power generation group

Measurement of Corrosive Gaseous Species from Staged Coal Combustion

Steven C. Kung

DOE 25th Annual Conference on Fossil Energy Materials

April 27, 2011

Objectives

- Better understand the formation of corrosive gases in the lower and upper furnace of advanced coal-fired utility boilers.
- Burn U.S. Coals in a pilot-scale testing facility under staged conditions.
- Design and perform online measurement of corrosive gaseous species.

© 2008 Babcock & Wilcox Power Generation Group, Inc. All rights reserved.

Pilot-Scale Combustion Facility with Variable Swirl Burner

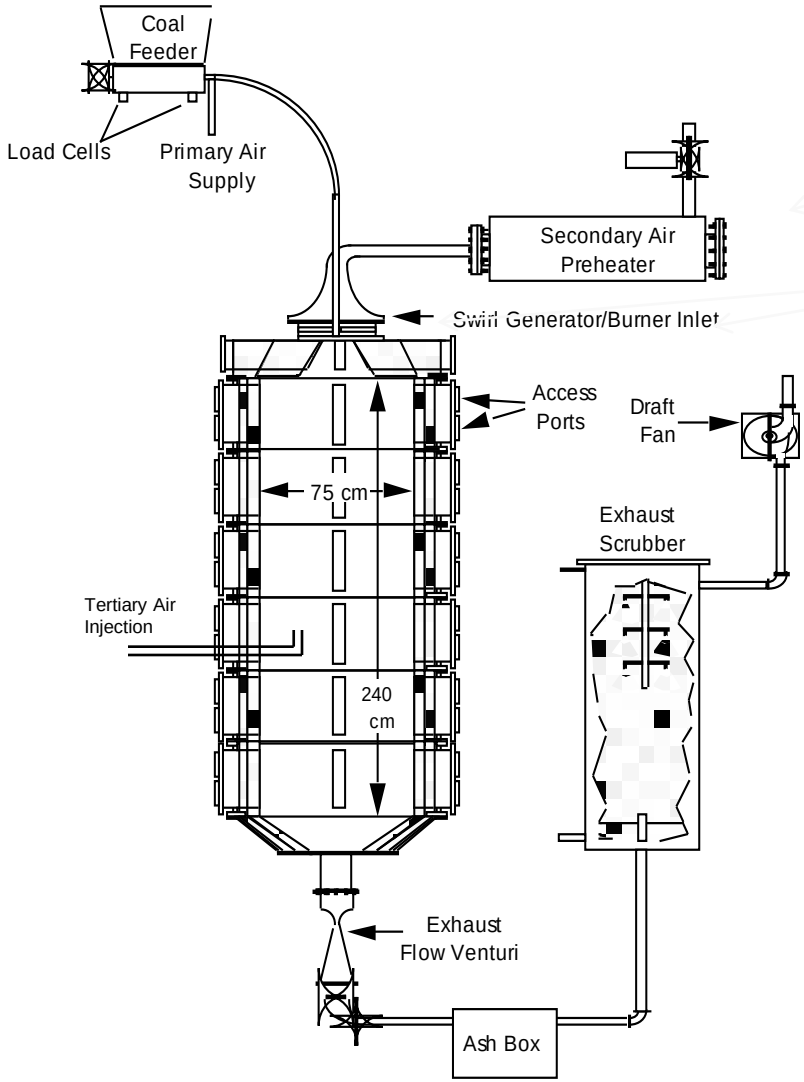

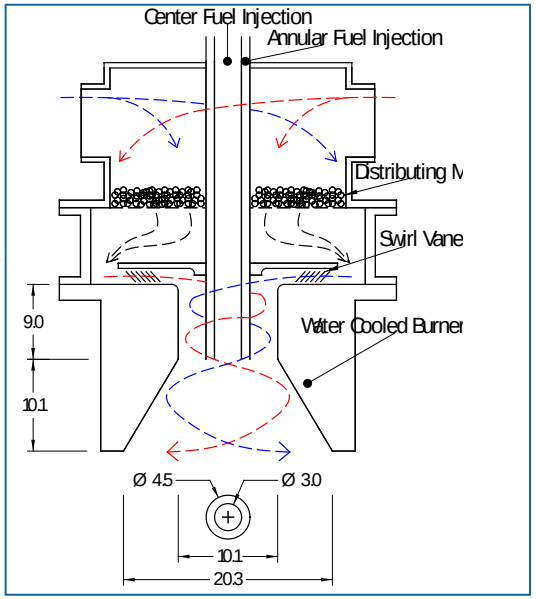

- **Down fired combustor**
- **Pulverized coal**
- **Variable swirl stabilized flame**
- **Staged air injection**

© 2008 Babcock & Wilcox Power Generation Group, Inc. All rights reserved.

Gas and Deposit Sampling

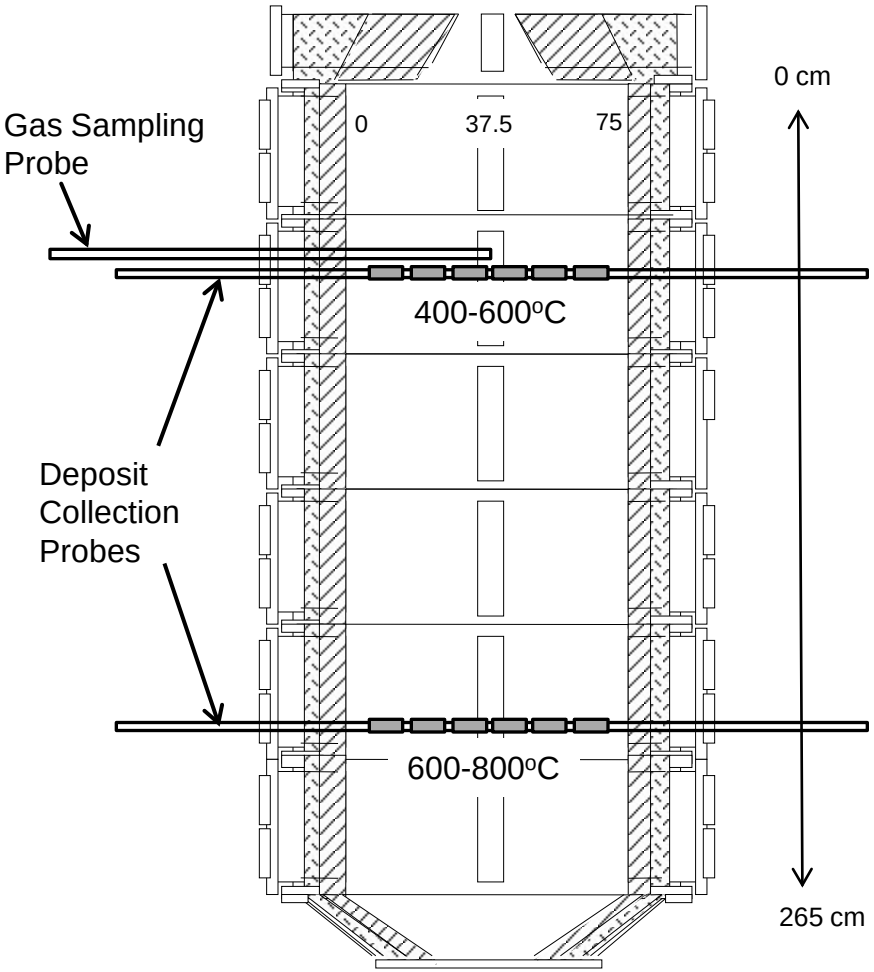

Staged Combustion

- S.R. = 0.85 in burner zone
- S.R. = 1.15 in burnout zone

Deposit Sampling

- Water-cooled in burner zone
- Air-cooled in oxidizing zone
- Half-sleeves with TC's on probes

Gas Sampling

- Water-cooled outer jacket
- Heated Inner tube (180ºC)
- Heated sampling line (180ºC) from furnace to analyzers

© 2008 Babcock & Wilcox Power Generation Group, Inc. All rights reserved.

Online Sampling Train for In-Furnace Gas Measurement

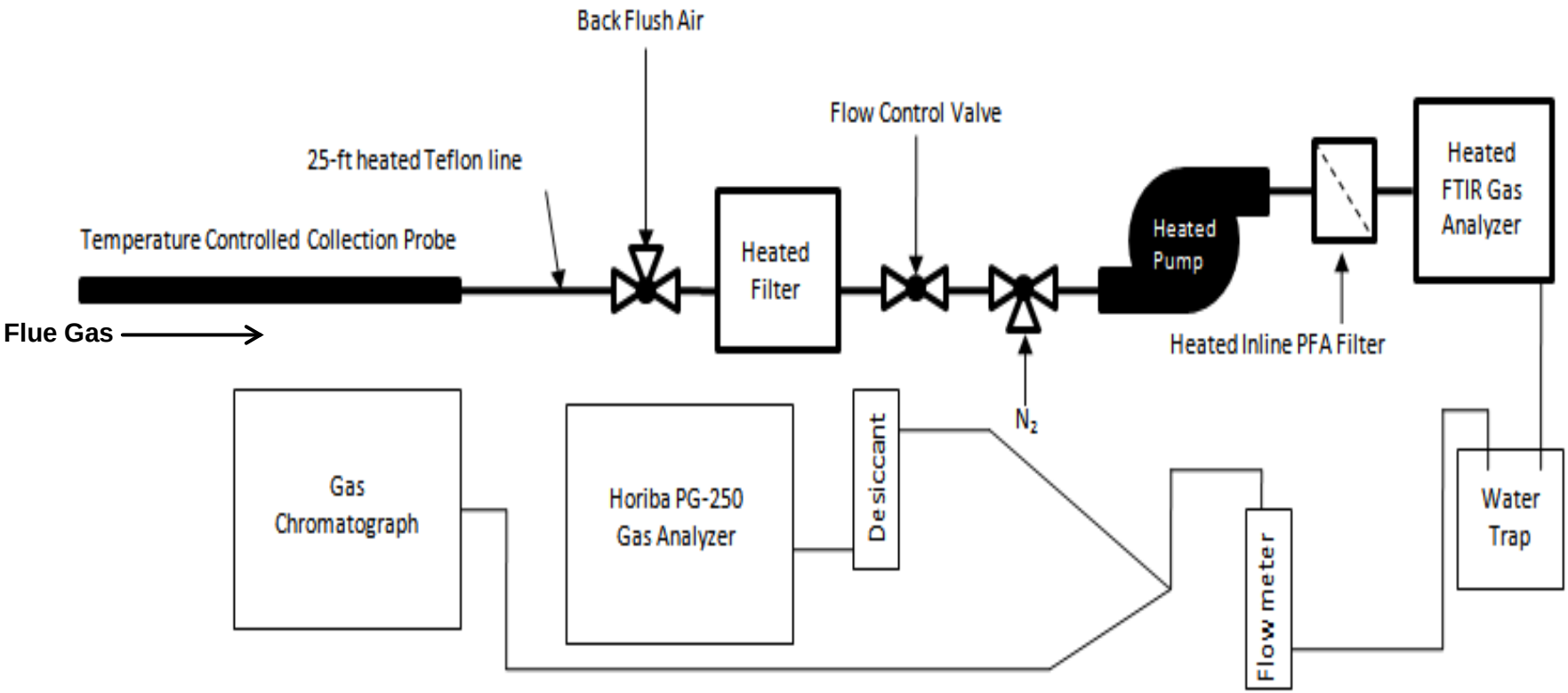

© 2008 Babcock & Wilcox Power Generation Group, Inc. All rights reserved.

© 2008 Babcock & Wilcox Power Generation Group, Inc. All rights reserved.

Chemistry of Nine U.S. Coals Studied

	ND B. Zap	WY PRB	IN #6 Gibson	OH Gating	IL#6-1 Galatia	IL #6-2 Galatia	KY #11	OH Mahoning	Pitt. #8
RANK	**Lignite**	**Sub-Bit.**	**hvCb Bit**	**hvBb Bit**	**hvBb Bit**	**hvBb Bit**	**hvBb Bit**	**hvAb Bit**	**mvAb Bit**
PROXIMATE ANALYSIS (ASTM D-5142), As Received (weight %)									
Moisture	27.33	24.59	7.25	3.77	5.40	3.68	3.39	2.22	1.05
Ash	8.66	5.14	7.20	11.34	8.65	10.45	8.46	9.92	10.45
Volatile Matter	33.77	37.00	30.87	40.73	35.68	33.70	36.97	40.79	18.61
Fixed Carbon	30.24	33.27	54.68	44.16	50.27	52.17	51.18	47.07	69.89
ULTIMATE ANALYSIS (ASTM D-5142 / 5373), As Received (weight %)									
Moisture	27.33	24.59	7.25	3.77	5.40	3.68	3.39	2.22	1.05
Hydrogen	2.03	2.55	4.02	4.07	3.74	3.14	4.34	4.18	3.86
Carbon	46.56	54.75	69.48	67.11	70.16	67.66	70.89	74.67	77.37
Nitrogen	0.86	0.83	1.36	0.94	1.04	0.95	1.23	0.93	1.44
Sulfur	0.67	0.25	1.14	4.31	2.69	2.96	3.64	1.96	1.03
Oxygen	13.89	11.89	9.55	8.46	8.32	11.16	8.05	6.12	4.80
Ash	8.66	5.14	7.20	11.34	8.65	10.45	8.46	9.92	10.45
Chloride*	0.001	0.001	0.212	0.039	0.389	0.283	0.206	0.199	0.0045
HEATING VALUE (ASTM D-5865), (Btu/lb)									
Heating Value	7,792	9,156	12,400	12,191	12,575	12,464	12,905	13,404	13,715

© 2008 Babcock & Wilcox Power Generation Group, Inc. All rights reserved.

Concentrations of CO and Sulfur-Containing Species

ND Beulah Zap Lignite, Burner Zone

Rad. (cm)	CO (ppm)	H_2S (ppm)	SO_2 (ppm)	SO_3 (ppm)	COS (ppm)	O_2 (%)
10	11617	54	781	12	20	2.89
20	39181	170	629	15	71	0.90
30	47406	571	298	13	108	0.96
40	42536	465	419	10	75	0.86
50	29380	98	666	19	45	1.26
60	6640	-107	719	18	21	3.01
70	1030	-91	668	19	11	3.36

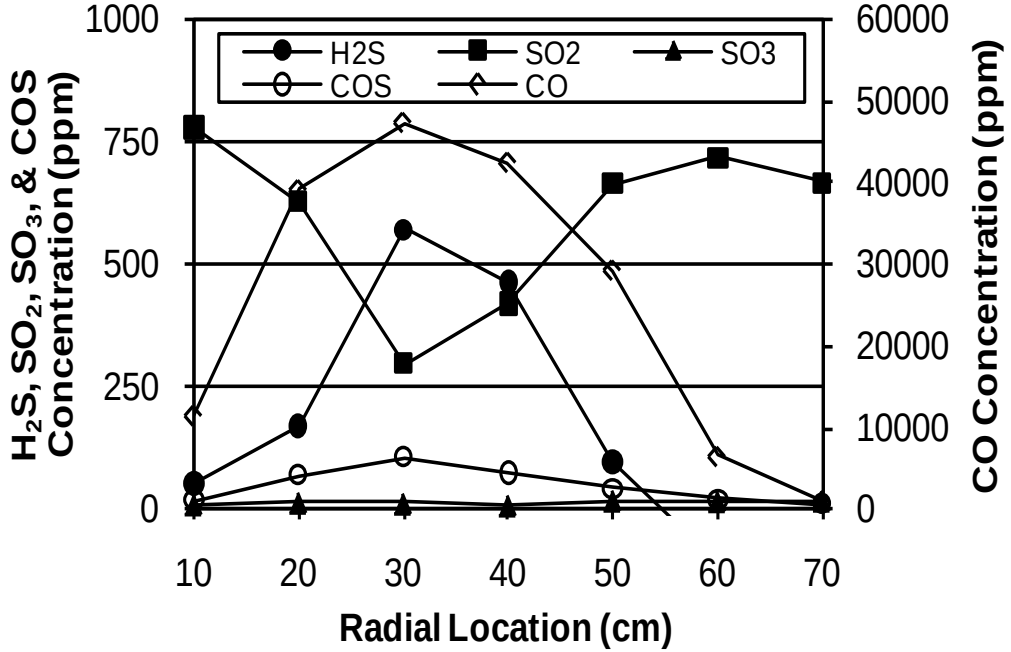

© 2008 Babcock & Wilcox Power Generation Group, Inc. All rights reserved.

Concentrations of Four Sulfur-Bearing Gaseous Species*

Burner Zone

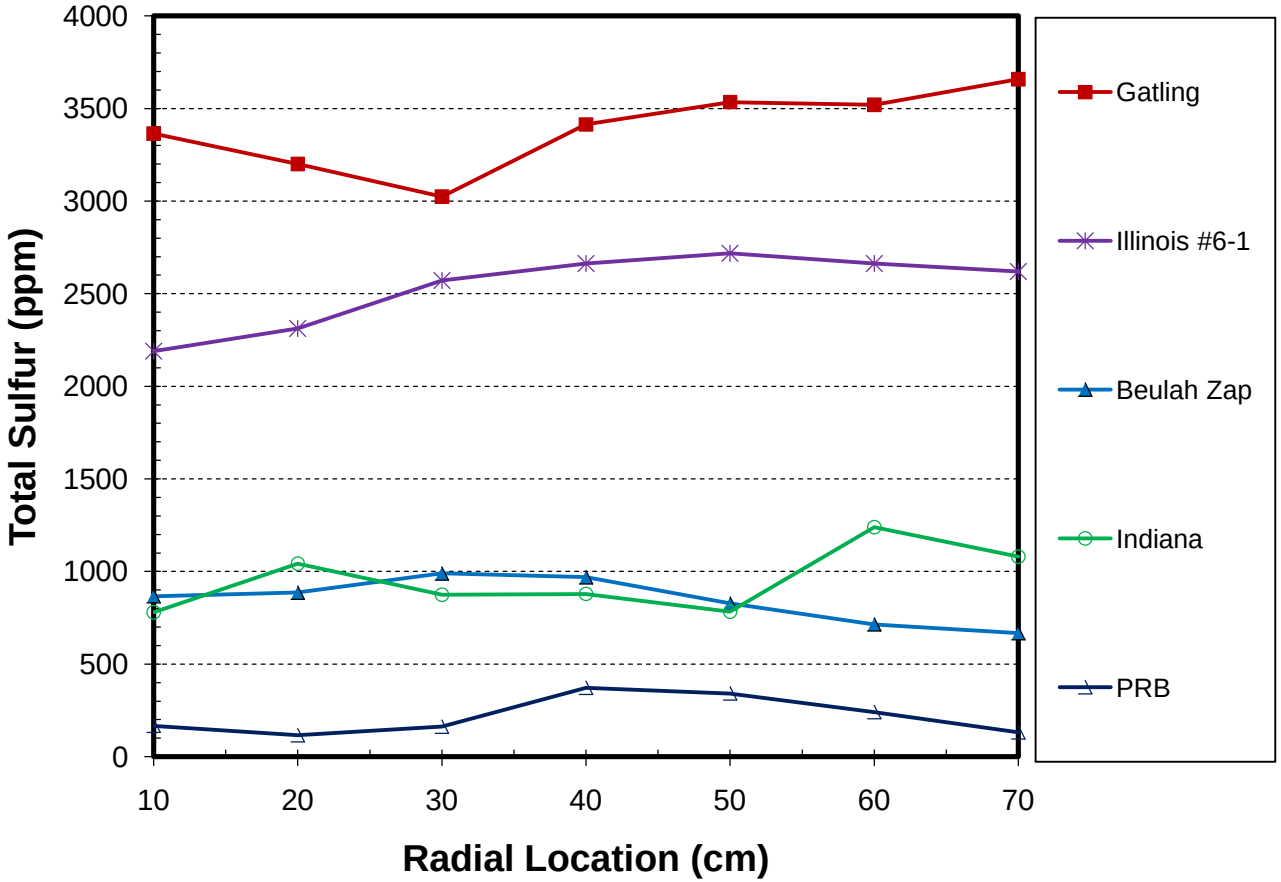

* Consist of H_2S, SO_2, SO_3, and COS (excluding S_2)

© 2008 Babcock & Wilcox Power Generation Group, Inc. All rights reserved.

Comparison of Measured and Calculated Sulfur Species

Burner Zone

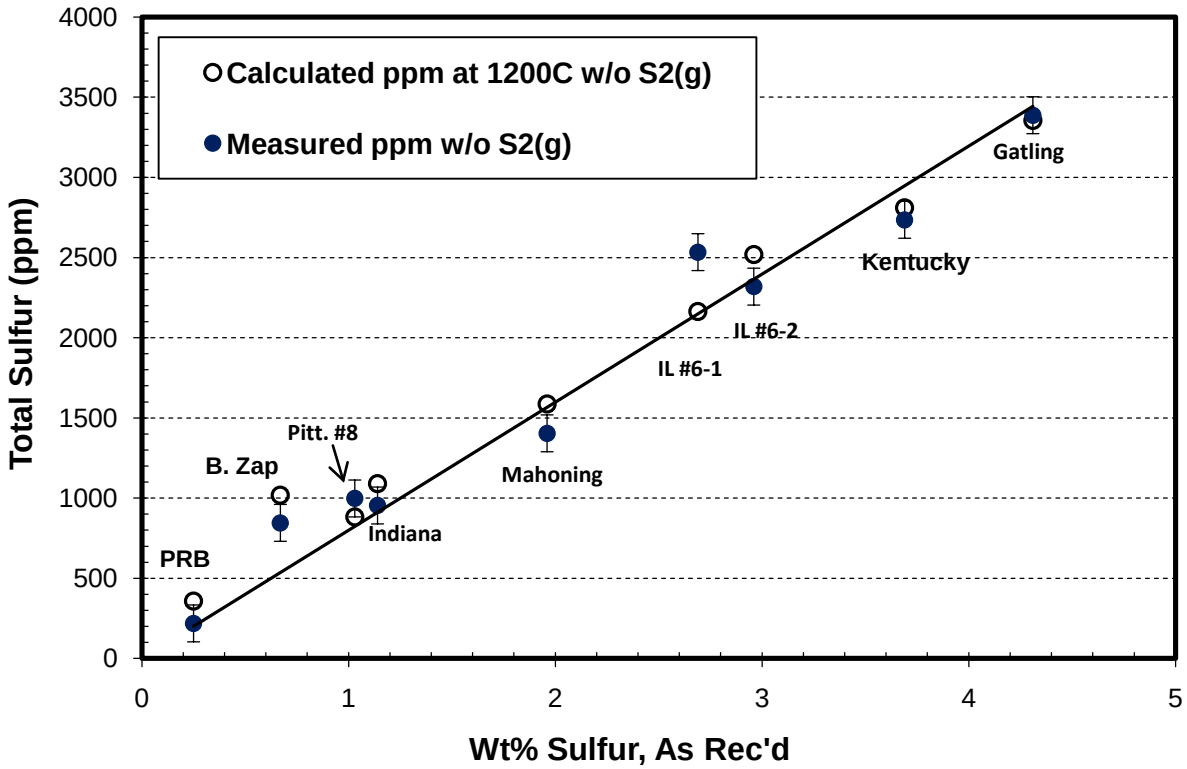

- Good agreement between measured and calculated total H_2S, SO_2, SO_3, and COS.
- Total S release (less S_2) to gas phase is proportional to total coal sulfur.

© 2008 Babcock & Wilcox Power Generation Group, Inc. All rights reserved.

Comparison of Measured and Calculated Sulfur Species

Burner Zone

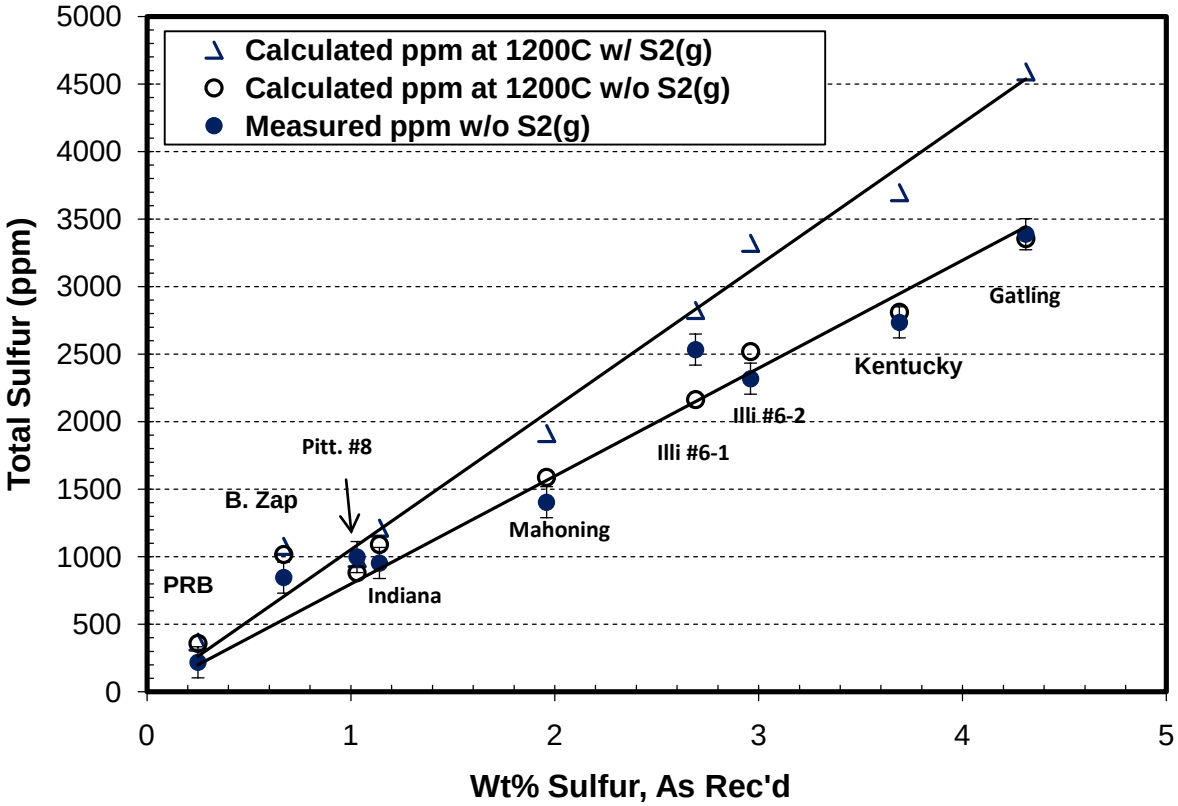

- ~24% sulfur is present as $S_2(g)$ in burner zone.
- Hot sulfidizing gases with high $P(S_2)$ can hit the walls where metal temperatures are low.

© 2008 Babcock & Wilcox Power Generation Group, Inc. All rights reserved.

Comparison of Measured and Calculated Gaseous Sulfur Species

Oxidizing Zone

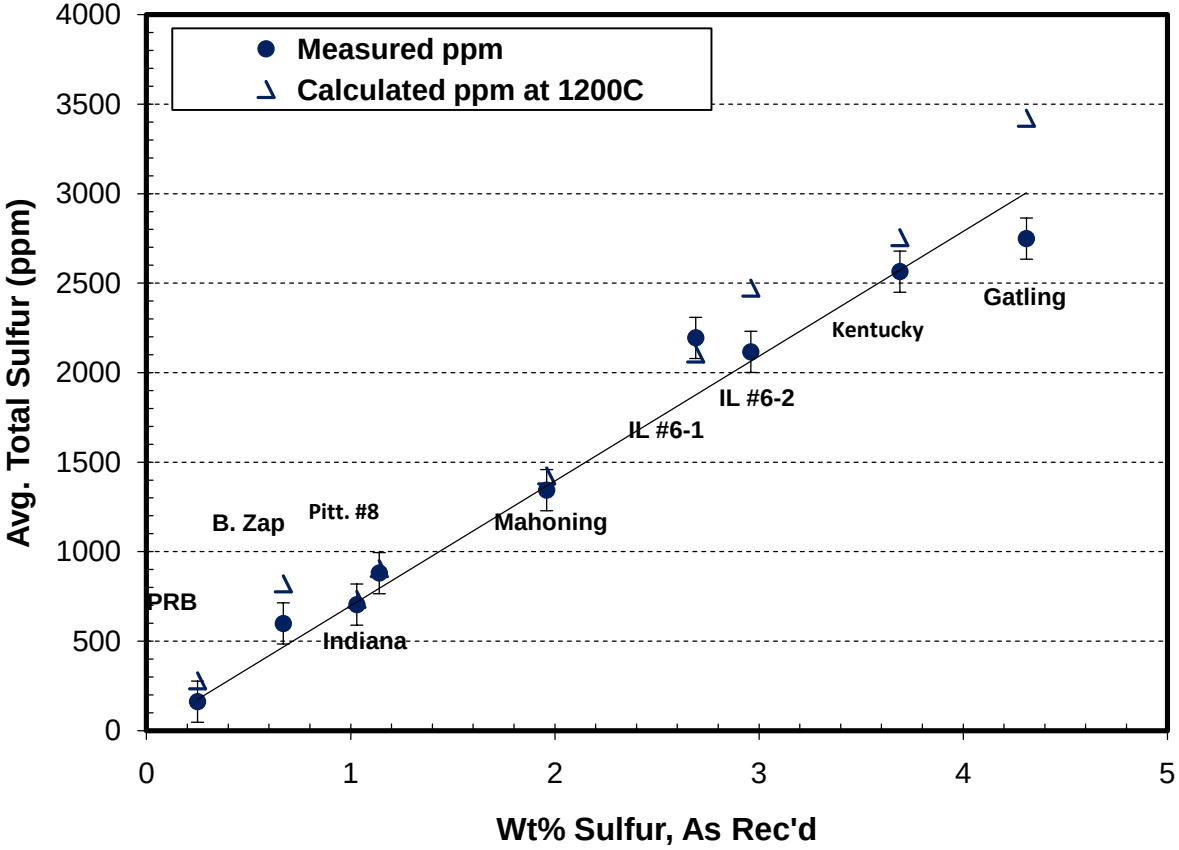

- Good agreement between measured and calculated total SO_2 and SO_3.
- Total S release to gas phase is again proportional to coal sulfur.

© 2008 Babcock & Wilcox Power Generation Group, Inc. All rights reserved.

Fe-S-O Phase Stability Diagram at 900ºF (482ºC)

Burner Zone

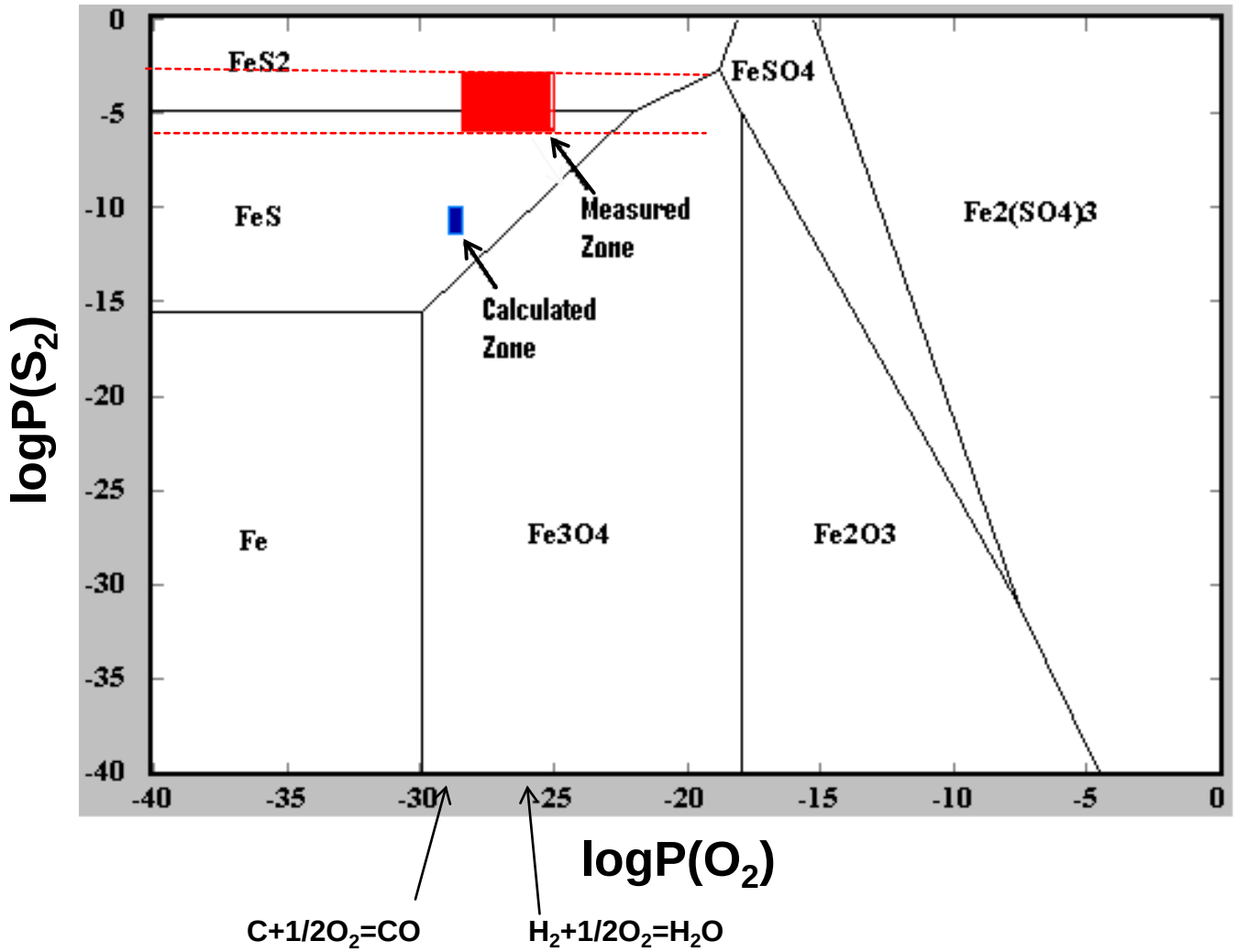

© 2008 Babcock & Wilcox Power Generation Group, Inc. All rights reserved.

Fe-S-O Phase Stability Diagram at 1100ºF (700ºC)

Oxidizing Zone

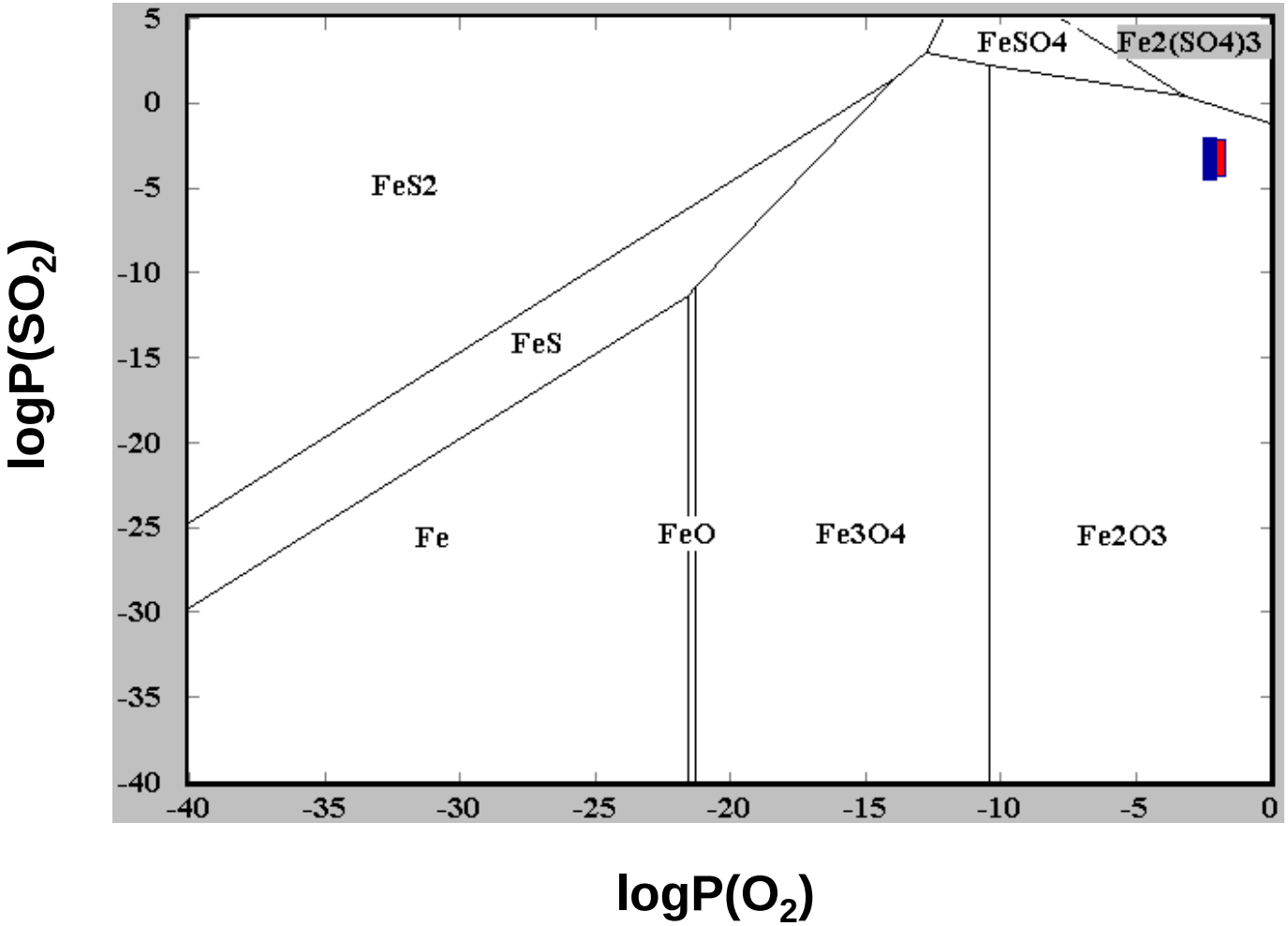

© 2008 Babcock & Wilcox Power Generation Group, Inc. All rights reserved.

Comparison of Measured and Calculated HCl Concentrations

Burner Zone

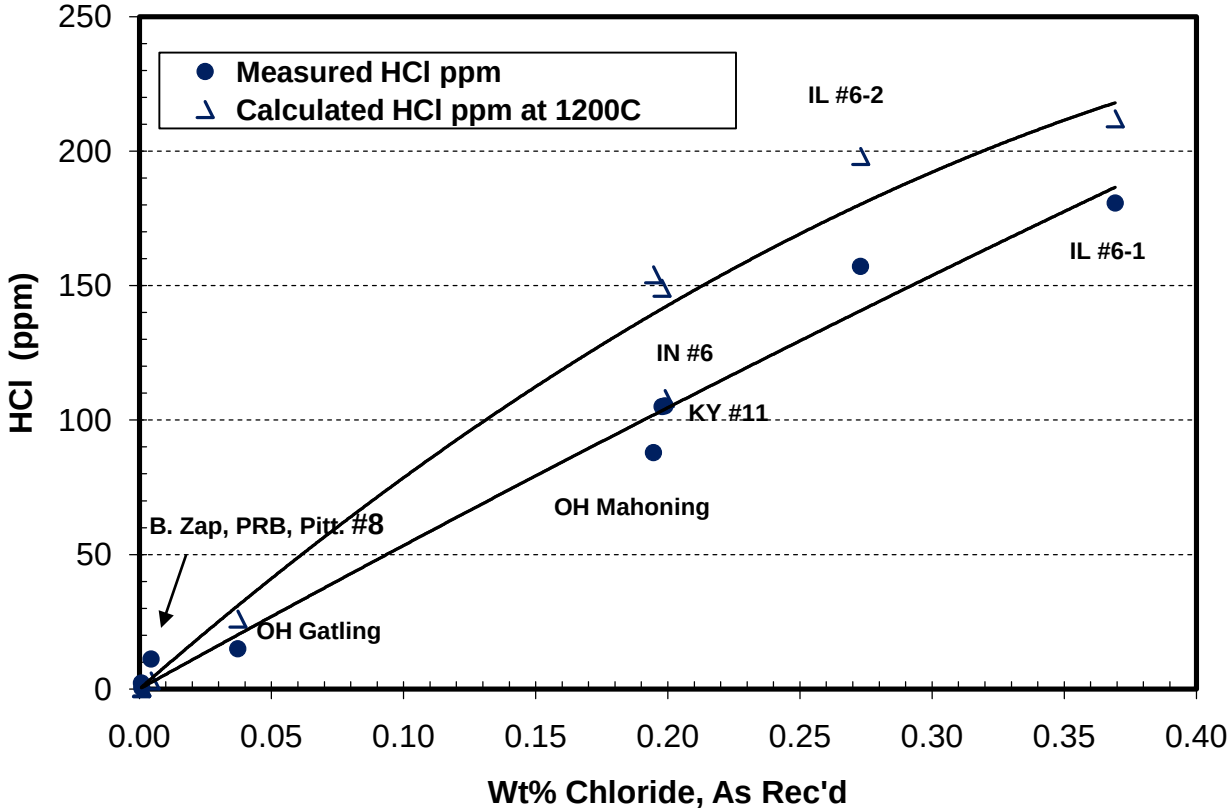

- ~80% chlorine is accounted for in burner zone as HCl(g).
- Cl release (to form HCl) is slower than sulfur release (to form (sulfur species).

© 2008 Babcock & Wilcox Power Generation Group, Inc. All rights reserved.

Comparison of Measured and Calculated HCl Concentrations

Oxidizing Zone

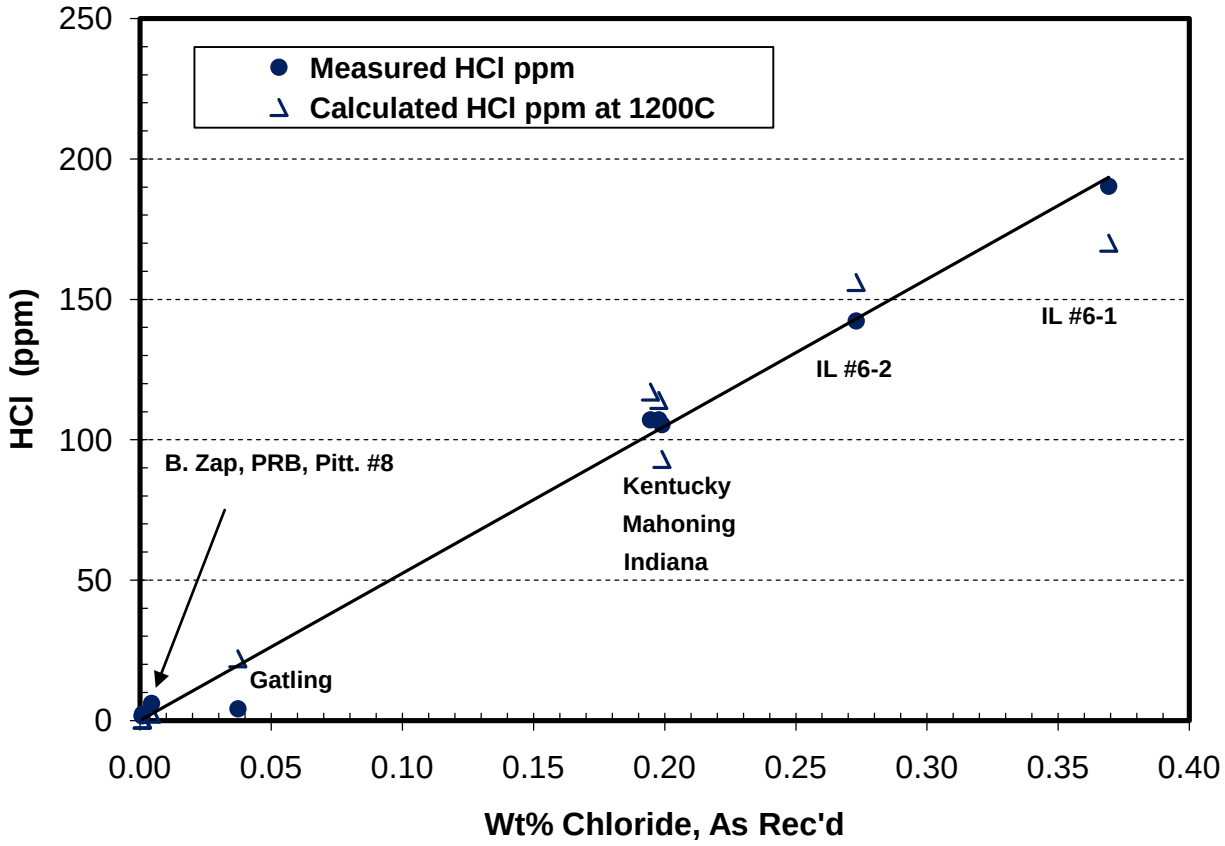

- **Chlorine is fully released to form HCl in oxidizing zone.**

© 2008 Babcock & Wilcox Power Generation Group, Inc. All rights reserved.

Na-Cl-O Phase Stability Diagram at 900ºF (482ºC)

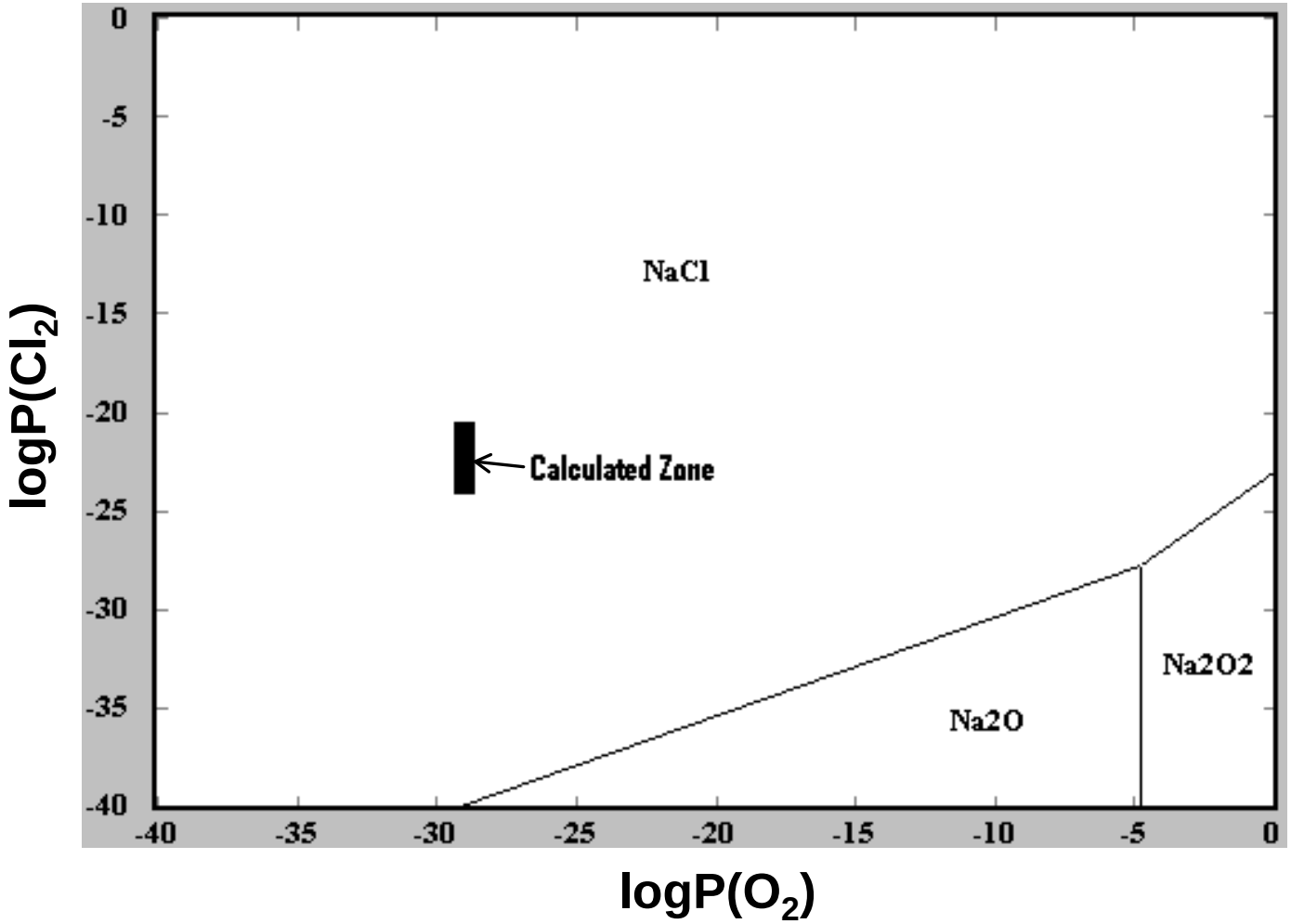

© 2008 Babcock & Wilcox Power Generation Group, Inc. All rights reserved.

Summary

- Coexistence of reducing and oxidizing gaseous species. → non-equilibrium
- Coal sulfur is released quickly to form gaseous species in burner zone. → independent of sulfur forms in coal
- Total gaseous sulfur released is linearly proportional to coal sulfur.
- Coal chlorine is released slower than coal sulfur in burner zone but is fully converted to HCl in oxidizing zone.
- Amount of HCl is also linearly proportional to coal chlorine under both reducing and oxidizing conditions.

© 2008 Babcock & Wilcox Power Generation Group, Inc. All rights reserved.

Acknowledgement

- Work supported by U.S. Department of Energy and Babcock & Wilcox.
- DOE Project number: DE-FC26-07NT43097
- NETL project managers: Vito Cedro
  Patricia Rawls

© 2008 Babcock & Wilcox Power Generation Group, Inc. All rights reserved.