Numerical and Experimental Study of Mixing Processes Associated with Hydrogen and High Hydrogen Content Fuels

Amin Akbari, Scott Hill, Patrick Randall, and Vincent McDonell

UCI Combustion Laboratory

UCIrvine | University of California

October 19, 2010

Mark Freeman and Richard Dennis

Outline

- **Motivation**
- **Project Goals**
- **Progress to Date**
  - **Experimental Study**
  - **Numerical Study**
- **Next Steps**

Gas Turbine Need

- **Lean premixed technology is critical for DLN combustion performance**

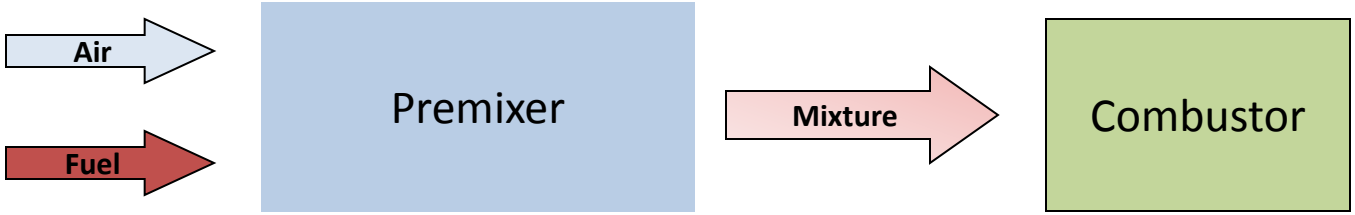

jet in cross flow

spokes, vanes

Mixture Character is critical for low emissions (and operability)

- **Use of high hydrogen fuels**
  - **Very low fuel/oxidizer density ratios**
  - **High diffusivity**

- **Application of CFD and other design tools for premixer?**

UCI Combustion Laboratory
University of California · Irvine

Motivation

- **Common simulation techniques for standard fuels valid for hydrogen?**
  - **Need "fast turnaround" for design screening**
- **Accurate and reliable measurement and simulation techniques need to be established**
- **Experimental data for the validation of simulation techniques is critical**

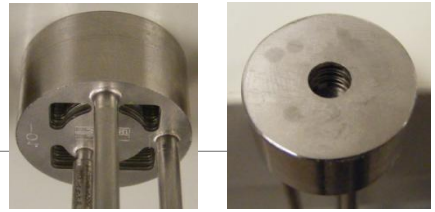

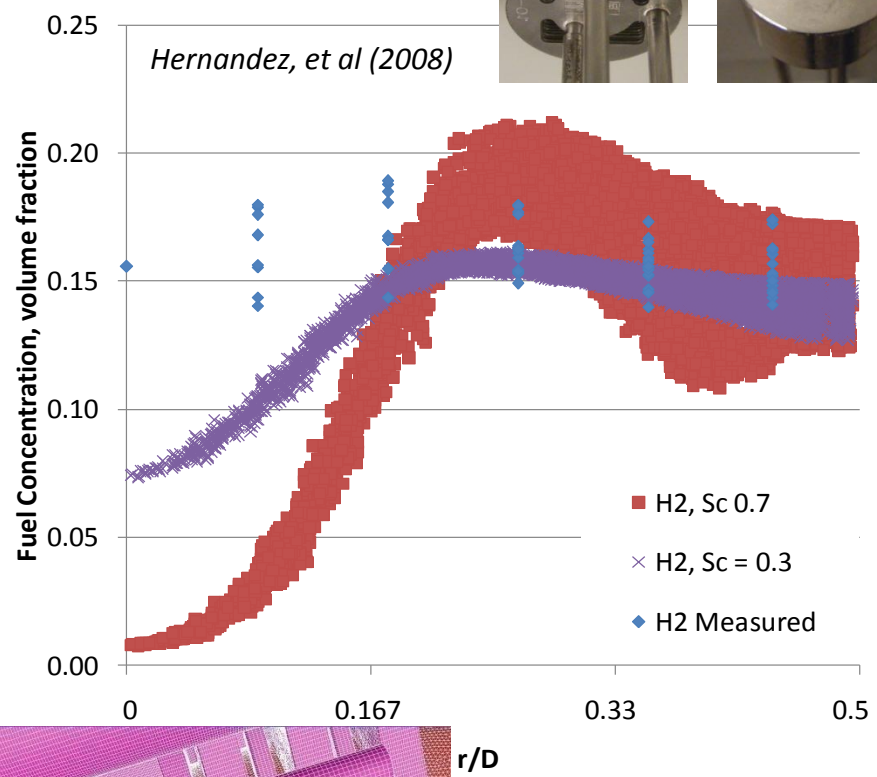

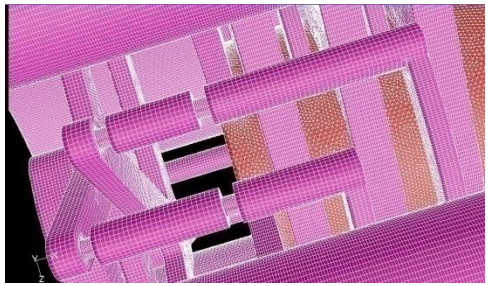

←5-7 million quad/tet cells

UCI Combustion Laboratory
University of California · Irvine

Project Goals

- **Experimental Study**
  - **Capture instantaneous and time averaged fuel distribution downstream of fuel injection in well defined geometries**
    - Establish and apply reliable, accurate measurements

- **Numerical Study**
  - **Evaluate effectiveness of computation fluid dynamics (CFD) to represent mixing of hydrogen and high hydrogen content fuels in representative gas turbine premixer geometries**
    - Role of modeling approach and coefficients on the overall accuracy, efficiency, and reliability
  - **Look for trends relative to strategies giving best agreement with experiments**

- **Capture the synergy of parallel experimental/numerical work**

Tasks

1. **Project Management**

2. **Experimental Studies**
   - **2.1 Module Development**
   - **2.2 Diagnostics Evaluation/Selection**
   - **2.3 Detailed Data Acquisition**
   - **2.4 Analysis**

3. **Numerical Studies**

Tasks

Schedule

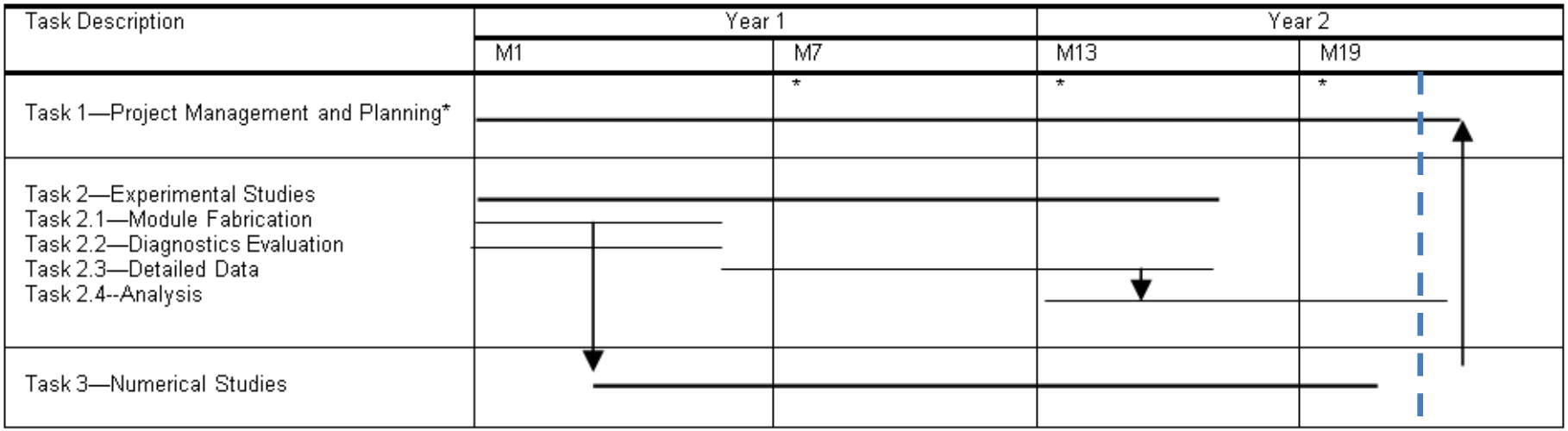

* Reports will be submitted as required and paper presented at annual Contractor's Review Meeting, Final two months of project will be used for preparation of Final Report

Start Date: 1 Oct 2008 contract, 1 Jan 2009 technical start

Target completion date: 31 Dec 2010

UCI Combustion Laboratory
University of California · Irvine

Task 2 Results

2. **Experimental Studies**
   - **2.1 Module Development**
     includes Matrix Development
   - **2.2 Diagnostics Evaluation/Selection**
   - **2.3 Detailed Data Acquisition**
   - **2.4 Analysis**

Task 2.1 Module Development

Leverage Previous Hardware

- **35kW axisymmetric combustor**
- **Modular in Design**
- **Parameters that can be varied:**
  - **Fuel Injection Type**
  - **Fuel Injection Rate**
  - **Fuel Composition**
  - **Air Flow Rate**
  - **Injection Height**
  - **Flow Swirl**
  - **Flow Turbulence**
  - **Quarl Contraction**

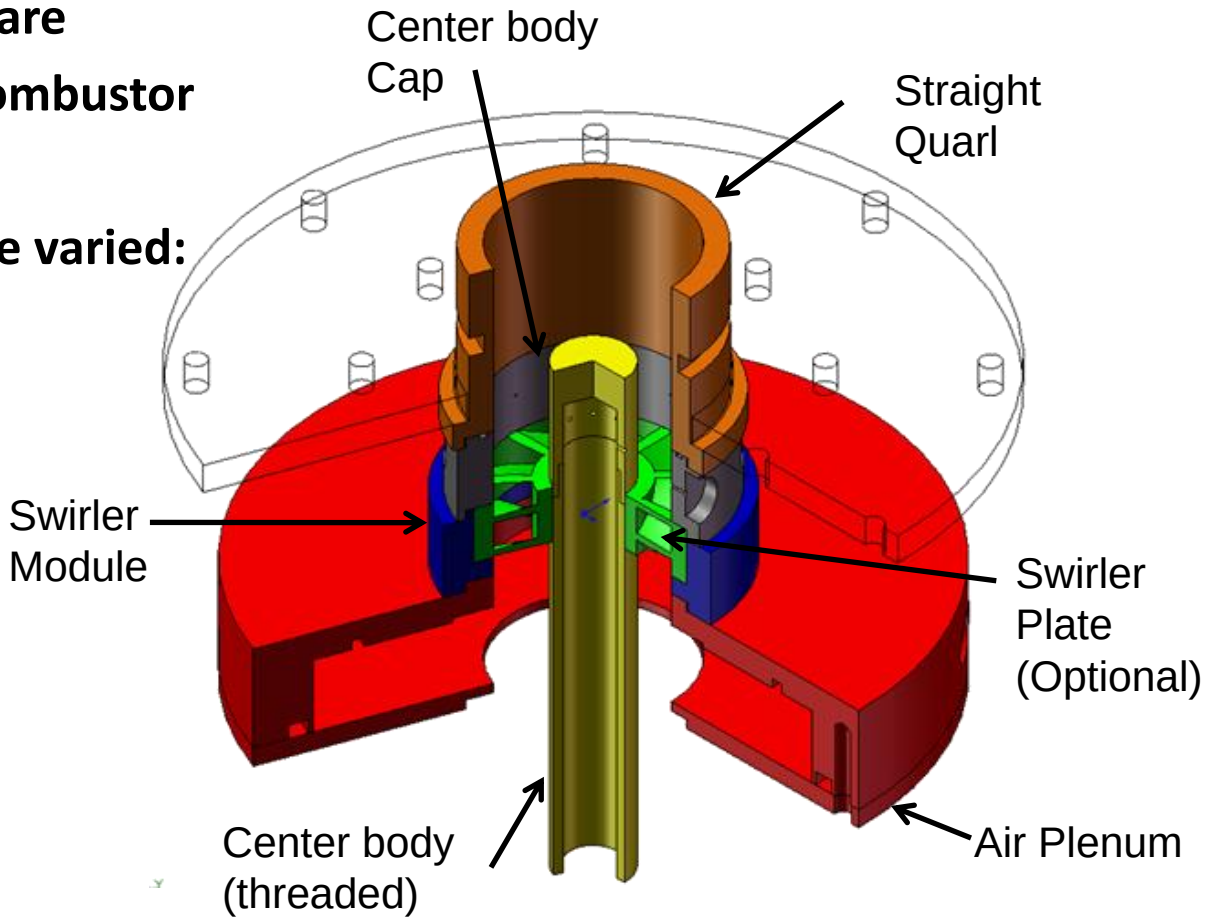

UCI Combustion Laboratory
University of California · Irvine

Task 2.1 Matrix Development

Experimental Test Matrix Development

- **D-Optimal Statistical Design Option**
  - **Fixed**
    - Air pressure drop (4%)
  - **2 categoric factors**
    - Swirl (0 or 45)
    - Injection (radial or axial)
  - **1 numeric factor**
    - Fuel/Air Momentum
  - **Fuel Components**
    - H2/CH4, mixtures
  - **3 axial planes + CL traverse**
  - **Time Avg and Inst. Measurements**
- **70+ cases**

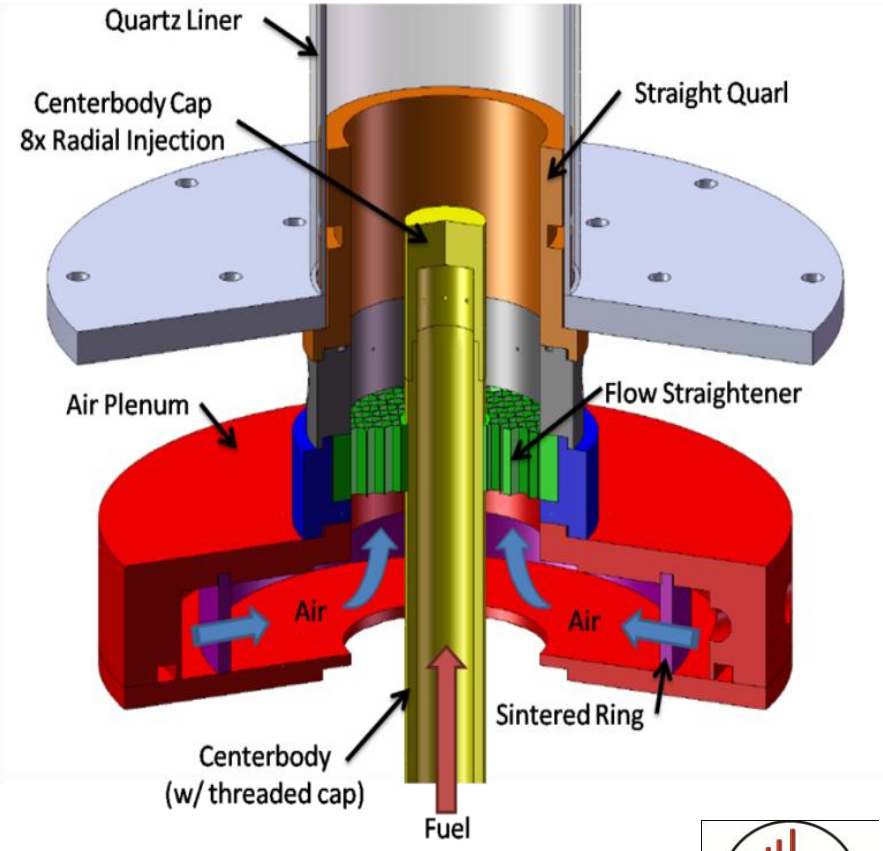

UCI Combustion Laboratory
University of California · Irvine

Task 2.1 Matrix Development

- **Focus on 4 configurations for present analysis**
  - **H2, axial, no swirl**
  - **H2, radial, no swirl**
  - **CH4, axial, no swirl**
  - **CH4, radial, no swirl**

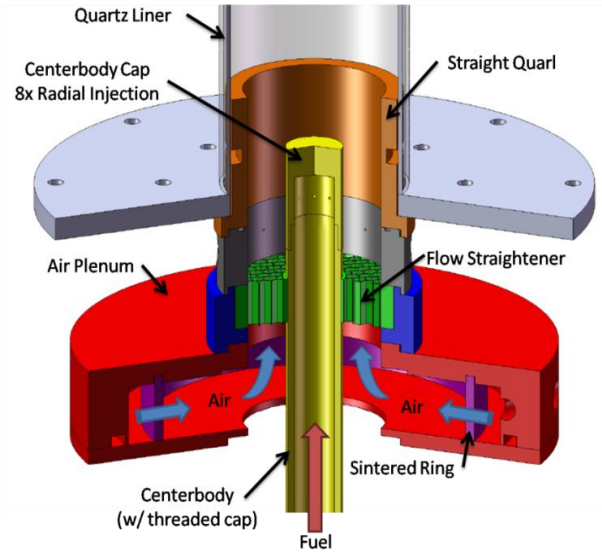

- **Cases done but finishing analysis**
  - **H2, axial, swirl**
  - **H2, radial, swirl**
  - **CH4, axial, swirl**
  - **CH4, radial, swirl**
  - **Mixture, axial, swirl**
  - **Mixture, radial, swirl**

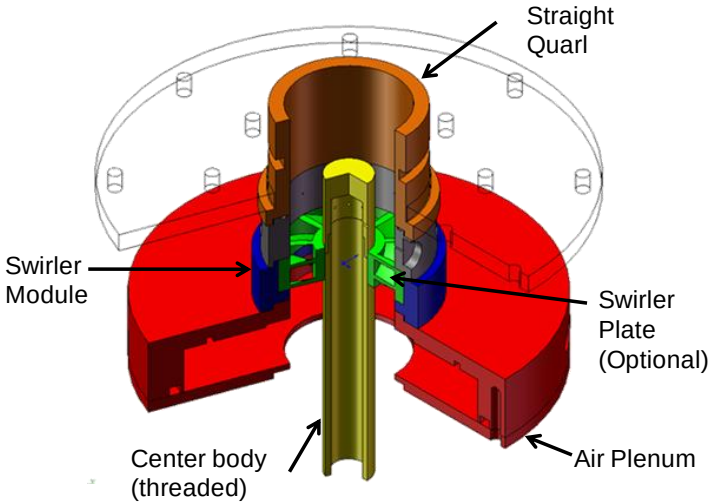

UCI Combustion Laboratory
University of California · Irvine

Task 2.2 Diagnostics

- **Concentration**
  - **PLIF (after observations about role of momentum flux ratio)**
    - Instantaneous and Average
  - **Microprobe**
    - Time average

- **Velocity**
  - **DPIV**
    - Instantaneous and Average
  - **Pitot-Probe**
    - Time average

Task 2.2 Diagnostics

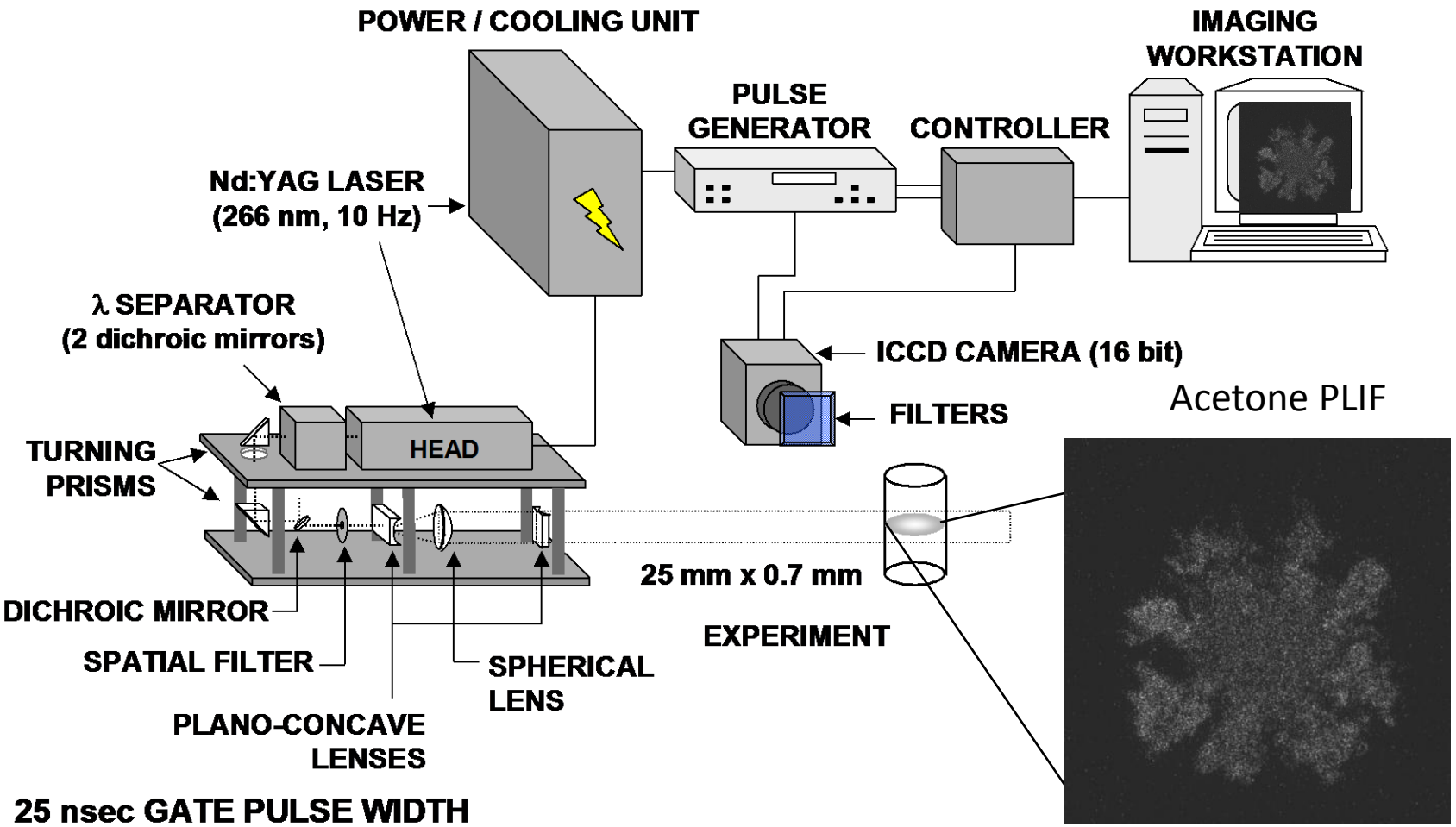

25 nsec GATE PULSE WIDTH

TIME RESOLVED→MEAN + HIGHER MOMENTS

UCI COMBUSTION LABORATORY
UNIVERSITY of CALIFORNIA · IRVINE

Task 2.2 Diagnostics

- **Schematic of experimental setup for isokinetic needle probe**
  - **Gas chromatograph (Agilent MicroGC)—hydrogen/mixtures**
  - **Flame Ionization Detector (Horiba FIA)--methane**

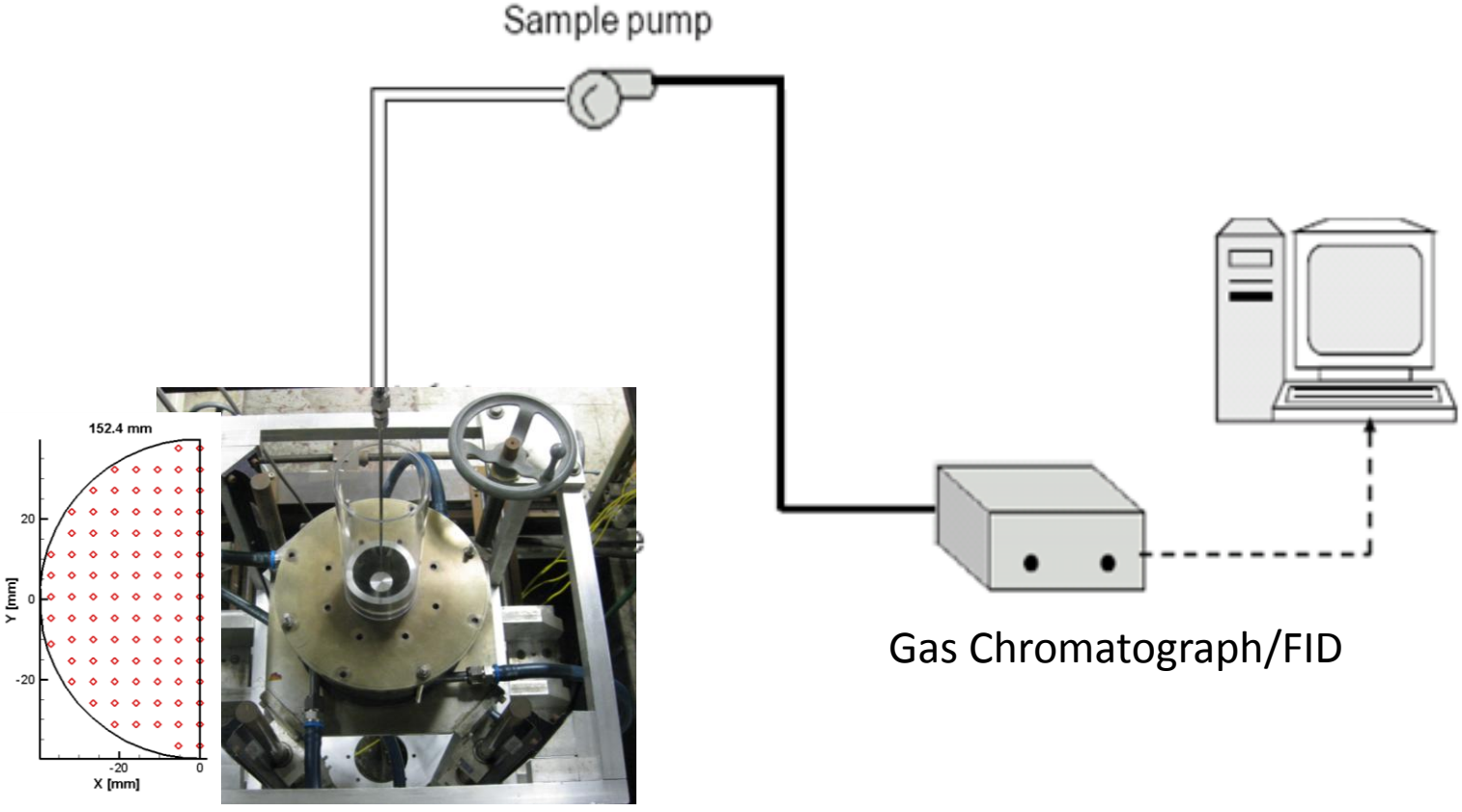

UCI Combustion Laboratory
University of California · Irvine

Task 2.2 Diagnostics

- **Particle Image Velocimetry (PIV)-LaVision**

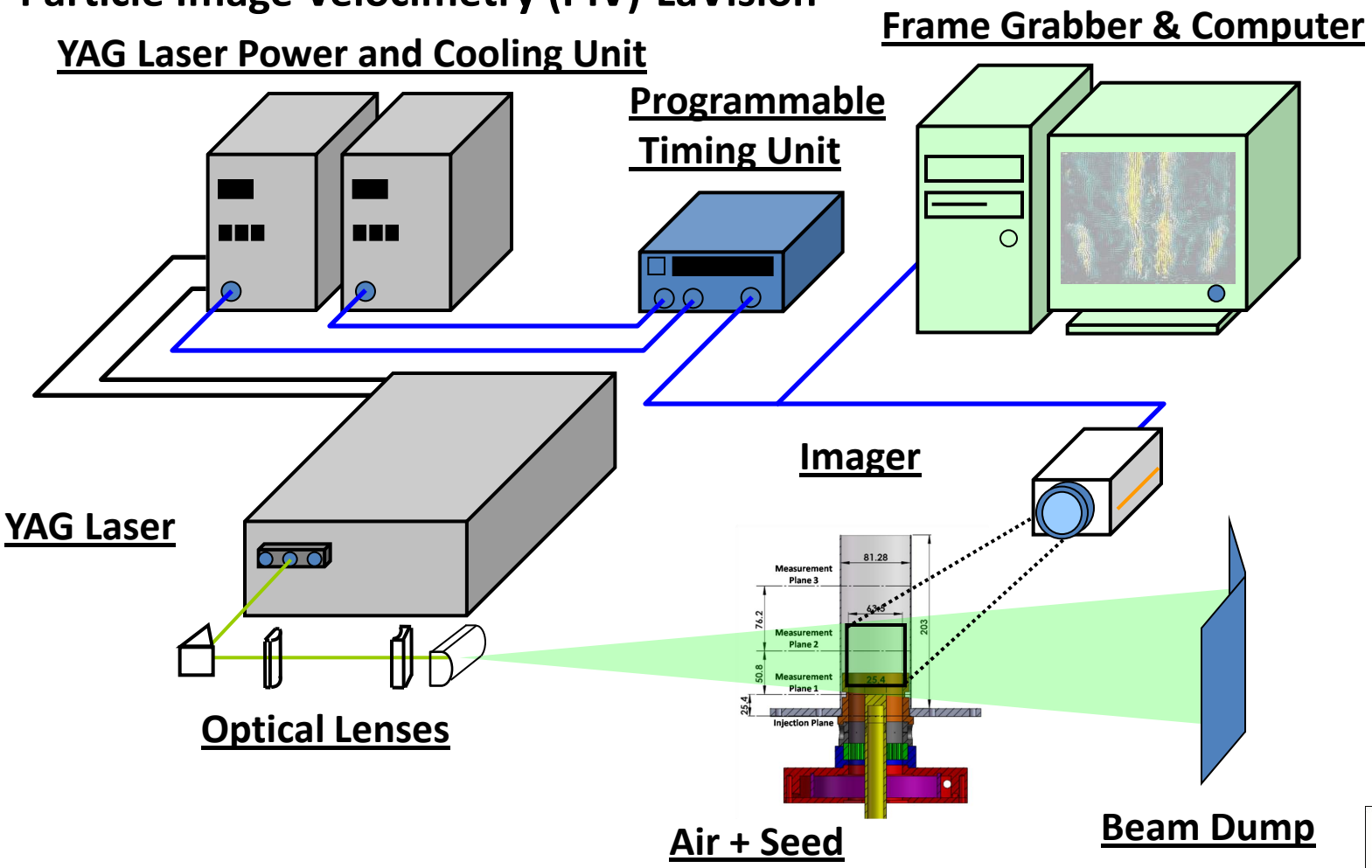

UCI Combustion Laboratory
University of California · Irvine

Balance of Task 2

- **Task 2.3—Data collection—90% complete**
- **Task 2.4—Analysis—underway**
- **Will present results in combination with numerical studies**

Task 3.0 Numerical Studies

Approach

- **Computation Fluid Dynamics (CFD) simulations using Fluent**
  - **Common commercial code with collection of models/methods available**

- **Three major models being evaluated along with key "constants"—emphasis on "near term" tools**
  - **RANS/k-ε model**
  - **RANS/Reynolds Stress Model (RSM)**
  - **URANS**
  - **Large Eddy Simulation**

- **Objectives Include:**
  - **Finding model coefficients for each modeling strategy to provide accurate predictions of real flows**
  - **Identifying the strengths and weaknesses of the modeling techniques relative to major flow conditions such as the swirl level**

Task 3.0 Numerical Studies

- **Mass conservation**

$$\frac{\partial \rho}{\partial t} + \frac{\partial(\rho u_i)}{\partial x_i} = 0$$

- **Momentum conservation**

$$\frac{\partial(\rho u_i)}{\partial t} + \frac{\partial(\rho u_j u_i)}{\partial x_j} = \frac{\partial \tau_{ij}}{\partial x_j} - \frac{\partial p}{\partial x_i}$$

- **Species conservation**

$$\frac{\partial c}{\partial t} + U \cdot \nabla c = D \nabla^2 c + r$$

Reynolds Decomposition

$$u_i = \overline{u_i} + u_i'$$

$$c_i = \overline{c_i} + c_i'$$

UCI Combustion Laboratory
University of California · Irvine

Task 3.0 Numerical Studies

- **RANS: Time-averaged governing equations**

$$\frac{\partial\left(\rho\bar{u}_i\right)}{\partial x_i}=0$$

$$\frac{\partial\left(\rho\bar{u}_i\right)}{\partial t}+\frac{\partial}{\partial x_j}\left(\rho\bar{u}_i\bar{u}_j+\rho\overline{u_i'u_j'}\right)=-\frac{\partial\bar{p}}{\partial x_i}+\frac{\partial\bar{\tau}_{ij}}{\partial x_j}$$

$$\frac{\partial\left(\rho\bar{c}\right)}{\partial t}+\frac{\partial}{\partial x_j}\left(\rho\bar{u}_j\bar{c}+\rho\overline{u_j'c'}\right)=\frac{\partial}{\partial x_j}\left(D\frac{\partial\bar{c}}{\partial x_j}\right)$$

Reynolds Stress

Turbulent scalar flux

UCI Combustion Laboratory
University of California · Irvine

Task 3.0 Numerical Studies

- **Need to Model Terms introduced by decomposition**
  - **Eddy viscosity model for the Reynolds stress**

$$-\rho\overline{u_i'u_j'} = \mu_t\left(\frac{\partial\overline{u_i}}{\partial x_j} + \frac{\partial\overline{u_j}}{\partial x_i}\right) - \frac{2}{3}\rho\delta_{ij}k$$

  - **Eddy diffusion model for the turbulent scalar flux**

$$-\rho\overline{u_j'c'} = D_t\frac{\partial\overline{c}}{\partial x_j}$$

μ_t D_t

Turbulent viscosity;

Turbulent diffusion coefficient

UCI Combustion Laboratory
University of California · Irvine

Task 3.0 Numerical Studies

- **Turbulent species transport: Schmidt number**

$$Sc_t = \frac{\mu_t}{D_t} \qquad \text{Eq.10}$$

Sc_t is treaded as a constant usually ranging from 0.2~1

$$D_t = \frac{\mu_t}{Sc_t} \qquad \text{Eq.11}$$

Turbulent Sc number is a "constant" which has a significant impact on the turbulent mixing modeling with RANS approach.

Lower values will increase apparent dispersion.

UCI Combustion Laboratory
University of California · Irvine

Task 3.0 Numerical Studies

Summary of High Level Model Features

- **k-ε model (2 equation model)**
  - **Time averaged approach**
  - **Most widely used, "common" for design screening**
  - **Strengths: Simple, non computer intensive, can provide "good" results**
  - **Weaknesses: not suitable for complex flow conditions**
  - **X computational effort**

- **Reynolds Stress Method (7 equation model)**
  - **Time averaged approach**
  - **Less commonly used**
  - **Strengths: "More accurate" than k-ε, can, in principle, deal with more complex flow conditions and parameters**
  - **Weaknesses: Computer intensive, coupling of equations, convergence issues**
  - **~5X computational effort**

Task 3.0 Numerical Studies

Summary of High Level Model Features

- **Large Eddy Simulations**
  - State of the art modeling technique
  - Key idea is to solve "large scales" directly and model very fine scale eddies where isotropy is a more valid assumption
  - No averaging over most of the turbulence scales
  - Strengths: Transients modeled, high accuracy, no loss of information due to time averaging
  - Weaknesses: Requires very fine meshes, computer and time intensive for solutions
  - ~600X Computational Effort

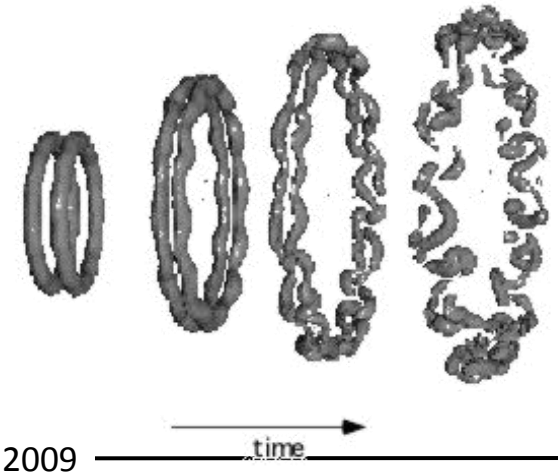

UCI Combustion Laboratory
University of California · Irvine

Task 3.0 Numerical Studies

- Solidworks→Gambit→Mesh
- Fluent 6.3 solver
- Solution Platform
  - 8 node Beowulf Cluster
  - 1MB Cache/CPU
  - 4GB RAM/node
  - AMD Opteron
    2.6GHz CPUs
  - Redhat LINUX
    64 bit OS
    GigE Nortel switch

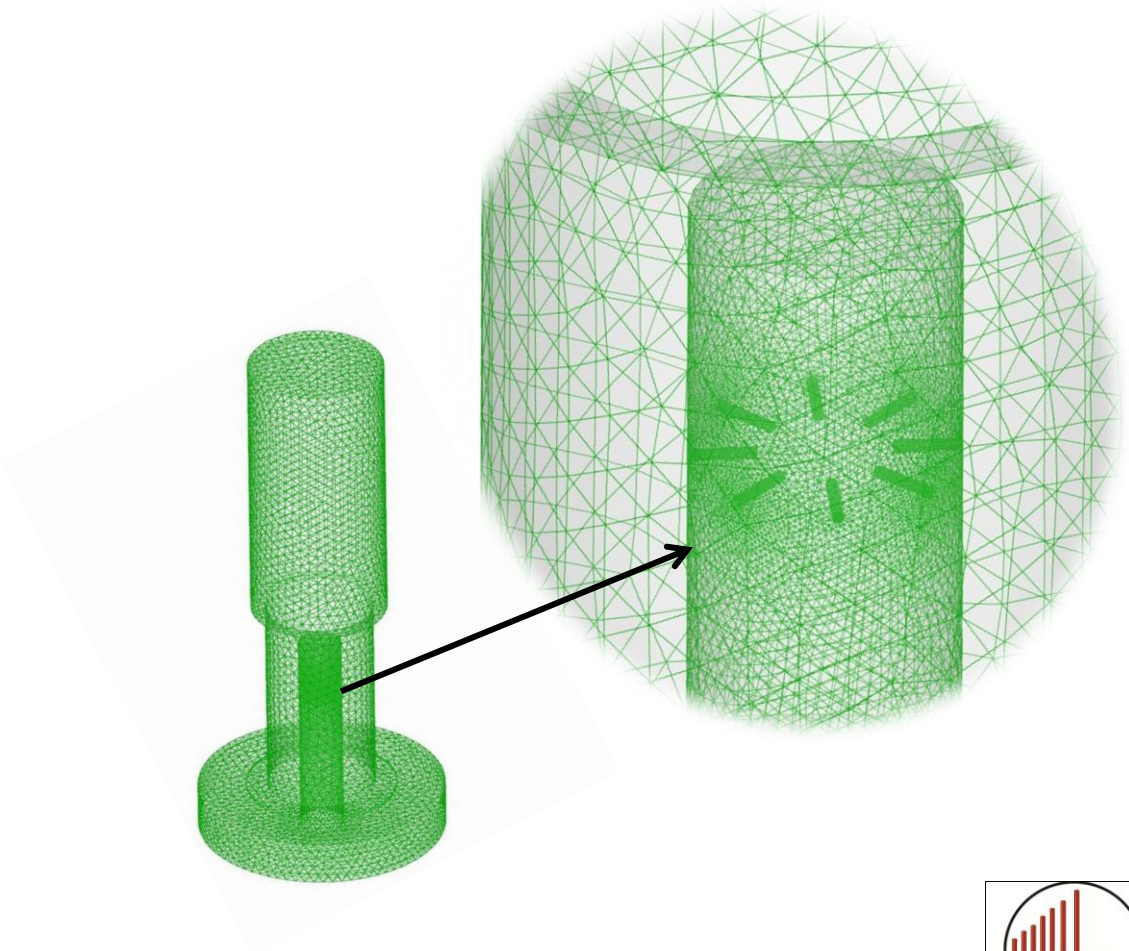

UCI Combustion Laboratory
University of California · Irvine

Task 3.0 Numerical Studies

- **Grid Treatment**
  - ~~**Quarter Symmetry**~~
  - ~~**Full 3D structured**~~
  - **Full 3D unstructured**
    - Refinement about fuel jets, walls to match treatments
    - Grid optimized for each simulation approach (grid independence study)
    - ~100,000 → >3M cells depending on treatment
- **Turbulence Treatments**
  - **RANS**
    - Realizable k-ε (best suited for jets) , RSM
  - **Unsteady RANS**
  - **LES (10 μs step, 5 residence times, 0.3 sec flow time)**
- **Turbulent Schmidt # (μ_t / $\mathcal{D}_t$)**
  - **0.2 to 0.7**

UCI Combustion Laboratory
University of California · Irvine

Task 2.3/3.0 Conditions

- **Non-swirling, radial and axial jet cases**

Injection Type and #	Axially at Centerline 1.19 mm diameter Radially Outward 1.19 mm diameter, 8x	
Jet Spacing (Radial)	9.97 mm (45° on 25.4 mm diameter centerbody)	
Quarl Module	Straight Barrel, No Contraction	
Injection Height	50.4 mm Below Top of Quarl	
Flow Swirl	None: Flow Straightener Used	
Case	CH_4 into Air	H_2 into N_2
--Air	1.116 kg/min	--
--Nitrogen	--	1.116 kg/min
--Methane*	.00864 kg/min	--
--Hydrogen*	--	0.00301 kg/min

*Flows set to match momentum flux ratio $J = \frac{\rho_j U_j^2}{\rho_c U_c^2}$

UCI Combustion Laboratory
University of California · Irvine

Task 2.3 Measurement Locations/Results

- **Radial jet Injection**

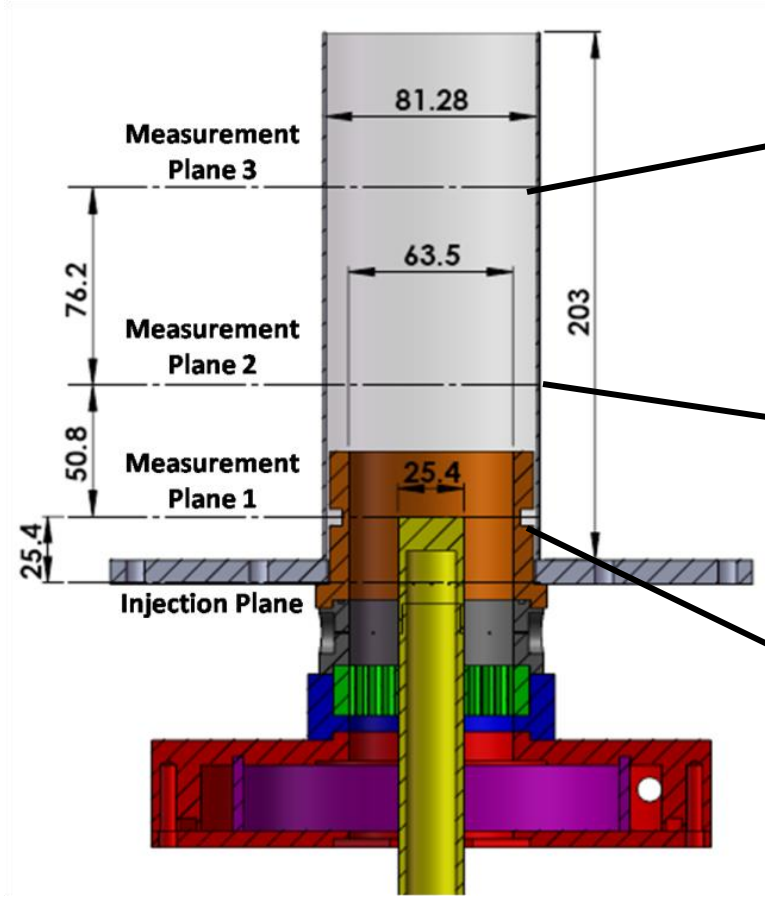

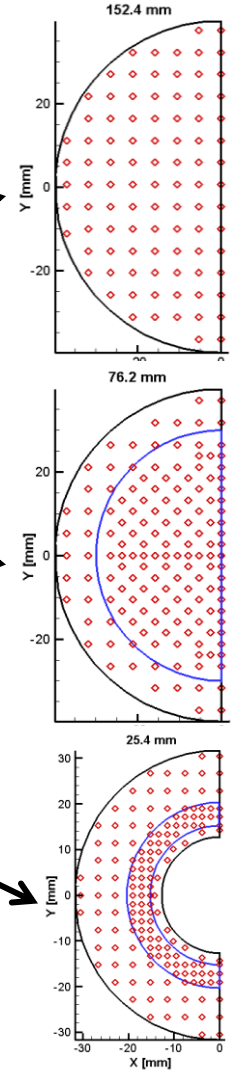

TecPlot Surface Meshing

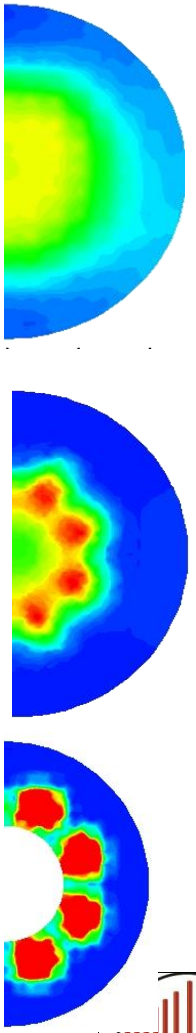

UCI Combustion Laboratory
University of California · Irvine

Task 2. 3 Measurements/Results

- **Radial jet Injection**

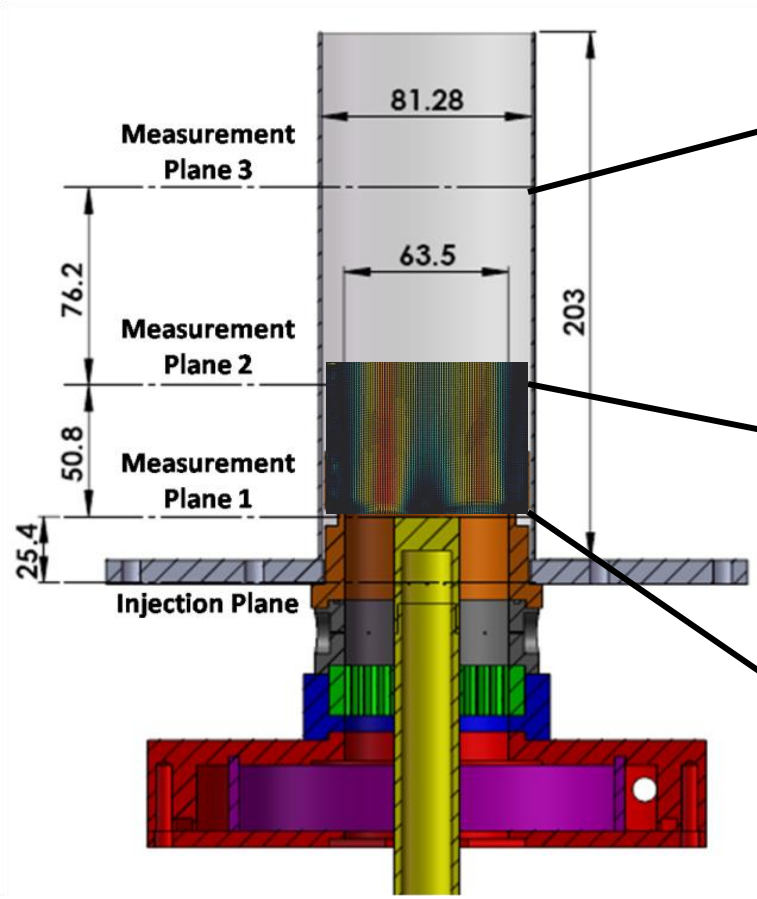

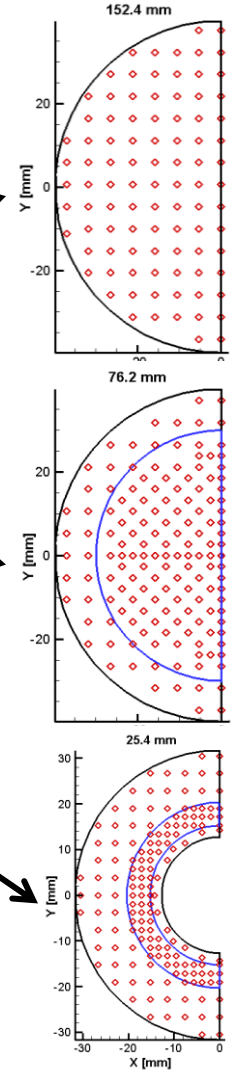

TecPlot Surface Meshing

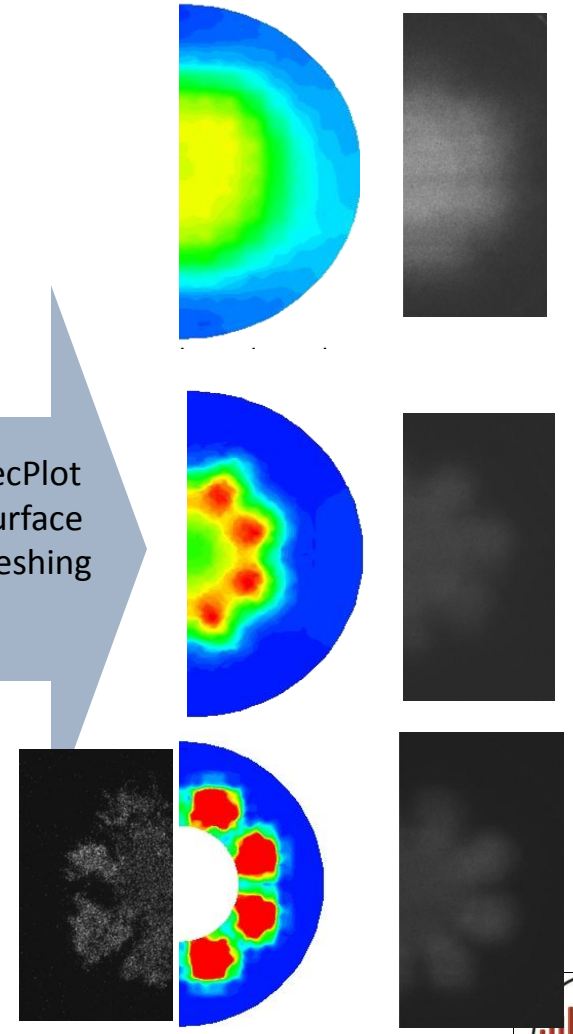

UCI Combustion Laboratory
University of California · Irvine

Task 2.4 Comparison

- **Radial Injection: Orientation for Planar Comparison**
  - **Methane/Air**
  - **$Sc_{,t}$ = 0.7**

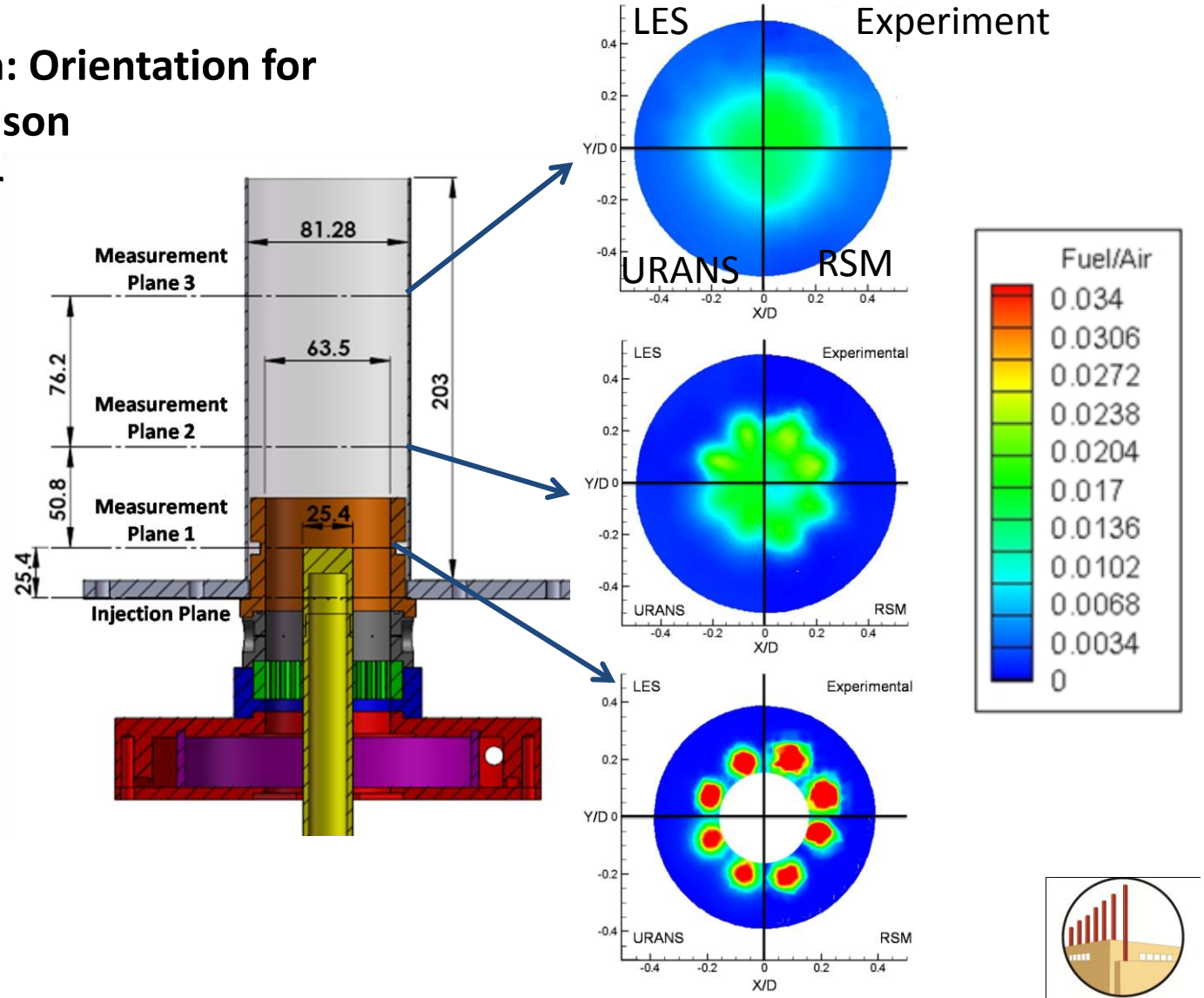

UCI Combustion Laboratory
University of California · Irvine

Task 2.4 Comparison

- **Radial Injection**
  Effect of $Sc_{,t}$: Methane

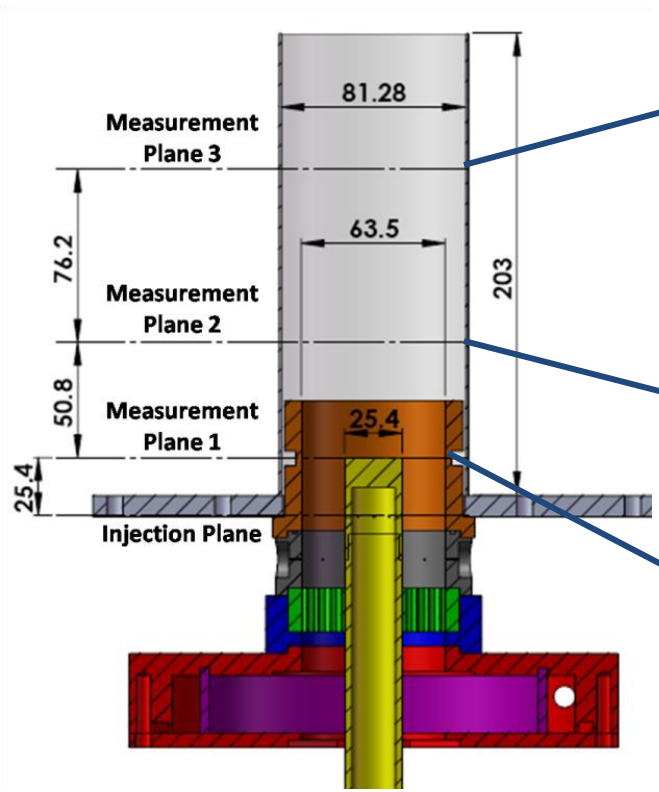

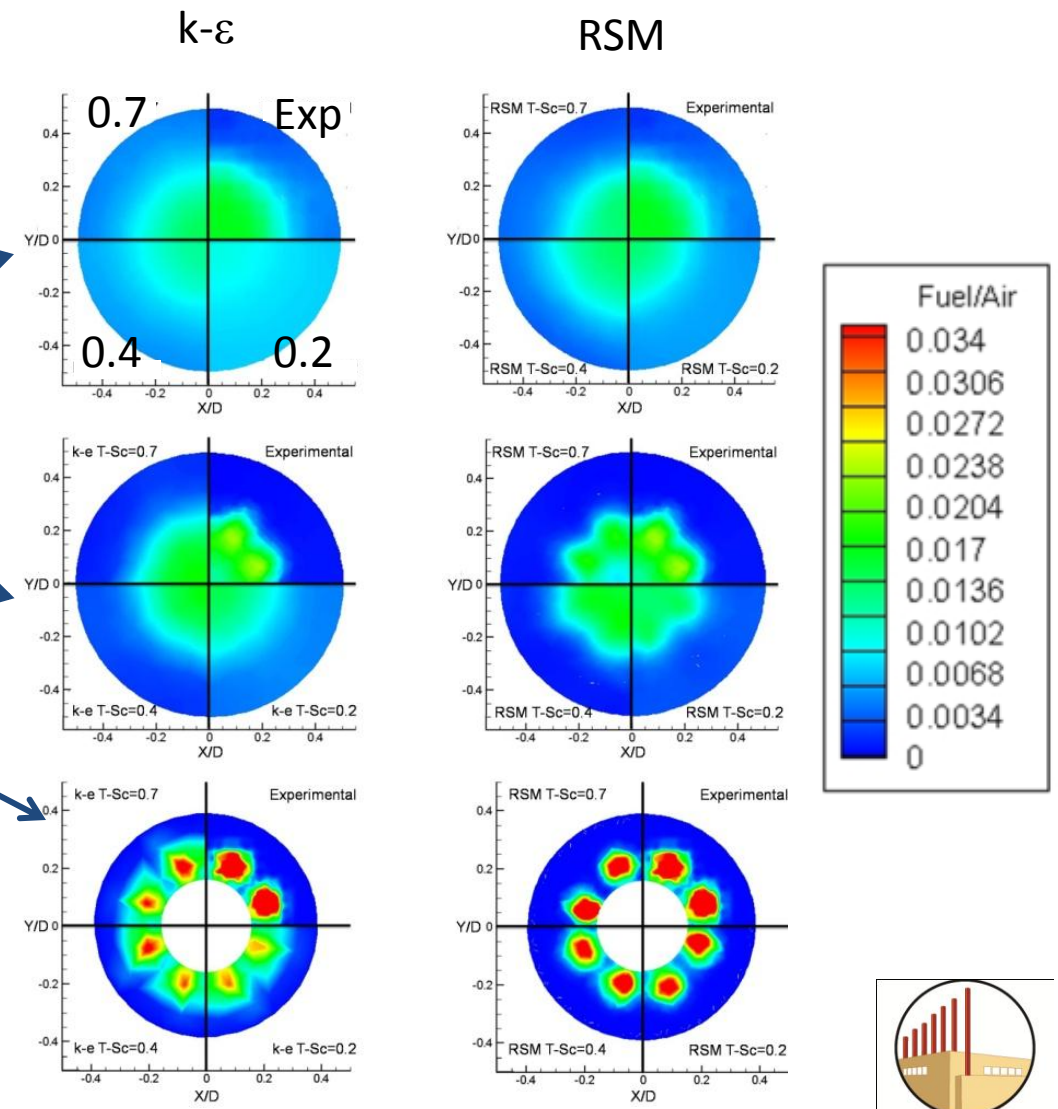

UCI Combustion Laboratory
University of California · Irvine

Task 2.4 Comparison

- **Radial Injection**
  Effect of $Sc_{,t}$: Hydrogen

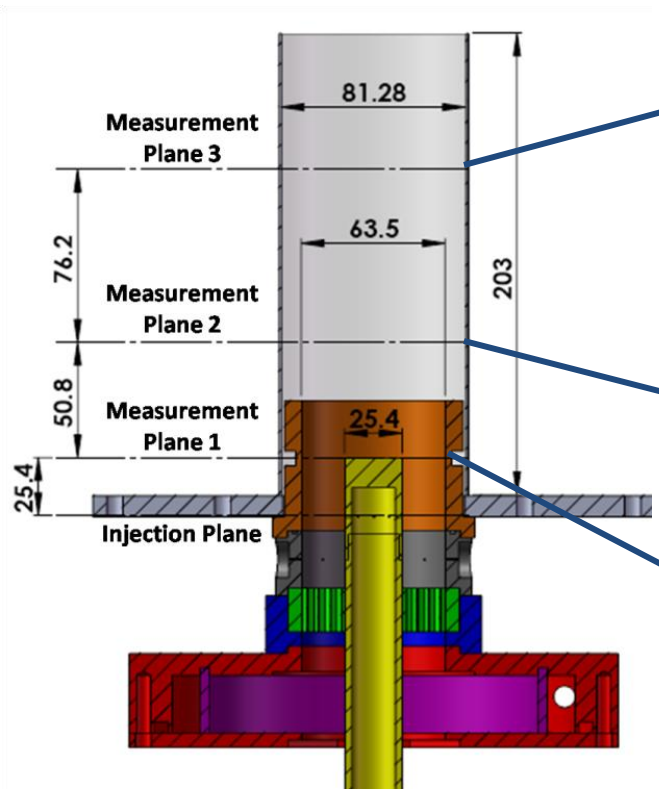

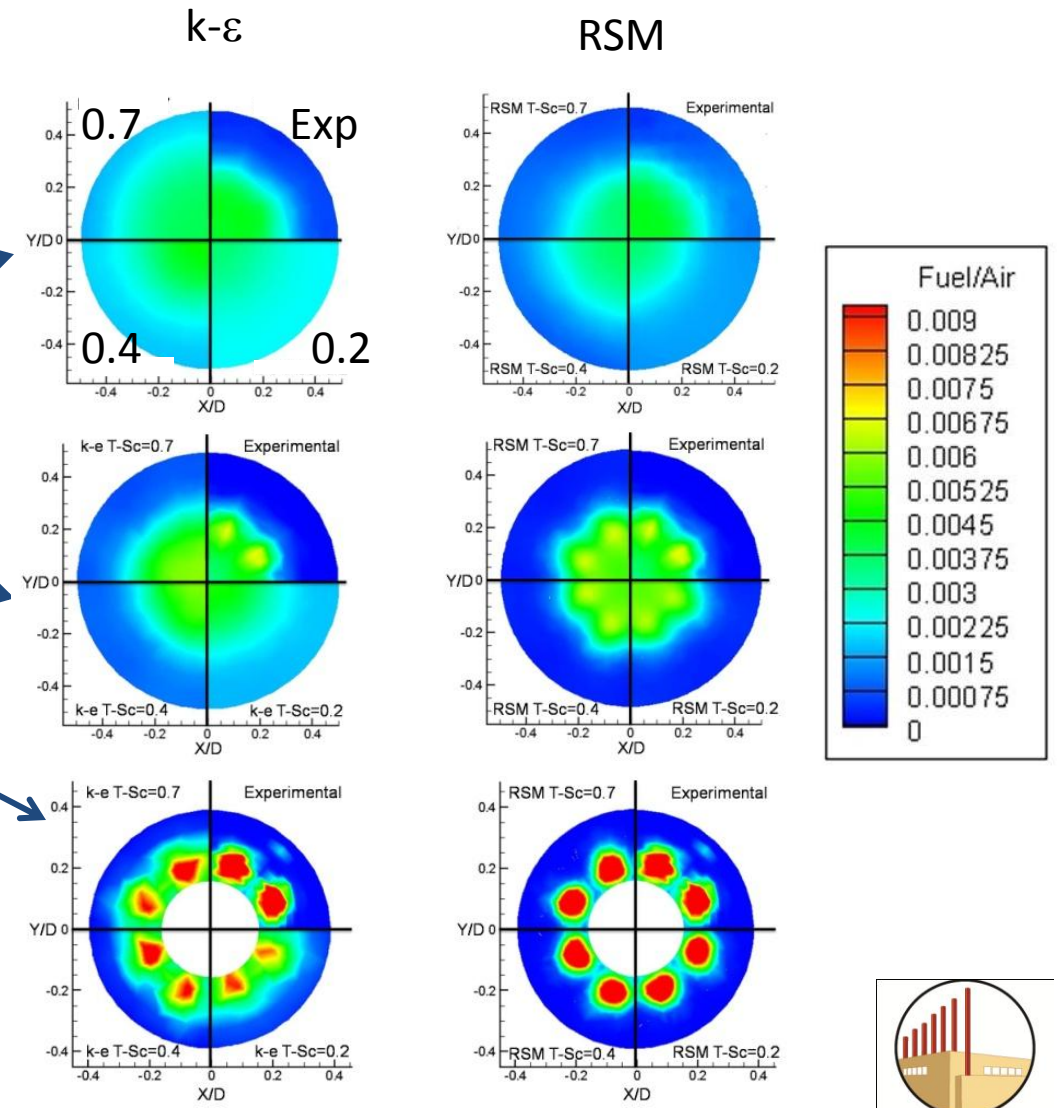

UCI Combustion Laboratory
University of California · Irvine

Task 2.4 Comparison

- **Radial Injection: Example Radial Profiles**
  - **Z2**

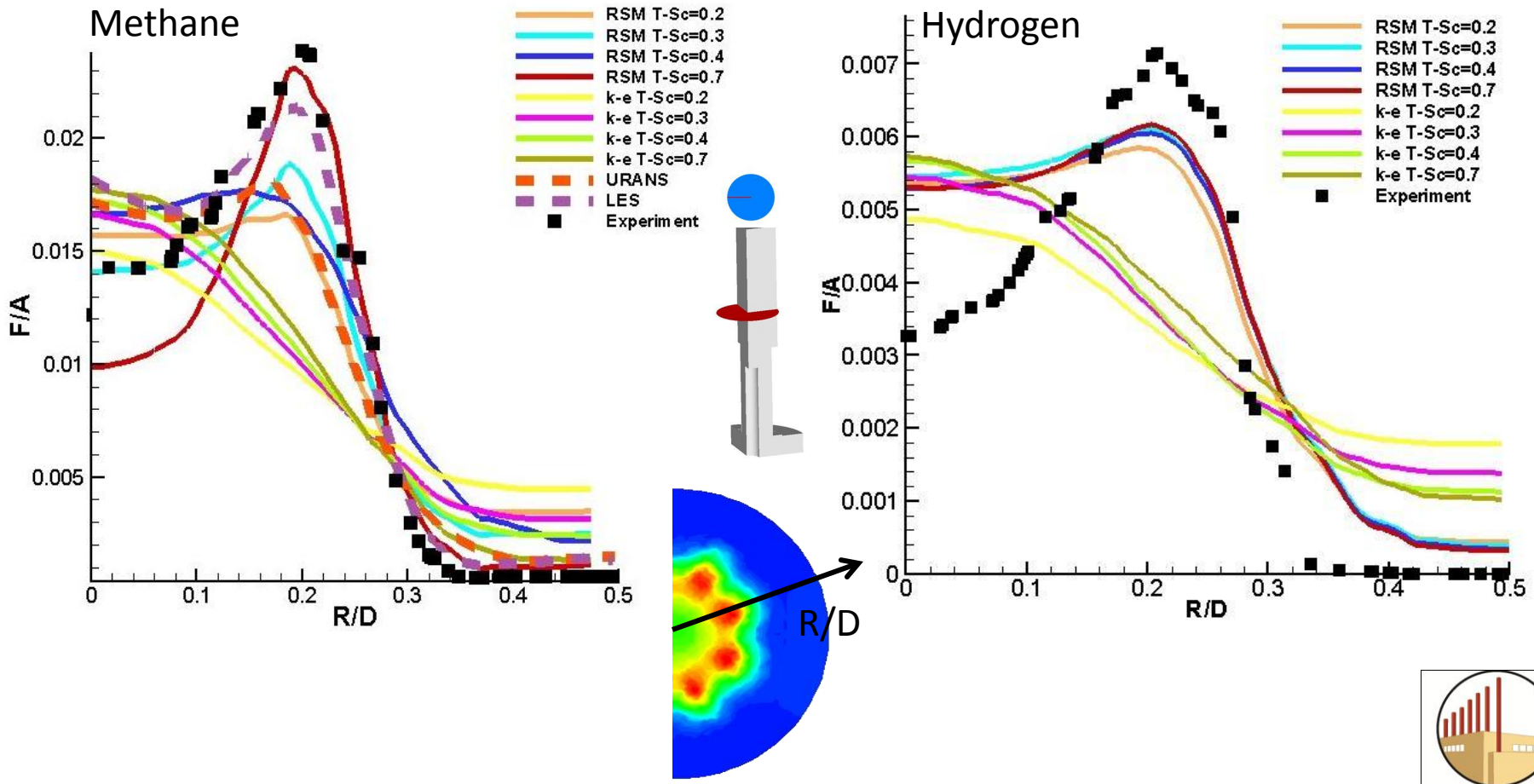

UCI Combustion Laboratory
University of California · Irvine

Task 2.4 Comparison

- **Radial Injection: Effect of Fuel Type: 152.6 mm downstream**

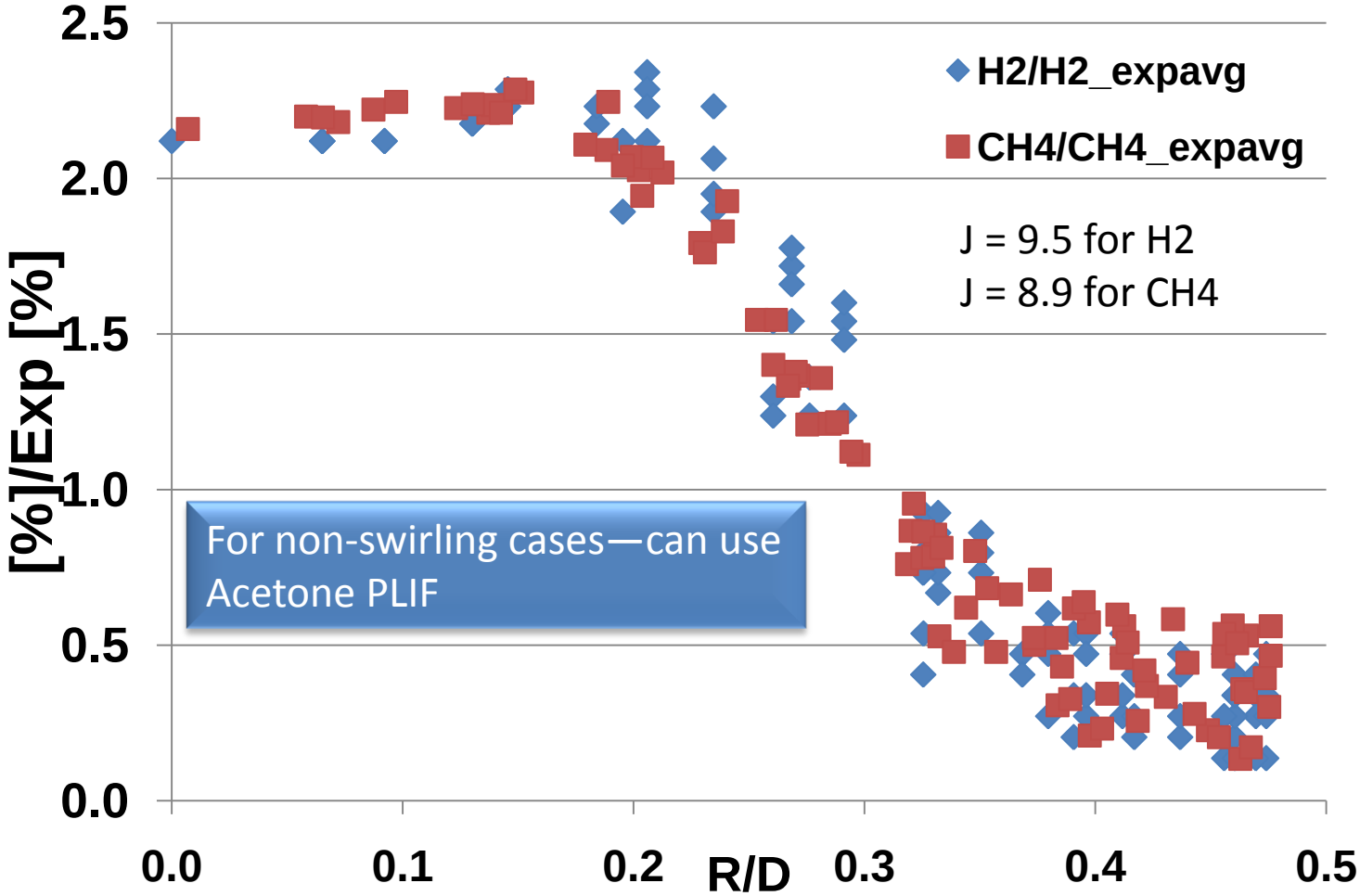

UCI Combustion Laboratory
University of California · Irvine

Task 2.4 Comparison

- **Axial Jet**

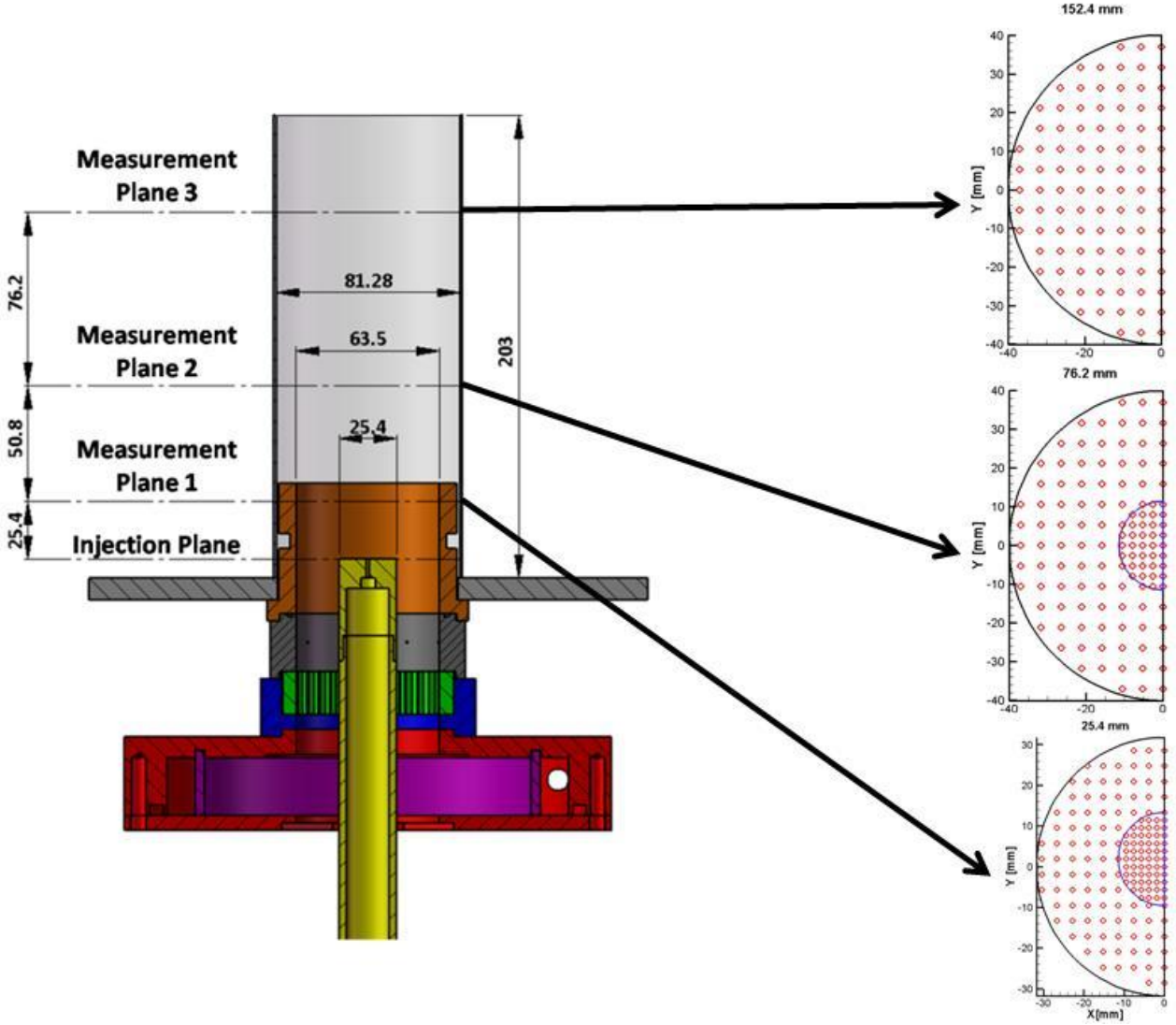

UCI Combustion Laboratory
University of California · Irvine

Task 2.4 Comparison

- **Axial Injection**
  Effect of $Sc_{,t}$: Methane

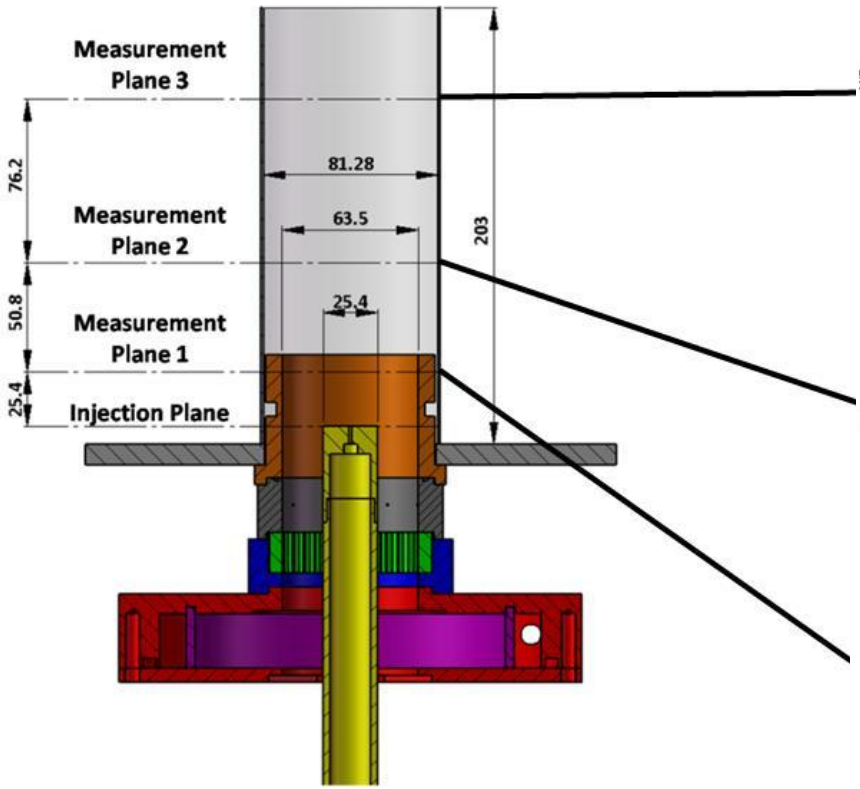

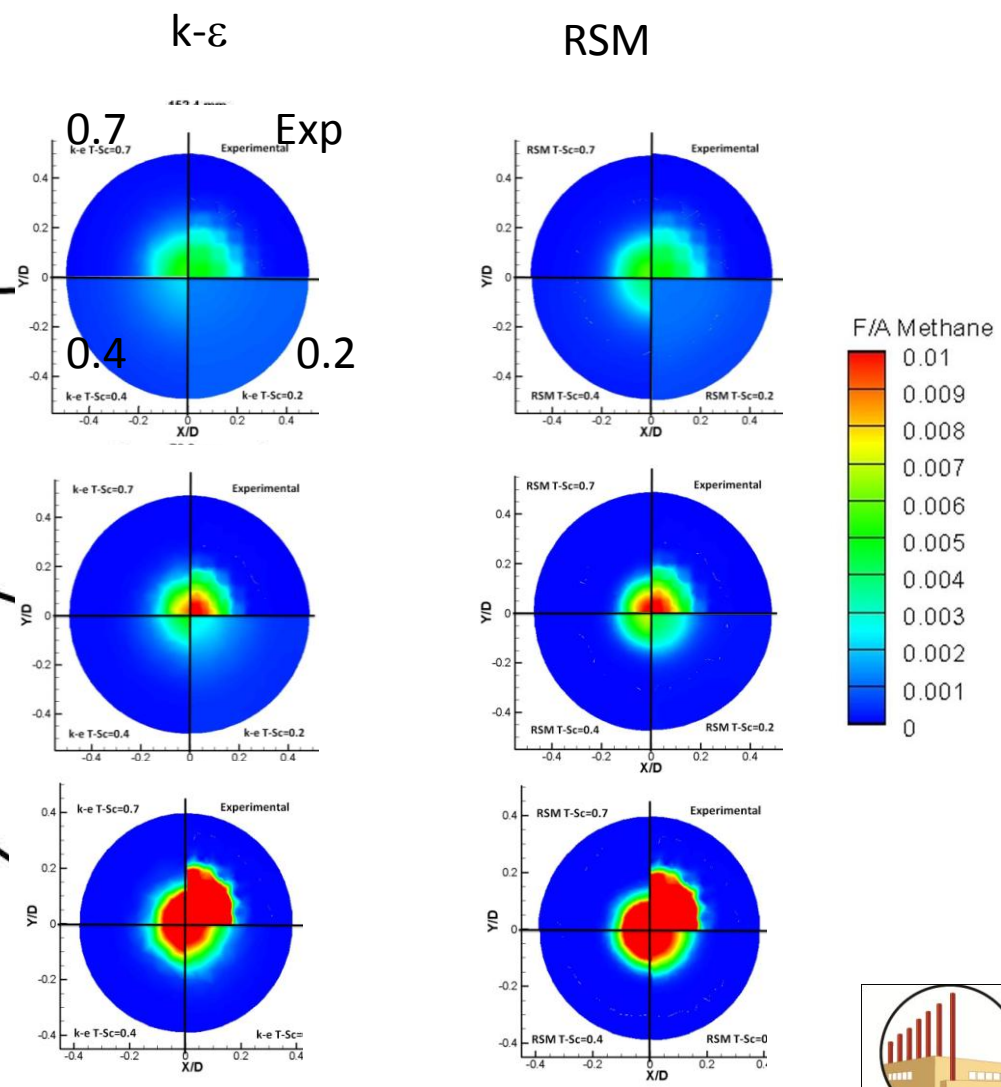

UCI Combustion Laboratory
University of California · Irvine

Task 2.4 Comparison

- **Axial Injection**
  Effect of $Sc_{,t}$: Hydrogen

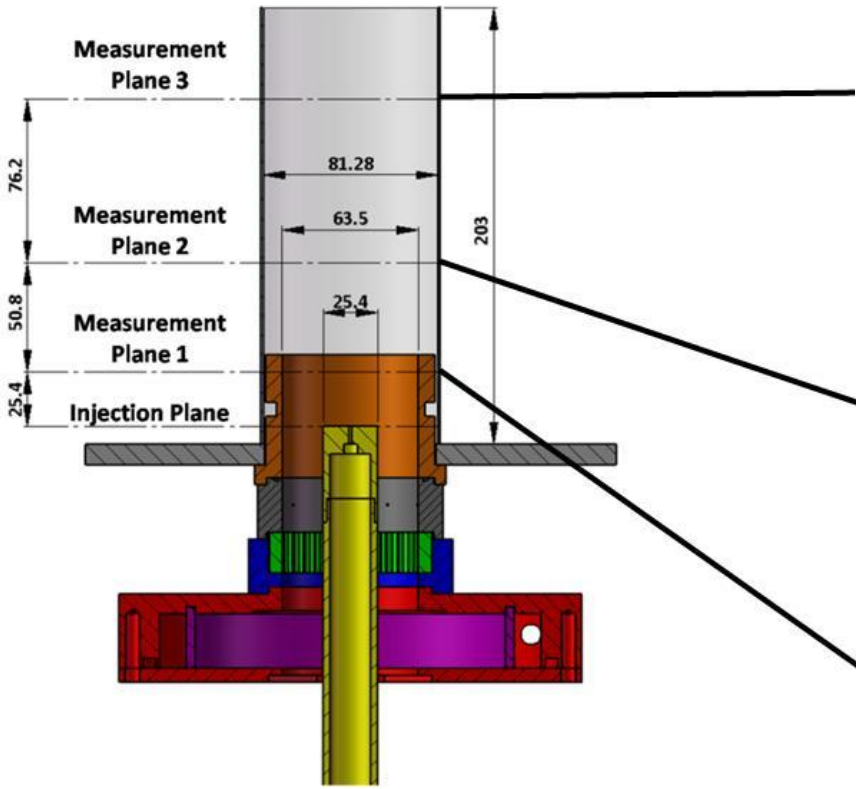

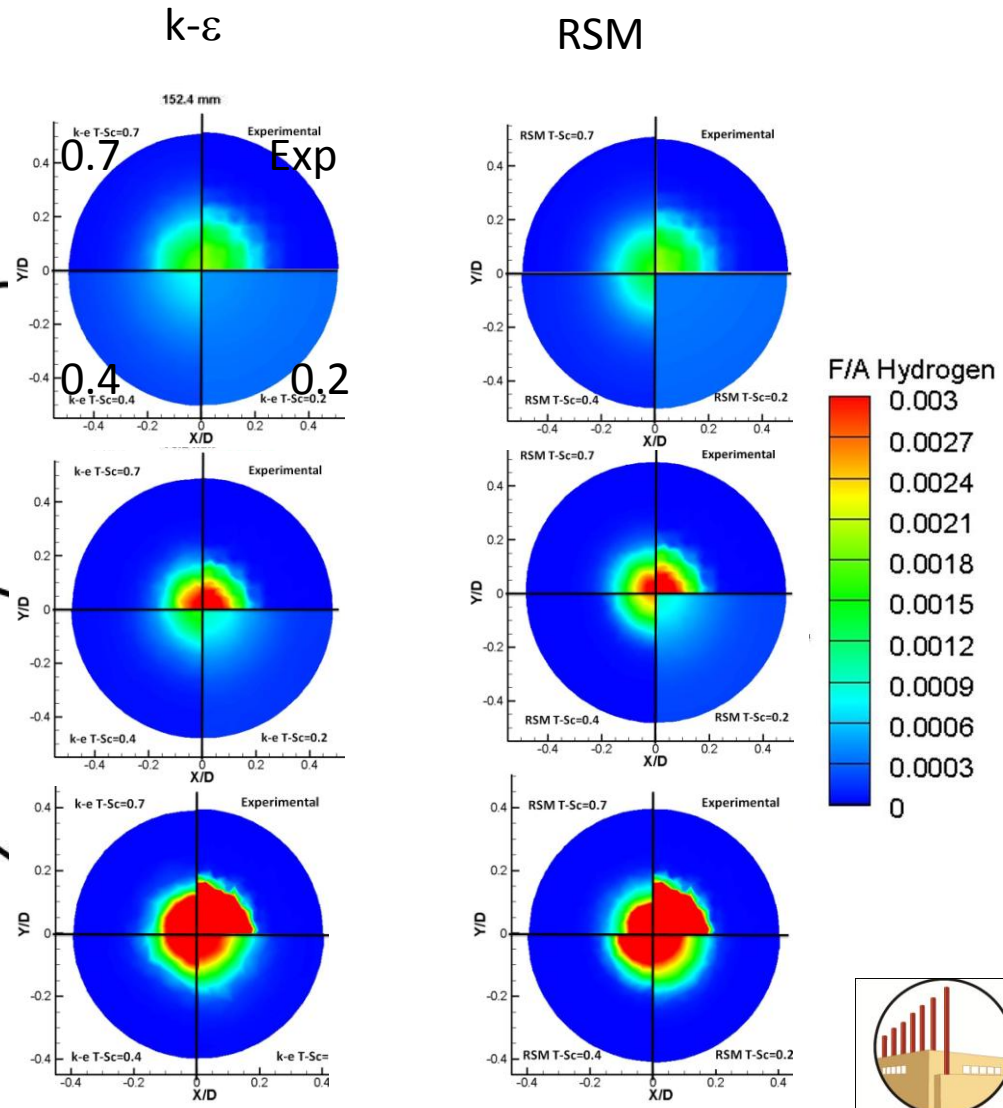

UCI Combustion Laboratory
University of California · Irvine

Task 2.4 Comparison

- **Axial Jet: Example Radial Profiles**
  - **Z2 Plane**

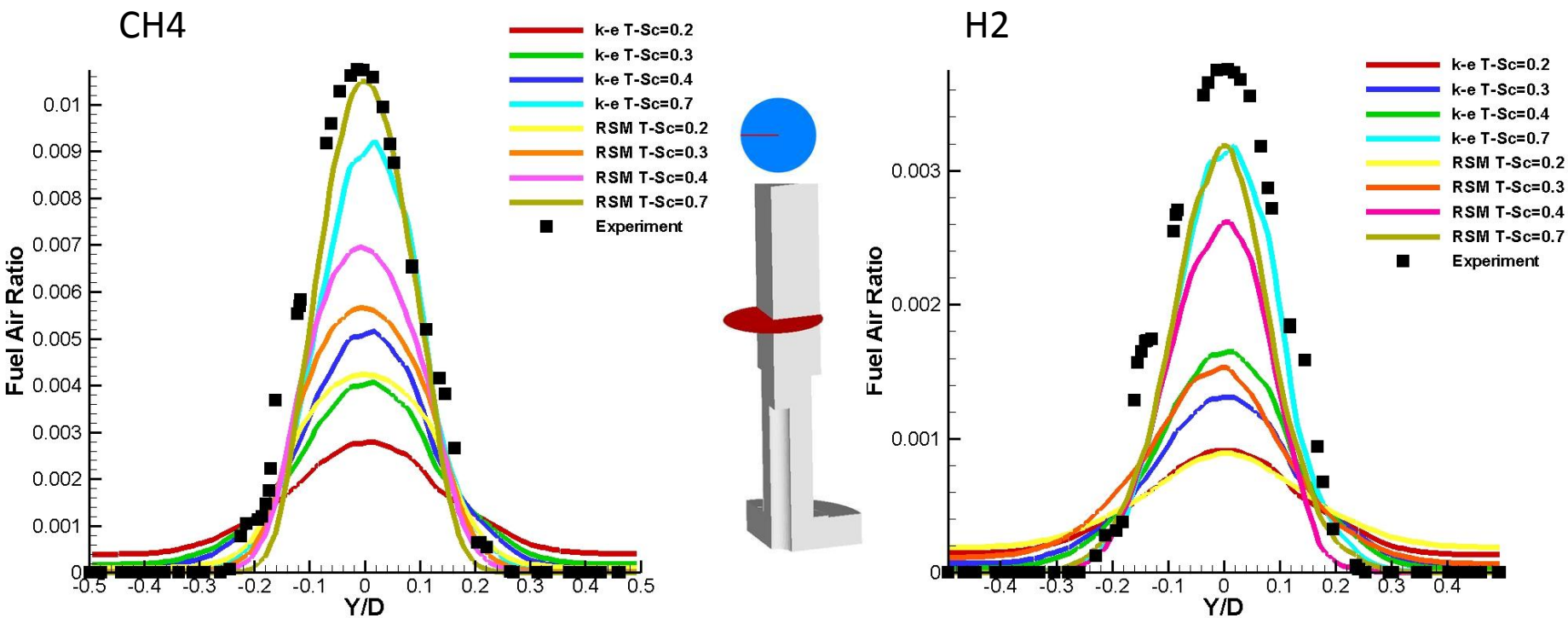

UCI Combustion Laboratory
University of California · Irvine

Task 2.4 Analysis

- **Five Factor Generalized Factorial Design Used**

Study Type	Factorial	Runs	96				
Design Type	Full Factorial	Blocks	No Blocks				
Center Points	0						
Design Model	2FI	Build Time (ms)	1.2921				
Factor	Name	Type	Subtype	Low Actual	High Actual		
A	Turb Model	Categoric	Nominal	**K-E**	**RSM**	Levels:	2
B	Fuel	Categoric	Nominal	**Methane**	**Hydrogen**	Levels:	2
C	Plane	Categoric	Nominal	**0.3125**	**1.875**	Levels:	3
D	T-Sch	Categoric	Nominal	**0.2**	**0.7**	Levels:	4
E	Injection Type	Categoric	Nominal	**Axial**	**Radial**	Levels:	2

(to be added: swirl—yes/no)

UCI Combustion Laboratory
University of California · Irvine

Task 2.4 Analysis

- **Response—Average magnitude of difference between simulation and experimental results normalized by mean measured F/A in each plane.**

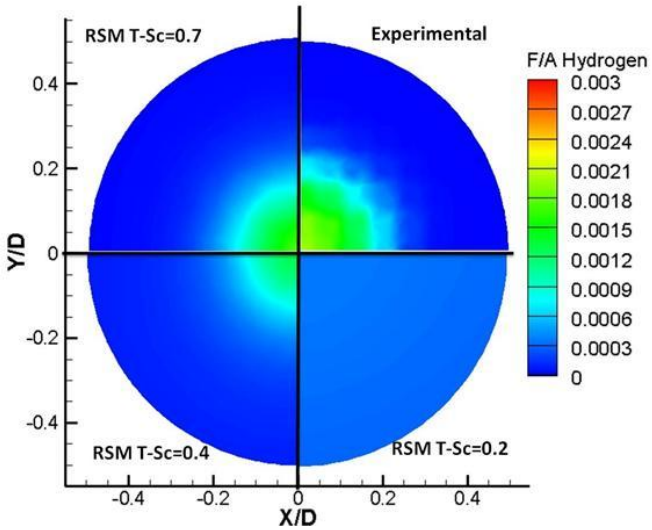

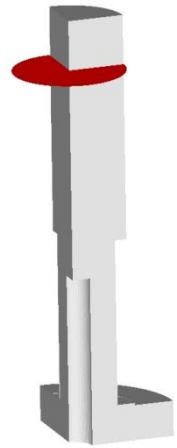

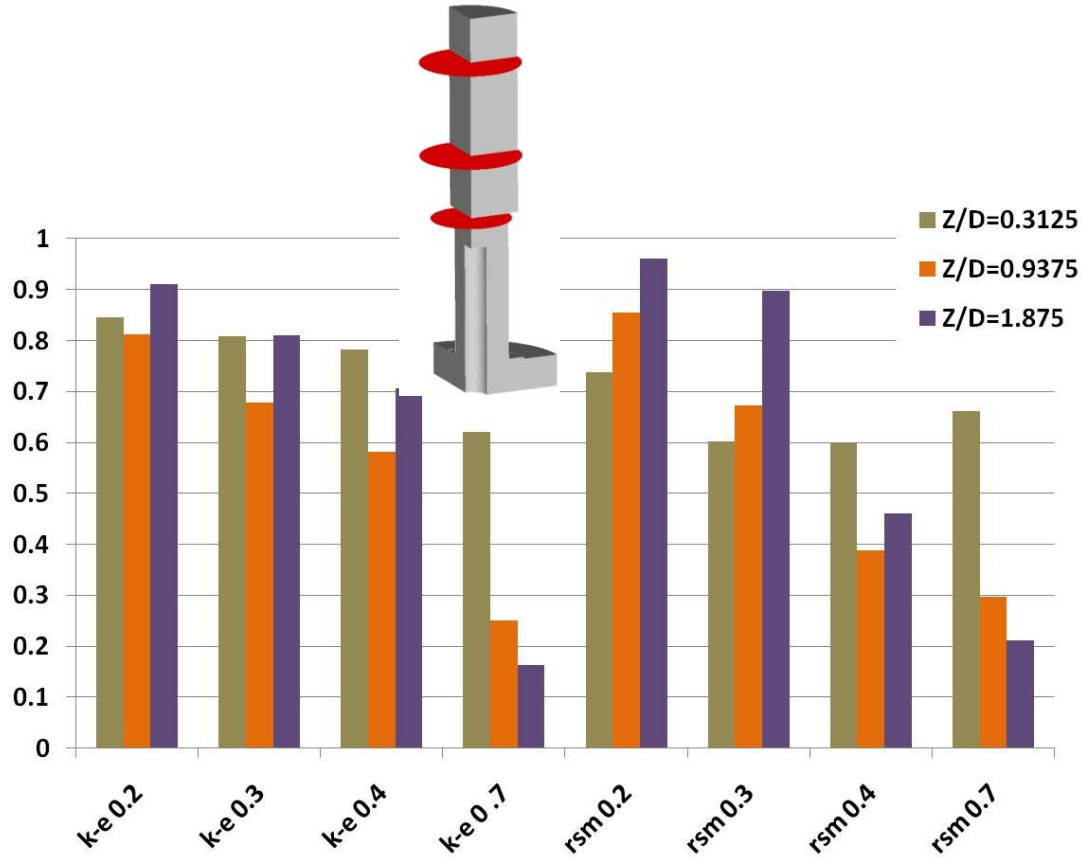

UCI Combustion Laboratory
University of California · Irvine

Task 2.4 Analysis

Analysis of variance table [Classical sum of squares - Type II]

Source	Sum of Squares	df	Mean Square	F Value	p-value Prob > F
Model	3.664	25	0.147	11.438	< 0.0001
A-Turb Model	0.504	1	0.504	39.322	< 0.0001
B-Fuel	0.088	1	0.088	6.896	0.0106
C-Plane	0.053	2	0.027	2.075	0.1332
D-T-Sch	1.162	3	0.387	30.224	< 0.0001
E-Injection Type	0.520	1	0.520	40.566	< 0.0001
CD	0.237	6	0.040	3.085	0.0097
CE	0.475	2	0.237	18.524	< 0.0001
DE	0.467	3	0.156	12.136	< 0.0001
CDE	0.159	6	0.026	2.065	0.0684
Residual	0.897	70	0.013		
Cor Total	4.561	95			

- Values of "Prob > F" less than 0.0500 indicate model terms are significant.
- In this case **A, B, D, E, CE, DE** are significant model terms.
- Values greater than 0.1000 indicate the model terms are not significant.

UCI Combustion Laboratory
University of California · Irvine

Task 2.4 Analysis

- **Predicted vs. Actual, Fuel Effect**

H_2
CH_4

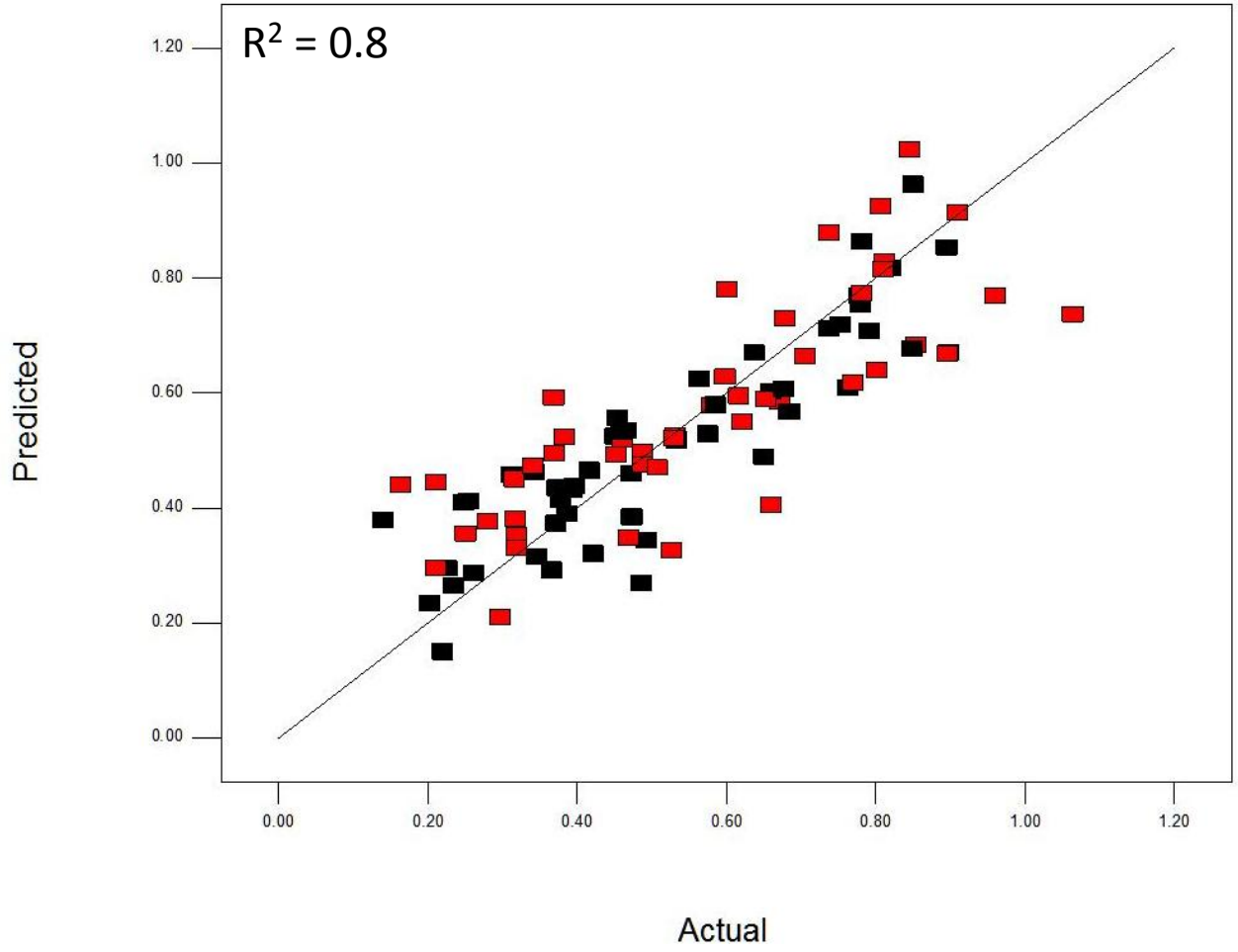

UCI Combustion Laboratory
University of California · Irvine

Task 2.4 Analysis

- **Fuel Type**
  - **Relatively small effect**
  - **H2 less accurate than CH4**

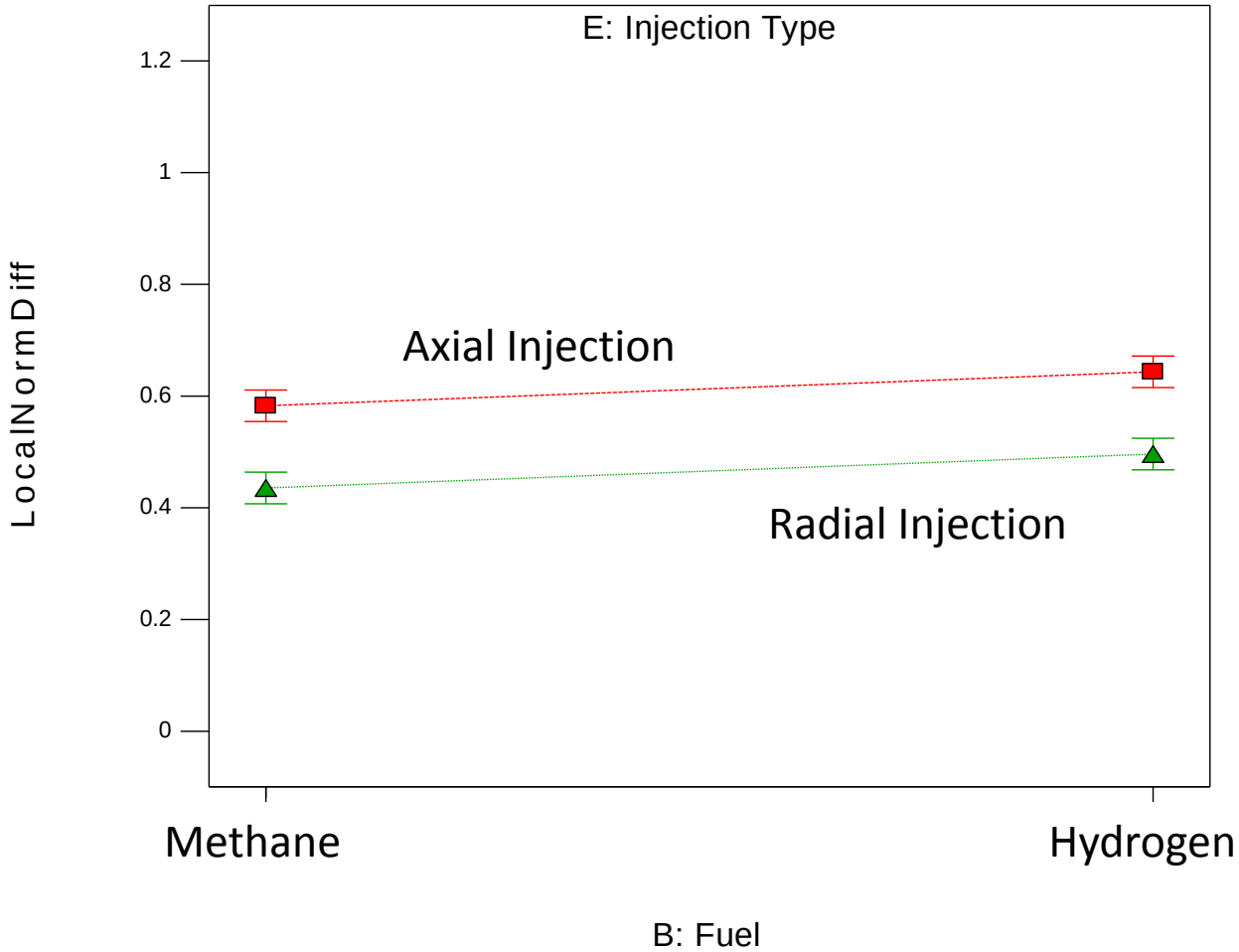

UCI Combustion Laboratory
University of California · Irvine

Task 2.4 Analysis

- **Injection Type/Sc**
  - **Axial Injection sensitive to Sc**
  - **Radial injection insensitive to Sc**

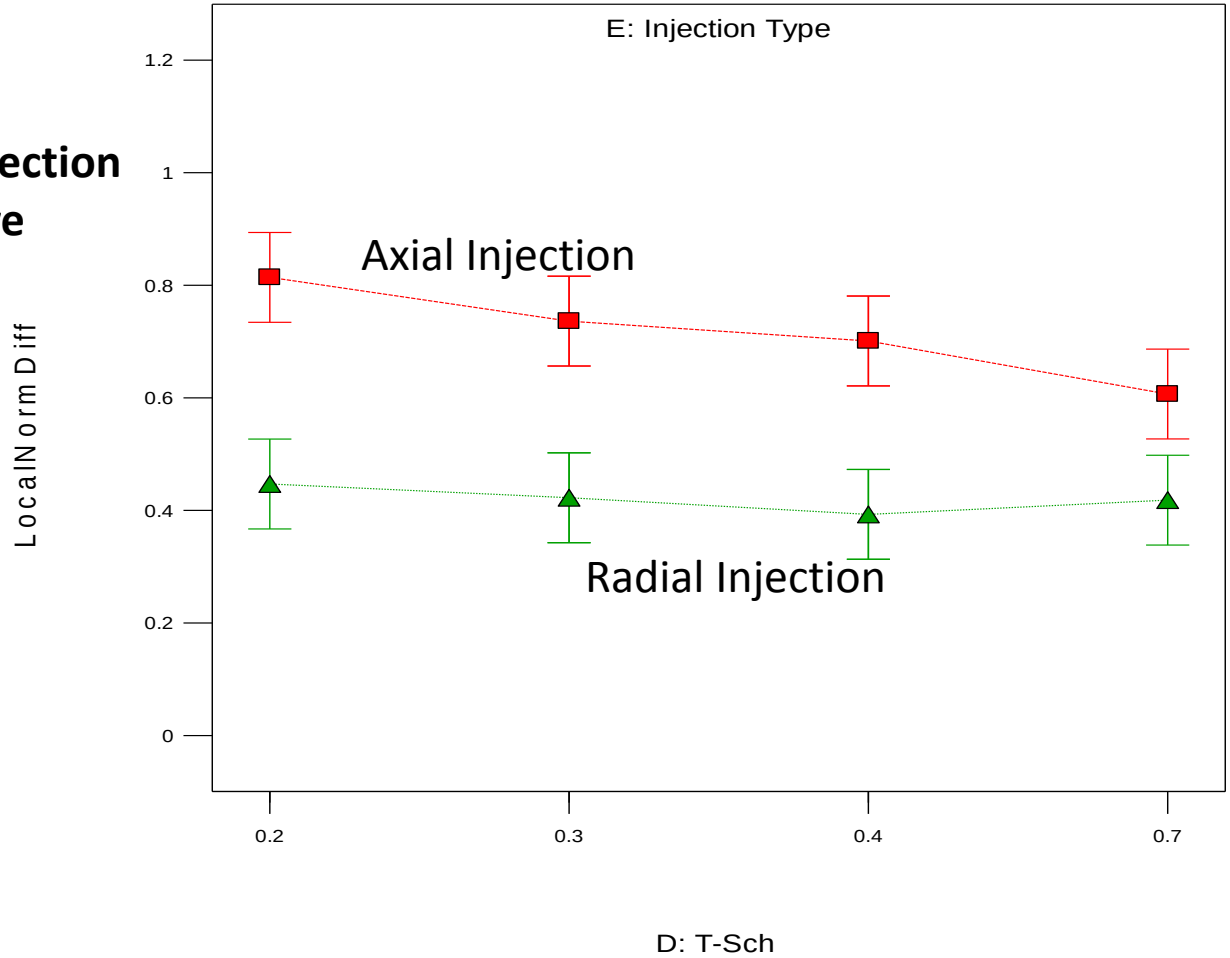

UCI Combustion Laboratory
University of California · Irvine

Task 2.4 Analysis

- **Sensitivity of Injection Type to Turbulence Model and Sc**

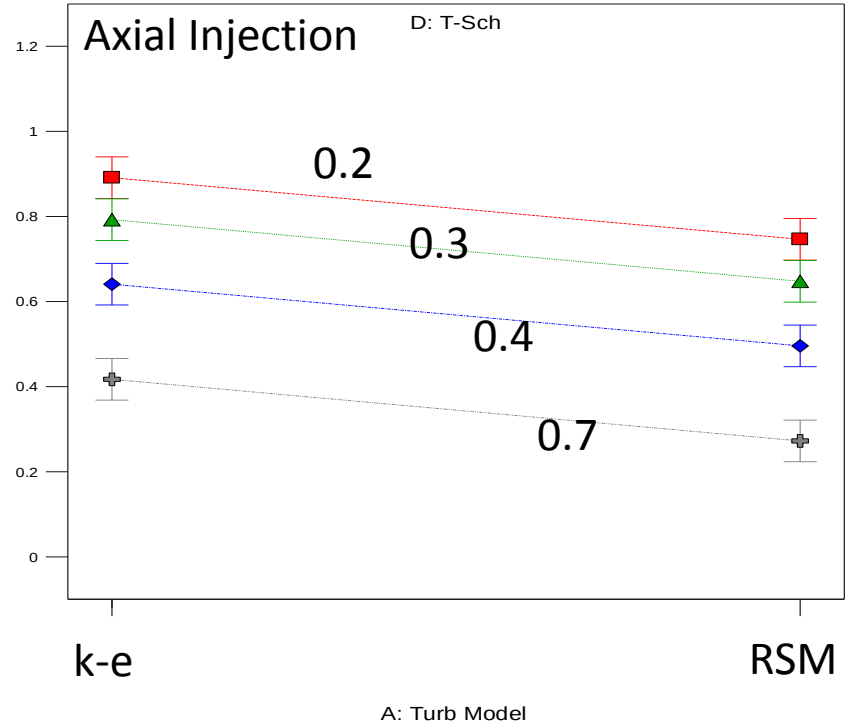

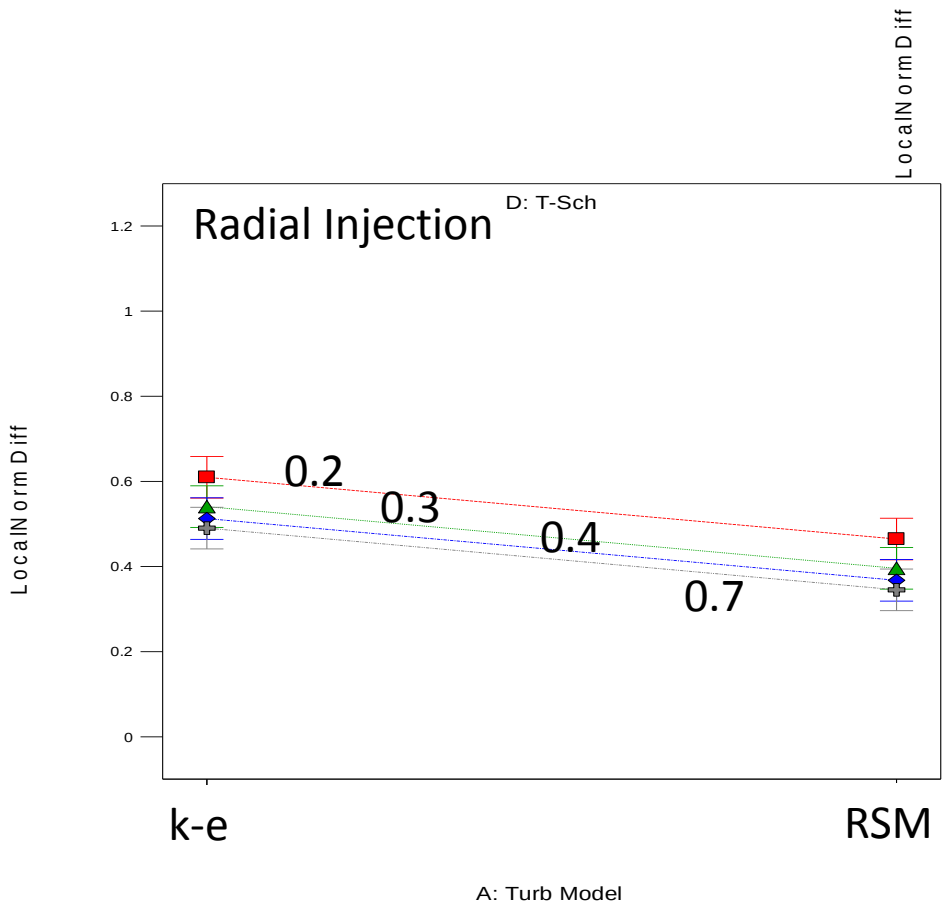

- Axial Injection: more sensitive to Sc
- RSM consistently superior

UCI Combustion Laboratory
University of California · Irvine

Task 2.4 Analysis

- **Sc/Axial Plane Interaction:**
  - **Less Sensitivity to Sc for Near Plane**
  - **Generally minor plane effect**

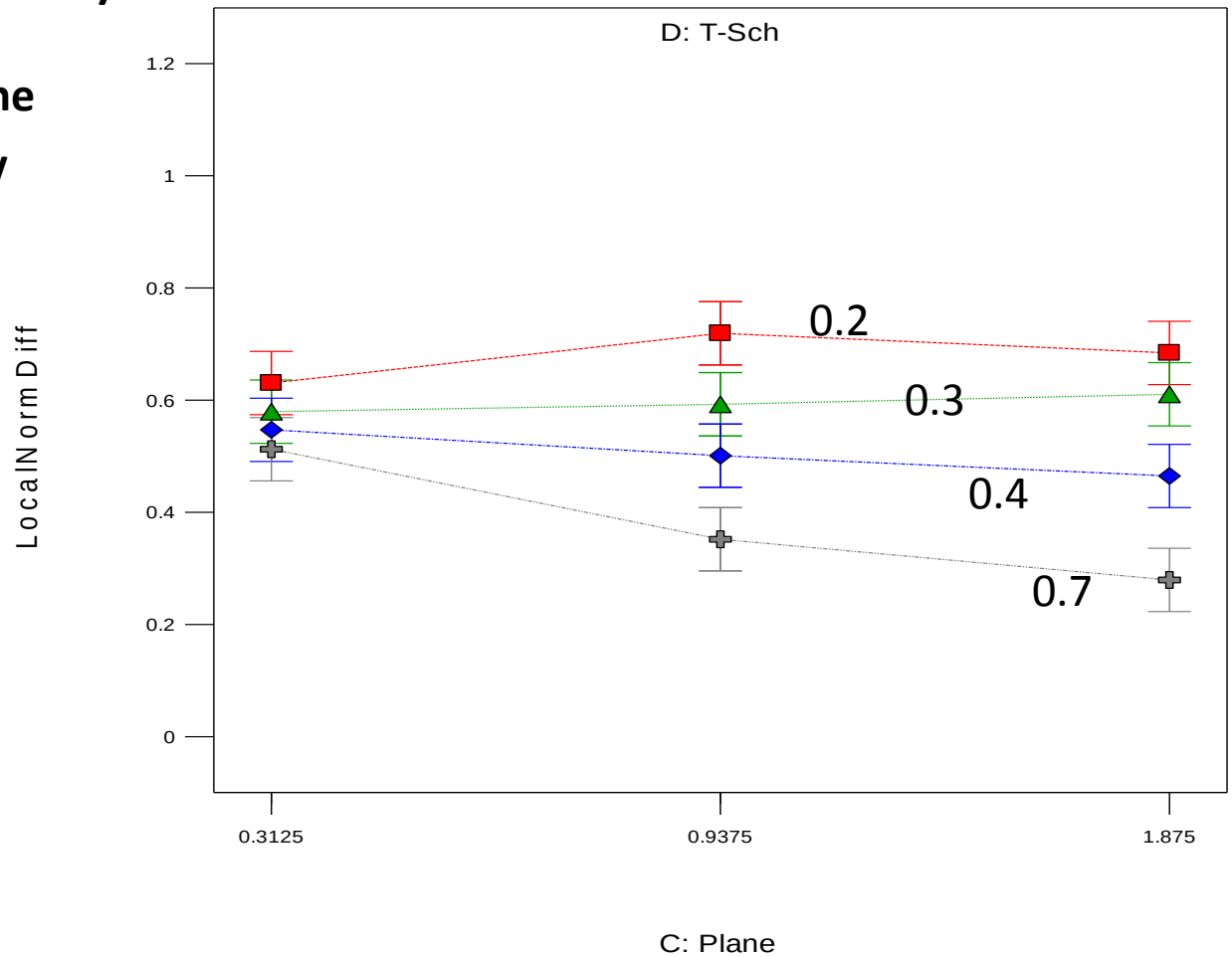

UCI Combustion Laboratory
University of California · Irvine

Task 2.4 Analysis

- **Sensitivity of Injection Type to Axial Plane and Sc**
  - **Interaction Noted**

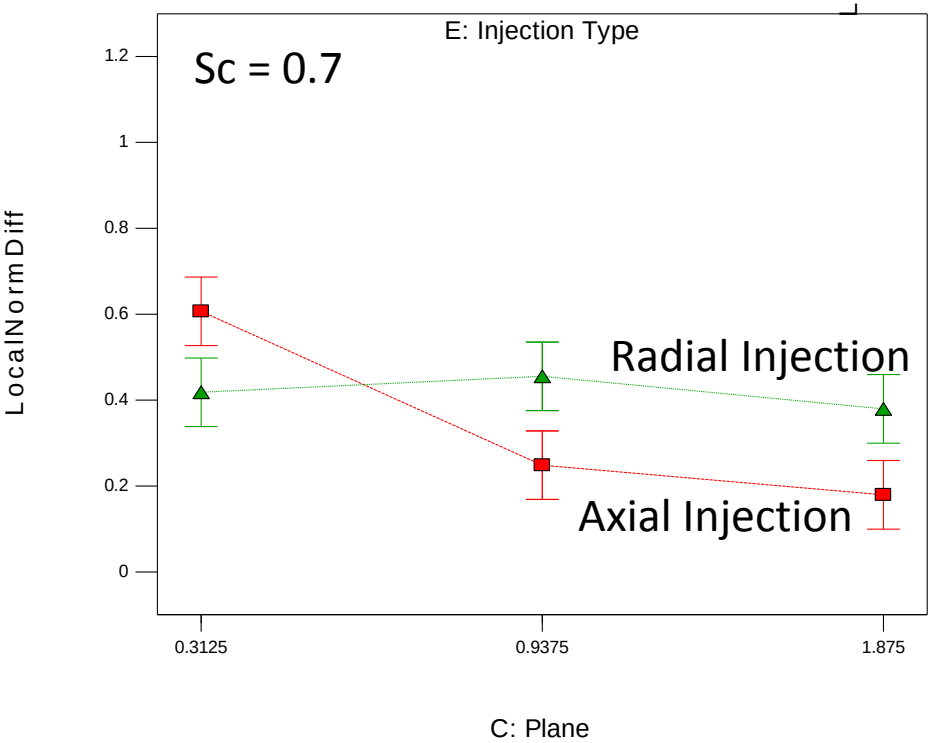

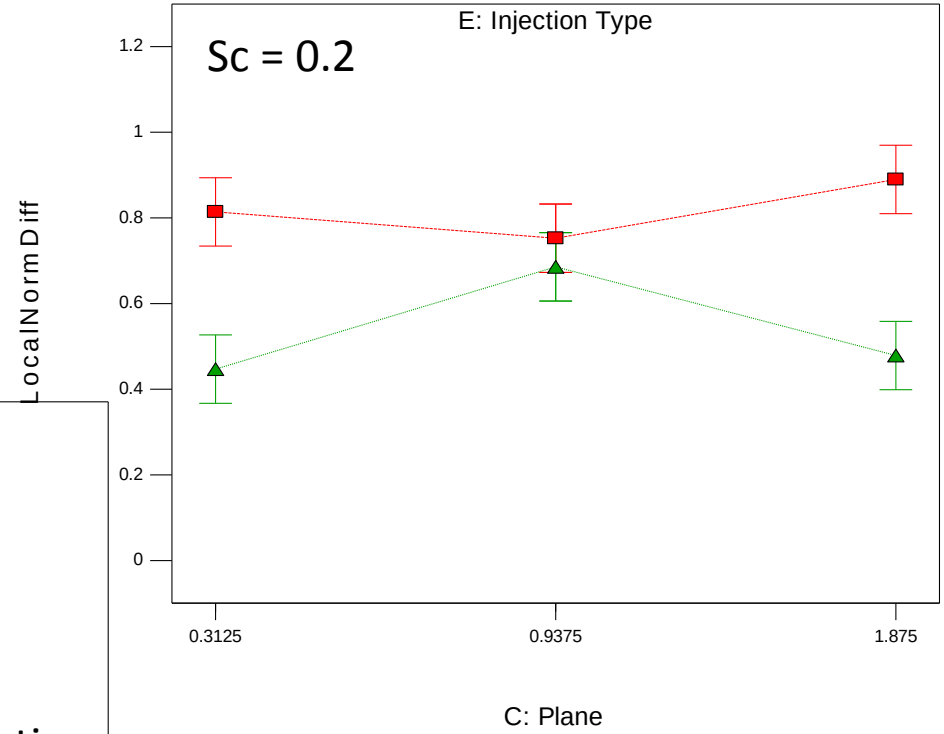

- Axial Injection: Sc sensitivity depends on plane—higher values less accurate in near field, more accurate in far field
- Radial Injection—less sensitivity to plane and Sc

UCI Combustion Laboratory
University of California · Irvine

Conclusions from ANOVA—non-swirling flows

- **Turbulence Model is important**
  - **RSM consistently superior to k-e**
- **Effect of fuel type minor**
  - **Implies H_2 is not "inherently more difficult" to simulate for these non-swirling conditions (expected to see stronger diffusive behavior)**
  - **Actual profiles for H_2 and CH_4 very similar!**
    - Turbulent mixing dominates these flow vs diffusion
- **Axial Plane dependency not significant on average**
  - **However, injection type interacts with plane and Sc**
    - Axial Injection→better agreement downstream with high Sc
    - Axial Injection→worse agreement downstream with low Sc
    - Radial Injection→insensitive to Sc
- **Turbulent Schmidt # value important for axial injection**
  - **Higher values give better agreement for axial injection**
  - **Radial injection is dominated by turbulence (no Sc dependency)**
- **Other general observations**
  - **Convergence and run time longer for H_2 compared to CH_4**

UCI Combustion Laboratory
University of California · Irvine

Summary and Next Steps

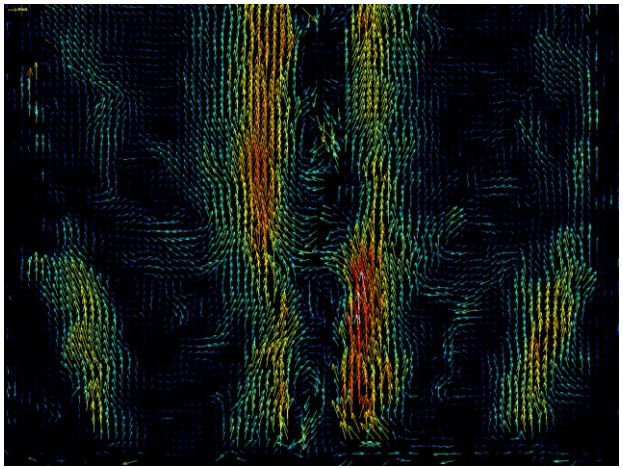

- **Results for swirling flow cases 90% completed**
- **Completion of Analysis**
  - **Other "responses" (e.g., unmixedness from experiments and simulations)**
  - **ANOVA for swirling cases**
  - **Generalized analysis (include swirling results with non-swirling)**
  - **Recommendations for simulation approaches for given flow classes**
- **Final Report**

Thank You!