Texas Clean Energy Project

Coal Gasification with 90% Carbon Capture & Sequestration

2010 NETL CO2 Capture Technology Meeting

Sheraton Station Square, Pittsburg, PA

September 16th,2010

Snapshot of TCEP

- 400 MWe gross IGCC project with 90% carbon capture
- Siemens: 2 gasifiers & 1 high-H_2 CT + 1 ST in combined cycle

Snapshot of TCEP

SUMMIT POWER

- Located at FutureGen "finalist" site directly atop Permian Basin; nearby opportunities for CO_2 enhanced oil recovery (EOR)
- U.S. Department of Energy announced $350MM award to TCEP December 2009 ($211MM in Recovery Act funds); additional $100MM awarded in August 2010
- Front End Engineering and Design (FEED) launched June 30, 201 Summit, Siemens, Linde, and Fluor
- Commercial components proven; "integration" of "IGCC" with carbon capture and storage (CCS) is new -- a reference plant
- Siemens to warrant long-term performance & availability
- 90% carbon capture rate yields ≈ 2.9M tons of CO_2/year

Summit Power Group

- Founded by Donald Paul Hodel & Earl Gjelde
- Summit's traditional business = develop plants for others
- Principal business lines currently:
  - Wind power projects (including White Creek & its financial model)
  - Solar power (our utility-scale PV solar JV w/ REC: NorthLight)
  - Natural gas-fired power plants, principally Siemens CCCTs
  - Gasification with carbon capture (TCEP, others)
- These projects are clean, low- or no-carbon, & aid security

Why Texas?

- Environmental groups sought IGCC alternative to conventional coal-fired power plants in Texas & asked Summit to take a look
- Texas has excellent market for captured CO_2
- Project would not depend on (1) climate legislation, or (2) new long CO2 pipeline
- Suitable sites can also be found for "stacked storage" of CO_2
- Ex-FutureGen site has prior review & local support
- Midland-Odessa officials sought private-sector replacement project for FutureGen

Project Site

Former FutureGen finalist site at Penwell

Located 15 miles west of Odessa, 0.5 miles north of I-20, at FM 1601, which borders the property

- 600 acres, flat land, stable geology
- Electricity transmission in vicinity of project is adequate
- Multiple water supply alternatives
  - zero liquid discharge
  - reduced water consumption: dry and wet cooling
- Natural gas: 2 nearby mainlines; 1 onsite small line
- CO_2 pipelines & EOR infrastructure exist nearby
- Railroad bordering site

Oneok Westex 24" Pip
866
West Odessa
Moss S
Alt. Power Transmission Line #1A
Alt. Power Transmission Line #1B
Alt. Access Rd. #1B
Proposed GCA to S
Alt. Water Suppl
Project Site
8 kV Transmission
Existing 138 kV Transmission
Penwell
CO2 Pipeline
Alt. Access Rd. #1A
Oxy Permian Pipeline
Alt. Water Supply Pipeline #2
20
Alt. Water Supply Pipel
Alt. Water S

Design Basis

- "Polygen" IGCC design for multiple products:
  Electricity, CO_2, urea (fertilizer), sulfuric acid
- Powder River Basin (Cordero-Rojo) low-sulfur coal
- Natural gas for startup, backup & during maintenance
- Base load operation; includes some turn-down capability
- Warranted high availability of power block & gasifiers

Low Air Emissions

- NOx, SOx & PM far below lowest-yet limits permitted in Texas for fossil fuel power plants

- Sulfur removal is 99% despite using low sulfur coal

- Mercury removal greater than 95%

- CO2 capture rate of 90%

  - CO_2 emissions rate (lbs per MWhr) only 20 to 30% of a natural gas combined-cycle power plant

Linde's Plant Concept for the Odessa Project.

THE LINDE GROUP

The Linde Proposal covers:

- a 2-Stage Sour Shift incl. Heat Recovery Section (for CO shift)
- the Rectisol® Wash Unit (RWU) (for acid gas removal)
- the Nitrogen Wash Unit (NWU) (for production of ammonia synthesis gas)
- a Sulphuric Acid Plant (for production of sulphuric acid)

In order to produce

- Power
- Ammonia
- Sulphuric Acid

Linde's Plant Concept for the Odessa Project

Linde has many References for Rectisol®, as well as for the Combination with a Nitrogen Wash Unit

Location	Gasification, Feedstock	Shift / Unshift	Final Purification	Products	CO Production	Date of Start up
Ningdong, PR China				Methanol/CO		
Changwu, PR China	GE Texaco, Coal			MeOH Syng.		2012
Ninh Binh, Vietnam	**Shell, Coal**		**N2-Wash**	**NH3**		**2011**
Wuwei, PR China	Chin. Slurry, Coal		HYCO Linde CP-1	CO/MeOH Syng.	32500 Nm^3/h	2011
Ningbo, PR China	Chin. Slurry, Coal		HYCO Linde CP-2	CO/MeOH Syng.	17500 Nm^3/h	2010
Xianyang, PR China	GE Texaco, Coal			MeOH Syng.		2010
Nanjing, PR China	GE Texaco, Coal		HYCO Linde CP-1	CO/MeOH Syng.	30000 Nm^3/h	2009
Jiangsu, PR China	Chin. Slurry, Coal		HYCO Linde CP-1	CO/MeOH Syng.	37500 Nm^3/h	2009
Tianjin, PR China	**Shell, Coal**		**N2-Wash/ HYCO**	**NH3/CO**	**15400 Nm^3/h**	**2009**
Tianjin, PR China	Shell, Coal			MeOH Syng.		2009
Baotaou City, PR China	GE Texaco, Coal					2009
Guizhou, PR China	Shell, Coal					2009
East Dubuque, IL, USA	Conoco Phillips, Coal		Fisher Tropsch			2009
Gdansk, Poland	Shell, Heavy Residue		Methanation	H2/IGCC Fuel		2008
Buggenum, Netherlands	Shell, Coal			Pilot Plant		2008
Qilu, PR China	GE Texaco, Coal		Methanation	MeOH Syng/Oxo/H2		2008
Shanghai, PR China	GE Texaco, Coal		HYCO Linde CP-1	CO/MeOH Syng.	22500 Nm^3/h	2008
Nanjing, PR China	GE Texaco, Coal		HYCO Linde CP-1	CO/MeOH Syng.	30000 Nm^3/h	2007

Linde's Plant Concept for the Odessa Project

Linde has many References for Rectisol®, as well as for the Combination with a Nitrogen Wash Unit

Location	Gasification, Feedstock	Shift / Unshift	Final Purification	Products	CO Production	Date of Start up
Majiata, PR China	Shell, Coal		PSA	H2		2007
Huashan, PR China	Shell, Coal		N2-Wash	NH3 / UREA		2007
Yunnan, PR China	Shell, Coal		N2-Wash	NH3 / UREA		2006
Yingcheng, PR China	Shell, Coal		Methanation	NH3 / Soda Ash		2004
Shanghai, PR China	Texaco, Coal		HYCO Linde CP-1	CO / MeOH Syng.	7300 Nm^3/h	2002
Jilin, PR China	Texaco, Oil		N2-Wash	NH3 / UREA		2002
Nanjing, PR China	Texaco, Oil / Eur. P.		N2-Wash	NH3 / UREA		2002
Singapore, PR China	Texaco, Oil		HYCO Linde CP-1	CO / H2	29800 Nm^3/h	2000
Shaanxi Weihe, PR China	Texaco, Coal		N2-Wash	NH3 / UREA		1995
Dalian, PR China	Texaco, Oil		N2-Wash	NH3 / Carbamate		1995
Shanghai, PR China	Texaco, Coal		HYCO Linde CP-1	CO / MeOH Syng.	7000 Nm^3/h	1995
Himeji, Japan	Texaco, Oil		CO Box	CO		1992
Nangxia, PR China	Texaco, Oil		N2-Wash	NH3 / UREA		1986
Berrenrath, Germany	HTW, Lignite			MeOH Syng.		1986
Urumqi, PR China	Texaco, Oil		N2-Wash	NH3 / UREA		1985
Taipeh, Taiwan	Texaco, Asphalt		HYCO Linde MW-3	CO / H2	9000 Nm^3/h	1984
Louisiana, USA	Texaco, Oil			H2		1984

Linde's Plant Concept for the Odessa Project

Linde has many References for Rectisol®, as well as for the Combination with a Nitrogen Wash Unit

Location	Gasification, Feedstock	Shift / Unshift	Final Purification	Products	CO Production	Date of Start up
Ube City, Japan	Texaco, Coal		Methanation	NH3 / CO2		1984
Zenhai, PR China	Texaco, Oil		N2-Wash	NH3 / UREA		1983
Tennessee, USA	Texaco, Coal		HYCO Linde CP	CO / MeOH Syng.		1983
Zambia, Sambia	Koppers, Coal		N2-Wash	NH3		1981
Bharuch, India	Texaco, Oil		N2-Wash	NH3		1981
Himeji, Japan	Texaco, Oil		HYCO Linde CP	CO / H2		1980
Houston, Texas, USA	Texaco, Oil					1979
Houston Texas, USA	Hydrogen Rich Gas					1978
Modderfontain, South Africa	Koppers, Coal					1976
Darmstadt, Germany	Natural Gas					1972
Texas City, Texas, USA	Hydrogen Rich Gas					1971
Hicksville, NY, USA	Natural Gas					1971
Kütahya, Turkey	Winkler, Coal					1969
Los Angeles, USA	Texaco, Oil					1968
Monte Bello, California, USA	Texaco, Oil					1968
Greena, Denmark	Texaco, Oil					1964
Oulu, Finland	Texaco, Oil					1963

Linde's Plant Concept for the Odessa Project

Different Scenarios are considered for the Plant Design.

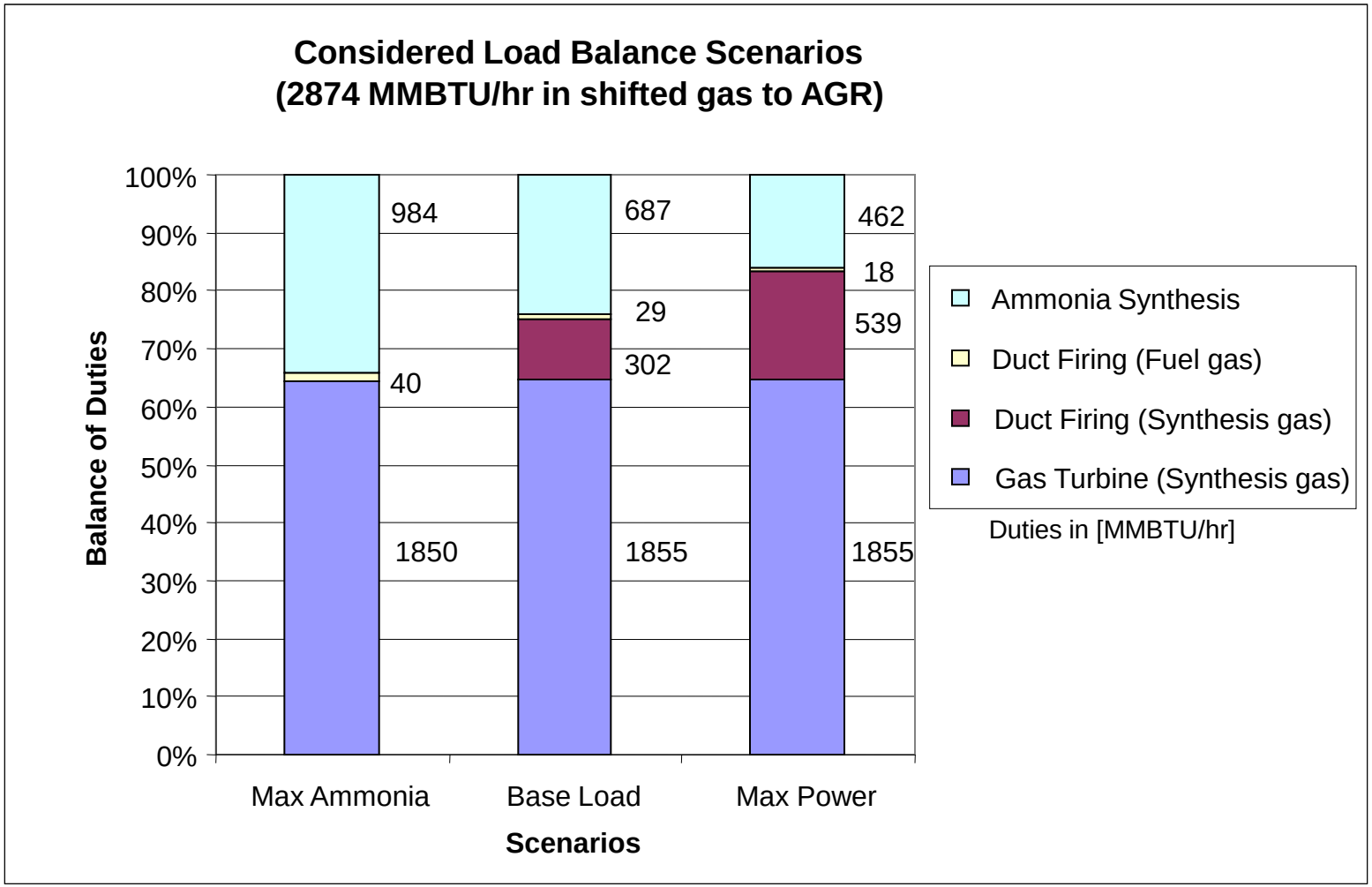

Linde's Plant Concept for the Odessa Project

Definition of Carbon Capture Efficiency (The Pathway of Carbon).

Definition of the carbon capture rate

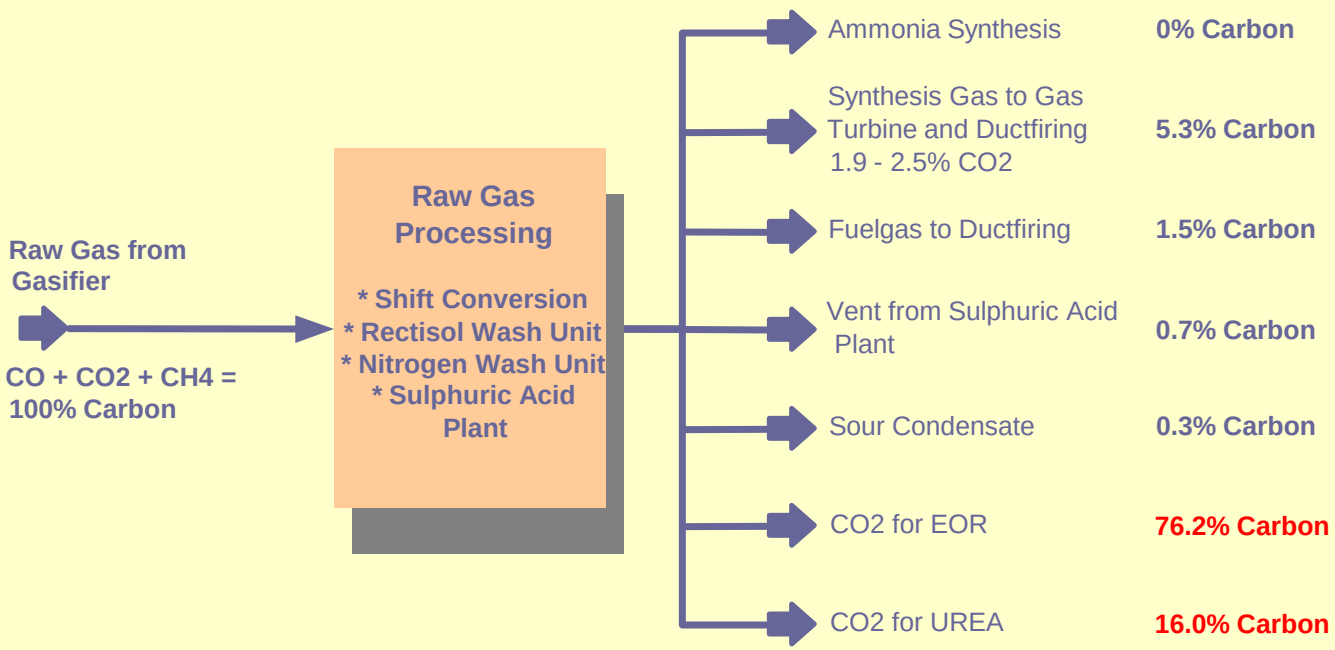

	EOR		UREA	
Scenario 1:	76.2%	+	16.0%	=
Scenario 2:	81.1%	+	11.1%	= constant = 92.2% Carbon Capture
Scenario 3:	84.7%	+	7.5%	=

Benefits for the proposed Plant Concept.

Benefits of the plant design

- Easy variation of the product range from max. ammonia to max. power plant
- No additional cooling for the NWU, due to cold syngas supply from the RWU
- Smallest purge stream due to high hydrogen recovery rate of the NWU resulting in a high efficiency of the power plant
- Reduced utility consumption figures due to enhanced heat integration of RWU and NWU
- No additional nitrogen consumption for TSA regeneration due to reusing the regeneration nitrogen as diluting agent

Linde's Plant Concept for the Odessa Project

With a CO Shift the amount of H2 in the Raw Gas can be Increased.

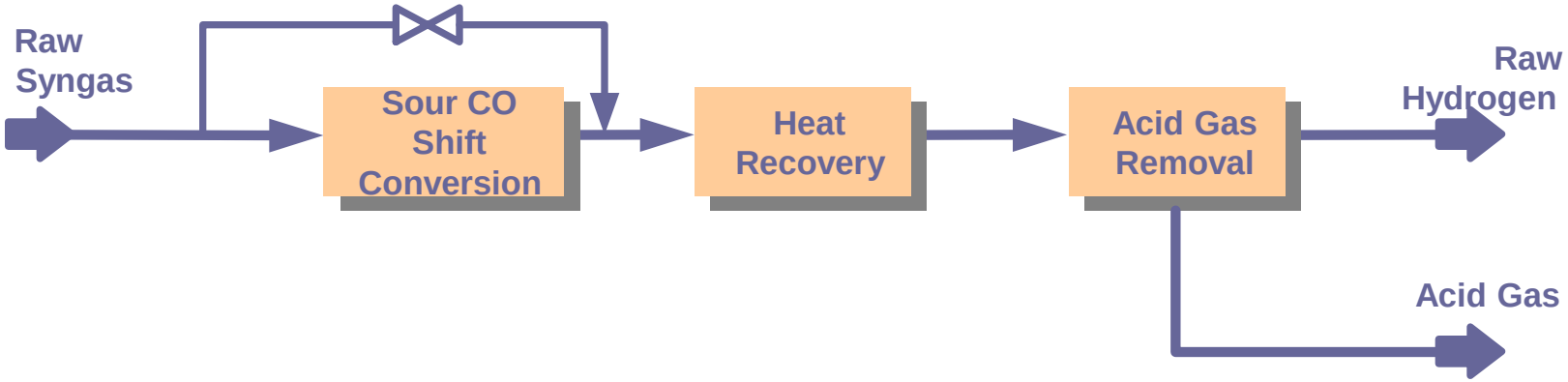

- CO is shifted to H2 according the following equation:
  $CO + H_2O \leftrightarrow CO_2 + H_2$
- The shift catalyst (CoMo type) is not poisoned by sulphur, even some sulphur is required in the syngas to keep the catalyst in active state
- Steam has to be added upstream of the CO shift (depending on the gasification process)
- Depending on the required CO conversion, the Shift Unit is single-stage with an optional bypass or a two-stage unit.

The Rectisol® Wash is a well Proven Wash Process.

What is Rectisol®?

- Rectisol® was developed jointly by Linde and Lurgi in the late 50th
- Rectisol® is a physical wash process where acid gas compounds are solved in methanol and thus removed from the syngas
- More than 55 Linde Rectisol® Units are engineered world wide
- Linde is owning and operating two running plants (Singapore and in the United States)
- Each Rectisol® Wash Unit is developed hand tailored for customers needs and requirements
- Linde is well experienced in handling of trace component
- Favourable Combination with Linde's Nitrogen Wash Unit

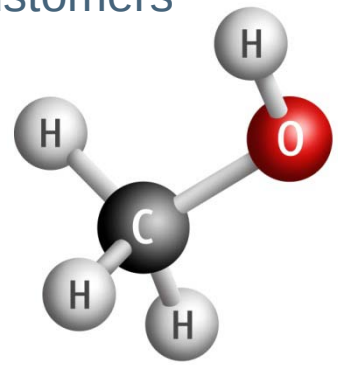

Methanol Molecule

Methanol is Good Characteristics for Acid Gas Removal.

Characteristics of methanol:

Methanol has favourable characteristics:

- Methanol is chemically and thermal stable no degradation products
- No solvent change during plant life time (no aging) vs Selexol, which needs to have solvent replacements due to aging over the years.
- Low corrosiveness
- No foaming
- Low solvent losses
- Methanol is a cheap and readily available Solvent
  - methanol: 1.8 to 2 $/gallon
  - selexol: 25 to 30 $/gallon (12 to 15 times more expensive)

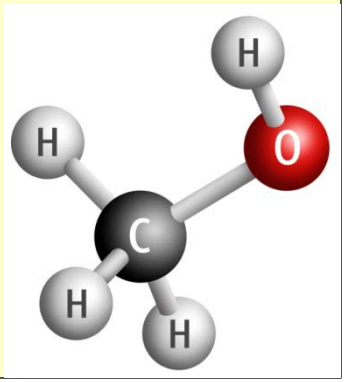

Linde's Plant Concept for the Odessa Project
The Rectisol® Process uses mainly Carbon Steel.

Carbon Steel Material can be used

Methanol has a non corrosive service. All product and off-gas streams like CO2 streams and H2S Fraction are free of water.

- Nearly all of the material can be made by carbon steel service.
- Most of the column internals can be made by carbon steel service.
- Especially for downstream piping and equipment for the CO2 streams (to UREA and for EOR) can be made by carbon steel service.

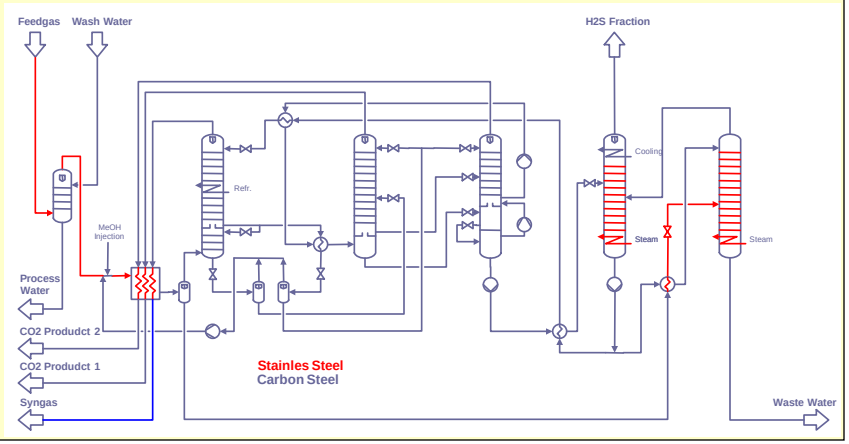

Linde's Plant Concept for the Odessa Project

The Wash Process consists of Four Major Sub-Units.

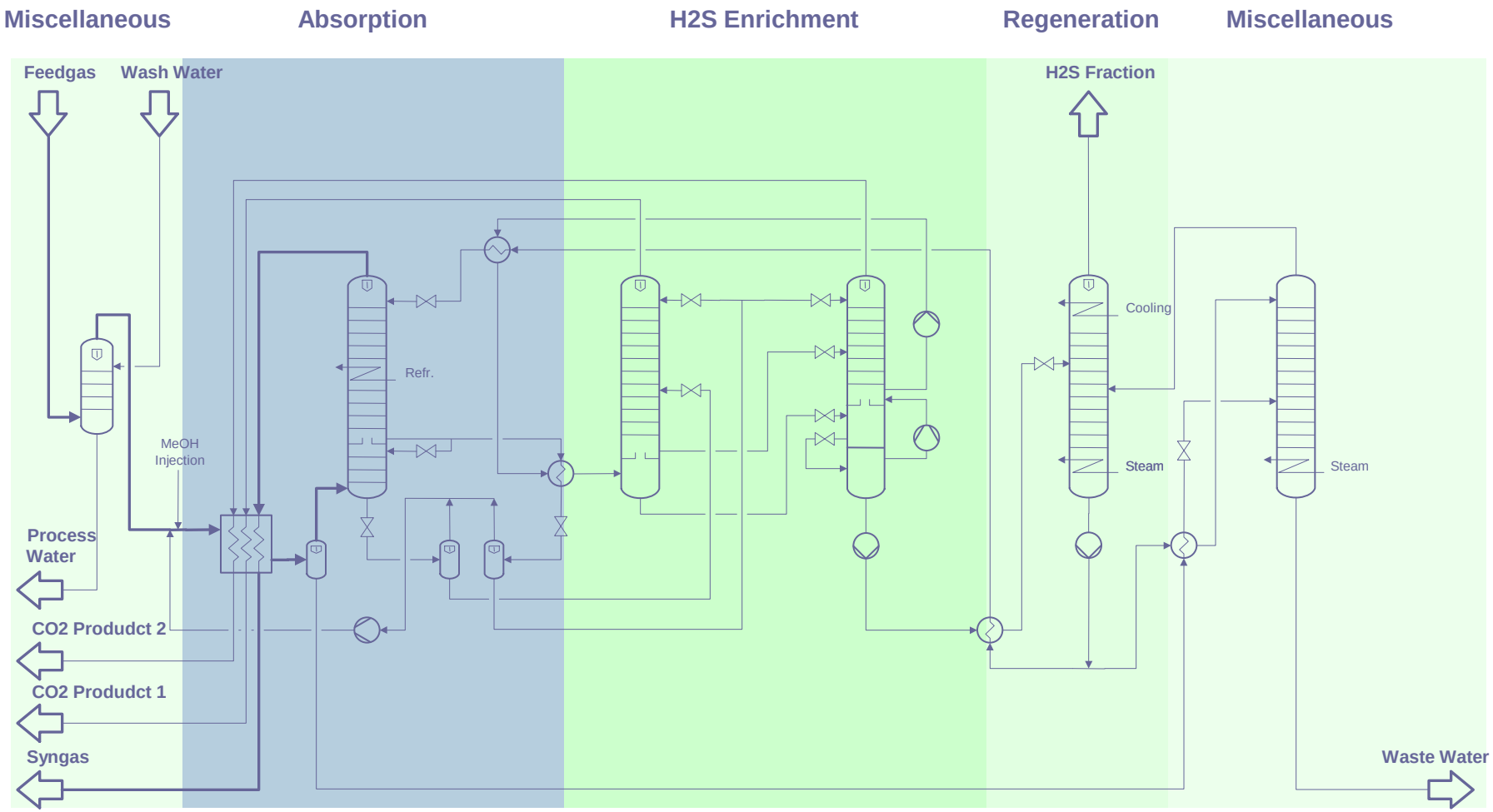

Highest Product Qualities can be Guaranteed.

Typical Product Qualities

	Purified Gas	CO2-Product	H2S-Fraction
CO2	< 5 vppm up to 5 mol%	≥ 98.5 mol%	
H2S + COS	< 0.1 vppm	2 – 10 mg/Nm³	Suitable for SRU/Claus
H2O	< 0.1 vppm	< 1 vppm	< 1 vppm
Methanol	15 – 30 vppm	250 – 300 vppm	
Pressure	Δp ~ 2 bar	1.7 – 3.3 bar(a)	1.5– 3.0 bar(a)

Linde Takes Care of Handling Trace Impurities and ensures reliable Plant Performance.

THE LINDE GROUP

Effect of Trace Components

- Product streams may be wasted and will not meet product specification
- Offgas streams may be wasted and will not meet environmental regulation
- Plugged equipment may cause operational problems, lead to plant shut down, and reduces the plant availability
- Corrosion may occur and lead to equipment/ piping exchange
- People can be harmed and the environment can be polluted

⇒ **Even small amounts of trace components can have a negative effect on the performance of the plant and on environment**

Linde's Rectisol® Process can favourably be Combined with the Nitrogen Wash.

Key Process Figures for the Nitrogen Wash Unit (max. Ammonia Case):

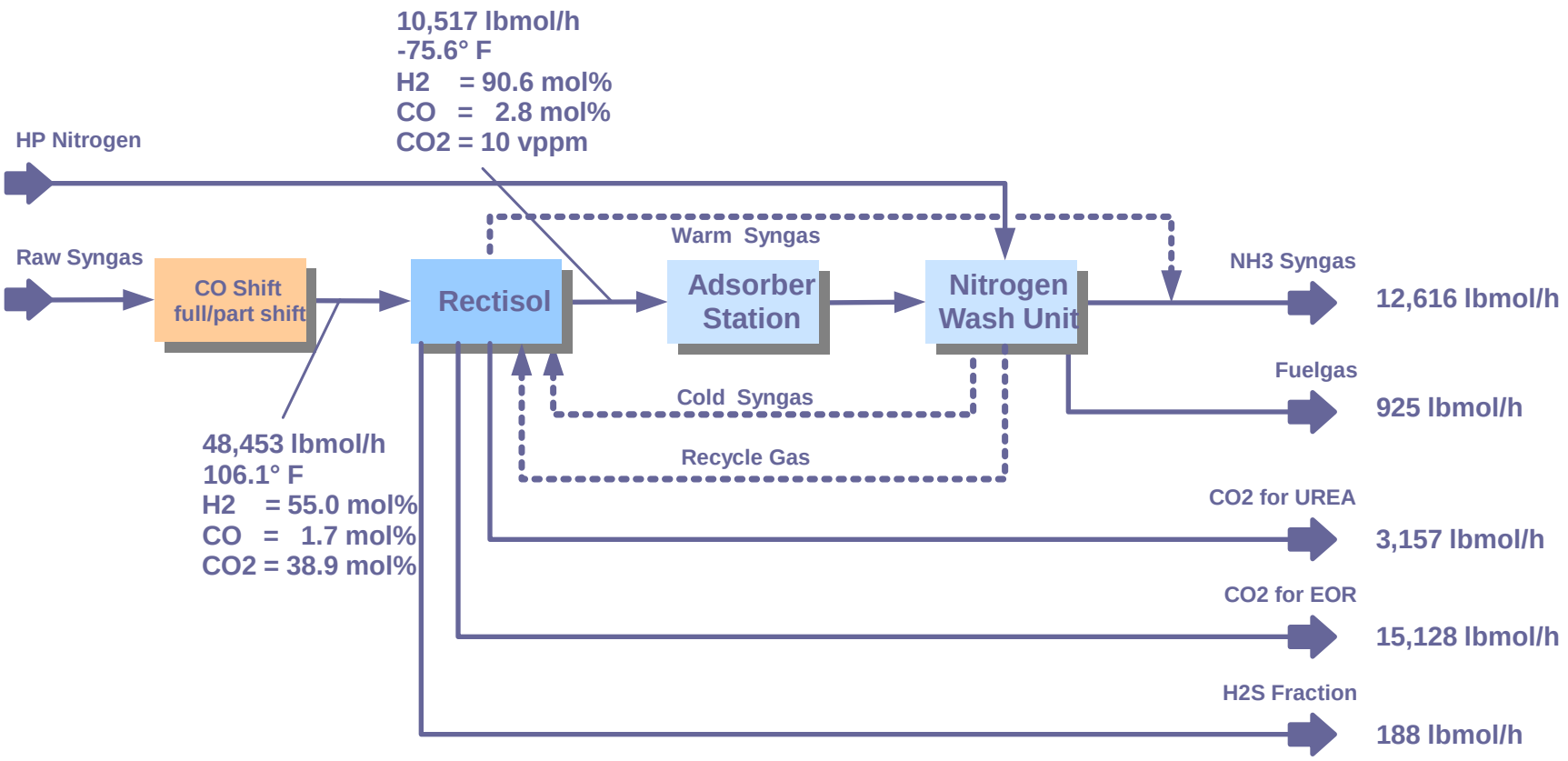

Linde's Plant Concept for the Odessa Project

Linde's Process Concept for Design of the Temperature Swing Adsorption and Nitrogen Wash.

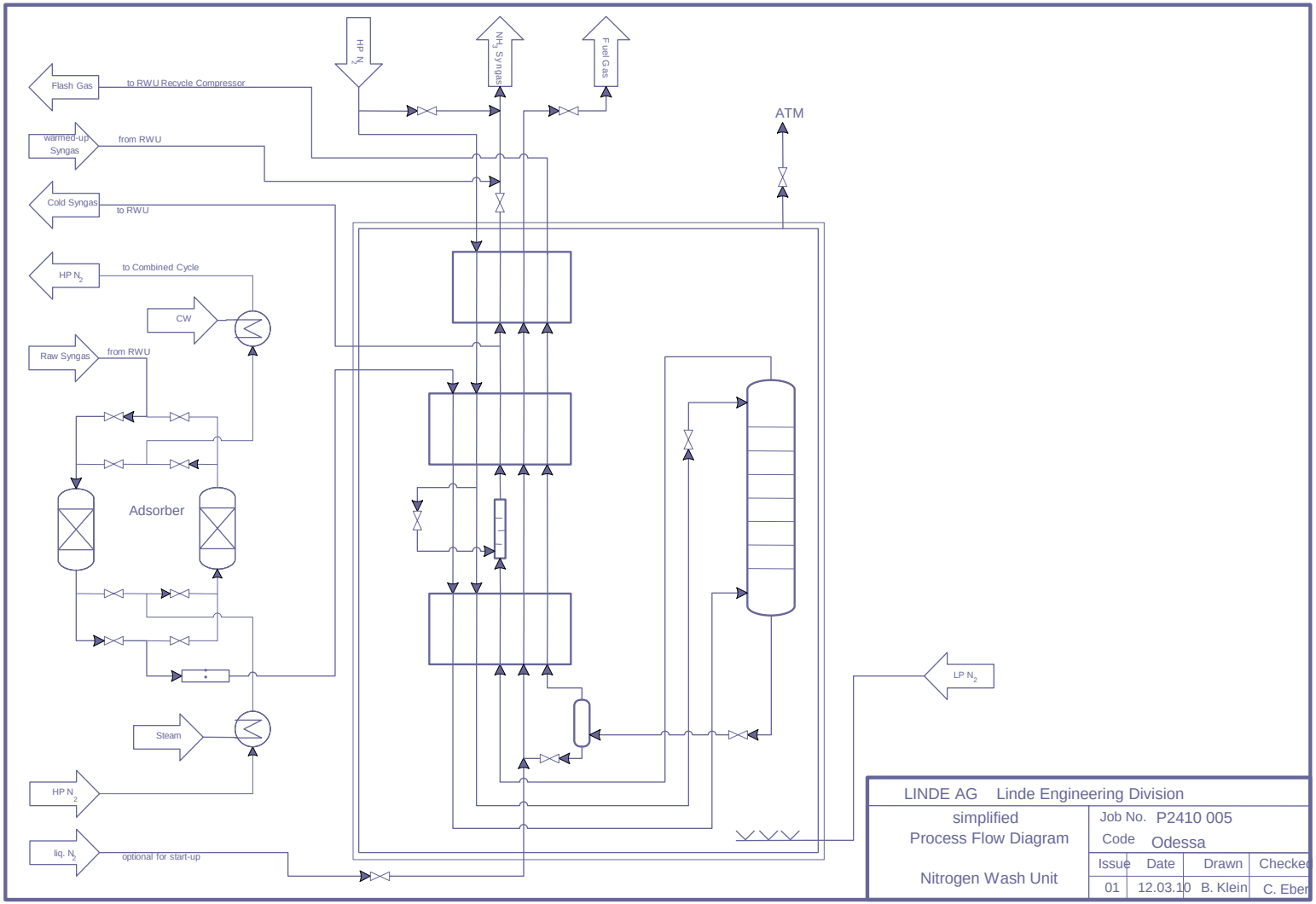

The Nitrogen Wash Unit offers high Advantages.

THE LINDE GROUP

Advantages of the Nitrogen Wash Unit

- Removal of CO which poisons the ammonia synthesis catalyst
  → Long operation of catalyst
- Removal of inert components, e.g. CH4
  → No accumulation of inert gases in synthesis loop
  → No purge gas from ammonia synthesis, hence no syngas loss
- Addition of required amount of nitrogen to the hydrogen stream
  → Feed gas for ammonia synthesis: ratio H2/N2 = 3 mol/1mol
- No rotating equipment like pumps, compressors, etc.
- No corrosion problems
- Simple plant operation and reliable performance
- Excellent tolerance against fluctuations of flow and composition

Summary of the Nitrogen Wash Unit.

Summary

- Linde can offer high quality package unit for the TSA and NWU
  – the equipment is manufactured and assembled in Linde's own workshop.
  – Proven Design of the Adsorber Station which is mandatory for reliable NWU operation.
- The NWU will be prefabricated as a Cold Box based on Linde's long-term design know-how and manufacturing experience.
- The NWU is a process easy to operate and with excellent flexibility to feed fluctuations.
- The NWU is a simple and reliable process with no rotating equipment.
- A hydrogen recovery efficiency of approximately 99.5% and higher is achieved.
- A high purified gas is fed to the Ammonia Synthesis, which results in a extended catalyst life.
- Optimum process selection with regard to investment and operating cost.