APECS Applications at Alstom Power: Past and Present

NETL 2009 Workshop on Advanced Process Engineering Co-Simulation (APECS)

David Sloan

Pittsburgh, PA, 20-21 Oct 2009

POWER | ALSTOM

Agenda

Topic 1 Vision-21 Program (Phase I)

Topic 2 APECS Program (Phase II)

Topic 3 APECS Oxy-Firing/Chemical Looping Combustion

© Alstom 2009. All rights reserved. Information contained in this document is provided without liability for information purposes only and is subject to change without notice. No representation or warranty is given or to be implied as to the completeness of information or fitness for any particular purpose. Reproduction, use or disclosure to third parties, without express written authority, is strictly prohibited.

Vision 21 (Phase I) Project

- NETL Cooperative Agreement (Oct 2000 through Dec 2004)
- Goal: Develop software infrastructure for enabling *Virtual Simulation* of advanced power plants

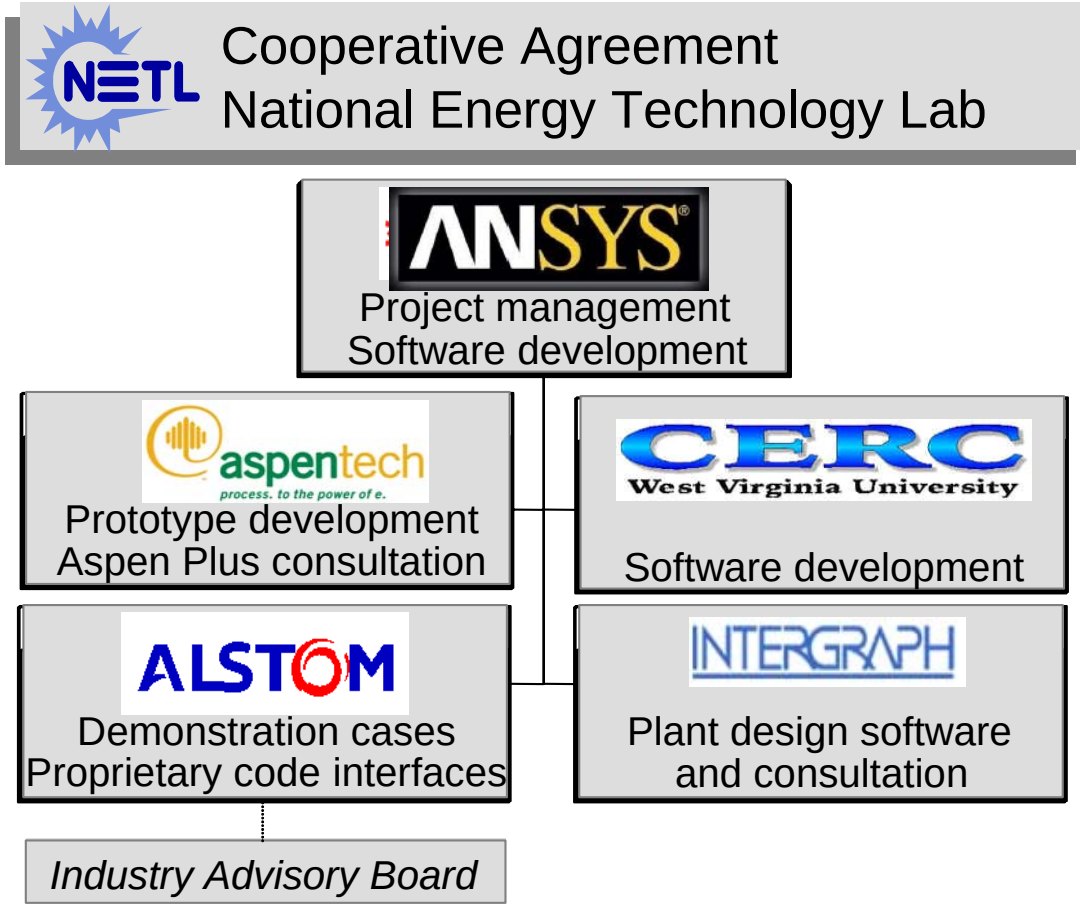

© Alstom 2009. All rights reserved. Information contained in this document is provided without liability for information purposes only and is subject to change without notice. No representation or warranty is given or to be implied as to the completeness of information or fitness for any particular purpose. Reproduction, use or disclosure to third parties, without express written authority, is strictly prohibited.

Integrated Component and Process Modeling

ALSTOM

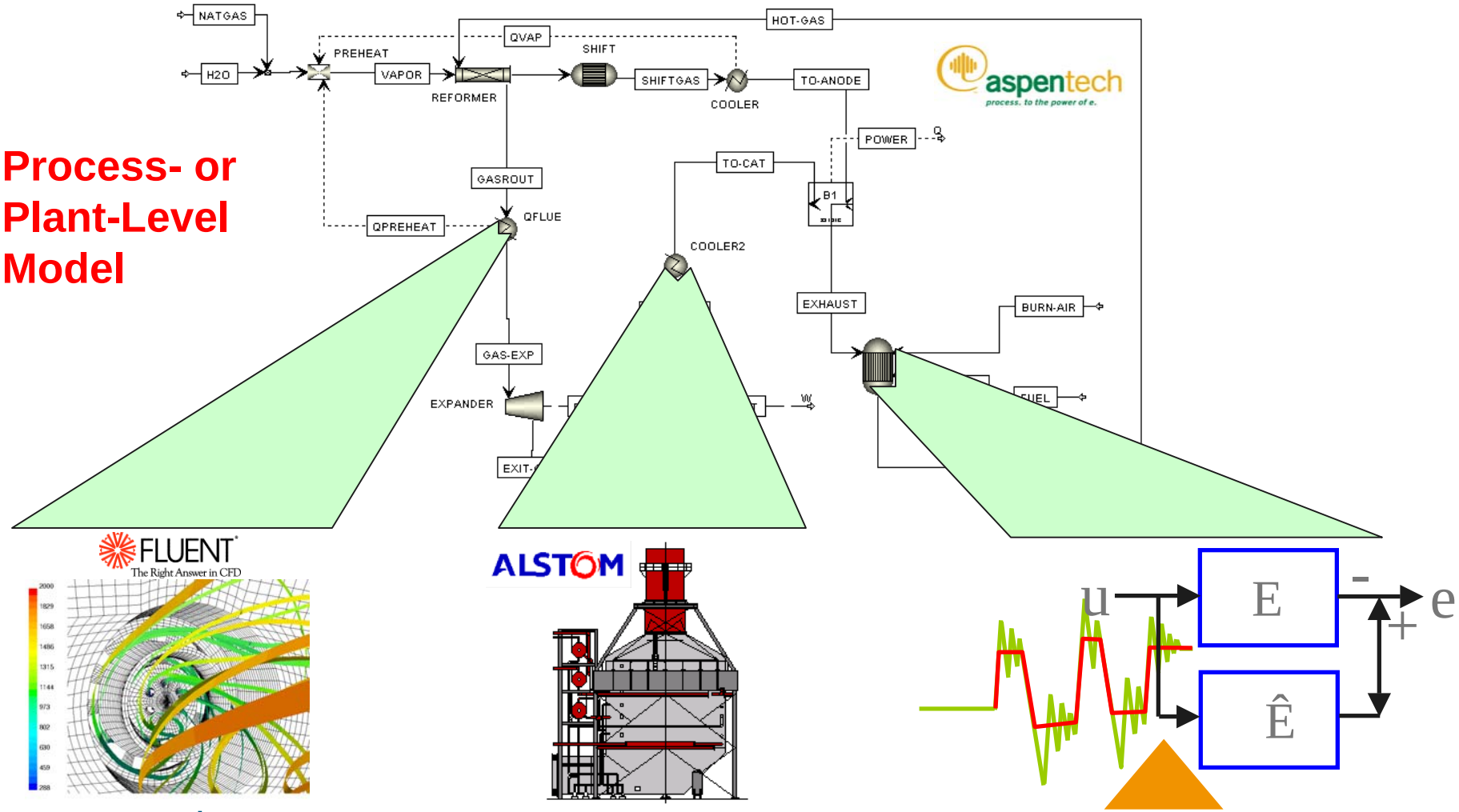

Process- or Plant-Level Model

CFD Packages

Industrial Codes

Reduced Order Models (ROMs)

Component- or Equipment-Level Models

© Alstom 2009. All rights reserved. Information contained in this document is provided without liability for information purposes only and is subject to change without notice. No representation or warranty is given or to be implied as to the completeness of information or fitness for any particular purpose. Reproduction, use or disclosure to third parties, without express written authority, is strictly prohibited.

APECS Development Background
Phase I: Alstom Contribution

- Advisory board meetings
- Debug and showcase the technology through demonstration cases

Aspen Plus Process Model	Higher Fidelity Equipment Item	Third-Party Software Used for Equipment Item
[Demo 1:] A conventional steam cycle of a 30 MWe coal-fired power plant for municipal electricity generation	Industrial boiler	• In-house design code • CFD (FLUENT)
[Demo 2:] A 270 MWe, natural gas-fired, combined cycle (NGCC) power plant	Heat recovery steam generator (HRSG)	• In-house design code • CFD (FLUENT)
[Demo 3:] A 250 MWe FutureGen integrated gasification, combined cycle (IGCC) power plant	Heat recovery steam generator (HRSG)	CFD (FLUENT)

© Alstom 2009. All rights reserved. Information contained in this document is provided without liability for information purposes only and is subject to change without notice. No representation or warranty is given or to be implied as to the completeness of information or fitness for any particular purpose. Reproduction, use or disclosure to third parties, without express written authority, is strictly prohibited.

Phase I: Vision 21 Demonstration Cases

- 33 MWe Steam Cycle

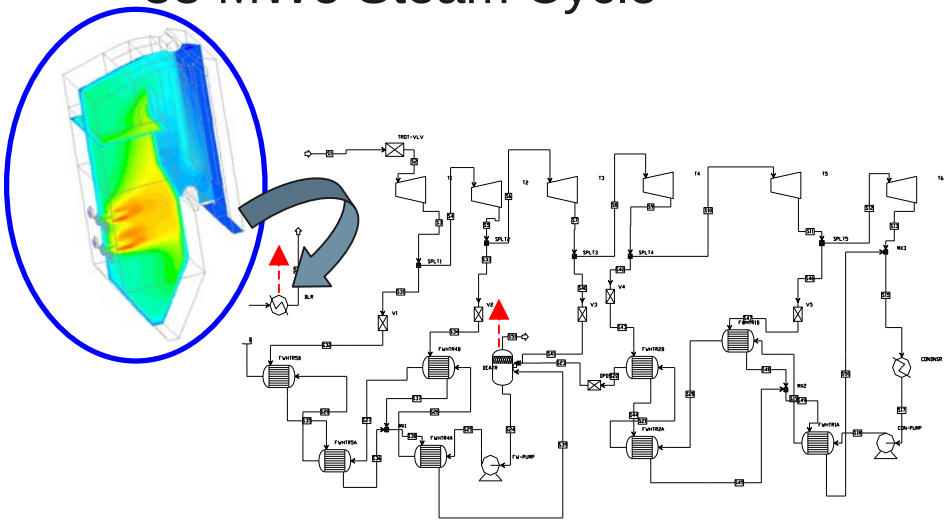

- 270 MWe NGCC

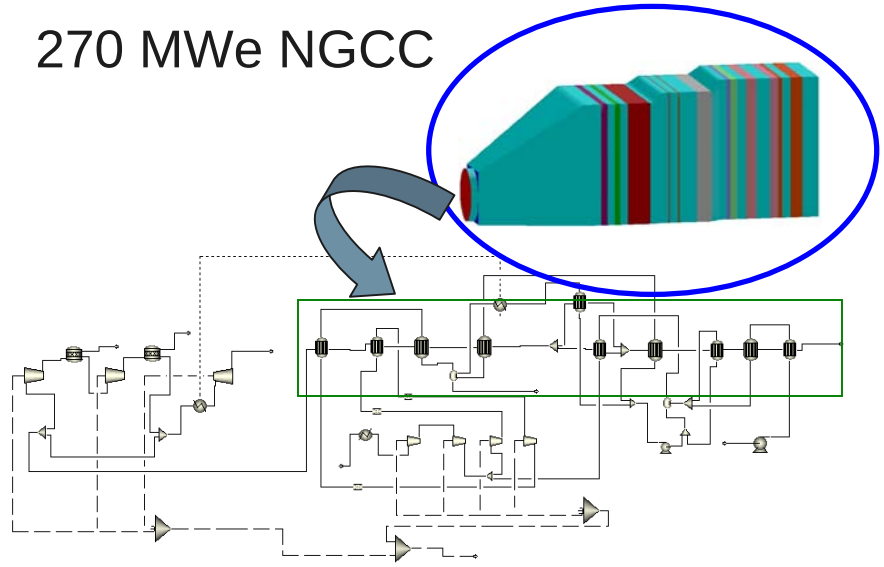

- Demonstration of *APECS* interfaces and wrappers:
  - proprietary models
  - CFD – FLUENT
- Run over PC or LAN

- 250 MWe FutureGen IGCC

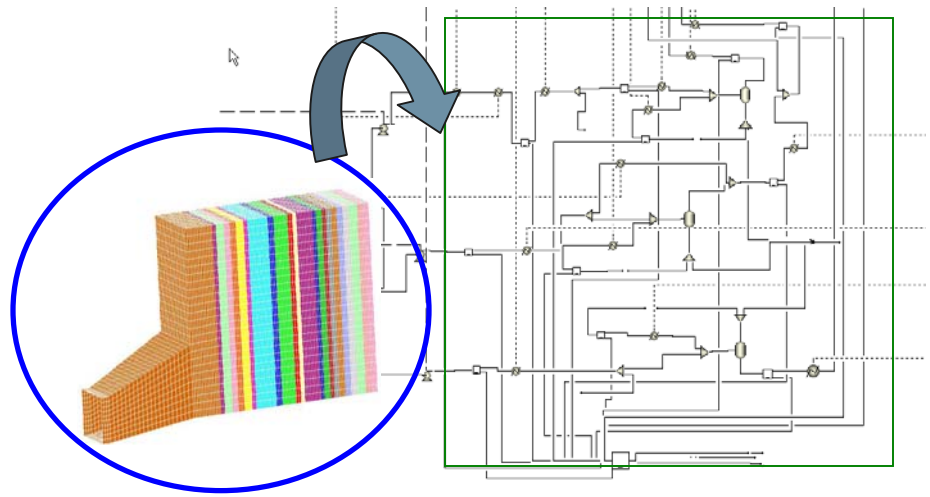

© Alstom 2009. All rights reserved. Information contained in this document is provided without liability for information purposes only and is subject to change without notice. No representation or warranty is given or to be implied as to the completeness of information or fitness for any particular purpose. Reproduction, use or disclosure to third parties, without express written authority, is strictly prohibited.

Demonstration Case 1
Conventional Steam Cycle

- Relatively "simple" conventional steam cycle

- Municipal power plant
  - 33 MWe
  - coal-fired
  - front wall-fired, balanced draft, natural circulation steam generator
  - air preheater
  - steam turbine
  - closed feedwater heaters

- Simulations:
  - Run 1: Aspen Plus cycle
  - Run 2: Proprietary code
  - Run 3: FLUENT

33 MWe Municipal Power Plant

© Alstom 2009. All rights reserved. Information contained in this document is provided without liability for information purposes only and is subject to change without notice. No representation or warranty is given or to be implied as to the completeness of information or fitness for any particular purpose. Reproduction, use or disclosure to third parties, without express written authority, is strictly prohibited.

Case 1: Run 2: BPS-Aspen Coupling
Legacy Code Instantiation

ALSTOM

Replace gas-side island with BPS

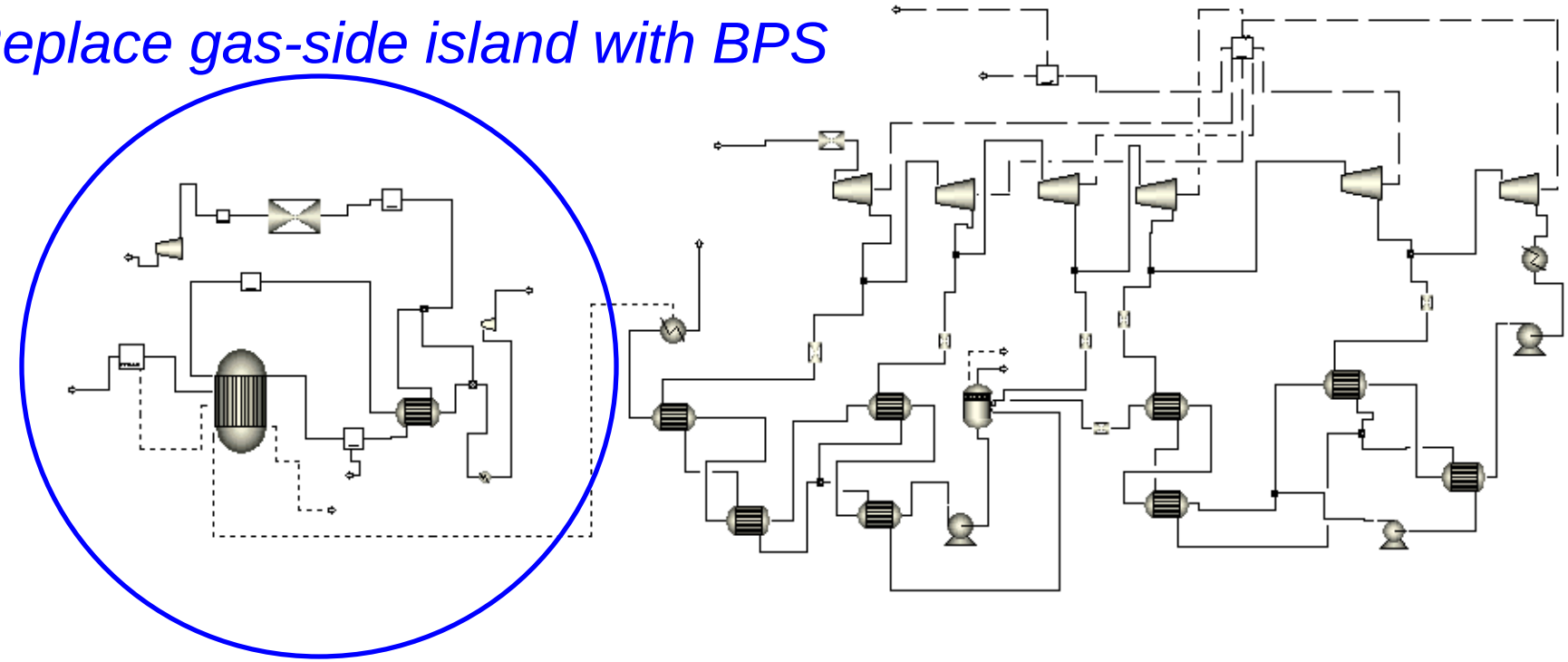

- Wrapper overwrites input file, spawns BPS executable, and reads output file
- CAPE-OPEN compliant wrapper template provided by Fluent (now ANSYS) Inc.
- 3 man-weeks required for coding
- Wrapper implemented as dynamic link library (.dll)

© Alstom 2009. All rights reserved. Information contained in this document is provided without liability for information purposes only and is subject to change without notice. No representation or warranty is given or to be implied as to the completeness of information or fitness for any particular purpose. Reproduction, use or disclosure to third parties, without express written authority, is strictly prohibited.

Case 1: Run 2: BPS-Aspen Coupling
Final Results for Control Parameters

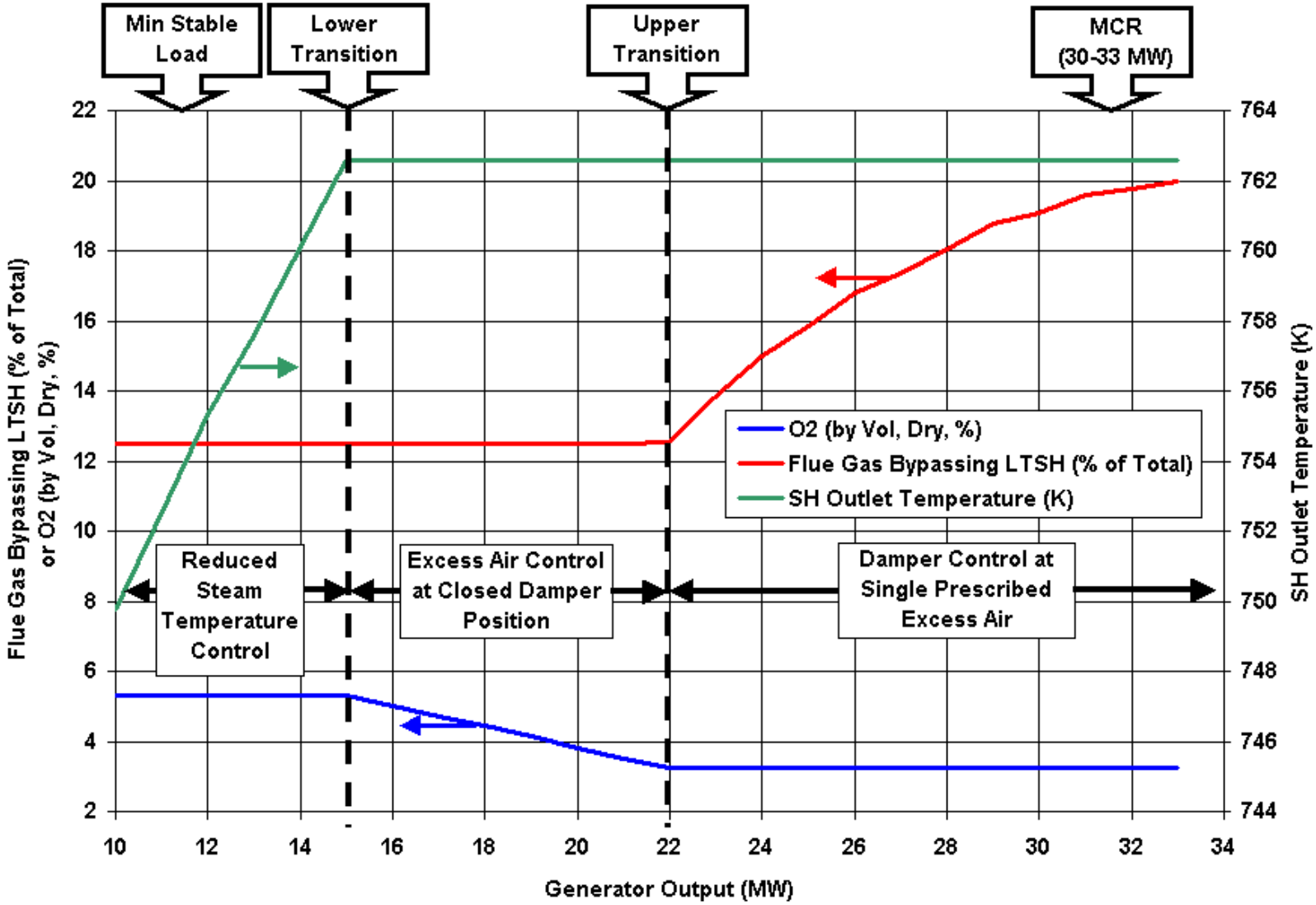

© Alstom 2009. All rights reserved. Information contained in this document is provided without liability for information purposes only and is subject to change without notice. No representation or warranty is given or to be implied as to the completeness of information or fitness for any particular purpose. Reproduction, use or disclosure to third parties, without express written authority, is strictly prohibited.

Case 1: Run 2: BPS-Aspen Coupling
Final Results - Flow Rates

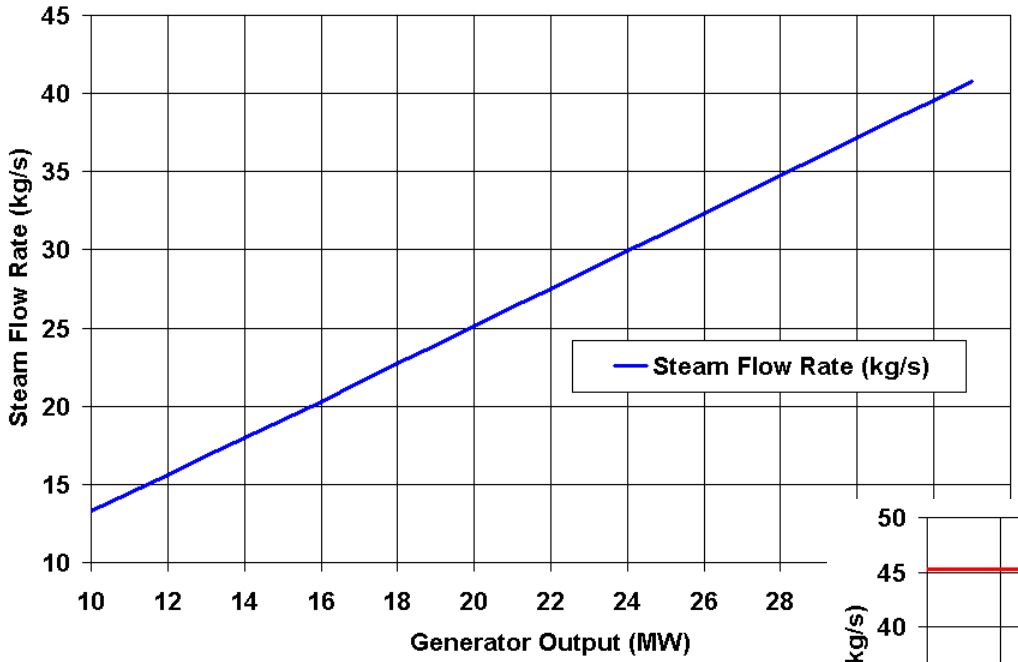

- 19 CO parameters exchanged

- Run times on the order of 1 minute per load point

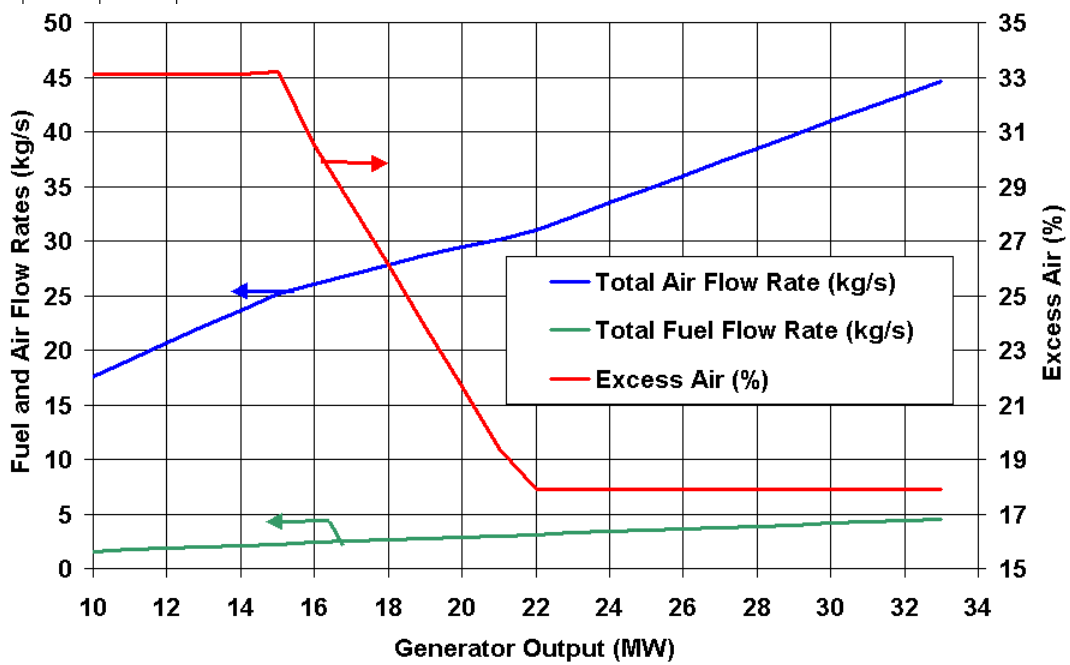

© Alstom 2009. All rights reserved. Information contained in this document is provided without liability for information purposes only and is subject to change without notice. No representation or warranty is given or to be implied as to the completeness of information or fitness for any particular purpose. Reproduction, use or disclosure to third parties, without express written authority, is strictly prohibited.

Case 1: Run 3: CFD-Aspen Coupling
Additional Port Types Required

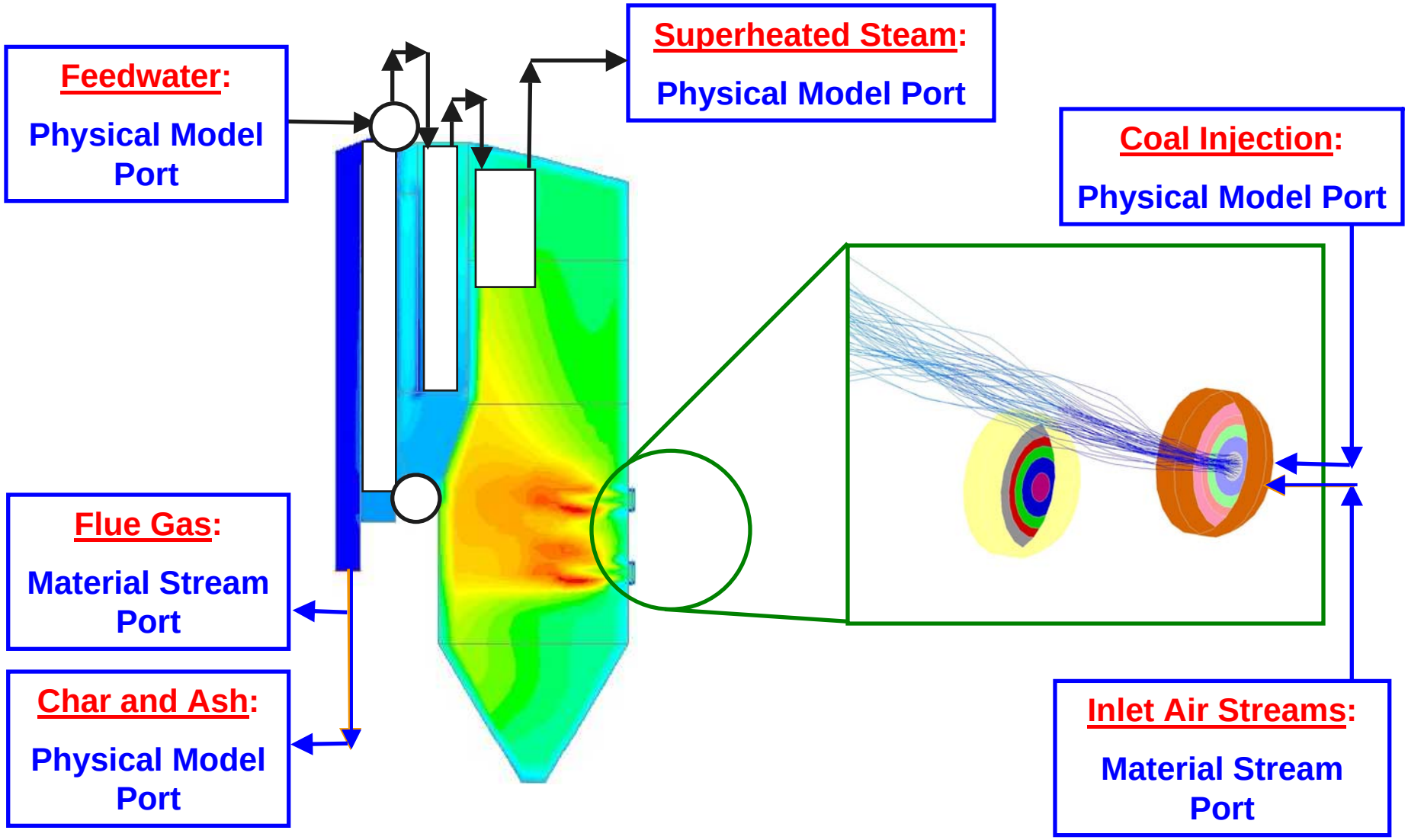

© Alstom 2009. All rights reserved. Information contained in this document is provided without liability for information purposes only and is subject to change without notice. No representation or warranty is given or to be implied as to the completeness of information or fitness for any particular purpose. Reproduction, use or disclosure to third parties, without express written authority, is strictly prohibited.

Case 1: Run 3: CFD-Aspen Coupling
Additional Port Types Accommodated

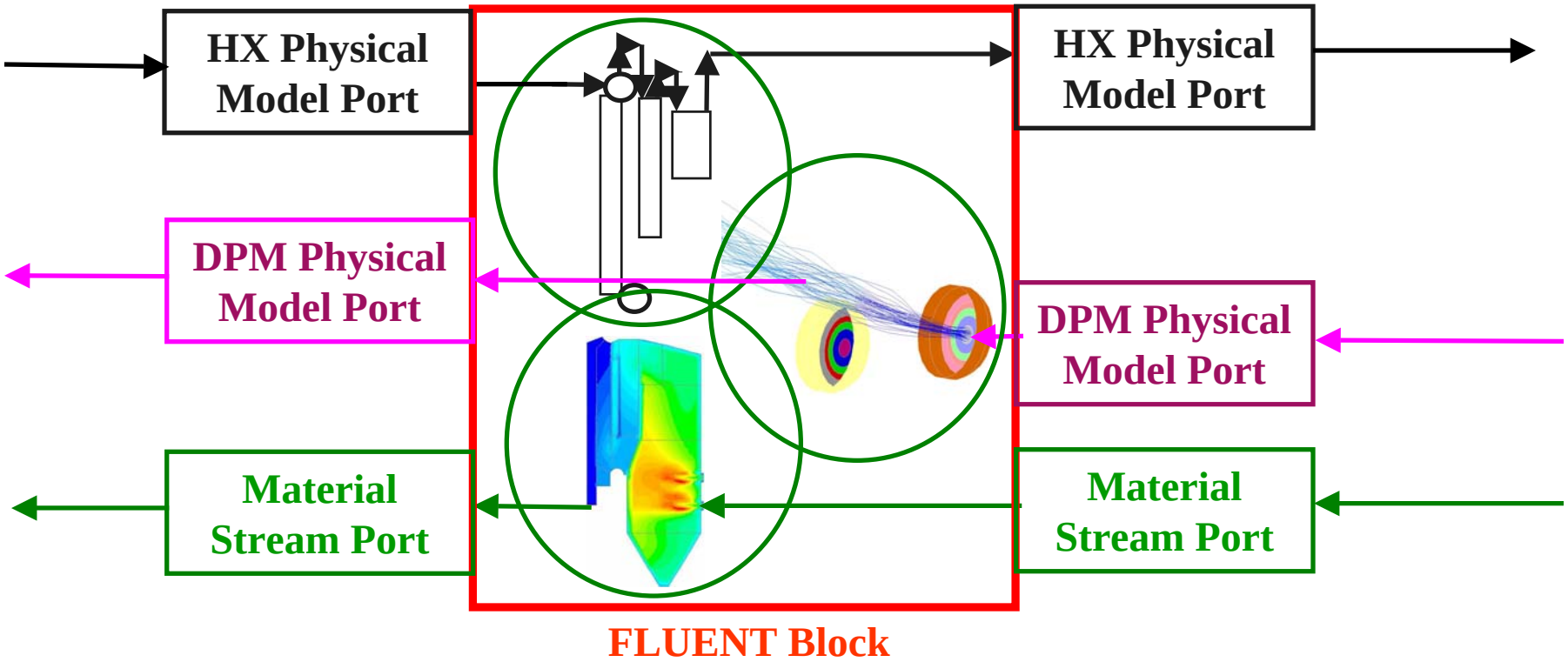

- "Physical model" ports for generic, tube bank HX, and DPM models added to the APECS software
- Aspen Plus process streams can be connected directly to the HX and DPM submodels in an instantiated FLUENT block

© Alstom 2009. All rights reserved. Information contained in this document is provided without liability for information purposes only and is subject to change without notice. No representation or warranty is given or to be implied as to the completeness of information or fitness for any particular purpose. Reproduction, use or disclosure to third parties, without express written authority, is strictly prohibited.

Case 1: Run 3: CFD-Aspen Coupling
26, 24 MW: Design Spec Iterations

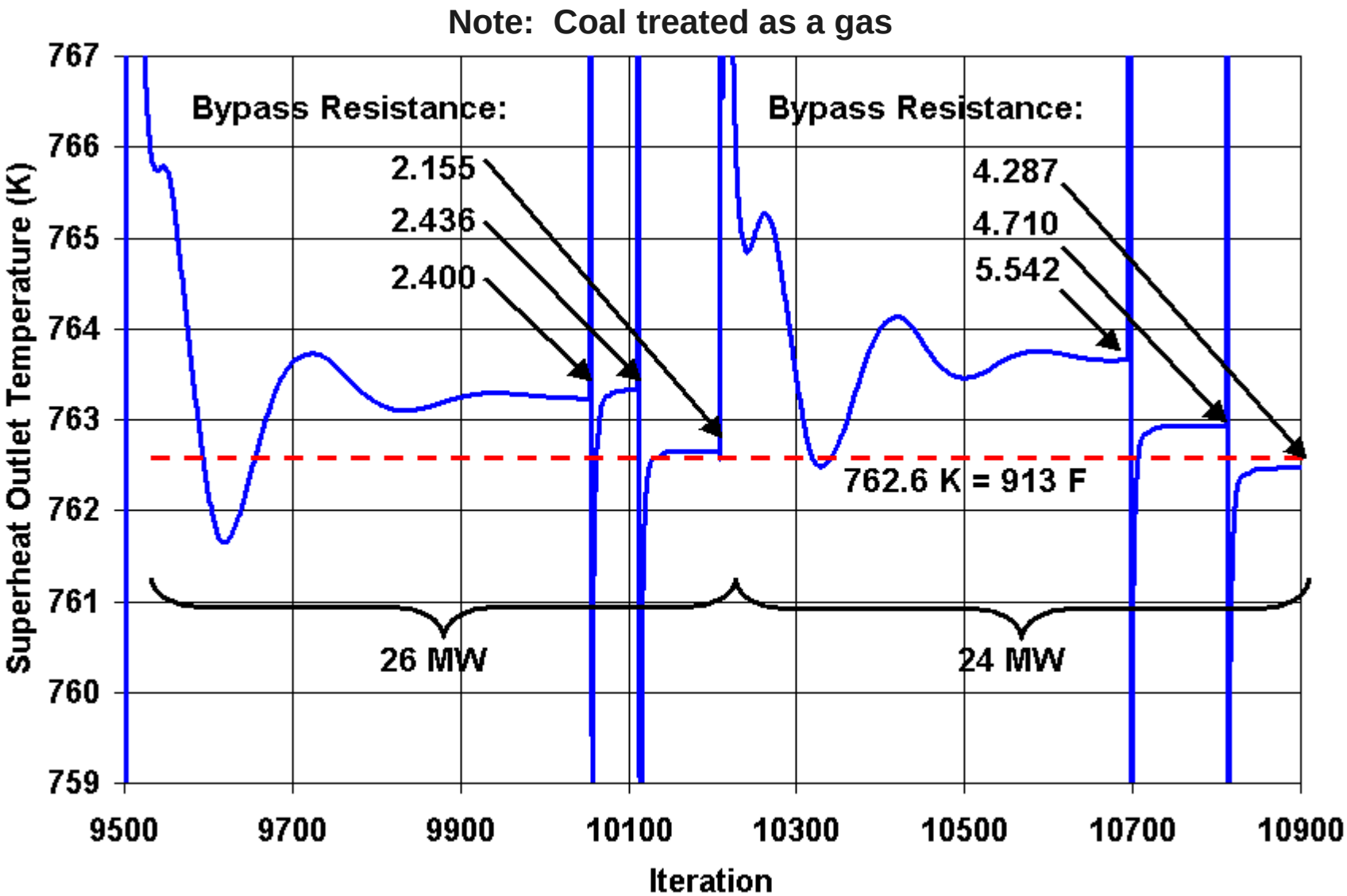

© Alstom 2009. All rights reserved. Information contained in this document is provided without liability for information purposes only and is subject to change without notice. No representation or warranty is given or to be implied as to the completeness of information or fitness for any particular purpose. Reproduction, use or disclosure to third parties, without express written authority, is strictly prohibited.

Case 1: Run 3: CFD-Aspen Coupling
Final Results - Flow Rates

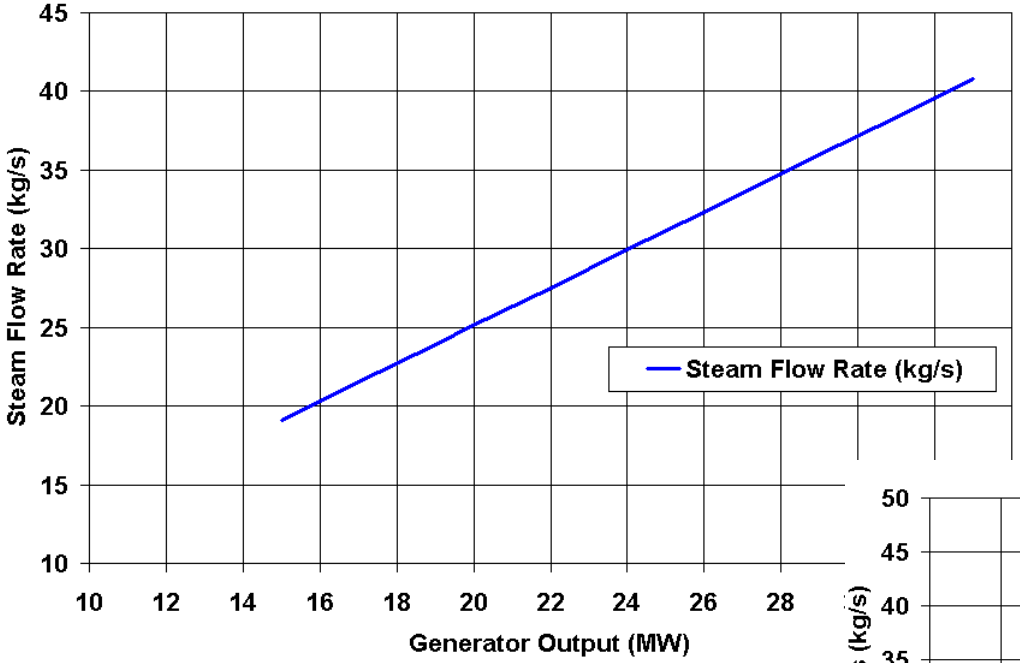

- 25 material stream connections

- 19 CAPE-OPEN parameters exchanged

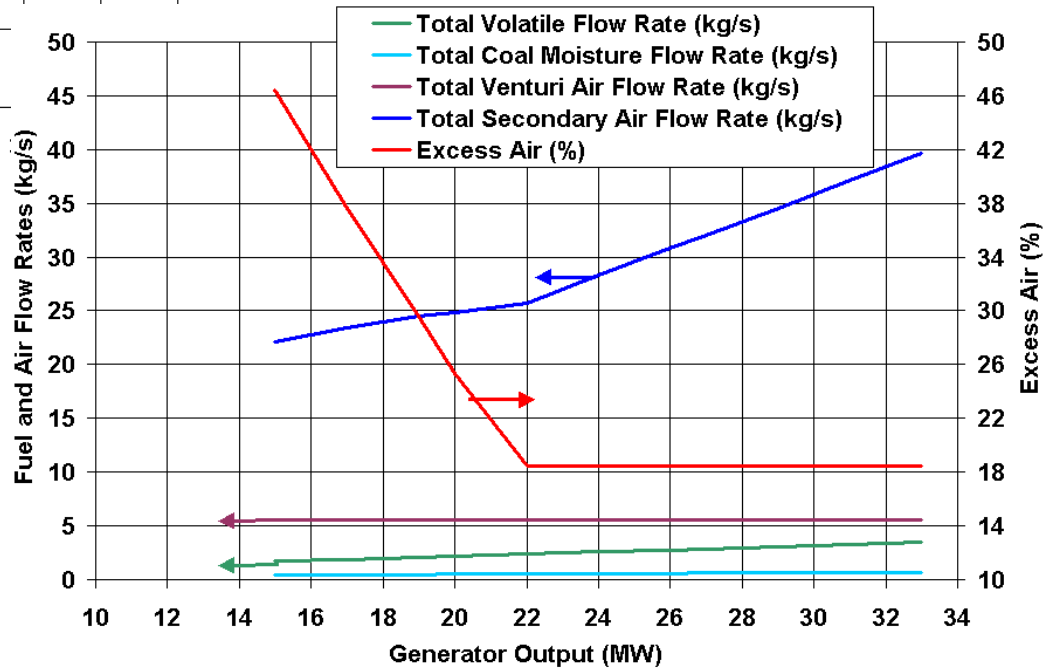

© Alstom 2009. All rights reserved. Information contained in this document is provided without liability for information purposes only and is subject to change without notice. No representation or warranty is given or to be implied as to the completeness of information or fitness for any particular purpose. Reproduction, use or disclosure to third parties, without express written authority, is strictly prohibited.

Demonstration Case 2
Natural Gas Combined Cycle

- Combined cycle power plant
  - 270 MWe
  - natural gas-fired
  - gas turbine
  - steam turbine
  - heat recovery steam generator (HRSG)

- HRSG
  - high pressure (HP)
  - low pressure (LP)
  - reheat (RH)

- Simulations:
  - Run 1: Aspen Plus cycle
  - Run 2: Proprietary code
  - Run 3: FLUENT

270 MWe Combined Cycle Power Plant

© Alstom 2009. All rights reserved. Information contained in this document is provided without liability for information purposes only and is subject to change without notice. No representation or warranty is given or to be implied as to the completeness of information or fitness for any particular purpose. Reproduction, use or disclosure to third parties, without express written authority, is strictly prohibited.

Case 2: CFD-Aspen Coupling
HRSG Geometry

- ~40,000 cells

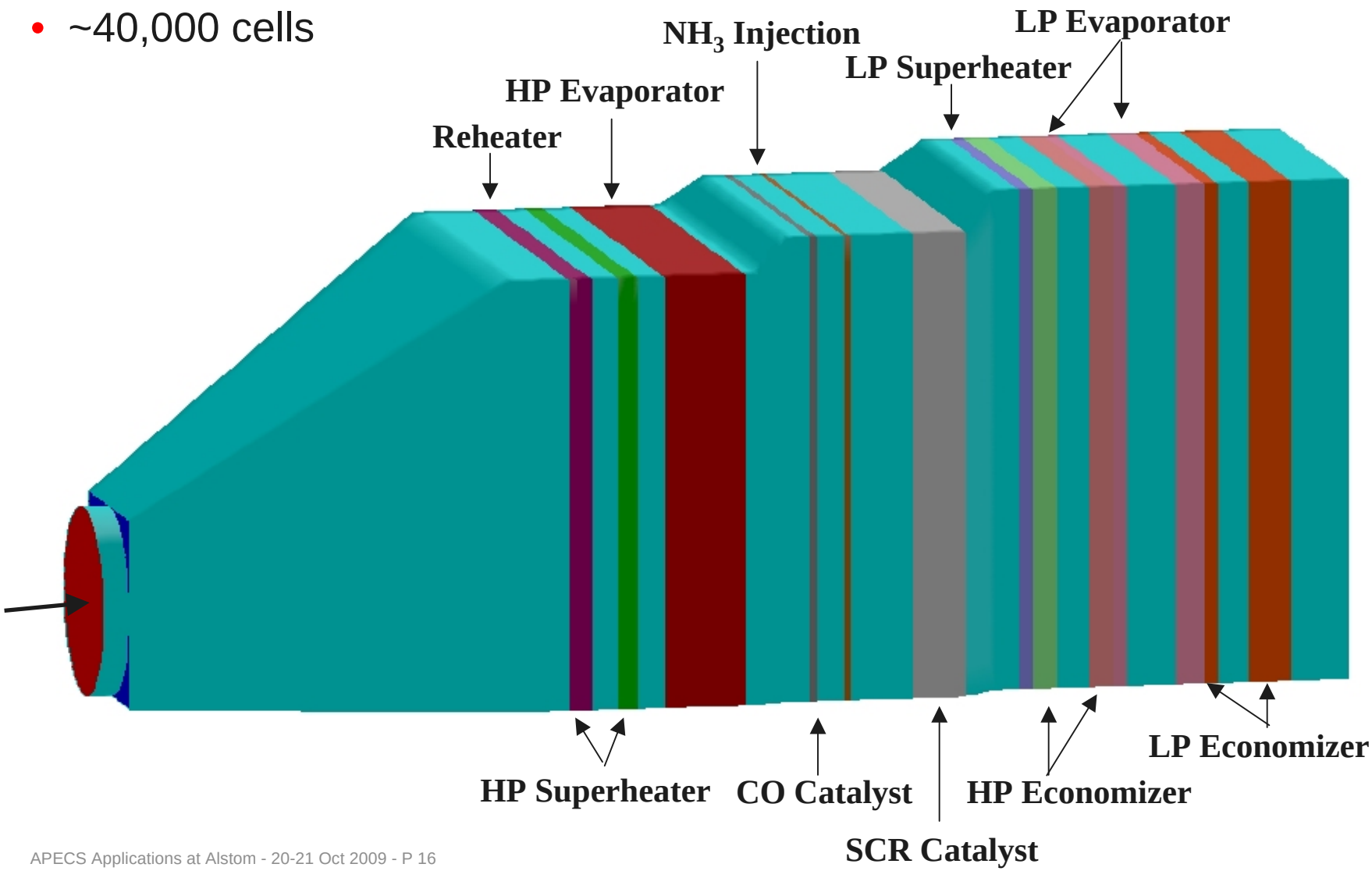

© Alstom 2009. All rights reserved. Information contained in this document is provided without liability for information purposes only and is subject to change without notice. No representation or warranty is given or to be implied as to the completeness of information or fitness for any particular purpose. Reproduction, use or disclosure to third parties, without express written authority, is strictly prohibited.

Case 2: Run 2: HRSGPS-Aspen Coupling

Coupling with HRSGPS

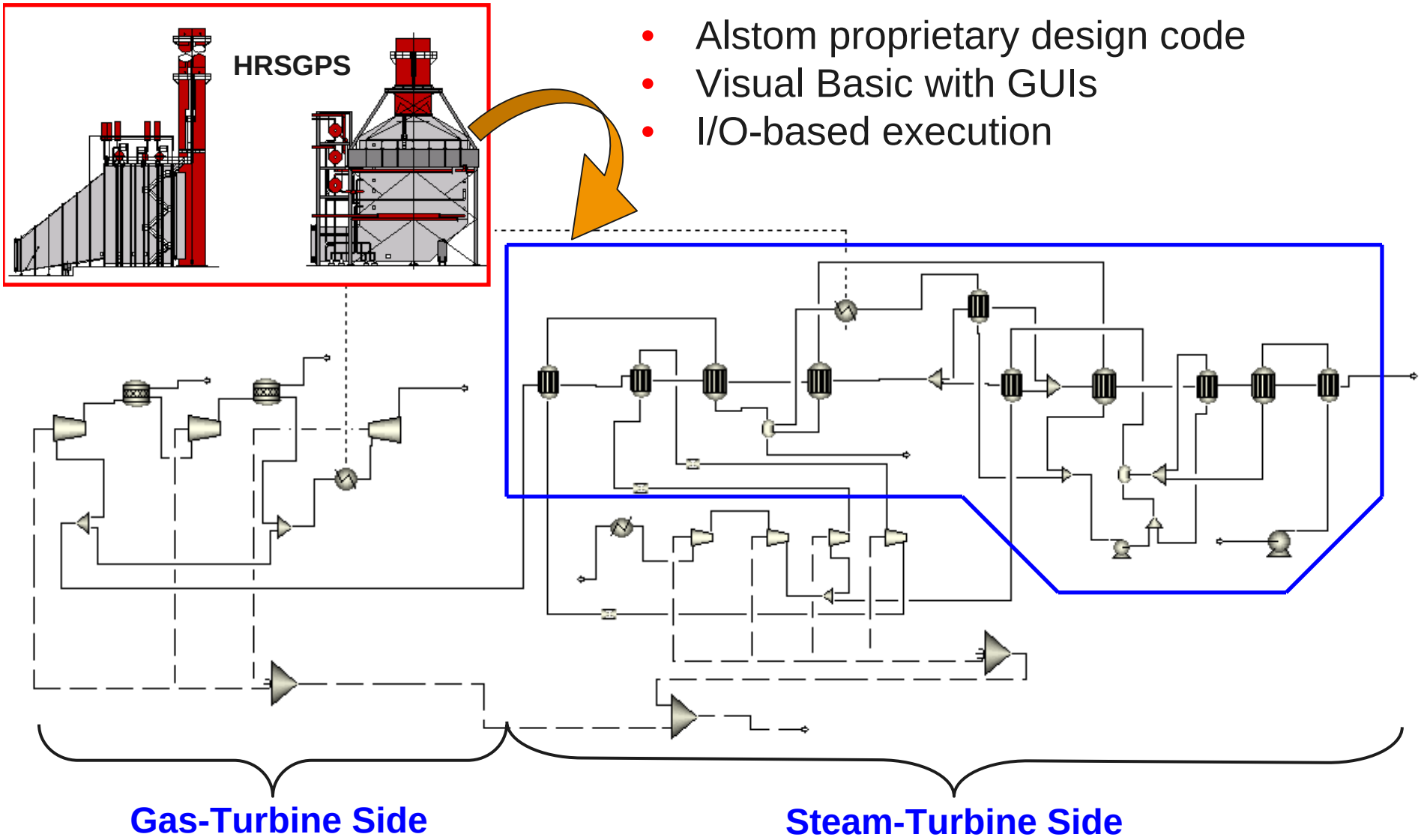

- Alstom proprietary design code
- Visual Basic with GUIs
- I/O-based execution

© Alstom 2009. All rights reserved. Information contained in this document is provided without liability for information purposes only and is subject to change without notice. No representation or warranty is given or to be implied as to the completeness of information or fitness for any particular purpose. Reproduction, use or disclosure to third parties, without express written authority, is strictly prohibited.

Case 2: Run 2: HRSGPS-Aspen Coupling
Variable Communications

- HRSGPS converted to batch execution
- After reading its primary input file, HRSGPS reads CORBA parameter values (from “list file”) directly into memory

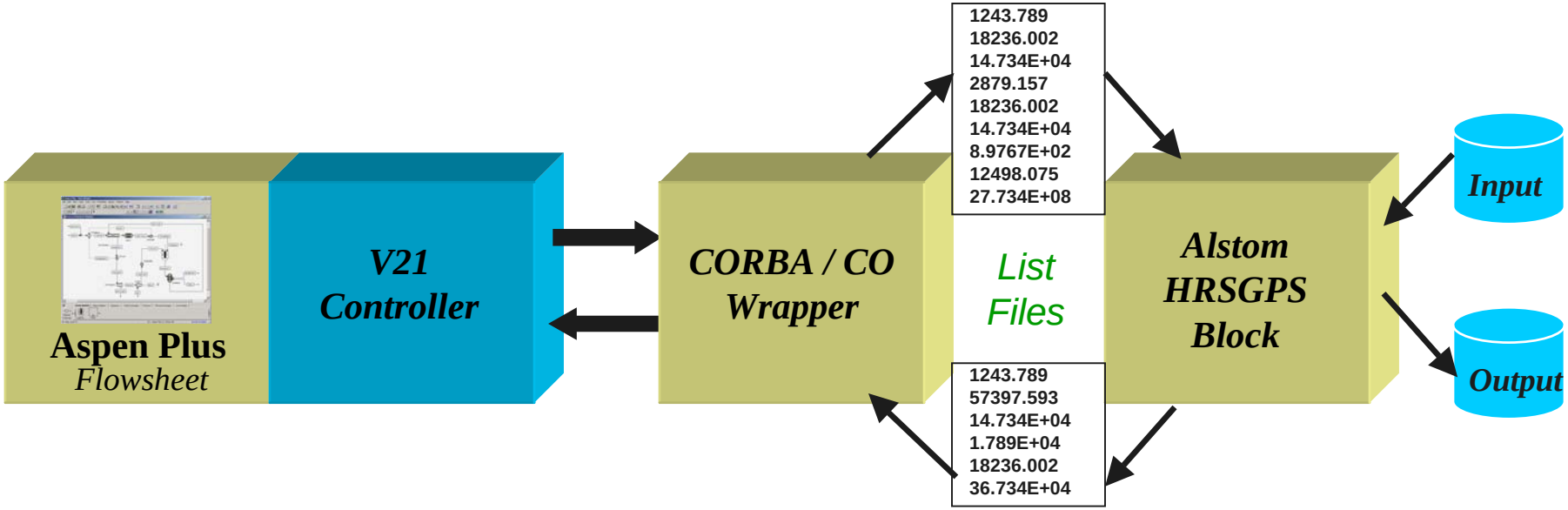

- Following execution, HRSGPS produces an output file, as well as “list file” of parameter values which is read by the Wrapper.

© Alstom 2009. All rights reserved. Information contained in this document is provided without liability for information purposes only and is subject to change without notice. No representation or warranty is given or to be implied as to the completeness of information or fitness for any particular purpose. Reproduction, use or disclosure to third parties, without express written authority, is strictly prohibited.

Case 2: Run 2: HRSGPS-Aspen Coupling
Results - MW and Steam Flows

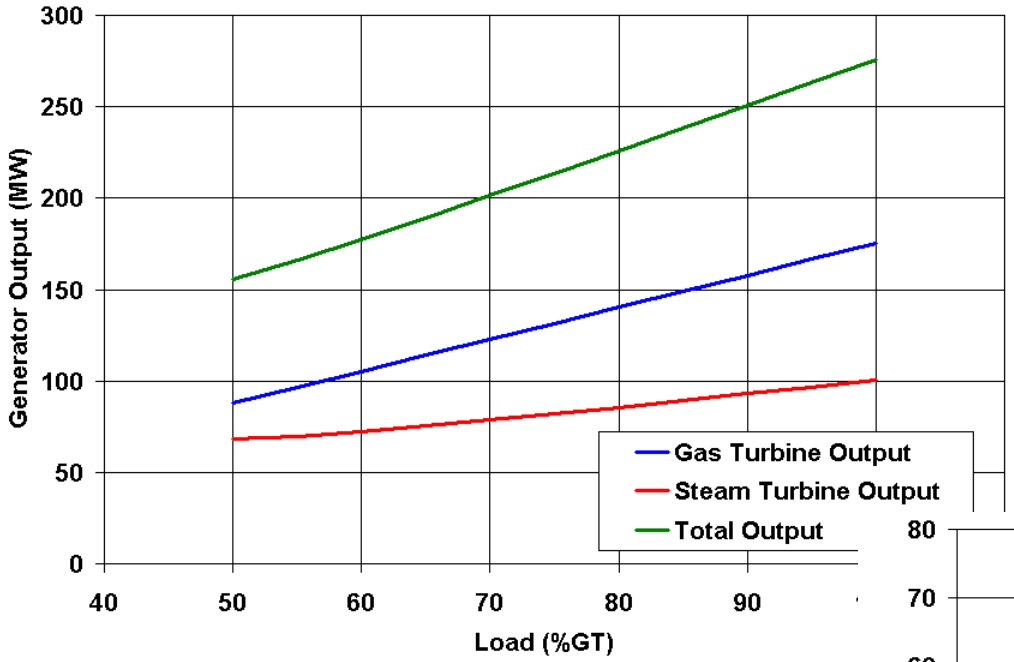

- 44 CO variables exchanged

- Run times on the order of a few “minutes”/load point

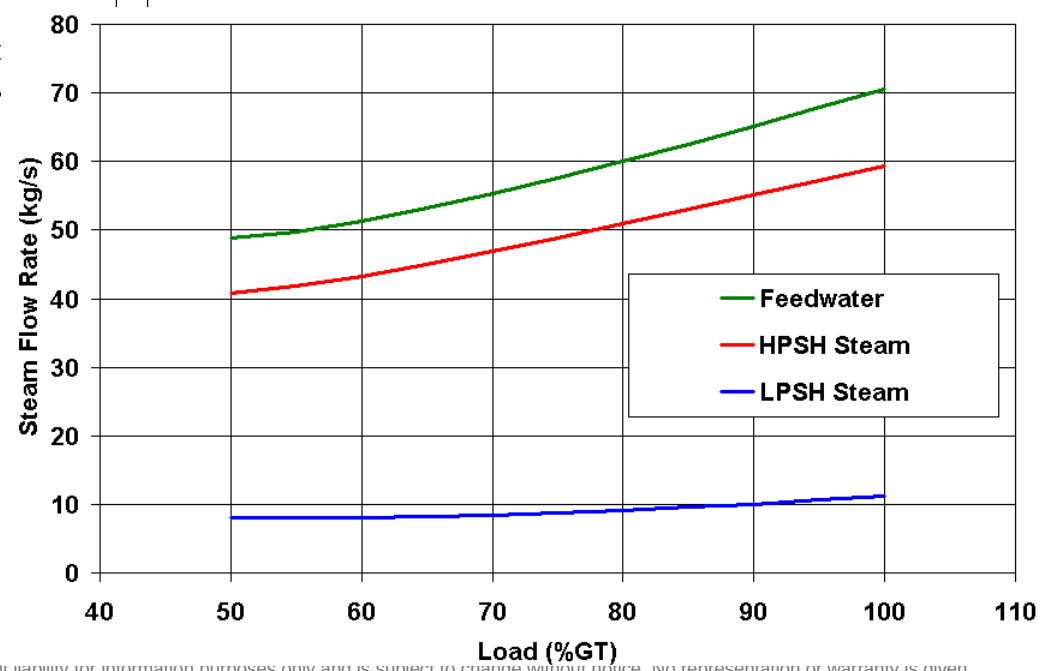

© Alstom 2009. All rights reserved. Information contained in this document is provided without liability for information purposes only and is subject to change without notice. No representation or warranty is given or to be implied as to the completeness of information or fitness for any particular purpose. Reproduction, use or disclosure to third parties, without express written authority, is strictly prohibited.

Case 2: Run 3: CFD-Aspen Coupling
Cycle Construction

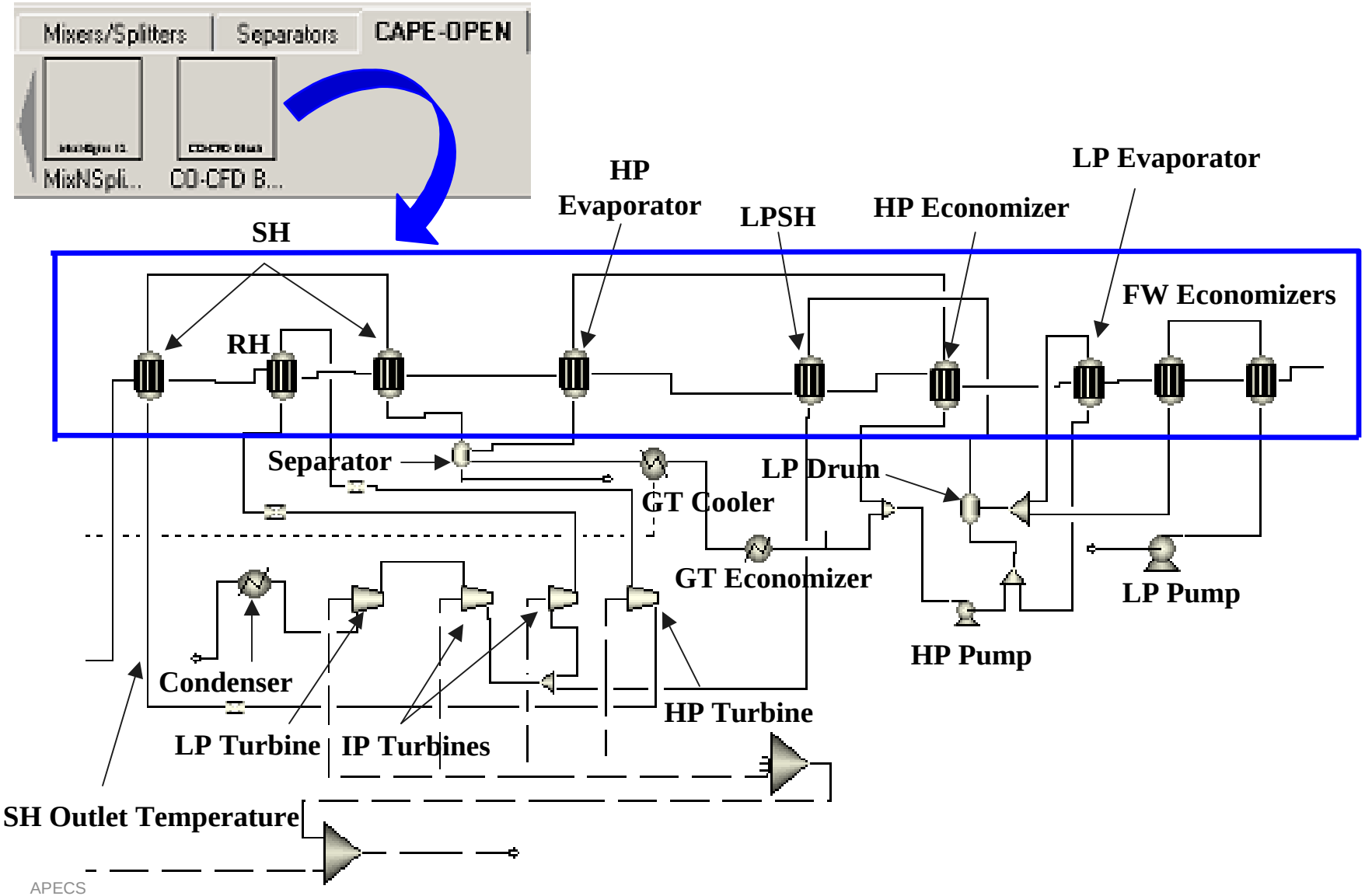

APECS

© Alstom 2009. All rights reserved. Information contained in this document is provided without liability for information purposes only and is subject to change without notice. No representation or warranty is given or to be implied as to the completeness of information or fitness for any particular purpose. Reproduction, use or disclosure to third parties, without express written authority, is strictly prohibited.

HX Solution Methodology
First Step

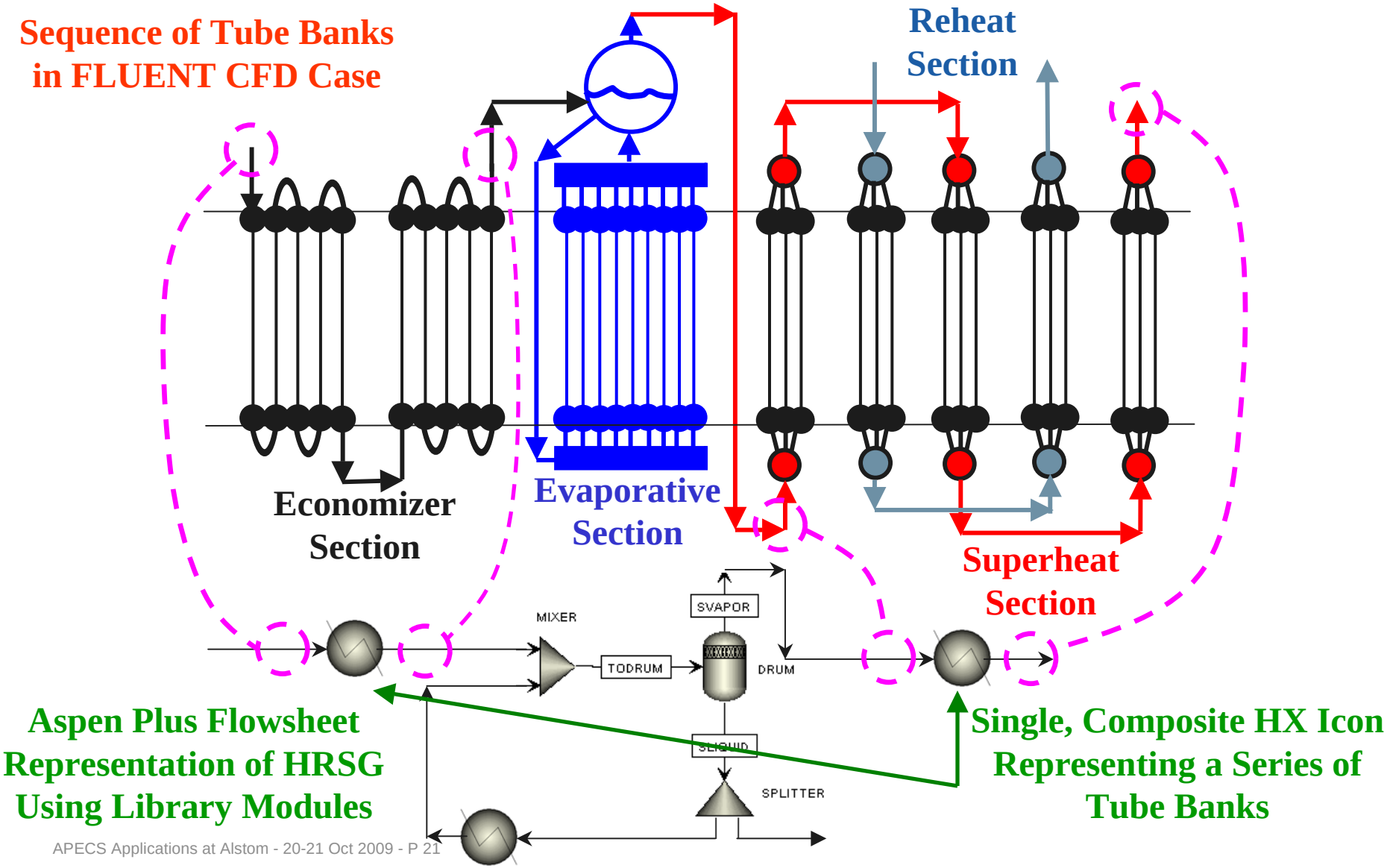

© Alstom 2009. All rights reserved. Information contained in this document is provided without liability for information purposes only and is subject to change without notice. No representation or warranty is given or to be implied as to the completeness of information or fitness for any particular purpose. Reproduction, use or disclosure to third parties, without express written authority, is strictly prohibited.

HX Solution Methodology
Second Step

- Streams duplicated and connected to physical model ports

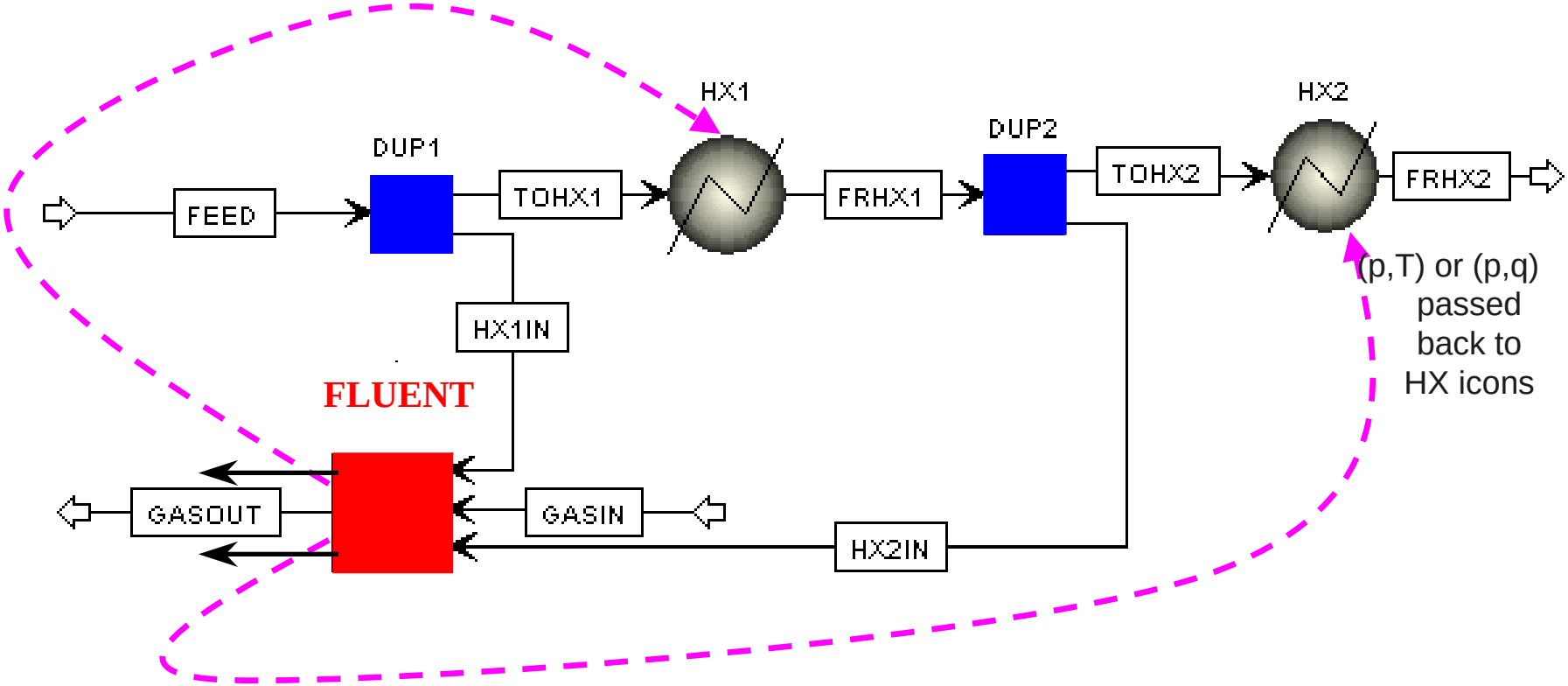

- FLUENT HX outlet values passed to Aspen as CO variables
- Outlet steam/water conditions of Aspen's HX icon overwritten with corresponding FLUENT tube bank info

© Alstom 2009. All rights reserved. Information contained in this document is provided without liability for information purposes only and is subject to change without notice. No representation or warranty is given or to be implied as to the completeness of information or fitness for any particular purpose. Reproduction, use or disclosure to third parties, without express written authority, is strictly prohibited.

HX Solution Methodology
Solution Sequence

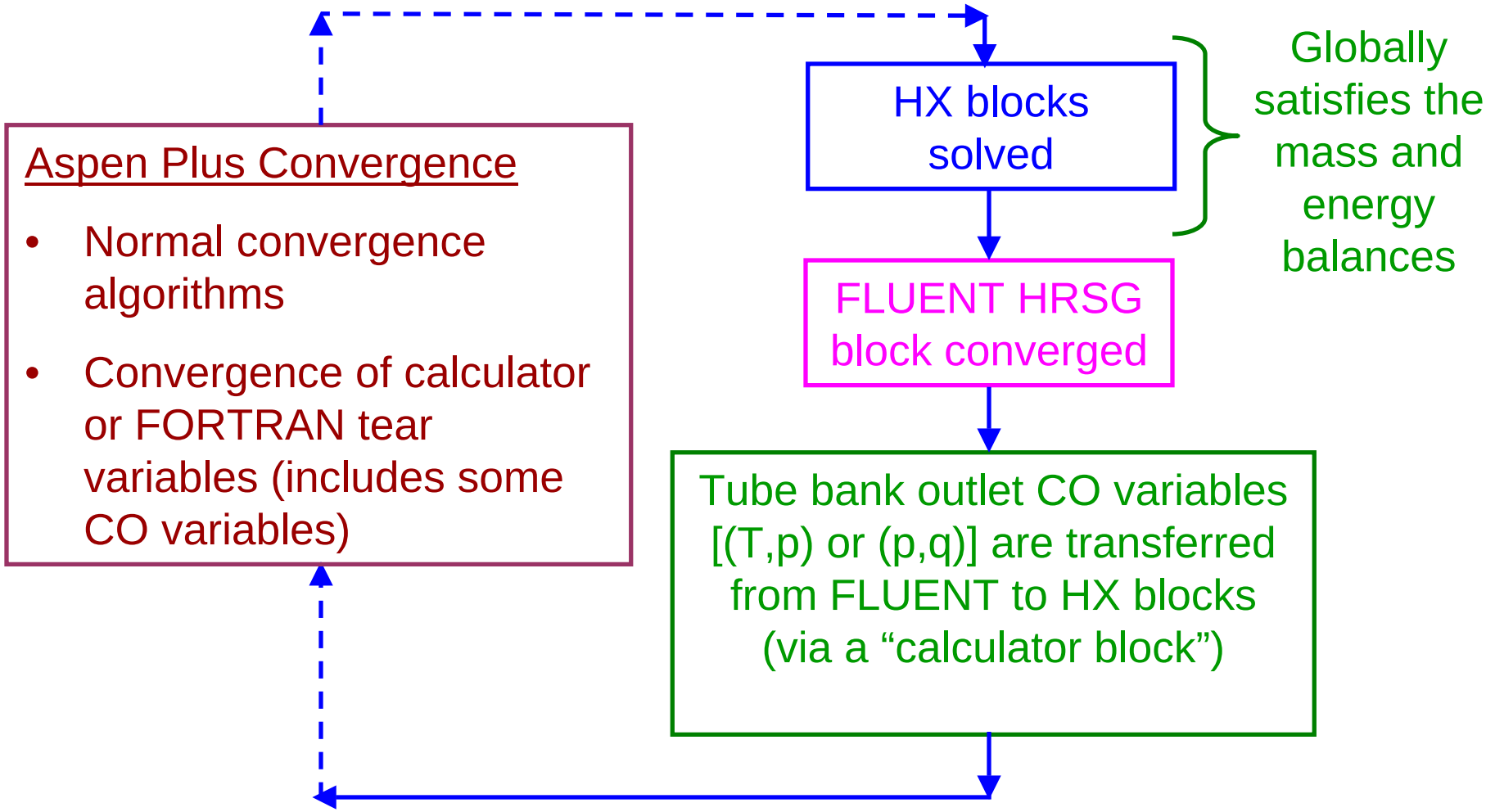

- Redundancy of FLUENT and HX blocks is advantageous for those CFD blocks that are simultaneously connected to many parts of the cycle.

© Alstom 2009. All rights reserved. Information contained in this document is provided without liability for information purposes only and is subject to change without notice. No representation or warranty is given or to be implied as to the completeness of information or fitness for any particular purpose. Reproduction, use or disclosure to third parties, without express written authority, is strictly prohibited.

Case 2: Run 3: CFD-Aspen Coupling
Instantiation and Block Arrangement

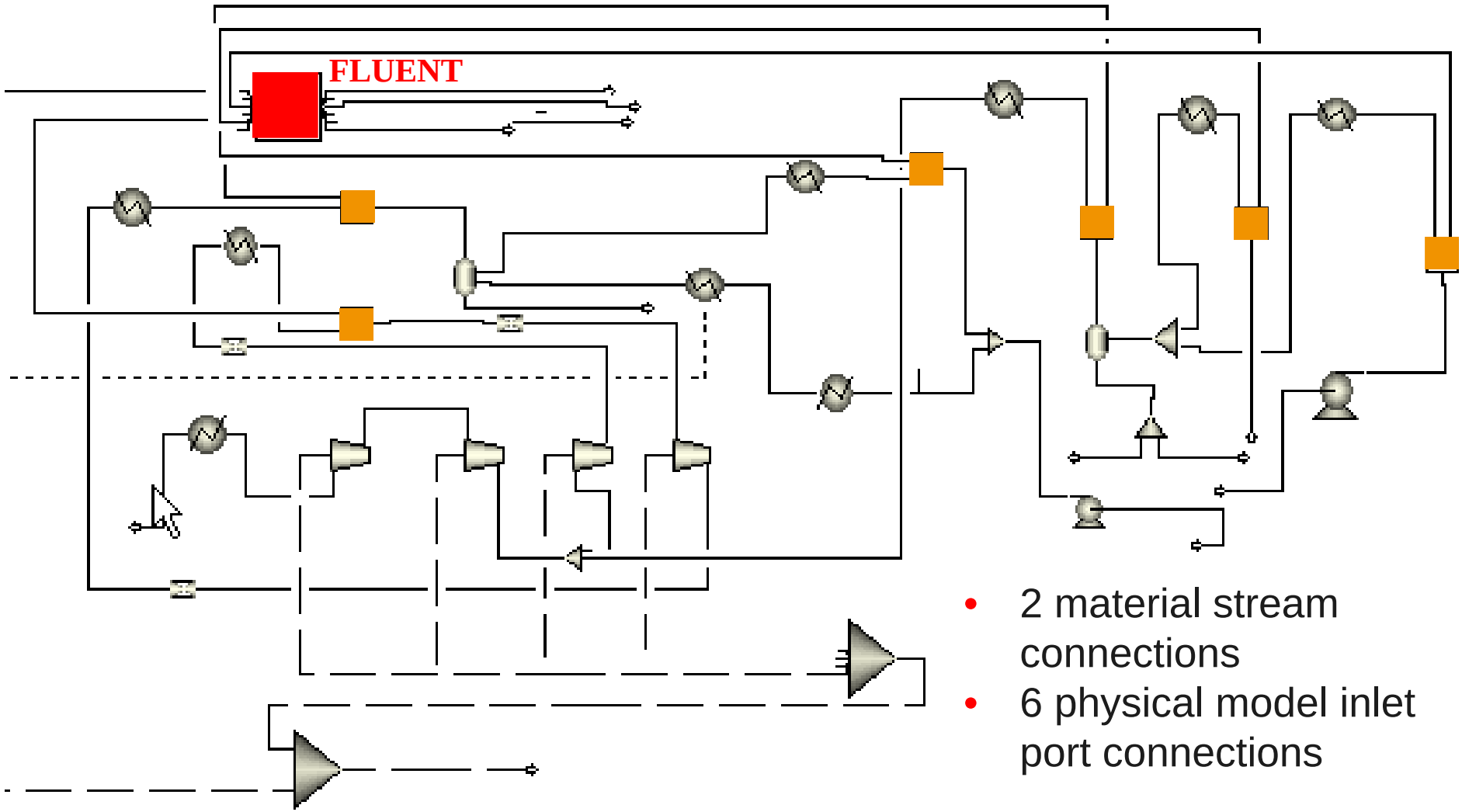

- 2 material stream connections
- 6 physical model inlet port connections

© Alstom 2009. All rights reserved. Information contained in this document is provided without liability for information purposes only and is subject to change without notice. No representation or warranty is given or to be implied as to the completeness of information or fitness for any particular purpose. Reproduction, use or disclosure to third parties, without express written authority, is strictly prohibited.

Case 2: Run 3: CFD-Aspen Coupling
Solution Approach

- 9 tube banks in HRSG collapsed to a simpler representation of 6 HX blocks on flowsheet

- Based on control strategy for “once-through” HRSGs:
  - Design spec (Broyden method)
  - Feedwater flow rate manipulated to achieve desired SH outlet temperature

- Tube bank outlet CO variables
  - 6 x 4 = 24 variables (T, p, mass flow rate, q)
  - 12 calculator tear variables [2 per HX block in form of (T,p) or (p,q)]

© Alstom 2009. All rights reserved. Information contained in this document is provided without liability for information purposes only and is subject to change without notice. No representation or warranty is given or to be implied as to the completeness of information or fitness for any particular purpose. Reproduction, use or disclosure to third parties, without express written authority, is strictly prohibited.

Case 2: Run 3: CFD-Aspen Coupling
Convergence History

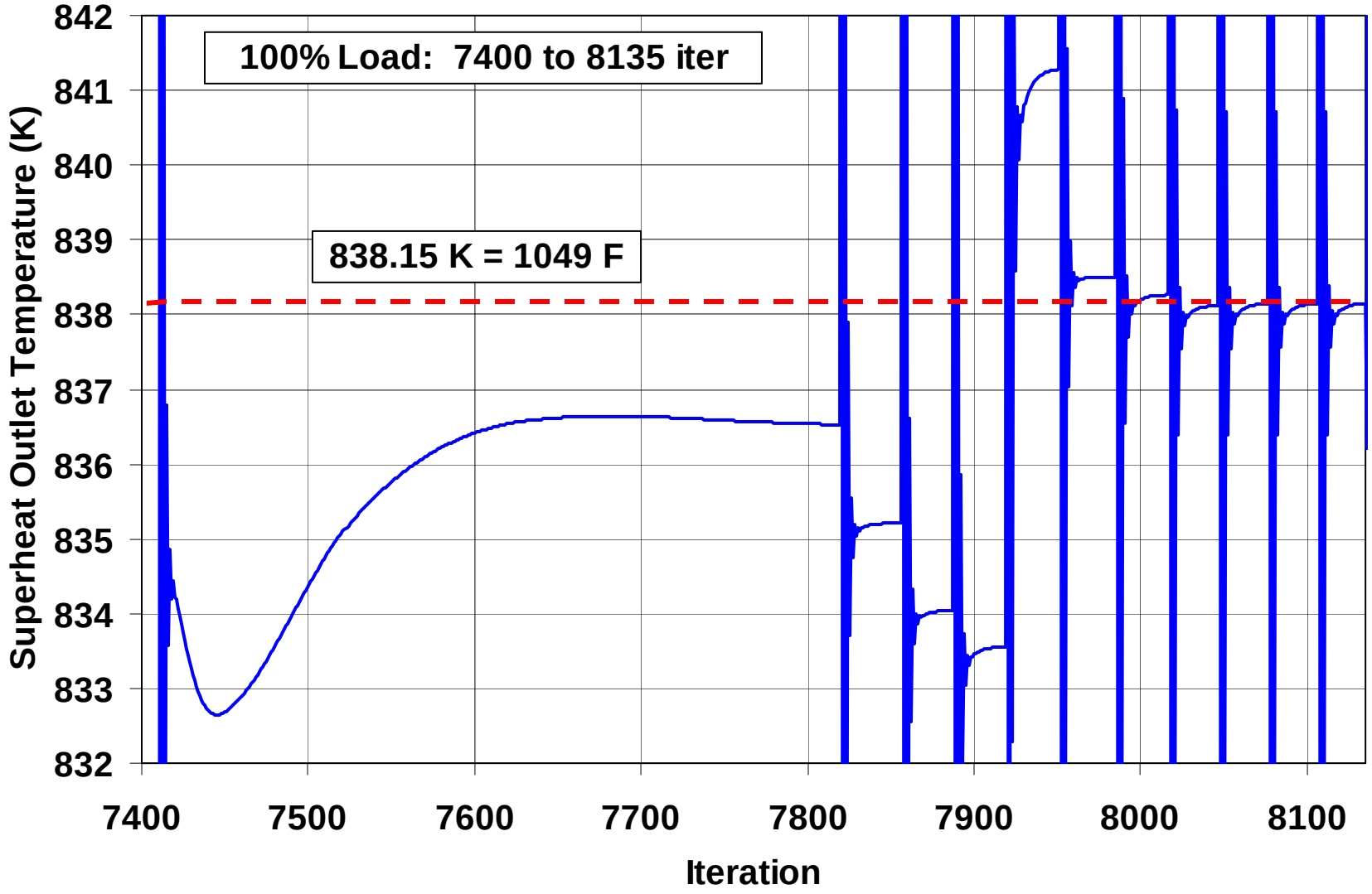

© Alstom 2009. All rights reserved. Information contained in this document is provided without liability for information purposes only and is subject to change without notice. No representation or warranty is given or to be implied as to the completeness of information or fitness for any particular purpose. Reproduction, use or disclosure to third parties, without express written authority, is strictly prohibited.

Case 2: Run 3: CFD-Aspen Coupling
Residual Traces

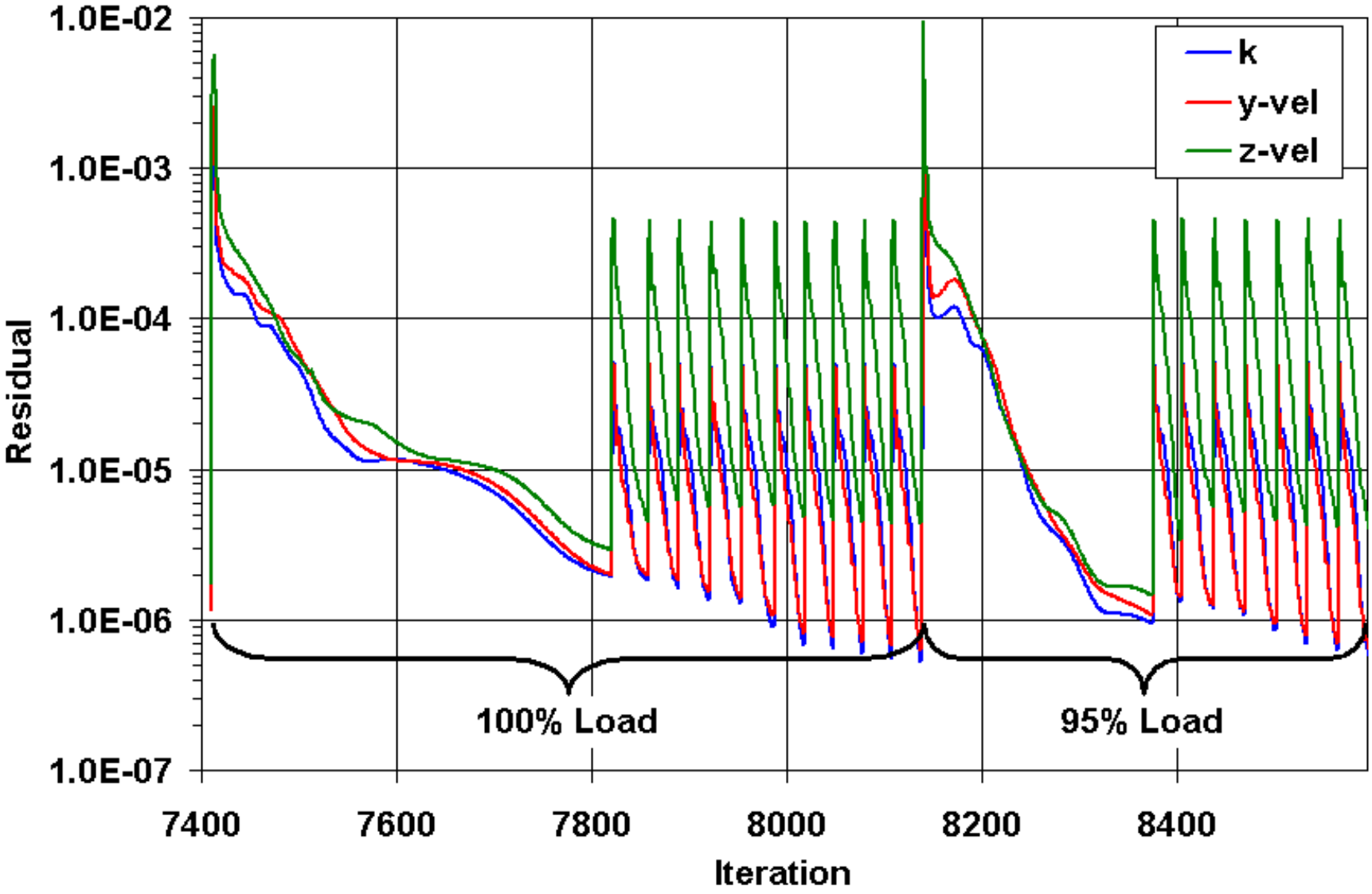

© Alstom 2009. All rights reserved. Information contained in this document is provided without liability for information purposes only and is subject to change without notice. No representation or warranty is given or to be implied as to the completeness of information or fitness for any particular purpose. Reproduction, use or disclosure to third parties, without express written authority, is strictly prohibited.

Case 2: Run 3: CFD-Aspen Coupling
Final Results - MW and Flow Rates

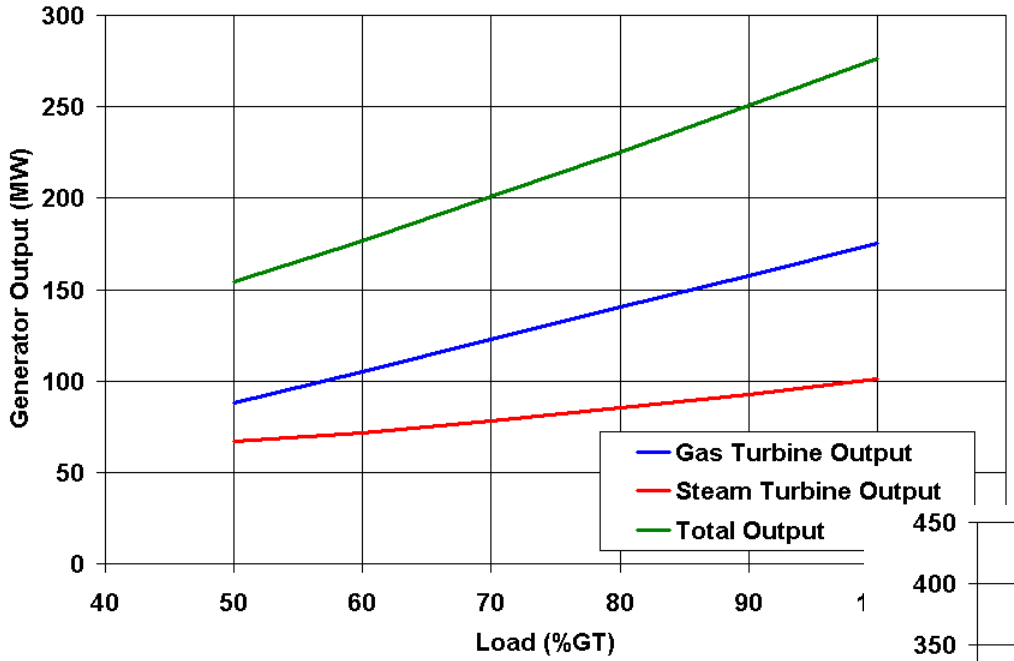

- Aspen Plus on PC
- FLUENT running on LINUX over Alstom local area network (LAN)

- 11 load points over range from 100% to 50% load (%GT)

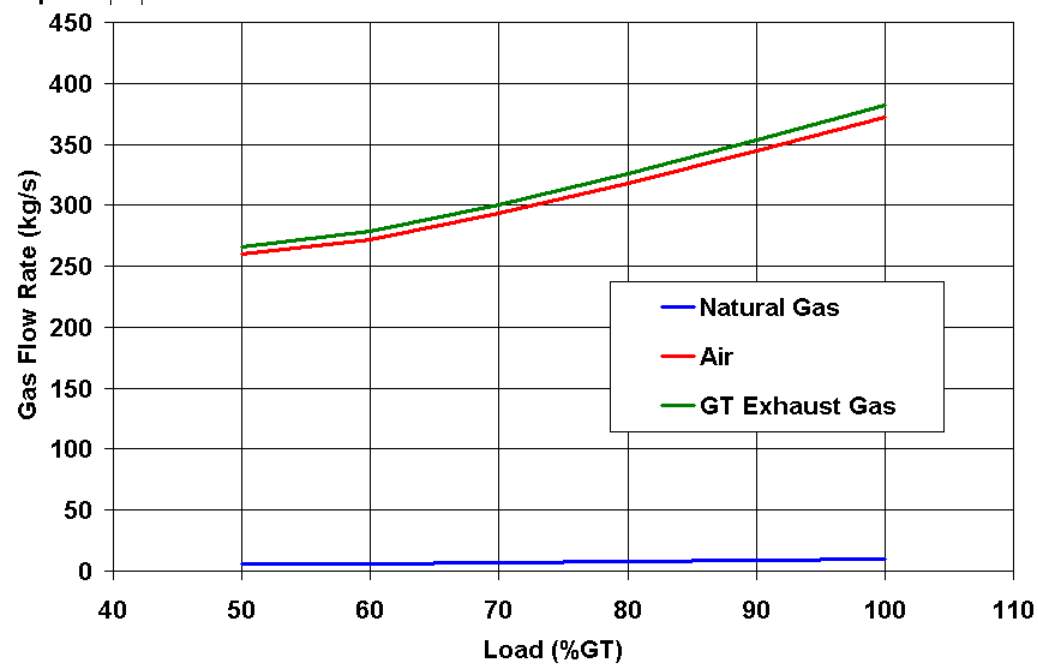

© Alstom 2009. All rights reserved. Information contained in this document is provided without liability for information purposes only and is subject to change without notice. No representation or warranty is given or to be implied as to the completeness of information or fitness for any particular purpose. Reproduction, use or disclosure to third parties, without express written authority, is strictly prohibited.

Demonstration Case 3
FutureGen Cycle

- FutureGen Cycle
  - 250 MWe IGCC
  - gasifier
  - CO_2 capture
  - gas turbine burning H_2-enriched syngas
  - pressure-swing absorption (PSA)
  - air separation unit (ASU)
  - 3-pressure heat recovery steam generator (HRSG)
  - acid-gas cleanup

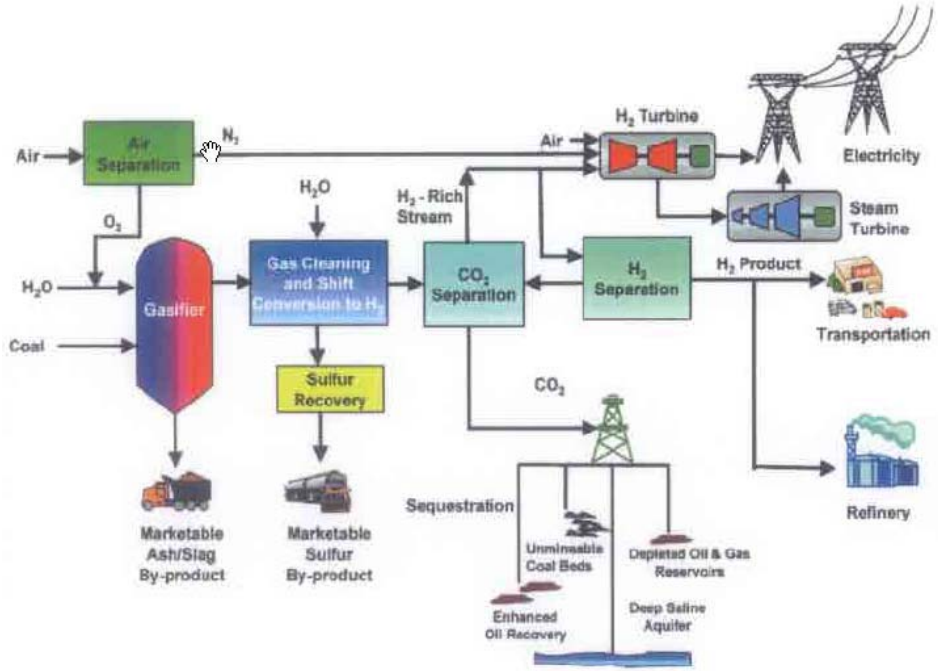

© Alstom 2009. All rights reserved. Information contained in this document is provided without liability for information purposes only and is subject to change without notice. No representation or warranty is given or to be implied as to the completeness of information or fitness for any particular purpose. Reproduction, use or disclosure to third parties, without express written authority, is strictly prohibited.

Case 3: CFD-Aspen Coupling
HRSG Geometry (Elongated View)

- 18 tube banks

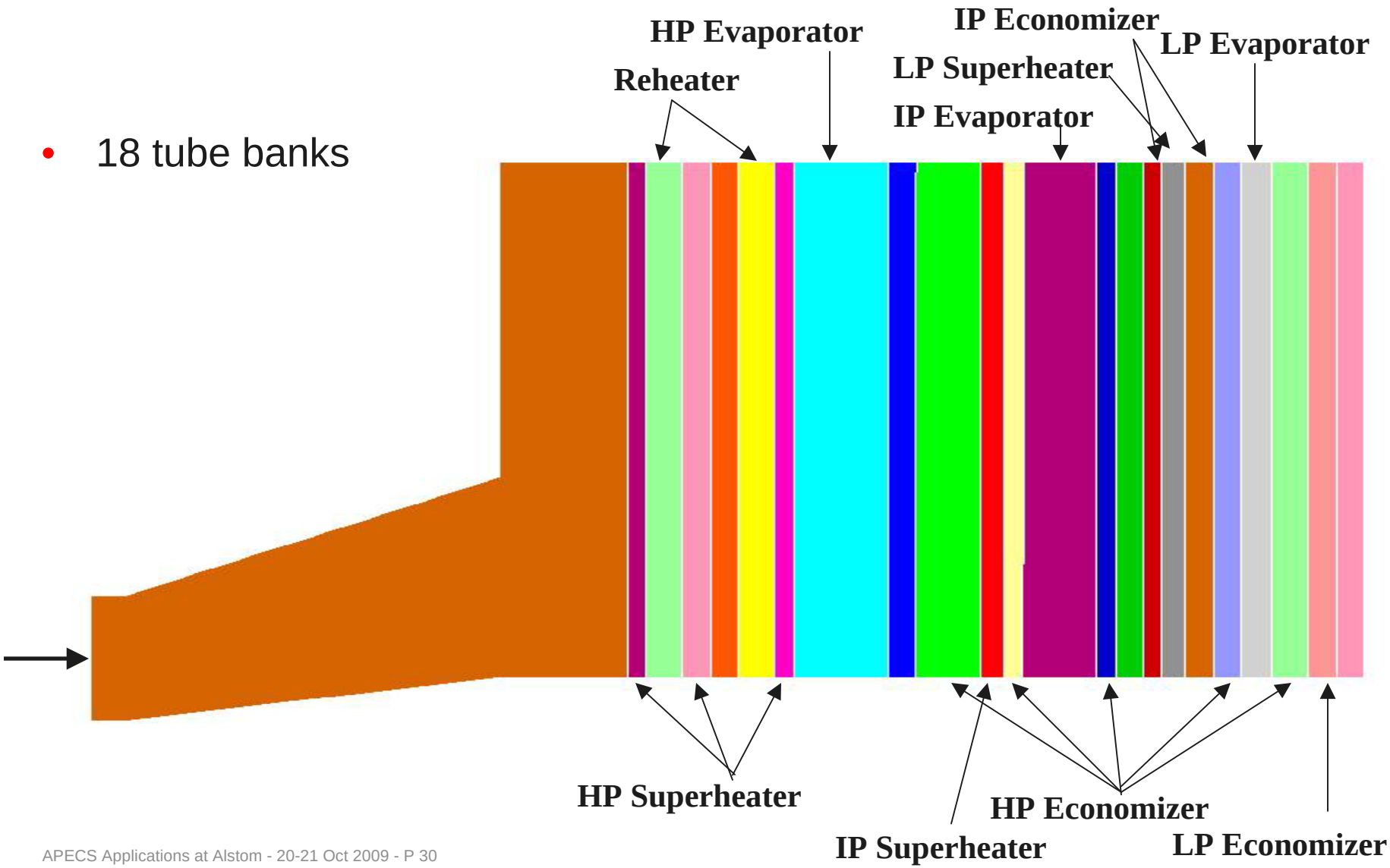

© Alstom 2009. All rights reserved. Information contained in this document is provided without liability for information purposes only and is subject to change without notice. No representation or warranty is given or to be implied as to the completeness of information or fitness for any particular purpose. Reproduction, use or disclosure to third parties, without express written authority, is strictly prohibited.

Case 3: CFD-Aspen Coupling
HRSG Geometry and Grid

- ~40,000 cells

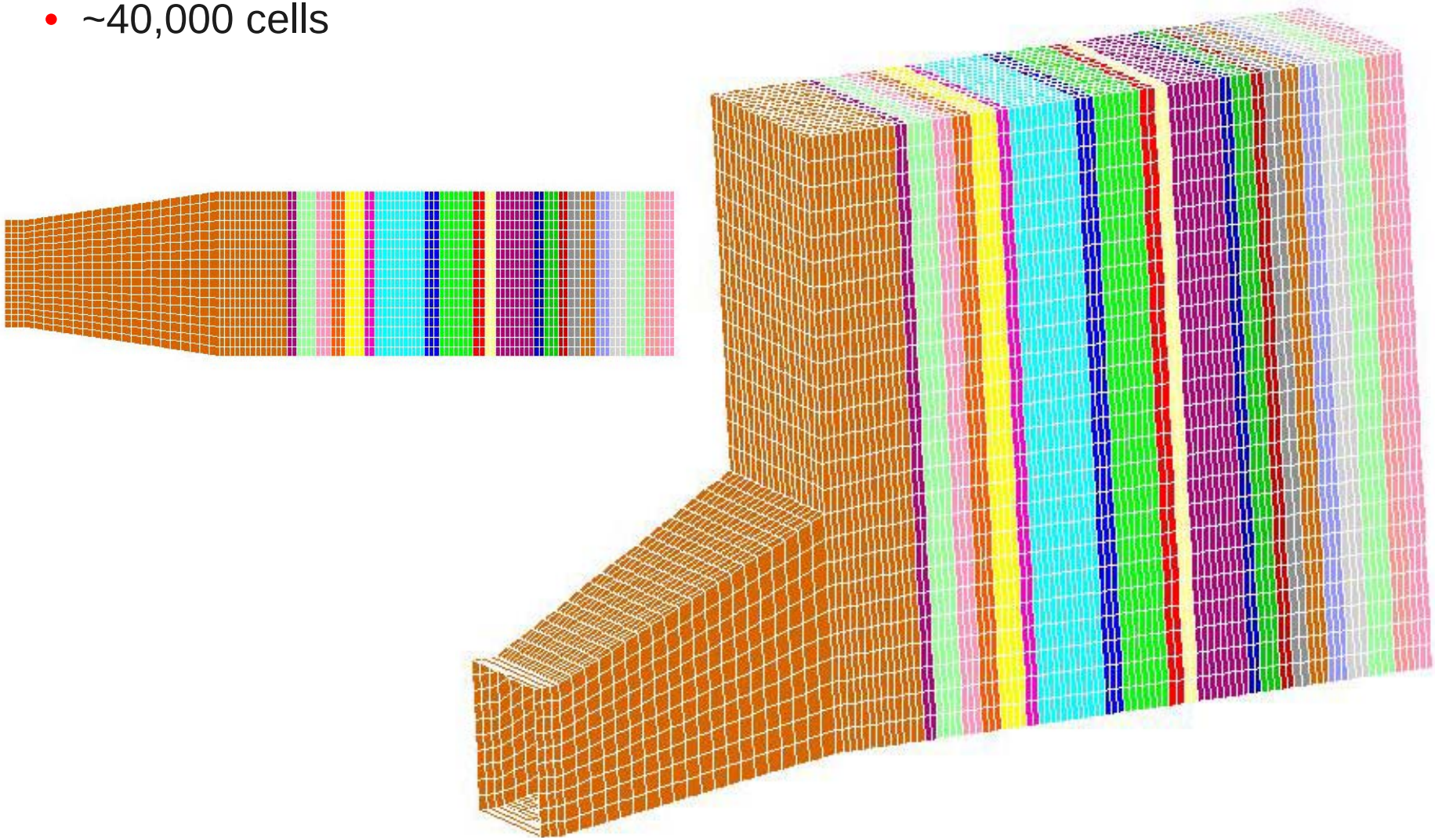

© Alstom 2009. All rights reserved. Information contained in this document is provided without liability for information purposes only and is subject to change without notice. No representation or warranty is given or to be implied as to the completeness of information or fitness for any particular purpose. Reproduction, use or disclosure to third parties, without express written authority, is strictly prohibited.

Case 3: CFD-Aspen Coupling
Temperature Contours (Midplane)

Temperature (K)

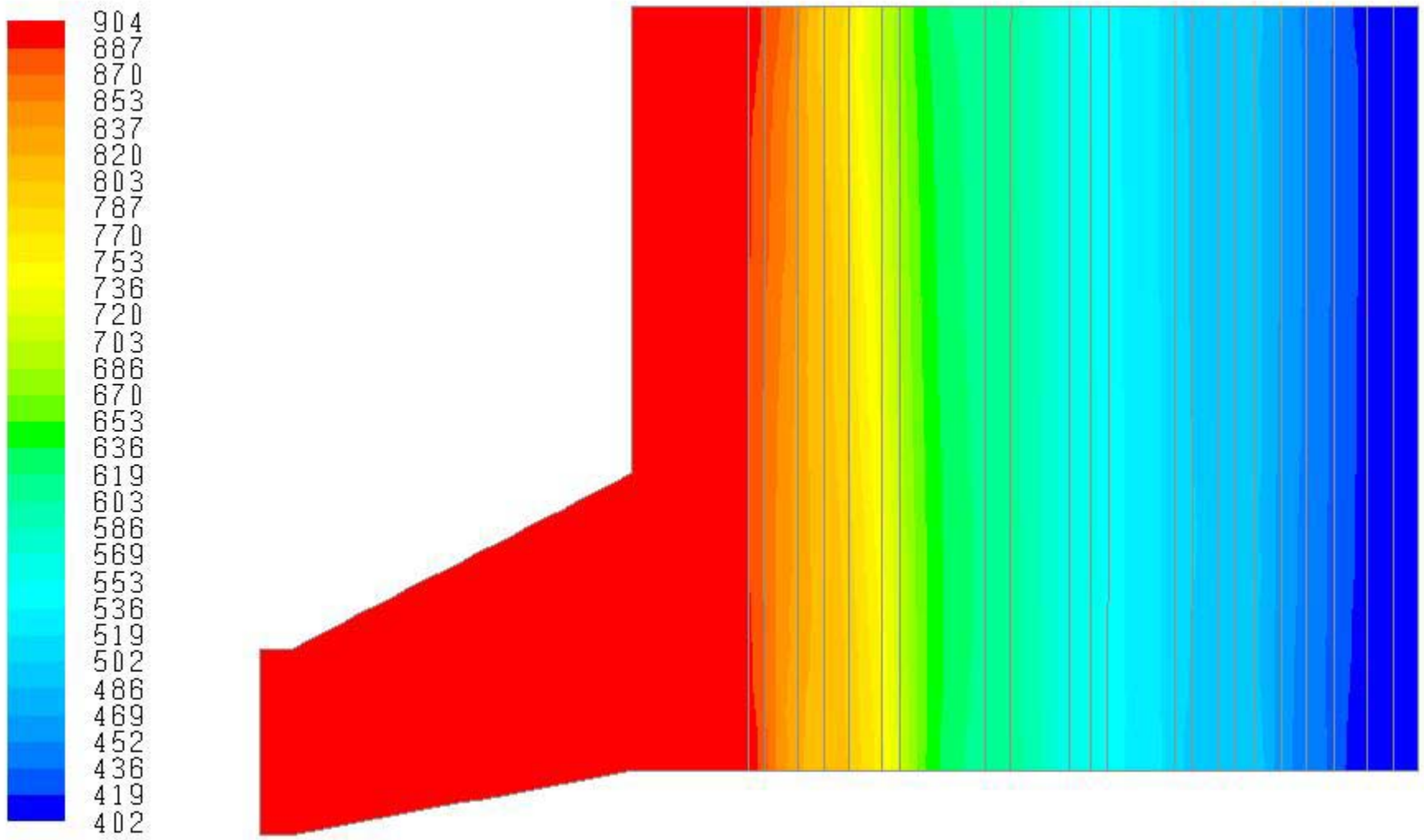

© Alstom 2009. All rights reserved. Information contained in this document is provided without liability for information purposes only and is subject to change without notice. No representation or warranty is given or to be implied as to the completeness of information or fitness for any particular purpose. Reproduction, use or disclosure to third parties, without express written authority, is strictly prohibited.

Case 3: Tube Bank Calibration
Gas Side

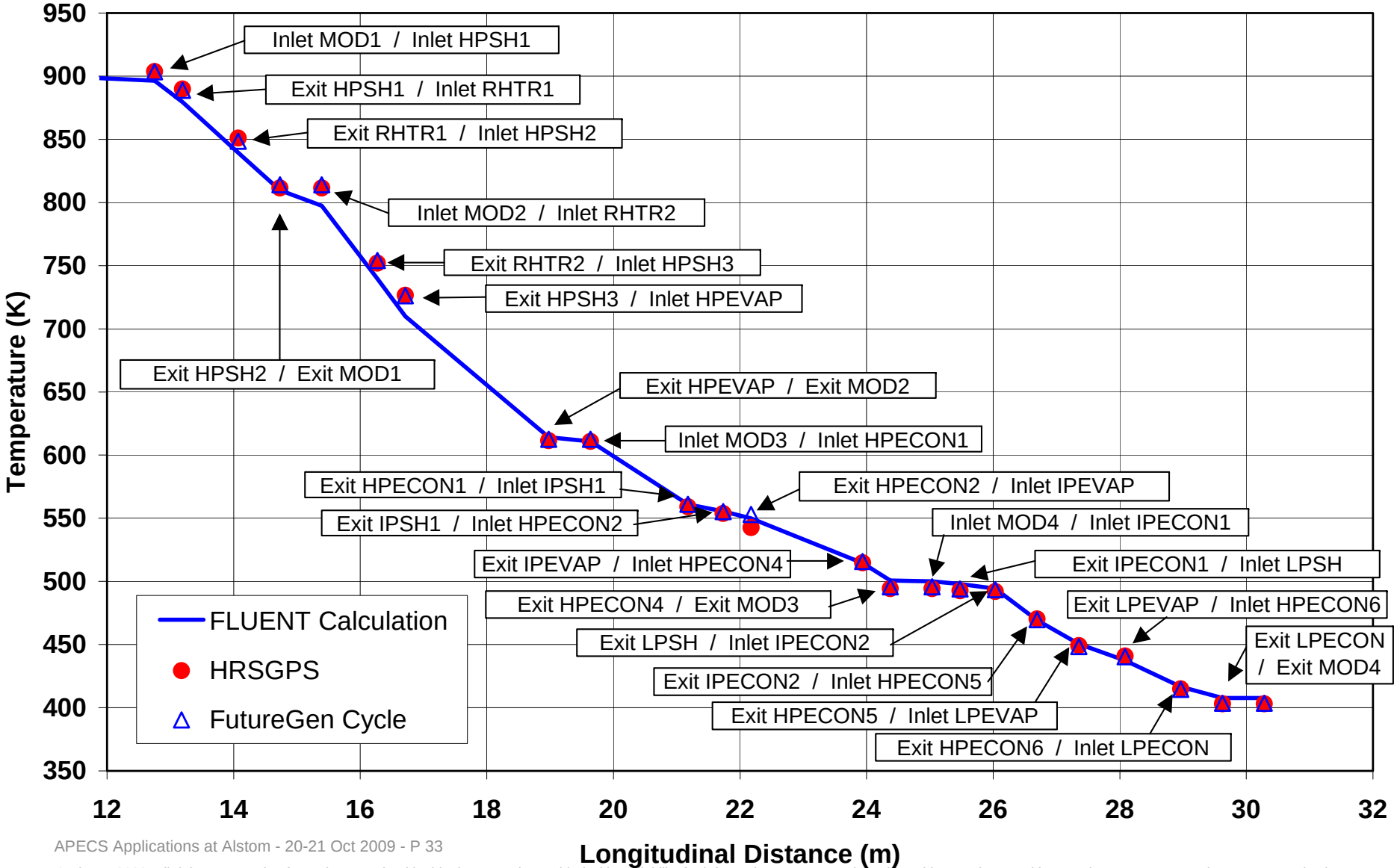

© Alstom 2009. All rights reserved. Information contained in this document is provided without liability for information purposes only and is subject to change without notice. No representation or warranty is given or to be implied as to the completeness of information or fitness for any particular purpose. Reproduction, use or disclosure to third parties, without express written authority, is strictly prohibited.

Case 3: Tube Bank Calibration
Coolant Side

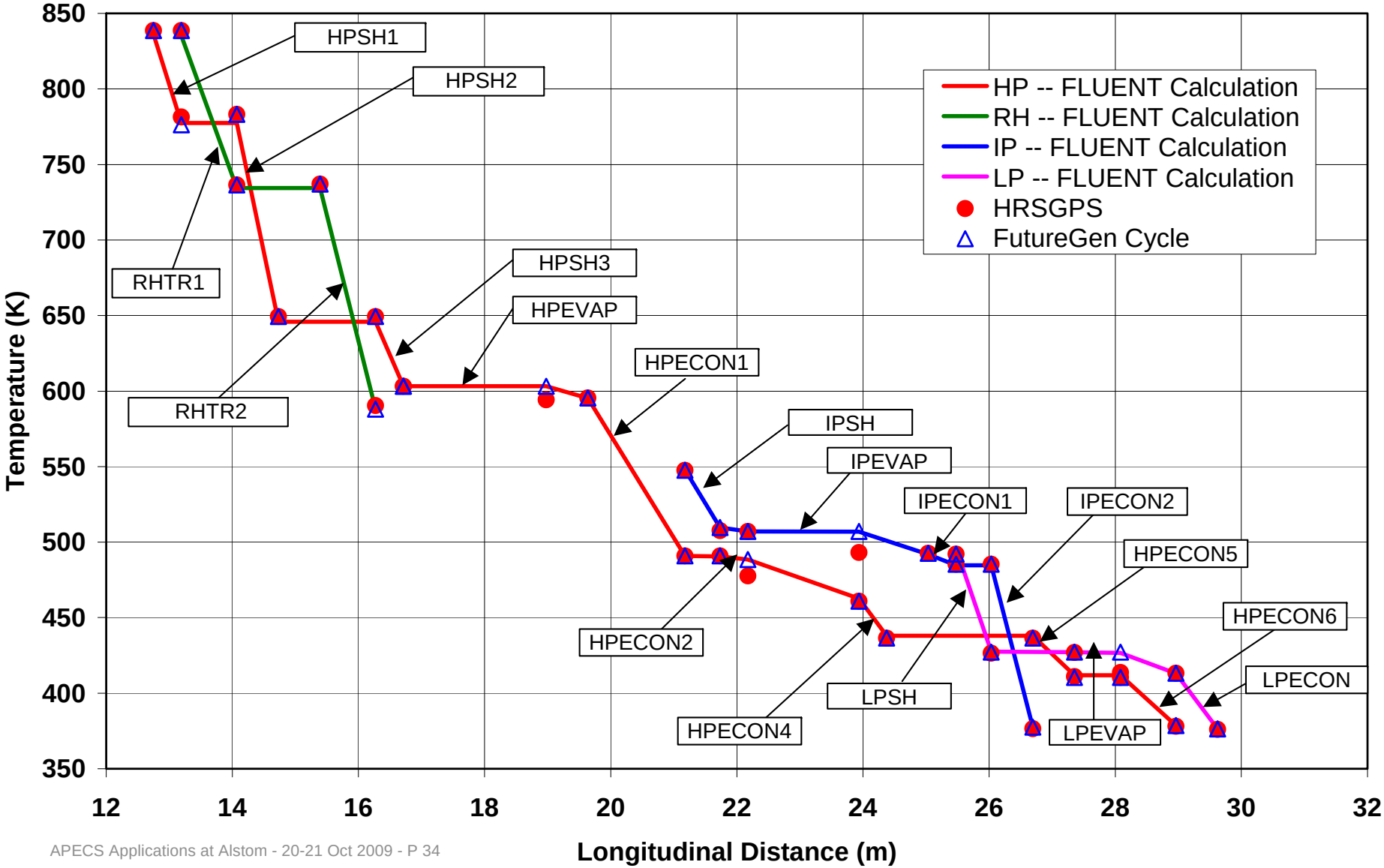

© Alstom 2009. All rights reserved. Information contained in this document is provided without liability for information purposes only and is subject to change without notice. No representation or warranty is given or to be implied as to the completeness of information or fitness for any particular purpose. Reproduction, use or disclosure to third parties, without express written authority, is strictly prohibited.

Case 3: CFD-Aspen Coupling
Solution Concept

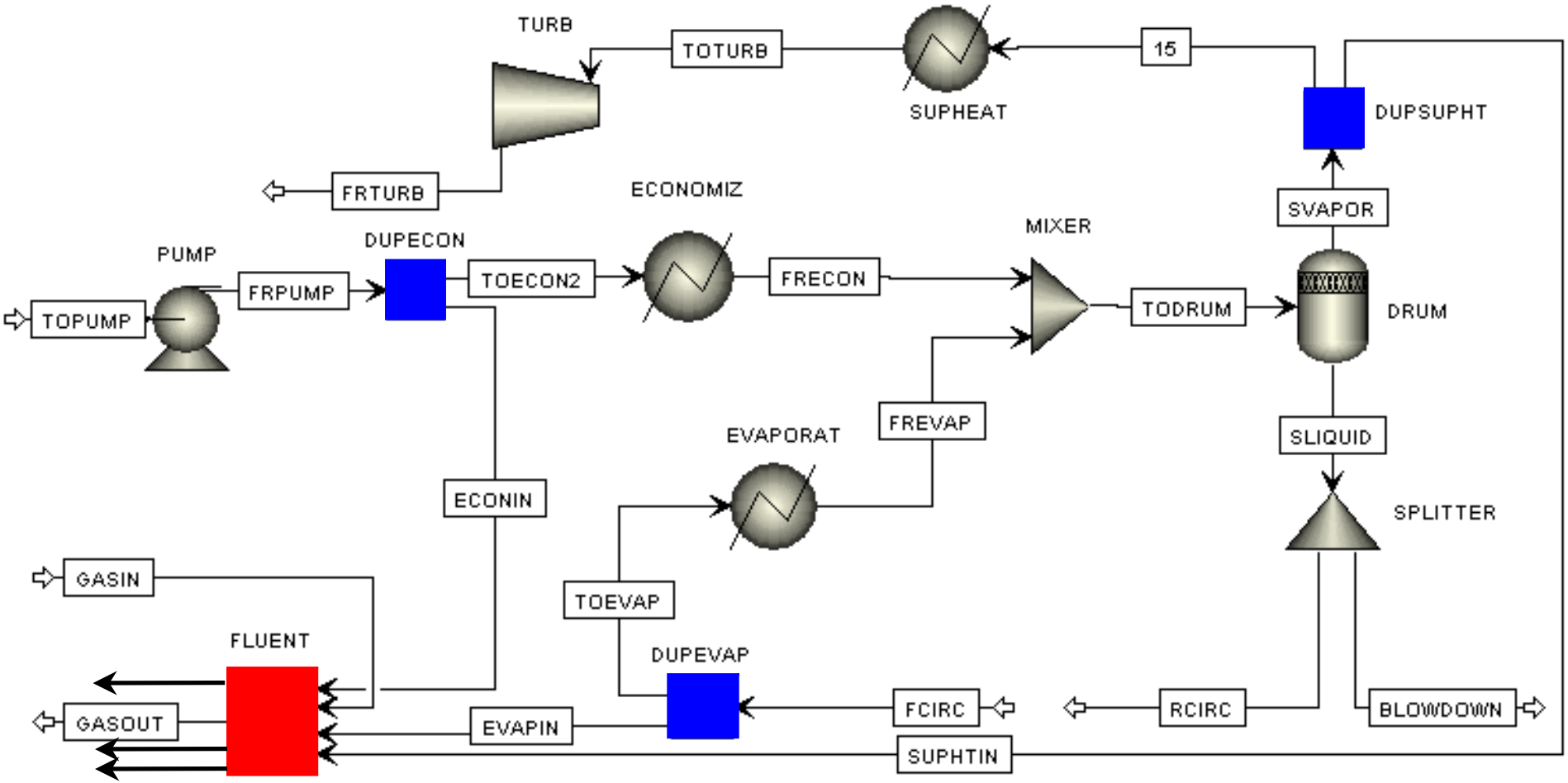

- Design spec: manipulate the economizer flow rate until the circulation flow rate through the evaporator is balanced

© Alstom 2009. All rights reserved. Information contained in this document is provided without liability for information purposes only and is subject to change without notice. No representation or warranty is given or to be implied as to the completeness of information or fitness for any particular purpose. Reproduction, use or disclosure to third parties, without express written authority, is strictly prohibited.

Case 3: CFD-Aspen Coupling
Instantiation and Block Arrangement

- 2 material stream connections
- 12 physical model inlet port connections

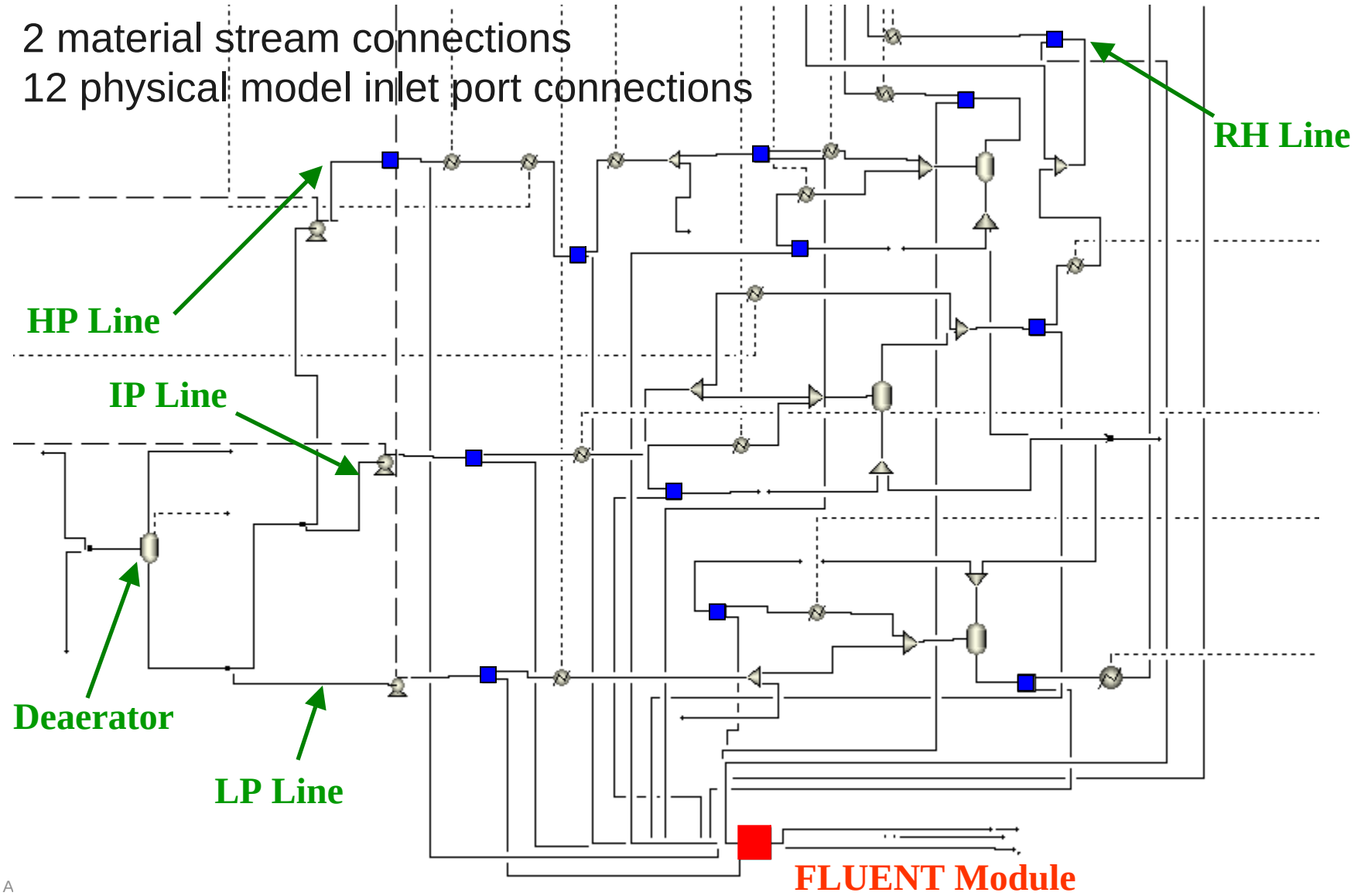

A

© Alstom 2009. All rights reserved. Information contained in this document is provided without liability for information purposes only and is subject to change without notice. No representation or warranty is given or to be implied as to the completeness of information or fitness for any particular purpose. Reproduction, use or disclosure to third parties, without express written authority, is strictly prohibited.

Case 3: CFD-Aspen Coupling
Solution Approach

ALSTOM

- 18 tube banks in HRSG collapsed to simpler representation of 12 HX blocks on flowsheet

- Based on control strategy for HRSGs with drums:
  - recycle stream from drum to evaporator is torn
  - economizer flow rate manipulated until circulation rate through evaporator is balanced
  - design specs based on secant method

- Tube bank outlet CO variables
  - 12 x 4 = 48 variables (T, p, mass flow rate, q)
  - 24 calculator tear variables [2 per HX block in form of (T,p) or (p,q)]
  - FLUENT executed typically between 3 and 8 times to converge calculator tear variables in innermost loop

© Alstom 2009. All rights reserved. Information contained in this document is provided without liability for information purposes only and is subject to change without notice. No representation or warranty is given or to be implied as to the completeness of information or fitness for any particular purpose. Reproduction, use or disclosure to third parties, without express written authority, is strictly prohibited.

Case 3: CFD-Aspen Coupling
Sample Convergence History

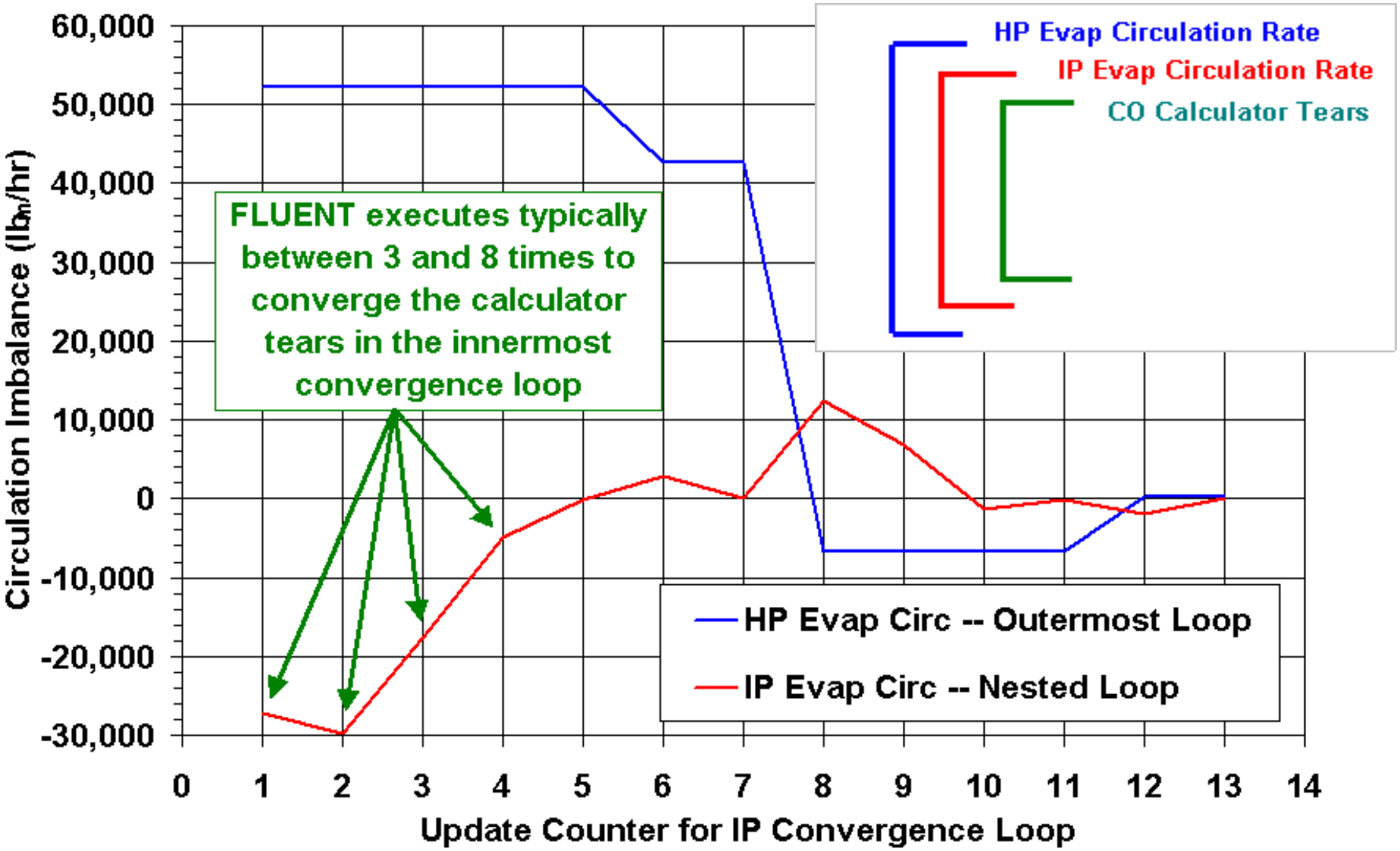

© Alstom 2009. All rights reserved. Information contained in this document is provided without liability for information purposes only and is subject to change without notice. No representation or warranty is given or to be implied as to the completeness of information or fitness for any particular purpose. Reproduction, use or disclosure to third parties, without express written authority, is strictly prohibited.

Agenda

Topic 1 Vision-21 Program (Phase I)

Topic 2 APECS Program (Phase II)

Topic 3 APECS Oxy-Firing/Chemical Looping Combustion

© Alstom 2009. All rights reserved. Information contained in this document is provided without liability for information purposes only and is subject to change without notice. No representation or warranty is given or to be implied as to the completeness of information or fitness for any particular purpose. Reproduction, use or disclosure to third parties, without express written authority, is strictly prohibited.

APECS Development Background
Phase II

- Phase II: APECS:
  - Time Period: Aug 2, 2005 to Sep 12, 2009 ← recently finished
  - Cooperative Agreement DE-FC26-05NT42443
  - "Software Framework for Advanced Power Plant Simulation"
  - Team: Fluent (now ANSYS) Inc, Aspen Technology Inc., Alstom Power, Carnegie Mellon University (CMU), NETL, (Iowa State)
  - Desired Program Achievements:
    - Advanced model database management system (EKM)
    - Improved reduced-order models and solution strategies
    - Enhanced physical model support
    - Virtual Plant Walkthrough (VE-Suite)
    - Demonstrate use of CO-compliant models in an existing commercial dynamic simulator (Aspen Dynamics)

© Alstom 2009. All rights reserved. Information contained in this document is provided without liability for information purposes only and is subject to change without notice. No representation or warranty is given or to be implied as to the completeness of information or fitness for any particular purpose. Reproduction, use or disclosure to third parties, without express written authority, is strictly prohibited.

APECS Development Background
Phase II: Alstom Contribution

ALSTOM

- Advisory board meetings
- Debug and showcase the technology through demonstration cases

Aspen Plus Process Model	Higher Fidelity Equipment Item	Third-Party Software Used for Equipment Item
[Demo 3:] A 250 MWe FutureGen integrated gasification, combined cycle (IGCC) power plant	Heat recovery steam generator (HRSG)	• Regression ROM
A 556 MWe FutureGen integrated gasification, combined cycle (IGCC) power plant	Radiant syngas cooler (RSC)	• Regression ROM with Principal Component Analysis (PCA) for plots
A 250 MWe FutureGen integrated gasification, combined cycle (IGCC) power plant	Two-stage entrained-flow gasifier	• CFD (FLUENT) [geometric scaling capability]
[Addendum:] ALSTOM 18 MWt Boiler Simulation Facility (BSF)	Oxy-fired PC boiler	• CFD (FLUENT) [NOx and SOx emissions capability]

© Alstom 2009. All rights reserved. Information contained in this document is provided without liability for information purposes only and is subject to change without notice. No representation or warranty is given or to be implied as to the completeness of information or fitness for any particular purpose. Reproduction, use or disclosure to third parties, without express written authority, is strictly prohibited.

Phase II: Demonstration Cases

- 250 MWe FutureGen IGCC

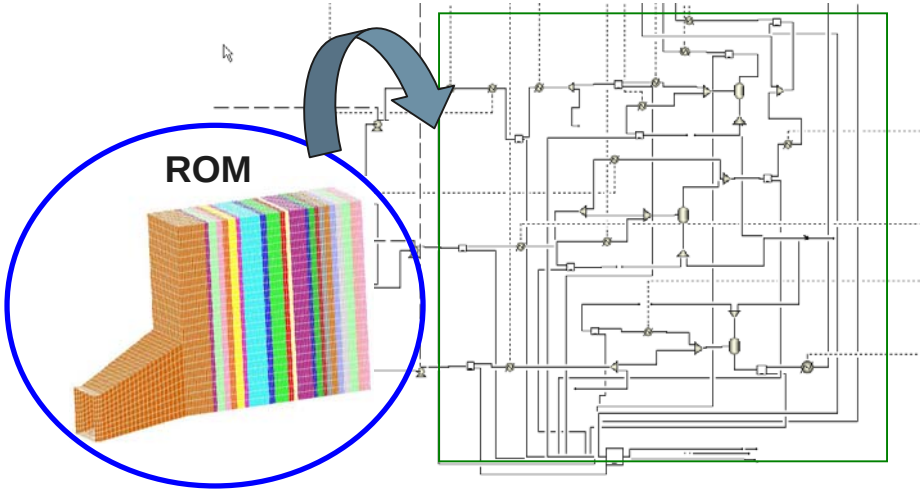

- 556 MWe IGCC

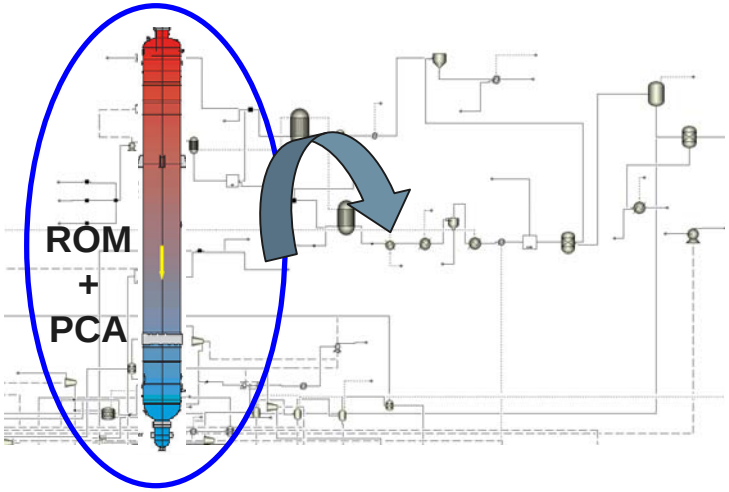

- 250 MWe FutureGen IGCC

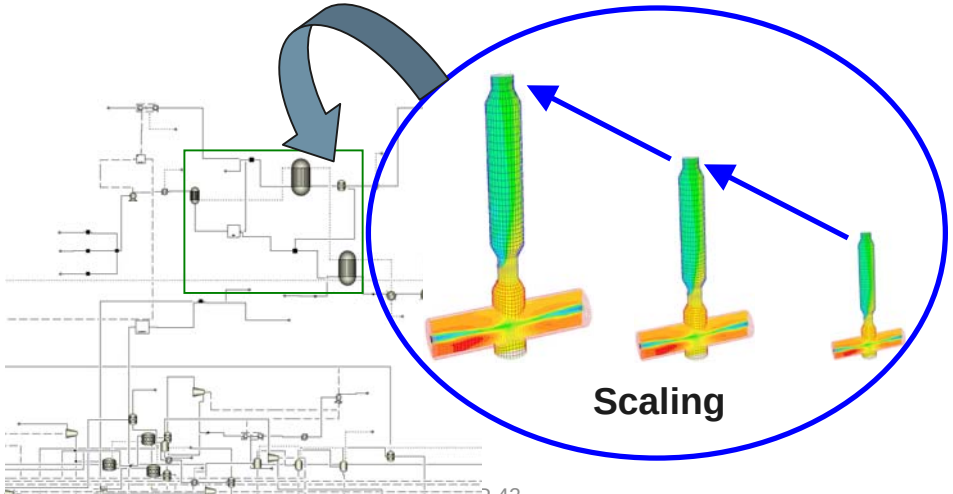

- 18 MWth Alstom BSF Facility

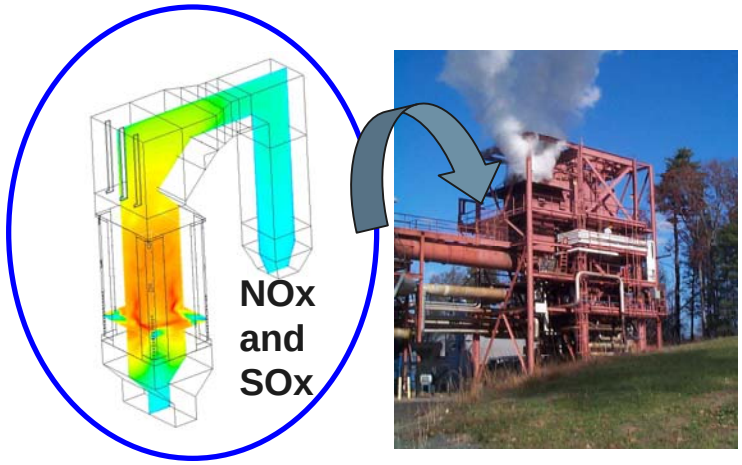

© Alstom 2009. All rights reserved. Information contained in this document is provided without liability for information purposes only and is subject to change without notice. No representation or warranty is given or to be implied as to the completeness of information or fitness for any particular purpose. Reproduction, use or disclosure to third parties, without express written authority, is strictly prohibited.

APECS Phase II
Results

- Results will be discussed in subsequent presentations.

© Alstom 2009. All rights reserved. Information contained in this document is provided without liability for information purposes only and is subject to change without notice. No representation or warranty is given or to be implied as to the completeness of information or fitness for any particular purpose. Reproduction, use or disclosure to third parties, without express written authority, is strictly prohibited.

Agenda

Topic 1 Vision-21 Program (Phase I)

Topic 2 APECS Program (Phase II)

Topic 3 APECS Oxy-Firing/Chemical Looping Combustion

© Alstom 2009. All rights reserved. Information contained in this document is provided without liability for information purposes only and is subject to change without notice. No representation or warranty is given or to be implied as to the completeness of information or fitness for any particular purpose. Reproduction, use or disclosure to third parties, without express written authority, is strictly prohibited.

APECS OF/CLC
General Description

- APECS Study of Oxy-Firing/Chemical Looping Combustion
  - Time Period: Oct 1, 2008 to Dec 30, 2011
  - Cooperative Agreement DE-NT0005395
  - "Process/Equipment Co-Simulation of Oxy-Combustion and Chemical Looping Combustion"
  - Team: Alstom Power, ANSYS Inc.
  - Desired Program Achievements:
    - Develop a surrogate riser model as a ROM
    - Demonstrate commercial-scale CFB and CL combustion co-simulations using the ROM and APECS tool kit.

© Alstom 2009. All rights reserved. Information contained in this document is provided without liability for information purposes only and is subject to change without notice. No representation or warranty is given or to be implied as to the completeness of information or fitness for any particular purpose. Reproduction, use or disclosure to third parties, without express written authority, is strictly prohibited.

Achievement of Research Objectives
Task Development

ALSTOM

No.	Sub-Topic Research Objective	Proposed Tasks and Scope of Work
1	**Chemical looping (CL) Technologies** • …[develop] detailed CFD models of chemical looping combustion and gasification systems for … coal. • These models should be used in generating a process model/CFD model co-simulation.	**Task 4: Chemical Looping** • Development of CL sub-models for use in FLUENT. • Calibration of ROM using 3-D (dense-phase) CFD models of reducer or oxidizer risers • Co-simulation of commercial-scale facility with ROM.
2	**Advanced Carbon-Capture Technologies** • … create process and component co-simulations of advanced carbon capture technologies. • … combine detailed CFD-based simulations … with a process simulation of the overall carbon capture system.	**Task 3: Oxy-Firing CFB** • Addition of sorbent sub-model for use in CFB computations. • Calibration of ROM using 3-D CFD (dense-phase) models of CFB riser • Co-simulation of commercial-scale CFB facility with ROM.
3	… consider the use of APECS as the platform for combining FLUENT with Aspen Plus	**Tasks 3 and 4: APECS / FLUENT** • APECS/FLUENT upgrades for dense-phase and transient flows. • ANSYS as team member.

© Alstom 2009. All rights reserved. Information contained in this document is provided without liability for information purposes only and is subject to change without notice. No representation or warranty is given or to be implied as to the completeness of information or fitness for any particular purpose. Reproduction, use or disclosure to third parties, without express written authority, is strictly prohibited.

Comparison of Past Programs with Current Award
Applications Perspective

ALSTOM

Topics for Comparison	Previous Phase I and Phase II Projects	Current APECS Carbon Capture Project
Description	Highly focused on APECS software development	Focused on a particular applications area with little APECS development
Process model	Steady-state	Steady-state
Particle model and CFD code	• No particle-particle interactions • Low solids-to-gas ratios (mass or volume) [e.g., < 10% particle volume fraction] • FLUENT (Lagrangian) particle model (DPM); inherently steady state and dilute phase	• Particle-particle interactions • Moderate to high solids-to-gas ratios • Multiphase (Eulerian-Eulerian) or two-fluid models required for transport reactors and CFBs; inherently transient
Grid sizes	Relatively small grids required: e.g., on the order of ~50,000 cells	Relatively small grids required: e.g., on the order of ~50,000 cells
Single case turnaround times	Order of hours ➔ CFD cases can be instantiated directly	Order of several days to weeks for dense-phase computations ➔ ROM required

- Steady-state CFD ➔ transient, CPU-intensive CFD: ROM required!

© Alstom 2009. All rights reserved. Information contained in this document is provided without liability for information purposes only and is subject to change without notice. No representation or warranty is given or to be implied as to the completeness of information or fitness for any particular purpose. Reproduction, use or disclosure to third parties, without express written authority, is strictly prohibited.

Reduced-Order Models (ROMs)
Outline of Options

- Typically much faster than CFD models (once constructed)
- Potential options include:
  - ROM building utility or “training harness” (under development by ANSYS): based on pre-computed CFD solutions over a range of parameter values
    - non-linear regression
    - artificial neural networks (ANN)
    - principal component analysis (PCA)
  - stirred reactor networks (e.g., RD’s ENERGICO™, Niksa’s ChemNet™)
  - network-of-zones (e.g., Bezzo, et al., 2004) models
  - simpler, reduced-dimensionality models (e.g., steady, 0-D, 1-D, 2-D, etc.)
  - models based on underlying PDEs / proper orthogonal decomposition (POD)
  - others?
- Lots of ROM options! Which should be applied to the current application?

© Alstom 2009. All rights reserved. Information contained in this document is provided without liability for information purposes only and is subject to change without notice. No representation or warranty is given or to be implied as to the completeness of information or fitness for any particular purpose. Reproduction, use or disclosure to third parties, without express written authority, is strictly prohibited.

ROM-Building Utility for Dense-Phase Systems
CPU Concerns

- CPU benchmark for dense-phase computation (Shi, et al., 2007)
  - 70,000-cell gasification FLUENT Eulerian-Eulerian model (single-particle size)
  - Run in parallel on 8 processors ➔ 5 sec of physical time per day
  - Each run required 8 to 10 days to achieve 40 sec of physical time (last 10 sec for time-averaged output)
- Sampling benchmark for entrained-flow gasifier (Malacina, 2008)
  - 3 independent inputs – (a) coal split between 2 stages, (b) ratio of oxygen to coal, and (c) water percentage in the slurry.
  - FLUENT was executed 30 times (Latin Hypercube sampling procedure)
  - However, the mass flow rates, temperatures, and compositions of the recycled streams constitute additional independent input variables (e.g., oxy-fired CFB may have 7 streams and ~18 or more independent variables)
  - Number of samples required will go up as the number of independent variables to some power
- Thus, for some systems, the total CPU burden of a ROM builder can be ~ same as direct instantiation!

© Alstom 2009. All rights reserved. Information contained in this document is provided without liability for information purposes only and is subject to change without notice. No representation or warranty is given or to be implied as to the completeness of information or fitness for any particular purpose. Reproduction, use or disclosure to third parties, without express written authority, is strictly prohibited.

Reduced-Order Models (ROMs)
Network Options

- Stirred reactor networks (e.g., RD's ENERGICO™, Niksa's ChemNet™)
  - Substantial development work remains for transient, dense-phase applications
  - Questions about radiation modeling and particle dispersion remain
  - Potential IP, royalties, or commercialization issues.
- Network-of-zones (e.g., Bezzo, et al., 2004) models
  - Hybrid multizonal/CFD approach pursued by PSE gProms
    - The reactor network and the CFD code represent the same equipment item.
    - The fluxes of material between zones and the impact of the mixing processes on properties are provided through CFD calculations,
    - The properties needed by the CFD domain are computed by the multizonal model
  - Subject of recent DOE University Coal Research Solicitation
- Significant methodology development remaining, particularly for dense-phase!

© Alstom 2009. All rights reserved. Information contained in this document is provided without liability for information purposes only and is subject to change without notice. No representation or warranty is given or to be implied as to the completeness of information or fitness for any particular purpose. Reproduction, use or disclosure to third parties, without express written authority, is strictly prohibited.

Reduced-Order Models (ROMs)
Other Simpler, Surrogate Code Options

- Simpler, reduced-dimensionality codes
  - 0-D to 3-D (steady-state) codes or 0-D to 1.5-D (unsteady) code option
  - Benyahia (2008): Removing the partial time derivative alone is insufficient
  - Steady-state currently in use by industry (e.g., Foster-Wheeler 0-D to 3-D)
- Option: External packages available (but not necessarily in public domain)
  - e.g., Alstom 1-D CFB code or Jens Hannes/IEA code – 1.5-D code
  - Requires (a) submodel/BC development and (b) CO custom-model wrapper
  - Permits (a) direct instantiation or (b) use with ROM builder
- Option: FLUENT derivatives ← *Alstom preferred option*
  - Transform the transient FLUENT 3-D code to a reduced-dimensionality package
  - Postulated that such a package, once calibrated/verified with a few runs of the parent 3-D CFD model ➔ suitable surrogate.
  - Already CO compliant
  - Permits (a) direct instantiation or (b) use with ROM builder

© Alstom 2009. All rights reserved. Information contained in this document is provided without liability for information purposes only and is subject to change without notice. No representation or warranty is given or to be implied as to the completeness of information or fitness for any particular purpose. Reproduction, use or disclosure to third parties, without express written authority, is strictly prohibited.

Reduced-Order Models (ROMs)
Limitations of Preferred Approach

- This is not a dense-phase code development project.
- Neither is this project a dense-phase code validation project
  - Very limited validation of FLUENT with the CFB (MTF) and public domain iron-oxide CL data
  - Limited attempt will be made to calibrate FLUENT results to data
- The project approach implies that the transient, 3-D, FLUENT code is *already* adequate (in terms of accuracy and capability) for dense-phase computations.
- The ROM is being developed by comparisons to the parent 3-D FLUENT code

© Alstom 2009. All rights reserved. Information contained in this document is provided without liability for information purposes only and is subject to change without notice. No representation or warranty is given or to be implied as to the completeness of information or fitness for any particular purpose. Reproduction, use or disclosure to third parties, without express written authority, is strictly prohibited.

www.power.alstom.com

POWER | ALSTOM