2008 University Coal Research (UCR)
Historically Black Colleges and Universities and
Other Minority Institutions (HBCU/OMI)
Contractors Review Conference

Model Predictive Control of Integrated Gasification Combined Cycle (IGCC) Power Plants

Principal Investigator: B. Wayne Bequette
Presented by: Priyadarshi Mahapatra

Rensselaer | Howard P. Isermann DEPARTMENT OF CHEMICAL AND BIOLOGICAL ENGINEERING

Pittsburgh, PA
June 10-11, 2008

Outline

- Project Objectives
- IGCC Background/ Current Scenario
- IGCC Baseline Case/ Description
- Plantwide dynamic simulation/ control - Methods
- Process control fundamentals
  - MPC
- IGCC - Control Challenges/ Motivation
- Dynamic Simulations & Analysis
  - ASU, Gasifier
- Educational Modules/Case-studies
  - Alstom, Claus Plant, Combined-cycle
- Collaborations

Project Objectives

- ASPEN Dynamics
  - Build flow/pressure driven models, coordinate with collaborators
  - Operability analysis
- Model Predictive Control
  - Individual unit (gasifier, ASU, combined cycle)
  - Plantwide & RT Optimization
- Educational Modules
  - Control, Design, MEB, Thermo
- Tie-in with other energy-related projects at RPI – fuel cells, etc. (long-term)

Integrated Gasification Combined Cycle (IGCC)

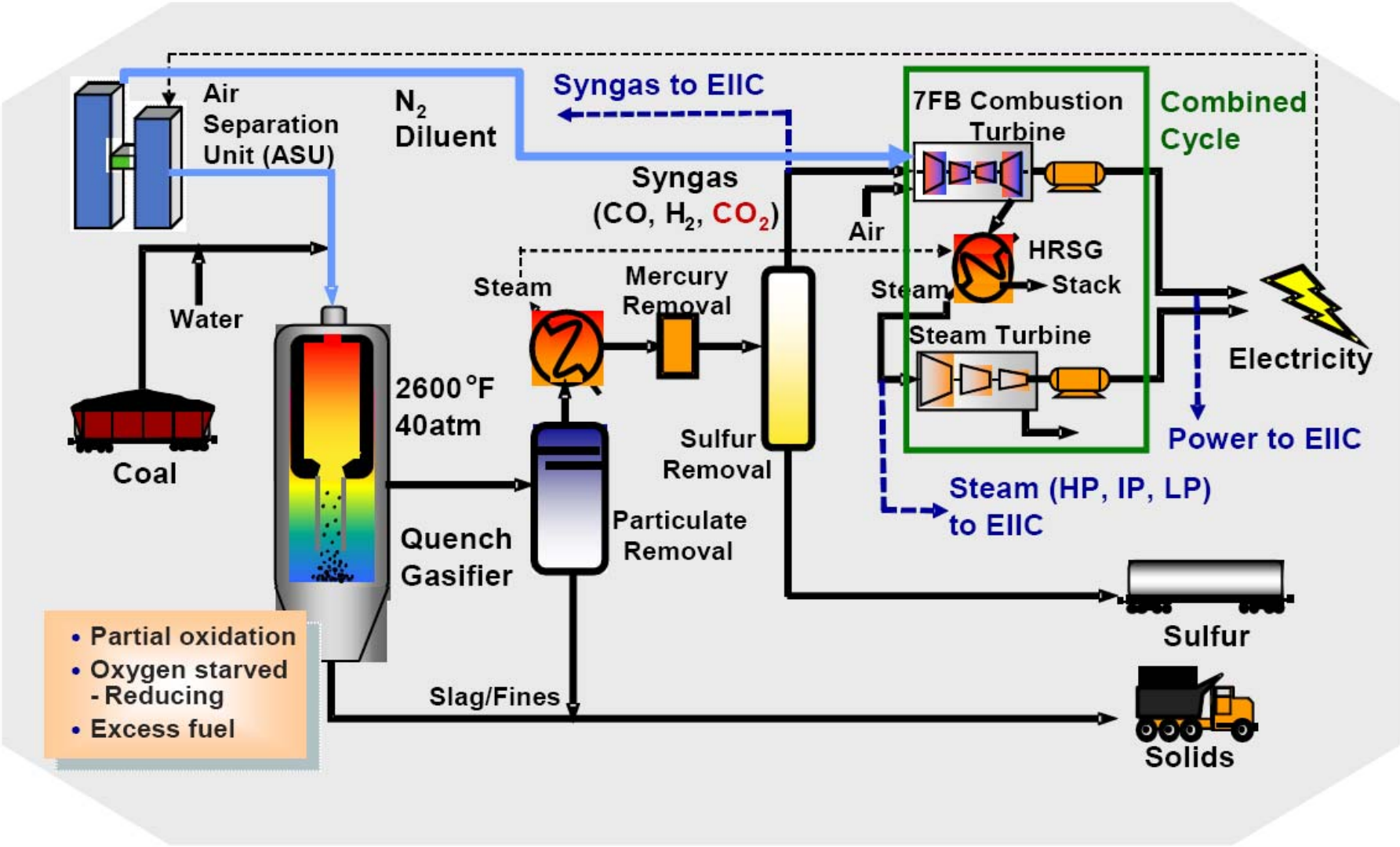

Zitney/NETL/Aspen UGM, Houston, TX, April 7-11, 2008

IGCC background (continued)

Conventional Coal Plant

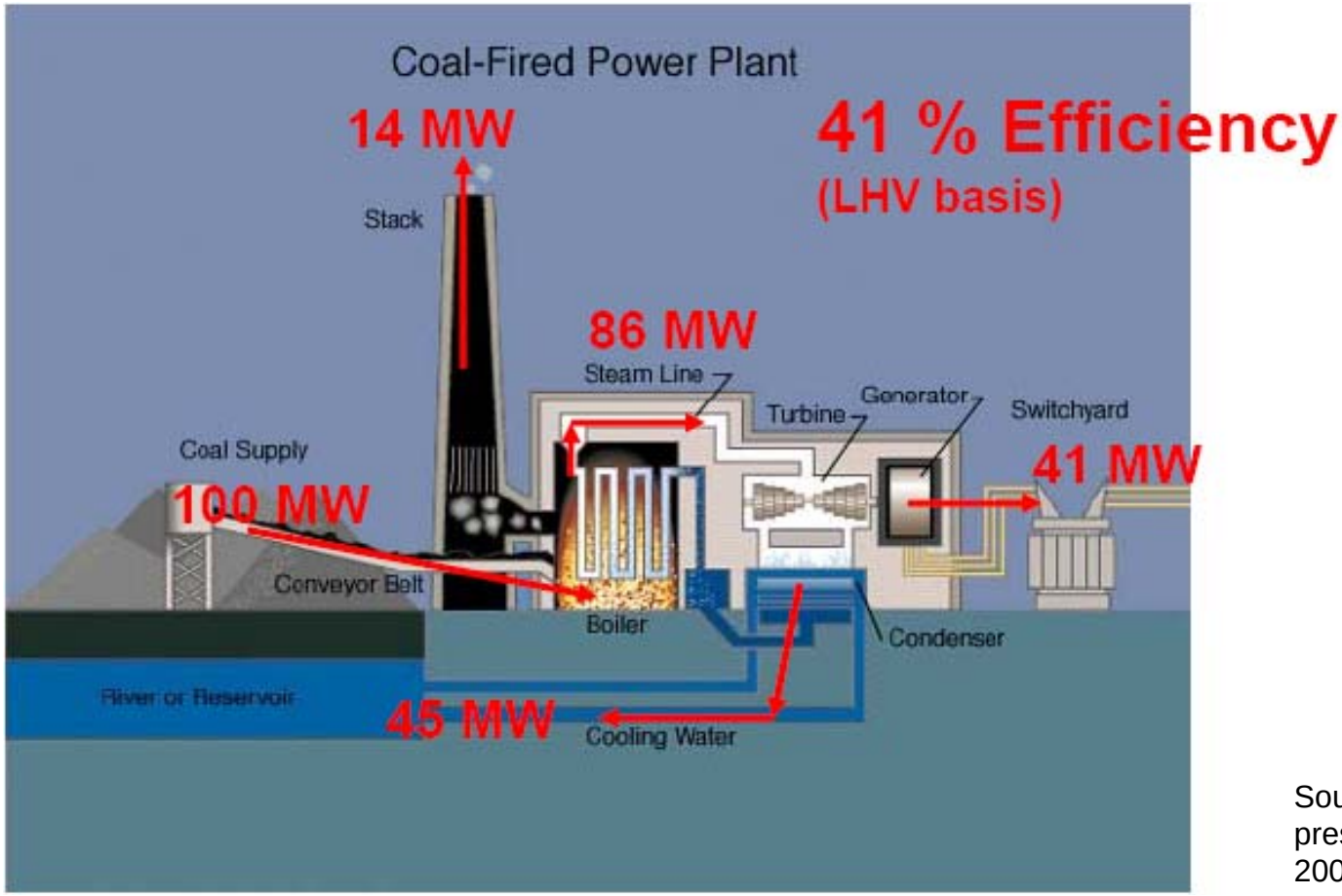

Source: Coal gasification 101, presented by Dr. Jeff Philips, 2005, Electric Power Research Institute Inc.

IGCC Background - Efficiencies

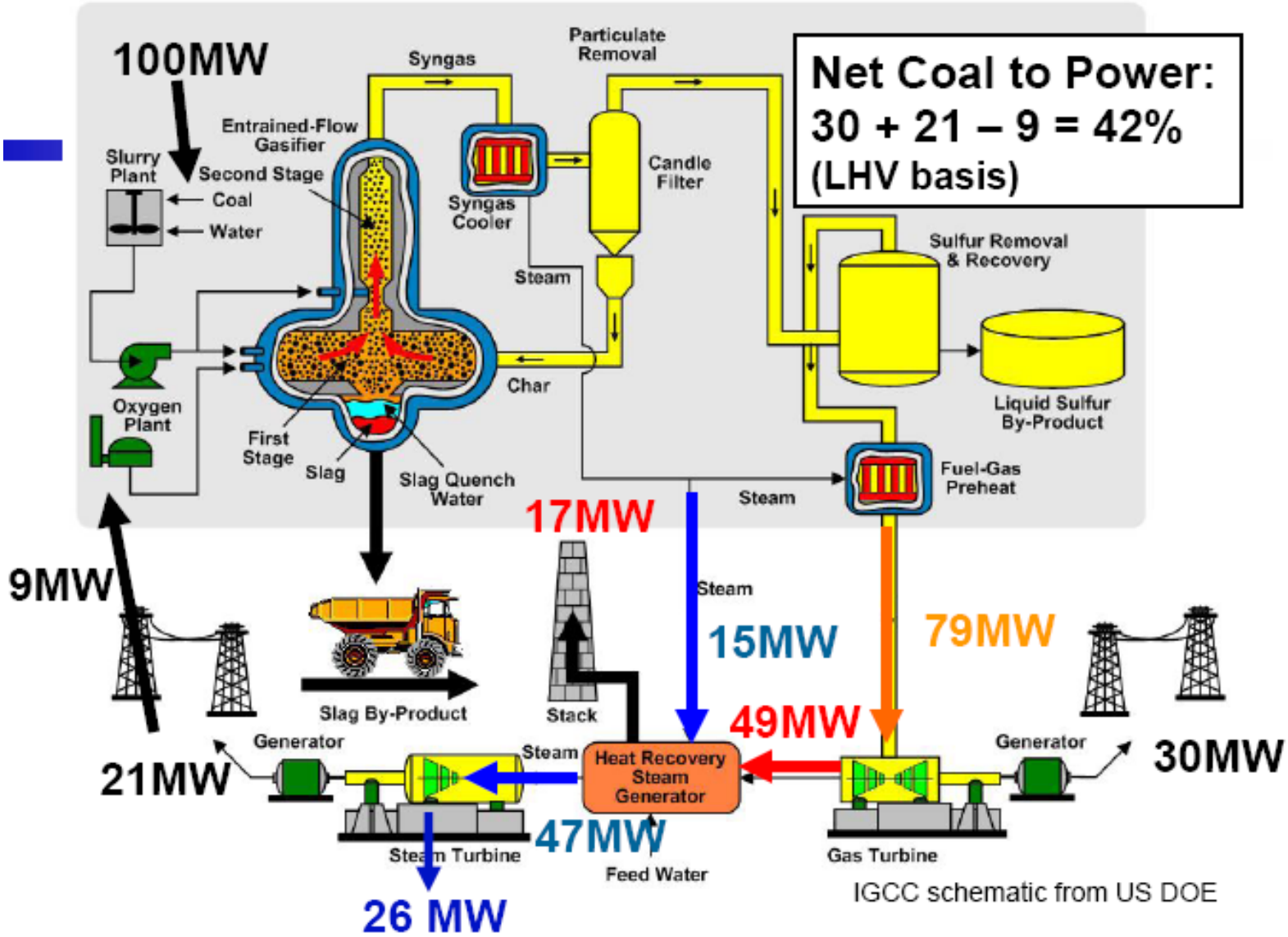

IGCC schematic from US DOE

Source: Coal gasification 101, presented by Dr. Jeff Philips, 2005, Electric Power Research Institute Inc.

IGCC - Current scenario

IGCC Power plants in US

- Wabash River Power Station, West Terre Haute, IN
- Polk Power Station, Tampa, FL (350 MW)
- Pinon Rine, Reno, NV (failed)

Wabash

Obstacles

- High cost (without carbon regulation)
- Political – Recent emerging IGCC emission controversy
- Supreme court decision requiring Environment Protection Agency to regulate carbon

Polk

Source: http://www.netl.doe.gov/technologies/coalpower/gasification/pubs/photo.html

IGCC - Current scenario (cont…)

Cost and Reliability

- High capital cost – $1490/KW (vs. $1290/KW for conventional)
- Running costs – $56/MW-hr (vs. $52/MW-hr)
- Including carbon capture cost - $79/MW-hr (vs. $95/MW-hr)
- Reliability – GE advanced ('F' type) turbines, handling of coal, GE energy solid-fed gasifier
- With carbon capture – cost of electricity up by 30% (vs. 68% increase in conventional)

Major successes

- Mitsubishi Heavy Industries (Japan), 250MW, G-type turbines, unburned carbon to PRB coal ratio < 0.1%, no trace elements
- Buggenum plant (Netherland), 250MW, 30% biomass feedstock (incentives), class 'F' turbines

Nuon Power Buggenum

Source: http://www.netl.doe.gov/technologies/coalpower/gasification/pubs/photo.html

Coal-Fired Power Generation Baseline System

IGCC without Carbon Capture

Baseline Case	IGCC Case #1
Fuel	Illinois #6 Coal
Oxidant	95% Oxygen
Gasifier	GE "Radiant Only"
H_2S Separation	Selexol AGR
Sulfur Recovery	Claus Plant
Gas Turbine	2 x GE 7FB (232 MW output each)
Gas Turbine Firing Temperature	2,450 ºF
Gas Turbine Pressure Ratio	16.1 : 1
Subcritical Steam Cycle	1,800 psig/1,050ºF/1,050ºF
Power Output	640 MWe (net)

"Cost and Performance Baseline for Fossil Energy Power Plants Study, Volume 1: Bituminous Coal and Natural Gas to Electricity,"National Energy Technology Laboratory, www.netl.doe.gov, May 2007.

Plant-wide IGCC simulation superstructure

Aspen Plus Steady-State

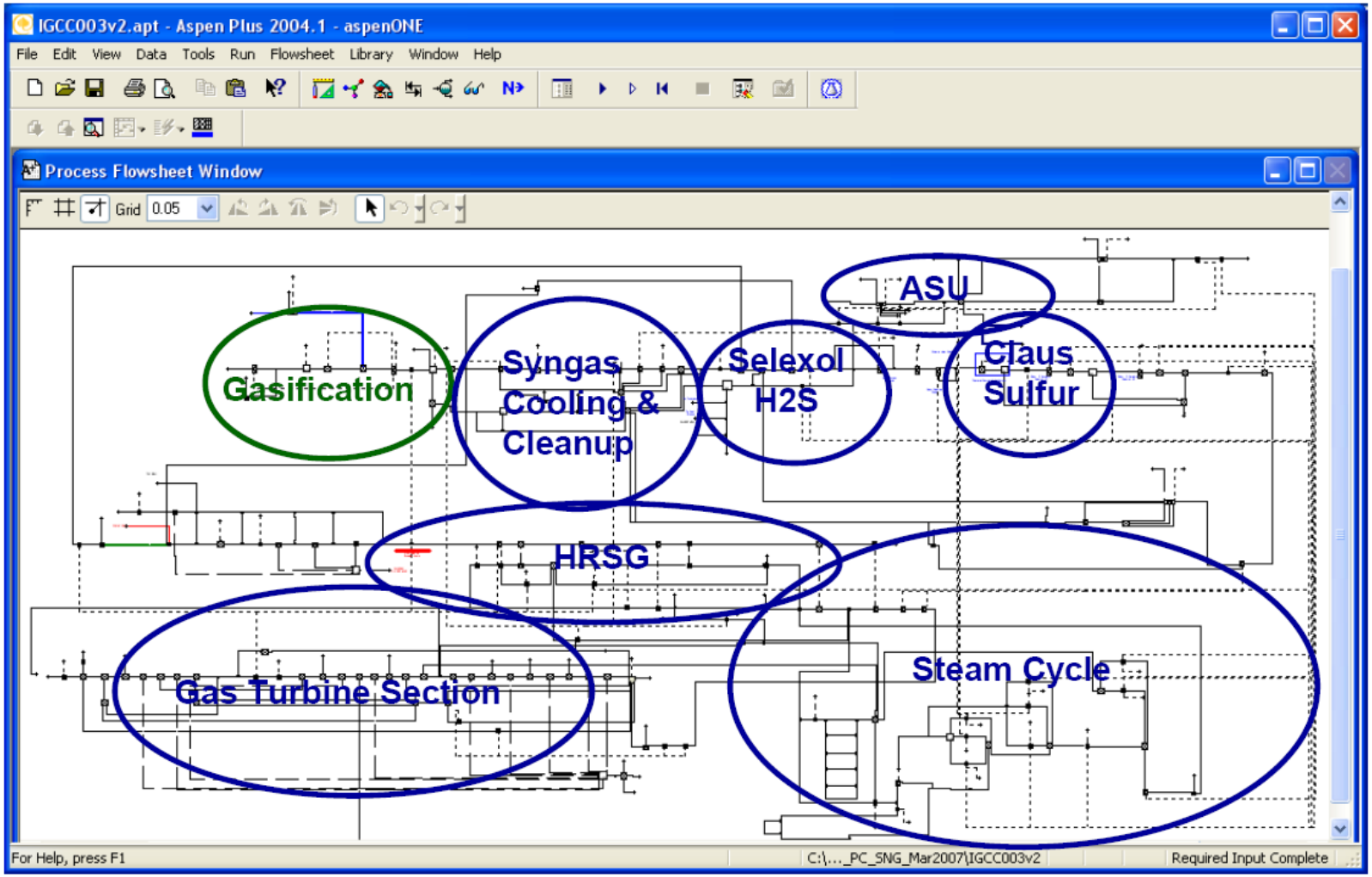

263 Units, 436 Streams, SS Simulation Time (on 2.4 GHz, Core2Duo processor) ~ 2.5 min

Plant-wide IGCC Simulation

Aspen Plus to Aspen Dynamics to MATLAB

IGCC Base Case in Aspen Plus

Modify base case

Separate Sub-sections

Prepare for export to Aspen Dynamics

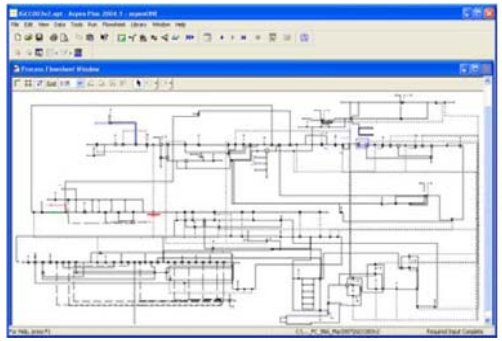

Process.bkp

Export Simulation

Add simple inventory control PID loops

Identify relevant inputs-outputs

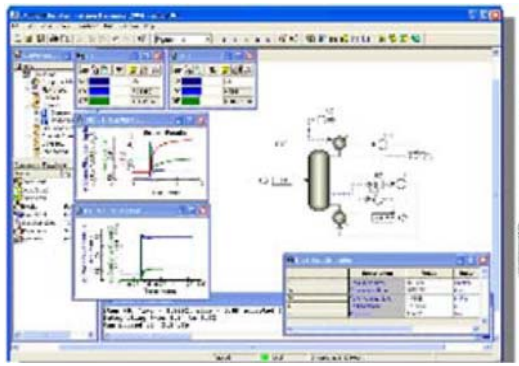

Process.dynf

ProcessDYN.appdf

Interface w/ MATLAB/Simulink

Implement control strategies

PLANT-WIDE

Interconnect sub-sections

Decentralized plant-wide MPC and MMPC

Process Control

Fundamentals

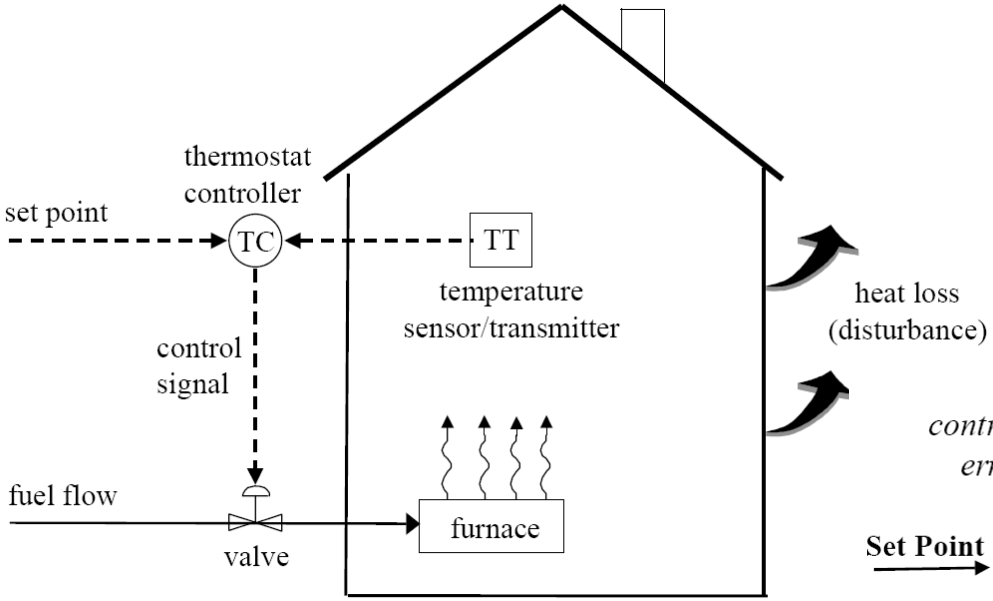

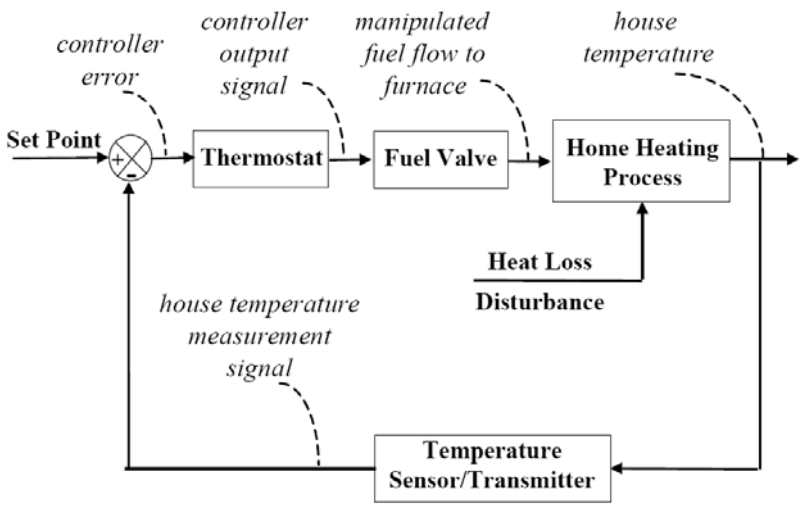

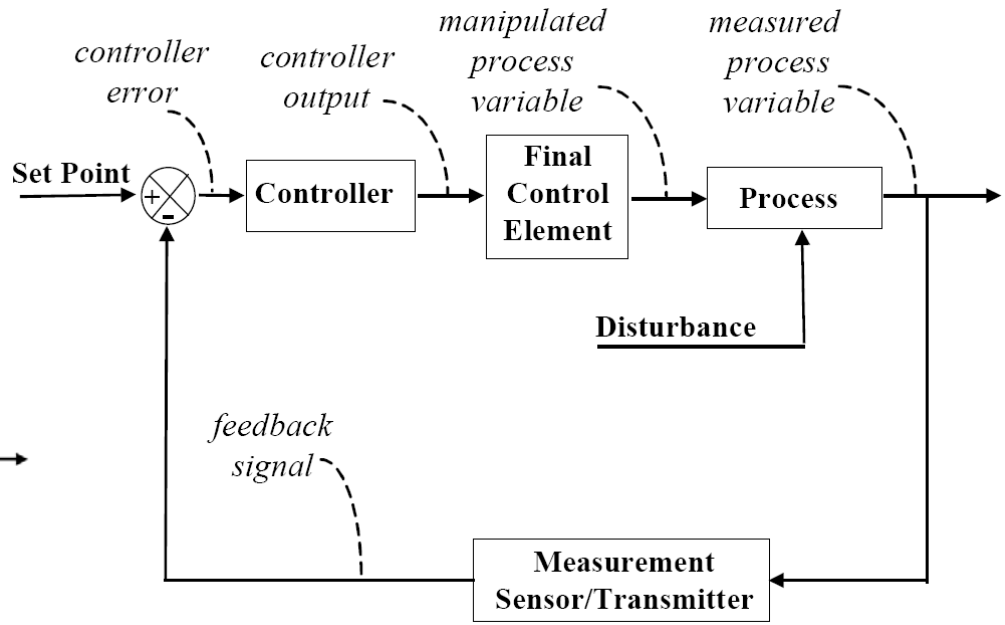

Model Predictive Control (MPC)

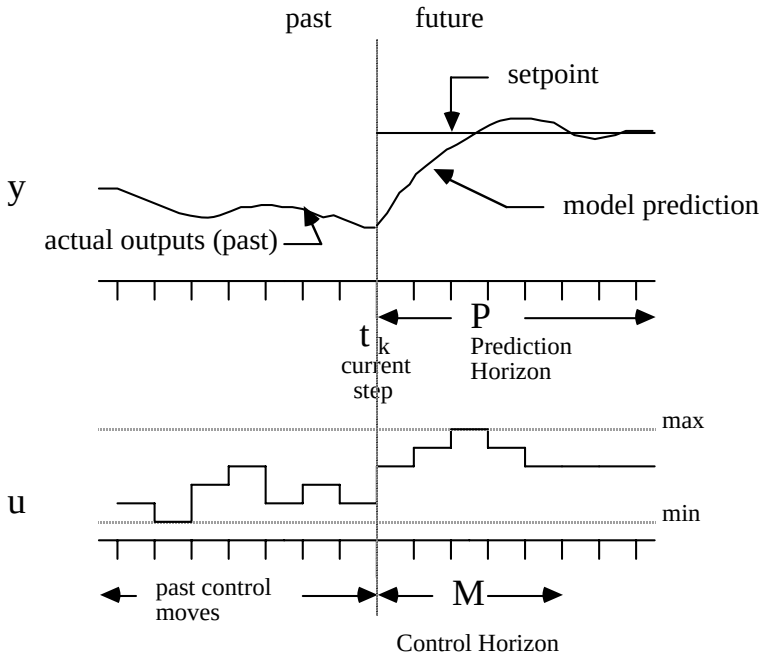

Find current and future control moves that best meet a desired future output trajectory. Implement first control move.

This is a major issue – "disturbances" vs. model uncertainty

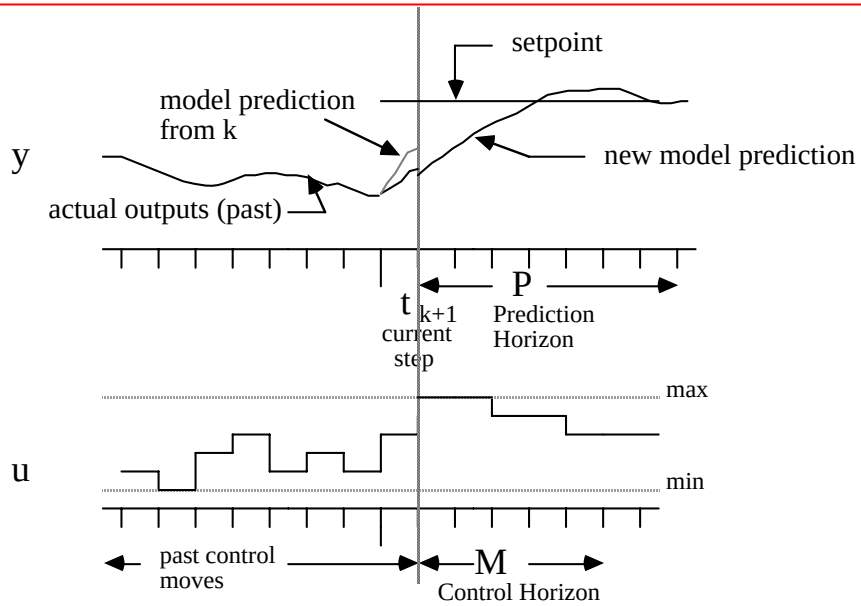

At next sample time:

Correct for model mismatch, then perform new optimization.

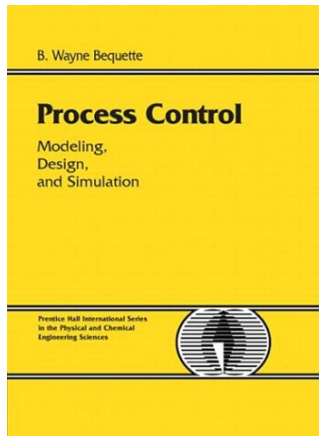

IGCC – Control Challenges

- Start-up and shut-down
  - Planned and unplanned
- Constraints
  - Absolute and rate-of-change
- Varying loads
- Variations in coal quality
- Process integration
  - Air from CC turbine/compressor to ASU
  - ASU nitrogen to CC turbine
- Multirate, multi-time scale

Air Separation Unit (ASU)

Role in IGCC power plants

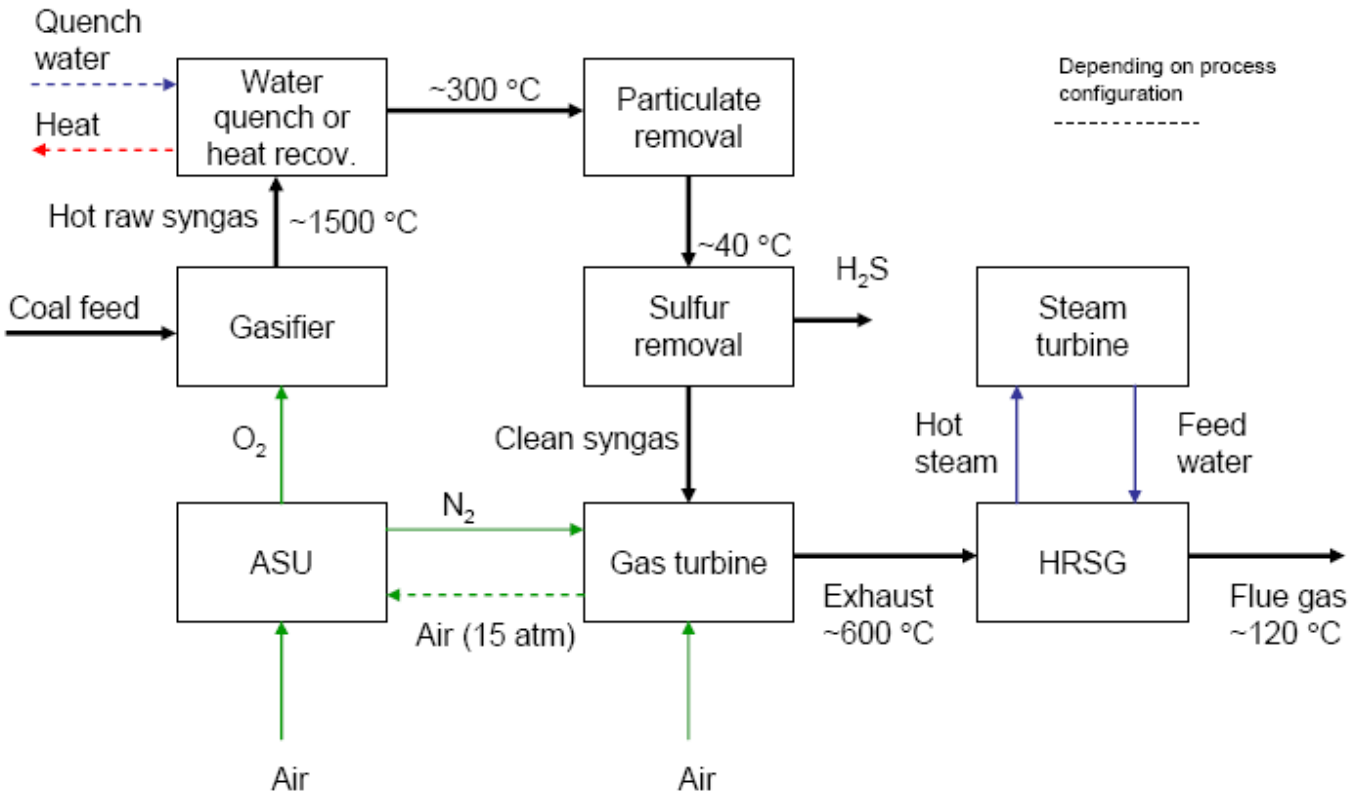

Universal Industrial Gases, Inc. ASU plant, PA

- Supplies oxygen to gasification island/ sulphur removal processes
- Optimal integration with gas turbine – efficiency
- Higher integration – control problems

Source: Ola Maurstad (2005), MIT LFEE 2005-002 WP

ASU - Process flowsheet/variables

Aspen Dynamics

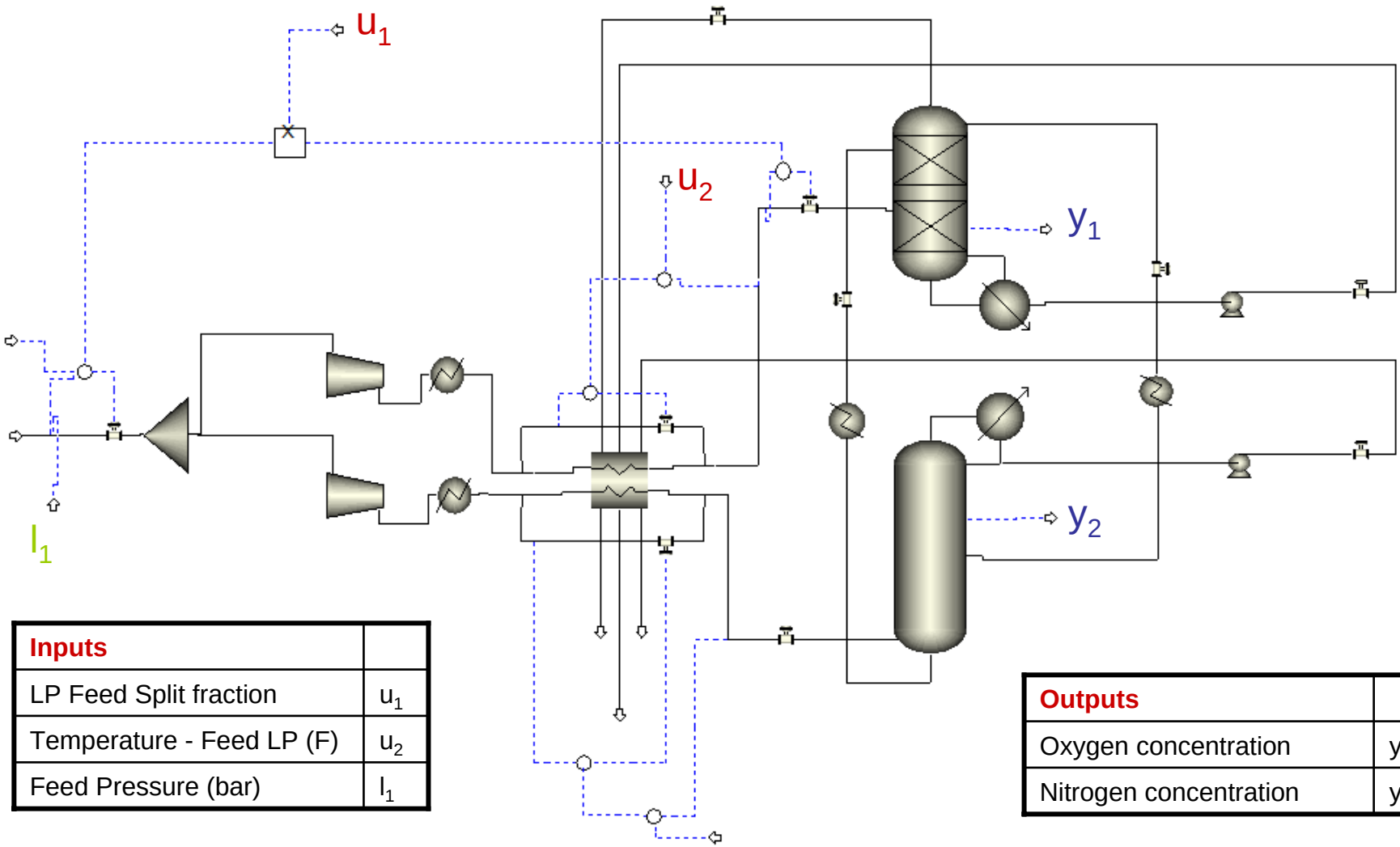

Inputs	
LP Feed Split fraction	u_1
Temperature - Feed LP (F)	u_2
Feed Pressure (bar)	l_1

Outputs	
Oxygen concentration	y_1
Nitrogen concentration	y_2

ASU - Condenser-reboiler heat integration

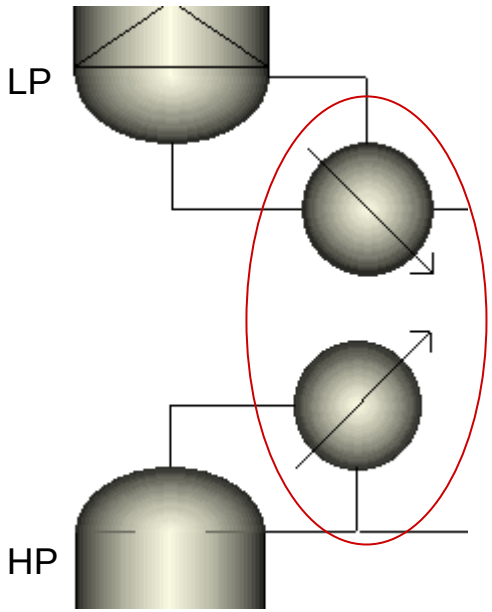

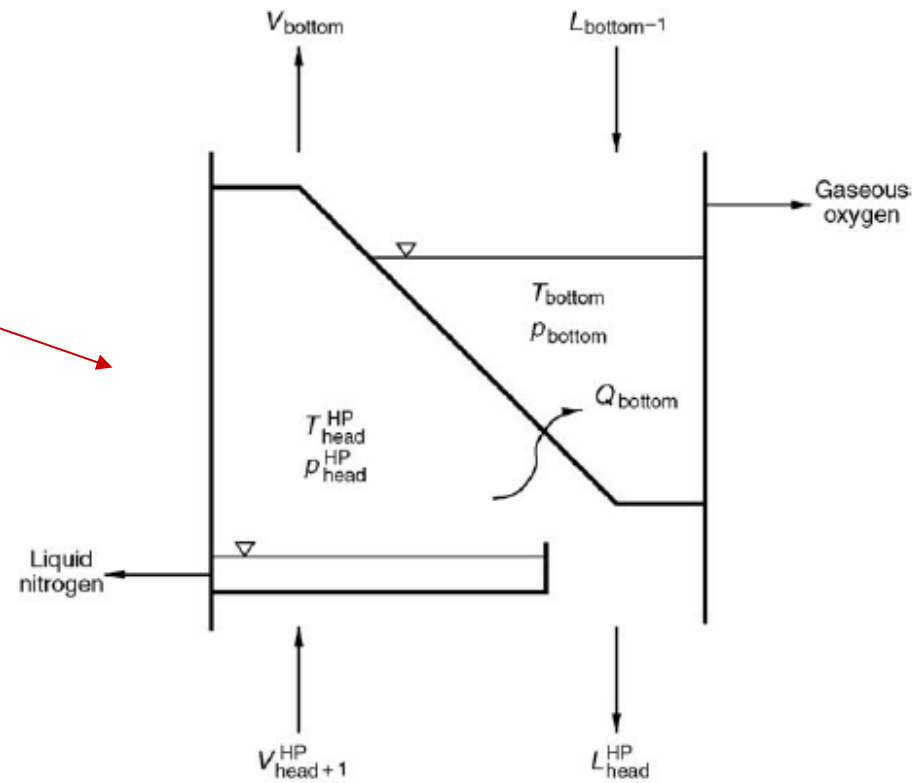

$$Q_{reb}^{LP} = -Q_{cond}^{HP} \left(= Q_{bottom} \right)$$

$$Q_{bottom} = UA\left(T_{head}^{HP} - T_{bottom} \right)$$

Source: B. Seliger et al., *Separation and Purification Technology* 49 (2006) 136-148

ASU - Process flowsheet/variables

Aspen Dynamics to Matlab/Simulink

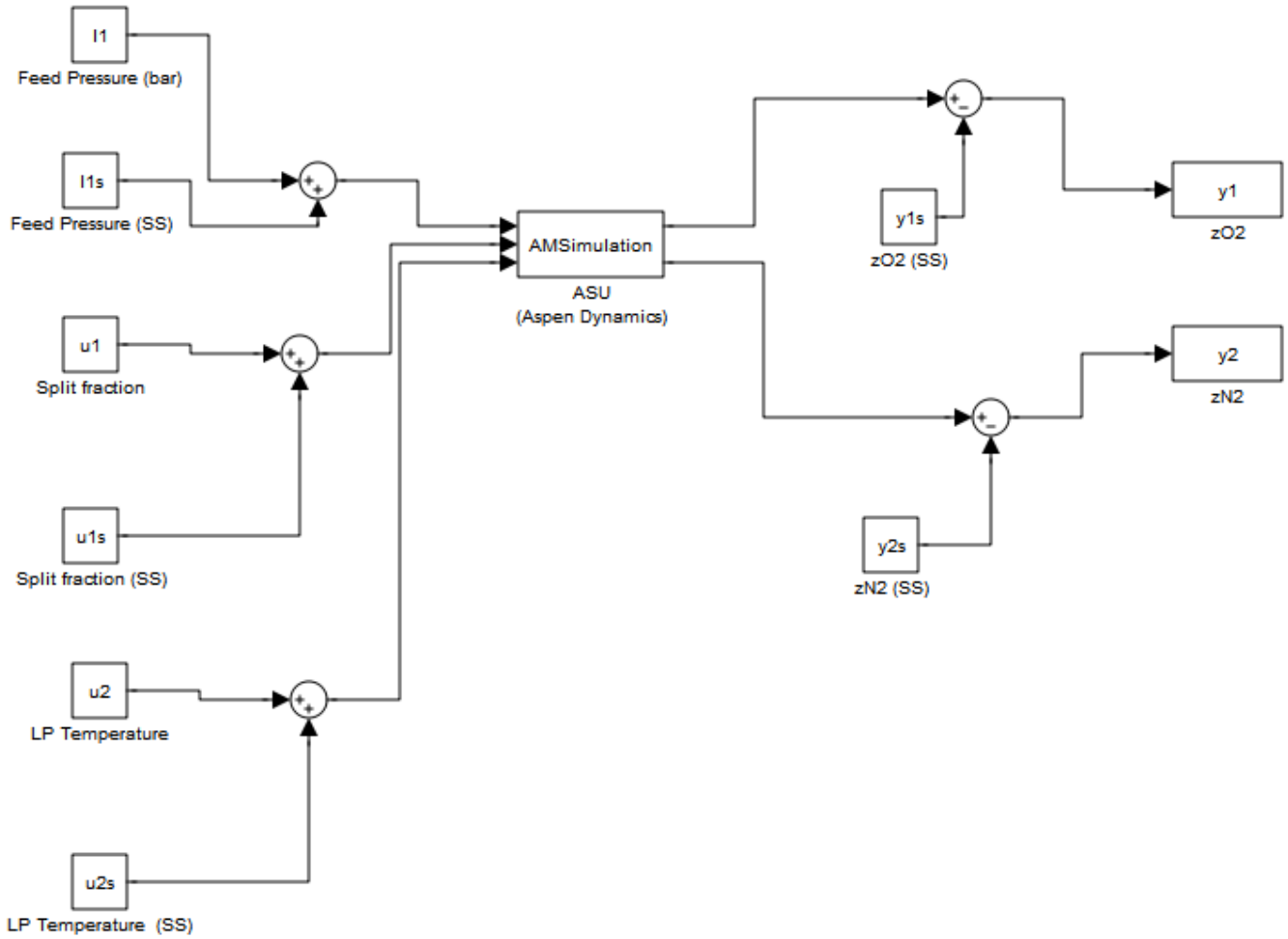

Air Separation Unit - MPC results

Controlling oxygen purity

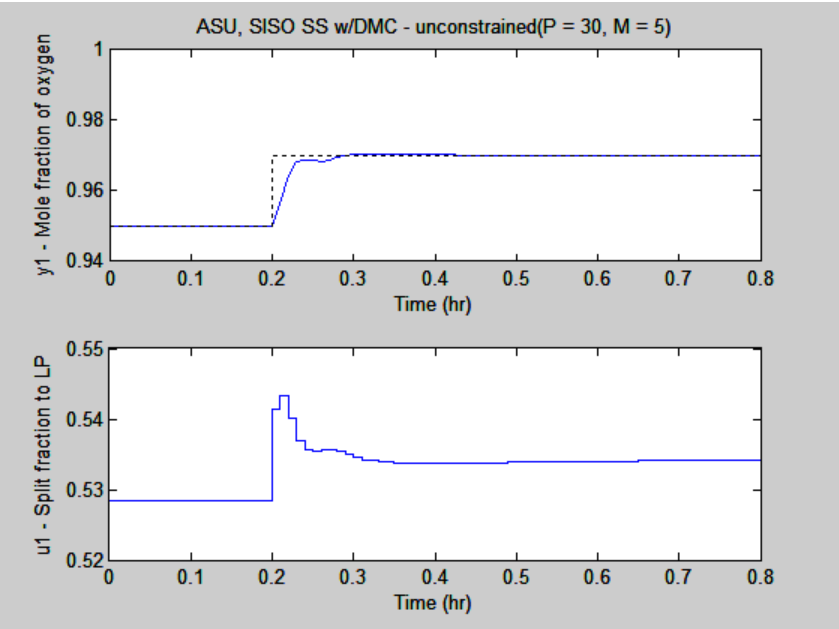

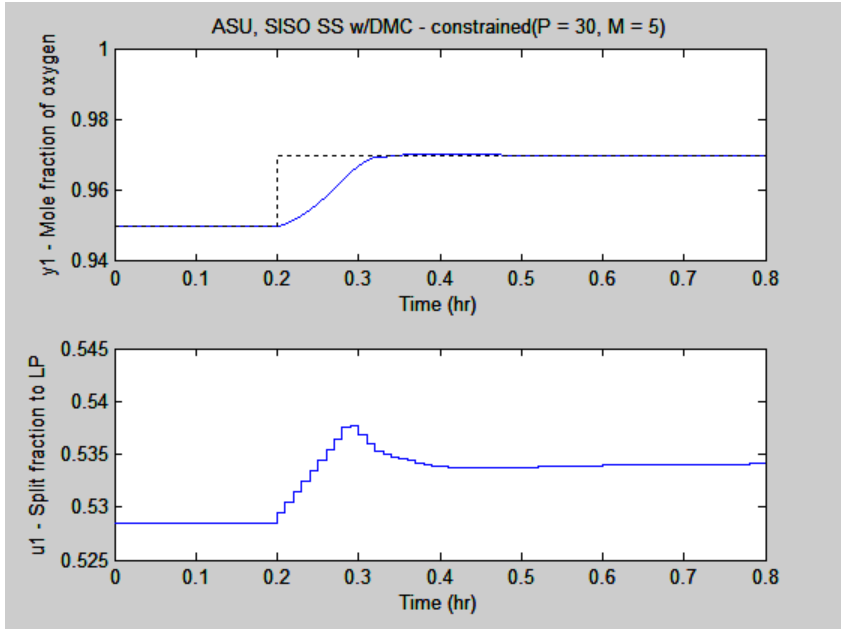

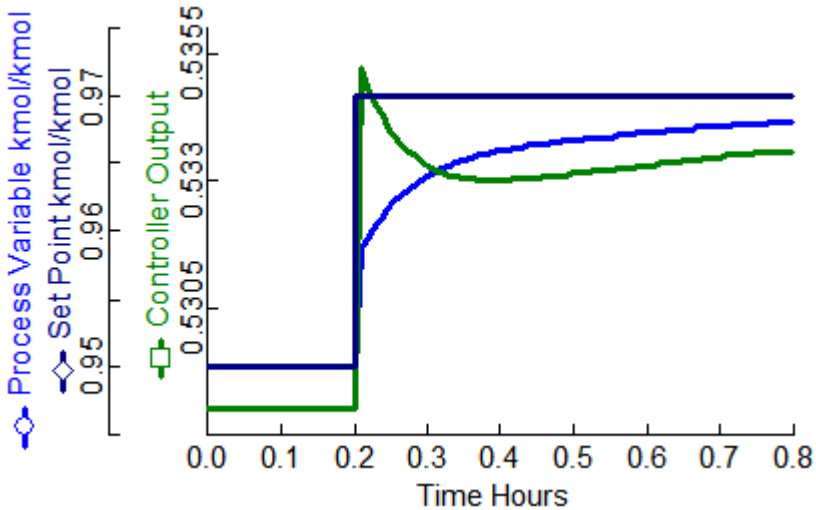

Set-point increase in mole fraction of oxygen – from 95% to 97%

Air Separation Unit - MPC results

Controlling both oxygen and nitrogen purities

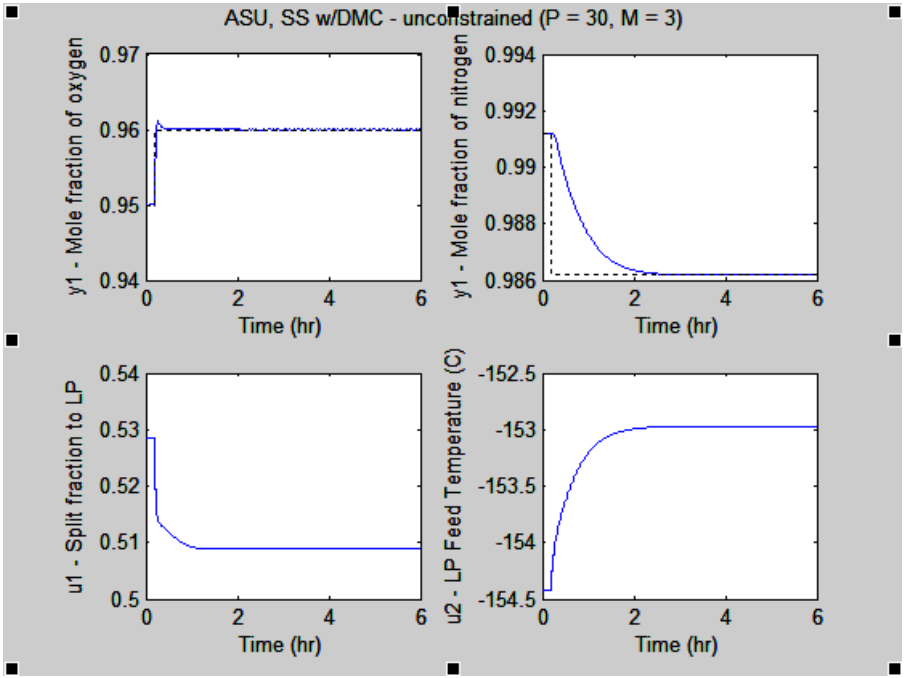

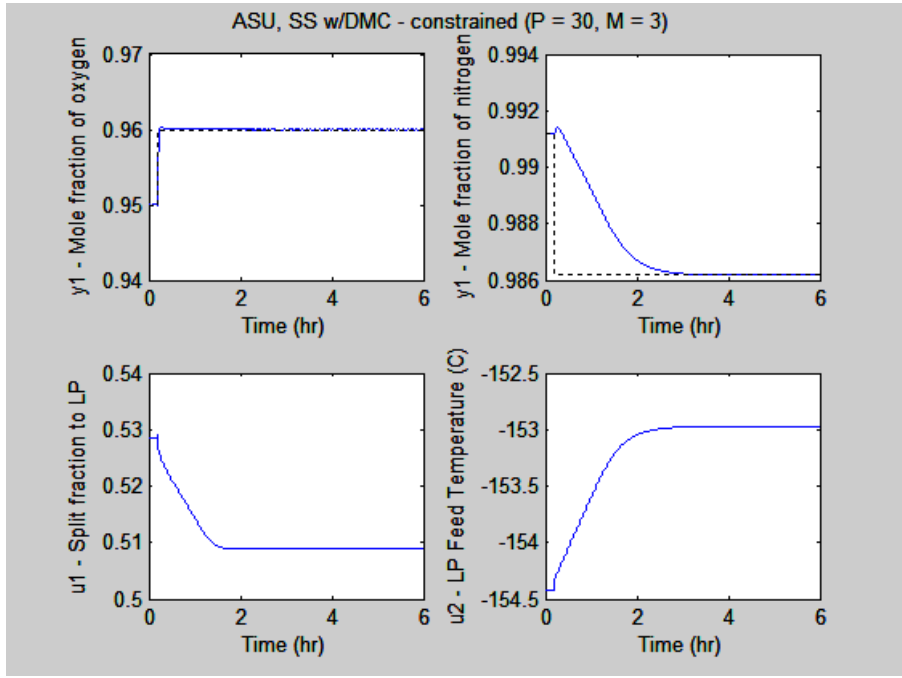

Set-point increase in mole fraction of oxygen – from 95% to 96% and decrease in mole fraction of HP-nitrogen from 99.1% to 98.6%

Operability - Subsection: GASIFIER

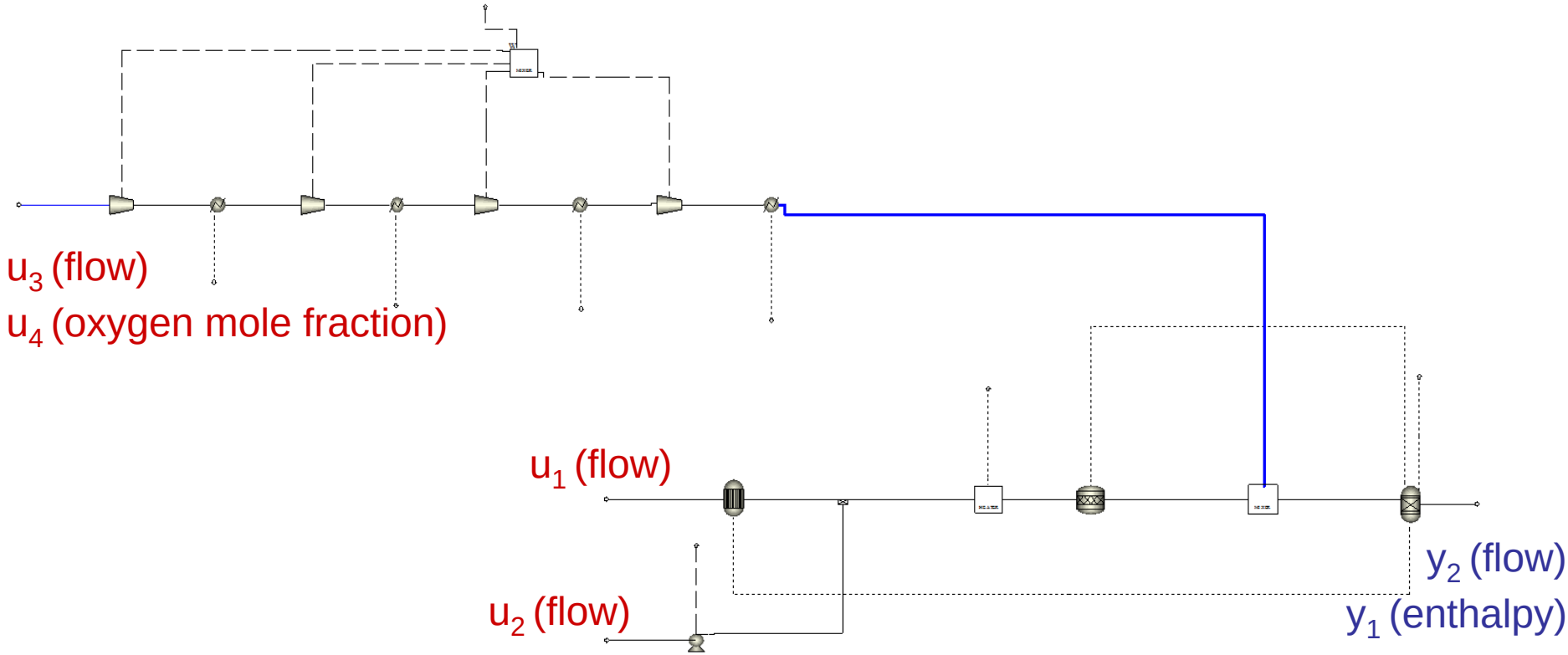

Input	Desc.	SS Value	Limits
u_1	Coal flowrate, Fm, lb/hr	489690	± 20%
u_2	Slurry water flowrate, Fm, lb/hr	201165	± 20%
u_3	Oxygen flowrate, Fm, lb/hr	104700	± 20%
u_4	Oxygen mole fraction, ZnO_2	0.95	0.93 to 0.97

Input	Desc.	SS Value	Limits
y_1	Raw syngas enthalpy, h, Btu/lb	-1810.935	± 20%
y_2	Raw syngas flow, h, lb/hr	1047000	± 20%

Operability - Subsection: GASIFIER

$$K = \begin{bmatrix} 0.0046\ \text{Btu-hr/lb}^2 & -0.0028\ \text{Btu-hr/lb}^2 & -0.0041\ \text{Btu-hr/lb}^2 & -2422\ \text{Btu/hr} \\ 0.89 & 1 & 1 & 0\ \text{lb/hr} \end{bmatrix}$$

$$K_{scaled} = \begin{bmatrix} 1.2441 & -0.3125 & -0.9312 & -0.1338 \\ 0.4164 & 0.1921 & 0.3915 & 0 \end{bmatrix}$$

$$= \underbrace{\begin{bmatrix} -0.9991 & -0.0430 \\ -0.0430 & 0.9991 \end{bmatrix}}_{\text{left singular vector matrix}} \underbrace{\begin{bmatrix} 1.5920 & 0 & 0 & 0 \\ 0 & 0.5996 & 0 & 0 \end{bmatrix}}_{\text{singular value matrix}} \underbrace{\begin{bmatrix} -0.7920 & 0.6046 & 0.0578 & 0.0625 \\ 0.1909 & 0.3425 & -0.9188 & -0.0443 \\ 0.5738 & 0.7191 & 0.3895 & -0.0448 \\ 0.0840 & 0.0096 & -0.0270 & 0.9961 \end{bmatrix}}_{\text{right singular vector matrix}}$$

For (u_2,u_3) and (y_1,y_2)

$$K_{scaled} = \begin{bmatrix} -0.3125 & -0.9312 \\ 0.1921 & 0.3915 \end{bmatrix}$$

$$\Lambda = \begin{bmatrix} -2.1626 & 3.1626 \\ 3.1626 & -2.1626 \end{bmatrix}$$

$$= \underbrace{\begin{bmatrix} -0.9149 & 0.4038 \\ 0.4038 & 0.9149 \end{bmatrix}}_{\text{left singular vector matrix}} \underbrace{\begin{bmatrix} 1.0734 & 0 \\ 0 & 0.0527 \end{bmatrix}}_{\text{singular value matrix}} \underbrace{\begin{bmatrix} 0.3386 & 0.9409 \\ 0.9409 & -0.3386 \end{bmatrix}}_{\text{right singular vector matrix}}$$

Input	Desc.	SS Value	Limits
u_1	Coal flowrate, Fm, lb/hr	489690	± 20%
u_2	Slurry water flowrate, Fm, lb/hr	201165	± 20%
u_3	Oxygen flowrate, Fm, lb/hr	104700	± 20%
u_4	Oxygen mole fraction, ZnO_2	0.95	0.93 to 0.97

Input	Desc.	SS Value	Limits
y_1	Raw Syngas enthalpy, h, Btu/lb	-1810.935	± 20%
y_2	Raw syngas flow, Fm, lb/hr	1047000	± 20%

Gasifier Section

Aspen Plus

Forrest Churchill

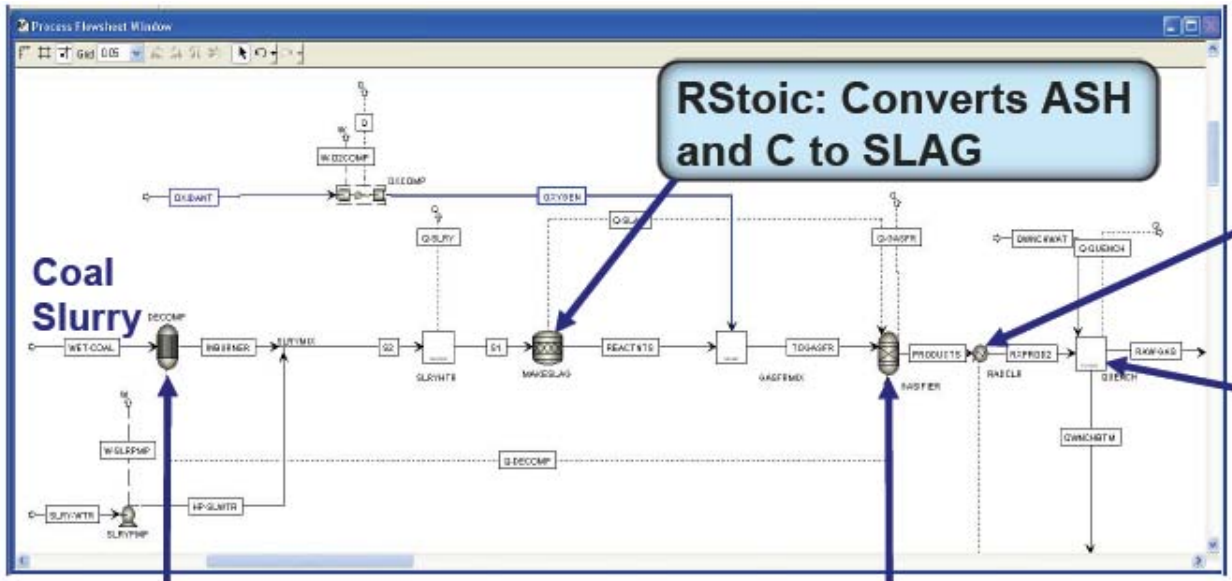

RYield: Ultimate analysis used to convert coal to constituent species {H2O, ASH, H2, N2, O2, C(CISOLID), S(CISOLID)}

RGibbs: Restricted chemical equilibrium used with temperature approaches

- $C + O_2 \leftrightarrow CO_2$ (Combustion)
- $C + 0.5O_2 \leftrightarrow CO$ (Combustion)
- $H_2 + S \leftrightarrow H_2S$
- ➢ $H_2O + CO \leftrightarrow CO_2 + H_2$ (Water Gas Shift)
- ➢ $CH_4 + H_2O \leftrightarrow 3H_2 + CO$ (Reforming)
- ➢ $N_2 + 3H_2 \leftrightarrow 2NH_3$
- ➢ $COS + H_2O \leftrightarrow CO_2 + H_2S$

Forrest Churchill

Gasifier Section

- Removal of unconventional components
- Addition of pumps & valves for pressure-driven simulations
- Revise flowsheet for ASPEN DYNAMICS
- Design controllers
- Integrate gasifier back into overall flowsheet

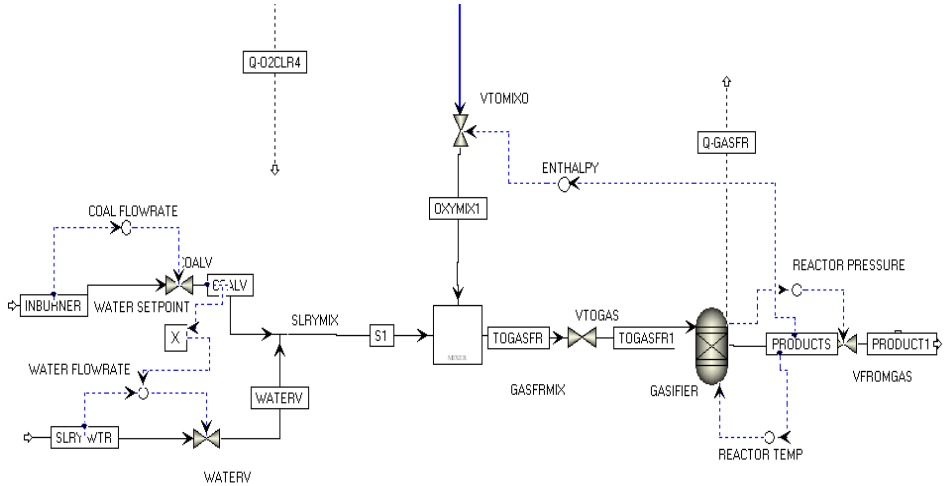

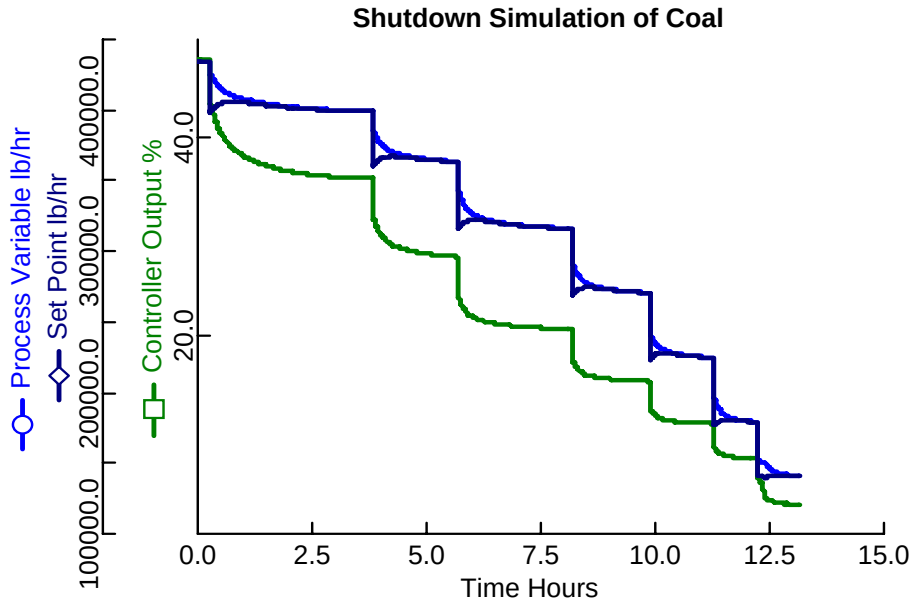

Alstom Case Study

Ryan Andress

- Problem statement for students
- Example solution for instructors

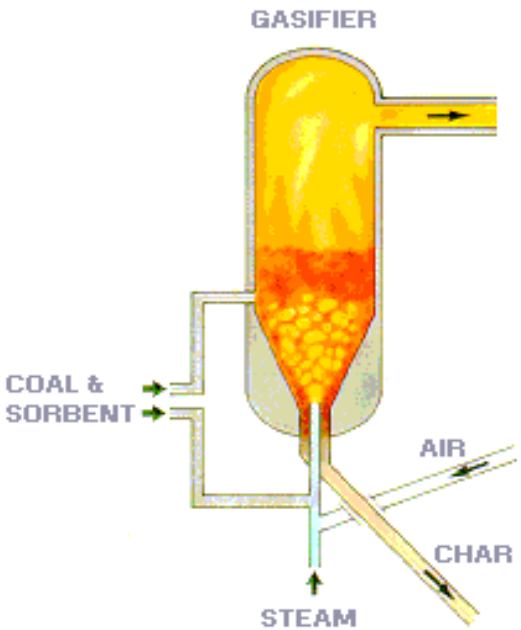

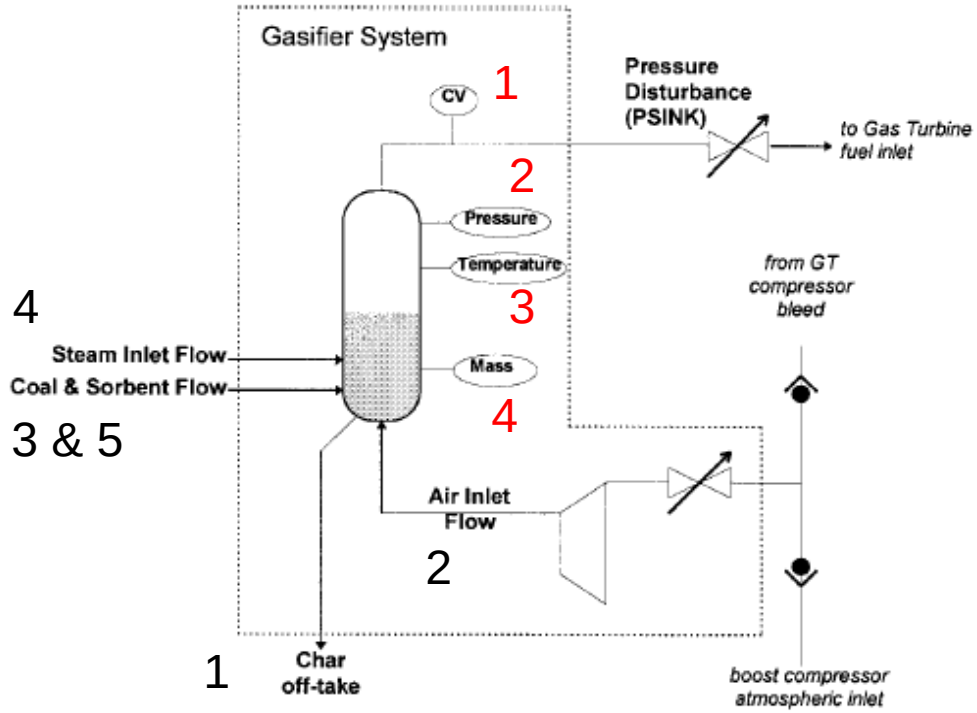

Dixon et al., Proc. Instn. Mech. Engrs., 214, Part I, 389-394 (2000)

Claus Plant

Ryan Andress
Lealon Martin

- Educational Modules & Homework
  - Material & Energy Balances Course
- Optimization & Control
  - Effect of Burner By-pass

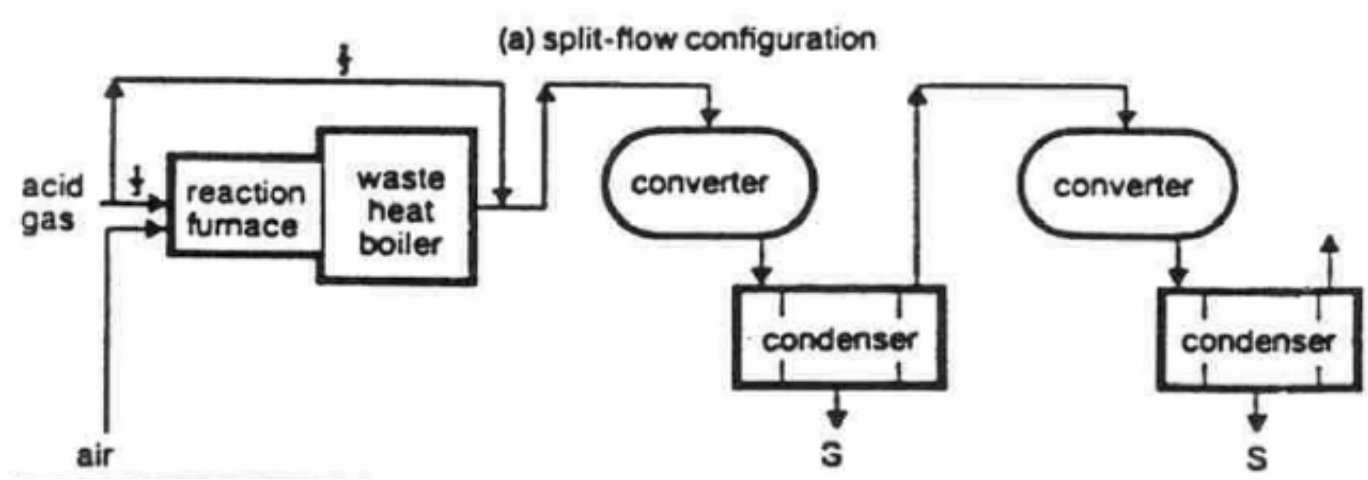

Joe Grimaldi

Combined Cycle Power

- Educational Modules & Homework
  - Material & Energy Balances and Thermo Courses
  - Process Dynamics and Control Courses

Presentations

P. Mahapatra and B.W. Bequette “Modeling and Control of an Air Separations Unit for an IGCC Power Plant,” 2007 AIChE Annual Meeting, Salt Lake City (November, 2007).

P. Mahapatra and B.W. Bequette “Effect of Gas-Turbine ASU Integration in Dynamics and Control of IGCC Power Plants,” 2008 Pittsburgh Coal Conference (September, 2008; *submitted*).

P. Mahapatra and B.W. Bequette “Dynamics and Control of Air Separations Unit-Gas Turbine-Gasifier Integrated Power Cycle of IGCC Power Plants,” 2008 AIChE Annual Meeting (November, 2008; *submitted*).

Collaborative Efforts

- Turton & co-workers: Dynamic Simulator for an Energy-Intensive Industry Cluster
  - ASPEN Dynamics: flow-driven, pressure-driven
- Ydstie & co-workers: Plant-wide Control and RTO
- Beigler & co-workers

Acknowledgement

Thank You