Fifth Annual Conference on Carbon Capture & Sequestration

Steps Toward Deployment

Capture Membranes (2)

Membrane Selection and Placement for Optimal CO_2 Capture from IGCC Power Plants

John J. Marano, Consultant/TMS
Jared P. Ciferno, U.S. DOE

National Energy Technology Laboratory

May 8-11, 2006 • Hilton Alexandria Mark Center • Alexandria, Virginia

This presentation was prepared as an account of work sponsored by an agency of the United States Government. Neither the United States Government nor any agency thereof, nor any of their employees, makes any warranty, express or implied, or assumes any legal liability or responsibility for the accuracy, completeness, or usefulness of any information, apparatus, product, or process disclosed, or represents that its use would not infringe privately owned rights. Reference therein to any specific commercial product, process, or service by trade name, trademark, manufacturer, or otherwise does not necessarily constitute or imply its endorsement, recommendation, or favoring by the United States Government or any agency thereof. The views and opinions of authors expressed therein do not necessarily state or reflect those of the United States Government or any agency thereof.

NETL Membrane System Studies

- **NETL currently conducting quantitative engineering assessments of H_2/CO_2 membrane separation technologies**
  - Could be used to capture CO_2 from advanced IGCC power plants and produce H_2
- **Membrane materials of interest include:**
  - Existing and advanced polymers
  - Pd metal alloys & cermet composites
  - Zeolite molecular sieves
- **Objectives:**
  - Compare to state-of-the-art IGCC power plants employing existing CO_2 capture technology
  - Improve performance and lower cost of CO_2 capture
  - Determine which process design and development factors are most critical for successful deployment of these technologies

Provide technical guidance to DOE project managers and researchers

Technical Challenges
Key Challenges

- **Membranes being considered are at bench-scale**
  - Key parameters are un-optimized or may be unknown
- **Other technologies under development may impact selection of a H_2/CO_2 separation technology**
  - Higher-pressure gasifiers
  - Warm gas clean-up systems
  - May or may not complement membrane separation
- **Trade-offs exist between product purity, recovery and delivery pressure**
  - Placement of membrane unit in process flowsheet critical
  - Other analyses have tried to interchange Selexol process with membrane-based process - ***Not the best approach***
  - However, not feasible to consider all combinations of parameters and configurations

Pre-Combustion Current Technology

IGCC Power Plant with CO_2 Scrubbing

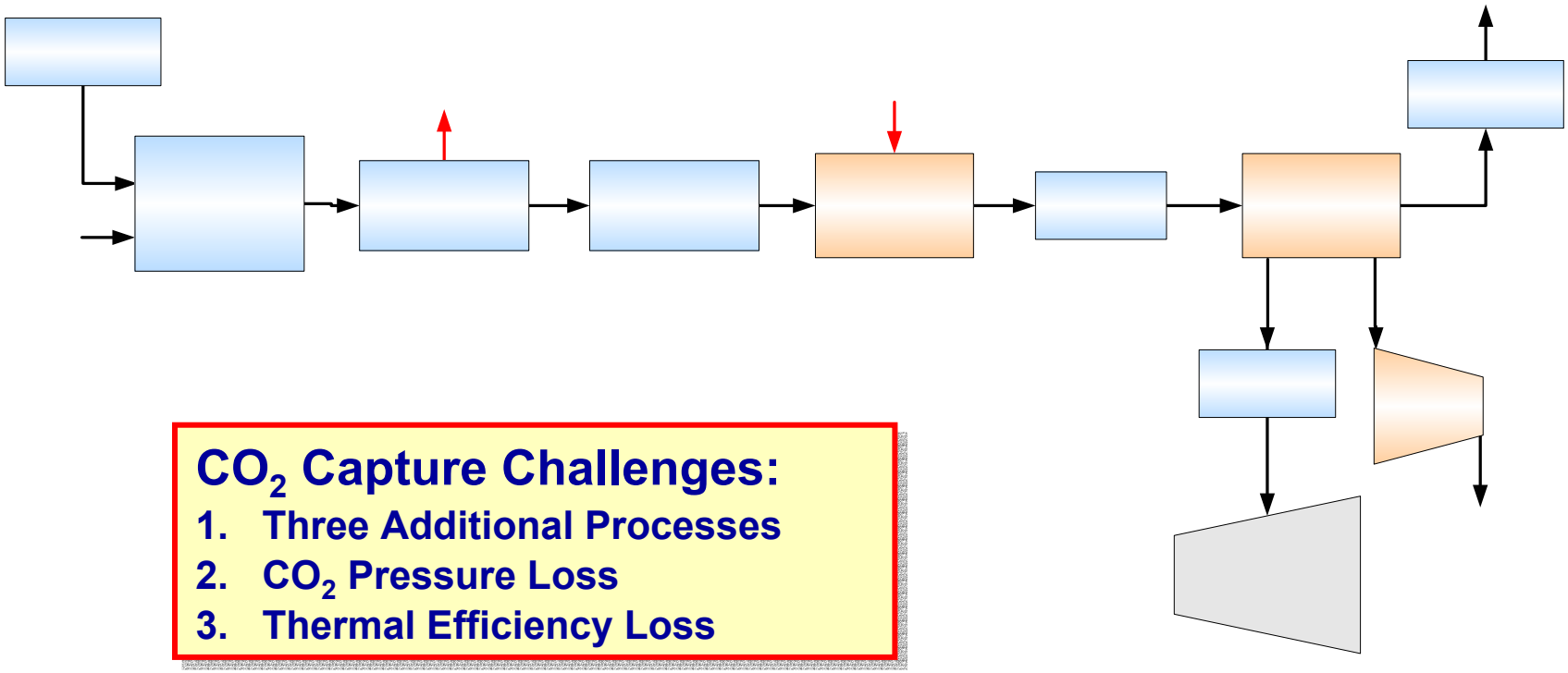

CO_2 Capture Challenges:

1. Three Additional Processes
2. CO_2 Pressure Loss
3. Thermal Efficiency Loss

Cryogenic ASU

Possible Location of Membrane Module in IGCC Plant

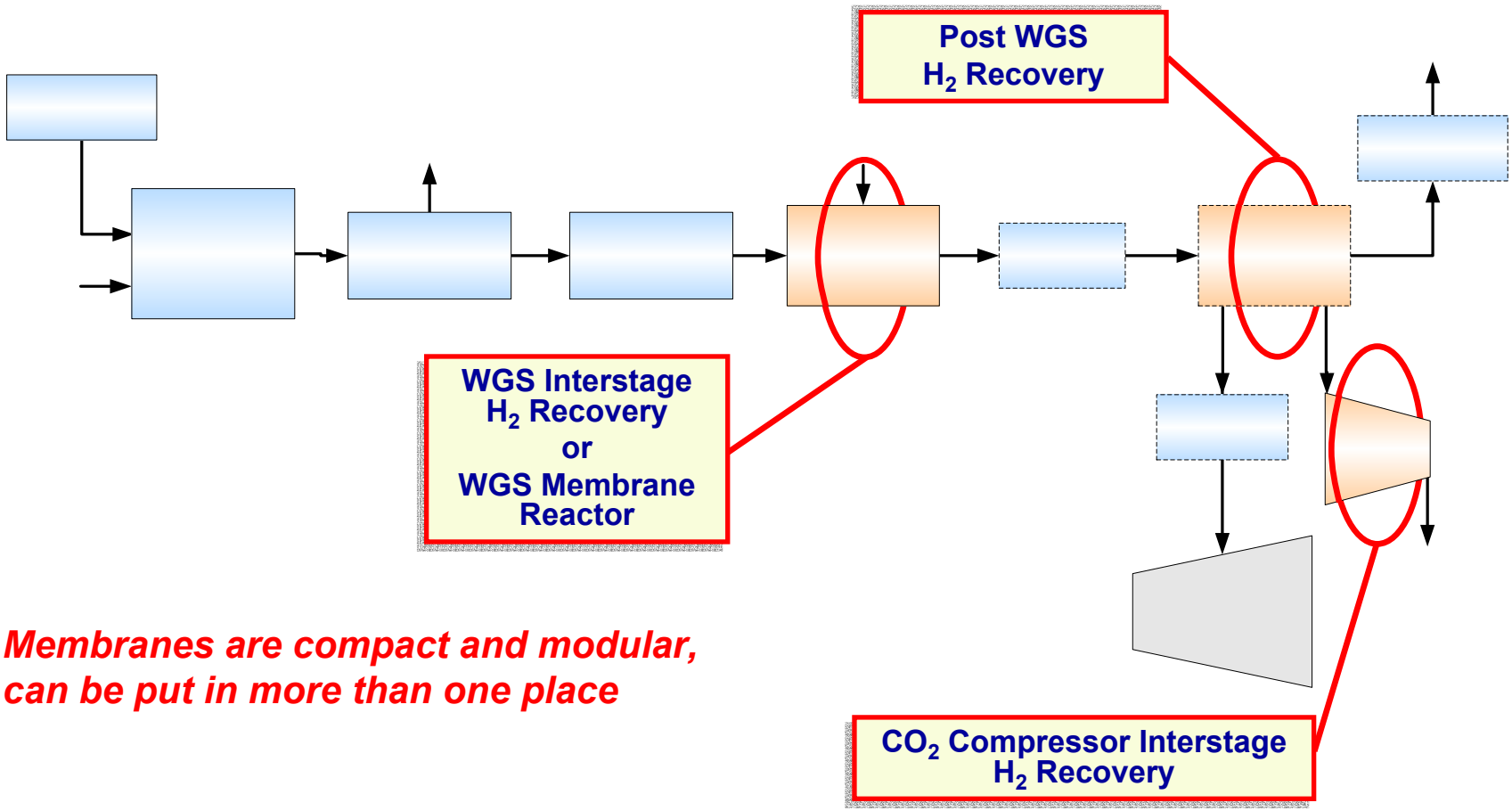

Membranes are compact and modular, can be put in more than one place

Cryogenic
ASU

Preferred Operating Conditions for H_2/CO_2 Separation Membranes

Location	Temperature Range, °C	
	low	high
WGS Interstage – HTS/HTS	300 - 350	400 - 500
HTS/LTS	200 - 260	
post LTS	~40	240 - 320
Post Cold-Gas Clean-Up	30	50
Post Warm-Gas Clean-up	200	450
CO_2 Compressor Interstage	~40	120 - 175
H_2 Post Membrane	200	450

Preferred Operating Conditions for H_2/CO_2 Separation Membranes

Location	Pressure Range, psia	
	low	high
WGS Interstage – HTS/HTS	300 - 700	<1,000
HTS/LTS		
post LTS		
Post Cold-Gas Clean-Up		
Post Warm-Gas Clean-up		
CO_2 Compressor Interstage	50 - 800	<2,200
H_2 Post Membrane	350 - 450	>450

Performance Targets for H_2/CO_2 Separation Membranes

	Recovery	Purity
Hydrogen	>95% **acceptable**	>44% **required**[a]
	>98% **preferred**	
Carbon Dioxide	>90% **required**	>90% **acceptable**
		>95% **preferred**

[a]44% corresponds to a LHV of 120 Btu/scf for fuel gas, GT feed gas has LHV ranging from 120 - 220; H_2 for sale will have purity based on end use application, pipeline 99+% H_2, petroleum refinery applications 90-99% H_2

Technical Approach

- **Key performance factors for membrane application**
  - Membrane Permeance & Selectivity
  - Operating Temperature & Pressure
  - Membrane Pressure Differential
  - Syngas Feed Composition
  - Feed Pretreatment Requirements
  - Membrane Reliability & Life
  - Turndown
- **Given the range of P, T & composition in IGCC, unlikely that any single membrane material will be best for all possible module locations**

Technical Approach
Steps

Design strategy is evolutionary

- Alternative flowsheets considered
- Take advantages of unique characteristics of individual membrane technologies
- Mitigate membrane shortcomings

1. **Simple theoretical H_2 recovery model used to screen possible module configurations and operating conditions**
2. **Candidate designs are simulated using rigorous membrane unit model to predict membrane performance (recovery & selectivity) and area requirements**
3. **Aspen-based process system model used for simulating IGCC with carbon capture to predict system performance**
4. **Aspen results used in cost model to determine system economics**
5. **Establish performance targets required to achieve successful technology commercialization**

Substitution of H_2 Membrane for 2nd-Stage of AGR

Design Options

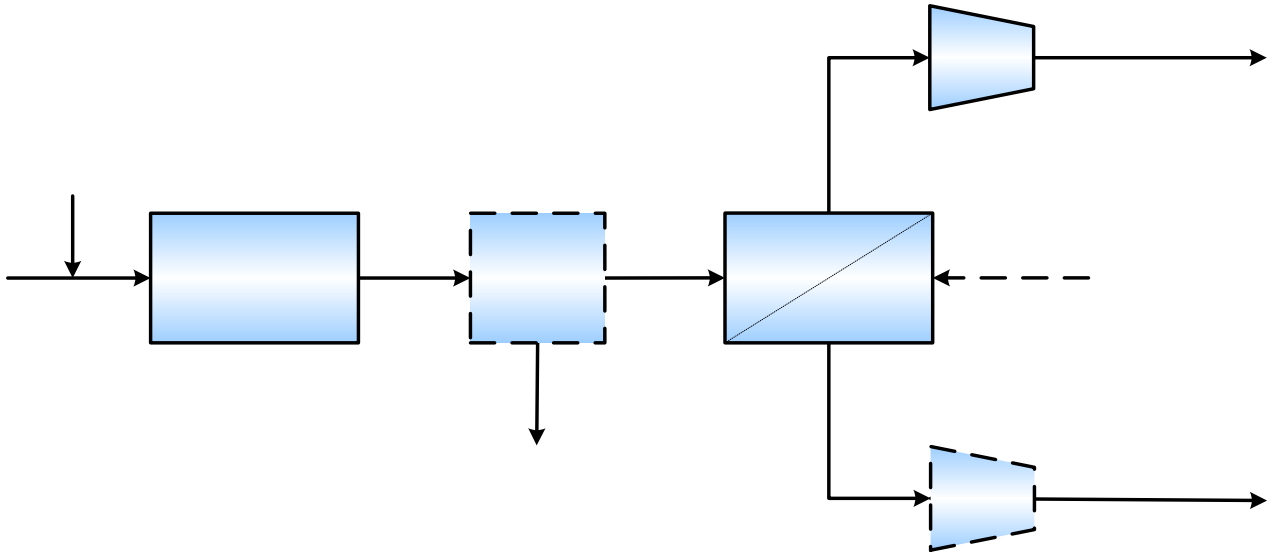

Substitution of H_2 Membrane for 2nd-Stage of AGR

Screening Results

	Feed Pressure psia	Permeate Pressure psia	Retentate (CO_2-rich) mol% H_2	Permeate (H_2-rich) mol% H_2	Hydrogen Recovery %
1a. Baseline	400	380	57	100	0
1b. 1a + low permeate P	400	50	14	100	88
1c. 1a + high feed P	700	380	55	100	9
1d. 1c + low permeate P	700	50	8	100	94
1e. 1c + N_2 sweep	700	380	25	44	76
1f. 1d + N_2 sweep	**700**	**50**	**4**	**44**	**97**

…but 1e has advantage of desired permeate pressure

Substitution of H_2 Membrane for 2nd-Stage of AGR

Advantages

- **Eliminate 2nd-stage of AGR** (1st-stage if H_2S co-sequestered)
- MDEA can be used for AGR
- **CO_2 is delivered to compression at much higher P**
- Sweep gas improves driving force and serves as GT feed diluent
- Fuel gas humidification is eliminated
- May be possible to eliminate drying of CO_2

Disadvantages

- **H_2 is produced at low pressure and requires re-compression**
- H_2 recovery is high but CO_2 stream still contains significant amount of H_2 (fuel loss)
- N_2 must be compressed to GT feed pressure
- If cold-gas AGR is used may be necessary to re-heat syngas

Substitution of H_2 Membrane for 2nd-Stage of AGR

Challenges for Membrane

- **High H_2 and CO_2 recoveries require highly selective membrane**
- **Operation with cold-gas AGR requires membrane operating temperature of approx. 40°C**
- **Operation with no AGR or with warm-gas AGR requires membrane operating temperature between 200-400°C**
- **With no AGR H_2/H_2S selectivity must be high**
  - Membrane must be sulfur tolerant
- **At elevated temperatures feed gas is saturated and driving force for H_2 transport across membrane is lower**
  - This is compensated for if membrane has low H_2/H_2O selectivity (H_2O serves as GT feed diluent)

CO_2 Compressor Interstage Membrane with PSA

Design Options

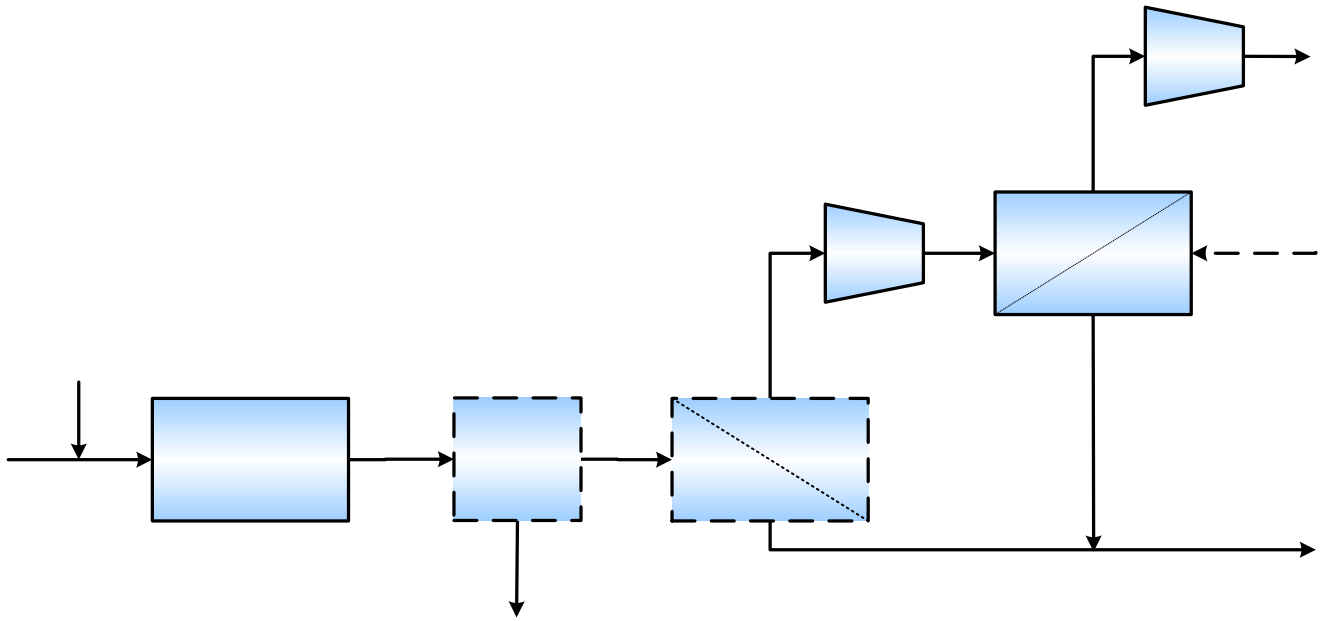

CO_2 Compressor Interstage Membrane with PSA

Screening Results

	Tail Gas Pressure psia	Retentate Pressure psia	Retentate (CO_2-rich) mol% H_2	Permeate (H_2-rich) mol% H_2	Hydrogen Recovery %
2g. Baseline **(70% from PSA)**	50	800-2,200	29-18	100	70-84
2j. 2g + N_2 sweep	50	800-2,200	8-3	44	93-97
2m. 2j with (80% from PSA)	**17**	**800-2,200**	**6-2**	**44**	**95-98**
2p. 2j with **(50% from PSA)**	100	800-2,200	13-5	44	89-96

Syngas Feed Pressure = 400 psia, H_2 Delivery Pressure = 380 psia for all cases

…but 2p has advantage of higher compression feed pressure

CO_2 Compressor Interstage Membrane with PSA

Advantages

- **Eliminate 2nd-stage of AGR** (1st-stage if H_2S co-sequestered)
- MDEA can be used for AGR
- **CO_2 can be delivered to compression at higher P**
- PSA does bulk H_2 recovery
- **No H_2 re-compression**
- H_2 membrane operates at very high P with large ΔP
- Sweep gas improves driving force and serves as GT feed diluent (may also provide compressor inter-cooling)
- May be possible to eliminate drying of CO_2
- Multiple membrane stages between compression steps possible
- Low T of PSA allows conventional gas clean-up to be used
- **High-purity H_2 from PSA can be used for other applications**

CO_2 Compressor Interstage Membrane with PSA

Disadvantages

- H_2 recovery is high but CO_2 stream still contains significant amount of H_2 (fuel loss)
- N_2 must be compressed to GT feed pressure
- Desorption of H_2S from PSA potential problem with no AGR
- **Cost of hybrid system higher**

CO_2 Compressor Interstage Membrane with PSA

Challenges for Membrane

- **High H_2 and CO_2 recoveries require highly selective membrane**
  - If high-purity H_2 not required or membrane selectivity very high may be possible to substitute membrane module for PSA
- **Operating temperature of inter-stage membrane between 40-175^oC**
- **With no AGR membrane must be sulfur tolerant**
- **Operating conditions required are not optimal for PSA**
  - High tail (CO_2-rich) gas pressure
  - Lower H_2 recovery

NETL Membrane System Studies

Conclusions

- **Membranes are modular and may be attractively integrated into number of locations in IGCC process**
  - More than one type of membrane material will likely be needed
  - Low-temperature operation is still desirable & may be more achievable in short term
  - Integrating membranes into CO_2 compression train has many benefits
  - PSA/membrane hybrid separation systems also have some major advantages
- **H_2 and recycle gas re-compression are undesirable for IGCC membrane applications**
- **High selectivity is prerequisite for successful process integration**
  - Required selectivity is directly related to 90% CO_2 capture constraint
  - Still issue for many H_2/CO_2 separation membranes under development
- **Compared to commercial polymer membranes, cost and foot print will be issues with advanced membranes**
  - Membrane materials and support may be critical cost

Acknowledgements

This work is supported by the U.S. DOE National Energy Technology Laboratory

The authors express their gratitude to Los Alamos, Lawrence Livermore & Oak Ridge National Laboratories, and Pall Corporation for their input, feedback and encouragement

NETL Membrane System Studies
Status

- Reviewing and revising Aspen simulations and economic analyses for post-WGS membrane integration
- Have begun simulations for CO_2 compressor inter-stage membrane integration
- Beginning screening analysis of WGS inter-stage membrane integration

Possible Location of Membrane Module in IGCC Plant

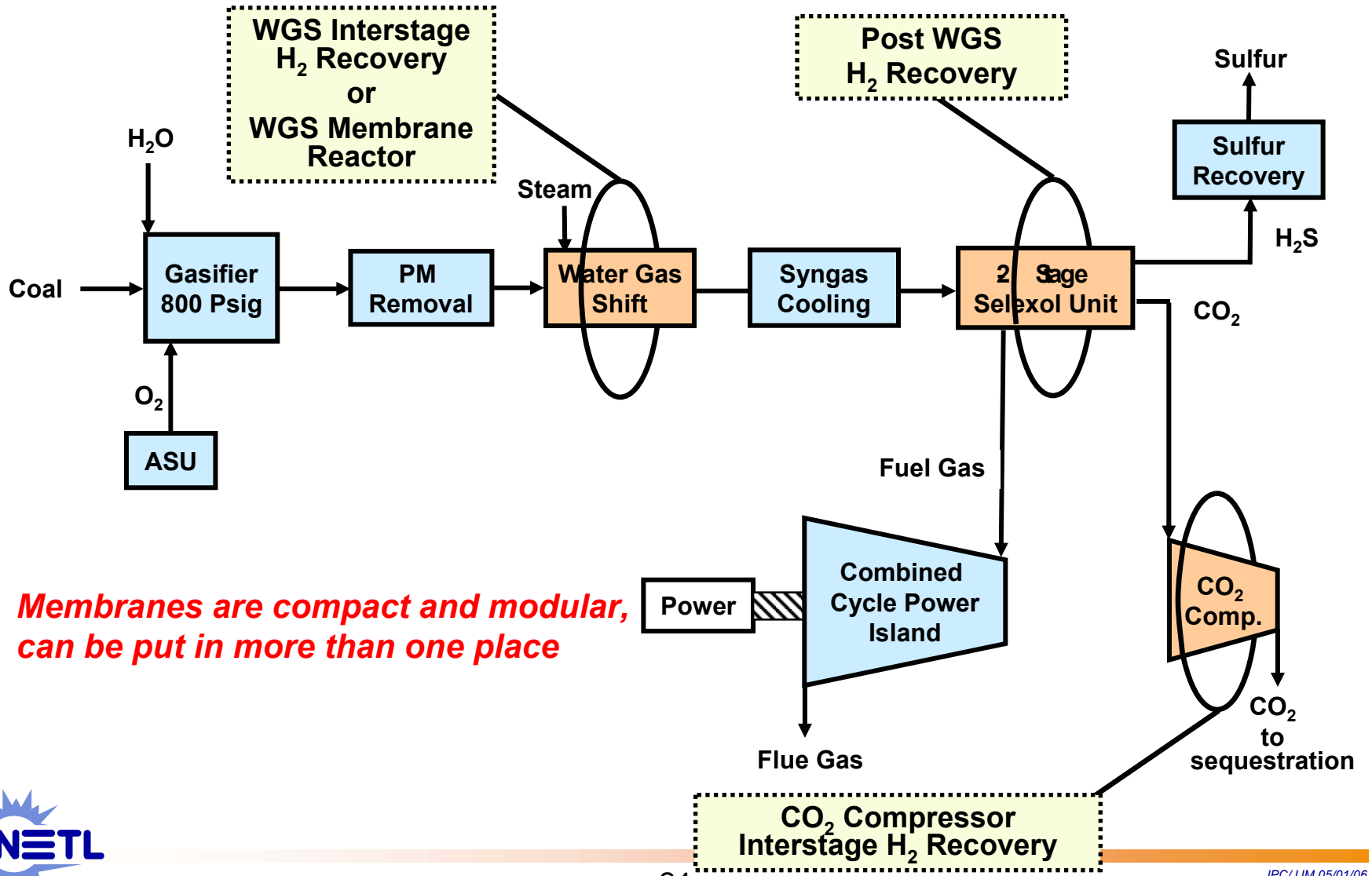

Membranes are compact and modular, can be put in more than one place

Water-Gas Shift Reactor / H_2 Membrane Integration

Advantages

- H_2 Removal drives WGS Reaction to completion
- Possibly reduced number of WGS Reactors
- Possibly eliminate or reduce Steam requirement
- H_2 produced at Turbine Inlet P
- N_2 Sweep improves driving force and serves as GT Diluent (may also provide reactor intercooling)
- Multiple Membrane Stages possible if necessary
- May integrate with CO_2 Compression if necessary

Challenges

- What T to operate WGS Reactors
- High Membrane Selectivity for H_2 vs. CO, CO_2 & H_2S
- Membrane operates at elevated Temperatures
- May require Warm Gas Clean-up
- Additional requirements placed on ASU
  - N_2 Purity
  - N_2 Delivery P

Technical Approach
Design Options
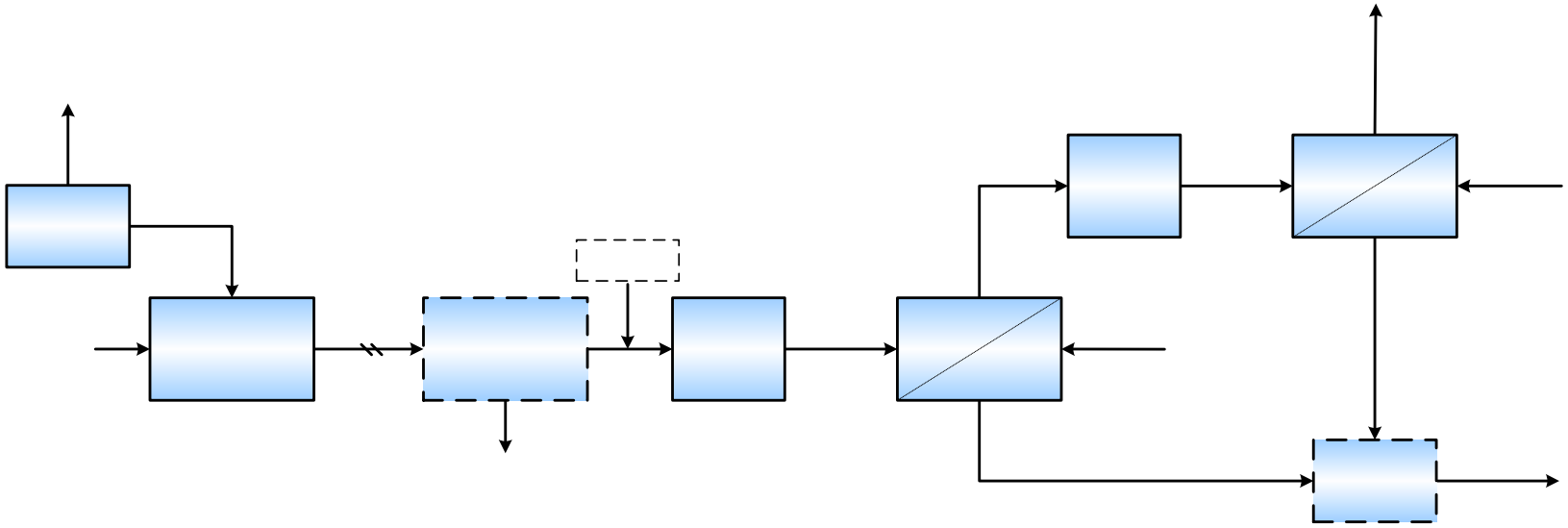
Water-Gas Shift Reactor / H_2 Membrane Integration