Fifth Annual Conference on Carbon Capture & Sequestration

Steps Toward Deployment

CCS Economic Analyses

Advanced Pulverized Coal Oxyfuel Combustion

Presenting Author:

Jared P. Ciferno - NETL

National Energy Technology Laboratory

May 8-11, 2006 • Hilton Alexandria Mark Center • Alexandria, Virginia

This presentation was prepared as an account of work sponsored by an agency of the United States Government. Neither the United States Government nor any agency thereof, nor any of their employees, makes any warranty, express or implied, or assumes any legal liability or responsibility for the accuracy, completeness, or usefulness of any information, apparatus, product, or process disclosed, or represents that its use would not infringe privately owned rights. Reference therein to any specific commercial product, process, or service by trade name, trademark, manufacturer, or otherwise does not necessarily constitute or imply its endorsement, recommendation, or favoring by the United States Government or any agency thereof. The views and opinions of authors expressed therein do not necessarily state or reflect those of the United States Government or any agency thereof.

Team

- **NETL**
  - Jared P. Ciferno
  - Arun C. Bose
- **RDS (Parsons & WorleyParsons)**
  - Ronald L. Schoff
  - Pamela J. Capicotto
  - Vladimir Vaysman
- **Air Liquide**
  - Fabienne Châtel-Pélage
  - Rajani K. Varagani
  - Florian Gautier
  - Pavol Pranda
- **Babcock & Wilcox**
  - Denny McDonald
  - Doug Devault
  - Hamid Farzan

All Phases of Effort

Cryogenic ASU/PC Boiler

Goals and Objectives

Exploring feasibility of a non-gasification based system in a carbon constrained world

1. **Perform detailed study on OxyFuel Combustion to validate preliminary results and flush out system barriers that prevent technology success or areas that require further R&D to reach commercialization**
2. **Assess the technical and economic feasibility of co-sequestration with CO_2, SOx and NOx**
3. **Assess the integration of developmental processes such as novel O_2 membrane technologies (Air Products ITM Membrane) to push technology forward**

Oxy-combustion in Pulverized Coal Boilers for CO_2 Capture

- **Principle**: O_2 is provided by ASU, N_2 is replaced by re-circulated CO_2

$$\text{Coal} + O_2 \longrightarrow CO_2 + H_2O$$

  - O_2 is diluted with recycled flue gas **for temperature control**
  - **No Nitrogen dilution of the flue gas:** CO_2 rich flue gas enables easier CO_2 capture
  - Eliminates SCR NOx control in Boiler
  - Utilizes existing technologies

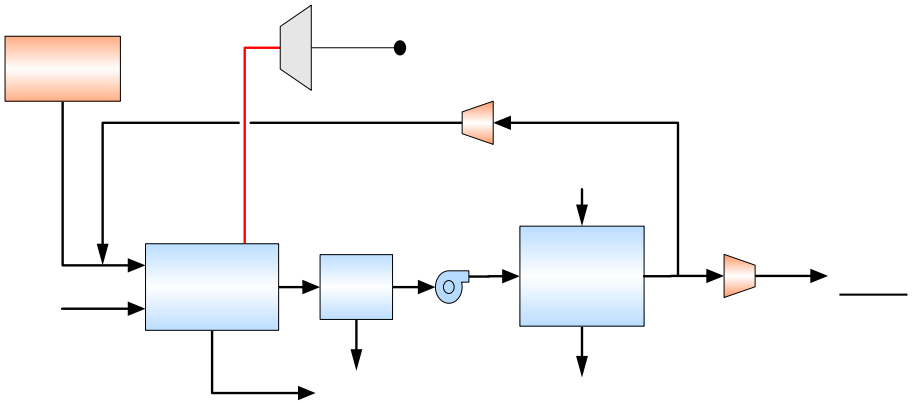

Pulverized Coal Oxy-fuel Advantages

2004 Air Liquide/B&W Experimental Results:

1. **Flue Gas CO_2 Content: From 13% (air fired) to 70+% in oxy-combustion**

2. **NOx Emission: Reduced by 60 to 70% in Boiler**
   ⇨ Combustion controls meet environmental requirements

3. **Firing temperature similar to air-fired design: FG recycle to O_2 concentration similar to air**

4. **Potential for new compact boiler design: Reduction in FG recycle equipment**

Reference:
1. Advanced Low/Zero Emission Boiler Design Operation, Techno-Economic Study, Air Liquide, Countryside, IL, Department of Energy-NETL, Pittsburgh, PA, November 2004

Technical Approach

NEW for the 2005—2006 NETL Study:

1. **Co-Sequestration CO_2/SO_2/NOx:**
   - ⇨ Significant capital cost savings (No SCR, No FGD, ↓ Purification)
   - ⇨ No technical barriers with "Dirty CO_2" capture, transport and storage (2004 IEA GHG)
   - ⇨ "…serious but not insurmountable safety concerns in transporting and storing CO_2/SO_2/NOx." (2004 IEA GHG)
   - ⇨ "…anticipate regulatory bodies may treat CO_2/SO_2 streams similar to CO_2/H_2S streams, for which there are well established approval procedures in North America." (2004 IEA GHG)
   - ⇨ In North America, many point sources lie *within 100 miles* of potential storage opportunities, implying that extensive long distance pipelines for CO_2 transport may not be needed (2005 IEA GHG)

References:

1. *Impact of Impurities on CO_2 Capture, Transport and Storage*, IEA Greenhouse Gas R&D Programme, Report Number PH 4/32, August 2004
2. *Building the Cost Curves for CO_2 Storage in North America,* IEA Greenhouse Gas R&D Programme, Report Number PH 2005/3, February 2005

Technical Approach

NEW for the 2005—2006 NETL Study:

2. **Optimized Oxyfuel Cycles: Super- and Ultrasupercritical**
   - ⇨ Study #1: 40.6% net plant efficiency with 95+ CO_2 recovery and compression [1]
   - ⇨ Study #2: Multiple opportunities for heat recovery from ASU and CO_2 compressors [2]
3. **Assess performance and costs for variable O_2 feed and CO_2 product purity**
4. **O_2 Membranes:**
   - ⇨ Potential for large capital cost savings compared to cryogenic systems (20-30%)

References:

1. Hellfritsch, S. , Gilli, P., Jentsch, N., *Concept for a Lignite-fired Power Plant Based on the Optimised Oxyfuel Process with CO_2 Recovery*, VGR Power Tech, 8/2004
2. Dillon, D., Panesar, R., Wall, R., Oxy-combustion Processes for CO2 Capture from Advanced Supercritical and NGCC Power Plant, Mitsui Babcock, Alstom Power, Air Products, IEA GHG,

Technical Approach

1. Engineering Studies and Extensive Process Simulation (ASPEN)

- All major chemical processes and equipment are vendor specified: AL/B&W
- Detailed mass and energy balances
- Performance calculations (auxiliary power, gross/net power output)
- Source for Overall Performance Estimation: RDS (Parsons)

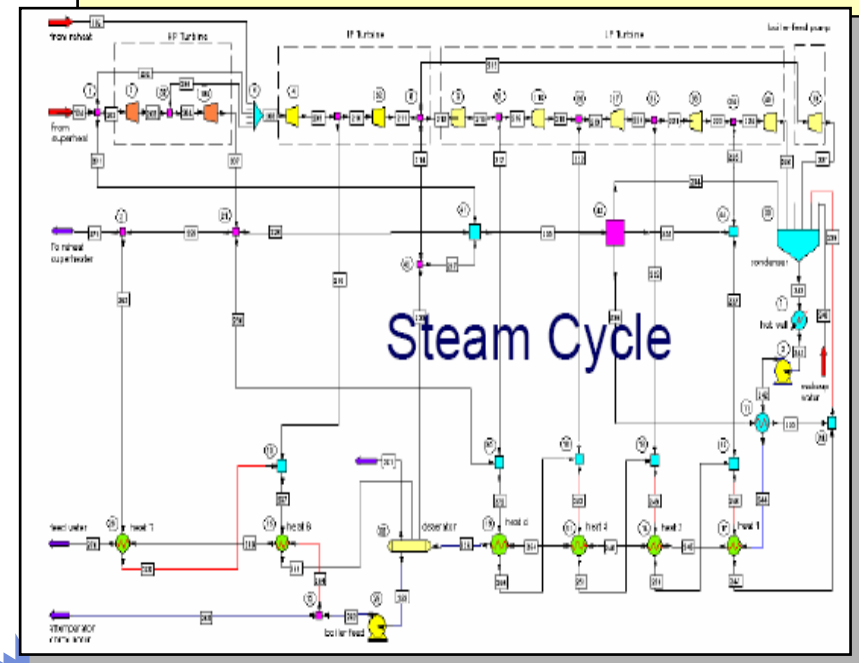

2. Cost Estimation

- **Inputs from process simulation** (Flow Rates/Gas Composition/Pressure Temp.)
- **Sources for cost estimation**
  - ASU & CO_2 Trains: Air Liquide
  - Boiler & FGD: B&W
  - BOP: RDS (Parsons)
- **Follow DOE Analysis Guidelines**

Design Basis: Coal Type

Illinois #6 Coal Ultimate Analysis (weight %)

	As Rec'd	Dry
Moisture	11.12	0
Carbon	63.75	71.72
Hydrogen	4.50	5.06
Nitrogen	1.25	1.41
Chlorine	0.29	0.33
Sulfur	2.51	2.82
Ash	9.70	10.91
Oxygen (by difference)	6.88	7.75
Total	100.0	100.0
HHV (Btu/lb)	11,666	13,126

Design Basis: Assumptions

Economic

Startup	2015-2020
Plant Life (Years)	20
Capital Charge Factor (%)	13.8
Dollars (Constant)	2006
Coal ($/MM Btu)	1.34
Capacity Factor	85

Site

Greenfield, Midwestern USA, 0 ft Elevation

Rail and Highway Access

Municipal Water

Air-Fired Pulverized Coal Combustion

Baseline No-Capture Cases

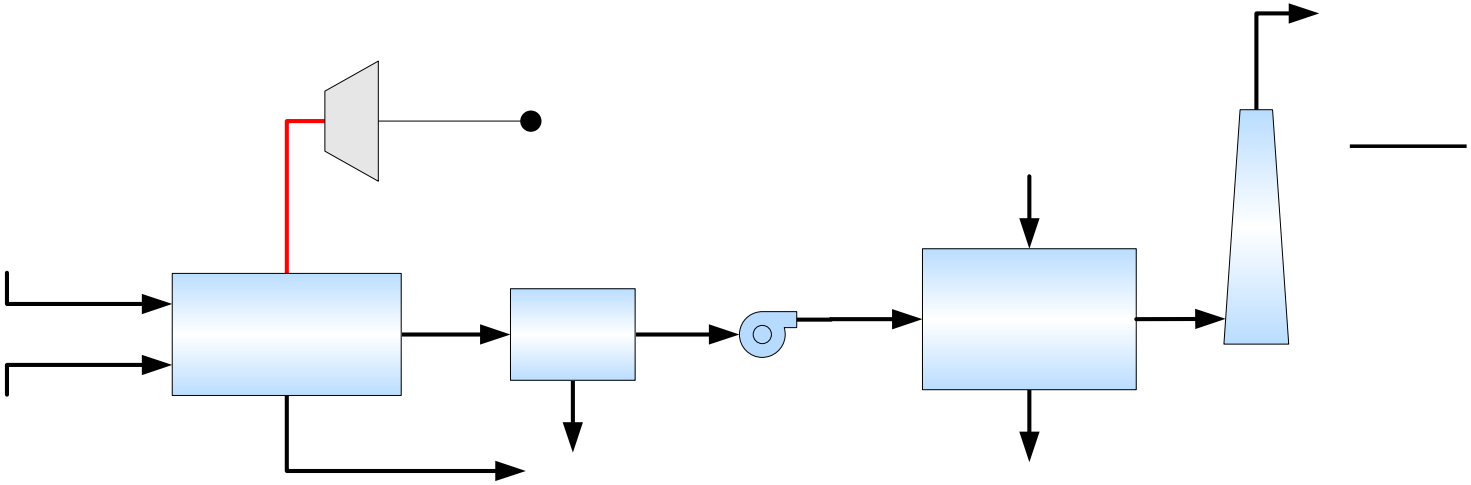

PM Control: Bag House to get 0.015 lb/MMBtu (99.8% removal)

SOx Control: FGD to get 0.086 lb/MMBtu (98% removal)

NOx Control: LNB + OFA + SCR to maintain 0.7 lb/MMBtu

Mercury Control: Activated Carbon beds for ~90% removal

Steam Conditions (SC) - 3500psig/1100°F/1150°F

Steam Conditions (USC) - 4000psig/1350°F/1400°F

Cryogenic ASU Oxyfuel Combustion

CO_2 Capture

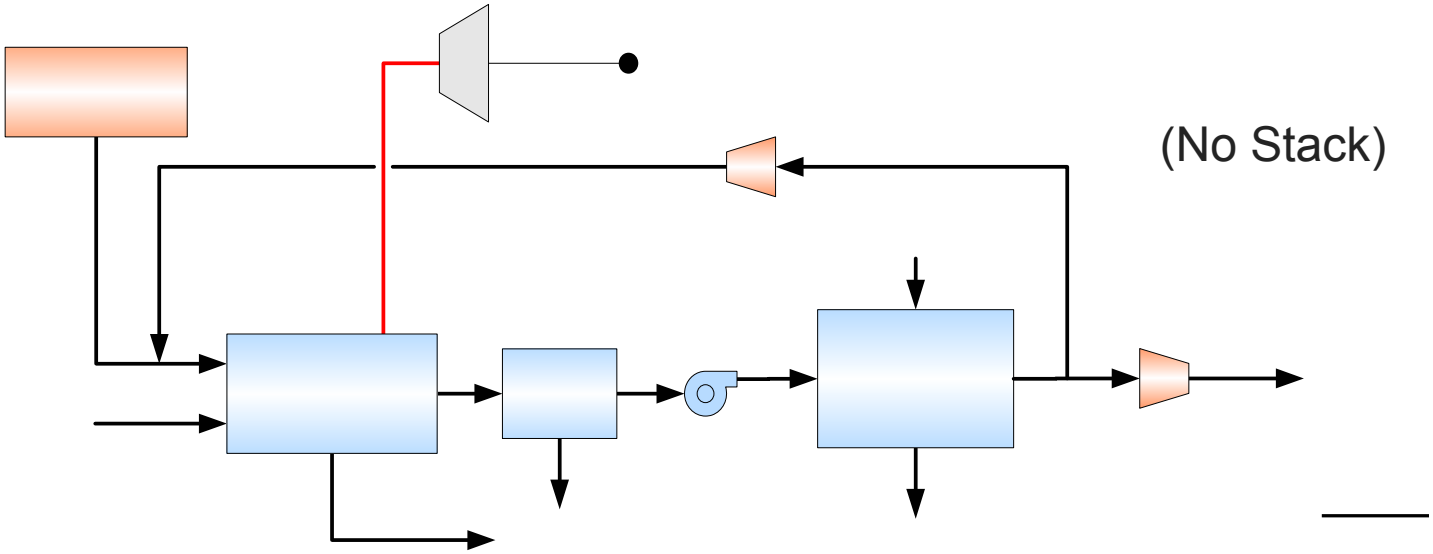

Challenges:

1. **Requires 3 additional units**
2. **80% flue gas recycle to equal combustion air composition**
3. **CO_2 Produced at ambient conditions → large compression load**
4. **High sulfur coal requires FGD unit**

Cryogenic ASU

Cases 1 & 2: Supercritical Performance Results

	Case 1 No Capture	Case 2 Capture
Coal Flow Rate (Ton/day)	4,889	6,751
CO_2 Captured (Ton/day)	-	17,530
Total Gross Power (MW)	587	794
Auxiliary Power (MW)		
Base Plant Load	30	33
Air Separation Unit	-	129
CO_2 Compression	-	73
Gas Cleanup	7	9
Total Auxiliary Load (MW)	37	244
Net Power (MW)	550	550
Net Heat Rate (Btu/kWh)	8,650	11,940
Efficiency (% HHV)	39.5	28.6
Energy Penalty (%)[1]	-	28%

Requires larger base plant to maintain 550 MWnet output

14,450 TPD of 95% O_2

17,530 TPD CO_2 Compressed from 15 to 2,200 Psia

[1] CO_2 Capture Energy Penalty = Percent decrease in net power plant efficiency due to CO_2 Capture

Cases 1 & 2: Supercritical Economic Results

	Case 1 No Capture	Case 2 Capture	Difference
Plant Cost ($/kWe)[1]			
Base Plant	1,205	1,681	476
Air Separation Unit	-	448	448
Gas Cleanup	195	275	80
CO_2 Compression	-	116	116
Total Plant Cost ($/kWe)	1,400	2,520	1,120
Capital COE (¢/kWh)	2.88	5.17	2.29
Variable COE (¢/kWh)	2.15	2.68	0.53
Total COE (¢/kWh)[2]	5.03	7.85	2.82
Increase in COE (%)	-	56	
$/tonne CO_2 Avoided	-	35	

Larger base plant to make up for ASU and compression auxiliary loads

Larger FGD Unit

[1]Total Plant Capital Cost (Includes contingencies and engineering fees)

[2]January 2006 Dollars, 85% Capacity Factor, 13.8% Levelization Factor, Coal cost $1.34/10^{6}Btu

Cases 3 & 4: Ultrasupercritical Performance

	Case 3 No Capture	Case 4 Capture
Coal Flow Rate (Ton/day)	4,323	5,784
CO_2 Captured (Ton/day)	-	15,040
Total Gross Power (MW)	586	767
Auxiliary Power (MW)		
Base Plant Load	27	30
Air Separation Unit	-	117
CO_2 Compression	-	62
Gas Cleanup	7	8
Total Auxiliary Load (MW)	34	217
Net Power (MW)	552	550
Net Heat Rate (Btu/kWh)	7,610	10,230
Efficiency (% HHV)	44.8	33.4
Energy Penalty (%)[1]	-	25%

Requires larger base plant to maintain 550 MWnet output

15,040 TPD CO_2 Compressed from 15 to 2,200 Psia

Advanced Steam Cycle

[1] CO_2 Capture Energy Penalty = Percent decrease in net power plant efficiency due to CO_2 Capture

Cases 3 & 4: Ultrasupercritical Economic Results

	Case 3 No Capture	Case 4 Capture	Difference
Plant Cost ($/kWe)[1]			
Base Plant	1,215	1,639	424
Air Separation Unit	-	464	464
Gas Cleanup	175	258	83
CO_2 Compression	-	99	99
Total Plant Cost ($/kWe)	1,390	2,460	1,070
Capital COE (¢/kWh)	2.87	5.05	2.18
Variable COE (¢/kWh)	1.99	2.42	0.43
Total COE (¢/kWh)[2]	4.86	7.47	2.61
Increase in COE (%)	-	54	
$/tonne CO_2 Avoided	-	37	

[1]Total Plant Capital Cost (Includes contingencies and engineering fees)

[2]January 2006 Dollars, 85% Capacity Factor, 13.8% Levelization Factor, Coal cost $1.34/$10^6$Btu

Auxiliary Load Summary

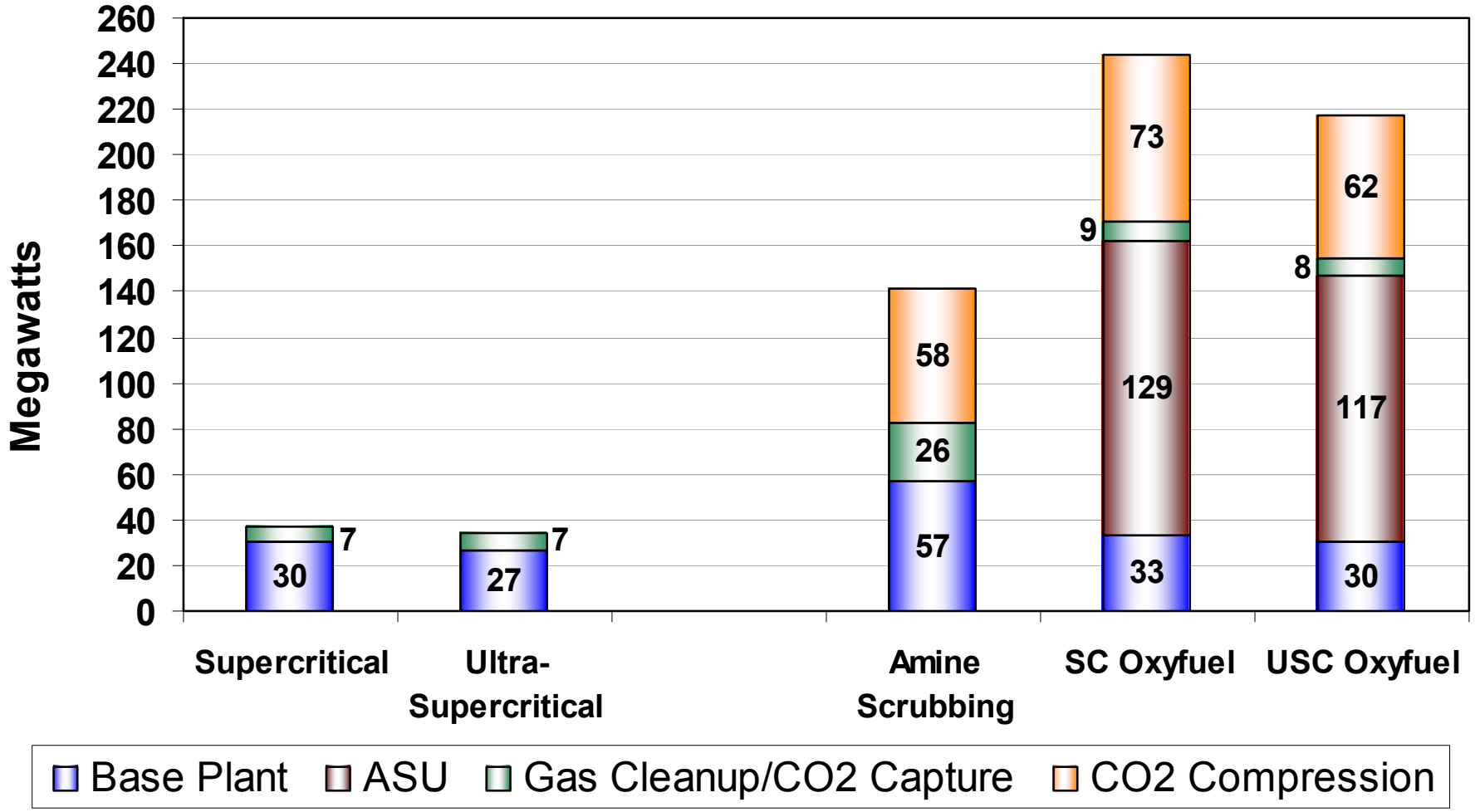

Thermal Efficiency Summary

CO_2 Capture decreases net efficiency by 13 percentage points

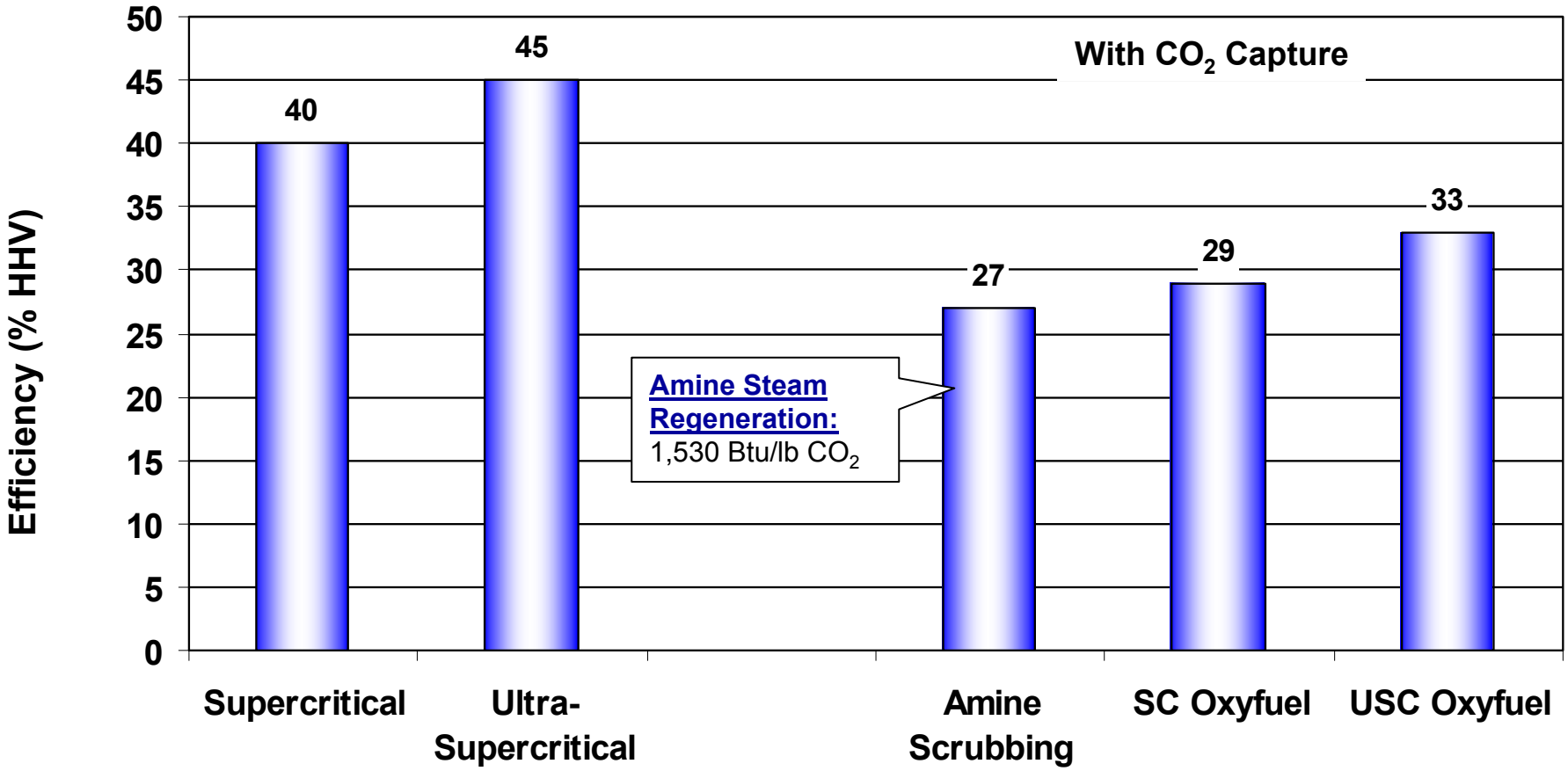

Total Plant Capital Cost Summary

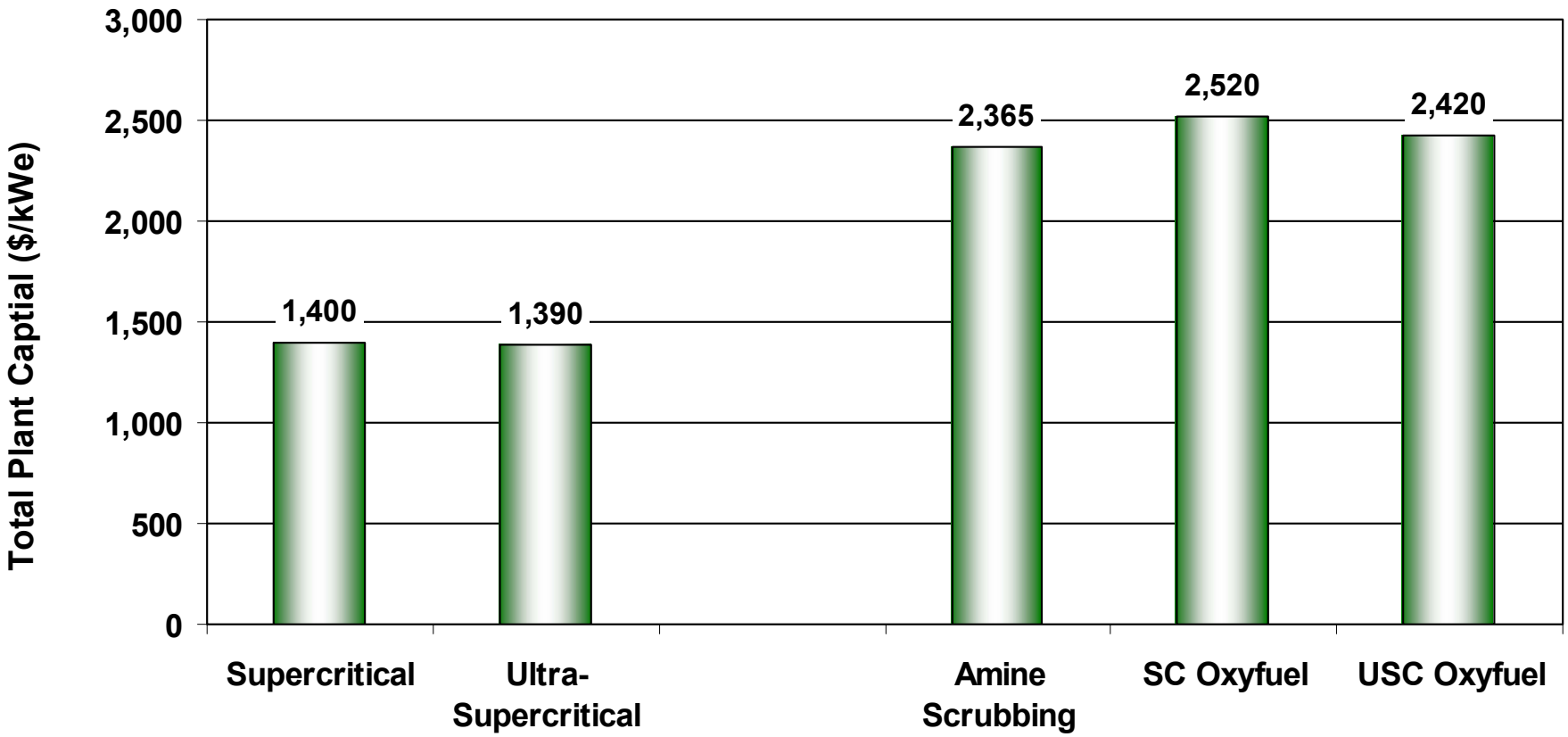

CO_2 Capture increases Total Plant Cost by 70-80%

CO_2 Capture Mitigation Costs

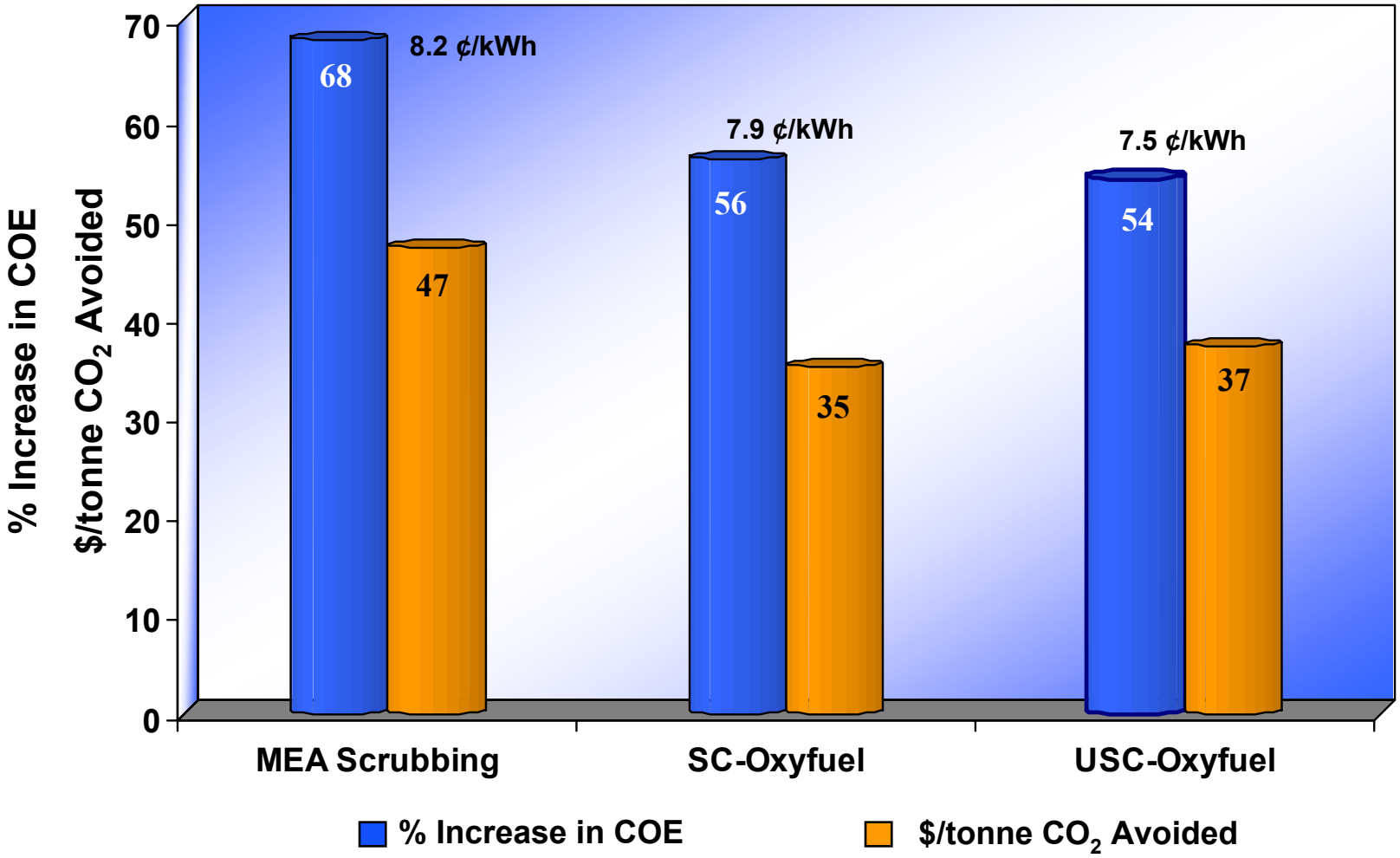

MEA Scrubbing: Air Fired SC Boiler, Econamine FG+ CO_2 Capture

Sensitivity Analyses: Cost Reduction Options

- **Flue Gas Desulfurization Elimination**
  - If coal has less than 1% sulfur, FGD may be eliminated without significant impact on the boiler, though flue gas condensation will still be required
  - Cost reduction is estimated to be $230/kW (6.8 mills/kWh)
- **Advanced Boiler Cost Reductions**
  - Elimination of high contingency (25%→7.5%) yields $100/kW (2.0 mills/kWh) cost reduction
  - Reduction in cost of materials through Research & Development may result in 20% boiler cost improvement, resulting in further $75/kW (1.8 mills/kWh) cost reduction

Cost Reduction Opportunities

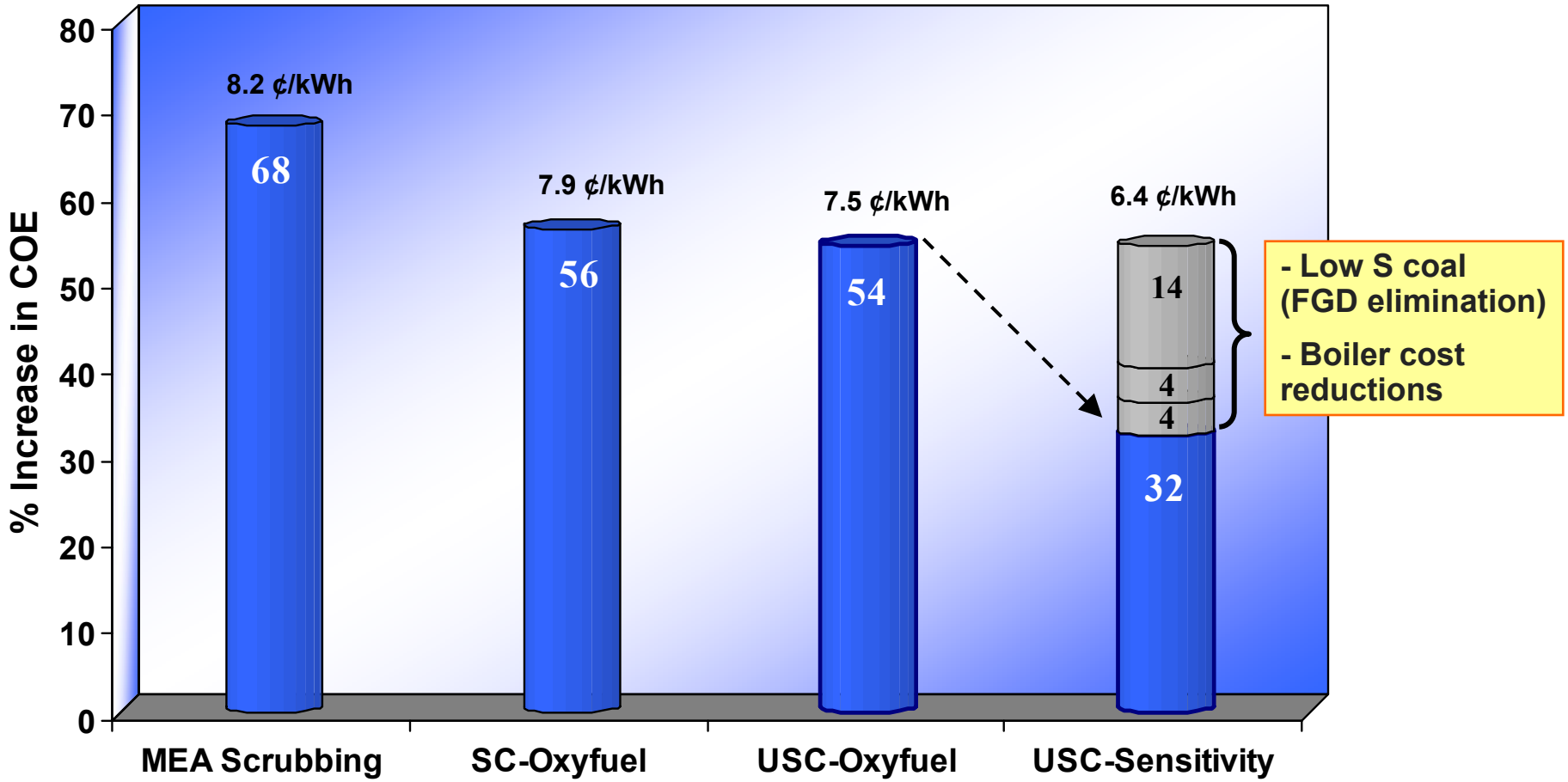

Cost Reductions may result in 22 percentage point drop in COE

Cost Reduction Opportunities

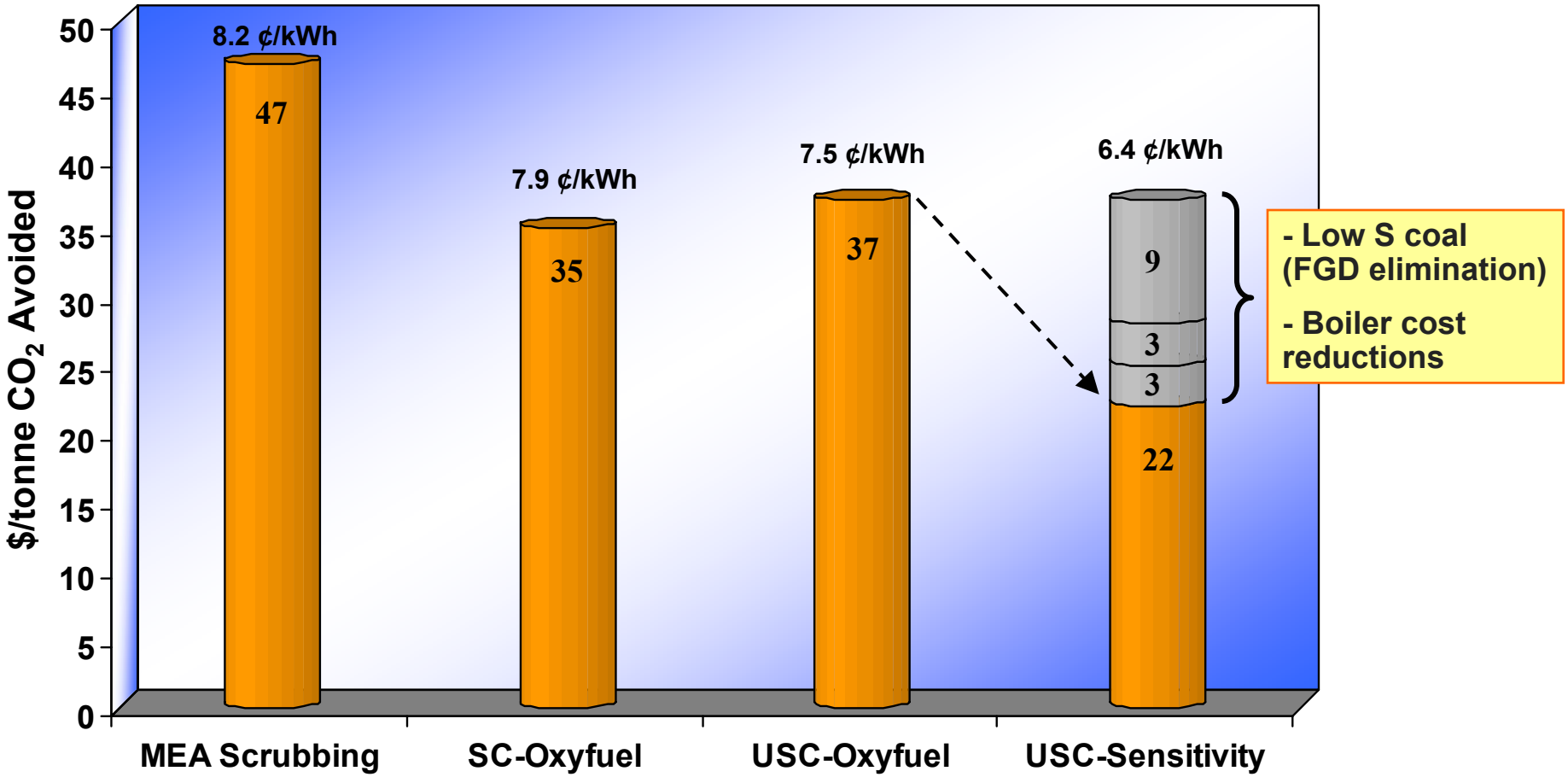

Cost Reductions may result in $15/tonne drop cost of CO_2 Avoided

Conclusions

- **High sulfur coals will require FGD for SOx removal to ensure reliable boiler operation, as such Co-sequestration is not an option**
  - Low sulfur (<1%) coals will allow removal of FGD, allowing for co-sequestration of SOx and CO_2, potentially reducing costs
- **Conservative cost estimates indicate a 25% improvement in CO_2 Avoided costs as compared to MEA scrubbing**
  - Applying cost reductions may result in a 50% improvement
- **Cost of advanced materials must be reduced to allow for advanced steam cycle usage (NETL/EPRI/Industry Consortium)**
- **Developmental technologies such as the ITM may provide a possible 23-30% reduction in cost for oxidant preparation**

Future Work

- Investigate the impact of replacing the cryogenic ASU with a developmental membrane-based system (ITM)
- Study the performance and economics of Low Sulfur Coal-fired plants
- Further study into possible cost reduction areas to reduce capital cost and COE
- Final Report Completed Summer 2006

Questions

Sensitivity Analyses: CO_2 Product Quality

- **CO_2 Spec A: 95% O_2-Fired Boiler/No CO_2 Purification**
  - Base Cases provide good cost/benefit ratio

- **CO_2 Spec B: 99% O_2-Fired Boiler/No CO_2 Purification**
  - Compared to 95% O_2-Fired Boiler w/CO_2 Purification
  - Total Plant Cost increased by $20/kW to meet Spec B

- **CO_2 Spec C: 95% O_2-Fired Boiler / CO_2 Purification for Enhanced Oil Recovery (EOR)**
  - High purity CO_2 product for sale to EOR industry
  - Adds $50/kW to Total Plant Cost while adding a byproduct credit to the Financial Analysis