Fifth Annual Conference on Carbon Capture & Sequestration

Steps Toward Deployment

Capture Technologies

Evaluating CO2 Capture Options for a Fluidized Catalytic Cracker Regenerator

George F. Schuette, Edward G. Latimer, Joseph B. Cross and Etop Esen

ConocoPhillips Company

May 8-11, 2006 • Hilton Alexandria Mark Center • Alexandria, Virginia

Outline

- Refinery CO2 Emissions
- Fluidized Catalytic Cracker (FCC) Emissions
- Flue Gas CO2 Capture Technologies
- Process Models: MEA vs. Solid Adsorbent
- Cost Breakeven Properties
- Summary

ConocoPhillips

CO2 Emissions from Oil & Gas Refining

2003 US Emissions by Sector (MM tonne)

Commercial	1,026	17 %
Residential	1,215	21 %
Industrial	1,666	28 %
Transportation	1,875	32 %
Total	5,870	98 %
US Refineries	223	4 %

Energy Information Administration
Emissions of Greenhouse Gases in the United States 2003
DOE/EIA-0573 (2003)11

CO2 Emission Factor: 40 M tonne CO2/MM bbl crude oil

ConocoPhillips

Fluidized Catalytic Cracker

Large CO2 Point Source

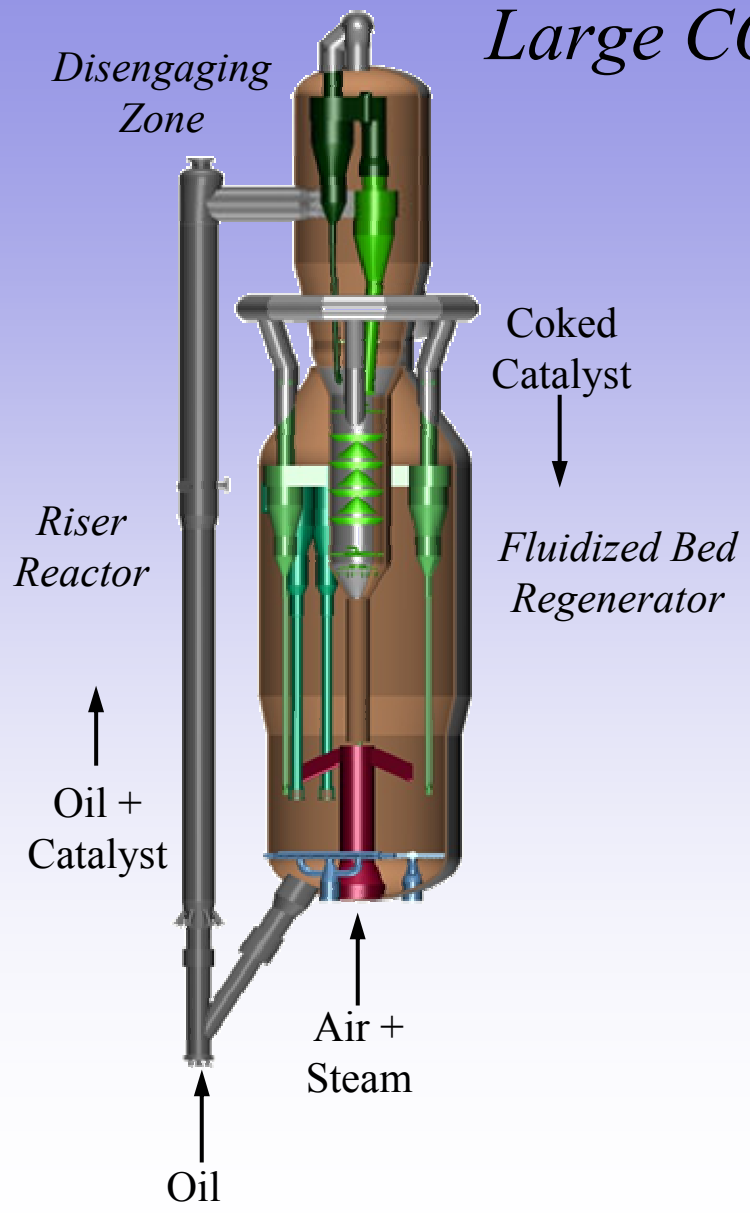

- FCC unit cracks heavy gas oil to gasoline-range products
- Fluidized bed regenerator
- Regenerator flue gas contains 15-50% of the total refinery CO2
- Example
  - 50,000-barrel/day
  - 4 Wt-% coke yield
  - 1,180 US ton/day CO2
  - 90% capture (1,060 ton CO2/day)

ConocoPhillips

Flue Gas CO2 Capture Technologies

- Absorption *State-of-the-art*
- Adsorption *Developing*
- Membranes
- Cryogenic

ConocoPhillips

Adsorption

- Polymer-Filled Mesoporous Silica Adsorbent
  - "Molecular Basket" adsorbent developed by Song & co-workers (Penn State University)
  - Polyethyleneimine (PEI) with Primary, Secondary, Tertiary Amine sites
  - Chemistry parallels that of CO2 absorption by aqueous amine
  - HMS-type Mesoporous Silica
    - Commercially available
    - Open porosity
    - Uniform large pore diameter (3.9 nm)
    - Large pore volume (2 cc/gm)
  - Active area of research; large body of published information

ConocoPhillips

Regeneration of PEI-Silica Adsorbent

Thermogravimetric Analysis

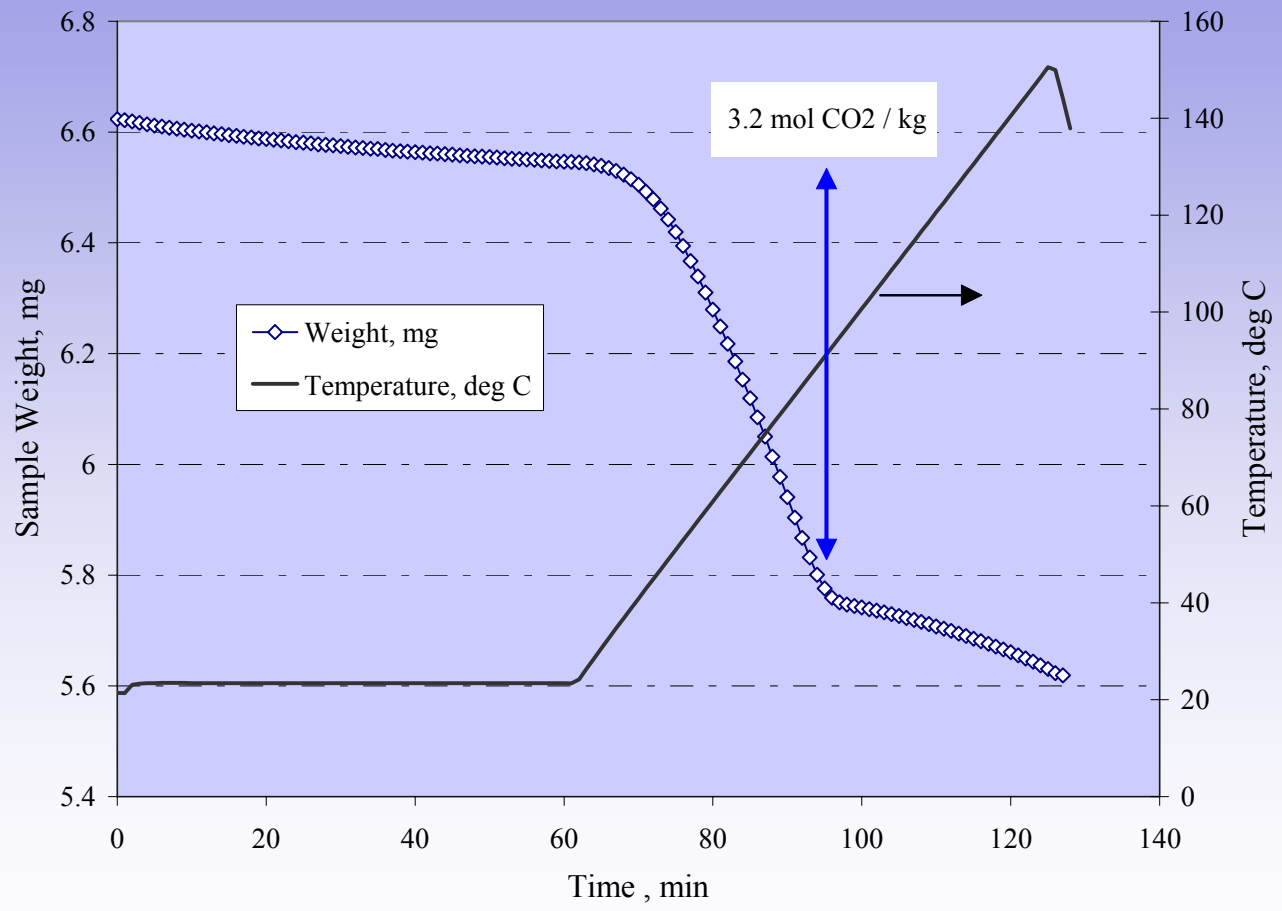

- 50 wt-% PEI on HMS-Silica
- Feed Gas: 50% CO2 (moist) in Nitrogen
- Regeneration under Nitrogen
- Weight change from 40-90 C corresponds to ~3 mol CO2/kg fresh adsorbent

ConocoPhillips

Solid Adsorbent Economics

- Competitive Process: Wet Amine (20% MEA)
- Design basis
  - 50,000 BPD FCC unit
  - 1,060 tons CO2/day
  - Build into existing refinery & infrastructure
  - No SOx/NOx pretreatment or CO2 compression
  - 4th Qtr 2004 US energy & commodity prices
  - 13% Return-on-Investment capital rate
  - **15% CO2 in flue gas**

ConocoPhillips

Objectives

I. Compare capture costs: MEA vs. Solid Adsorbent

II. Evaluate sensitivity of Solid Adsorbent cost to adsorbent properties and pressure drop

ConocoPhillips

Wet Amine Unit

20% MEA

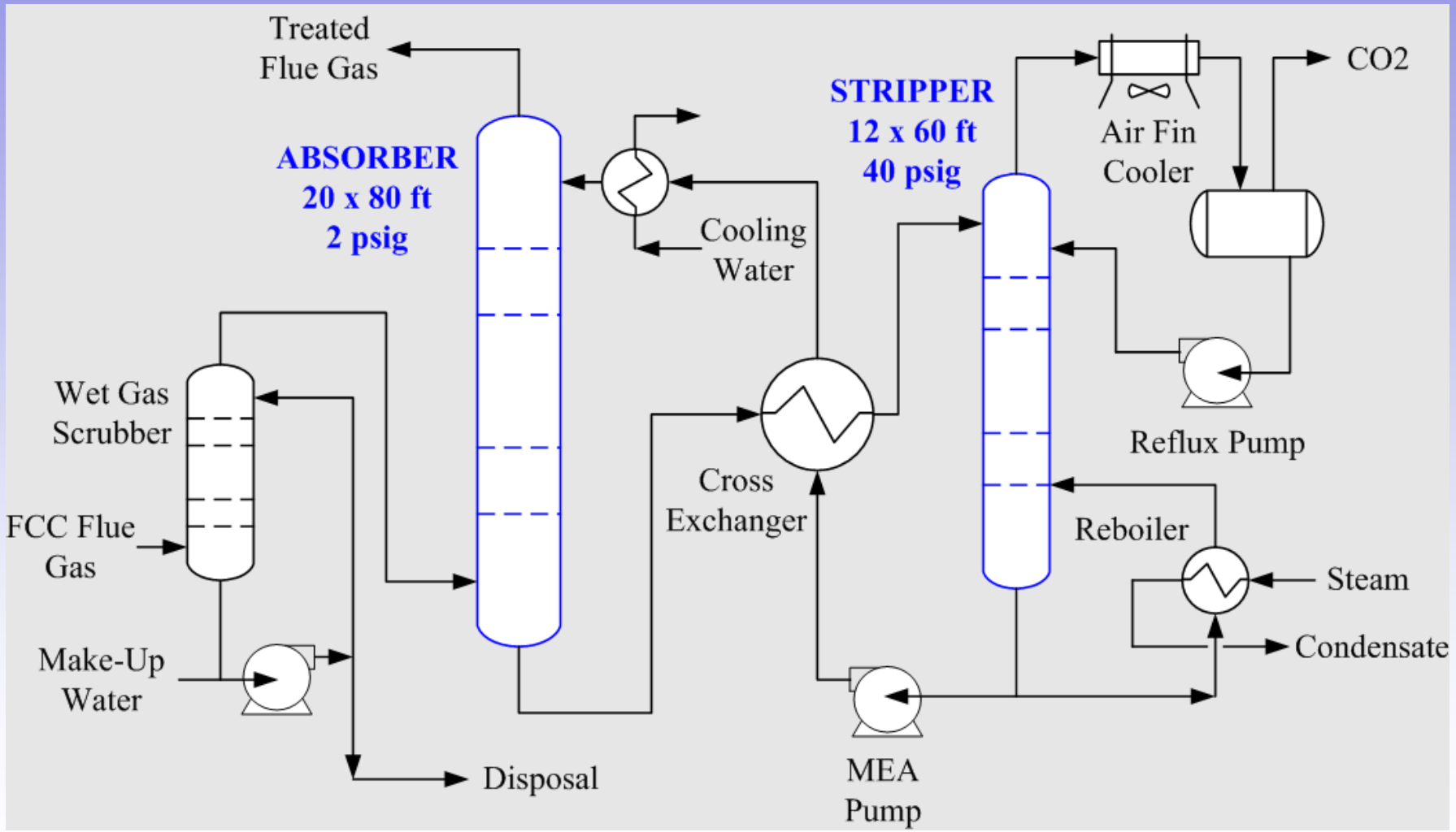

ConocoPhillips

Solid Adsorbent Unit

Temperature-Swing Operation

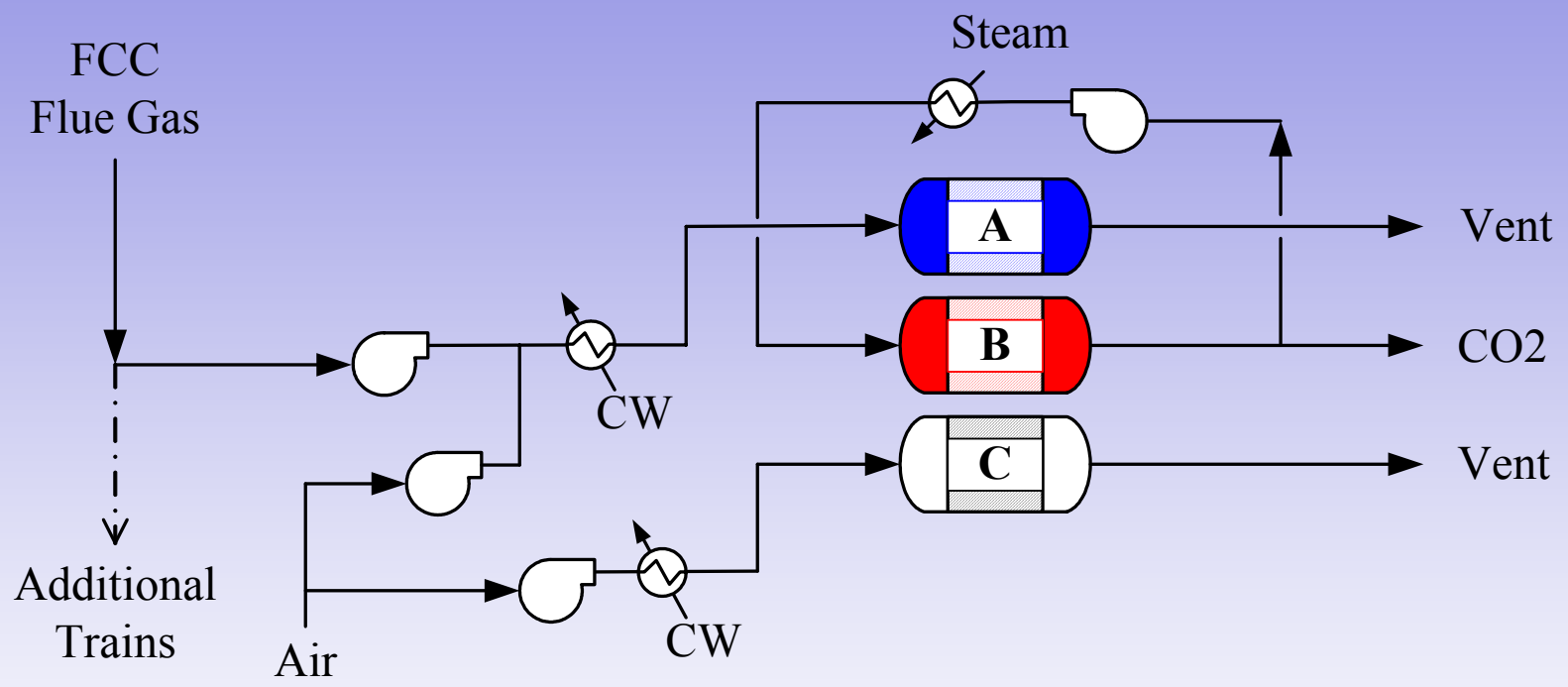

- One of Multiple Trains
- Base Case: 15 beds, 33-ft wide x 3.5-ft deep
- Stage Cycle: A = Adsorption, B = Regeneration, C = Cool Down

ConocoPhillips

Capital Costs

Calculated for 1,060 tons CO2/day, Installed (MM $USD)

	Wet Amine	Solid Adsorbent
Vessels	$ 9	$ 21
Exchangers	$ 13	$ 5
Blowers/Pumps	$ 2	$ 22
Offsites	$ 5	$ 5
Adsorbent	$ 0.4	$ 10
TOTAL	$ 29MM	$ 63MM

ConocoPhillips

Operating Costs

Calculated for 1,060 tons CO2/day (MM $USD/yr)

	Wet Amine	Solid Adsorbent
Steam	$ 8	$ 2
Electricity	$ 1	$ 8
Other Utilities	$ 1	$ 1
LMO*	$ 2	$ 3
Adsorbent	$ 1	$ 5
TOTAL	$ 13 MM/yr	$ 19 MM/yr

** Labor, Maintenance and Overhead*

ConocoPhillips

Comparing Capture Costs

Wet Amine vs. Solid Adsorbent

CO2 Balance (tons CO2/year)	MEA	Solid Ads
CO2 Captured	367,555	367,555
Capture Unit CO2 Emissions	(89,407)	(120,814)
Avoided CO2	278,148	246,741
$USD/ton-Avoided CO2	**$80**	**$142**

Utility CO2 Emission Factors

Electricity 1.341 lbs CO2/kW-hr

Steam 0.156 lbs CO2/lb steam

ConocoPhillips

Cost Sensitivity of Solid Ads Capture

I. Effect of Adsorbent Properties

II. Effect of Pressure Drop

ConocoPhillips

Effect of Adsorbent Properties

- CO2 Capacity
- Cost
- Life

– *Base Case: 2 gm-mol CO2/kg, $5USD/lb & 2 year life*

– *CO2 capacity is averaged over its operating life (4,200 cycles/year)*

– *Define a new variable, R:*

R = Cost/Life ($/lb/year)

[Example: $10/lb adsorbent lasting 5 years, R = 2]

ConocoPhillips

Importance of Adsorbent Properties

Values Required to Break Even with MEA

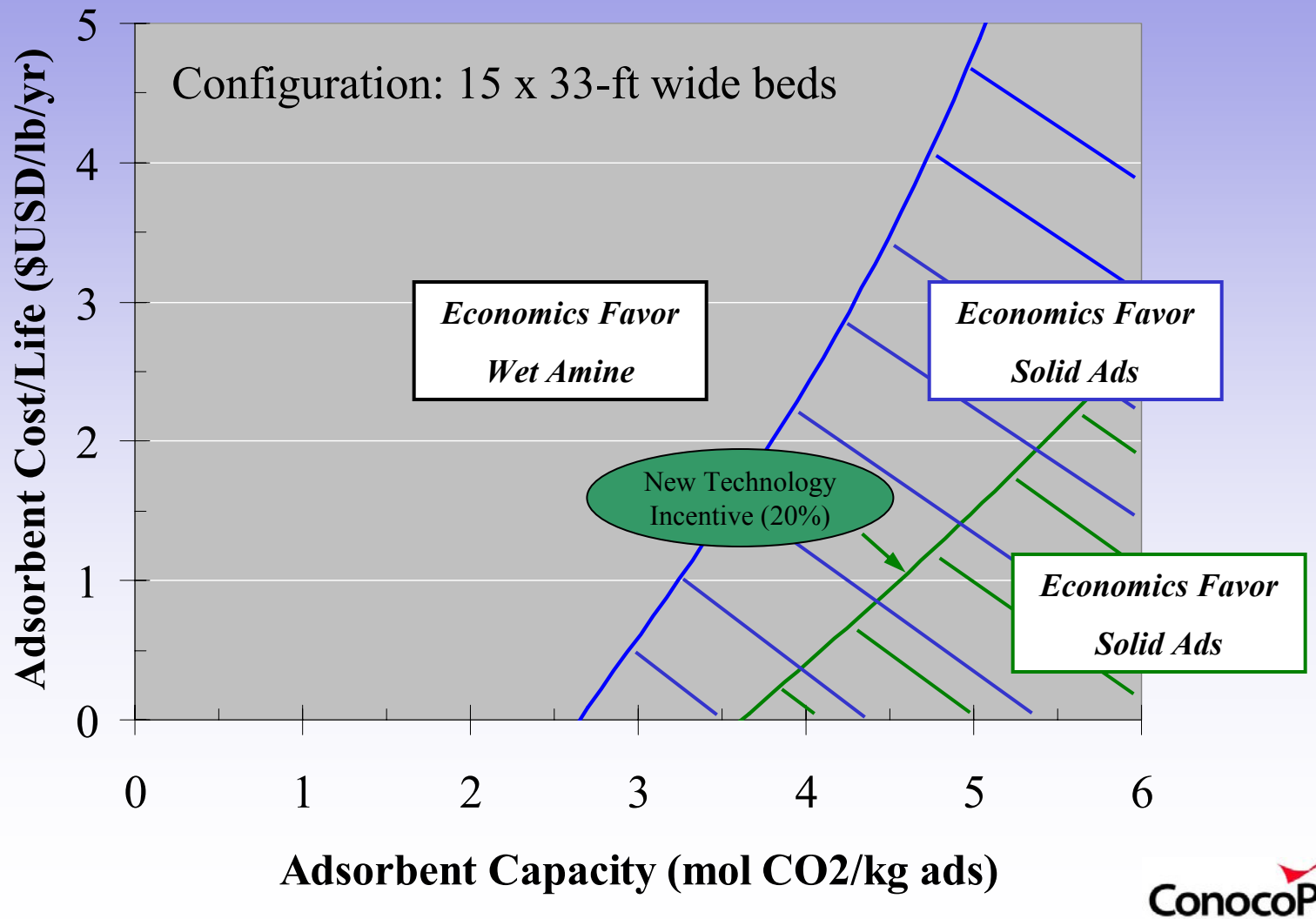

ConocoPhillips

Importance of Pressure Drop

- Affects size of blowers, which impacts capital costs (equipment) and operating costs (electricity)
- Pressure drop decreases with:
  - Thinner beds or low L/D “pancake-shaped” vessels
  - Higher open-porosity adsorbent (e.g. monolith)
  - Both

ConocoPhillips

Solid Ads Capture Cost

Sensitivity to Pressure Drop

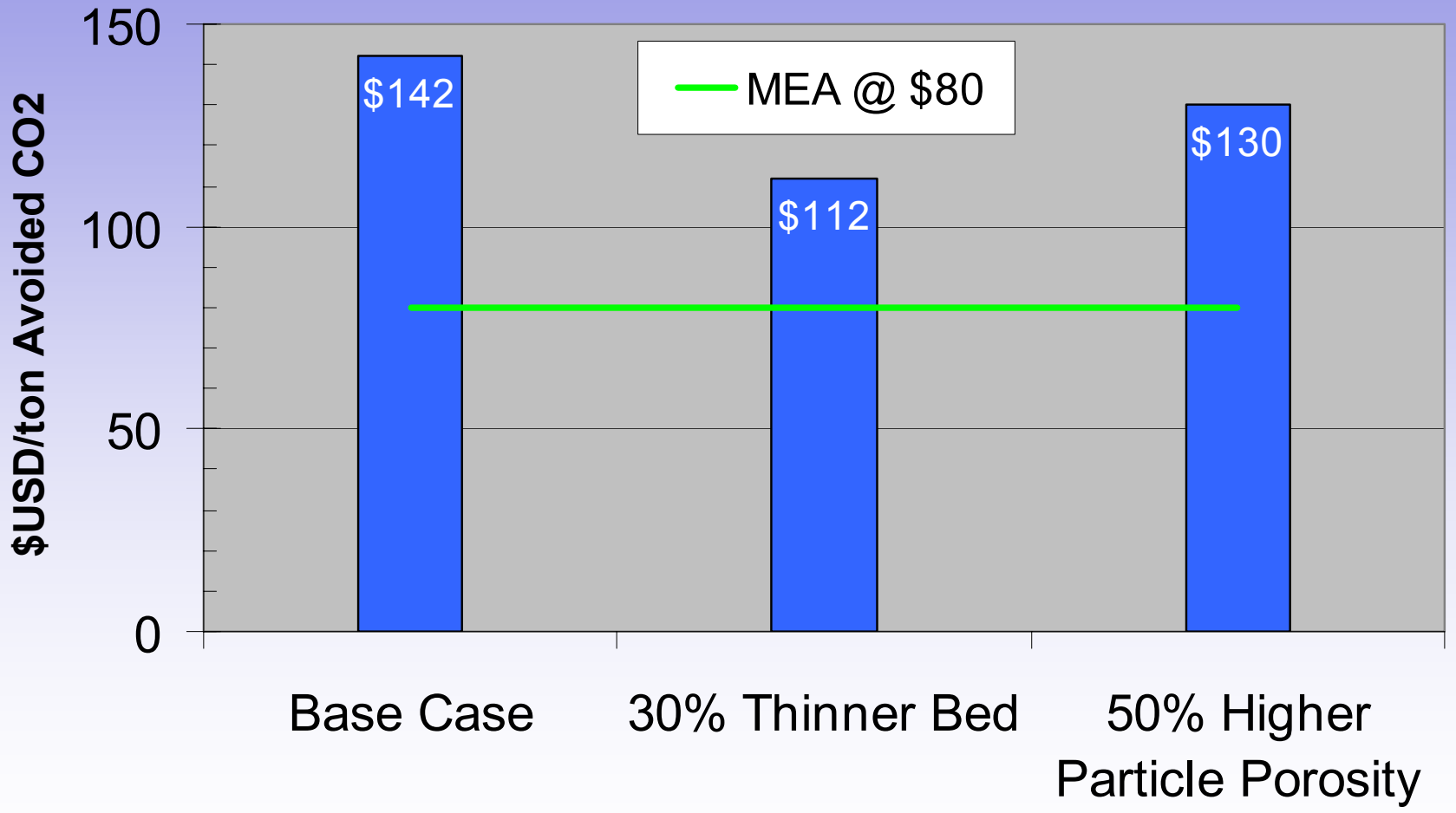

ConocoPhillips

Summary

- The FCC flue-gas CO2 capture cost of a fixed-bed process is 80% higher than a traditional MEA scrubber, based on an adsorbent with 2 mol/kg CO2 capacity, $5 USD/lb cost and 2-yr. life.
- The fixed-bed solid adsorbent process is more expensive because of high electrical power consumption, batch operation, and adsorbent cost.
- Solid adsorbent process is penalized by the higher CO2 emission factor of electricity relative to steam.
- Displacing MEA capture technology in this application will require an adsorbent with 4-5 mol/kg CO2 capacity and a cost/life ratio of 1-2 $USD/lb/yr.

ConocoPhillips

Thank You

ConocoPhillips