the ENERGY lab

PROJECT FACTS

Carbon Storage - MVA

# Compact Eye-safe Scanning Differential Absorption LIDAR (DIAL) for Spatial Mapping of Carbon Dioxide for MVA at Geologic Carbon Sequestration Sites

## Background

The overall goal of the Department of Energy's (DOE) Carbon Storage Program is to develop and advance technologies that will significantly improve the effectiveness of geologic carbon storage, reduce the cost of implementation, and prepare for widespread commercial deployment between 2020 and 2030. Research conducted to develop these technologies will ensure safe and permanent storage of carbon dioxide ($CO_2$) to reduce greenhouse gas (GHG) emissions without adversely affecting energy use or hindering economic growth.

Geologic carbon storage involves the injection of $CO_2$ into underground formations that have the ability to securely contain the $CO_2$ permanently. Technologies being developed for geologic carbon storage are focused on five storage types: oil and gas reservoirs, saline formations, unmineable coal seams, basalts, and organic-rich shales. Technologies being developed will work towards meeting carbon storage programmatic goals of (1) estimating $CO_2$ storage capacity +/- 30 percent in geologic formations; (2) ensuring 99 percent storage permanence; (3) improving efficiency of storage operations; and (4) developing Best Practices Manuals. Developing and deploying these technologies on a large scale will require a significantly expanded workforce trained in various carbon capture and storage (CCS) technical and non-technical disciplines that are currently under-represented in the United States. Education and training activities are needed to develop a future generation of geologists, scientists, and engineers who possess the skills required for implementing and deploying CCS technologies.

Monitoring, verification, accounting (MVA), and assessment efforts are designed to confirm permanent storage of $CO_2$ in geologic formations, both onshore and offshore, through multilevel monitoring programs that are both reliable and cost-effective. Monitoring is an important aspect of $CO_2$ injection and storage because it focuses on a number of permanence issues. Onshore monitoring technologies are developed for surface (atmospheric), near-surface (underground source of drinking water formations), and subsurface (injection and confining zones) applications to ensure that injection and abandoned wells are structurally sound and that $CO_2$ will not endanger sources of drinking water. Since Federal and State GHG regulations or emission trading programs have been developed, monitoring has gained importance as a means to ensure $CO_2$ has been safely and permanently stored underground. The location of the injected $CO_2$ plume in the underground formation can also be determined, via monitoring, to satisfy operating

## CONTACTS

**Traci Rodosta**
Carbon Storage Technology Manager
National Energy Technology Laboratory
3610 Collins Ferry Road
P.O. Box 880
Morgantown, WV 26507
304-285-1345
traci.rodosta@netl.doe.gov

**William W. Aljoe**
Project Manager
National Energy Technology Laboratory
626 Cochrans Mill Road
P.O. Box 10940
Pittsburgh, PA 15236-0940
412-386-6569
william.aljoe@netl.doe.gov

**Kevin Repasky**
Principal Investigator
Electrical and Computer Engineering
Montana State University
Cobleigh Hall Room 610
Bozeman, MT 59715
406-994-6082
repasky@ece.montana.edu

## PARTNERS

Big Sky Carbon Sequestration Partnership

## PROJECT DURATION

| Start Date | End Date |
|---|---|
| 10/01/2009 | 03/31/2014 |

## COST

**Total Project Value**
$515,246

**DOE/Non-DOE Share**
$405,119 / $110,127

## PROJECT NUMBER

DE-FE0001156

U.S. DEPARTMENT OF ENERGY

requirements for onshore storage under EPA's Underground Injection Control (UIC) program and GHG reporting programs, to ensure that potable groundwater and ecosystems are protected. This project is developing, testing, and deploying a scanning eye-safe diode laser-based Differential Absorption Lidar (DIAL; LIDAR = Laser Induced Differential Absorption Radar).

## Project Description

The DIAL instrument is designed to perform near-surface mapping of $CO_2$ number densities for MVA to determine possible $CO_2$ leakage to the atmosphere at geologic carbon storage sites. Development of the $CO_2$ DIAL will build on Montana State University's (MSU) expertise in developing compact, low-power, high-repetition-rate DIAL instruments for atmospheric studies. Horizontal testing of the $CO_2$ DIAL instrument has already been conducted to determine its performance at the Zero Emissions Research Technology (ZERT) field site during a controlled release experiment. MSU is currently working with the Big Sky Carbon Sequestration Partnership to deploy the $CO_2$ DIAL at the Kevin Dome large-scale carbon storage demonstration project site.

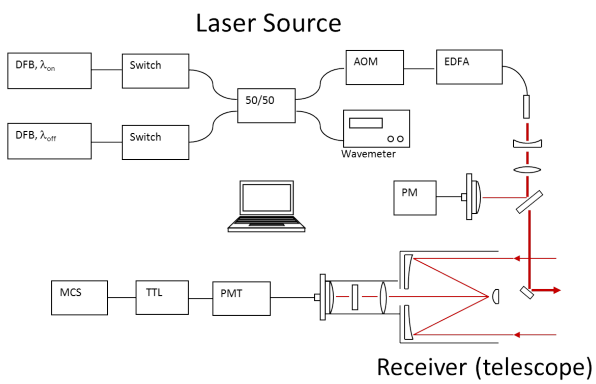


*Figure 1. Schematic of the DIAL instrument for monitoring $CO_2$ number densities.*

## Goals/Objectives

The overall project goal is to develop, test, and deploy a scanning, compact, eye-safe diode laser-based DIAL instrument for near-surface mapping of $CO_2$ number densities. This tool will assist MVA of $CO_2$ at geologic carbon storage sites over large areas for extended periods. Specific project objectives are:

- **Phase 1:** Development and construction of the $CO_2$ DIAL and operating software.
- **Phase 2:** Horizontal testing of the $CO_2$ DIAL instrument at the ZERT controlled release facility.
- **Phase 3:** Deployment of the $CO_2$ DIAL instrument at a field site where $CO_2$ is being injected into a geologic formation.

## Accomplishments

- **Phase 1:** The $CO_2$ DIAL was built using off-the-shelf tele-communications components, and the software essential to its operation was developed by MSU's Applied Optics and Optical Sensing Research Group.
- **Phase 2:** During testing in the laboratory and at the ZERT outdoor controlled-$CO_2$ release site in Bozeman, MT, the DIAL instrument has consistently measured atmospheric $CO_2$ concentrations that are comparable to literature values (average ~360 ppm) over a working range of approximately 3 kilometers (km). Measurements made remotely by the DIAL instrument at ~ 1.25 km from the ZERT site compared favorably with those made by a commercial $CO_2$ sensor placed directly on the site (Figure 2). After completion of the ZERT site testing, increased emphasis has been placed on improving the instrument's signal-to-noise performance and field-ruggedness, and exploring commercialization opportunities with the private sector.
- **Phase 3:** The third phase of the project involves further deployment and testing of the DIAL instrument at the Kevin Dome site (Toole County, MT) where large-scale injection of $CO_2$ (approximately 1 million metric tons) is planned under Phase III of the Big Sky Carbon Sequestration Partnership (project DE-FC26-05NT42587). The DIAL was deployed at the site between July 9th and August 7th, 2013. The instrument was located approximately 1 km from where a future $CO_2$ production well will be drilled. $CO_2$ concentrations were measured at distances from 1 to 2.5 km away from the instrument, and compared favorably to data collected with a commercial $CO_2$ point sensor placed in the proximity of the DIAL instrument.

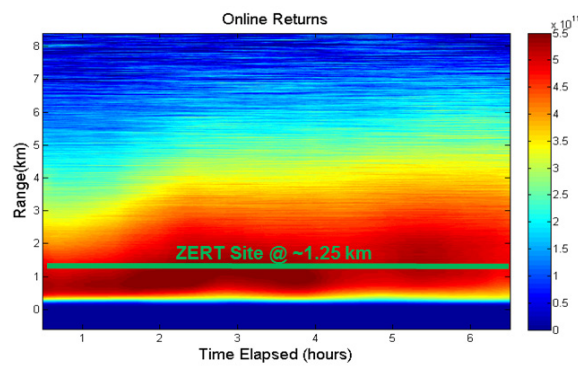


*Figure 2. Test results from ZERT site.*

## Benefits

Successful surface monitoring at geologic carbon storage sites requires low-cost instrumentation capable of covering large areas for extended periods. The DIAL instrument will be capable of producing range-resolved $CO_2$ number density maps with the ability to monitor several square kilometers at a resolution on the order of 100 m. If successful, the DIAL instrument could be adapted to map $CO_2$ concentrations over a wide surface area, thereby facilitating the identification of potential leakage points. Also, the DIAL instrument can be repeatedly scanned to provide the measurements over extended time intervals. As it will be portable and have minimal power requirements, the DIAL instrument will be easily incorporated into existing and future carbon storage efforts. Furthermore, the scanning DIAL will be an eye-safe instrument. The successful completion of this project therefore has the potential to advance the technology development needed for successful geologic carbon storage, and further the Carbon Storage Division Programmatic goal of ensuring 99 percent $CO_2$ storage permanence.