the ENERGY lab

PROJECT FACTS

Carbon Sequestration

Thermal Integration of CO_2 Compression Processes with Coal-Fired Power Plants Equipped with Carbon Capture

Background

Increased attention is being placed on research into technologies that capture and store carbon dioxide (CO_2). Carbon capture and storage (CCS) technologies offer great potential for reducing CO_2 emissions and, in turn, mitigating global climate change without adversely influencing energy use or hindering economic growth.

Deploying these technologies in commercial-scale applications requires a significantly expanded workforce trained in various CCS specialties that are currently under-represented in the United States. Education and training activities are needed to develop a future generation of geologists, scientists, and engineers who possess the skills required for implementing and deploying CCS technologies.

The U.S. Department of Energy's (DOE) National Energy Technology Laboratory (NETL) has selected 43 projects to receive more than $12.7 million in funding, the majority of which is provided by the American Recovery and Reinvestment Act (ARRA) of 2009, to conduct geologic sequestration training and support fundamental research projects for graduate and undergraduate students throughout the United States. These projects will include such critical topics as simulation and risk assessment; monitoring, verification, and accounting (MVA); geological related analytical tools; methods to interpret geophysical models; well completion and integrity for long-term CO_2 storage; and CO_2 capture.

Project Description

DOE is partnering with Lehigh University to study the effects of utilizing heat rejected by CO_2 compressors to improve power plant efficiency and increase net power output of coal-fired power plants retrofitted with CCS technologies. All coal-fired power plants, equipped either with oxy-combustion, post-combustion CO_2 capture, or pre-combustion capture in the case of an Integrated Gasification Combined Cycle (IGCC) plant, will require a CO_2 compression system to increase CO_2 pressure to the level needed for sequestration. Most estimates show that CO_2 compression will have a significant effect on parasitic load, will be a major capital cost, and will contribute significantly to reduced unit efficiency.

During the project, Lehigh University will use first-principle engineering analyses and computer simulations to determine the potential for thermal integration of the various compression processes with the carbon capture system, boiler, and turbine cycle. The project's models and simulations will focus on post combustion CO_2 capture and on oxy-combustion boilers. In both cases, analyses will be performed for bituminous, Powder River Basin (PRB) and lignite coals. Among the thermal integration opportunities to be analyzed are the use of compressor waste heat to

CONTACTS

John Litynski
Sequestration Technology Manager
National Energy Technology Laboratory
626 Cochrans Mill Road
P.O. Box 10940
Pittsburgh, PA 15236-0940
412-386-4922
john.litynski@netl.doe.gov

Darin Damiani
Project Manager
National Energy Technology Laboratory
3610 Collins Ferry Road
Morgantown, WV 26507
304-285-4398
darin.damiani@netl.doe.gov

Edward Levy
Principal Investigator
Lehigh University
Packard Laboratory
19 Memorial Drive West
Bethlehem, PA 18015
610-758-4090
ekl0@lehigh.edu

PROJECT DURATION

Start Date
12/01/2009

End Date
06/29/2012

COST

Total Project Value
$430,827

DOE/Non-DOE Share
$299,901/$130,926

Government funding for this project is provided in whole or in part through the American Recovery and Reinvestment Act.

regenerate post-combustion CO_2 capture solvents, preheat boiler feed-water, and to pre-dry high-moisture coals prior to pulverizing them. The objective is to generate and analyze results which will provide new insights into the role that potential thermal integration options involving CO_2 compressors and the rest of the unit can play in reducing CCS costs.

The project is divided into two separate phases: a literature review and initial compressor calculations (Phase I), and modeling compressor thermal integration options (Phase II). In Phase I, project personnel will compile information on compressor design and performance, and calculate compressor power requirements per stage, heat transfer performance of the interstage heat exchangers, and CO_2 pressure drop between stages. In Phase II, project personnel will examine the effects of thermal integration of CO_2 compressor heat recovery on power plant performance for both coal-fired power plants equipped with solvent-based post-combustion CO_2 capture systems, and for oxyfiring power plants by using ASPEN Plus software to model boilers, turbine cycles, carbon capture systems, and CO_2 compressors.

Data obtained during the performance period will provide new insights into the role of thermal integration on power plant performance and will be made available in public forums in order to obtain public feedback. Project research will be conducted primarily by graduate students.

Goals/Objectives

The goal of the project is to determine the effects of utilizing heat rejected by CO_2 compressors to improve power plant efficiency, increase net power output (particularly for post-combustion and oxy-combustion plants), and enhance graduate students' knowledge of CCS technologies. Specific project objectives include:

- Training students in the use of ASPEN PLUS software for modeling coal-fired power plants with carbon capture.
- Performing analyses for different types of compressors for both oxy-combustion and post combustion capture, and with eastern and western coals.
- Quantifying the effects of using waste heat from compressors.

Benefits

Overall the project will make a vital contribution to the scientific, technical, and institutional knowledge needed to establish frameworks for the development of commercial-scale CCS. Further, project results will provide new insight into the role that potential thermal integration options involving CO2 compressors and power plants can play in reducing CCS costs.

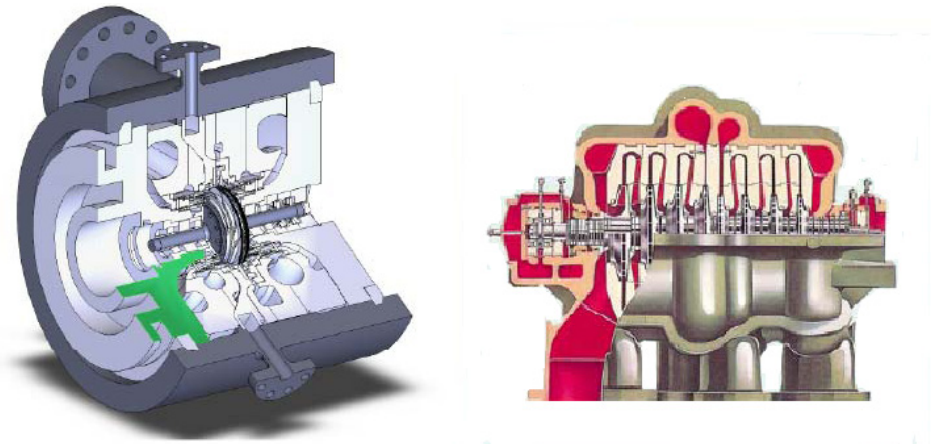

Figure 1. Schematic of typical compressor types. The image on the left is the Ramgen Discrete – Drive HP Stage compressor and on the right is the Hitachi Inline Process CO_2 compressor. The developers of the Ramgen supersonic shock wave compressor have indicated that it will be able to achieve compression ratios of close to 10 for each stage. If successful, compression of the CO_2 to sequestration pressures will occur in two stages. The CO_2 leaving each stage will have temperatures in the 450 to 500°F range, which will open up the possibility of using heat from the discharged CO_2 for applications such as regenerating solvent in a CO_2 stripper or preheating boiler feedwater to increase the MW output of the unit. The temperature of the CO_2 leaving each of the compressor stages on the Hitachi Inline design would be only 200°F, which would limit its usefulness as a heat source.