Full Scale Field Trial of the Low Temperature Mercury Capture Process

U.S. DOE Cooperative Agreement No. DE-FC26-06NT42777

CONSOL Energy Inc.
Research & Development
4000 Brownsville Road
South Park, PA 15129-9566

James E. Locke
Principal Investigator
(412) 854-6607
jimlocke@consolenergy.com

Richard A. Winschel
Project Manager
(412) 854-6683
dickwinschel@consolenergy.com

FINAL REPORT
FOR WORK PERFORMED DURING THE PERIOD
October 1, 2006 to September 30, 2011

Issue Date:

May 21, 2012

ACKNOWLEDGEMENT

This material is based upon work supported by the Department of Energy under Award Number DE-FC26-06NT42777.

DISCLAIMER

This report was prepared as an account of work sponsored by an agency of the United States Government. Neither the United States Government nor any agency thereof, nor any of their employees, makes any warranty, express or implied, or assumes any legal liability or responsibility for the accuracy, completeness, or usefulness of any information, apparatus, product, or process disclosed, or represents that its use would not infringe privately owned rights. Reference herein to any specific commercial product, process, or service by trade name, trademark, manufacturer, or otherwise does not necessarily constitute or imply its endorsement, recommendation, or favoring by the United States Government or any agency thereof. The views and opinions of authors expressed herein do not necessarily state or reflect those of the United States Government or any agency thereof.

Abstract

CONSOL Energy Inc., with partial funding from the Department of Energy (DOE) National Energy Technology Laboratory, designed a full-scale installation for a field trial of the Low-Temperature Mercury Control (LTMC) process, which has the ability to reduce mercury emissions from coal-fired power plants by over 90 percent, by cooling flue gas temperatures to approximately 230 °F and absorbing the mercury on the native carbon in the fly ash, as was recently demonstrated by CONSOL R&D on a slip-stream pilot plant at the Allegheny Energy Mitchell Station with partial support by DOE.

LTMC has the potential to remove over 90 percent of the flue gas mercury at a cost at least an order of magnitude lower (on a $/lb mercury removed basis) than activated carbon injection. The technology is suitable for retrofitting to existing and new plants, and, although it is best suited to bituminous coal-fired plants, it may have some applicability to the full range of coal types.

Installation plans were altered and moved from the original project host site, PPL Martins Creek plant, to a second host site at Allegheny Energy's R. Paul Smith plant, before installation actually occurred at the Jamestown (New York) Board of Public Utilities (BPU) Samuel A. Carlson (Carlson) Municipal Generating Station Unit 12, where the LTMC system was operated on a limited basis.

At Carlson, over 60% mercury removal was demonstrated by cooling the flue gas to 220-230 °F at the ESP inlet via humidification. The host unit ESP operation was unaffected by the humidification and performed satisfactorily at low temperature conditions.

Table of Contents

Abstract ii
Introduction 1
Executive Summary 3
Experimental 4
PPL Martins Creek 4
Baseline Testing 4
Project Planning and Activities 6
Allegheny Energy R. Paul Smith 7
Baseline Testing 7
Project Planning and Activities 11
R. Paul Smith LTMC Parametric Testing 11
R. Paul Smith Termination 14
Allegheny Energy Armstrong Station 14
Jamestown BPU Carlson Station 14
Task Details 15
Task 1: Permitting & Planning 15
Task 2: Baseline Testing 17
Task 3: Installation 17
Task 4: Process Testing 19
Operations Evaluation 19
Process Testing 20
Results and Discussion 20
Mercury Sampling and Control 20
Test Conditions 20
Test Results 21
Baseline Testing 21
LTMC Testing 21
Mercury Fly Ash Adsorption 22
Mercury Removal 24
ESP Impact 25
Process Economic Analysis 26

Formal Presentations 27
Conclusion 27
Bibliography 27

Figures

Figure 1. Conceptual schematic of an LTMC installation. 2
Figure 2. PPL Martins Creek ESP inlet sampling location. 5
Figure 3. PPL Martins Creek ESP outlet sampling location. 5
Figure 4. R. Paul Smith ESP inlet sampling location. 8
Figure 5. R. Paul Smith stack location. 8
Figure 6. SO_3 control system at R. Paul Smith station. 11
Figure 7. Existing water spray system header at R. Paul Smith station. 12
Figure 8. LTMC installation P&ID. 16
Figure 9. Carlson Unit 12 stack emissions sampling location. 17
Figure 10. Water spray from one of the humidification lances. 18
Figure 11. LTMC Water-Spray Manifold Components. 19
Figure 12. Ash Mercury Adsorption. 24

Tables

Table 1. Summary of Martins Creek Baseline Test Results. 6
Table 2. Summary of R. Paul Smith Baseline Air Heater Outlet SO_3 Test Results 9
Table 3. Summary of R. Paul Smith Baseline Mercury Testing at the Stack 9
Table 4. Summary of R. Paul Smith Baseline Hg Removal 10
Table 5. R. Paul Smith Baseline ESP Hopper Ash Analyses 10
Table 6. LTMC Parametric Testing Gas Phase SO3 Concentration. 13
Table 7. Test Period Comparison of Mercury Speciation and Removal with and without $Mg(OH)_2$ Injection 14
Table 8. Baseline emission test data. 21
Table 9. Summary of LTMC Operation Mercury Emissions and Removal Rates. 22
Table 10. ESP Ash Sample Analytical Results. 23
Table 11. Mercury Emission and Removal Rates Comparison. 25
Table 12. Jamestown BPU ESP Operational Parameters 26

Appendices

A PPL Martins Creek Baseline Test Report

B Allegheny Energy R. Paul Smith Emissions Testing Information

C Jamestown BPU Emissions Testing Information

D Jamestown BPU Process Data

E World Coal Association Case Study

Introduction

Coal-fired electric generating units (EGUs) are the largest source of anthropogenic mercury emissions in the United States (US). During this project, the US Environmental Protection Agency (EPA) made two attempts at actions to regulate emissions of mercury from EGUs. The first, the Clean Air Mercury Rule (CAMR), issued on March 15, 2005, was required to be vacated as the US Court of Appeals for the District of Columbia Circuit ruled the US EPA improperly delisted EGUs from the list of source categories regulated under section 112 of the Clean Air Act (CAA) (US Court of Appeals, 2008).

Consequently, the US EPA developed the Mercury and Air Toxics Standards (MATS), which were issued in final form on February 16, 2012, with an effective date of April 16, 2012. The standard set emissions limits for mercury as low as 1.3×10^{-2} pounds of mercury per gigawatt-hour of electric generation (lb/GWh) for existing non-low rank coal-fired EGUs and 2.0×10^{-4} lb/GWh for new non-low rank coal-fired EGUs. (US EPA, 2012)

MATS mercury reductions must be achieved by April 16, 2015. Various technologies are presently under development or commercially available to reduce mercury emissions from coal-fired power plants, although no one technology offers the promise of uniformly reducing mercury emissions across the spectrum of power plant configurations and coal types.

The current leading mercury-specific technology is powdered activated carbon (PAC) injection, also known as activated carbon injection (ACI). However, ACI can be expensive. When proposing MATS, US EPA assumed costs associated with controlling mercury for various unit sizes, configurations, and heat rates. To achieve a 90 percent mercury reduction on a 300 megawatt (MW) bituminous coal-fired unit with a 10,000 Btu/kilowatt-hour (kWh) heat rate that is equipped with a cold-side electrostatic precipitator (ESP) and no flue gas desulfurization (FGD), capital cost for an ACI system will be on the order of $3.8 million (mm). Fixed and variable costs were assumed to be $0.05/kilowatt-year (kW-yr) and $0.003/kilowatt-hour (kWh) (United States Environmental Protection Agency, 2011).

Other pollution control technologies can remove mercury from flue gases as a “co-benefit.” Various combinations of selective catalytic reduction (SCR), FGD, ESPs, and fabric filters (FF) can reduce stack mercury emissions. However, the co-benefit effect varies considerably from plant to plant. The development of new, low-cost mercury control technologies that are suitable for retrofitting to existing plants would greatly assist coal-fired electric generating plants in complying with anticipated mercury reduction requirements.

CONSOL Energy Inc., Research & Development (CONSOL), has developed the Low Temperature Mercury Capture (LTMC) process, which is a low-cost, technically-simple mercury control technology capable of achieving over 90% mercury removal. The concept is to absorb mercury on the existing fly ash in the flue gas, by cooling the flue gas to 200-240 °F with the existing air preheater (Arrangement A) or with a water spray

humidification system (Arrangement B). The fly ash and mercury are then captured in the power plant's particulate collection device.

In Arrangement A, an alkaline material such as magnesium hydroxide ($Mg(OH)_2$) may be injected into the flue gas upstream of the air preheater to capture sulfur trioxide (SO_3) and prevent corrosion of downstream equipment and ductwork. The process also offers the potential advantage of increasing overall plant efficiency if the air heater is used to reduce the flue gas temperature (Fenger & Winschel, 2006).

With Arrangement B, the simplest form of the process used when the existing air heater does not have excess cooling capacity, the LTMC system incorporates a water spray humidification system to cool the flue gas and potentially a $Mg(OH)_2$ injection system to mitigate potential acid gas corrosion problems; the process requires very little capital investment because it uses the existing particulate collection device to capture the mercury-laden particles. Below is a conceptual schematic of the process in its simplest form.

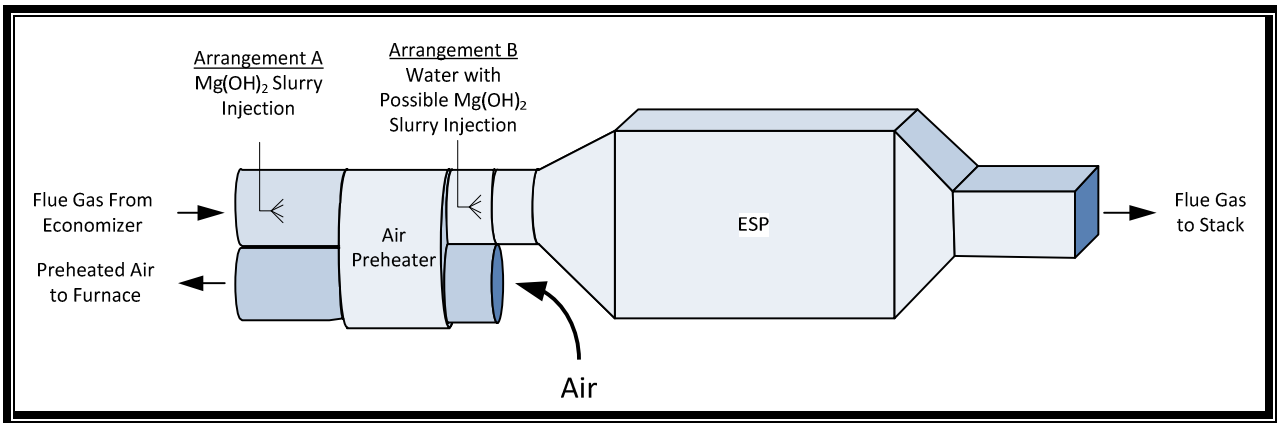

Figure 1. Conceptual schematic of an LTMC installation.

The $Mg(OH)_2$ injection system and the water spray injection system were designed and fabricated by Lechler, Inc. Lechler designed and fabricated the $Mg(OH)_2$ nozzles and the water spray nozzles used in CONSOL's pilot plant tests of the LTMC process at Allegheny Energy's Mitchell Station.

The $Mg(OH)_2$ was provided by Martin Marietta Materials, a leading U.S. producer of magnesia-based chemical products used in a variety of industrial, chemical and environmental applications.

The technology has several potential benefits; the most important being the potential to provide over 90% Mercury removal at a projected cost at least an order of magnitude lower than PAC injection. LTMC is suitable for retrofitting to existing plants provided that they generate sufficient quantities of unburned carbon in the fly ash. The process may be applicable to the full range of coal types, but its effectiveness has been shown so far only for bituminous coals. In addition to controlling mercury emissions, in most

cases the technology reduces the emissions of SO_3, which is a precursor of secondary fine particulate matter and is reportable under the Toxic Release Inventory.

Due to a change in DOE programmatic direction, DOE decided not to fully fund the project, preventing the team from performing the full-scale field test at the PPL Martins Creek Station Unit 1, as originally planned. The project team then endeavored to locate a suitable alternative host site at which the LTMC process could be field tested within the reduced available budget, even if it meant reducing the scope and operating time.

The Allegheny Energy R. Paul Smith Station Unit 4 appeared to be an excellent candidate, until it was determined that its operating conditions were so close to those of the LTMC process that it routinely achieved greater than 90% mercury capture at its baseline conditions, which included water-spray cooling; it was senseless to try to remove an additional 90%. Moreover, the retrofit addition of a fabric filtration device to the unit in early 2008 made this an even less attractive host site, because that only promised to increase the baseline removal of mercury.

Early in 2008, the project team was working with Allegheny Energy to move the project to Armstrong Unit 2, but it became apparent that that location was far from ideal for the field trial because of its large size, the split duct arrangement, and the presence of duct obstructions.

During the summer of 2008, a new, nearly ideal, location for the field trial was identified at the Jamestown (New York) Board of Public Utilities (BPU) Samuel A. Carlson (Carlson) Municipal Generating Station Unit 12, where the LTMC system was installed and operated on a limited basis.

Executive Summary

CONSOL Energy Inc., Research & Development (CONSOL), with support from the U.S. Department of Energy's (DOE) National Energy Technology Laboratory (NETL), conducted a five-year program to conduct a full-scale field trial of the Low Temperature Mercury Control process. The process was to be installed on a coal-fired power generating station to reduce mercury emissions.

The technology works by deeply cooling the exhaust gases with the air heater or with added water spray (designed and provided by Lechler, Inc.) and permitting the mercury to absorb on the native carbon in the flue gas fly ash that is then captured in the power plant's existing particulate collection device. An alkaline material (e.g. magnesium hydroxide slurry, provided in this project by our collaborator, Martin Marietta Materials) can be injected to remove sulfur trioxide and prevent corrosion and fouling of the power plant air heater and ductwork.

The process was initially planned for installation on the PPL Martins Creek Plant Unit 1 before a change in DOE programmatic direction reduced available funding for the project and forced a downscaling of plans, making it impossible to continue the test at the Martins Creek location. A second host site was found in the Allegheny Energy R. Paul Smith Unit 4 where baseline operations already included water spray for flue gas conditioning; however, an unplanned enhancement of the flue gas particulate control devices would have made achievement of the project goal of a 90% improvement over

baseline mercury removal unrealistic as the baseline mercury removal was already in excess of 90%. As a result, plans were terminated at the R. Paul Smith Plant.

Full installation finally occurred at the Jamestown (New York) Board of Public Utilities (BPU) Samuel A. Carlson (Carlson) Municipal Generating Station Unit 12, where the LTMC system was operated for a two-week period.

Over 60% mercury removal was demonstrated by cooling the flue gas via humidification to 220-230 °F at the ESP inlet. The host unit ESP operation was unaffected by the humidification and performed satisfactorily at low temperature conditions.

Experimental

Prior to selecting the final host plant, Jamestown BPU Carlson, the project was hosted at PPLs Martins Creek Station and the Allegheny Energy R. Paul Smith Station. Significant work was accomplished at each of these locations before the changes discussed above forced the relocation of the project to the next host site. The following sections detail that work.

PPL Martins Creek

Baseline Testing

The original host site for this project was the PPL Martins Creek plant on Unit 1. Activities at this location were initiated shortly after the project kick-off meeting in the fall of 2006. Unit 1 flue gas split into two separate flow paths, which allowed for direct comparison between a controlled stream ("A" Duct) and an uncontrolled stream ("B" Duct).

Lances were to be installed on the "A" Duct, between the air heater outlet and the ESP inlet, to spray a mix of water and magnesium hydroxide ($Mg(OH_2)$), which would reduce flue gas temperatures and neutralize acid gases.

Mercury and SO_3 sampling was performed on the "A" duct at the ESP inlet (Figure 3) while only mercury sampling was conducted on "A" and "B" ESP outlet ducts (Figure 4). Boiler coal and ESP ash samples were collected for each test period. The resulting test data provide baseline air heater outlet SO_3 concentrations, baseline total mercury removal, and "A" duct ESP mercury removal. Average "A" duct removal was comparable to the average overall removal; however, the mass balance for test three indicated that the coal samples or the results for that test may not have been representative of the actual mercury input; therefore, the results from that test are reported, but not included in any average mercury value.

The average results for the tests are summarized in Table 1.

Figure 2. PPL Martins Creek ESP inlet sampling location.

Figure 3. PPL Martins Creek ESP outlet sampling location.

Location / Parameter		ESP Inlet A	ESP Outlet A	ESP Outlet B
SO_3, ppmv[a] @ 0% O_2	Gas Phase	3.4		
	Total Phase	3.6		
	Dew Point, °F	240		
Particle-bound Hg	µg/dscm[b]	4.71	0.003	0.002
	mg/sec[c]	4.03	0.0003	0.0002
Oxidized Hg	µg/dscm	6.99	8.52	7.81
	mg/sec	0.60	0.67	0.65
Elemental Hg	µg/dscm	0.50	1.76	1.88
	mg/sec	0.04	0.14	0.16
Total Hg	µg/dscm	12.2	10.3	9.69
	mg/sec	1.05	0.80	0.81
Duct "A" Hg removal, ESP in-to-ESP out [%][d]		23.5		
Total Hg removal, coal-to-ESP out [%][d]		28.0		

a – Parts per million, by volume
b – Micrograms per dry standard cubic meter
c – Milligrams per second
d – Removals calculated on mg/sec basis.

Table 1. Summary of Martins Creek Baseline Test Results.

Sulfur trioxide (SO_3) and mercury sampling was conducted on the host unit during the week of December 4, 2006. SO_3 samples were only taken at the ESP inlet, "A" duct. ESP inlet flow measurements that were taken during the baseline testing were forwarded to Lecher and AirFlow Sciences for use in a computational fluid dynamics (CFD) model used in the design of the lance nozzle layout geometry.

Project Planning and Activities

In preparation of the project proceeding at Martins Creek, CONSOL and our collaborators, Lechler and Martin Marietta Materials, developed the plans necessary to proceed with the installation. The following activities were a part of that process:

- Acquisition of two Tekran continuous mercury monitoring systems to measure the mercury concentrations in the ESP "A" and "B" ducts,
- Electrical switch gear controls for the LTMC process components, and
- Completion of the CFD modeling to specify the lance nozzle arrangement.

Late in the second calendar quarter of the project DOE advised CONSOL that no additional funding would be allocated for this project. On April 11, 2007, CONSOL advised all of its suppliers, subcontractors, and collaborators to stop work in an effort to conserve funds. It was determined that, without the originally expected additional allocation, CONSOL would not have sufficient funds to complete the installation at Martins Creek Station and conduct the field test, as planned.

Allegheny Energy R. Paul Smith

While working through the cancellation of efforts at Martins Creek, we searched for an alternative host site where the main elements of the project could be completed within the reduced budget. Allegheny Energy's R. Paul Smith Station's 88MW bituminous coal-fired Unit 4 was identified as an attractive candidate host site. Particularly attractive features were that it produces ash with fairly high levels of unburned carbon and it used humidification for ESP performance enhancement, thus reducing the required budget for an LTMC test.

Baseline Testing

The Unit 4 ductwork splits the boiler flue gas into two streams designated "A" and "B," upstream of the ESP (Figure 4). The two ducts combine at the ESP inlet plenum, from which point the flue gas is routed through a common pathway through two sequential ESPs and then finally to the exhaust stack (Figure 5). Sulfur trioxide sampling was performed on both ducts at the air heater outlet while mercury sampling was conducted at the stack location only. Unit 4 operations incorporate a humidification system downstream of the air heater to condition the flue gas to enhance particulate matter removal. Four tests were conducted; two with the humidification system inactive and two with the system active to determine the impact humidification had on the flue gas, both in terms of SO_3 and mercury concentrations and flue gas temperatures.

Figure 4. R. Paul Smith ESP inlet sampling location.

Figure 5. R. Paul Smith stack location.

The resulting test data provide baseline air heater outlet SO_3 concentrations and baseline total mercury removal from coal input. The average results for the tests are summarized in Tables 2 and 3. The results show that humidification allowed for a

decrease in flue gas temperature at the stack from 297 °F to 278 °F, provided a decrease in SO_3 concentration, and perhaps a small increase in the already very high mercury removal.

Test No	Humidi-fication Status	Date & Time	Average Duct Temp., °F	Average Duct O_2, vol %, dry	SO_3 Concentration, ppmv[a] dry @ 0% O_2	
					As Sampled	Corrected to 0% O_2
BL-1	Inactive	09/11/2007 1615-1716	330	4.5	8.1	10.3
BL-2	Inactive	09/11/2007 1740-1841	326	4.5	6.1	7.8
BL-3	Active	09/12/2007 1023-1124	227	4.5	5.2	6.6
BL-4	Active	09/12/2007 1145-1246	262	4.0	2.2	2.8

a – Parts per million, by volume

Table 2. Summary of R. Paul Smith Baseline Air Heater Outlet SO_3 Test Results

Humidification Status		Inactive	Active
Average Flue Gas Temp.	**°F**	297	278
Particle-bound Hg, (dry)	**µg/dscm[a]**	0.12	0.11
	mg/sec[b]	0.02	0.01
Oxidized Hg, (dry)	**µg/dscm**	1.14	0.69
	mg/sec	0.12	0.08
Elemental Hg, (dry)	**µg/dscm**	0.25	0.25
	mg/sec	0.03	0.03
Total Hg, (dry)	**µg/dscm**	1.51	1.05
	mg/sec	0.17	0.12
Coal Feed Mercury Input, mg/sec		1.82	1.81
Total Hg removal, coal-to-ESP out [%]		90.7	93.4

a – Micrograms per dry standard cubic meter
b – Milligrams per second

Table 3. Summary of R. Paul Smith Baseline Mercury Testing at the Stack

The particle-bound and elemental mercury concentrations remained consistent regardless of humidification status; however, the vapor phase oxidized concentrations

decreased with the humidification system in service. The decrease in oxidized mercury translated to an improvement in baseline mercury removal as well.

Test Number	BL-1	BL-2	BL-3	BL-4
Humidification Status	Inactive	Inactive	Active	Active
Coal Hg input [mg/sec]	1.93	1.70	2.00	1.62
Total Hg in stack flue gas [mg/sec]	0.17	0.16	0.10	0.13
Hg removal, coal vs. stack [%]	91.2	90.6	95.0	92.0
Average Hg Removal [%]	90.9		93.5	

Table 4. Summary of R. Paul Smith Baseline Hg Removal

The high mercury removal reported from the R. Paul Smith Baseline testing was likely the combined result of the existing humidification system, the low ESP temperatures, and high levels of carbon in the fly ash (>33% avg.), which, in essence, proves the LTMC process theory. Table 5 details the results of the fly ash sample analyses.

Test No.	BL-1	BL-2	BL-3	BL-4
Test Date	09/11/07	9/11/07	09/12/07	09/12/07
Moisture (%, as det'd)	0.16	0.16	0.23	0.11
Ash (%, dry)	62.25	60.70	53.76	83.19
Total Carbon (%, dry)	35.71	38.56	42.49	16.15
Chlorine (%, dry)	0.011	0.010	0.018	0.005
Mercury (ppm, dry)	1.18	1.76	2.29	1.19
Major Ash Element (%, dry)				
SiO_2	31.93	30.32	31.97	47.65
Al_2O_3	18.9	18.49	18.67	25.6
TiO_2	0.95	0.99	0.99	1.44
Fe_2O_3	6.74	6.37	5.78	5.56
CaO	1.09	1.05	0.72	1.2
MgO	0.49	0.47	0.41	0.6
Na_2O	0.17	0.14	0.13	0.22
K_2O	1.65	1.55	1.46	2.23
P_2O_5	0.33	0.31	0.26	0.29
SO_3	0.24	0.23	0.31	0.17

Table 5. R. Paul Smith Baseline ESP Hopper Ash Analyses

Project Planning and Activities

In preparation of the LTMC testing at R. Paul Smith, a number of activities were conducted by CONSOL and our collaborators, including:

- One Tekran unit, originally ordered for the test at Martins Creek Station, was delivered and installed at R. Paul Smith Station;
- Operator training for the mercury analyzer was held at the R. Paul Smith Station;
- Martin Marietta installed the $Mg(OH)_2$ storage tanks, day tanks, injection pump, and hosing for SO_3 control. Figure 6 shows the day tanks and SO_3 control equipment, in place; and
- R. Paul Smith Station personnel installed the $Mg(OH)_2$ mixer and ratio controller.

Figure 6. SO_3 control system at R. Paul Smith station.

R. Paul Smith LTMC Parametric Testing

As a cost-saving measure, the project team utilized the existing humidification lances (Figure 7) for the LTMC system and the $Mg(OH)_2$ slurry injection system was plumbed into the existing water lines. The LTMC injection system was commissioned and operated by adding 65 lb/hr of a 60 percent $Mg(OH)_2$ slurry to the existing water spray system that operated at the maximum water flow rate of 19 gpm. Flue gas temperature control was limited by the existing system's available water flow. Within a week, the lances, nozzles, headers, hosing, etc. plugged solid with magnesium hydroxide. The hardware was cleaned and injection was resumed to allow for parametric emissions evaluations.

Figure 7. Existing water spray system header at R. Paul Smith station.

A test program was conducted to determine the impact of adding a 60 percent $Mg(OH)_2$ slurry injection to the existing Unit 4 Evaporative Gas Cooling (EGC) system on flue gas SO_3 and mercury concentrations as compared to the results of the baseline flue gas evaluation CONSOL conducted on Unit 4 on September 11 and 12, 2007. (Locke & Green, 2008). Flue gas mercury measurements were performed at the stack using the Ontario-Hydro Flue Gas Mercury Speciation Method (OH) (ASTM D6784-02).

During this test program a 60 percent $Mg(OH)_2$ slurry was introduced to the EGC system at a rate of 92.5 lb/hr, which is 84 percent of the slurry injection capacity in an attempt to achieve a $Mg(OH)_2/SO_3$ molar ratio of 5:1. The EGC system was in operation in each duct at a maximum rate of 19 gpm. Unit 4 was operating at 84 MW.

Sulfur trioxide was not sampled at the air heater outlet, as was done during the baseline testing as the air heater outlet sampling location is immediately downstream of the EGC system. At this location, the water added by the EGC system has not had sufficient time to evaporate; therefore, the slurry would not have enough time to impact the flue gas SO_3. CONSOL determined that the stack would be a more suitable sampling point for determination of flue gas SO_3 concentrations. The flue gas test program included one SO_3 measurement with the Controlled Condensation Method on the first sampling day to verify that the injection of $Mg(OH)_2$ reduced SO3 concentrations in the flue gas and one mercury measurement with OH on each of the two days of testing.

Table 6 presents the results of the SO_3 test conducted during $Mg(OH)_2$ injection. Results do not show additional SO_3 reduction over baseline conditions (Tables 1 and 2) with the addition of $Mg(OH)_2$ injection; however, the humidification system at R. Paul

Smith was not designed for slurry injection, which likely resulted in poor distribution of $Mg(OH)_2$.

Table 7 exhibits the coal feed rates and coal mercury concentrations along with flue gas temperatures and mercury concentrations for the $Mg(OH)_2$ injection tests. No appreciable improvement over the already deep mercury removal of baseline conditions (90-93%) was observed.

Sample Date	09/25/07
Test Condition	$Mg(OH)_2$ Injection
Sampling Location	Stack
Coal Feed Rate (kpph, dry)	78.3
Sulfur in Coal (%, dry)	0.87
Flue Gas Temperature (°F)	278
Gas Phase SO_3, (ppmvd @ 0% O_2)	7.7

Table 6. LTMC Parametric Testing Gas Phase SO3 Concentration.

Sample Date	9/25/2007		9/26/2007	
Test Condition	$Mg(OH)_2$ Injection		$Mg(OH)_2$ Injection	
Measurement Point	Coal Feed	Stack	Coal Feed	Stack
Coal Feed Rate (kpph, dry)	74.7		75.2	
Coal Hg (ppm, dry)	0.243		0.194	
Coal Hg (lb/Tbtu)	19.7		15.7	
Coal Hg (mg/sec)	2.29		1.84	
Flow (dscmm)		6,670		6,650
Flue Gas Temperature (°F)		277		250
Particle-Bound Hg (mg/sec)		0.11		0.12
Vapor-Phase Ionic Hg (mg/sec)		0.05		0.04
Vapor-Phase Elemental Hg (mg/sec)		0.007		0.004
Total Hg (mg/sec)		0.17		0.16
Coal-to-Stack Removal	92.6		91.3	

Table 7. Test Period Comparison of Mercury Speciation and Removal with and without $Mg(OH)_2$ Injection

R. Paul Smith Termination

In March of 2008, Allegheny Energy announced plans to replace the second Unit #4 ESP with a fabric filtration device. The modification to the pollution control train would require a repeat of the baseline testing, as we anticipated this would also enhance the baseline mercury removal. The outage for this work was scheduled for the second quarter of 2008, and would be completed at a time when seasonal ambient temperatures will be too high to allow for humidification of the flue gas to a 220 °F temperature, with the plants water capacity limitations. Given this delay and the unlikely possibility that we would be able to achieve a meaningful mercury removal improvement after reestablishing the baseline, following the modification, we began to search for a new host for the project. Simply put, R. Paul Smith Unit #4 was already practicing LTMC and the addition of a fabric filter would likely have made it even more effective.

Allegheny Energy Armstrong Station

Early in 2008, the project team was working with Allegheny Energy to move the project to Armstrong Unit 2, but it became apparent that that location was far from ideal for the field trial because of its large size, the split duct arrangement, and the presence of duct obstructions.

Jamestown BPU Carlson Station

Following the cancellation of our plans at R. Paul Smith, we met with the Jamestown Board of Public Utilities (BPU) that operates the Samuel A. Carlson (Carlson) Generating Station, located in Jamestown, New York. BPU operates four dry-bottom, pulverized coal wall-fired generation units at Carlson, which provide electricity to a total service area of 23 square miles including the City of Jamestown, the Villages of Celeron and Falconer, and portions of the Town of Ellicott, New York, with a service area population of about 48,000 and 19,800 metered customers.

The boilers are fueled with low-sulfur bituminous coal that is obtained from Northern Appalachian Basin coal mines (primarily from central western-Pennsylvania) and delivered to the plant by truck. The selected host unit, boiler 12, is the largest boiler at the plant with a 297 mmBtu/hr heat rating. The boiler has the capability to supply steam to one or both of the two 24.5 megawatt (MWe) steam turbine generators in operation at the plant. Due to the advanced age of Boiler 12, BPU typically operates the boiler at a derated level to generate approximately 20 MW of electricity. BPU management indicated to CONSOL R&D that they were seeking a low-capital cost technology to reduce their mercury emissions.

In 2007, the BPU took delivery of 67,509 tons of coal. The weighted average sulfur content was 1.7% dry, and the mercury content averaged 0.50 ppm, by weight. Compared to other Appalachian Basin bituminous coals, the coal they purchase is relatively low in sulfur and high in mercury concentrations; however, the coal is economically attractive to the plant.

BPU purchases low-sulfur coal because the Carlson Station has no flue gas desulfurization (FGD) system. Oxides of nitrogen (NOx) emissions are managed using low-NOx burners; the plant does not utilize selective catalytic reduction (SCR). Particulate matter is collected by a cold-side, three-field ESP. Each field has historically operated at an average of 31 kilovolts (kV). With this plant configuration, BPU cannot control mercury by way of co-benefits typically achieved from FGD and SCR technologies. CONSOL R&D believes the LTMC approach is an economically viable alternative to assist BPU with their mercury control.

Task Details

Task 1: Permitting & Planning

Task 1 included the preparation and submittal of the project National Environmental Policy Act (NEPA) questionnaire; as well as system design, equipment and material procurement, and installation of the water spray humidification system and PLC based control equipment to provide the necessary water flow rate and atomizing air pressure to achieve our target flue gas temperature.

The LTMC system can be designed with corrosion protection against SO_3 condensation by including an injection system for a dry- or slurry-based alkaline material, such as $Mg(OH)_2$, if warranted. To determine if this protection was necessary in this installation, CONSOL R&D reviewed the results of SO_3 testing that had been conducted several months before the initiation of project activities and found the SO_3 concentrations to be less than one ppmv.

Martin Marietta Materials engineers reviewed the SO_3 data and determined that the $Mg(OH)_2$ injection control system could not be operated at a rate low enough to control the low SO_3 concentration. The resulting $Mg(OH)_2$ consumption rate, when operating at the lowest possible injection rate, would result in an excessive, uneconomical use of $Mg(OH)_2$. Additionally, the SO_3 concentration was below the range that is typically necessary to control and was therefore unnecessary.

The system was designed to cool the flue gas by humidification using four water spray nozzles. To control the water spray rate, four thermocouples were installed to measure temperature across the flue gas duct, upstream of the ESP. The temperatures were averaged by process controllers, which provide a 4-20 mA signal to a variable frequency drive (VFD) that controls the water pump speed to deliver the water flow that is necessary for temperature control.

The project team utilized water from the station's reverse osmosis (RO) system for the LTMC water spray to limit the possibility of scaling on the spray nozzles. The RO system supplies water at a pressure of less than 70 pounds per square inch (psi); however, the LTMC spray nozzles require as much as 130 psi for proper atomization and the nozzles are located at a higher elevation than the RO outlet. Thus, for this installation RO water pressure was boosted with an inline, multistage, centrifugal pump. A process and instrumentation diagram of the installation is provided in Figure 8.

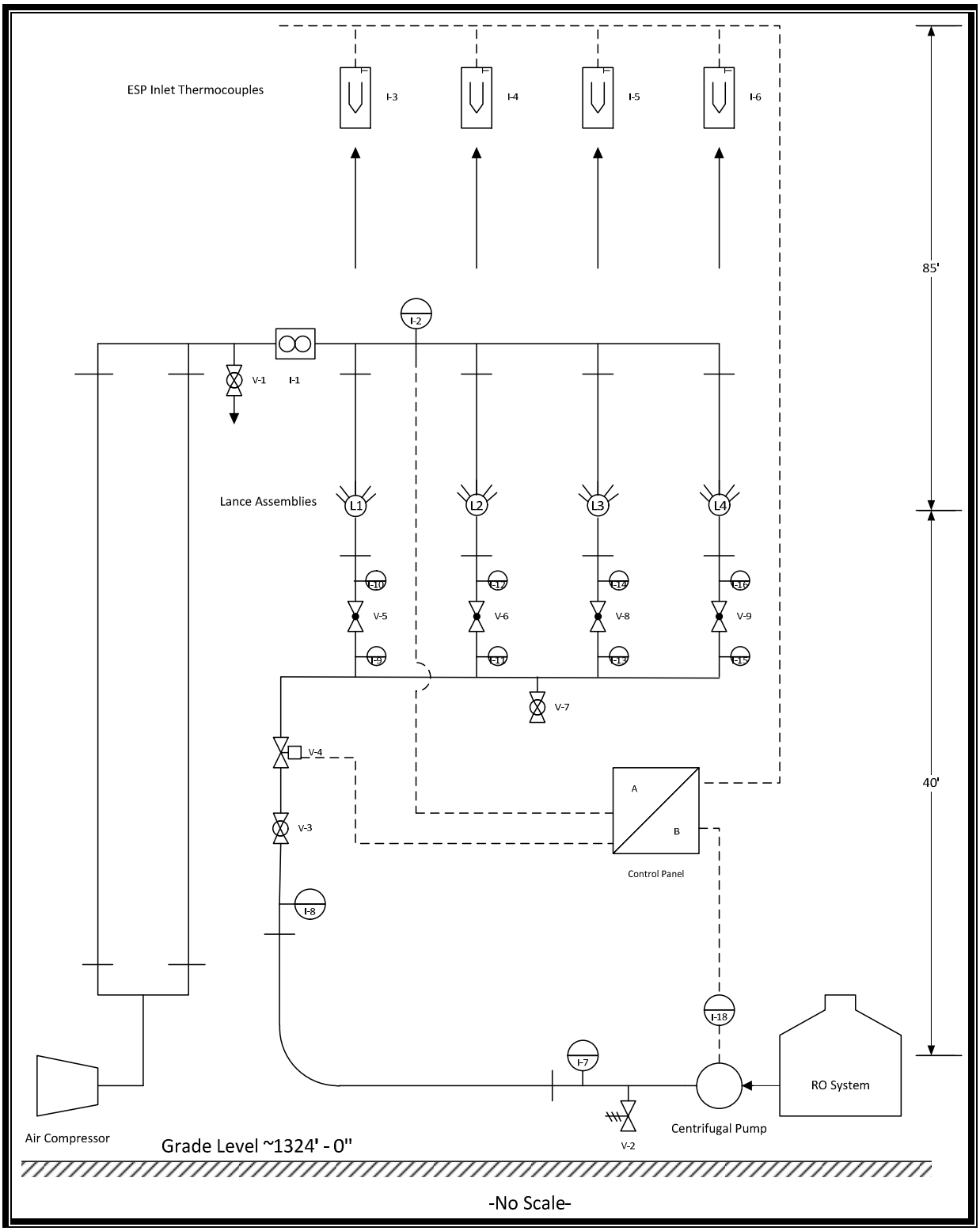

Figure 8. LTMC installation P&ID.

Task 2: Baseline Testing

During the installation of the LTMC system, background information was collected from the host unit that included boiler and ESP operational parametric data. Samples of baseline as-fired coal and ESP fly-ash were also collected during periods of flue gas mercury measurements, which were conducted at the ESP outlet, on the unit stack exhaust, using U. S. EPA Method 30B. Figure 9 provides an image of the stack sampling location. During the baseline tests, the host unit was operated at “normal” conditions. Two baseline test periods were conducted while the unit was firing with two coal feeder mills in operation (full load). Two additional baseline test periods were conducted with only one mill operating (half load).

Figure 9. Carlson Unit 12 stack emissions sampling location.

Task 3: Installation

Following receipt of the system components, the system was pieced together and tested at the CONSOL R&D facility to determine functionality. Figure 10 is a photo of the water spray from one of the spray lances during the mock testing. After testing, the components were separated in sections and delivered to the host site on March 23,

2009, where it was installed over the course of two days. Figure 11 provides a photograph of the water-spray manifold components installed in the air preheater outlet duct.

Figure 10. Water spray from one of the humidification lances.

Figure 11. LTMC Water-Spray Manifold Components.

Task 4: Process Testing

Operations Evaluation

Prior to releasing the LTMC system for operation, the system was tested with the unit at full and half loads, starting with full load, to determine the capabilities of the control system. The testing revealed that the system, as designed, provided excessive cooling from the 315 °F baseline temperature to the 230 °F set-point, as measured at the ESP inlet, was over-run and uncontrolled cooling continued. As attempts to correct the issue were made, excess water was found draining from the ductwork and the system was shut down.

After determining that the ductwork and other components of the generating unit had not suffered any damage, the LTMC system was restarted with water flow restricted to the two center spray nozzles (the two outside spray nozzles remained off). In this configuration, the LTMC system was able to maintain 230 °F with the boiler operating at full load; while using less water, and the water supply pump operating at approximately 60 percent.

Process Testing

After satisfactory completion of the operations evaluation, the LTMC system was turned over to automated operation on March 27, 2009, with the unit operating at full load and the process control temperature set at 230 °F. One five-day and two 24-hour periods were sampled at these conditions from March 27 through April 2.

Preliminary analytical results prompted a decrease in the LTMC system control temperature to 220 °F in an attempt to improve upon the mercury removal performance. The change in temperature was initiated on April 3. At this time, a decrease in load demand forced the unit to operate on only a single mill.

The system operated at the reduced load with the control temperature at 220 °F from April 3 through April 14, during which time one three-day, three 24-hour, and one five-day period was sampled.

During the long-term test period of March 27 through April 14, continuous mercury emission measurements were conducted with the plant's sorbent trap sampling system. Plant personnel also collected daily coal and ash samples. During the long-term test period the LTMC process control system was able to control gas temperature at 220 °F with only a minor air compressor operational problem encountered.

Results and Discussion

Mercury Sampling and Control

Test Conditions

Mercury control evaluations were attempted at baseline conditions (without LTMC) and two control temperature set-points:

1. Baseline conditions, no LTMC, 10% fly ash carbon.
    a. Two mercury emission tests were conducted at full boiler load. ESP inlet temperature at 315 °F.
    b. Two mercury emission tests were conducted at 50% boiler load. ESP inlet temperature at 300 °F.
2. ESP inlet temperature at 230 °F with water-spray humidification, full load boiler operation, 13% fly ash carbon.

    The system operated in automatic control. Seven days of operation were conducted at this condition. Samples were pulled after one five-day period and after two one-day periods.
3. ESP inlet temperature at 220 °F with water-spray humidification, 50% load boiler operation, 16% fly ash carbon.

    The system operated in automatic control. Eleven days of operation were conducted at this condition. Samples were pulled after one five-day period, after one three-day period, and after three one-day periods.

Test Results

Baseline Testing

Baseline mercury control was evaluated under the two operating conditions of the boiler: full load and half load. Mercury emissions averaged 27.76 pounds per trillion British thermal units (lb/TBtu) at full load and slightly less, 25.45 lb/TBtu, while operating at half load. Table 8 summarizes measured test variables reported for the baseline test periods.

Test Number		1	2	3	4
Date		3/24/09	3/24/09	3/24/09	3/26/09
Boiler Operation		Full Load	Full Load	Half Load	Half Load
LTMC Operation		None	None	None	None
Heat Input	mmBtu/hr	267.2	220.9	138.8	147.6
Hg Concentration	mg/dscm[a]	21.77	11.54	6.86	19.11
Hg emissions:	lb/hr[b]	7.03E-03	6.45E-03	2.74E-03	4.59E-03
	lb/Tbtu	26.31	29.20	19.76	31.13
Average Hg lb/TBtu		27.76		25.45	

a – milligrams of mercury per dry standard cubic meter of flue gas
b – pounds emitted per hour

Table 8. Baseline emission test data.

Low mercury concentrations in the baseline coal samples prompted an evaluation of the coal sampling procedures and we determined that the samples were not collected at the appropriate location, nor were they collected at the appropriate times to match with the flue gas emissions test periods. Consequently, baseline mercury removal rates could not be calculated and are therefore not reported.

LTMC Testing

Operation of the LTMC occurred with the boiler operating at full load and the process control temperature set at 230 °F. Comparing the calculated coal mercury feed to the measured mercury stack emissions for this period shows mercury removal rates that ranged between 53.0% and 75.9%, with an average of 61.9% (Sd = 12.3).

At the reduced load, with the control temperature at 220 °F, mercury removal rates varied between 57.8% and 71.6%, with an average mercury removal rate of 62.4% (Sd = 5.3).

Individual test results are exhibited in Table 9.

Test Condition	LTMC Operation - 230 °F			LTMC Operation - 220 °F				
Date, 2009	3/27-3/31	3/31-4/1	4/1-4/2	4/3-4/6	4/6-4/7	4/7-4/8	4/8-4/9	4/9-4/14
Unit Operation	Full Load	Full Load	Full Load	Half Load	Half Load	Half Load	Half Load	Half Load
Average Stack Flow, wscfm[a]	65,956	79,341	83,327	63,485	64,575	72,830	66,646	63,422
Average Stack Flow, wscmm[b]	1,868	2,247	2,360	1,798	1,829	2,063	1,887	1,796
Default Moisture, %	6	6	6	6	6	6	6	6
Average Stack Flow, dscmm[c]	1,756	2,112	2,218	1,690	1,719	1,939	1,774	1,688
Average Heat Input, mmBtu/hr	198	242	248	154	147	164	150	142
Coal HHV[d] (pulverized), Dry Btu/lb[e]	13,285	13,286	13,301	13,326	13,018	13,073	13,184	13,214
Calc'd Coal Feed, lb/hr	14,904	18,215	18,645	11,556	11,292	12,545	11,377	10,746
Coal Mercury, ppm, dry	0.324	0.365	0.347	0.295	0.404	0.37	0.352	0.368
Coal Mercury Feed, lb/hr	0.0048	0.0066	0.0065	0.0034	0.0046	0.0046	0.0040	0.0040
Coal Mercury Feed, lb/TBtu	24.39	27.47	26.09	22.14	31.03	28.30	26.70	27.85
Emissions:								
Hg, ug/m^3[f]	9.77	10.29	5.32	6.44	5.71	6.97	6.63	7.10
Hg, lb/hr	0.0023	0.0029	0.0016	0.0014	0.0013	0.0018	0.0016	0.0016
Hg, lb/Tbtu	11.46	11.88	6.29	9.34	8.83	10.90	10.37	11.17
Removal, %	53.0	56.8	75.9	57.8	71.6	61.5	61.2	59.9

a – standard cubic feet per minute, wet basis
b – standard cubic meters per minute, wet basis
c – standard cubic meters per minute, dry basis
d – higher heating value
e – British thermal units per pound
f – micrograms per cubic meter

Table 9. Summary of LTMC Operation Mercury Emissions and Removal Rates.

Mercury Fly Ash Adsorption

During each day of testing and LTMC operation, samples of the ESP ash were collected to be analyzed for mercury and carbon concentrations to review for potential correlations between the ash carbon concentration and the mercury removal. Table 10 presents the analytical results of these samples.

Date, 2009	Condition	As Determined Moisture (Wt %)	Mercury, ppm	Major Ash Elementals, Wt. %, Dry Basis													
				Ash	Carbon	Chlorine	Sulfur	SiO_2	Al_2O_3	TiO_2	Fe_2O_3	CaO	MgO	Na_2O	K_2O	P_2O_5	SO_3
3/24	Baseline, Full Load	0.16	3.35	89.99	10.20	0.0050	0.54	47.17	25.89	1.39	10.64	1.65	0.79	0.43	2.07	0.64	1.17
3/25	Baseline, Half Load	0.16	2.76	89.80	9.71	0.0050	0.61	47.36	25.99	1.43	10.05	1.73	0.83	0.41	2.10	0.62	1.42
3/26	Baseline, Half Load	0.27	2.24	90.14	10.35	0.0050	0.62	46.80	26.12	1.43	9.62	1.72	0.82	0.40	2.07	0.61	1.38
3/26	Baseline, Half Load	0.35	2.30	90.16	9.60	0.0050	0.70	47.06	26.47	1.42	9.31	1.67	0.77	0.35	1.99	0.67	1.49
3/27	230 °F, Full Load	0.26	3.32	90.48	8.99	0.0040	0.69	47.58	26.67	1.45	10.21	1.74	0.84	0.35	2.13	0.70	1.56
3/27	230 °F, Full Load	0.29	4.51	89.24	10.11	0.0070	0.68	47.30	26.11	1.42	10.08	1.69	0.83	0.33	2.12	0.71	1.47
3/31	230 °F, Full Load	0.43	7.35	88.23	9.72	0.0100	0.55	44.92	25.63	1.32	9.64	1.60	0.78	0.31	2.00	0.82	1.23
4/1	230 °F, Full Load	0.45	8.59	88.16	9.37	0.0151	0.75	43.17	24.96	1.28	10.01	1.61	0.82	0.33	2.01	0.84	1.61
4/2	230 °F, Full Load	0.27	0.946	78.54	20.02	0.0045	0.25	38.89	18.63	0.83	15.26	0.98	0.57	0.18	1.34	0.40	0.43
4/3	230 °F, Full Load	0.12	0.787	74.92	23.20	0.0070	0.28	36.39	18.38	0.80	13.46	0.95	0.55	0.18	1.30	0.40	0.40
4/3	220 °F, Half Load	0.35	8.84	86.93	10.91	0.0100	0.66	43.39	24.89	1.35	9.21	1.48	0.74	0.31	1.90	0.83	1.46
4/6	220 °F, Half Load	0.12	0.693	87.10	11.97	0.0035	0.21	45.44	21.38	0.80	18.00	0.91	0.68	0.17	1.70	0.39	0.48
4/7	220 °F, Half Load	0.15	0.904	82.05	17.41	0.0038	0.24	42.29	19.76	0.76	18.21	0.85	0.58	0.15	1.48	0.41	0.51
4/8	220 °F, Half Load	0.14	0.708	83.96	15.30	0.0037	0.23	41.66	19.96	0.74	19.44	0.94	0.62	0.18	1.49	0.42	0.54
4/9	220 °F, Half Load	0.16	0.597	83.17	16.41	0.0034	0.22	44.84	20.99	0.88	14.30	0.89	0.56	0.17	1.48	0.50	0.51
4/13	220 °F, Half Load	0.13	0.624	81.04	17.62	0.0073	0.32	38.80	18.31	0.72	20.11	0.93	0.59	0.17	1.38	0.38	0.77
4/14	220 °F, Half Load	0.12	0.914	74.40	23.85	0.0055	0.28	39.04	19.22	0.77	12.26	0.86	0.50	0.16	1.30	0.43	0.57
4/15	220 °F, Half Load	0.21	0.492	85.22	13.38	0.0048	0.23	42.79	20.25	0.75	19.31	1.01	0.64	0.17	1.52	0.39	0.56

Table 10. ESP Ash Sample Analytical Results.

Three of the daily full-load samples contained mercury levels that were much higher than the baseline results; however, the remaining two were far lower while having twice the carbon content.

Half load results were more consistent; although, the mercury concentrations were also lower than the baseline ash mercury concentrations. Additionally, the half-load samples, while consistent in mercury concentration, showed little correlation (R^2=0.42) with the carbon concentration.

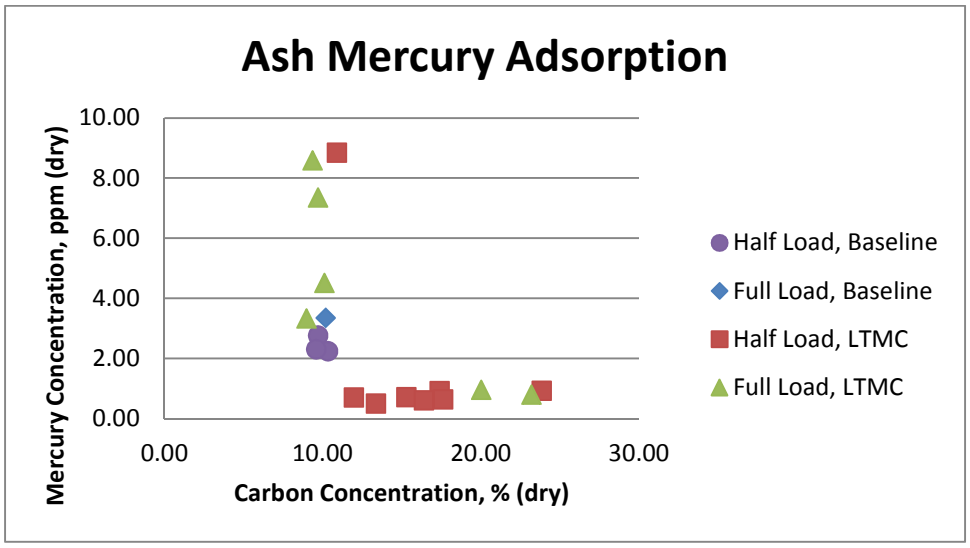

Figure 12. Ash Mercury Adsorption.

Mercury Removal

Table 11 details the mercury removal on Unit 12. During operation of the LTMC system, mercury removal rates averaged approximately 62%. Actual emission rates measured during the LTMC operational periods decreased similarly, compared to the baseline emission rates; full load operation saw a 64% reduction in the emission rate while the half load emissions reduction was 60%.

Unit Load	Process Control Temperature (°F)	Operating Period (2009)	Mercury Emission Rate (lb/TBtu)	Mercury Emission Rate Reduction[a]	Mercury Removal Range[b]	Period Average Removal
Full	Baseline	3/24	27.8		c	c
Half	Baseline	3/24 & 3/26	25.4		c	c
Full	230	3/27 – 4/2	9.87	64%	53% - 76%	62%
Half	220	4/3 – 4/14	10.1	60%	58% - 72%	62%

a – Controlled emission rate vs. baseline emission rate.
b – Percent of mercury removed comparing coal mercury feed to stack mercury mass emissions.
c – Data not reported due to incorrectly sampled feed coal.

Table 11. Mercury Emission and Removal Rates Comparison.

ESP Impact

ESP voltage and spark rates were compiled during baseline testing and LTMC operations periods. Table 12 shows the averages of the hourly primary and secondary voltages and the spark rate readings collected each day from each of the three fields in the Unit 12 ESP.

Regardless of the boiler load or ESP inlet temperature, the ESP data show an increase in voltage readings with the LTMC system in operation. A moderate increase, such as that shown, typically indicates a decrease in ash resistivity that will promote ash collection by the ESP. Since the spark rate was not impacted, the ESP operation is not detrimentally affected by the change in conditions.

Another consideration brought about by humidifying the flue gas is the concern of increased ash moisture that could create ash handling problems such as hopper plugging. Carlson operations personnel reported that this was not a problem as would be expected given the ash sample results reported in Table 10 show no increase in moisture over baseline results.

Unit Operation	Field	Voltage Readings		Spark Rate
		Primary V	Secondary KVa	
Baseline	A	309.9	37.2	0.3
	B	304.2	35.5	0.0
	C	263.5	32.8	0.0
230 °F, Full Load	A	356.4	41.6	0.1
	B	318.1	35.9	0.2
	C	284.6	33.6	0.1
220 °F, Full Load	A	357.7	41.5	0.1
	B	323.9	37.1	0.4
	C	284.8	33.6	0.0
220 °F, Half Load	A	353.3	40.8	0.0
	B	322.7	37.0	0.3
	C	286.9	33.9	0.0

Table 12. Jamestown BPU ESP Operational Parameters

Process Economic Analysis

Task 5.2 of the project was to be an evaluation of the process economics to develop a cost for mercury removal by the LTMC system on a $/lb basis. Various fixed and variable costs were identified for operations at Carlson; however, limited operational experience and low mercury control levels provided an inadequate data set for development of a meaningful analysis.

Because the technology makes use of the existing particulate collection equipment (ESP or FF) to remove the mercury, the only capital costs are the $Mg(OH)_2$ injection system and the cooling water spray injection system, both of which are relatively low cost systems. Alternatively, air heater upgrades could be performed instead of using water spray to cool the flue gas. Such upgrades could potentially pay for themselves in 2-4 years in the form of improved generating efficiency. The new technology requires no sorbent injection; activated carbon sorbents cost about $0.50/lb, or $1,000/ton. Because the high operating cost of the sorbent is eliminated, CONSOL projects that the new technology would cost about $1400 per pound of mercury removed, compared to estimates for ACI ranging from $20,000 to $70,000 per pound of mercury removed. A

600 MW plant using this technology, instead of ACI, would save $5 million to $16 million annually. Thus, the cost of mercury control using CONSOL's LTMC technology will be substantially lower than activated carbon injection.

Formal Presentations

This program resulted in three formal presentations at national or international technical meetings. Those presentations are listed below, in reverse chronological order:

Winschel, R. A.; Locke, J. E.; O'Palko, B. A. "Full-Scale Field Trial of the Low Temperature Mercury Control (LTMC) Process" presented at the Power-Gen International 2009 conference, Las Vegas, NV, December 8, 2009.

Winschel, R. A.; Locke, J. E.; O'Palko, B. A. "Low-Temperature Mercury Control Full-Scale Field Trial Preliminary Results" presented at the International Conference on Air Quality VII, Mercury, Trace Elements, and Particulate Matter, Arlington, VA, September 19-21, 2009.

Scandrol, R. O and Winschel, R. A. "Full-Scale Field Trial of the Low Temperature Mercury Control Process" presented at U.S. DOE-NETL's 2006 Mercury Control Technology Conference, Pittsburgh, PA December 11-13, 2006.

Additionally, the project was a featured case study, published on the World Coal Association website. The article can be accessed at the following internet address and is included in Appendix E:

http://www.worldcoal.org/resources/case-studies/consol-energy-/

Conclusion

Following the conclusion of the LTMC testing at Carlson Station, CONSOL recognized the need for additional baseline testing, improved temperature control, and a longer-term evaluation at full load condition. A programmable logic control system was purchased and installed on the system along with electronic water flow control valves and water flow meters; all of which would allow us to keep better account of the water consumption and improve the control of the water flow and, subsequently, control the temperature.

The new equipment was installed and evaluated during a brief operating period in early 2010. Attempts were made to test the system from the spring of 2010 through the fall of 2011; however, host unit operational problems, the unit operational schedule, and market economics prevented any long-term evaluations at any load condition as the unit ran sparingly during this period.

Bibliography

Fenger, M. L., & Winschel, R. (2006). *Multi-Pollutant Emissions Control Pilot Plant Study of Technologies for Reducing Hg, SO3, NOx, and SO2 Emisisons - Final Technical Report for the Period September 5, 2001, through May 5, 2005.* U. S. DOE NETL Cooperative Agreement DE-FC26-0141181.

Locke, J. E., & Green, B. W. (2008). *Baseline Mercury and Sulfur Trioxide Evaluation Field Testing Conducted September 11 and 12, 2007 at the Allegheny Energy R. Paul Smith Station Unit 4".*

United States Environmental Protection Agency. (2011). *Documentation Supplement for EPA Base Case v4.10_PTox - Updates for Proposed Toxics Rule.* EPA #430-R-11-006.

US Court of Appeals. (2008, February 8). *05-1097a: State of New Jersey, et al. v. Environmental Protection Agency; Opinion for the Court by Circuit Judge Rogers.*

US EPA. (2012, February 16). National Emission Standards for Hazardous Air Pollutants From Coal- and Oil-Fired Electric Utility Steam Generating Units.

APPENDIX A

PPL Martins Creek Baseline Test Report

Full Scale Field Trial of the Low Temperature Mercury Capture Process

U.S. DOE Cooperative Agreement No. DE-FC26-06NT42777

Topical Report No. 1
Baseline Mercury and Sulfur Trioxide Evaluation
Field Testing Conducted December 5 and 6, 2006

CONSOL Energy Inc.
Research & Development
4000 Brownsville Road
South Park, PA

James E. Locke
Manager, Field Testing and Operations
(412) 854-6607
jimlocke@consolenergy.com

and

Brian W. Green
Associate Engineer, Field Testing and Operations
(412) 854-6537
BrianWGreen@consolenergy.com

March 14, 2007

Acknowledgement: “This material is based upon work supported by the Department of Energy under Award Number DE-FC26-06NT42777”

Disclaimer: “This report was prepared as an account of work sponsored by an agency of the United States Government. Neither the United States Government nor any agency thereof, nor any of their employees, makes any warranty, express or implied, or assumes any legal liability or responsibility for the accuracy, completeness, or usefulness of any information, apparatus, product, or process disclosed, or represents that its use would not infringe privately owned rights. Reference herein to any specific commercial product, process, or service by trade name, trademark, manufacturer, or otherwise does not necessarily constitute or imply its endorsement, recommendation, or favoring by the United States Government or any agency thereof. The views and opinions of authors expressed herein do not necessarily state or reflect those of the United States Government or any agency thereof.”

TABLE OF CONTENTS

Section		Page
1.0	Executive Summary	1
2.0	Background	2
3.0	Summary of Test Data	2
3.1	Summary of SO_3 Data	2
3.2	Summary of Process Stream Data	2
3.3	Summary of Hg Speciation Data	3
3.4	Summary of Mercury Removal	4
3.5	Stack Mercury Emissions	4
4.0	Sampling Locations and Sampling Points	5
4.1	Unit 1 ESP Inlet	5
4.2	Unit 5 ESP Outlet	5
5.0	Experimental	5
5.1	Personnel	6
5.2	Test Matrix	6
5.3	Flue Gas Hg Measurements	6
6.0	Flue Gas SO_3 Measurements	9
7.0	Mercury Sampling Test Results	11
8.0	Process Stream Samples	13
8.1	Coal Samples and Results of Analyses	13
8.2	Fly Ash Samples	14
8.3	QA/QC	15
8.4	Blank Samples	16
8.5	NIST SRM Checks	16
8.6	Spike Sample Recoveries	16
8.7	Triplicate Analyses	16
8.8	Flue Gas Hg Concentration Detection Limits	17
8.9	Mass Balance for Mercury	18

LIST OF TABLES

Page

Table 1. Summary of Average Test Results 1
Table 2. Summary of Air Heater Outlet SO_2 and SO_3 Sampling 2
Table 3. Summary of Process Stream Data 3
Table 4. Summary of Unit 1 Mercury Speciation Data 4
Table 5. Summary of Hg Removal 4
Table 6. Heat Input-Based Stack Hg Emissions 5
Table 7. Hg Speciation by Sampling Train Component 7
Table 8. Ontario Hydro Sampling Results 12
Table 9. Coal Sample Results 14
Table 10. ESP Hopper Ash Analyses 15
Table 11. Flue Gas Hg Detection Limits 17
Table 12. Mercury Material Balance Closures 18

FIGURES

Figure 1. Ontario-Hydro Hg Sampling Train 8
Figure 2. Controlled Condensation SO3 Sampling Train 10

LIST OF APPENDICES

APPENDIX A	Field Data Sheets	A-1
APPENDIX B	Analytical Data	B-1
APPENDIX C	Titrations Data	C-1
APPENDIX D	Control Room Data	D-1

LIST OF ABBREVIATIONS

acfm	-	actual cubic feet per minute (wet)
Al_2O_3	-	aluminum oxide
am	-	morning
$BaCl_2$	-	barium chloride
Btu	-	heating value in British thermal units
cfm	-	cubic feet per minute
Ca	-	calcium
CaO	-	calcium oxide
CEM	-	Continuous Emissions Monitoring
CO_2	-	carbon dioxide
CONSOL R&D	-	CONSOL Energy Inc., Research and Development
CVAA	-	cold vapor atomic absorption
DI	-	deionized water
DOE	-	Department of Energy
dscf	-	dry standard cubic feet
dscfm	-	dry standard cubic feet per minute
EPA	-	U.S. Environmental Protection Agency
ESP	-	electrostatic precipitator
FGD	-	flue gas desulphurization
Fe_2O_3	-	iron oxide
ft	-	feet
ft^2	-	square feet
ft^3	-	cubic feet
gm	-	grams
gpm	-	gallons per minute
gr	-	grains
HCl	-	hydrochloric acid
Hg	-	mercury
Hg^{part}	-	mercury in particulate form
Hg^{total}	-	total mercury in particulate, oxidized, and elemental forms
Hg^{++}	-	mercury in oxidized form
Hg^{o}	-	mercury in elemental form
HNO_3	-	nitric acid
H_2O	-	water
H_2O_2	-	hydrogen peroxide
hr	-	hour
in	-	inch
K	-	potassium
K_2O	-	potassium oxide
KCl	-	potassium chloride
$KMnO_4$	-	potassium permanganate
KPPH	-	thousand pound per hour
IPA	-	isopropyl alcohol
L	-	liter
LTMC	-	Low-Temperature Mercury Capture

LSFO	-	limestone forced oxidation
lb	-	pound
lb/TBtu	-	pound per trillion Btu
m	-	meter
m^3	-	cubic meter
Martins Creek	-	PPL Martins Creek Steam Energy Station
mg	-	milligram, 10^{-3} gram
Mg	-	magnesium
$Mg(OH_2)$	-	magnesium hydroxide
min	-	minute
mL	-	milliliter
M	-	molar, mol/L
MM	-	million
mol	-	mole
Na	-	sodium
Na_2O	-	sodium oxide
ng	-	nanogram, 10^{-9} gram
N_2	-	molecular nitrogen
NH_3	-	ammonia
NIST	-	National Institute of Standards and Technology
NO	-	nitric oxide
NO_2	-	nitrogen dioxide
NO_3^-	-	nitrate
O_2	-	molecular oxygen
O_3	-	ozone
P_2O_5	-	phosphorus pentoxide
pm	-	afternoon
PM	-	particulate matter
ppb	-	parts per billion
ppm	-	parts per million
ppmv	-	parts per million by volume
PRSD	-	percent relative standard deviation
QA	-	quality assurance
QC	-	quality control
rpm	-	revolutions per minute
scf	-	standard cubic feet (68°F and 29.92"Hg)
scfm	-	standard cubic feet per minute
SiO_2	-	silicon oxide
SRM	-	Standard Reference Material
SO_2	-	sulfur dioxide
SO_3	-	sulfur trioxide (or sulfite)
SO_4^{2-}	-	sulfate
temp	-	temperature
tph	-	tons per hour
wt	-	weight
V	-	volts

°F	-	temperature in degrees Fahrenheit
~	-	approximately
<	-	less than
>	-	more than
µg	-	microgram, 10^{-6} gram

1.0 Executive Summary

CONSOL Energy Inc., Research and Development (CONSOL R&D) conducted a flue gas mercury (Hg) and sulfur trioxide (SO_3) evaluation at the PPL Martins Creek Steam Energy Station (Martins Creek) on Unit 1 on December 5 and 6, 2006, under Department of Energy (DOE) Award Number DE-FC26-06NT42777. The test program serves as the baseline emissions evaluation for the project and consisted of four sets of simultaneous flue gas mercury measurements at the Unit 1 electrostatic precipitator (ESP) inlet and outlet using the Ontario-Hydro Flue Gas Mercury Speciation Method, and SO_3 measurements at the Unit 1 ESP inlet using the Controlled Condensation Method. Mercury mass balance tests were performed for all tests. The test methods and results are described in this report.

The Unit 1 ductwork splits the boiler flue gas into two streams designated "A" and "B." Mercury and SO_3 sampling was performed on the "A"-side duct at the ESP inlet while only mercury sampling was conducted on "A" and "B" ESP outlet ducts. Boiler coal and ESP ash samples were collected for each test period. The resulting test data provide baseline air heater outlet SO_3 concentrations, baseline total mercury removal, and "A"-side ESP mercury removal. Average "A"-side removal was comparable to the average overall removal; however, the mass balance for test three indicates that the coal samples or the results for that test may not have been representative of the actual mercury input; therefore, the results from that test are reported, but not included in any average mercury value.

The average results for the tests are summarized in Table 1.

Table 1. Summary of Average Test Results

Location / Parameter		ESP Inlet A	ESP Outlet A	ESP Outlet B
SO_3, ppmv @ 0% O_2	Gas Phase	3.4		
	Total Phase	3.6		
	Dew Point, °F	240		
Particle-bound Hg	µg/dscm	4.71	0.003	0.002
	mg/sec	4.03	0.0003	0.0002
Oxidized Hg	µg/dscm	6.99	8.52	7.81
	mg/sec	0.60	0.67	0.65
Elemental Hg	µg/dscm	0.50	1.76	1.88
	mg/sec	0.04	0.14	0.16
Total Hg	µg/dscm	12.2	10.3	9.69
	mg/sec	1.05	0.80	0.81
Duct "A" Hg removal, ESP in-to-ESP out [%]		23.5		
Total Hg removal, coal-to-ESP out [%]		28.0		

Note: Removals calculated on mg/sec basis.

2.0 Background

CONSOL Energy Inc., Research & Development has begun preparatory activities for the Full-Scale Field Trial of the Low-Temperature Mercury Capture (LTMC) Process under U.S. DOE award number DE-FC26-06NT42777. The field trial will be conducted on Unit 1 of PPL's Martins Creek. Unit 1 flue gas splits into two separate flow paths that allows for direct comparison between a controlled stream ("A" Duct) and an uncontrolled stream ("B" Duct). On the "A" Duct, between the air heater outlet and the ESP inlet, lances will be installed to spray a mix of water and magnesium hydroxide ($Mg(OH_2)$), which will reduce flue gas temperatures and neutralize acid gases. Reduced temperatures will allow mercury in the gas stream to bind to native unburned carbon in the fly ash. The goal of the project is to demonstrate >90% mercury removal above baseline during long-term operation on a full scale boiler and maintain ESP performance with the $Mg(OH_2)$ slurry addition. This report summarizes the work performed to establish baseline values for the unit, which will be used in the design of the LTMC process.

3.0 Summary of Test Data

3.1 Summary of SO_3 Data

Flue gas sulfur dioxide (SO_2) and sulfur trioxide (SO_3) concentrations at duct conditions and corrected to 0% O_2 are shown in the following table:

Table 2. Summary of Air Heater Outlet SO_2 and SO_3 Sampling.

Test No	Date & Time	Average Duct O_2, vol %, dry	Concentration, ppmv dry			
			As Sampled		Corrected to 0% O_2	
			SO_2	SO_3	SO_2	SO_3
1	12/5/2006 11:56-12:56	6.90	800	2.20	1200	3.30
2	12/5/2006 14:23-15:23	7.90	720	2.20	1200	3.50
3	12/6/2006 09:35-10:35	8.40	750	2.00	1250	3.40
4	12/6/2006 12:04-13:05	10.1	710	2.10	1370	4.10

3.2 Summary of Process Stream Data

Summarized in Table 3 are the calculated or measured flow rates of the process mercury inputs and outputs, and flue gas mercury output at stack. From the total amount of mercury entering and leaving the system, the mercury material balance closure for each test was calculated.

Table 3. Summary of Process Stream Data

	Test 1	Test 2	Test 3	Test 4	Average
Gross Generation [MW]	103	103	93	92	97.8
Coal Feed Rate [KPPH, calc'd wet basis]	98.1	98.0	92.5	87.6	93.0
Hg in Coal [ppm, dry]	0.206	0.218	0.105	0.126	0.183
Total Hg Input from Coal [lb/hr, dry]	0.019	0.020	0.008	0.010	0.016
ESP Ash, calc'd [KPPH, wet]	11.6	11.9	8.32	8.37	10.6
Hg in ESP Ash [ppm, dry]	0.66	0.80	0.70	0.68	0.71
Total Hg Output via ESP Ash [lb/hr, dry]	0.008	0.009	0.006	0.006	0.008
Total Flue Gas Flow Rate at ESP outlet, measured [m^3/min]	9,580	9,900	9,300	9,490	9,570
Total Hg in Flue Gas at ESP outlet [$\mu g/m^3$]	12.3	11.4	6.88	6.33	10.0
Total Hg Output via ESP outlet [lb/hr]	0.015	0.015	0.008	0.008	0.013
Total Hg Input [lb/hr]	0.019	0.020	0.008	0.010	0.016
Total Hg Output [lb/hr]	0.023	0.024	0.014	0.014	0.020
Hg Closure [%]	119.9	104.5	151.5	128.4	117.6

KPPH = thousand pound per hour

3.3 Summary of Hg Speciation Data

Listed in Table 4 is the mercury speciation at the Unit 1 ESP "A"-side inlet and both ESP outlets, for each of the four tests. The particle-bound mercury was reduced from an average of 4.71 μg/dscm, 39% of the total mercury, to less than 0.002 μg/dscm. The vapor phase oxidized mercury constituted 56% of the ESP inlet mercury. The oxidized fractions of the mercury totaled 95% of the total mercury at the ESP inlet. The elemental mercury concentration increased on the A-side; from an average of 0.50 μg/dscm to an average of 1.76 μg/dscm. The B-side outlet was similar in elemental concentration at 1.88 μg/dscm. The increase in elemental concentration across the ESP is presently unexplainable, though it has happened at many other CONSOL R&D tested units, to varying degrees.

Table 4. Summary of Unit 1 Mercury Speciation Data

Test Number	Location	Mercury Species (μg/dscm)			
		Particulate	Oxidized	Elemental	Total
One	ESP A Inlet	5.67	8.76	0.51	14.9
	ESP A Outlet	0.006	10.8	2.36	13.2
	ESP B Outlet	0.003	9.50	1.90	11.4
Two	ESP A Inlet	4.85	8.09	0.67	13.6
	ESP A Outlet	0.002	9.79	1.59	11.4
	ESP B Outlet	0.002	8.84	2.49	11.3
Three	ESP A Inlet	3.50	5.91	0.35	9.76
	ESP A Outlet	0.002	5.50	1.43	6.93
	ESP B Outlet	0.002	5.70	1.13	6.83
Four	ESP A Inlet	3.61	4.12	0.33	8.06
	ESP A Outlet	0.002	4.99	1.32	6.31
	ESP B Outlet	0.002	5.09	1.24	6.34
Average	ESP A Inlet	4.40	6.72	0.47	11.6
	ESP A Outlet	0.003	7.77	1.67	9.44
	ESP B Outlet	0.002	7.28	1.69	8.98

3.4 Summary of Mercury Removal

The coal-to-ESP Outlet Hg removals for the tests are listed in Table 5.

Table 5. Summary of Hg Removal

Martins Creek Unit 1	Test #1	Test #2	Test #3	Test #4
Coal Hg input [mg/sec]	2.43	2.93	1.18	1.34
Total Hg in flue gas leaving ESP [mg/sec]	1.95	1.87	1.06	1.00
Hg removal, coal-to-ESP Outlets [%]	19.8	36.2	10.2	25.4
Average Hg Removal [%]	28.0			

System mercury removals were determined by comparing the measured coal mercury input to the ESP outlet mercury mass output. The low removal value reported for Test 3 may be the result of an unrepresentative coal sample, as indicated by the low coal mercury input. The low removal may also be attributed to an elevated ESP mercury output value resulting from a memory effect from the higher coal mercury from the previous day.

3.5 Stack Mercury Emissions

Listed in Table 6 are the results of mercury emissions from the stack based on the boiler heat input.

Table 6. Heat Input-Based Stack Hg Emissions

Martins Creek Unit 1	Test # 1	Test # 2	Test # 3	Test # 4
Coal feed rate [KPPH, as fed, calculated]	98.1	98.0	92.5	87.6
Coal feed rate [KPPH, dry, calculated]	91.0	91.1	80.8	81.2
Coal HHV [Btu/Ib, dry basis]	13,420	13,570	13,850	13,820
Total heat input from coal [MM Btu/hr]	1,220	1,240	1,120	1,120
Total Hg emissions [Ib/TBtu]	12.7	12.0	7.6	7.1
Average total Hg emissions [Ib/TBtu]	10.6			

4.0 Sampling Locations and Sampling Points

4.1 Unit 1 ESP Inlet

The ESP inlet sampling location consists of two vertical ducts each measuring 27 feet, 3 inches wide by 3 feet, 5 inches deep and located between the air heater outlet and the ESP inlet. Sixteen sample ports are spaced evenly across each duct. Sampling was conducted, isokinetically, in a center port of duct "A", at a point representing the average flow as determined from the initial velocity traverse. Sulfur trioxide tests were each 60 minutes in duration, using the Controlled Condensation Method. Mercury speciation measurements were conducted for approximately 120 minutes using the Ontario Hydro Flue Gas Mercury Speciation Method (ASTM D6784-02). Due to high particulate loading at this location, runs 2, 3, and 4 were stopped at 110 minutes, 119 minutes, and 107 minutes, respectively, to prevent particulate-bound mercury (Hg^{part}) "breakthrough" (filter breach resulting from high particulate loading).

4.2 Unit 5 ESP Outlet

The ESP outlet sampling location consists of two rectangular ducts each measuring 26 feet, 9-5/8 inches wide by 4 feet deep. Sixteen sampling ports are evenly distributed across each duct. Ontario Hydro sampling was conducted, isokinetically, in the center-most port of both ducts, at a single point for a period of 120 minutes. The port sampled was selected based on average flow within the duct and accessibility for the installation of a mercury continuous emissions monitoring (CEM) probe. Measuring at the approximate CEM sampling point represents an accurate baseline mercury concentration for determining the removal performance of the LTMC System.

5.0 Experimental

This sampling program was performed to establish baseline concentrations for U.S. DOE Cooperative Agreement No. DE-FC26-06NT42777, Full-Scale Field Trial of LTMC Process. Baseline SO_3 levels were examined to evaluate the level of control required

by the water/$Mg(OH_2)$ slurry injection system. Mercury concentrations at the ESP inlet and outlets were measured to determine native removal occurring in the unit and the behavior of mercury species across the ESP. Samples of coal and fly ash were taken during each test period to perform material balances for mercury to verify the Ontario-Hydro results.

5.1 Personnel

CONSOL utilized a six-person crew to complete the field sampling. Mr. Dick Silfies of PPL Martins Creek provided sampling and process oversight.

5.2 Test Matrix

The sampling consisted of a total of twelve mercury and four SO_3 tests over two sampling days. Two mercury measurements were performed at each of the three Unit 1 sampling locations, and two SO_3 measurements were performed at the Duct "A" ESP inlet, on each of the two sampling days. Mercury measurements were conducted, isokinetically, at the individual site locations simultaneously. Sulfur trioxide measurements at the ESP inlet were conducted independently of the mercury tests.

Preliminary pitot surveys were conducted at each location prior to Test 1. At all measurement locations, the flows were found to be in-line with the vertical axis of the duct. Mercury measurements were conducted with the sampling nozzle oriented directly into the flow.

5.3 Flue Gas Hg Measurements

Flue gas Hg measurements were obtained using the Ontario-Hydro mercury speciation method.[1] The Ontario Hydro sampling train schematic is shown in Figure 1.

In the Ontario-Hydro method, gas is extracted isokinetically from the flue gas stream through a heated glass-lined probe and quartz filter. Total particulate matter mass loading is calculated from the solids collected in the probe and filter. Probe and filter temperatures are maintained at 250 °F ±20 °F, or as close as practical to the flue gas temperature if the flue gas temperature is higher than 250 °F. Mercury collected in the probe and filter is assumed to be particle-bound mercury (Hg^{part}).

The flue gas exits the quartz filter and passes through a series of chilled impingers. The first three impingers are filled with 100 mL of a 1M-potassium chloride (KCl) solution. Mercury captured in these impingers is reported as oxidized mercury (Hg^{++}). The next impinger is filled with 100 mL of 5% nitric acid and 10% hydrogen peroxide (H_2O_2) solution to remove SO_2 from the flue gas and preserve the oxidizing strength of the subsequent two impingers, which are filled with 100 mL of an acidic potassium permanganate ($KMnO_4$) solution. Mercury captured in the nitric acid impinger and the potassium permanganate impingers is reported as elemental mercury (Hg^0). The gas

[1] ASTM D6784-02, Standard Test Method for Elemental, Oxidized, Particle-Bound and Total Mercury in Flue Gas Generated from Coal-Fired Stationary Sources (Ontario Hydro Method)

exits the impinger train through a silica gel-filled impinger that removes uncondensed moisture from the sample gas. The sampling train design results in the following species collection Hg sequence:

Table 7. Hg Speciation by Sampling Train Component

Sampling Train Component	Species Measured
Probe & Nozzle Rinse	Hg^{part}
Quartz Filter	Hg^{part}
KCl Impingers	Hg^{++}
HNO_3/H_2O_2 Impinger	Hg^0
$KMnO_4$ Impingers	Hg^0
HCl Rinse of $KMnO_4$ Impingers	Hg^0

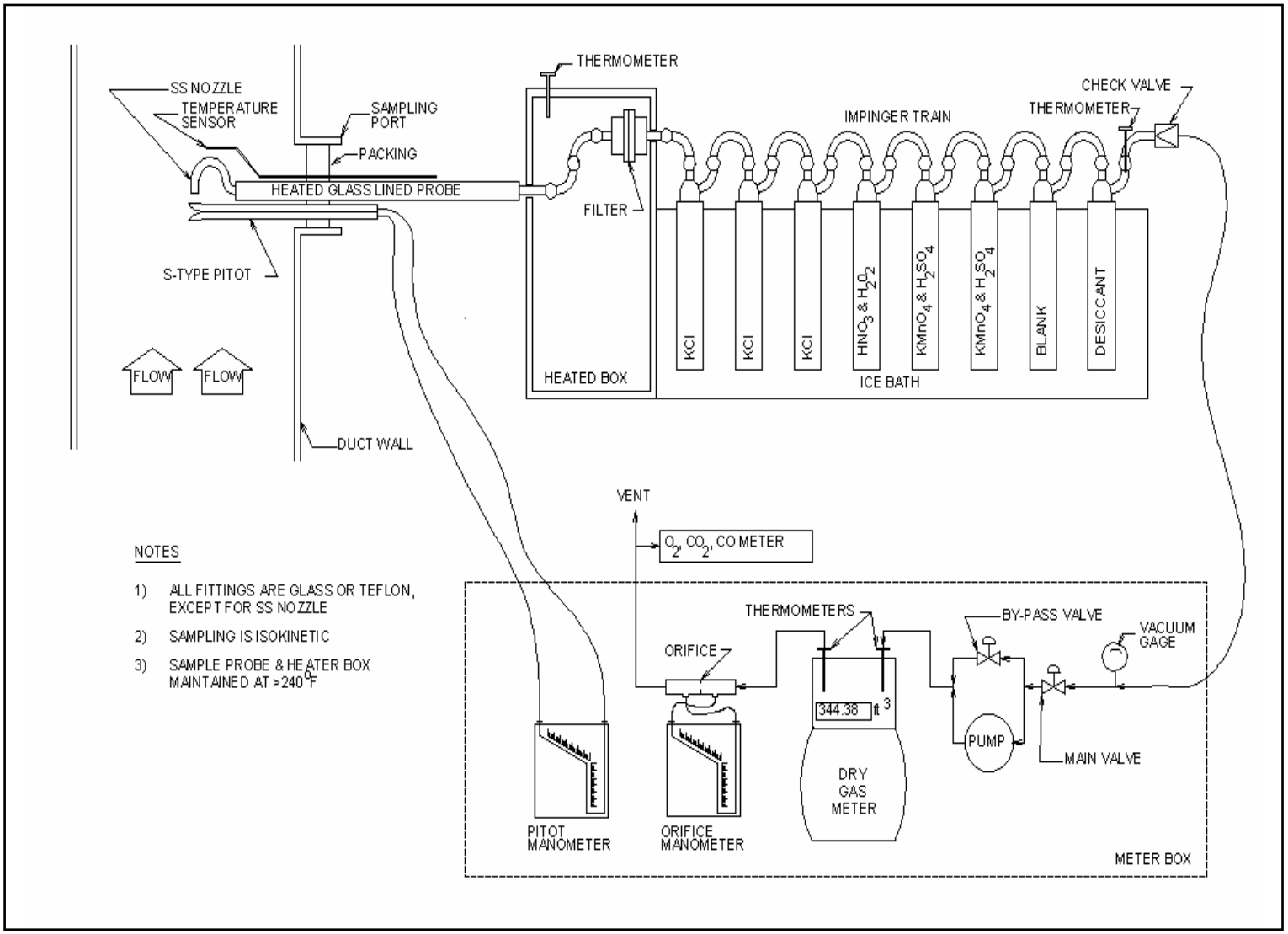

Figure 1. Ontario-Hydro Hg Sampling Train

Sampling at the inlet was performed using a sampling train configured with an in-stack quartz thimble filter contained within a stainless steel holder, attached to the end of a glass-lined probe. At these locations the probe rinse is assumed to be Hg^{++}.

The absorbing solutions were made fresh daily. The impingers were charged and the sampling components were transported to the required locations. The sampling trains were assembled, pre-heated, and checked for leaks. After passing the leak-check procedure, the sampling probes were inserted into their respective ducts and sampling was initiated. Isokinetic samples were obtained simultaneously at each location. The sample period was 120 minutes at the outlet locations and between 107 and 120 minutes at the inlet location. Sample volumes ranged from 47.5 to 70.5 dscf at the inlet location, and 77.0 to 88.2 dscf at the outlet locations. Oxygen readings were monitored at the outlet of the sampling trains using a Teledyne Model Max 5 portable analyzer (electrochemical O_2 sensor). At the completion of the sampling period, the sample trains were checked for leaks, purged for ten minutes, and then disassembled. The components were transported to the lab trailer for recovery. The mercury concentration of the individual impinger solutions was determined by cold vapor atomic absorption (CVAA) as specified in the methodology. The concentration of Hg on the solids was determined by acid digestion followed by CVAA (Method ASTM D6414).

The amount of mercury collected in the impinger solutions was determined as outlined in EPA Method 29 and the Ontario-Hydro Method. An aliquot of the impinger solution is acidified and the mercury is determined using cold vapor-atomic absorption spectroscopy. The atomic absorption spectrometer is calibrated with commercial mercury standards. The calibration is verified using NIST Standard 1633B. The calibration is reassessed periodically by analyzing a quality control standard. The instrument is recalibrated as required. Each sample matrix is analyzed as a set and an individual calibration curve is used for each set. Depending on sample type, selected samples are spiked with 2 or 10 ng/mL (ppb) of mercury and reanalyzed. Spike recovery must be within ±30% or the sample is diluted and reanalyzed. Selected samples are analyzed in duplicate. The duplicates must be within ±20% or the analyses are repeated.

Where sufficient solids are collected, particulate mercury is analyzed using a 0.5-1.0 gm sample of solids removed from the filter. In cases where the particulate catch is low the entire filter is digested. The samples are digested with aqua-regia in pressure vessels prior to analysis by CVAA.

6.0 Flue Gas SO_3 Measurements

Flue gas SO_2 and SO_3 concentrations were determined using a controlled condensation method originally developed by the US EPA and modified by CONSOL R&D. A drawing of the CONSOL sampling train is shown in Figure 2.

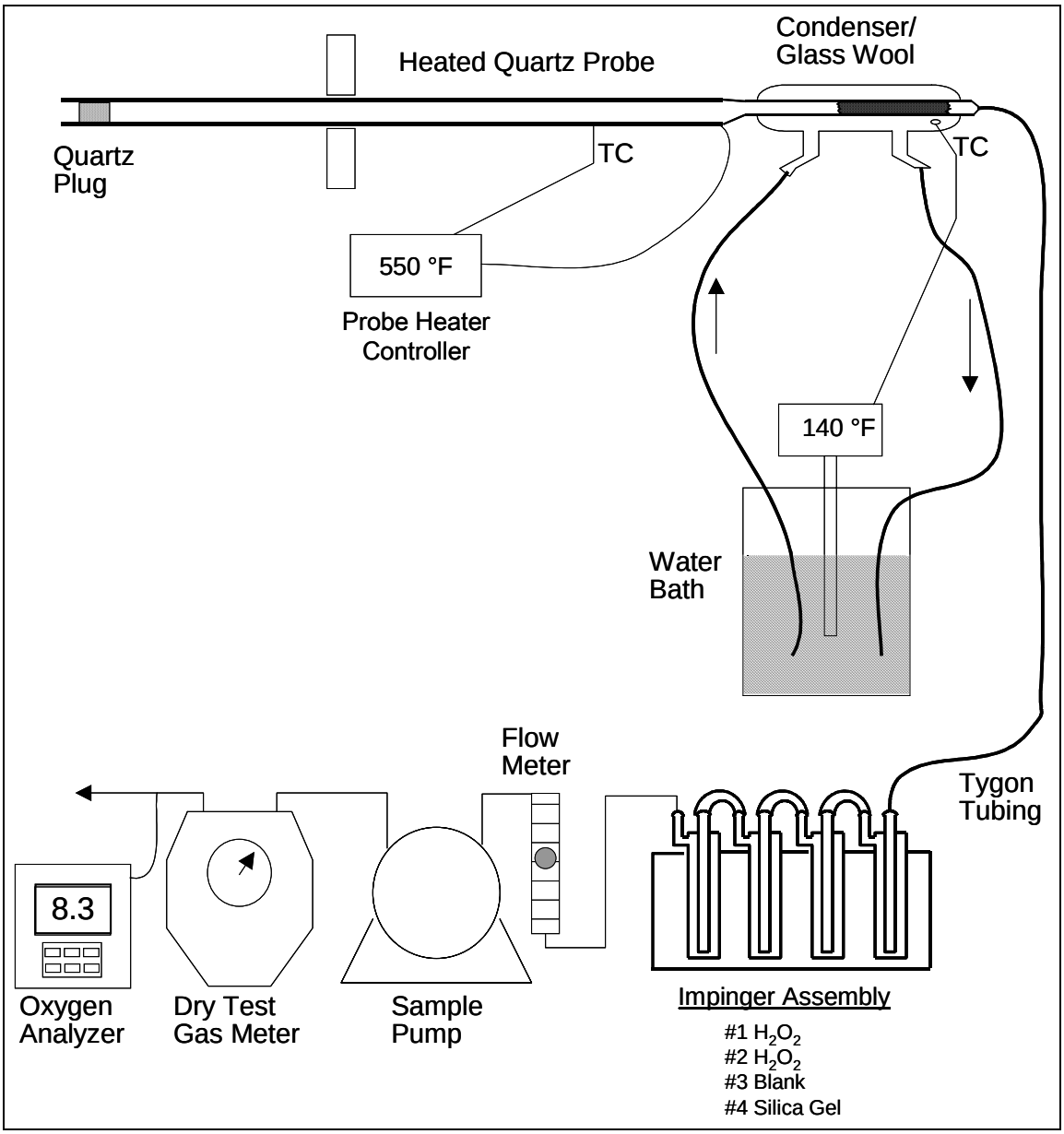

Figure 2. Controlled Condensation SO3 Sampling Train

Flue gas was pulled through a temperature-controlled, quartz-lined probe fitted with a quartz wool plug to remove particulate matter. The probe temperature was maintained at ca. 550 °F to minimize SO_3 condensation and SO_2 oxidation. After the filter, the gas sample passed through a water-cooled condenser that is loosely packed with glass wool. A heated water bath was used to control the condenser temperature at 140 °F, which is below the acid dew point. Essentially, all of the SO_3 condenses. However, the condenser temperature was above the water dew point to prevent water condensation. The sample gas exited the condenser and entered a bank of miniature impingers. The first two impingers contained a 3% H_2O_2 solution, which captures the SO_2. The gas next passed through an empty impinger, and finally a silica gel-filled impinger for moisture

removal. The gas was then conveyed through a rotameter, a vacuum pump, and a dry test meter.

Prior to the sampling, the system was leak checked under a vacuum of 10" of Hg. The sample probe was then positioned and gas was sampled for 60 minutes. The following data was recorded: (1) starting gas volume, (2) interval gas volume, (3) final gas volume, (4) probe temperature, (5) condenser temperature, (6) water bath temperature, (7) flue gas duct temperature, (8) dry test meter temperature, (9) flow meter setting, (10) system vacuum, (11) exit gas O_2 concentration, (12) barometric pressure, and (13) sampling time.

After sampling, the probe was removed from the stack, leak checked under a vacuum of 10" of Hg, purged with ambient air for 10 minutes, and the train components were disassembled for sample recovery. The sample train components were recovered in the following manner:

Quartz Plug - The quartz plug was removed from the probe tip, placed in a glass bottle, and extracted with 20 mL of isopropyl alcohol (IPA). The solids were filtered and the filtrate was diluted to a volume of 50 mL prior to analyses.

Sample Probe - The quartz probe liner was rinsed with IPA into a glass bottle and diluted to a volume of 50 mL prior to analysis.

Condenser - The condenser interior is rinsed with IPA into a glass bottle. Three complete rinses are utilized. The rinses are diluted to a volume of 50 mL prior to analysis.

Impingers - The contents of the first three impingers and connecting tubes are rinsed into a collection bottle with deionized (DI) water and diluted to a volume of 250 mL prior to analysis.

Each of the samples listed above was analyzed by a barium chloride ($BaCl_2$) titration to a thorin endpoint as described in EPA Method 6. A blank 3% H_2O_2 solution and a blank IPA sample were titrated with the same $BaCl_2$ titrant for comparison. The quartz plug contains SO_3 that was absorbed onto the solid particles prior to collection in the sampling train. The gas phase SO_3 value is the sum of the probe and condenser washes. The impingers collect the SO_2 fraction. The SO_2 and SO_3 values will be reported in ppmv at duct conditions and at 0% oxygen.

7.0 Mercury Sampling Test Results

Table 8 lists the Ontario Hydro sampling results for Unit 1. A complete listing of the sampling parameters and field data sheets is in Appendix A.

Table 8. Ontario Hydro Sampling Results

Location	ESP A Inlet	ESP A Outlet	ESP B Outlet	ESP A Inlet	ESP A Outlet	ESP B Outlet
Test	1	1	1	2	2	2
Date	12/5/2006	12/5/2006	12/5/2006	12/5/2006	12/5/2006	12/5/2006
Start Time	920	920	925	1238	1240	1245
End Time	1130	1120	1125	1445	1440	1445
Sampling Time [min]	120	120	120	110	120	120
Sample Volume [dscf]	70.5	78.1	77.7	68.4	83.6	79.5
Barometric Pressure [“ Hg]	29.9	29.9	29.9	29.9	29.9	29.9
Static Pressure [“ H_2O]	-5.55	-6.21	-6.39	-5.75	-6.33	-6.39
O_2, measured [%]	6.90	8.60	9.10	7.90	8.90	9.40
CO_2, calculated [%]	13.3	11.7	11.3	12.4	11.4	10.9
Flue Gas Temperature [°F]	272	273	286	265	273	286
Gas Velocity [ft/sec]	47.2	38.1	41.3	48.2	39.3	42.1
Gas Flow Rate [dscfm]	182,200	162,700	175,500	189,800	169,900	179,900
Particulate Matter [gr/dscf]	3.72	0.065	0.065	3.65	0.059	0.064
Particle-bound Hg [$\mu g/m^3$]	5.67	0.006	0.003	4.85	0.002	0.002
Oxidized Hg [$\mu g/m^3$]	8.76	10.79	9.50	8.09	9.79	8.84
Elemental Hg [$\mu g/m^3$]	0.51	2.36	1.90	0.67	1.59	2.49
Total Hg [$\mu g/m^3$]	14.9	13.2	11.4	13.6	11.4	11.3
Hg Emissions [lb/TBtu]	13.3	13.4	12.1	13.0	11.8	12.3

Table 8 continued. Ontario Hydro Sampling Results

Location	ESP A Inlet	ESP A Outlet	ESP B Outlet	ESP A Inlet	ESP A Outlet	ESP B Outlet
Test	3	3	3	4	4	4
Date	12/6/2006	12/6/2006	12/6/2006	12/6/2006	12/6/2006	12/6/2006
Start Time	850	855	900	1154	1155	1200
End Time	1049	1055	1100	1301	1355	1400
Sampling Time [min]	119	120	120	1070	120	120
Sample Volume [dscf]	70.5	78.1	77.7	68.4	83.6	79.5
Barometric Pressure [“ Hg]	30.0	30.0	30.0	29.9	29.9	29.9
Static Pressure [“ H_2O]	-5.70	-6.25	-6.40	-5.56	-5.84	-6.09
O_2, measured [%]	8.40	9.30	10.1	11.7	10.6	10.4
CO_2, calculated [%]	11.9	11.0	10.3	11.7	10.6	10.4
Flue Gas Temperature [°F]	265	271	286	271	272	283
Gas Velocity [ft/sec]	43.7	38.0	38.6	43.8	37.4	40.5
Gas Flow Rate [dscfm]	169,100	163,400	164,800	169,300	161,700	173,400
Particulate Matter [gr/dscf]	2.69	0.057	0.067	2.81	0.059	0.065
Particle-bound Hg [$\mu g/m^3$]	3.50	0.002	0.002	3.61	0.002	0.002
Oxidized Hg [$\mu g/m^3$]	5.91	5.50	5.70	4.12	4.99	5.09
Elemental Hg [$\mu g/m^3$]	0.35	1.43	1.13	0.33	1.32	1.24
Total Hg [$\mu g/m^3$]	9.76	6.93	6.83	8.06	6.31	6.34
Hg Emissions [lb/TBtu]	9.60	7.35	7.78	8.13	6.94	7.21

8.0 Process Stream Samples

Coal and fly ash samples were taken during each test.

8.1 Coal Samples and Results of Analyses

Martins Creek operations personnel collected coal samples from the mill feeders during each flue gas sampling period. Each coal sample was stored and sealed in a 5-gallon plastic bucket. Total coal mercury input was determined by applying the coal mercury concentration to the calculated coal feed flow, which was derived from F-Factor calculations. Full analytical results are contained in Appendix B.

Table 9. Coal Sample Results

Sample ID	Coal 1	Coal 2	Coal 3	Coal 4
Test No.	1	2	3	4
Test Date	12/5/2006	12/5/2006	12/6/2006	12/6/2006
Sample Location	Mill Feeders	Mill Feeders	Mill Feeders	Mill Feeders
Analytical No.	20065911	20065912	20065913	20065914
Total Moisture (%)	7.24	6.99	12.68	7.42
Moisture (%, as det'd)	1.59	2.02	1.77	1.57
Ash (%, dry)	10.6	10.5	7.95	8.22
Volatile Matter (%, dry)	33.7	33.8	36.2	35.9
Fixed Carbon (dry, %)	55.7	55.7	55.8	55.9
HHV (Btu/lb, dry)	13,423	13,570	13,849	13,820
Total Sulfur (%, dry)	2.00	2.02	1.66	1.76
Total Carbon (%, dry)	75.5	76.1	77.5	77.4
Hydrogen (%, dry)	4.08	4.11	3.97	3.99
Nitrogen (%, dry)	1.24	1.24	1.24	1.28
Oxygen (%, dry, by diff.)	6.44	5.96	7.65	7.23
Chlorine (%, dry)	0.094	0.106	0.080	0.093
Mercury (ppm, dry)	0.212	0.255	0.116	0.131
Major Ash Element (%, dry)				
SiO_2	49.1	49	49.5	48.9
Al_2O_3	23.8	23.6	24.1	24.1
TiO_2	1.07	1.06	1.07	1.05
Fe_2O_3	17.8	18.3	16.7	18.3
CaO	1.65	1.64	2.12	1.86
MgO	0.79	0.79	0.84	0.83
Na_2O	0.37	0.35	0.52	0.50
K_2O	2.27	2.19	1.96	2.02
P_2O_5	0.5	0.51	0.49	0.50
SO_3	1.35	1.46	1.72	1.48

8.2 Fly Ash Samples

Samples of the fly ash were collected from the ESP Hopper Discharge on the Unit 1 ESP. Table 10 summarizes the results of the fly ash analyses for tests 1 – 4.

Table 10. ESP Hopper Ash Analyses

Sample ID	ASH 1	ASH 2	ASH 3	ASH 3
Test No.	1	2	3	4
Test Date	12/5/2006	12/5/2006	12/6/2006	12/6/2006
Sample Location	Hopper Discharge	Hopper Discharge	Hopper Discharge	Hopper Discharge
Analytical No.	20065915	20065916	20065917	20065918
Moisture (%, as det'd)	0.03	0.16	0.26	0.36
Ash (%, dry)	81.8	79.2	75.8	78.3
Total Sulfur (%, dry)	0.38	0.48	0.46	0.43
Total Carbon (%, dry)	16.3	18.6	23.2	20.9
Chlorine (%, dry)	0.003	0.003	0.003	0.005
Mercury (ppm, dry)	0.66	0.80	0.70	0.68
Major Ash Element (%, dry)				
SiO_2	39.8	38.4	37.1	37.5
Al_2O_3	19.6	19.6	17.9	18.3
TiO_2	0.93	0.94	0.82	0.85
Fe_2O_3	14.4	12.8	14.0	13.5
CaO	1.72	1.75	1.79	1.78
MgO	0.7	0.71	0.65	0.66
Na_2O	0.32	0.36	0.41	0.39
K_2O	1.65	1.81	1.53	1.56
P_2O_5	0.46	0.50	0.40	0.41
SO_3	0.81	0.99	0.86	0.96

8.3 QA/QC

The sampling and analysis QA/QC procedures are described below.

- All sampling was conducted by personnel specifically trained and experienced in power plant sampling methods, including the Ontario-Hydro mercury sampling method and the controlled condensation method,
- The sampling equipment was maintained and calibrated as required,
- Consistent sample preparation and recovery procedures were used,
- Samples were logged and tracked under the direction of sample team leader,
- Individual calibration curves were developed for each sample matrix,
- NIST Standard Reference Material (SRM) and lab QC samples were analyzed to verify calibration curves,
- Duplicates of selected samples were analyzed to assure repeatability,
- Analyses of selected “spiked” samples were analyzed to assure sample recovery, and
- Interim data were reviewed to assure sample completeness.

All samples were obtained using the procedures described in EPA Method 5/17 and Ontario-Hydro Mercury Speciation method. Data were recorded on standard forms, which are included in Appendix A. The field data were reduced using standard spreadsheets. Copies of the summary sheets are included in Appendix A. To assure consistency, all of the Ontario-Hydro train components were prepared and recovered under the supervision of a senior technician experienced in the Ontario-Hydro mercury speciation lab techniques. Copies of the recovery sheets are included in Appendix C.

The Ontario-Hydro sampling train analysis consisted of seven sub-samples. Each sub-sample analysis consisted of developing a calibration curve (absorbance versus mercury concentration in solution), checks of field and lab blanks, calibration checks with SRM and lab standards, selected duplicates and selected sample spikes. The laboratory summaries for each of these runs are contained in Appendix C.

A total of 64 liquid and 14 solid individual mercury determinations were completed, all liquid samples were analyzed in duplicate. In addition, 12 blank samples with duplicate analysis, 1 NIST SRM or lab QC checks, 12 sample spikes, 3 spiked duplicates, and 12 triplicate analyses were performed.

8.4 Blank Samples

A total of 10 blank liquid samples were analyzed. The average blank value was <0.60 ng/mL (ppb in solution). The average blank value is less than any individual Hg^{part}, Hg^{++}, or Hg^{0} determination in ng/mL. Consequently, in this report, blank concentrations were not subtracted out from any mercury determination.

8.5 NIST SRM Checks

NIST SRM checks were conducted periodically throughout the mercury determinations.

The SRM checks were conducted using NIST SRM #1633B with a defined mercury concentration of 0.141 ng/mL.

8.6 Spike Sample Recoveries

A total of 15 samples were spiked with a 2 or 5 ppb Hg standard and then re-analyzed to determine the percent spike recovery. The result of this QA/QC procedure was an average spike recovery of 103% recovery with a ±4.43% standard deviation.

8.7 Triplicate Analyses

A total of 12 triplicate analyses were conducted periodically throughout the mercury determinations. The result of this QA/QC procedure was an average mercury determination that was within 1.0% of the original mercury determination, with a ±0.01% standard deviation.

8.8 Flue Gas Hg Concentration Detection Limits

For liquid samples, the flue gas mercury concentration was calculated using the following equation:

$$Hg\,(\mu g / m^3) = \frac{C_{imp} \times V_{imp}}{V_{gas} \times 1000}$$

where: C_{imp} = *Hg concentration of impinger solution [ng/mL (ppb)]*

V_{imp} = *Liquid volume of impinger solution [mL]*

V_{gas} = *Flue gas sample volume [dry standard m^3]*

1000 = *Conversion factor [1000 ng per µg]*

The flue gas mercury detection limit is reduced when the flue gas sample volume is increased or liquid volume of impinger solution is decreased. The CVAA is calibrated between 0 and 20 ng/mL. Over this range, the calibration curve between absorbance and concentration is linear. The lowest concentration standard used to develop the calibration curve is 0.500 ng/mL. In addition, the detection limit of the liquid CVAA analysis was 0.2 ng/mL for KCl and $KMnO_4$ impinger solutions and <1.0 ng/mL for all other solutions. The prescribed sampling and recovery procedures result in final liquid volumes varying between 63 and 636 mL. The volume of flue gas collected varied between 1.35 and 2.50 dscm. The sampling variables result in sample-specific flue gas detection limits. The flue gas mercury detection limits for each sample matrix are listed in Table 11.

Table 11. Flue Gas Hg Detection Limits

Matrix	Maximum Liquid Volume [mL]	Minimum Gas Volume [dscm]	Flue Gas Detection Limit [µg/m^3]
Probe Rinse	178	1.35	0.13
Heated Line Rinse	110	1.35	0.08
KCl Impinger	636	1.35	0.47
HNO_3/H_2O_2 Impingers	185	1.35	0.14
$KMnO_4$ Impingers	255	1.35	0.19

Depending on the matrix, the flue gas mercury detection limit ranged from 0.08-0.47 µg/m^3. When compared with the total mercury concentrations ranging from 6.94-13.38 µg/m^3, the flue gas detection limit is low enough to be insignificant in the flue gas calculations.

8.9 Mass Balance for Mercury

One important criterion to gauge the overall quality of the tests is to conduct a mass balance to account for the mercury entering and leaving the plant during the time of the tests. Mercury entered the plant through coal, and left the plant via ESP ash and stack emissions. The coal feed rates were determined with F-Factor calculations, which are based on coal composition and heating value. The amount of mercury leaving the stack was calculated from the Ontario-Hydro data. The ESP fly ash mass rates were calculated from coal ash rates and estimated ESP control efficiencies.

With all of the flow rates of the stream entering and leaving Unit 1 defined, the amount of mercury in the streams entering and leaving the unit was calculated. A material balance check for mercury was performed and the results are summarized in Table 12. The mercury mass balance closure is defined as the sum of the amounts of mercury in the streams leaving the system divided by the sum of the amounts of mercury in the streams entering the system. The mercury balances for tests 1, 2, and 4 met the QA/QC criterion of 100±30% mercury balance closure. Coal samples from the second day of testing contained nearly half the mercury as measured in the coal from the first day. Other coal chemistry components also differ between the two days leading to the conclusion that a fuel switch occurred some time between the second and third test periods. As such, the high balance for test three could be the result of improper coal sampling or even a residual effect on the concentration due to carry-over of mercury from the previous fuel.

Table 12. Mercury Material Balance Closures

Test No.	1	2	3	4
Hg input from Coal (mg/sec)	2.43	2.93	1.18	1.34
Total Hg Input (mg/sec)	2.43	2.93	1.18	1.34
Hg output via ESP hopper ash (mg/sec)	0.96	1.19	0.73	0.72
Hg output via stack flue gas (mg/sec)	1.95	1.87	1.06	1.00
Total Hg Output (mg/sec)	2.91	3.06	1.79	1.72
Hg material balance closure (output / input)	119.9%	104.5%	151.5%	128.4%
Average Hg material balance closure	117.6%			

APPENDIX A

Field Data Sheets

ONTARIO HYDRO Hg SAMPLING AND SPECIATION FIELD DATA SHEET

Page 1 of 1

TEST ID	Inlet-1	METER BOX	N-2	CAL. DATA: delta H	1.979	Comments:	stop to change filter @ 58 min stop volume 744.487 → Leak V : good restart 744.626
PLANT	PPL Martins Creek	PITOT TUBE DESC	E-5	Y	0.977		
LOCATION	Air Heater Outlet	PROBE LENGTH [ft]	3	C(p)	0.821		
DATE	12/5/06	NOZZLE ID [inch]	1/4" D = 0.248	FILTER BOX SETTING	XXX		
OPERATOR(S)	RS + BG	%H_2O (Assumed)	10	PROBE HTR SETTING	325		
AMBIENT TEMP [°F]	34	FILTER ID	17+18	DUCT X-SECTION	circ ?	rect ?	other:
BAR. PRESS. [" Hg]	29.88	K FACTOR	2.51	DUCT DIMENSIONS		DUCT AREA	

TRAVERSE POINT [port-inch]	CLOCK TIME (24-hr)	SAMPLE TIME [minute]	STATIC PRES [" H_2O]	PITOT HEAD [" H_2O]	METER DIFF PRESSURE [" H_2O]	METER VACUUM [" Hg]	METER READING [ft^3]	METER TEMP [oF] inlet	METER TEMP [oF] outlet	STACK TEMP [°F]	PROBE TEMP [°F]	~~FILTER BOX~~ LINE [°F]	LAST IMP TEMP [°F]	METER EXHAUST O_2 [% vol]	METER EXHAUST CO_2 [% vol]
	0920	0					712.632								
G-21"		10	-5.5	0.54	1.43	4	718.5	35	34	271	320	295	34	7.4	12.8
		20		0.53	1.3	5	723.9	40	36	272	320	296	35	6.6	13.6
		30		0.54	1.43	7	729.3	42	36	271	319	295	37	6.4	13.8
		40	-5.5	0.54	1.43	8	735.0	43	37	271	318	295	38		
		50		0.54	1.3	11	740.6	44	39	271	319	295	38		
		60		0.54	1.3	15	744.7/746.2	42	38	271	297	287	38		
		70	-5.6	0.55	1.4	4	751.7	42	39	273	320	294	39	6.8	13.4
		80		0.54	1.3	5	757.43	45	40	276	320	295	39		
		90		0.55	1.4	7	763.0	46	40	273	320	294	38		
		100		0.55	1.4	8	768.6	46	40	273	320	295	38		
		110		0.54	1.3	8	774.1	46	40	273	320	295	38		
		120	-5.6	0.54	1.3	12	779.344	43	41	274	310	275	38	7.1	13.1
AVERAGE		120	-5.55	0.542	1.325		66.573	40.58		272.4				6.86	13.34

Sample Train Leak Checks: Pre Test 0.001 ft^3 @ 10 in. Hg; Post Test 0.002 ft^3 @ 15 in. Hg

Pitot Tube Leak Checks: PreTest ✓ @ 6 in. H_2O; Post Test ✓ @ 6 in. H_2O

CONSOL ENERGY

NOTE: Purge for 10 minutes at end of sampling.

ONTARIO HYDRO Hg SAMPLING AND SPECIATION FIELD DATA SHEET

TEST ID	DUTA-1	METER BOX	N-5	CAL. DATA: delta H	1.951
PLANT	PPL Martins Creek	PITOT TUBE DESC	E-13	Y	1.010
LOCATION	ESP Outlet A	PROBE LENGTH [ft]	5	C(p)	0.834
DATE	12-5-06	NOZZLE ID [inch]	5/16-B 0.314	FILTER BOX SETTING	~~325~~ 275
OPERATOR(S)	KC, RO, BS	%H_2O (Assumed)	~~8~~ 10	PROBE HTR SETTING	~~325~~ 275
AMBIENT TEMP [°F]	~34°	FILTER ID	24	DUCT X-SECTION	circ ? / rect ? / other:
BAR. PRESS. [" Hg]	29.88	K FACTOR	5.98	DUCT DIMENSIONS / DUCT AREA	

Comments:

TRAVERSE POINT [port-inch]	CLOCK TIME (24-hr)	SAMPLE TIME [minute]	STATIC PRES [" H_2O]	PITOT HEAD [" H_2O]	METER DIFF PRESSURE [" H_2O]	METER VACUUM [" Hg]	METER READING [ft^3]	METER TEMP [oF] inlet	METER TEMP [oF] outlet	STACK TEMP [°F]	PROBE TEMP [°F]	FILTER BOX [°F]	LAST IMP TEMP [°F]	METER EXHAUST O_2 [% vol]	METER EXHAUST CO_2 [% vol]
	0920	0					990.38								
1-24"		10		0.35	2.10	5	996.23	42	44	273	274	278	38	—	—
		20		.34	2.05	5	002.30	48	46	273	275	277	40	8.3	11.9
		30		.34	2.05	5	008.44	51	47	273	275	275	43	—	—
		40		.34	2.05	5	014.65	52	48	273	275	275	44	8.5	11.8
		50		.35	2.10	5	021.02	53	48	273	276	276	46	—	—
		60		.33	1.98	5	027.20	54	49	273	275	275	47	8.6	11.7
		70		.33	1.98	5	033.39	55	50	273	276	275	48	—	—
		80		.33	1.98	5	039.60	57	52	273	275	275	49	8.9	11.4
		90		.33	1.98	5	045.89	58	52	273	273	275	48	—	—
		100		.33	1.98	5	052.21	58	53	273	275	275	47	8.6	11.7
		110		.34	2.05	5	058.64	60	54	273	275	275	47	—	—
		120		.33	1.98	5	065.02	60	54	273	276	275	47	8.7	11.5
	1120														
								10 min purge after test							
				RMS											
AVERAGE		120	-6.21	0.339	2.023		74.72	51.70		273				8.60	11.67

Sample Train Leak Checks: Pre Test OK ft^3 @ 15 in. Hg; Post Test OK ft^3 @ 10 in. Hg

Pitot Tube Leak Checks: PreTest OK @ 8 in. H_2O; Post Test OK @ 7 in. H_2O

NOTE: Purge for 10 minutes at end of sampling.

CONSOL ENERGY

ONTARIO HYDRO Hg SAMPLING AND SPECIATION FIELD DATA SHEET

Page _____ of _____

TEST ID	Out B-1	METER BOX	N-4	CAL. DATA: delta H	1.853	Comments:	
PLANT	PPL Martins Creek	PITOT TUBE DESC	E-6	Y	0.985		
LOCATION	ESP Outlet B	PROBE LENGTH [ft]	5	C(p)	0.826		
DATE	12-5-06	NOZZLE ID [inch]	9/32 A = 0.276	FILTER BOX SETTING	~~325~~ 275		
OPERATOR(S)	KC, RO, BS	%H_2O (Assumed)	~10	PROBE HTR SETTING	~~325~~ 275		
AMBIENT TEMP [°F]	~34°	FILTER ID	25	DUCT X-SECTION	circ ?	rect ?	other:
BAR. PRESS. [" Hg]	29.88	K FACTOR	3.62	DUCT DIMENSIONS		DUCT AREA	

TRAVERSE POINT [port-inch]	CLOCK TIME (24-hr)	SAMPLE TIME [minute]	STATIC PRES [" H_2O]	PITOT HEAD [" H_2O]	METER DIFF PRESSURE [" H_2O]	METER VACUUM [" Hg]	METER READING [ft^3]	METER TEMP [oF] inlet	METER TEMP [oF] outlet	STACK TEMP [°F]	PROBE TEMP [°F]	FILTER BOX [°F]	LAST IMP TEMP [°F]	METER EXHAUST O_2 [% vol]	METER EXHAUST CO_2 [% vol]
	0925	0					148.20								
1-24"		10		0.40	1.43	4	154.52	44	37	286	263	276	38	—	—
		20		.39	1.40	4	160.74	47	38	287	260	275	39	9.1	11.2
		30		.39	1.40	4	166.95	51	40	285	262	275	41	—	—
		40		.41	1.48	4	173.38	52	42	285	265	275	42	9.2	11.1
		50		.40	1.43	4	179.67	54	43	285	275	275	43	—	—
		60		.39	1.40	4	185.94	55	45	285	275	275	44	9.1	11.2
		70		.41	1.48	4	192.40	57	46	285	266	275	46	—	—
		80		.40	1.43	4	198.76	57	47	286	267	275	47	8.9	11.4
		90		.40	1.43	4	205.08	57	47	286	266	275	47	—	—
		100		.39	1.40	4	211.38	58	49	286	265	275	48	9.0	11.3
		110		.40	1.43	4	217.77	58	49	286	270	275	47	—	—
		120		.40	1.43	4	224.16	58	49	285	265	275	47	9.0	11.3
	1125														
							10 minute purge after test								
				RMS											
AVERAGE		120	-6.39	0.398	1.428		75.96	(49.2)		285.6				9.05	11.25

Sample Train Pre Test OK ft^3 @ 15 in. Hg
Leak Checks: Post Test OK ft^3 @ 10 in. Hg

Pitot Tube PreTest OK @ 8 in. H_2O
Leak Checks: Post Test OK @ 7 in. H_2O

CONSOL ENERGY.

NOTE: Purge for 10 minutes at end of sampling.

ONTARIO HYDRO Hg SAMPLING AND SPECIATION FIELD DATA SHEET

Page ____ of ____

TEST ID	INLET-2	METER BOX	N-2	CAL. DATA: delta H	1.979	Comments:	Stop @ 50 min 814.083
PLANT	PPL Martins Creek	PITOT TUBE DESC	E5	Y	0.977		Leak ✓ : good
LOCATION	Air Heater Outlet	PROBE LENGTH [ft]	3	C(p)	0.821		Restart 815.746
DATE	12/5/06	NOZZLE ID [inch]	1/4"D = 0.248	FILTER BOX SETTING	XXX		Change filter @ +60 min
OPERATOR(S)	RS + BG	%H_2O (Assumed)	8	PROBE HTR SETTING	325		
AMBIENT TEMP [°F]	36	FILTER ID	19	DUCT X-SECTION	circ ?	rect ?	other:
BAR. PRESS. [" Hg]	29.88	K FACTOR	2.51	DUCT DIMENSIONS		DUCT AREA	

TRAVERSE POINT [port-inch]	CLOCK TIME (24-hr)	SAMPLE TIME [minute]	STATIC PRES [" H_2O]	PITOT HEAD [" H_2O]	METER DIFF PRESSURE [" H_2O]	METER VACUUM [" Hg]	METER READING [ft^3]	METER TEMP [oF] inlet	METER TEMP [oF] outlet	STACK TEMP [°F]	PROBE TEMP [°F]	~~FILTER BOX~~ LINE [°F]	LAST IMP TEMP [°F]	METER EXHAUST O_2 [% vol]	METER EXHAUST CO_2 [% vol]
	1238	0					783.884								
G-2"		10	-5.7	0.58	1.4	6	789.9	40	39	263	319	246	39	7.0	13.2
		20		0.58	1.4	7	795.9	44	40	266	320	250	40		
	1305	30		0.59	1.4	7	801.7	47	40	266	320	255	41		
		40		0.58	1.4	8	807.5	47	42	262	315	255	41		
		50	-5.8	0.58	1.4	10	813.2	45	43	258	320	252	41	8.2	12.1
		60		0.55	1.3	15	820.244	45	43	268	319	253	40		← Filter Change
		~~70~~	filter change =				820.402	Leak check = good							
	70	~~80~~	-5.7	0.57	1.4	6	826.2	46	43	254	314	253	40	8.2	12.1
	80	~~90~~		0.56	1.4	7	832.9	47	43	272	321	252	41		
	90	~~100~~		0.55	1.3	10	838.5	48	44	269	319	252	42		
	100	~~110~~	-5.8	0.55	1.3	12	843.5	47	44	268	320	252	42	8.0	12.2
	110	~~120~~		0.58	1.4	16	848.982	47	44	268	320	252	42		
	~~120~~														
				RHS											
AVERAGE		110	-5.75	0.570	1.373		64.94	44.0		264.9				7.85	12.4

Sample Train Pre Test 0.001 ft^3 @ 15 in. Hg
Leak Checks: Post Test 0.004 ft^3 @ 20 in. Hg

Pitot Tube PreTest ✓ @ 6 in. H_2O
Leak Checks: Post Test ✓ @ 6 in. H_2O

CONSOL ENERGY.

NOTE: Purge for 10 minutes at end of sampling.

ONTARIO HYDRO Hg SAMPLING AND SPECIATION FIELD DATA SHEET

Page _____ of _____

TEST ID	OUTA-2	METER BOX	N-5	CAL. DATA: delta H	1.951	Comments:	
PLANT	PPL Martins Creek	PITOT TUBE DESC	E13	Y	1.010		
LOCATION	ESP Outlet A	PROBE LENGTH [ft]	5	C(p)	0.834		
DATE	12-5-06	NOZZLE ID [inch]	5/16 B 0.31	FILTER BOX SETTING	~~325~~ 275		
OPERATOR(S)	KC, RO, BS	%H_2O (Assumed)	~~5~~ 10	PROBE HTR SETTING	~~325~~ 275		
AMBIENT TEMP [°F]	~44°	FILTER ID	26	DUCT X-SECTION	circ ?	rect ?	other:
BAR. PRESS. [" Hg]	29.88	K FACTOR	5.98	DUCT DIMENSIONS		DUCT AREA	

TRAVERSE POINT [port-inch]	CLOCK TIME (24-hr)	SAMPLE TIME [minute]	STATIC PRES [" H_2O]	PITOT HEAD [" H_2O]	METER DIFF PRESSURE [" H_2O]	METER VACUUM [" Hg]	METER READING [ft^3]	METER TEMP [oF] inlet	METER TEMP [oF] outlet	STACK TEMP [°F]	PROBE TEMP [°F]	FILTER BOX [°F]	LAST IMP TEMP [°F]	METER EXHAUST O_2 [% vol]	METER EXHAUST CO_2 [% vol]
	1240	0					069.80								
Port 17 middle depth		10		.36	2.13	3	076.53	58	54	273	275	275	41	—	—
		20		.37	2.18	3	083.32	61	54	273	276	275	43	9.0	11.3
		30		.36	2.13	3	090.02	63	55	273	275	275	46	—	—
		40		.36	2.13	3	096.75	64	56	273	273	275	48	8.9	11.4
		50		.37	2.18	3	103.56	64	57	273	273	275	48	—	—
		60		.36	2.13	3	110.34	65	56	273	275	275	47	9.0	11.3
		70		.35	2.10	3	117.08	65	57	273	273	276	48	—	—
		80		.36	2.13	3	123.88	66	57	273	273	275	47	9.0	11.3
		90		.36	2.13	3	130.69	65	57	273	275	275	47	—	—
		100		.36	2.13	3	137.90	65	57	273	274	275	47	8.7	11.6
		110		0.36	2.13	3	144.27	65	57	273	275	274	46	8.8	11.5
		120		0.37	2.18	3	151.07	65	57	273	275	275	46	8.7	11.6
	1440														
AVERAGE		120	-6.326	0.361	2.14		81.27	60.0		273				8.87	11.43

Sample Train Leak Checks: Pre Test OK ft^3 @ 10 in. Hg; Post Test OK ft^3 @ 10 in. Hg

Pitot Tube Leak Checks: PreTest OK @ 7 in. H_2O; Post Test OK @ 7 in. H_2O

CONSOL ENERGY

NOTE: Purge for 10 minutes at end of sampling.

ONTARIO HYDRO Hg SAMPLING AND SPECIATION FIELD DATA SHEET

Page _____ of _____

TEST ID	OUT B-2	METER BOX	2-4	CAL. DATA: delta H	1.853
PLANT	PPL Martins Creek	PITOT TUBE DESC	E-6	Y	0.985
LOCATION	ESP Outlet B	PROBE LENGTH [ft]	5	C(p)	0.826
DATE	12-5-06	NOZZLE ID [inch]	9/32 0.27	FILTER BOX SETTING	~~325~~ 275
OPERATOR(S)	KC, RO, BS	%H_2O (Assumed)	X	PROBE HTR SETTING	~~326~~ 275
AMBIENT TEMP [°F]	~44°	FILTER ID	27	DUCT X-SECTION	circ ? / rect ? / other:
BAR. PRESS. [" Hg]	29.88	K FACTOR	3.62	DUCT DIMENSIONS / DUCT AREA	

Comments: _____

TRAVERSE POINT [port-inch]	CLOCK TIME (24-hr)	SAMPLE TIME [minute]	STATIC PRES [" H_2O]	PITOT HEAD [" H_2O]	METER DIFF PRESSURE [" H_2O]	METER VACUUM [" Hg]	METER READING [ft^3]	METER TEMP [oF] inlet	METER TEMP [oF] outlet	STACK TEMP [°F]	PROBE TEMP [°F]	FILTER BOX [°F]	LAST IMP TEMP [°F]	METER EXHAUST O_2 [% vol]	METER EXHAUST CO_2 [% vol]
	1245	0					233.00								
		10		.41	1.48	4	239.56	52	50	287	274	274	41	—	—
		20		.43	1.55	4	246.18	57	51	286	275	275	43	9.4	10.9
		30		.40	1.43	4	252.59	59	51	286	266	274	44	—	—
		40		.42	1.52	4	259.19	60	52	286	265	274	46	9.4	10.9
		50		.40	1.43	4	265.60	60	52	287	257	275	47	—	—
		60		.42	1.52	4	272.22	61	52	286	272	275	47	9.3	11.0
		70		.41	1.48	4	278.78	61	52	286	268	274	47	—	—
		80		.40	1.43	4	285.24	61	53	287	260	275	47	9.4	10.9
		90		.40	1.43	4	291.68	61	53	286	264	276	48	—	—
		100		.42	1.52	4	298.36	61	53	285	258	275	49	9.3	11.0
		110		0.43	1.55	4	—	61	53	285	259	276	49	9.3	11.0
		120		.43	1.55	4	311.68	61	53	285	261	275	47	9.4	10.9
	1445														
AVERAGE		120	-6.39	0.44	1.491		78.68	55.83		286				9.35	10.94

Port 7 Probe depth

Port 8 Probe depth

Sample Train Leak Checks: Pre Test OK ft^3 @ 10 in. Hg; Post Test OK ft^3 @ 10 in. Hg

Pitot Tube Leak Checks: PreTest OK @ 7 in. H_2O; Post Test OK @ 7 in. H_2O

NOTE: Purge for 10 minutes at end of sampling.

CONSOL ENERGY

ONTARIO HYDRO Hg SAMPLING AND SPECIATION FIELD DATA SHEET

Page _____ of _____

TEST ID	Run 3	METER BOX	2	CAL. DATA: delta H	1.979
PLANT	PPL Martins Creek	PITOT TUBE DESC		Y	0.977
LOCATION	Air Heater Outlet	PROBE LENGTH [ft]	3'	C(p)	
DATE	12/6/06	NOZZLE ID [inch]	7/32 A - .215	FILTER BOX SETTING	XXX
OPERATOR(S)	BG + RS	%H_2O (Assumed)	8	PROBE HTR SETTING	325
AMBIENT TEMP [°F]	25	FILTER ID	21	DUCT X-SECTION	circ ? / rect ? / other:
BAR. PRESS. [" Hg]	30.00	K FACTOR	1.5	DUCT DIMENSIONS / DUCT AREA	

Comments: 14.2

TRAVERSE POINT [port-inch]	CLOCK TIME (24-hr)	SAMPLE TIME [minute]	STATIC PRES [" H_2O]	PITOT HEAD [" H_2O]	METER DIFF PRESSURE [" H_2O]	METER VACUUM [" Hg]	METER READING [ft^3]	METER TEMP [oF] (6) inlet	METER TEMP [oF] (7) outlet	STACK TEMP [°F] (1)	PROBE TEMP [°F] (2)	~~FILTER BOX~~ LINE [°F] (3)	LAST IMP TEMP [°F] (4)	METER EXHAUST O_2 [% vol]	METER EXHAUST CO_2 [% vol]
	0850	0					861.611								
		10	-5.7	0.49	0.72	3		28	28	254	318	250	30	—	—
	0900	20		0.45	0.72	3	865.76	32	27	263	315	248	31	—	—
	0910	30		0.45	0.74	3	869.85	35	27	262	315	251	31	8.2	12.1
		40	-5.4	0.45	0.68	4	874.0	37	30	262	319	257	33		
		50		0.45	0.68	5	882.1	38	31	264	320	258	33		
		60		0.47	0.70	5	886.3	40	34	266	321	258	35		
		70	-5.8	0.48	0.72	6	890.5	41	35	264	320	258	36	8.2	12.0
		80		0.48	0.72	7	894.7	43	37	267	321	258	38		
		90		0.49	0.74	8	899.0	43	38	276	320	258	38		
		100		0.47	0.70	9	903.3	44	39	266	320	258	39	8.7	11.6
		110	-5.8	0.46	0.70	12	907.2	44	40	265	320	258	40		
		~~120~~		0.46	0.70	15	911.038	45	40	267	318	259	40		
		119					Stopped								
							testing								
							at 119 min.								
				EMS											
AVERAGE			-5.7	0.467	0.71		49.427	36.5		264.7				8.4	11.9

Sample Train Pre Test 0.001 ft^3 @ 15 in. Hg
Leak Checks: Post Test _____ ft^3 @ _____ in. Hg

Pitot Tube PreTest ✓ @ 6 in. H_2O
Leak Checks: Post Test _____ @ _____ in. H_2O

NOTE: Purge for 10 minutes at end of sampling.

CONSOL ENERGY.

7.4

ONTARIO HYDRO Hg SAMPLING AND SPECIATION FIELD DATA SHEET

Page _____ of _____

TEST ID	OHT A #3	METER BOX	N-5	CAL. DATA: delta H	1.951
PLANT	PPL Martins Creek	PITOT TUBE DESC		Y	1.010
LOCATION	ESP Outlet A	PROBE LENGTH [ft]		C(p)	
DATE	12/6/06	NOZZLE ID [inch]		FILTER BOX SETTING	~~325~~ 275
OPERATOR(S)	KC, RO, BS	%H_2O (Assumed)	8	PROBE HTR SETTING	~~325~~ 275
AMBIENT TEMP [°F]	~28°	FILTER ID	28	DUCT X-SECTION	circ ? / rect ? / other:
BAR. PRESS. [" Hg]	30.00	K FACTOR	7.2	DUCT DIMENSIONS / DUCT AREA	

Comments: 12/7

TRAVERSE POINT [port-inch]	CLOCK TIME (24-hr)	SAMPLE TIME [minute]	STATIC PRES [" H_2O]	PITOT HEAD [" H_2O]	METER DIFF PRESSURE [" H_2O]	METER VACUUM [" Hg]	METER READING [ft^3]	METER TEMP [oF] inlet	METER TEMP [oF] outlet	STACK TEMP [°F]	PROBE TEMP [°F]	FILTER BOX [°F]	LAST IMP TEMP [°F]	METER EXHAUST O_2 [% vol]	METER EXHAUST CO_2 [% vol]
	0855	0					155.90								
		10		.35	2.52	5	162.54	41	42	270	275	278	36	—	—
		20		.34	2.40	5	169.71	47	46	270	275	277	39	9.2	11.1
		30		.33	2.35	5	176.53	54	49	269	275	276	41	—	—
		40		.33	2.35	5	183.45	56	52	272	275	276	43	9.2	11.1
		50		.34	2.40	5	190.43	58	52	272	274	275	45	—	—
		60		.33	2.35	5	197.47	59	53	270	275	275	46	9.2	11.1
		70		.33	2.35	5	204.50	60	53	270	276	275	47	—	—
		80		.34	2.40	5	211.60	61	54	271	274	276	48	9.4	10.8
		90		.34	2.40	5	218.75	61	55	271	273	275	48	—	—
		100		.34	2.40	5	225.94	62	55	270	275	275	48	9.3	11.0
		110		.34	2.40	5	233.15	63	55	271	275	275	48	—	—
		120		.33	2.35	5	240.26	63	55	272	275	275	47	9.4	10.8
	1055														
				Kms											
AVERAGE			-5.858	0.337	2.39		84.36	54.4		270.7				9.3	~~10~~ 11.0

Sample Train Leak Checks: Pre Test OK ft^3 @ 10 in. Hg; Post Test OK ft^3 @ 10 in. Hg

Pitot Tube Leak Checks: PreTest OK @ 7 in. H_2O; Post Test OK @ 7 in. H_2O

NOTE: Purge for 10 minutes at end of sampling.

CONSOL ENERGY

3.9

ONTARIO HYDRO Hg SAMPLING AND SPECIATION FIELD DATA SHEET

Page _____ of _____

TEST ID	Out B #3	METER BOX	2-4	CAL. DATA: delta H	1.847	Comments:	
PLANT	PPL Martins Creek	PITOT TUBE DESC		Y	1.006		
LOCATION	ESP Outlet B	PROBE LENGTH [ft]		C(p)			40.8
DATE	12-6-06	NOZZLE ID [inch]		FILTER BOX SETTING	~~325~~ 275		
OPERATOR(S)	KC, RO, BS	%H_2O (Assumed)	8	PROBE HTR SETTING	~~325~~ 275		
AMBIENT TEMP [°F]	~28°	FILTER ID	29	DUCT X-SECTION	circ ?	rect ?	other:
BAR. PRESS. [" Hg]	30.00	K FACTOR	3.90	DUCT DIMENSIONS		DUCT AREA	

TRAVERSE POINT [port-inch]	CLOCK TIME (24-hr)	SAMPLE TIME [minute]	STATIC PRES [" H_2O]	PITOT HEAD [" H_2O]	METER DIFF PRESSURE [" H_2O]	METER VACUUM [" Hg]	METER READING [ft^3]	METER TEMP [oF] inlet	METER TEMP [oF] outlet	STACK TEMP [°F]	PROBE TEMP [°F]	FILTER BOX [°F]	LAST IMP TEMP [°F]	METER EXHAUST O_2 [% vol]	METER EXHAUST CO_2 [% vol]
	0900	0					320.10								
		10		.35	1.38	4	326.29	37	33	284	273	275	38	—	—
		20		.35	1.38	4	333.46	46	36	282	275	275	42	10.0	10.3
		30		.35	1.38	4	338.63	49	38	283	273	275	43	—	—
		40		.35	1.38	4	344.82	52	41	284	275	275	45	10.2	10.2
		50		.35	1.38	4	351.04	54	43	284	274	275	46	—	—
		60		.34	1.32	4	357.14	55	44	283	275	274	47	10.0	10.3
		70		.35	1.38	4	363.50	57	46	284	274	275	48	—	—
		80		.35	1.38	4	369.78	57	47	284	271	275	48	10.2	10.2
		90		.35	1.38	4	376.08	58	48	283	272	275	48	—	—
		100		.35	1.38	4	382.40	59	49	282	276	275	48	10.1	10.3
		110		.35	1.38	4	388.69	60	50	284	272	275	47	—	—
		120		.35	1.38	4	395.04	61	51	285	270	273	46	10.1	10.3
	1100														
				pts	1.375										
AVERAGE			-5.997	0.349	~~1.370~~		74.94	48.8		283.5				10.1	10.3

Sample Train Leak Checks: Pre Test OK ft^3 @ 10 in. Hg; Post Test OK ft^3 @ 10 in. Hg

Pitot Tube Leak Checks: PreTest OK @ 7 in. H_2O; Post Test OK @ 7 in. H_2O

CONSOL ENERGY

NOTE: Purge for 10 minutes at end of sampling.

ONTARIO HYDRO Hg SAMPLING AND SPECIATION FIELD DATA SHEET

Page _____ of _____

TEST ID	Run 4	METER BOX	2	CAL. DATA: delta H	1.979
PLANT	PPL Martins Creek	PITOT TUBE DESC		Y	0.977
LOCATION	Air Heater Outlet	PROBE LENGTH [ft]	3'	C(p)	
DATE	12/6/06	NOZZLE ID [inch]		FILTER BOX SETTING	XXX
OPERATOR(S)	BG + RS	%H_2O (Assumed)	8	PROBE HTR SETTING	325
AMBIENT TEMP [°F]	40°	FILTER ID	22	DUCT X-SECTION	circ ? / rect ? / other:
BAR. PRESS. [" Hg]	29.91/29.88	K FACTOR	1.5	DUCT DIMENSIONS / DUCT AREA	

Comments: _____

TRAVERSE POINT [port-inch]	CLOCK TIME (24-hr)	SAMPLE TIME [minute]	STATIC PRES [" H_2O]	PITOT HEAD [" H_2O]	METER DIFF PRESSURE [" H_2O]	METER VACUUM [" Hg]	METER READING [ft^3]	METER TEMP [oF] (6) inlet	METER TEMP [oF] (7) outlet	STACK TEMP [°F] (1)	PROBE TEMP [°F] (2)	FILTER BOX [°F] (3)	LAST IMP TEMP [°F] (4)	METER EXHAUST O_2 [% vol]	METER EXHAUST CO_2 [% vol]
	1154	0					920.764								
		10	-5.6	0.45	0.68	6	925.1	42	41	260	315	251	40		
		20		0.48	0.72	4	929.4	45	42	270	314	257	40	8.5	11.8
		30		0.49	0.72	4	933.6	47	43	275	320	259	39		
		40		0.47	0.70	6	938.0	48	45	273	319	260	39		
		50	-5.6	0.46	0.70	6	942.2	49	45	271	319	260	40	8.5	11.8
		60		0.46	0.70	6	946.3	50	46	272	320	260	41		
		70		0.48	0.72	8	950.6	51	46	275	318	260	41		
		80		0.46	0.70	10	954.9	50	47	271	310	260	41	8.8	11.5
		90		0.45	0.68	10		50	47	270	309	260	41		
		100		0.45	0.68	13	963.3	50	47	273	316	260	43		
		~~110~~	-5.5	0.45	0.68	16	966.187	50	47	275	319	261	44	8.8	11.5
		107		~~e~~											
				pitot											
AVERAGE		107	-5.56	0.464	0.698		45.423	46.73		271.4				8.65	11.65

Sample Train Pre Test 0.002 ft^3 @ 12 in. Hg
Leak Checks: Post Test _____ ft^3 @ _____ in. Hg

Pitot Tube PreTest ✓ @ 6 in. H_2O
Leak Checks: Post Test _____ @ _____ in. H_2O

NOTE: Purge for 10 minutes at end of sampling.

CONSOL ENERGY.

ONTARIO HYDRO Hg SAMPLING AND SPECIATION FIELD DATA SHEET

Page _____ of _____

TEST ID	OUT A #4	METER BOX	N-S	CAL. DATA: delta H	1.951
PLANT	PPL Martins Creek	PITOT TUBE DESC		Y	1.010
LOCATION	ESP Outlet A	PROBE LENGTH [ft]		C(p)	
DATE	12-6-06	NOZZLE ID [inch]		FILTER BOX SETTING	~~325~~ 275
OPERATOR(S)	KC, RO, BS	%H_2O (Assumed)	8	PROBE HTR SETTING	~~325~~ 275
AMBIENT TEMP [°F]	~40°	FILTER ID	30	DUCT X-SECTION	circ ? / rect ? / other:
BAR. PRESS. [" Hg]	29.91	K FACTOR	1.20	DUCT DIMENSIONS / DUCT AREA	

Comments:

TRAVERSE POINT [port-inch]	CLOCK TIME (24-hr)	SAMPLE TIME [minute]	STATIC PRES [" H_2O]	PITOT HEAD [" H_2O]	METER DIFF PRESSURE [" H_2O]	METER VACUUM [" Hg]	METER READING [ft^3]	METER TEMP [oF] inlet	METER TEMP [oF] outlet	STACK TEMP [°F]	PROBE TEMP [°F]	FILTER BOX [°F]	LAST IMP TEMP [°F]	METER EXHAUST O_2 [% vol]	METER EXHAUST CO_2 [% vol]
	1155	0					245.30								
		10		.33	2.38	4.5	252.37	52	49	270	255	275	43	—	—
		20		.33	2.38	4.5	259.42	57	52	272	262	276	45	9.7	10.6
		30		.33	2.38	4.5	266.52	59	54	273	262	275	46	—	—
		40		.33	2.38	4.5	273.66	61	55	272	265	275	48	9.5	10.8
		50		.32	2.30	4.5	280.74	62	56	271	266	275	48	—	—
		60		.33	2.38	4.5	287.91	63	57	272	262	275	48	9.7	10.6
		70		.33	2.38	4.5	295.12	63	57	273	260	275	47	—	—
		80		.33	2.38	4.5	302.31	62	57	272	258	274	47	9.7	10.6
		90		.32	2.30	4.5	309.40	61	55	271	257	275	48	—	—
		100		0.32	2.30	4.5	316.42	63	57	272	267	276	47	9.8	10.5
		110		0.32	2.30	4.5	323.46	64	58	273	265	279	47	9.7	10.6
		120		.32	2.30	4.5	330.51	64	58	272	263	275	47	9.5	10.8
	1355														
				pms											
AVERAGE		120	-5.839	0.326	2.347		85.21	58.2		271.9				9.66	10.64

Sample Train Leak Checks: Pre Test OK ft^3 @ 10 in. Hg; Post Test OK ft^3 @ 10 in. Hg

Pitot Tube Leak Checks: PreTest OK @ 7 in. H_2O; Post Test OK @ 7 in. H_2O

CONSOL ENERGY

NOTE: Purge for 10 minutes at end of sampling.

ONTARIO HYDRO Hg SAMPLING AND SPECIATION FIELD DATA SHEET

Page _____ of _____

TEST ID	OUT B #4	METER BOX	N-4	CAL. DATA: delta H	1.847	Comments:	
PLANT	PPL Martins Creek	PITOT TUBE DESC		Y	1.006		
LOCATION	ESP Outlet B	PROBE LENGTH [ft]		C(p)			
DATE	12-6-06	NOZZLE ID [inch]		FILTER BOX SETTING	~~325~~ 275		
OPERATOR(S)	KC, RO, BS	%H_2O (Assumed)	8	PROBE HTR SETTING	~~325~~ 275		
AMBIENT TEMP [°F]	~40°	FILTER ID	31	DUCT X-SECTION	circ ?	rect ?	other:
BAR. PRESS. [" Hg]	29.91	K FACTOR	3.90	DUCT DIMENSIONS		DUCT AREA	

TRAVERSE POINT [port-inch]	CLOCK TIME (24-hr)	SAMPLE TIME [minute]	STATIC PRES [" H_2O]	PITOT HEAD [" H_2O]	METER DIFF PRESSURE [" H_2O]	METER VACUUM [" Hg]	METER READING [ft^3]	METER TEMP [oF] inlet	METER TEMP [oF] outlet	STACK TEMP [°F]	PROBE TEMP [°F]	FILTER BOX [°F]	LAST IMP TEMP [°F]	METER EXHAUST O_2 [% vol]	METER EXHAUST CO_2 [% vol]
	1200	0					402.10								
		10		.37	1.45	4	408.54	51	47	282	264	275	39	—	—
		20		.40	1.57	4	415.19	54	48	284	274	274	41	10.1	10.3
		30		.40	1.57	4	421.88	57	49	284	277	275	44	—	—
		40		.39	1.52	4	428.51	59	50	283	271	275	45	9.8	10.6
		50		.39	1.52	4	435.12	60	51	283	277	275	45	—	—
		60		.39	1.52	4	—	61	52	284	272	275	44	10.0	10.4
		70		.39	1.52	4	448.35	61	53	282	272	274	45	—	—
		80		.39	1.52	4	454.98	61	54	282	271	274	46	10.1	10.3
		90		.37	1.45	4	461.43	61	54	281	276	276	46	—	—
		100		.37	1.45	4	467.90	62	54	283	270	276	46	10.1	10.3
		110		0.38	1.48	4	474.37	63	55	283	272	275	46	10.1	10.3
		120		.37	1.45	4	480.84	63	55	282	277	276	45	10.1	10.3
	1400														
AVERAGE			-6.00	0.384	1.502		78.74	55.63		282.8				10.04	10.36

Sample Train Leak Checks: Pre Test OK ft^3 @ 10 in. Hg; Post Test OK ft^3 @ 10 in. Hg

Pitot Tube Leak Checks: PreTest OK @ 7 in. H_2O; Post Test OK @ 7 in. H_2O

CONSOL ENERGY.

NOTE: Purge for 10 minutes at end of sampling.

Test #1

SO_3 FIELD SAMPLING DATA SHEET

PLANT	PPL Martins Creek
LOCATION	Air Heater Outlet
DUCT DIMENSIONS	
DUCT AREA	
DATE	12/5/06
TIME	Start- 1156 Stop- 1256
SAMPLE BOX	
METER BOX	NuTech # 3
PITOT TUBE DESC	
OPERATOR(S)	DG + RS

AMBIENT TEMP [—uo°F]	36
BAROMETRIC PRESSURE [" Hg]	
$\%H_2O$ (Assumed)	
PROBE LENGTH [ft]	
NOZZLE ID [inch]	XXXX
CALIBRATION FACTORS: delta H	XXXX
Y	1.047
C(p)	
K	XXXX

WATER BATH SETTING	145		
PROBE HTR SETTING	550		
DUCT X-SECTION	circ ?	rect ?	other:
POSITION OF PORT A			

Page _____ of _____

DRY MOLECULAR WEIGHT (Assumed)	
WET MOLECULAR WEIGHT (Assumed)	

(Assumed=)

TRAVRSE POINT [inch]	SAMPLE TIME [minute]	STATIC PRESSURE [" H_2O]	STACK TEMP [°F]	PITOT HEAD [" H_2O]	ROTOMETER SETTING	METER READING [ft^3]	METER TEMP [°F] inlet	METER TEMP [°F] outlet	CONDENSER TEMP [°F]	PROBE TEMP [°F]	WATER BATH TEMP [°F]	METER VACUUM [" Hg]	O_2 METER [%]	CONTROL ROOM O_2 [%]	CONTROL ROOM DUCT TEMP [—uo°F]
						228.537									
	0 - 10	—	270	—	8%	229.3	44	44	140	511	—	4			
	10 - 20	—	272	—	8%	230.1	44	44	151	512	—	4			
	20 - 30	—	269	—	8%	230.9	44	44	154	511	—	4			
	30 - 40	—	272	—	8%	231.8	46	45	156	510	—	4			
	40 - 50	—	270	—	8%	232.5	46	45	140	505	—	4			
	50 - 60	—	272	—	8%	233.126	46	45	150	510	—	4			
AVERAGE			270.8			4.589	44.75		148.5						

REMARKS Pre-Leak Check: OK Post-Leak Check: OK

Condenser Temp = 140°F

Sampling Rate=3 lpm=0.1 ft^3/min

	ALIQUOT / VOLUME	TITRATION (ml)		lb/dscf	ppmv,act	ppmv,cor
PLUG--SO_3						
PROBE--SO_3						
CONDENSER--SO_3						
BLANK						
IMPINGER (H_2O_2)--SO_2						

Gas Vol, dscf

$BaCl_2$ NORMALITY

CONSOL ENERGY

O:\RdAppRes\STACK\datasheets\SO3SHEET
12/01/06

Run 2

SO_3 FIELD SAMPLING DATA SHEET

PLANT	PPL Martins Creek
LOCATION	Air Heater Outlet
DUCT DIMENSIONS	
DUCT AREA	
DATE	12/15/06
TIME	Start- 1423 Stop- 1523
SAMPLE BOX	
METER BOX	NuTech # 3
PITOT TUBE DESC	
OPERATOR(S)	BG + RS

AMBIENT TEMP [—uo°F]	36
BAROMETRIC PRESSURE [" Hg]	29.33
%H_2O (Assumed)	
PROBE LENGTH [ft]	
NOZZLE ID [inch]	XXXX
CALIBRATION FACTORS: delta H	XXXX
Y	
C(p)	
K	XXXX

WATER BATH SETTING	145		
PROBE HTR SETTING	550		
DUCT X-SECTION	circ ?	rect ?	other:
POSITION OF PORT A			

Page _____ of _____

DRY MOLECULAR WEIGHT (Assumed)	
WET MOLECULAR WEIGHT (Assumed)	

(Assumed=)

TRAVRSE POINT [inch]	SAMPLE TIME [minute]	STATIC PRESSURE [" H_2O]	STACK TEMP [°F]	PITOT HEAD [" H_2O]	ROTOMETER SETTING	METER READING [ft^3]	METER TEMP [°F] inlet	METER TEMP [°F] outlet	CONDENSER TEMP [°F]	PROBE TEMP [°F]	WATER BATH TEMP [°F]	METER VACUUM [" Hg]	O_2 METER [%]	CONTROL ROOM O_2 [%]	CONTROL ROOM DUCT TEMP [—uo°F]
						234.108									
	0 - 10	—	—	—	8%	234.9	44	44	140	522	—	4			
	10 - 20		269		8%	235.8	48	47	147	526		4			
	20 - 30		270		8%	236.6	50	49	144	508		4			
	30 - 40		270		8%	237.4	51	49	144	508		4			
	40 - 50		271		8%	238.2	54	52	140	517		4			
	50 - 60		272		8%	239.186	54	52	140	510		4			
AVERAGE			270.4			5.078	49.5		142.5						

REMARKS Pre-Leak Check: Good Post-Leak Check: Good

Condenser Temp = 140°F

Sampling Rate=3 lpm=0.1 ft^3/min

	ALIQUOT / VOLUME	TITRATION (ml)		lb/dscf	ppmv,act	ppmv,cor
PLUG--SO_3						
PROBE--SO_3						
CONDENSER--SO_3						
BLANK						
IMPINGER (H_2O_2)--SO_2						

Gas Vol, dscf

$BaCl_2$ NORMALITY

CONSOL ENERGY

O:\RdAppRes\STACK\datasheets\SO3SHEET
12/01/06

Run 3

SO_3 FIELD SAMPLING DATA SHEET

PLANT	PPL Martins Creek
LOCATION	Air Heater Outlet
DUCT DIMENSIONS	
DUCT AREA	
DATE	12/6/06
TIME	Start-0935 Stop- 1035
SAMPLE BOX	
METER BOX	NuTech # 3
PITOT TUBE DESC	
OPERATOR(S)	BG + RS

AMBIENT TEMP [—uo°F]	30
BAROMETRIC PRESSURE [" Hg]	30.00
%H_2O (Assumed)	6%
PROBE LENGTH [ft]	3'
NOZZLE ID [inch]	XXXX
CALIBRATION FACTORS: delta H	XXXX
Y	1.047
C(p)	–
K	XXXX

WATER BATH SETTING	145
PROBE HTR SETTING	550
DUCT X-SECTION	circ ? rect ? other:
POSITION OF PORT A	

Page _____ of _____

DRY MOLECULAR WEIGHT (Assumed)	
WET MOLECULAR WEIGHT (Assumed)	

(Assumed=)

TRAVRSE POINT [inch]	SAMPLE TIME [minute]	STATIC PRESSURE [" H_2O]	STACK TEMP [°F]	PITOT HEAD [" H_2O]	ROTOMETER SETTING	METER READING [ft^3]	METER TEMP [°F] inlet	METER TEMP [°F] outlet	CONDENSER TEMP [°F]	PROBE TEMP [°F]	WATER BATH TEMP [°F]	METER VACUUM [" Hg]	O_2 METER [%]	CONTROL ROOM O_2 [%]	CONTROL ROOM DUCT TEMP [—uo°F]
						252.643									
	0 - 10	–	269	–	10%	253.6	51	49	146	517	–	4			
	10 - 20		273		10%	254.6	52	49	140	520		4			
	20 - 30		272		10%	255.5	52	51	144	509		4			
	30 - 40		273		10%	256.5	52	51	143	518		4			
	40 - 50		272		10%	257.5	53	51	143	514		4			
	50 - 60														
AVERAGE			271.8			4.857	51.1		143.2						

REMARKS Pre-Leak Check: Post-Leak Check:

Condenser Temp = 140°F

Sampling Rate=3 lpm=0.1 ft^3/min

	ALIQUOT / VOLUME	TITRATION (ml)		lb/dscf	ppmv,act	ppmv,cor
PLUG–SO_3						
PROBE–SO_3						
CONDENSER–SO_3						
BLANK						
IMPINGER (H_2O_2)–SO_2						

Gas Vol, dscf

$BaCl_2$ NORMALITY

CONSOL ENERGY

O:\RdAppRes\STACK\datasheets\SO3SHEET
12/01/06

Run 4

SO_3 FIELD SAMPLING DATA SHEET

PLANT	PPL Martins Creek
LOCATION	Air Heater Outlet
DUCT DIMENSIONS	
DUCT AREA	
DATE	12/6/06
TIME	Start- 1204 Stop- 1305
SAMPLE BOX	
METER BOX	NuTech # 3
PITOT TUBE DESC	
OPERATOR(S)	BG + RS

AMBIENT TEMP [—uo°F]	40
BAROMETRIC PRESSURE [" Hg]	29.91
%H_2O (Assumed)	
PROBE LENGTH [ft]	
NOZZLE ID [inch]	XXXX
CALIBRATION FACTORS: delta H	XXXX
Y	1.047
C(p)	
K	XXXX

WATER BATH SETTING	145		
PROBE HTR SETTING	550		
DUCT X-SECTION	circ ?	rect ?	other:
POSITION OF PORT A			

Page _____ of _____

DRY MOLECULAR WEIGHT (Assumed)	
WET MOLECULAR WEIGHT (Assumed)	

(Assumed=)

TRAVRSE POINT [inch]	SAMPLE TIME [minute]	STATIC PRESSURE [" H_2O]	STACK TEMP [°F]	PITOT HEAD [" H_2O]	ROTOMETER SETTING	METER READING [ft^3]	METER TEMP [°F] inlet	METER TEMP [°F] outlet	CONDENSER TEMP [°F]	PROBE TEMP [°F]	WATER BATH TEMP [°F]	METER VACUUM [" Hg]	O_2 METER [%]	CONTROL ROOM O_2 [%]	CONTROL ROOM DUCT TEMP [—uo°F]
						259.561									
	0 - 10	—	254	—	10%	260.4	54	54	151	519	—	4			
	10 - 20		272		10%	261.3	57	55	144	505		4			
	20 - 30		270		10%	262.3	58	55	148	510		4			
	30 - 40		269		10%	263.2	58	56	143	514		4			
	40 - 50		270		10%	264.2	58	57	144	508		4			
	50 - 60		272		10%	265.188	59	57	141	506		6			
AVERAGE			267.8			5.627	56.33		145.2						

REMARKS Pre-Leak Check: Post-Leak Check:

Condenser Temp = 140°F

Sampling Rate=3 lpm=0.1 ft^3/min

	ALIQUOT / VOLUME	TITRATION (ml)		lb/dscf	ppmv,act	ppmv,cor
PLUG--SO_3						
PROBE--SO_3						
CONDENSER--SO_3						
BLANK						
IMPINGER (H_2O_2)--SO_2						

Gas Vol, dscf

$BaCl_2$ NORMALITY

CONSOL ENERGY

O:\RdAppRes\STACK\datasheets\SO3SHEET
12/01/06

Axial Flow Check

Location	Inlet	Duct Ht, "		Barometric	
Date	12/4/06	Duct ID,"		Static	-4.89
Time	1440-1530	Duct Area	ft²	Dry Bulb	
Tube I.D.	S-58	% O_2		Wet Bulb	
C-Factor		% CO_2		% H_2O	
Operator(s)	RW, BLS	% N_2		W.M.Wt	

PORT/ POINT	DISTANCE [" From Wall]	TEMP [°F]	DELTA P [" H_2O]	VELOCITY [Ft/Sec]	Null Angle
1-7"		239	0.215		
1-21"	-4.674	243	0.336		~0
1-35"		249	0.324		
2-7"		253	0.229		
2-21"	-4.764	256	0.375		~0
2-35"		255	0.355		
3-7"		262	0.299		
3-21"	-5.099	263	0.428		~0
3-35"		261	0.418		
4-7"		257	0.265		
4-21"	-5.320	261	0.407		~0
4-35"		262	0.400		
5-7"		256	0.180		
5-21"	-5.325	261	0.351		~0
5-35"		262	0.368		
6-7"		257	0.206		
6-21"	-5.230	260	0.260		~0
6-35"		258	0.334		
7-7"		263	0.151		
7-21"	-4.570	265	0.359		~0
7-35"		267	0.396		
8-7		263	0.198		
8-21	-4.840	272	0.465		~0
8-35		272	0.400		
Average					
Maximum		256.6	0.35		
Minimum					
SDEV					

Statics

yaw cks

DATA SUMMARY	
Velocity, [fps]	
acfm	
scfm	
dscfm	
Ex Air Free cfm	
Est. MM Btu/hr Heat Input	
Est. Firing Rate, lb/hr	

N-2
ΔH@ = 1.979
Y = 0.977
Cp = E-S = 0.821
Dn = 1/4"D = 0.248
K = 2.51

top view

49½"

8"

Axial Flow Check

Location	Inlet	Duct Ht, "		Barometric	
Date	12/4/06	Duct ID,"		Static	
Time		Duct Area	ft^2	Dry Bulb	
Tube I.D.	S-50	% O_2		Wet Bulb	
C-Factor		% CO_2		% H_20	
Operator(s)	RLO BPS	% N_2		W.M.Wt	

PORT/ POINT	DISTANCE [" From Wall]	TEMP [°F]	DELTA P [" H_2O]	VELOCITY [Ft/Sec]	Null Angle
9-7"		267	0.430		
9-21"	-4.793	268	0.451		NO
9-35"		270	0.404		
10-7"		263	0.304		
10-21"	-4.798	266	0.388		NO
10-35"		266	0.336		
11-7"		254	0.165		
11-21"	-4.628	259	0.283		NO
11-35"		260	0.322		
12-7"		252	0.299		
12-21"	-5.000	258	0.458		NO
12-35"		260	0.386		
13-7"		249	0.249		
13-21"	-5.003	257	0.369		NO
13-35		258	0.321		
14-7"		244	0.307		
14-21"	-4.647	253	0.377		NO
14-35"		254	0.376		
15-7"		246	0.317		
15-21"	-4.797	254	0.421		NO
15-35"		255	0.443		
16-7"		244	0.348		
16-21"	-4.700	245	0.447		NO
16-35"		242	0.429		
Average					
Maximum					
Minimum					
SDEV					

DATA SUMMARY	
Velocity, [fps]	
acfm	
scfm	
dscfm	
Ex Air Free cfm	
Est. MM Btu/hr Heat Input	
Est. Firing Rate, lb/hr	

Axial Flow Check

Location	Outlet B	Duct Ht, "		Barometric	
Date	12/4/06	Duct ID,"	48"	Static	-5.8
Time		Duct Area	ft²	Dry Bulb	
Tube I.D.	S - 50	% O_2		Wet Bulb	
C-Factor	BG, KC, RO,	% CO_2		% H_2O	
Operator(s)	BS	% N_2		W.M.Wt	

PORT/ POINT	DISTANCE ~~[" From Wall]~~ Velocity	TEMP [°F]	DELTA P [" H_2O]	VELOCITY [Ft/Sec]	Null ~~Angle~~ Temp Angle
A - 1	0.49	231	I - 1	0.40	~~C2 = 0~~ → 246 276
2	0.55	241	2	0.50	~~E2 = 0~~ → 246 278
3	0.52	249	3	0.44	284 C2 ≈ 0
B - 1	0.48	250	J - 1	0.49	265
2	0.58	258	2	0.48	280
3	0.43	262	3	0.39	282
C - 1	0.49	260	K - 1	0.30	260 E2 ≈ 0
2	0.45	278	2	0.26	270
3	0.48	278	3	0.30	274
D - 1	0.45	252	L - 1	0.47	265
2	0.56	268	2	0.47	267 ✓ J2 ≈ 0
3	0.52	280	3	0.46	260
E - 1	0.44	268	M - 1	0.42	260
2	0.47	279	2	0.50	264
3	0.44	280	3	0.50	264
F 1	0.47	270	N - 1	0.44	256
2	0.33	280	2	0.50	261
3	0.23	286	3	0.43	263
G 1	0.45	~~2~~268	O - 1	0.40	246
2	0.43	280	2	0.50	248
3	0.40	280	3	0.49	252
H 1	0.46	270	P - 1	0.49	244
2	0.41	277	2	0.64	247
3	0.46	280	3	0.67	252
Average					
Maximum		Avg dP = 0.457			
Minimum		Avg Ts = 265.5			
SDEV					

J-2 Use port

N-4
$\Delta H@ = 1.853$,
$\gamma = 0.985$
$C_p = 0.826$
$D = 9/32 A = 0.216$
$K_c = 3.62$

DATA SUMMARY	
Velocity, [fps]	
acfm	
scfm	
dscfm	
Ex Air Free cfm	
Est. MM Btu/hr Heat Input	
Est. Firing Rate, lb/hr	

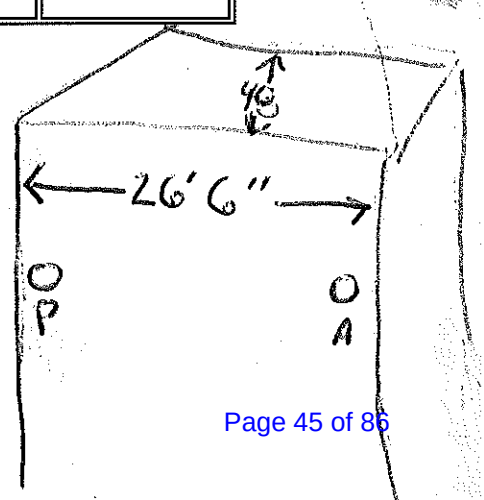

Out B : M4
A : M5

Axial Flow Check

Location	Outlet A	Duct Ht, "		Barometric	
Date	12/4/06	Duct ID,"	48"	Static	-5.8
Time		Duct Area	ft²	Dry Bulb	
Tube I.D.	S-50	% O_2		Wet Bulb	
C-Factor		% CO_2		% H_2O	
Operator(s)	BG, KC	% N_2		W.M.Wt	

PORT/ POINT	DISTANCE velocity [" From Wall]	TEMP [°F]	DELTA P [" H_2O]	VELOCITY [Ft/Sec]	Null Angle	NULL
A - 1	0.42	240	I 1	0.33	252	D2 ≈ 0
2	0.33	240	2	0.38	255	
3	0.22	238	3	0.31	256	
B 1	0.33	240	J 1	0.37	250	F2 ≈ 0
2	0.43	255	2	0.38	260	
3	0.35	235	3	0.28	261	I2 ≈ 0
C 1	0.39	255	K 1	0.23	242	
2	0.37	260	2	0.17	251	K2 ≈ 0
3	0.35	240	3	0.19	254	
D 1	0.36	260	L 1	0.33	253	
2	0.42	265	2	0.31	254	L2 ≈ 0
3	0.38	264	3	0.27	253	
E 1	0.33	253	M 1	0.31	250	M2 ≈ 0
2	0.43	262	2	0.31	252	
3	0.36	249	3	0.29	260	
F 1	0.35	243	N 1	0.29	250	P2 ≈ 0
2	0.23	260	2	0.31	254	
3	0.15	260	3	0.30	254	
G 1	0.37	261	O 1	0.26	246	
2	0.37	259	2	0.31	250	
3	0.36	260	3	0.31	254	
H 1	0.39	254	P 1	0.32	241	
2	0.38	259	2	0.35		
3	0.40	259	3	0.31		
Average						
Maximum			Avg ΔP =	0.327		
Minimum			Avg Ts =	252.7		
SDEV						

Using H-2

DATA SUMMARY	
Velocity, [fps]	
acfm	
scfm	
dscfm	
Ex Air Free cfm	
Est. MM Btu/hr Heat Input	
Est. Firing Rate, lb/hr	

N-5
ΔH@ = 1.951
Y = 1.010
Cp = E-13 - 0.834
Dn = 1 ~~[illegible]~~ = 5/16 B = 0.314
K = 5.98

Test 1

Axial Flow Check

Location	ESP out	Duct Ht, "		Barometric	
Date	12/5/06	Duct ID,"		Static	
Time	935	Duct Area	ft^2	Dry Bulb	
Tube I.D.	S-504	% O_2		Wet Bulb	
C-Factor		% CO_2		% H_2O	
Operator(s)	KG, RW	% N_2		W.M.Wt	

PORT/ POINT	DISTANCE [" From Wall]	TEMP [°F]	DELTA P [" H_2O]	VELOCITY [Ft/Sec]	Null Angle
B - 8		241	0.342		
B - 24		259	0.468		-6.196
B - 40		266	0.377		
D - 8		250	0.374		
-24		262	0.445		-6.266
-40		261	0.406		
F - 8		259	0.371		
-24		259	0.226		-6.063
-40		258	0.161		
G - 8		255	0.399		
-24		265	0.397		-6.179
-40		263	0.367		
J - 8		255	0.400		
-24		261	0.418		-6.109
-40		260	0.315		
L - 8		253	0.405		
-24		254	0.387		-6.269
-40		253	0.383		
M - 8		248	0.471		
-24		252	0.431		-6.343
-40		252	0.428		
O - 8		245	0.323		
-24		249	0.456		-6.250
-40		248	0.419		
Average		255.3	0.378 RMS		-6.209
Maximum					
Minimum					
SDEV					

A

DATA SUMMARY	
Velocity, [fps]	39.82
acfm	253,264
scfm	
dscfm	172,500
Ex Air Free cfm	
Est. MM Btu/hr Heat Input	
Est. Firing Rate, lb/hr	

A duct

Test 1

Axial Flow Check

Location	ESP out	Duct Ht, "		Barometric	
Date	12/5/06	Duct ID,"		Static	
Time	1000 - 1023	Duct Area	ft^2	Dry Bulb	
Tube I.D.	S-50	% O_2		Wet Bulb	
C-Factor		% CO_2		% H_20	
Operator(s)	KO, RW	% N_2		W.M.Wt	

B

PORT/ POINT	DISTANCE [" From Wall]	TEMP [°F]	DELTA P [" H_2O]	VELOCITY [Ft/Sec]	Null Angle
O - 8		254	0.456		
-24		251	0.524		-6.619
-40		257	0.542		
M - 8		260	0.461		
24		261	0.499		-6.353
40		260	0.453		
K - 8		256	0.299		
24		262	0.307		-6.356
40		262	0.281		
I - 8		243	0.424		
-24		270	0.477		-6.326
-40		273	0.395		
G - 8		266	0.448		
-24		272	0.434		-6.368
-40		274	0.398		
F - 8		265	0.464		
-24		269	0.302		-6.291
-40		273	0.241		
D - 8		251	0.381		
-24		273	0.524		-6.540
-40		274	0.480		
B - 8		257	0.437		
-24		280	0.493		-6.288
-40		275	0.413		
Average		264.1	0.418		-6.393
Maximum			RMS		
Minimum					
SDEV					

DATA SUMMARY	
Velocity, [fps]	41.67
acfm	265,028
scfm	
dscfm	180,400
Ex Air Free cfm	
Est. MM Btu/hr Heat Input	
Est. Firing Rate, lb/hr	

12/5/06
1320 - 1340
S-50 A
RW, KG

A Dist
Test 2

0-14	253	0.373	
-30	250	0.440	-6.399
-46	250	0.416	
M-14	252	0.437	
-30	257	0.407	-6.470
-46	256	0.405	
L-14	251	0.408	
-30	253	0.370	-6.330
-46	253	0.374	
J-14	252	0.384	
-30	259	0.420	-6.323
-46	260	0.329	
G-14	259	0.398	
-30	261	0.351	-6.300
-46	256	0.366	
F-14	259	0.374	
-30	260	0.246	-6.299
-46	262	0.153	
D-14	253	0.413	
-30	266	0.458	-6.171
-46	266	0.424	
B-14	254	0.361	
-30	265	0.474	-6.321
-46	258	0.427	
	256.9	0.380	-6.326 avg

V_s = 39.91
ACFM = 253.854
DSCFM = 174.300

Test 2

Axial Flow Check

Location	ESP-Out (B)	Duct Ht, "		Barometric	
Date	12/5/06	Duct ID,"		Static	
Time	1255-1315	Duct Area	ft²	Dry Bulb	
Tube I.D.	S-50 A	% O_2		Wet Bulb	
C-Factor		% CO_2		% H_2O	
Operator(s)	KC, RW	% N_2		W.M.Wt	

PORT/ POINT	DISTANCE [" From Wall]	TEMP [°F]	DELTA P [" H_2O]	VELOCITY [Ft/Sec]	Null Angle
B-14		244	0.410		
30		277	0.494		-6.523
46		275	0.441		
D-14		250	0.396		
-30		275	0.493		-6.378
-46		279	0.485		
F-14		264	0.453		
30		269	0.328		-6.339
46		273	0.227		
G-14		264	0.446		
-30		271	0.427		-6.447
-46		273	0.414		
I-14		257	0.403		
-30		271	0.494		-6.139
-46		274	0.421		
K-14		258	0.343		
-30		261	0.313		-6.360
-46		269	0.239		
M-14		257	0.507		
-30		264	0.525		-6.498
-46		264	0.496		
O-14		257	0.473		
-30		258	0.539		-6.429
-46		259	0.537		
Average		264.9	0.425		-6.394
Maximum			RWS		
Minimum					
SDEV					

B duct

DATA SUMMARY	
Velocity, [fps]	42.02
acfm	267,239
scfm	~~132,880~~
dscfm	132,880
Ex Air Free cfm	
Est. MM Btu/hr Heat Input	
Est. Firing Rate, lb/hr	

Test 3

Axial Flow Check

Location	Out A	Duct Ht, "		Barometric	
Date	12/6/06	Duct ID,"		Static	
Time	915-940	Duct Area	ft^2	Dry Bulb	
Tube I.D.	5-50	% O_2		Wet Bulb	
C-Factor		% CO_2		% H_20	
Operator(s)	Rud, KC	% N_2		W.M.Wt	

PORT/ POINT	DISTANCE [" From Wall]	TEMP [°F]	DELTA P [" H_2O]	VELOCITY [Ft/Sec]	Null Angle
B-14		242	0.342		
-30		255	0.448		-5.927
-46		245	0.379		
D-14		242	0.380		
-30		255	0.417		-5.935
-46		254	0.369		
F-14		249	0.337		
-30		257	0.218		-5.683
-46		251	0.142		
G-14		248	0.371		
-30		257	0.347		-5.804
-46		251	0.358		
J-14		252	0.359		
-30		262	0.387		-5.753
-46		262	0.290		
L-14		257	0.390		
-30		258	0.363		-6.037
-46		257	0.361		
M-14		252	0.369		
-30		255	0.383		-5.761
-46		257	0.371		
O-14		250	0.339		
-30		251	0.421		-5.967
-46		251	0.356		
Average		252.4	0.351 RMC		-5.858
Maximum					
Minimum					
SDEV					

DATA SUMMARY	
Velocity, [fps]	38.27
acfm	243,309
scfm	
dscfm	167,000
Ex Air Free cfm	
Est. MM Btu/hr Heat Input	
Est. Firing Rate, lb/hr	

Test 3

Axial Flow Check

Location	OUT B	Duct Ht, "		Barometric	
Date	12/6/06	Duct ID,"		Static	
Time	945 – 1005	Duct Area	ft^2	Dry Bulb	
Tube I.D.	S-50A	% O_2		Wet Bulb	
C-Factor		% CO_2		% H_20	
Operator(s)	RW, KC	% N_2		W.M.Wt	

PORT/ POINT	DISTANCE [" From Wall]	TEMP [°F]	DELTA P [" H_2O]	VELOCITY [Ft/Sec]	Null Angle
0-14		260	0.440		
-30		258	0.459		-5.909
-46		260	0.480		
M-14		261	0.446		
-30		264	0.469		-6.192
-46		264	0.437		
K-14		261	0.298		
-30		265	0.269		-5.839
-46		266	0.230		
I-14		256	0.413		
-30		268	0.448		-5.832
-46		276	0.380		
G-14		260	0.370		
-30		271	0.363		-5.972
-46		271	0.378		
F-14		261	0.380		
-30		266	0.284		-5.953
-46		271	0.210		
D-14		253	0.364		
-30		270	0.462		-6.104
-46		275	0.410		
B-14		257	0.403		
-30		273	0.483		-6.178
-46		276	0.395		
Average		265.1	0.382 RMS		-5.997
Maximum					
Minimum					
SDEV					

DATA SUMMARY	
Velocity, [fps]	39.87
acfm	253,600
scfm	
dscfm	172,700
Ex Air Free cfm	
Est. MM Btu/hr Heat Input	
Est. Firing Rate, lb/hr	

Test 4

Axial Flow Check

Location	A out	Duct Ht, "		Barometric	
Date	12/6/06	Duct ID,"		Static	
Time	1230 - 1250	Duct Area	ft^2	Dry Bulb	
Tube I.D.	S - 58B	% O_2		Wet Bulb	
C-Factor		% CO_2		% H_20	
Operator(s)	RLO, KC	% N_2		W.M.Wt	

PORT/ POINT	DISTANCE [" From Wall]	TEMP [°F]	DELTA P [" H_2O]	VELOCITY [Ft/Sec]	Null Angle
0 - 14		244	0.366		
-30		244	0.418		-6.000
-46		249	0.398		
M - 14		243	0.383		
-30		247	0.395		-5.861
-46		248	0.368		
L - 14		244	0.405		
-30		249	0.383		-5.713
-46		251	0.357		
J - 14		243	0.373		
30		253	0.371		-5.780
-46		255	0.286		
G - 14		246	0.364		
-30		254	0.361		-5.648
-46		254	0.372		
F - 14		251	0.337		
-30		253	0.222		-5.776
-46		256	0.146		
D - 14		251	0.373		
-30		257	0.427		-5.868
-46		260	0.389		
B - 14		246	0.342		
-30		259	0.456		-6.066
-46		258	0.408		
Average		250.6	0.359		-5.839
Maximum			RMS		
Minimum					
SDEV					

DATA SUMMARY	
Velocity, [fps]	38.66
acfm	245,850
scfm	—
dscfm	170,300
Ex Air Free cfm	
Est. MM Btu/hr Heat Input	
Est. Firing Rate, lb/hr	

Test 4

Axial Flow Check

Location	B out	Duct Ht, "		Barometric	
Date	12/6/06	Duct ID,"		Static	
Time	1210-1230	Duct Area	ft^2	Dry Bulb	
Tube I.D.	S-50 B	% O_2		Wet Bulb	
C-Factor		% CO_2		% H_20	
Operator(s)	RLB, KC	% N_2		W.M.Wt	

PORT/ POINT	DISTANCE [" From Wall]	TEMP [°F]	DELTA P [" H_2O]	VELOCITY [Ft/Sec]	Null Angle
B-14		239	0.389		
30		264	0.459		-6.157
46		268	0.386		
D-14		238	0.407		
-30		263	0.499		-6.100
-46		267	0.456		
F-14		255	0.408		
-30		259	0.292		-6.028
-46		269	0.225		
G-14		260	0.442		
-30		269	0.410		-6.167
-46		270	0.391		
I-14		246	0.438		
-30		260	0.461		-5.896
-46		268	0.403		
K-14		252	0.277		
-30		258	0.270		-6.108
-46		260	0.212		
M-14		254	0.438		
-30		259	0.490		-6.035
-46		262	0.439		
O-14		250	0.439		
-30		251	0.466		-6.209
-46		255	0.465		
Average		258.2	0.394		-6.088
Maximum					
Minimum					
SDEV					

DATA SUMMARY	
Velocity, [fps]	40.21
acfm	256,360
scfm	
dscfm	176,600
Ex Air Free cfm	
Est. MM Btu/hr Heat Input	
Est. Firing Rate, lb/hr	

MITCHELL MPEC PILOT PLANT

Axial Flow Check

Location	A Duct	Duct Ht, "		Barometric	
Date	12/6/06	Duct ID,"	10.0	Static	
Time	1535-1603	Duct Area	0.55 ft^2	Dry Bulb	
Tube I.D.	S-50B	% O_2		Wet Bulb	
C-Factor		% CO_2		% H_2O	
Operator(s)	~~KRC~~-BS	% N_2		W.M.Wt	

A Duct

PORT/ POINT	DISTANCE [" From Wall]	TEMP [°F]	DELTA P [" H_2O]	VELOCITY [Ft/Sec]	Null Angle
~~A-1~~ B-1	~~0.50~~	.30	235		
~~A-2~~ B2	~~1.46~~	.40	250		
~~A-3~~ B-3	~~2.97~~	.37	250		
~~A-4~~ D1	~~7.05~~	.37	240		
~~A-5~~ D2	~~8.56~~	.42	249		
~~A-6~~ D3	~~9.50~~	.36	254		
E1		.34	253		
E2		.25	253		
E3		.16	258		
G1		.34	250		
G2		.37	259		
G3		.32	258		
~~B-1~~ J-1	~~0.50~~	.34	242		
~~B-2~~ J-2	~~1.46~~	.35	256		
~~B-3~~ J-3	~~2.97~~	.30	258		
~~B-4~~ L1	~~7.05~~	.36	252		
~~B-5~~ L2	~~8.56~~	.34	253		
~~B-6~~ L3	~~9.50~~	.35	252		
M1		.38	248		
M2		.39	251		
M3		.38	253		
O1		.32	246		
O2		.39	249		
O3		.36	248		
Average					
Maximum					
Minimum					
SDEV					

5.6
-5.6
5.8
-5.8
-5.7
-5.6
-5.7
-5.7
-5.6
-5.7

DATA SUMMARY	
Velocity, [fps]	
acfm	
scfm	
dscfm	
Ex Air Free cfm	
Est. MM Btu/hr Heat Input	
Est. Firing Rate, lb/hr	

MITCHELL MPEC PILOT PLANT

Axial Flow Check

Location	B-Duct	Duct Ht, "		Barometric	
Date	12/6/06	Duct ID,"	10.0	Static	
Time	1605-1630	Duct Area	0.55 ft^2	Dry Bulb	
Tube I.D.	S-50B	% O_2		Wet Bulb	
C-Factor		% CO_2		% H_2O	
Operator(s)	KRC-BS	% N_2		W.M.Wt	

BOUCT

PORT/ POINT	DISTANCE [" From Wall]	TEMP [°F]	DELTA P [" H_2O]	VELOCITY [Ft/Sec]	Null Angle
01 ~~A-1~~	0.50	.39	254		
02 ~~A-2~~	1.46	.45	252		-5.7
03 ~~A-3~~	2.97	.42	253		
M1 ~~A-4~~	7.05	.38	254		
M2 ~~A-5~~	8.56	.44	257		-5.6
M3 ~~A-6~~	9.50	.43	254		
K1		.25	248		
K2		.23	253		-5.5
K3		.20	253		
I1		.35	247		
I2		.41	260		-5.3
I3		.36	268		
G1 ~~B-1~~	0.50	.32	258		
G2 ~~B-2~~	1.46	.32	264		-5.5
G3 ~~B-3~~	2.97	.32	265		
F1 ~~B-4~~	7.05	.35	255		
F2 ~~B-5~~	8.56	.21	258		-5.4
F3 ~~B-6~~	9.50	.20	264		
D1		.35	249		
D2		.43	264		-5.5
D3		.40	268		
B1		.37	255		
B2		.44	271		-5.7
B3		.36	262		
Average					
Maximum					
Minimum					
SDEV					

DATA SUMMARY	
Velocity, [fps]	
acfm	
scfm	
dscfm	
Ex Air Free cfm	
Est. MM Btu/hr Heat Input	
Est. Firing Rate, lb/hr	

APPENDIX B

Analytical Data

1621-94-000

ANALNUM	DESCR	SAMPLE	COMMENTS	Hg (ng/ml)	Hg (ng/ml)	Average Hg (ng/ml)
20065678	PROBE & FILTER RINSE	2	AHO TEST 1 BG/RS	2.5	2.4	2.5
20065679	HEATED LINE RINSE	3	AHO TEST 1 BG/RS	19.8	20.5	20.2
20065680	KCL IMPINGERS	4	AHO TEST 1 BG/RS	23.4	23.8	23.6
20065681	HNO3/H2O2 IMPINGER	5	AHO TEST 1 BG/RS	2.9	3.0	3.0
20065682	KMNO4 IMPINGER	6	AHO TEST 1 BG/RS	3.0	3.0	3.0
20065683	KMNO4 ACID RINSE	7	AHO TEST 1 BG/RS	< 1.0	< 1.0	< 1.0
20065684	PROBE & FILTER RINSE	9	ESPO-A TEST 1 BS/KC/RO	< 1.0	< 1.0	< 1.0
20065685	KCL IMPINGER	10	ESPO-A TEST 1 BS/KC/RO	40.8	41.7	43.7
20065686	HNO3/H2O2 IMPINGER	11	ESPO-A TEST 1 BS/KC/RO	2.2	2.0	2.1
20065687	KMNO4 IMPINGER	12	ESPO-A TEST 1 BS/KC/RO	18.4	18.7	18.6
20065688	KMNO4 ACID RINSE	13	ESPO-A TEST 1 BS/KC/RO	< 1.0	< 1.0	< 1.0
20065689	PROBE & FILTER RINSE	15	ESPO-B TEST 1 BS/KC/RO	< 1.0	< 1.0	< 1.0
20065690	KCL IMPINGER	16	ESPO-B TEST 1 BS/KC/RO	40.5	40.4	40.5
20065691	HNO3/H2O2 IMPINGER	17	ESPO-B TEST 1 BS/KC/RO	2.0	2.1	2.1
20065692	KMNO4 IMPINGER	18	ESPO-B TEST 1 BS/KC/RO	14.8	15.0	14.9
20065693	KMNO4 ACID RINSE	19	ESPO-B TEST 1 BS/KC/RO	< 1.0	< 1.0	< 1.0
20065694	PROBE & FILTER RINSE	21	AHO TEST 2 BG/RS	3.6	3.7	3.7
20065695	HEATED LINE RINSE	22	AHO TEST 2 BG/RS	5.6	5.3	5.5
20065696	KCL IMPINGER	23	AHO TEST 2 BG/RS	29.7	29.4	29.6
20065697	HNO3/H2O2 IMPINGER	24	AHO TEST 2 BG/RS	< 1.0	< 1.0	< 1.0
20065698	KMNO4 IMPINGER	25	AHO TEST 2 BG/RS	4.2	4.0	4.1
20065699	KMNO4 ACID RINSE	26	AHO TEST 2 BG/RS	< 1.0	< 1.0	< 1.0
20065700	PROBE & FILTER RINSE	28	ESPO-A TEST 2 BS/KC/RO	< 1.0	< 1.0	< 1.0
20065701	KCL IMPINGER	29	ESPO-A TEST 2 BS/KC/RO	44.2	43.5	43.9
20065702	HNO3/H2O2 IMPINGER	30	ESPO-A TEST 2 BS/KC/RO	2.9	2.7	2.8
20065703	KMNO4 IMPINGER	31	ESPO-A TEST 2 BS/KC/RO	12.4	12.5	12.5
20065704	KMNO4 ACID RINSE	32	ESPO-A TEST 2 BS/KC/RO	< 1.0	< 1.0	< 1.0
20065705	PROBE & FILTER RINSE	34	ESPO-B TEST 2 BS/KC/RO	< 1.0	< 1.0	< 1.0
20065706	KCL IMPINGER	35	ESPO-B TEST 2 BS/KC/RO	38.9	38.1	38.5
20065707	HNO3/H2O2 IMPINGER	36	ESPO-B TEST 2 BS/KC/RO	3.2	3.3	3.3
20065708	KMNO4 IMPINGER	37	ESPO-B TEST 2 BS/KC/RO	20.1	19.3	19.7
20065709	KMNO4 ACID RINSE	38	ESPO-B TEST 2 BS/KC/RO	< 1.0	< 1.0	< 1.0

1621-94-000

ANALNUM	DESCR	SAMPLE	COMMENTS	Hg (ng/ml)	Hg (ng/ml)	Average Hg (ng/ml)
20065710	PROBE & FILTER RINSE	40	AHO TEST 3 BG/RS	2.6	2.4	2.5
20065711	HEATED LINE RINSE	41	AHO TEST 3 BG/RS	9.0	8.9	9.0
20065712	KCL IMPINGER	42	AHO TEST 3 BG/RS	15.0	15.6	15.3
20065713	HNO3/H2O2 IMPINGER	43	AHO TEST 3 BG/RS	< 1.0	< 1.0	< 1.0
20065714	KMNO4 IMPINGER	44	AHO TEST 3 BG/RS	1.0	1.0	1.0
20065715	KMNO4 ACID RINSE	45	AHO TEST 3 BG/RS	< 1.0	< 1.0	< 1.0
20065716	PROBE & FILTER RINSE	47	ESPO-A TEST 3 BS/KC/RO	< 1.0	< 1.0	< 1.0
20065717	KCL IMPINGER	48	ESPO-A TEST 3 BS/KC/RO	24.9	24.9	24.9
20065718	HNO3/H2O2 IMPINGER	49	ESPO-A TEST 3 BS/KC/RO	< 1.0	< 1.0	< 1.0
20065719	KMNO4 IMPINGER	50	ESPO-A TEST 3 BS/KC/RO	13.0	13.1	13.1
20065720	KMNO4 ACID RINSE	51	ESPO-A TEST 3 BS/KC/RO	< 1.0	< 1.0	< 1.0
20065721	PROBE & FILTER RINSE	53	ESPO-B TEST 3 BS/KC/RO	< 1.0	< 1.0	< 1.0
20065722	KCL IMPINGER	54	ESPO-B TEST 3 BS/KC/RO	23.1	23.5	23.3
20065723	HNO3/H2O2 IMPINGER	55	ESPO-B TEST 3 BS/KC/RO	< 1.0	< 1.0	< 1.0
20065724	KMNO4 IMPINGER	56	ESPO-B TEST 3 BS/KC/RO	8.9	8.7	8.8
20065725	KMNO4 ACID RINSE	57	ESPO-B TEST 3 BS/KC/RO	< 1.0	< 1.0	< 1.0
20065726	PROBE & FILTER RINSE	59	AHO TEST 4 BG/RS	3.5	3.6	3.6
20065727	HEATED LINE RINSE	60	AHO TEST 4 BG/RS	11.4	11.1	11.3
20065728	KCL IMPINGER	61	AHO TEST 4 BG/RS	9.2	9.0	9.1
20065729	HNO3/H2O2 IMPINGER	62	AHO TEST 4 BG/RS	< 1.0	< 1.0	< 1.0
20065730	KMNO4 IMPINGER	63	AHO TEST 4 BG/RS	0.7	0.6	0.7
20065731	KMNO4 ACID RINSE	64	AHO TEST 4 BG/RS	< 1.0	< 1.0	< 1.0
20065732	PROBE & FILTER RINSE	66	ESPO-A TEST 4 BS/KC/RO	< 1.0	< 1.0	< 1.0
20065733	KCL IMPINGER	67	ESPO-A TEST 4 BS/KC/RO	23.4	22.9	23.2
20065734	HNO3/H2O2 IMPINGER	68	ESPO-A TEST 4 BS/KC/RO	< 1.0	< 1.0	< 1.0
20065735	KMNO4 IMPINGER	69	ESPO-A TEST 4 BS/KC/RO	12.0	12.0	12.0
20065736	KMNO4 ACID RINSE	70	ESPO-A TEST 4 BS/KC/RO	< 1.0	< 1.0	< 1.0
20065737	PROBE & FILTER RINSE	72	ESPO-B TEST 4 BS/KC/RO	< 1.0	< 1.0	< 1.0
20065738	KCL IMPINGER	73	ESPO-B TEST 4 BS/KC/RO	21.9	21.4	21.7
20065739	HNO3/H2O2 IMPINGER	74	ESPO-B TEST 4 BS/KC/RO	1.1	1.2	1.2
20065740	KMNO4 IMPINGER	75	ESPO-B TEST 4 BS/KC/RO	10.1	10.1	10.1
20065741	KMNO4 ACID RINSE	76	ESPO-B TEST 4 BS/KC/RO	< 1.0	< 1.0	< 1.0
20065742	KCL IMPINGER	77		< 0.2	< 0.2	< 0.2
20065743	HNO3/H2O2 IMPINGER	78		< 1.0	< 1.0	< 1.0
20065744	KMNO4 IMPINGER	79		< 0.2	< 0.2	< 0.2
20065745	KMNO4 ACID RINSE	80		< 1.0	< 1.0	< 1.0
20065746	KMNO4 BLANK	83		< 0.2	< 0.2	< 0.2
20065747	KMNO4 BLANK	84		< 0.2	< 0.2	< 0.2
20065748	HNO3/HCL BLANK	85		< 1.0	< 1.0	< 1.0
20065749	H2O BLANK	86		< 1.0	< 1.0	< 1.0
20065750	HNO3/H2O2 BLANK	87		< 1.0	< 1.0	< 1.0
20065751	KCL BLANK	88		< 0.2	< 0.2	< 0.2

Loose Particulate in Thimbles Analyzed by D 6722, Direct Combustion

Analytical No.	Description	Sample	Hg, ppm
20065664	FILTER/SOLIDS 1 of 2	1	0.649
20065664	FILTER/SOLIDS 2 of 2	1	0.683
20065667	FILTER/SOLIDS 1 of 2	20	0.559
20065667	FILTER/SOLIDS 2 of 2	20	0.600
20065670	FILTER/SOLIDS	39	0.567
20065673	FILTER/SOLIDS	58	0.560

NIST SRM 1633b		(Limit of 10%)	
1633b is certified at 0	**HG ng/mg or ppm**	**% Recovery**	
1633B	0.136	96%	

Filters Analyzed by Acid Digestion, CVAA

ANALNUM	DESCR	SAMPLE	ng/filter
20065665	FILTER/SOLIDS	8	12.6
20065666	FILTER/SOLIDS	14	6.0
20065668	FILTER/SOLIDS	27	5.0
20065669	FILTER/SOLIDS	33	< 5.0
20065671	FILTER/SOLIDS	46	< 5.0
20065672	FILTER/SOLIDS	52	< 5.0
20065674	FILTER/SOLIDS	65	< 5.0
20065675	FILTER/SOLIDS	71	5.6
20065676	3 IN FILTER BLANK	81	13.4
20065677	THIMBLE BLANK	82	6.3

NIST SRM 1633b		(Limit of 10%)	
1633b is certified at 0	**HG ng/mg**	**% Recovery**	
1633B	0.135	96%	

Mercury Duplicate Analyses RPD (Limit of 10%)

ANALNUM	DESCR	SAMPLE	COMMENTS	Hg (ng/ml)	Hg (ng/ml)	RPD, %
20065678	PROBE & FILTER RINSE	2	AHO TEST 1 BG/RS	2.5	2.4	4.0%
20065679	HEATED LINE RINSE	3	AHO TEST 1 BG/RS	19.8	20.5	3.5%
20065680	KCL IMPINGERS	4	AHO TEST 1 BG/RS	23.4	23.8	1.7%
20065681	HNO3/H2O2 IMPINGER	5	AHO TEST 1 BG/RS	2.9	3.0	3.4%
20065682	KMNO4 IMPINGER	6	AHO TEST 1 BG/RS	3.0	3.0	0.0%
20065683	KMNO4 ACID RINSE	7	AHO TEST 1 BG/RS	< 1.0	< 1.0	0.0%
20065684	PROBE & FILTER RINSE	9	ESPO-A TEST 1 BS/KC/RO	< 1.0	< 1.0	0.0%
20065685	KCL IMPINGER	10	ESPO-A TEST 1 BS/KC/RO	40.8	41.7	2.2%
20065686	HNO3/H2O2 IMPINGER	11	ESPO-A TEST 1 BS/KC/RO	2.2	2.0	9.5%
20065687	KMNO4 IMPINGER	12	ESPO-A TEST 1 BS/KC/RO	18.4	18.7	1.6%
20065688	KMNO4 ACID RINSE	13	ESPO-A TEST 1 BS/KC/RO	< 1.0	< 1.0	0.0%
20065689	PROBE & FILTER RINSE	15	ESPO-B TEST 1 BS/KC/RO	< 1.0	< 1.0	0.0%
20065690	KCL IMPINGER	16	ESPO-B TEST 1 BS/KC/RO	40.5	40.4	0.2%
20065691	HNO3/H2O2 IMPINGER	17	ESPO-B TEST 1 BS/KC/RO	2.0	2.1	4.9%
20065692	KMNO4 IMPINGER	18	ESPO-B TEST 1 BS/KC/RO	14.8	15.0	1.3%
20065693	KMNO4 ACID RINSE	19	ESPO-B TEST 1 BS/KC/RO	< 1.0	< 1.0	0.0%
20065694	PROBE & FILTER RINSE	21	AHO TEST 2 BG/RS	3.6	3.7	2.7%
20065695	HEATED LINE RINSE	22	AHO TEST 2 BG/RS	5.6	5.3	5.5%
20065696	KCL IMPINGER	23	AHO TEST 2 BG/RS	29.7	29.4	1.0%
20065697	HNO3/H2O2 IMPINGER	24	AHO TEST 2 BG/RS	< 1.0	< 1.0	0.0%
20065698	KMNO4 IMPINGER	25	AHO TEST 2 BG/RS	4.2	4.0	4.9%
20065699	KMNO4 ACID RINSE	26	AHO TEST 2 BG/RS	< 1.0	< 1.0	0.0%
20065700	PROBE & FILTER RINSE	28	ESPO-A TEST 2 BS/KC/RO	< 1.0	< 1.0	0.0%
20065701	KCL IMPINGER	29	ESPO-A TEST 2 BS/KC/RO	44.2	43.5	1.6%
20065702	HNO3/H2O2 IMPINGER	30	ESPO-A TEST 2 BS/KC/RO	2.9	2.7	7.1%
20065703	KMNO4 IMPINGER	31	ESPO-A TEST 2 BS/KC/RO	12.4	12.5	0.8%
20065704	KMNO4 ACID RINSE	32	ESPO-A TEST 2 BS/KC/RO	< 1.0	< 1.0	0.0%
20065705	PROBE & FILTER RINSE	34	ESPO-B TEST 2 BS/KC/RO	< 1.0	< 1.0	0.0%
20065706	KCL IMPINGER	35	ESPO-B TEST 2 BS/KC/RO	38.9	38.1	2.1%
20065707	HNO3/H2O2 IMPINGER	36	ESPO-B TEST 2 BS/KC/RO	3.2	3.3	3.1%
20065708	KMNO4 IMPINGER	37	ESPO-B TEST 2 BS/KC/RO	20.1	19.3	4.1%
20065709	KMNO4 ACID RINSE	38	ESPO-B TEST 2 BS/KC/RO	< 1.0	< 1.0	0.0%
20065710	PROBE & FILTER RINSE	40	AHO TEST 3 BG/RS	2.6	2.4	8.0%
20065711	HEATED LINE RINSE	41	AHO TEST 3 BG/RS	9.0	8.9	1.1%
20065712	KCL IMPINGER	42	AHO TEST 3 BG/RS	15.0	15.6	3.9%
20065713	HNO3/H2O2 IMPINGER	43	AHO TEST 3 BG/RS	< 1.0	< 1.0	0.0%
20065714	KMNO4 IMPINGER	44	AHO TEST 3 BG/RS	1.0	1.0	0.0%
20065715	KMNO4 ACID RINSE	45	AHO TEST 3 BG/RS	< 1.0	< 1.0	0.0%
20065716	PROBE & FILTER RINSE	47	ESPO-A TEST 3 BS/KC/RO	< 1.0	< 1.0	0.0%
20065717	KCL IMPINGER	48	ESPO-A TEST 3 BS/KC/RO	24.9	24.9	0.0%
20065718	HNO3/H2O2 IMPINGER	49	ESPO-A TEST 3 BS/KC/RO	< 1.0	< 1.0	0.0%
20065719	KMNO4 IMPINGER	50	ESPO-A TEST 3 BS/KC/RO	13.0	13.1	0.8%
20065720	KMNO4 ACID RINSE	51	ESPO-A TEST 3 BS/KC/RO	< 1.0	< 1.0	0.0%
20065721	PROBE & FILTER RINSE	53	ESPO-B TEST 3 BS/KC/RO	< 1.0	< 1.0	0.0%
20065722	KCL IMPINGER	54	ESPO-B TEST 3 BS/KC/RO	23.1	23.5	1.7%
20065723	HNO3/H2O2 IMPINGER	55	ESPO-B TEST 3 BS/KC/RO	< 1.0	< 1.0	0.0%
20065724	KMNO4 IMPINGER	56	ESPO-B TEST 3 BS/KC/RO	8.9	8.7	2.3%
20065725	KMNO4 ACID RINSE	57	ESPO-B TEST 3 BS/KC/RO	< 1.0	< 1.0	0.0%
20065726	PROBE & FILTER RINSE	59	AHO TEST 4 BG/RS	3.5	3.6	2.8%
20065727	HEATED LINE RINSE	60	AHO TEST 4 BG/RS	11.4	11.1	2.7%
20065728	KCL IMPINGER	61	AHO TEST 4 BG/RS	9.2	9.0	2.2%
20065729	HNO3/H2O2 IMPINGER	62	AHO TEST 4 BG/RS	< 1.0	< 1.0	0.0%
20065730	KMNO4 IMPINGER	63	AHO TEST 4 BG/RS	0.7	0.6	15.4%
20065731	KMNO4 ACID RINSE	64	AHO TEST 4 BG/RS	< 1.0	< 1.0	0.0%
20065732	PROBE & FILTER RINSE	66	ESPO-A TEST 4 BS/KC/RO	< 1.0	< 1.0	0.0%
20065733	KCL IMPINGER	67	ESPO-A TEST 4 BS/KC/RO	23.4	22.9	2.2%
20065734	HNO3/H2O2 IMPINGER	68	ESPO-A TEST 4 BS/KC/RO	< 1.0	< 1.0	0.0%
20065735	KMNO4 IMPINGER	69	ESPO-A TEST 4 BS/KC/RO	12.0	12.0	0.0%
20065736	KMNO4 ACID RINSE	70	ESPO-A TEST 4 BS/KC/RO	< 1.0	< 1.0	0.0%
20065737	PROBE & FILTER RINSE	72	ESPO-B TEST 4 BS/KC/RO	< 1.0	< 1.0	0.0%
20065738	KCL IMPINGER	73	ESPO-B TEST 4 BS/KC/RO	21.9	21.4	2.3%
20065739	HNO3/H2O2 IMPINGER	74	ESPO-B TEST 4 BS/KC/RO	1.1	1.2	8.7%
20065740	KMNO4 IMPINGER	75	ESPO-B TEST 4 BS/KC/RO	10.1	10.1	0.0%
20065741	KMNO4 ACID RINSE	76	ESPO-B TEST 4 BS/KC/RO	< 1.0	< 1.0	0.0%
20065742	KCL IMPINGER	77		< 0.2	< 0.2	0.0%
20065743	HNO3/H2O2 IMPINGER	78		< 1.0	< 1.0	0.0%
20065744	KMNO4 IMPINGER	79		< 0.2	< 0.2	0.0%
20065745	KMNO4 ACID RINSE	80		< 1.0	< 1.0	0.0%
20065746	KMNO4 BLANK	83		< 0.2	< 0.2	0.0%
20065747	KMNO4 BLANK	84		< 0.2	< 0.2	0.0%
20065748	HNO3/HCL BLANK	85		< 1.0	< 1.0	0.0%
20065749	H2O BLANK	86		< 1.0	< 1.0	0.0%
20065750	HNO3/H2O2 BLANK	87		< 1.0	< 1.0	0.0%
20065751	KCL BLANK	88		< 0.2	< 0.2	0.0%

Mercury Triplicate Analyses RSD (Limit of 10%)

ANALNUM	DESCR	SAMPLE	COMMENTS	Hg (ng/ml)	Hg (ng/ml)	Hg (ng/ml)	RSD (%)
20065694	PROBE & FILTER RINSE	21	AHO TEST 2 BG/RS	3.6	3.7	3.4	4.3%
20065737	PROBE & FILTER RINSE	72	ESPO-B TEST 4 BS/KC/RO	< 1.0	< 1.0	< 1.0	0.0%
20065699	KMNO4 ACID RINSE	26	AHO TEST 2 BG/RS	< 1.0	< 1.0	< 1.0	0.0%
20065741	KMNO4 ACID RINSE	76	ESPO-B TEST 4 BS/KC/RO	< 1.0	< 1.0	< 1.0	0.0%
20065711	HEATED LINE RINSE	41	AHO TEST 3 BG/RS	9.0	8.9	9.3	2.3%
20065750	HNO3/H2O2 BLANK	87		< 1.0	< 1.0	< 1.0	0.0%
20065729	HNO3/H2O2 IMPINGER	62	AHO TEST 4 BG/RS	< 1.0	< 1.0	< 1.0	0.0%
20065696	KCL IMPINGER	23	AHO TEST 2 BG/RS	29.7	29.4	29.4	0.6%
20065738	KCL IMPINGER	73	ESPO-B TEST 4 BS/KC/RO	21.9	21.4	20.9	2.3%
20065680	KCL IMPINGERS	4	AHO TEST 1 BG/RS	23.4	23.8	23.7	0.9%
20065740	KMNO4 IMPINGER	75	ESPO-B TEST 4 BS/KC/RO	10.1	10.1	10.3	1.1%
20065719	KMNO4 IMPINGER	50	ESPO-A TEST 3 BS/KC/RO	13.0	13.1	13.1	0.4%

Matrix (Standard Addition) Spikes

The following samples were spiked with a standard solution of 2ppb.

ANALNUM	DATE	DESCR	SAMPLE	% Recovery
20065700	PROBE & FILTER RINSE	28	ESPO-A TEST 2 BS/KC/RO	99.5
20065721	PROBE & FILTER RINSE	53	ESPO-B TEST 3 BS/KC/RO	99.5
20065704	KMNO4 ACID RINSE	32	ESPO-A TEST 2 BS/KC/RO	94.5
20065725	KMNO4 ACID RINSE	57	ESPO-B TEST 3 BS/KC/RO	100
20065697	HNO3/H2O2 IMPINGER	24	AHO TEST 2 BG/RS	100
20065727	HEATED LINE RINSE	60	AHO TEST 4 BG/RS	99
20065734	HNO3/H2O2 IMPINGER	68	ESPO-A TEST 4 BS/KC/RO	108
20065744	KMNO4 IMPINGER	79		107
20065701	KCL IMPINGER	29	ESPO-A TEST 2 BS/KC/RO	100
20065733	KCL IMPINGER	67	ESPO-A TEST 4 BS/KC/RO	103
20065682	KMNO4 IMPINGER	6	AHO TEST 1 BG/RS	107
20065714	KMNO4 IMPINGER	44	AHO TEST 3 BG/RS	110

Digestion Duplicates and Digestion Spikes

Digestion 1 and 2 results represent an average of duplicate analyses.

ANALNUM	DATE	DESCR	SAMPLE	Digestion 1	Digestion 2	RPD, %
20065710	PROBE & FILTER RINSE	40	AHO TEST 3 BG/RS	2.5	2.4	4.0
20065687	KMNO4 IMPINGER	12	ESPO-A TEST 1 BS/KC/RO	18.6	19.2	3.2
20065712	KCL IMPINGER	42	AHO TEST 3 BG/RS	15.3	15.3	0.0

The following samples were spiked with a standard solution of 2 or 5 ppb before digestion.

ANALNUM	DATE	DESCR	SAMPLE	% Recovery
20065710	PROBE & FILTER RINSE	40	AHO TEST 3 BG/RS	103
20065687	KMNO4 IMPINGER	12	ESPO-A TEST 1 BS/KC/RO	105
20065712	KCL IMPINGER	42	AHO TEST 3 BG/RS	108

Distribution: Green / Locke
Project No.: 1621-94
Sample Date: 12-5-06

Location: AHO-ESP1N Task: _____ Test: 1 Operator: BG/RS

*Back flushed impinger

Sample ID	Bottle #	Description	Initial Vol mL	Rinse Vol mL	Gain mL	Final Vol mL	ppb Hg	Total ug of Hg
1	S	Filter/Solids						
2	1A	Probe & Filter Rinse	—	105	—	105		
3	1B	Heated Line Rinse	—	110	—	110		
4	2	KCl Impingers	300	~~[illegible]~~ 150	186	636		
5	3	HNO_3/H_2O_2 Impinger	100	75	0	175		
6	4	$KMnO_4$ Impingers	200	50	-120	130		
7	5	$KMnO_4$ Acid Rinse	—	100	—	100		

Filter Gross wt: _____ g Filter Net wt: _____ g
Filter Tare wt: _____ g Probe/Line Rinse wt: _____ g Condensate Total: _____ ml
Filter Net wt: _____ g Total Particulate wt: _____ g

Recovered By: [signature] Date: 12/5/06

Location: ESP0-A Task: — Test: 1 Operator: BS/KC/RO

Sample ID	Bottle #	Description	Initial Vol mL	Rinse Vol mL	Gain mL	Final Vol mL	ppb Hg	Total ug of Hg
8	S	Filter/Solids						
9	1A	Probe & Filter Rinse	—	92	—	92		
—	1B	Heated Line Rinse	—	—	—	—		
10	2	KCl Impingers	300	150	94	544		
11	3	HNO_3/H_2O_2 Impinger	100	75	4	179		
12	4	$KMnO_4$ Impingers	200	50	5	255		
13	5	$KMnO_4$ Acid Rinse	—	100	—	100		

Filter Gross wt: _____ g Filter Net wt: _____ g
Filter Tare wt: _____ g Probe/Line Rinse wt: _____ g Condensate Total: _____ ml
Filter Net wt: _____ g Total Particulate wt: _____ g

Recovered By: [signature] Date: 12/5/06

Location: ESP0-B Task: — Test: 1 Operator: BS/KC/RO

Sample ID	Bottle #	Description	Initial Vol mL	Rinse Vol mL	Gain mL	Final Vol mL	ppb Hg	Total ug of Hg
14	S	Filter/Solids						
15	1A	Probe & Filter Rinse	—	95	—	95		
—	1B	Heated Line Rinse	—	—	—	—		
16	2	KCl Impingers	300	150	64	514		
17	3	HNO_3/H_2O_2 Impinger	100	75	0	175		
18	4	$KMnO_4$ Impingers	200	50	0	250		
19	5	$KMnO_4$ Acid Rinse	—	100	—	100		

Filter Gross wt: _____ g Filter Net wt: _____ g
Filter Tare wt: _____ g Probe/Line Rinse wt: _____ g Condensate Total: _____ ml
Filter Net wt: _____ g Total Particulate wt: _____ g

Recovered By: [signature] Date: 12/5/06

Sample ID	Description	ppb Hg	Total ug of Hg
	3 in. Filter Blank		
	Thimble Blank		
	KCl Blank		
	HNO_3 / H2O2 Blank		
23	$KMnO_4$ Blank		
	HNO_3 / HCl Blank		

Distribution: Green / Rocko
Project No.: 1621-984
Sample Date: 12-5-06

Location: AHO Task: — Test: 2 Operator: BG / RS

Sample ID	Bottle #	Description	Initial Vol mL	Rinse Vol mL	Gain mL	Final Vol mL	ppb Hg	Total ug of Hg
20	S	Filter/Solids						
21	1A	Probe & Filter Rinse	—	100	—	100		
22	1B	Heated Line Rinse	—	100	—	100		
23	2	KCl Impingers	300	150	48	498		
24	3	HNO_3/H_2O_2 Impinger	100	75	0	175		
25	4	$KMnO_4$ Impingers	200	50	-2	248		
26	5	$KMnO_4$ Acid Rinse	—	— 100	—	100		

Filter Gross wt: _____g Filter Net wt: _____g
Filter Tare wt: _____g Probe/Line Rinse wt: _____g Condensate Total: _____ml
Filter Net wt: _____g Total Particulate wt: _____g

Recovered By: [signature] Date: 12/5/06

Location: ESPO-A Task: — Test: 2 Operator: BS/KC/RO

Sample ID	Bottle #	Description	Initial Vol mL	Rinse Vol mL	Gain mL	Final Vol mL	ppb Hg	Total ug of Hg
27	S	Filter/Solids						
28	1A	Probe & Filter Rinse	—	95	—	95		
—	1B	Heated Line Rinse	—	—	—	—		
29	2	KCl Impingers	300	150	76	526		
30	3	HNO_3/H_2O_2 Impinger	100	75	2	177		
31	4	$KMnO_4$ Impingers	200	50	3	253		
32	5	$KMnO_4$ Acid Rinse	—	100	—	100		

Filter Gross wt: _____g Filter Net wt: _____g
Filter Tare wt: _____g Probe/Line Rinse wt: _____g Condensate Total: _____ml
Filter Net wt: _____g Total Particulate wt: _____g

Recovered By: [signature] Date: _____

Location: ESPO-B Task: — Test: 2 Operator: BS/KC/RO

Sample ID	Bottle #	Description	Initial Vol mL	Rinse Vol mL	Gain mL	Final Vol mL	ppb Hg	Total ug of Hg
33	S	Filter/Solids						
34	1A	Probe & Filter Rinse	—	140	—	140		
—	1B	Heated Line Rinse	—	—	—	—		
35	2	KCl Impingers	300	150	63	513		
36	3	HNO_3/H_2O_2 Impinger	100	75	2	177		
37	4	$KMnO_4$ Impingers	200	50	0	250		
38	5	$KMnO_4$ Acid Rinse	—	100	—	100		

Filter Gross wt: _____g Filter Net wt: _____g
Filter Tare wt: _____g Probe/Line Rinse wt: _____g Condensate Total: _____ml
Filter Net wt: _____g Total Particulate wt: _____g

Recovered By: [signature] Date: 12/5/06

Sample ID	Description	ppb Hg	Total ug of Hg
	3 in. Filter Blank		
	Thimble Blank		
	KCl Blank		
	HNO_3 / H2O2 Blank		
	$KMnO_4$ Blank		
	HNO_3 / HCl Blank		

Distribution: Green / Locke
Project No.: 1621-94
Sample Date: 12-6-06

Location: AHO Task: — Test: 3 Operator: BG / RS

Sample ID	Bottle #	Description	Initial Vol mL	Rinse Vol mL	Gain mL	Final Vol mL	ppb Hg	Total ug of Hg
39	S	Filter/Solids						
40	1A	Probe & Filter Rinse	—	111	—	111		
41	1B	Heated Line Rinse	—	83	—	83		
42	2	KCl Impingers	300	150	62	512		
43	3	HNO_3/H_2O_2 Impinger	100	75	4	179		
44	4	$KMnO_4$ Impingers	200	50	-3	247		
45	5	$KMnO_4$ Acid Rinse	—	100	—	100		

Filter Gross wt: _____ g Filter Net wt: _____ g
Filter Tare wt: _____ g Probe/Line Rinse wt: _____ g Condensate Total: _____ ml
Filter Net wt: _____ g Total Particulate wt: _____ g

Recovered By: [signature] Date: 12/6/06

Location: ESPO-A Task: — Test: 3 Operator: BS/KC/RO

Sample ID	Bottle #	Description	Initial Vol mL	Rinse Vol mL	Gain mL	Final Vol mL	ppb Hg	Total ug of Hg
46	S	Filter/Solids						
47	1A	Probe & Filter Rinse	—	88	—	88		
—	1B	Heated Line Rinse	—	—	—	—		
48	2	KCl Impingers	300	150	98	548		
49	3	HNO_3/H_2O_2 Impinger	100	75	10	185		
50	4	$KMnO_4$ Impingers	200	50	0	250		
51	5	$KMnO_4$ Acid Rinse	—	100	—	100		

Filter Gross wt: _____ g Filter Net wt: _____ g
Filter Tare wt: _____ g Probe/Line Rinse wt: _____ g Condensate Total: _____ ml
Filter Net wt: _____ g Total Particulate wt: _____ g

Recovered By: [signature] Date: 12/6/06

Location: ESPO-B Task: — Test: 3 Operator: BS/KC/RO

Sample ID	Bottle #	Description	Initial Vol mL	Rinse Vol mL	Gain mL	Final Vol mL	ppb Hg	Total ug of Hg
52	S	Filter/Solids						
53	1A	Probe & Filter Rinse	—	178	—	178		
—	1B	Heated Line Rinse	—	—	—	—		
54	2	KCl Impingers	300	150	76	526		
55	3	HNO_3/H_2O_2 Impinger	100	75	4	179		
56	4	$KMnO_4$ Impingers	200	50	-2	248		
57	5	$KMnO_4$ Acid Rinse	—	100	—	100		

Filter Gross wt: _____ g Filter Net wt: _____ g
Filter Tare wt: _____ g Probe/Line Rinse wt: _____ g Condensate Total: _____ ml
Filter Net wt: _____ g Total Particulate wt: _____ g

Recovered By: [signature] Date: 12/6/06

Sample ID	Description	ppb Hg	Total ug of Hg
	3 in. Filter Blank		
	Thimble Blank		
	KCl Blank		
	HNO_3 / H2O2 Blank		
	$KMnO_4$ Blank		
	HNO_3 / HCl Blank		

Distribution: Green/Locke
Project No.: 1621-94
Sample Date: 12-6-06

Location: AHO Task: — Test: 4 Operator: BG/RS

Sample ID	Bottle #	Description	Initial Vol mL	Rinse Vol mL	Gain mL	Final Vol mL	ppb Hg	Total ug of Hg
58	S	Filter/Solids						
59	1A	Probe & Filter Rinse	—	85	—	85		
60	1B	Heated Line Rinse	—	63	—	63		
61	2	KCl Impingers	300	150	48	498		
62	3	HNO_3/H_2O_2 Impinger	100	75	2	177		
63	4	$KMnO_4$ Impingers	200	50	-6	244		
64	5	$KMnO_4$ Acid Rinse	—	100	—	100		

Filter Gross wt: _____g Filter Net wt: _____g
Filter Tare wt: _____g Probe/Line Rinse wt: _____g Condensate Total: _____ml
Filter Net wt: _____g Total Particulate wt: _____g

Recovered By: [signature] Date: 12/7/06

Location: ESP0-A Task: — Test: 4 Operator: BS/KC/RO

Sample ID	Bottle #	Description	Initial Vol mL	Rinse Vol mL	Gain mL	Final Vol mL	ppb Hg	Total ug of Hg
65	S	Filter/Solids						
66	1A	Probe & Filter Rinse	—	107	—	107		
~~67~~	1B	Heated Line Rinse	—	—	—	—		
67	2	KCl Impingers	300	150	82	532		
68	3	HNO_3/H_2O_2 Impinger	100	75	-6	181		
69	4	$KMnO_4$ Impingers	200	50	2	252		
70	5	$KMnO_4$ Acid Rinse	—	100	—	100		

Filter Gross wt: _____g Filter Net wt: _____g
Filter Tare wt: _____g Probe/Line Rinse wt: _____g Condensate Total: _____ml
Filter Net wt: _____g Total Particulate wt: _____g

Recovered By: [signature] Date: 12/7/06

Location: ESP0-B Task: — Test: 4 Operator: BS/KC/RO

Sample ID	Bottle #	Description	Initial Vol mL	Rinse Vol mL	Gain mL	Final Vol mL	ppb Hg	Total ug of Hg
71	S	Filter/Solids						
72	1A	Probe & Filter Rinse	—	100	—	100		
—	1B	Heated Line Rinse	—	—	—	—		
73	2	KCl Impingers	300	150	75	525		
74	3	HNO_3/H_2O_2 Impinger	100	75	4	179		
75	4	$KMnO_4$ Impingers	200	50	-4	246		
76	5	$KMnO_4$ Acid Rinse	—	100	—	100		

Filter Gross wt: _____g Filter Net wt: _____g
Filter Tare wt: _____g Probe/Line Rinse wt: _____g Condensate Total: _____ml
Filter Net wt: _____g Total Particulate wt: _____g

Recovered By: [signature] Date: 12/7/06

Sample ID	Description	ppb Hg	Total ug of Hg
	3 in. Filter Blank		
	Thimble Blank		
	KCl Blank		
	HNO_3 / H2O2 Blank		
	$KMnO_4$ Blank		
	HNO_3 / HCl Blank		

Distribution: _____
Project No.: _____
Sample Date: _____

Location: _____ Task: _____ Test: _____ Operator: _____

Sample ID	Bottle #	Description	Initial Vol mL	Rinse Vol mL	Gain mL	Final Vol mL	ppb Hg	Total ug of Hg
	S	Filter/Solids						
	1A	Probe & Filter Rinse	—	—	—	—		
	1B	Heated Line Rinse	—	—	—	—		
77	2	KCl Impingers	300	150	-17	433		
78	3	HNO_3/H_2O_2 Impinger	100	75	0	175		
79	4	$KMnO_4$ Impingers	200	50	-22	228		
80	5	$KMnO_4$ Acid Rinse	—	100	—	100		

Filter Gross wt: _____g Filter Net wt: _____g
Filter Tare wt: _____g Probe/Line Rinse wt: _____g Condensate Total: _____ml
Filter Net wt: _____g Total Particulate wt: _____g

Recovered By: _____ Date: _____

Location: _____ Task: _____ Test: _____ Operator: _____

Sample ID	Bottle #	Description	Initial Vol mL	Rinse Vol mL	Gain mL	Final Vol mL	ppb Hg	Total ug of Hg
	S	Filter/Solids						
	1A	Probe & Filter Rinse						
	1B	Heated Line Rinse						
	2	KCl Impingers						
	3	HNO_3/H_2O_2 Impinger						
	4	$KMnO_4$ Impingers						
	5	$KMnO_4$ Acid Rinse						

Filter Gross wt: _____g Filter Net wt: _____g
Filter Tare wt: _____g Probe/Line Rinse wt: _____g Condensate Total: _____ml
Filter Net wt: _____g Total Particulate wt: _____g

Recovered By: _____ Date: _____

Location: _____ Task: _____ Test: _____ Operator: _____

Sample ID	Bottle #	Description	Initial Vol mL	Rinse Vol mL	Gain mL	Final Vol mL	ppb Hg	Total ug of Hg
	S	Filter/Solids						
	1A	Probe & Filter Rinse						
	1B	Heated Line Rinse						
	2	KCl Impingers						
	3	HNO_3/H_2O_2 Impinger						
	4	$KMnO_4$ Impingers						
	5	$KMnO_4$ Acid Rinse						

Filter Gross wt: _____g Filter Net wt: _____g
Filter Tare wt: _____g Probe/Line Rinse wt: _____g Condensate Total: _____ml
Filter Net wt: _____g Total Particulate wt: _____g

Recovered By: _____ Date: _____

Sample ID	Description	ppb Hg	Total ug of Hg
81	3 in. Filter Blank		
82	Thimble Blank		
83	KCl Blank		
~~84~~ 85	HNO_3 / H2O2 Blank		
86	$KMnO_4$ Blank		
87	HNO_3 / HCl Blank		
88	H_2O Blank		

CONSOL ENERGY

Research and Development
www.consolenergy.com
4000 Brownsville Rd.
South Park, PA 15129

Sample Description.: UNIT 1 COAL TEST 1 12-12-06
Sample No.: COAL-1
Date Received: 12/15/2006
Date Completed: 12/21/2006

Analytical No.: 20065911
Project No.: 1621 -094 -000
Submitted By: LOCKE

Proximate (Dry)	Wt%
Ash	10.62
Volatile Matter	33.72
Fixed Carbon	55.66
BTU/lb	13423
MAF BTU/lb	15018

Ultimate (Dry)%	
Carbon	75.53
Hydrogen	4.08
Nitrogen	1.24
Chlorine	0.0940
Sulfur, Total	2.00
Ash	10.62
Oxygen (DIFF)	6.44

Major Ash Elem. (Ignited)	
SiO2	49.05
Al2O3	23.79
TiO2	1.07
Fe2O3	17.84
CaO	1.65
MgO	0.79
Na2O	0.37
K2O	2.27
P2O5	0.50
SO3	1.35
Undetermined	1.32

Total Moisture 7.24

Sulfur Forms (Dry)	
Pyritic Sulfur	
Sulfate	
Organic	
Sulfur, Total	2.00

Ash Fusion Reducing Temp (F)	
Initial	
Softening	
Hemispherical.	
Fluid	

Ash Fusion Oxidizing	
Initial	
Softening	
Hemispherical.	
Fluid	

Misc.	
Analysis	Value

HGI/FSI	
HGI	
FSI	

Trace Elements (ppm (Dry)	
Hg	0.206
F	
As	
Ba	
Be	
Cd	
Co	
Cr	
Cu	
Li	
Mn	
Mo	
Ni	
Pb	
Sb	
Se	
Sn	
Th	
Tl	
U	
V	
Zn	

Seive Analysis

SIZE	WT %

As Determined Moisture 1.59 %

These values have been reviewed and are approved for transmission.

CONSOL ENERGY

Research and Development
www.consolenergy.com
4000 Brownsville Rd.
South Park, PA 15129

Sample Description.: UNIT 1 COAL TEST 2 12-12-06
Sample No.: COAL-2
Date Received: 12/15/2006
Date Completed: 12/21/2006

Analytical No.: 20065912
Project No.: 1621 -094 -000
Submitted By: LOCKE

Proximate (Dry)	Wt%
Ash	10.49
Volatile Matter	33.81
Fixed Carbon	55.70
BTU/lb	13570
MAF BTU/lb	15160

Ultimate (Dry)%	
Carbon	76.07
Hydrogen	4.11
Nitrogen	1.24
Chlorine	0.1057
Sulfur, Total	2.02
Ash	10.49
Oxygen (DIFF)	5.96

Major Ash Elem. (Ignited)	
SiO_2	48.97
Al_2O_3	23.55
TiO_2	1.06
Fe_2O_3	18.31
CaO	1.64
MgO	0.79
Na_2O	0.35
K_2O	2.19
P_2O_5	0.51
SO_3	1.46
Undetermined	1.17
Total Moisture	6.99

Sulfur Forms (Dry)	
Pyritic Sulfur	
Sulfate	
Organic	
Sulfur, Total	2.02

Ash Fusion Reducing Temp (F)	
Initial	
Softening	
Hemispherical,	
Fluid	

Ash Fusion Oxidizing	
Initial	
Softening	
Hemispherical,	
Fluid	

Misc.	
Analysis	Value

HGI/FSI	
HGI	
FSI	

Trace Elements (ppm (Dry)	
Hg	0.218
F	
As	
Ba	
Be	
Cd	
Co	
Cr	
Cu	
Li	
Mn	
Mo	
Ni	
Pb	
Sb	
Se	
Sn	
Th	
Tl	
U	
V	
Zn	

Seive Analysis	
SIZE	WT %

As Determined Moisture 1.59 %

These values have been reviewed and are approved for transmission.

CONSOL ENERGY

Research and Development
www.consolenergy.com
4000 Brownsville Rd.
South Park, PA 15129

Sample Description.: **UNIT 1 COAL TEST 3 12-13-06**
Sample No.: COAL-3
Date Received: 12/15/2006
Date Completed: 12/21/2006

Analytical No.: **20065913**
Project No.: 1621 -094 -000
Submitted By: LOCKE

Proximate (Dry)	Wt%
Ash	7.95
Volatile Matter	36.24
Fixed Carbon	55.81
BTU/lb	13849
MAF BTU/lb	15045

Ultimate (Dry)%	
Carbon	77.45
Hydrogen	3.97
Nitrogen	1.24
Chlorine	0.0801
Sulfur, Total	1.66
Ash	7.95
Oxygen (DIFF)	7.65

Major Ash Elem. (Ignited)	
SiO_2	49.51
Al_2O_3	24.06
TiO_2	1.07
Fe_2O_3	16.66
CaO	2.12
MgO	0.84
Na_2O	0.52
K_2O	1.96
P_2O_5	0.49
SO_3	1.72
Undetermined	1.05
Total Moisture	12.68

Sulfur Forms (Dry)	
Pyritic Sulfur	
Sulfate	
Organic	
Sulfur, Total	1.66

Ash Fusion Reducing Temp (F)	
Initial	
Softening	
Hemispherical.	
Fluid	

Ash Fusion Oxidizing	
Initial	
Softening	
Hemispherical.	
Fluid	

Misc.	
Analysis	Value

HGI/FSI	
HGI	
FSI	

Trace Elements (ppm (Dry)	
Hg	0.105
F	
As	
Ba	
Be	
Cd	
Co	
Cr	
Cu	
Li	
Mn	
Mo	
Ni	
Pb	
Sb	
Se	
Sn	
Th	
Tl	
U	
V	
Zn	

Seive Analysis

SIZE	WT %

As Determined Moisture 1.77 %

These values have been reviewed and are approved for transmission.

CONSOL ENERGY

Research and Development
www.consolenergy.com
4000 Brownsville Rd.
South Park, PA 15129

Sample Description.: **UNIT 1 COAL TEST 4 12-13-06**
Sample No.: COAL-4
Date Received: 12/15/2006
Date Completed: 12/21/2006

Analytical No.: **20065914**
Project No.: 1621 -094 -000
Submitted By: LOCKE

Proximate (Dry)	Wt%
Ash	8.22
Volatile Matter	35.89
Fixed Carbon	55.89
BTU/lb	13820
MAF BTU/lb	15058

Ultimate (Dry)%	
Carbon	77.43
Hydrogen	3.99
Nitrogen	1.28
Chlorine	0.0931
Sulfur, Total	1.76
Ash	8.22
Oxygen (DIFF)	7.23

Major Ash Elem. (Ignited)	
SiO2	48.91
Al2O3	24.12
TiO2	1.05
Fe2O3	18.30
CaO	1.86
MgO	0.83
Na2O	0.50
K2O	2.02
P2O5	0.50
SO3	1.48
Undetermined	0.43

Total Moisture 7.42

Sulfur Forms (Dry)	
Pyritic Sulfur	
Sulfate	
Organic	
Sulfur, Total	1.76

Ash Fusion Reducing Temp (F)
Initial
Softening
Hemispherical.
Fluid

Ash Fusion Oxidizing
Initial
Softening
Hemispherical.
Fluid

Misc.
Analysis Value

HGI/FSI
HGI
FSI

Trace Elements (ppm (Dry)	
Hg	0.126
F	
As	
Ba	
Be	
Cd	
Co	
Cr	
Cu	
Li	
Mn	
Mo	
Ni	
Pb	
Sb	
Se	
Sn	
Th	
Tl	
U	
V	
Zn	

Seive Analysis

SIZE	WT %

As Determined Moisture 1.57 %

These values have been reviewed and are approved for transmission.

CONSOL ENERGY

Research and Development
www.consolenergy.com
4000 Brownsville Rd.
South Park, PA 15129

Sample Description.: UNIT 1 ESP ASH TEST 1 12-12-06
Sample No.: ASH-1
Date Received: 12/15/2006
Date Completed: 12/21/2006

Analytical No.: 20065915
Project No.: 1621 -094 -000
Submitted By: LOCKE

Proximate (Dry)	Wt%
Ash	81.78
Volatile Matter	
Fixed Carbon	
BTU/lb	
MAF BTU/lb	

Ultimate (Dry)%	
Carbon	16.27
Hydrogen	
Nitrogen	
Chlorine	0.0033
Sulfur, Total	0.38
Ash	81.78
Oxygen (DIFF)	

Major Ash Elem. (Dry)	
SiO2	39.81
Al2O3	19.60
TiO2	0.93
Fe2O3	14.37
CaO	1.72
MgO	0.70
Na2O	0.32
K2O	1.65
P2O5	0.46
SO3	0.81
Undetermined	19.63

Total Moisture

Sulfur Forms (Dry)	
Pyritic Sulfur	
Sulfate	
Organic	
Sulfur, Total	0.38

Ash Fusion Reducing Temp (F)
Initial
Softening
Hemispherical.
Fluid

Ash Fusion Oxidizing
Initial
Softening
Hemispherical.
Fluid

Misc.
Analysis Value

HGI/FSI
HGI
FSI

Trace Elements (ppm (Dry)	
Hg	0.660
F	
As	
Ba	
Be	
Cd	
Co	
Cr	
Cu	
Li	
Mn	
Mo	
Ni	
Pb	
Sb	
Se	
Sn	
Th	
Tl	
U	
V	
Zn	

Seive Analysis

SIZE	WT %

As Determined Moisture 0.03 %

These values have been reviewed and are approved for transmission.

CONSOL ENERGY

Research and Development
www.consolenergy.com
4000 Brownsville Rd.
South Park, PA 15129

Sample Description.: **UNIT 1 ESP ASH TEST 2 12-12-06**
Sample No.: ASH-2
Date Received: 12/15/2006
Date Completed: 12/21/2006

Analytical No.: **20065916**
Project No.: 1621 -094 -000
Submitted By: LOCKE

Proximate	(Dry) Wt%
Ash	79.20
Volatile Matter	
Fixed Carbon	
BTU/lb	
MAF BTU/lb	

Ultimate (Dry)%	
Carbon	18.62
Hydrogen	
Nitrogen	
Chlorine	0.0034
Sulfur, Total	0.48
Ash	79.20
Oxygen (DIFF)	

Major Ash Elem. (Dry)	
SiO2	38.39
Al2O3	19.61
TiO2	0.94
Fe2O3	12.82
CaO	1.75
MgO	0.71
Na2O	0.36
K2O	1.81
P2O5	0.50
SO3	0.99
Undetermined	22.12

Total Moisture

Sulfur Forms (Dry)	
Pyritic Sulfur	
Sulfate	
Organic	
Sulfur, Total	0.48

Ash Fusion Reducing Temp (F)
Initial
Softening
Hemispherical.
Fluid

Ash Fusion Oxidizing
Initial
Softening
Hemispherical.
Fluid

Misc.
Analysis Value

HGI/FSI
HGI
FSI

Trace Elements (ppm (Dry)	
Hg	0.798
F	
As	
Ba	
Be	
Cd	
Co	
Cr	
Cu	
Li	
Mn	
Mo	
Ni	
Pb	
Sb	
Se	
Sn	
Th	
Tl	
U	
V	
Zn	

Seive Analysis

SIZE	WT %

As Determined Moisture 0.16 %

These values have been reviewed and are approved for transmission.

CONSOL ENERGY

Research and Development
www.consolenergy.com
4000 Brownsville Rd.
South Park, PA 15129

Sample Description.: **UNIT 1 ESP ASH TEST 3 12-13-06**
Sample No.: ASH-3
Date Received: 12/15/2006
Date Completed: 12/21/2006

Analytical No.: **20065917**
Project No.: 1621 -094 -000
Submitted By: LOCKE

Proximate (Dry)	Wt%
Ash	75.79
Volatile Matter	
Fixed Carbon	
BTU/lb	
MAF BTU/lb	

Ultimate (Dry)%	
Carbon	23.24
Hydrogen	
Nitrogen	
Chlorine	0.0031
Sulfur, Total	0.46
Ash	75.79
Oxygen (DIFF)	

Major Ash Elem. (Dry)	
SiO2	37.13
Al2O3	17.92
TiO2	0.82
Fe2O3	13.99
CaO	1.79
MgO	0.65
Na2O	0.41
K2O	1.53
P2O5	0.40
SO3	0.86
Undetermined	24.50

Total Moisture

Sulfur Forms (Dry)	
Pyritic Sulfur	
Sulfate	
Organic	
Sulfur, Total	0.46

Ash Fusion Reducing Temp (F)
Initial
Softening
Hemispherical.
Fluid

Ash Fusion Oxidizing
Initial
Softening
Hemispherical.
Fluid

Misc.
Analysis Value

HGI/FSI
HGI
FSI

Trace Elements (ppm (Dry)	
Hg	0.695
F	
As	
Ba	
Be	
Cd	
Co	
Cr	
Cu	
Li	
Mn	
Mo	
Ni	
Pb	
Sb	
Se	
Sn	
Th	
Tl	
U	
V	
Zn	

Seive Analysis	
SIZE	WT %

As Determined Moisture 0.26 %

These values have been reviewed and are approved for transmission.

CONSOL ENERGY

Research and Development
www.consolenergy.com
4000 Brownsville Rd.
South Park, PA 15129

Sample Description.: **UNIT 1 ESP ASH TEST 4 12-13-06**
Sample No.: ASH-4
Date Received: 12/15/2006
Date Completed: 12/21/2006

Analytical No.: **20065918**
Project No.: 1621 -094 -000
Submitted By: LOCKE

Proximate (Dry)	Wt%
Ash	78.30
Volatile Matter	
Fixed Carbon	
BTU/lb	
MAF BTU/lb	

Ultimate (Dry)%	
Carbon	20.92
Hydrogen	
Nitrogen	
Chlorine	0.0049
Sulfur, Total	0.43
Ash	78.30
Oxygen (DIFF)	

Major Ash Elem. (Dry)	
SiO2	37.45
Al2O3	18.28
TiO2	0.85
Fe2O3	13.46
CaO	1.78
MgO	0.66
Na2O	0.39
K2O	1.56
P2O5	0.41
SO3	0.96
Undetermined	24.20

Total Moisture

Sulfur Forms (Dry)	
Pyritic Sulfur	
Sulfate	
Organic	
Sulfur, Total	0.43

Ash Fusion Reducing Temp (F)
Initial
Softening
Hemispherical.
Fluid

Ash Fusion Oxidizing
Initial
Softening
Hemispherical.
Fluid

Misc.
Analysis Value

HGI/FSI
HGI
FSI

Trace Elements (ppm (Dry)	
Hg	0.681
F	
As	
Ba	
Be	
Cd	
Co	
Cr	
Cu	
Li	
Mn	
Mo	
Ni	
Pb	
Sb	
Se	
Sn	
Th	
Tl	
U	
V	
Zn	

Seive Analysis

SIZE	WT %

As Determined Moisture 0.36 %

These values have been reviewed and are approved for transmission.

APPENDIX D

Titration Data

C

DATE	12/5/2006	12/5/2006	12/6/2006	12/6/2006
START TIME	1156	1423	935	1204
END TIME	1256	1523	1035	1305
RUN	AHO-1	AHO-2	AHO-3	AHO-4
SAMPLE O_2 [sampling meter reading]	6.90	7.90	8.40	10.10
Titration Information:				
FILTER PLUG:				
NORMALITY	0.0063	0.0063	0.0063	0.0063
VOLUME	100	100	100	100
ALIQUOT	20.0	20.0	20.0	20.0
TITRANT	0.05	0.05	0.05	0.05
PROBE:				
NORMALITY	0.0063	0.0063	0.0063	0.0063
VOLUME	100	100	100	100
ALIQUOT	20.0	20.0	20.0	20.0
TITRANT	0.45	0.55	0.50	0.53
CONDENSER:				
VOLUME	100	100	100	100
ALIQUOT	20	20	20	20
TITRANT	0.33	0.30	0.25	0.38
SO_2 IMPINGERS:				
VOLUME	250	250	250	250
ALIQUOT	1	1	1	1
TITRANT	6.03	5.90	5.88	6.35

PPL Martins Creek Air Heater Outlet Baseline SO_3 Sampling Results

DATE	12/5/2006	12/5/2006	12/6/2006	12/6/2006
START TIME	1156	1423	935	1204
END TIME	1256	1523	1035	1305
RUN	AHO-1	AHO-2	AHO-3	AHO-4
MEASURED METER VARIABLES				
SAMPLE TIME [Minutes]	60	60	50	60
BAROMETRIC PRESSURE [" Hg]	29.88	29.88	30.00	29.91
SAMPLE VOLUME [ft^3]	4.59	5.08	4.86	5.63
METER TEMPERATURE [°F]	44.8	49.5	51.1	56.3
ORIFICE PRESSURE [" H_2O]	0.05	0.05	0.05	0.03
Y FACTOR	1.047	1.047	1.047	1.047
DSCF SAMPLED	5.020	5.504	5.269	6.023
CONDENSER TEMP [°F]	149	143	143	145
CC/MIN @ CONDENSER	2730	2964	3409	3258
DUCT STATIC PRESSURE, in H_2O	-5.6	-5.7	-5.7	-5.6
DUCT PRESSURE, " Hg	29.47	29.46	29.58	29.50
DUCT MOISTURE, % VOL	5.2	4.1	6.3	5.2
DUCT OXYGEN [%]	6.90	7.90	8.40	10.10
DUCT TEMP DURING TEST [°F]	270.8	270.4	271.8	267.8
SO_2				
SO_2 in IMPINGERS				
lb/DSCF	1.33E-04	1.19E-04	1.24E-04	1.17E-04
PPMV, As Sampled	805	719	748	707
PPMV, @ 0% Oxygen	1202	1156	1251	1369
SO_3				
SO_3 in FILTER PLUG				
lb/DSCF	2.77E-08	2.52E-08	2.64E-08	2.31E-08
PPMV, As Sampled	0.1	0.1	0.1	0.1
PPMV, @ 0% Oxygen	0.2	0.2	0.2	0.2
SO_3 in PROBE				
lb/DSCF	2.49E-07	2.78E-07	2.64E-07	2.42E-07
PPMV, As Sampled	1.2	1.3	1.3	1.2
PPMV, @ 0% Oxygen	1.8	2.2	2.1	2.3
SO_3 in CONDENSER				
lb/DSCF	1.80E-07	1.51E-07	1.32E-07	1.73E-07
PPMV, As Sampled	0.9	0.7	0.6	0.8
PPMV, @ 0% Oxygen	1.3	1.2	1.1	1.6
GAS PHASE SO_3 [lb/DSCF]	4.29E-07	4.29E-07	3.95E-07	4.15E-07
GAS PHASE SO_3 [As Sampled PPM]	2.1	2.1	1.9	2.0
GAS PHASE SO_3, PPM @ 0% O_2	**3.1**	**3.3**	**3.2**	**3.9**
TOTAL PHASE SO_3 [lb/DSCF]	4.57E-07	4.54E-07	4.22E-07	4.38E-07
TOTAL PHASE SO_3 [As Sampled PPM]	2.2	2.2	2.0	2.1
TOTAL SO_3, PPM @ 0% O_2	3.3	3.5	3.4	4.1
% SO_3 in SOLIDS [filter plug/total]	6.1	5.6	6.3	5.3
Volumetric Flow Rate, DSCFM	3004	768	848	3004
Gas Phase SO_3 Throughput, lb/hr	0.0773	0.0198	0.0201	0.0748
SO_3 Mass Throughput, lb/hr	0.0823	0.0209	0.0215	0.0790
DEW POINT DETERMINATION				
Partial Pressure H_2O, mmHg	38.92	30.68	47.33	38.96
Partial Pressure SO_3, mmHg	0.0017	0.0016	0.0015	0.0016
Calculated SO_3 Dew Point, °F	240	236	243	240

APPENDIX C

Titration Data

DATE	12/5/2006	12/5/2006	12/6/2006	12/6/2006
START TIME	1156	1423	935	1204
END TIME	1256	1523	1035	1305
RUN	AHO-1	AHO-2	AHO-3	AHO-4
SAMPLE O_2 [sampling meter reading]	6.90	7.90	8.40	10.10
Titration Information:				
FILTER PLUG:				
NORMALITY	0.0063	0.0063	0.0063	0.0063
VOLUME	100	100	100	100
ALIQUOT	20.0	20.0	20.0	20.0
TITRANT	0.05	0.05	0.05	0.05
PROBE:				
NORMALITY	0.0063	0.0063	0.0063	0.0063
VOLUME	100	100	100	100
ALIQUOT	20.0	20.0	20.0	20.0
TITRANT	0.45	0.55	0.50	0.53
CONDENSER:				
VOLUME	100	100	100	100
ALIQUOT	20	20	20	20
TITRANT	0.33	0.30	0.25	0.38
SO_2 IMPINGERS:				
VOLUME	250	250	250	250
ALIQUOT	1	1	1	1
TITRANT	6.03	5.90	5.88	6.35

PPL Martins Creek Air Heater Outlet Baseline SO_3 Sampling Results

DATE	12/5/2006	12/5/2006	12/6/2006	12/6/2006
START TIME	1156	1423	935	1204
END TIME	1256	1523	1035	1305
RUN	AHO-1	AHO-2	AHO-3	AHO-4
MEASURED METER VARIABLES				
SAMPLE TIME [Minutes]	60	60	50	60
BAROMETRIC PRESSURE [" Hg]	29.88	29.88	30.00	29.91
SAMPLE VOLUME [ft^3]	4.59	5.08	4.86	5.63
METER TEMPERATURE [°F]	44.8	49.5	51.1	56.3
ORIFICE PRESSURE [" H_2O]	0.05	0.05	0.05	0.03
Y FACTOR	1.047	1.047	1.047	1.047
DSCF SAMPLED	5.020	5.504	5.269	6.023
CONDENSER TEMP [°F]	149	143	143	145
CC/MIN @ CONDENSER	2730	2964	3409	3258
DUCT STATIC PRESSURE, in H_2O	-5.6	-5.7	-5.7	-5.6
DUCT PRESSURE, " Hg	29.47	29.46	29.58	29.50
DUCT MOISTURE, % VOL	5.2	4.1	6.3	5.2
DUCT OXYGEN [%]	6.90	7.90	8.40	10.10
DUCT TEMP DURING TEST [°F]	270.8	270.4	271.8	267.8
SO_2				
SO_2 in IMPINGERS				
lb/DSCF	1.33E-04	1.19E-04	1.24E-04	1.17E-04
PPMV, As Sampled	805	719	748	707
PPMV, @ 0% Oxygen	1202	1156	1251	1369
SO_3				
SO_3 in FILTER PLUG				
lb/DSCF	2.77E-08	2.52E-08	2.64E-08	2.31E-08
PPMV, As Sampled	0.1	0.1	0.1	0.1
PPMV, @ 0% Oxygen	0.2	0.2	0.2	0.2
SO_3 in PROBE				
lb/DSCF	2.49E-07	2.78E-07	2.64E-07	2.42E-07
PPMV, As Sampled	1.2	1.3	1.3	1.2
PPMV, @ 0% Oxygen	1.8	2.2	2.1	2.3
SO_3 in CONDENSER				
lb/DSCF	1.80E-07	1.51E-07	1.32E-07	1.73E-07
PPMV, As Sampled	0.9	0.7	0.6	0.8
PPMV, @ 0% Oxygen	1.3	1.2	1.1	1.6
GAS PHASE SO_3 [lb/DSCF]	4.29E-07	4.29E-07	3.95E-07	4.15E-07
GAS PHASE SO_3 [As Sampled PPM]	2.1	2.1	1.9	2.0
GAS PHASE SO_3, PPM @ 0% O_2	**3.1**	**3.3**	**3.2**	**3.9**
TOTAL PHASE SO_3 [lb/DSCF]	4.57E-07	4.54E-07	4.22E-07	4.38E-07
TOTAL PHASE SO_3 [As Sampled PPM]	2.2	2.2	2.0	2.1
TOTAL SO_3, PPM @ 0% O_2	3.3	3.5	3.4	4.1
% SO_3 in SOLIDS [filter plug/total]	6.1	5.6	6.3	5.3
Volumetric Flow Rate, DSCFM	3004	768	848	3004
Gas Phase SO_3 Throughput, lb/hr	0.0773	0.0198	0.0201	0.0748
SO_3 Mass Throughput, lb/hr	0.0823	0.0209	0.0215	0.0790
DEW POINT DETERMINATION				
Partial Pressure H_2O, mmHg	38.92	30.68	47.33	38.96
Partial Pressure SO_3, mmHg	0.0017	0.0016	0.0015	0.0016
Calculated SO_3 Dew Point, °F	240	236	243	240

APPENDIX D

Control Room Data

Run One

Date/Time	1TI20-1.AO.sample	1TI20-2.AO.sample	1TI11-1.AO.sample	1TI11-3.AO.sample	1CEMS-06.AO.sample	1CEMS-09.AO.sample	1CEMS-12.AO.sample
12/5/2006 9:20	84.1914	70.0625	277.9844	292.8906	739.7813	184.0938	8.1997
12/5/2006 9:25	84.2578	70.2305	278.4531	293.2031	740.1875	178.2969	8.3999
12/5/2006 9:30	84.3789	69.8672	278.8281	293.1406	737.6875	181.8984	8.2998
12/5/2006 9:35	84.1133	69.4922	278.5938	293	748.5938	178.6953	8.3999
12/5/2006 9:40	83.7188	69.5703	278.6563	292.8125	745.375	178.7969	8.2998
12/5/2006 9:45	83.5469	69.3945	278.7656	292.5	757.2813	174.5938	8.3999
12/5/2006 9:50	82.4961	68.6875	278.3125	291.8906	745.7813	182.0938	8.2998
12/5/2006 9:55	81.2266	68.25	277.7656	291.4063	732.5	184.7969	8.1997
12/5/2006 10:00	80.8828	67.793	278.2344	291.0469	739.1875	183.0938	8.1997
12/5/2006 10:05	80.9141	67.832	278.5	290.9688	740.1875	180.6953	8.2998
12/5/2006 10:10	81.1484	68.2695	278.7188	291.0938	779.2813	169.5938	8.5996
12/5/2006 10:15	81.4141	68.0547	278.8594	291.0781	758.7813	177.0938	8.3999
12/5/2006 10:20	81.2148	67.8477	278.6875	290.9063	754.1875	180.5	8.3999
12/5/2006 10:25	81.1484	67.9727	278.875	291.0938	762.875	176.5938	8.5
12/5/2006 10:30	80.8203	68.2227	278.6563	291.2969	733.5938	183.3984	8.1997
12/5/2006 10:35	81.3516	68.875	279.1563	291.7969	718.5	187.1953	8.0996
12/5/2006 10:40	81.5898	68.9258	279.6094	292.25	741.2813	183.1953	8.2998
12/5/2006 10:45	81.5742	69.1055	279.6719	292.4844	760.1875	176.1953	8.5
12/5/2006 10:50	81.043	68.7461	279.6406	292.2031	747.1875	179.3984	8.3999
12/5/2006 10:55	80.6758	68.6602	279.5625	291.8594	770.6875	171.5938	8.6997
12/5/2006 11:00	80.9297	68.3359	279.3594	291.75	750.2813	178.5	8.3999
12/5/2006 11:05	80.7813	68.1836	279.4688	291.4375	766.0938	175.7969	8.5
12/5/2006 11:10	80.6758	68.2148	279.6094	291.4063	766.7813	174.0938	8.5
12/5/2006 11:15	80.4609	68.3945	279.5781	291.4688	751.7813	175.8984	8.3999
12/5/2006 11:20	80.2852	68.2148	279.6875	291.4063	714.6875	185.1953	8.0996
12/5/2006 11:25	80.6289	68.168	279.9844	291.4375	733.5938	177.5	8.2998
12/5/2006 11:30	80.3633	68.3945	279.9219	291.375	732.875	179.2969	8.2998

Run Two

Date/Time	1TI20-1.AO.sample	1TI20-2.AO.sample	1TI11-1.AO.sample	1TI11-3.AO.sample	1CEMS-06.AO.sample	1CEMS-09.AO.sample	1CEMS-12.AO.sample
12/5/2006 12:35	79.793	68.0195	280.875	291.3281	743.2813	178.0938	8.3999
12/5/2006 12:40	79.4023	68.6094	280.7813	291.5781	730.375	183.5	8.2998
12/5/2006 12:45	79.5977	68.8047	281.0469	292	740.1875	181.2969	8.3999
12/5/2006 12:50	79.3555	68.4648	281.2344	291.9375	741.875	181.5	8.3999
12/5/2006 12:55	78.9922	68.0039	281.0156	291.625	745.375	183.7969	8.3999
12/5/2006 13:00	78.5977	68.1992	280.7656	291.4688	740.1875	187.3984	8.2998
12/5/2006 13:05	78.8242	68.3242	281.2969	291.5781	699.6875	195.1953	8
12/5/2006 13:10	79.2852	68.5898	281.3438	291.7188	724.5	189.7969	8.1997
12/5/2006 13:15	79.2852	68.8867	281.5156	291.7188	731.5	185.1953	8.3999
12/5/2006 13:20	79.1172	68.5195	281.875	291.6563	723.0938	190.6953	8.1997
12/5/2006 13:25	78.9219	68.6211	281.875	291.6563	734.2813	184.7969	8.2998
12/5/2006 13:30	79.1172	68.7188	282.2188	291.6563	740.875	184.5	8.2998
12/5/2006 13:35	79.0039	68.7031	282.2813	291.7188	741.2813	185	8.2998
12/5/2006 13:40	78.25	68.3438	281.9063	291.4375	727.2813	189.5938	8.0996
12/5/2006 13:45	77.7617	68.0469	281.6563	291.1719	741.5938	184.0938	8.2998
12/5/2006 13:50	77.8398	67.8359	281.7188	290.9844	752.5	180.1953	8.2998
12/5/2006 13:55	78.332	68.3242	282.2969	291.2344	769.875	173.8984	8.5
12/5/2006 14:00	78.2813	68.7617	282.4375	291.5469	733.875	188.8984	8.0996
12/5/2006 14:05	78.0859	69.0586	282.0938	291.5469	733.5938	185.1953	8.2998
12/5/2006 14:10	77.9844	69.0586	281.9375	291.2813	747.875	181	8.2998
12/5/2006 14:15	76.7617	68.2266	281.375	290.4688	745.0938	182.7969	8.2998
12/5/2006 14:20	76.0352	67.793	280.9219	289.5938	771	177.2969	8.5996
12/5/2006 14:25	76.7227	67.8906	280.9219	289.5156	760.7813	184	8.3999
12/5/2006 14:30	76.8359	67.9102	281.2031	289.4531	723.7813	186.0938	8.1997
12/5/2006 14:35	77.0156	67.9883	281.0938	289.2656	733.1875	190	8.2998
12/5/2006 14:40	77.6211	68.0078	281.1094	289.2813	727.5938	190.0938	8.2998
12/5/2006 14:45	77.8984	67.9883	281.25	289.4375	736	188.6953	8.2998

Run Three

Date/Time	1TI20-1.AO.sample	1TI20-2.AO.sample	1TI11-1.AO.sample	1TI11-3.AO.sample	1CEMS-06.AO.sample	1CEMS-09.AO.sample	1CEMS-12.AO.sample
12/6/2006 8:50	87.7969	74.6992	274.0469	286.8594	727.1875	186.0938	8.3999
12/6/2006 8:55	88.25	74.1914	276.1406	288.7031	701.0938	185.3984	8.0996
12/6/2006 9:00	87.207	72.7148	276.9688	289.7813	677.2813	187.0938	7.8999
12/6/2006 9:05	86.1602	71.5234	276.375	289.7031	708	179.5938	8.1997
12/6/2006 9:10	85.8242	70.8789	275.0625	288.9688	738.5	175.1953	8.3999
12/6/2006 9:15	85.6758	70.7227	274.2656	288	690.6875	178	8.0996
12/6/2006 9:20	86.1172	71.3828	273.3906	287.4688	698.375	175.6953	8
12/6/2006 9:25	87.6602	72.6914	273.5625	287.2969	720.2813	173.1953	8.2998
12/6/2006 9:30	88.9023	73.7891	276.125	289.0938	679.6875	179.6953	8
12/6/2006 9:35	88.7109	73.1016	278.8281	291.2969	672.875	181.1953	7.8999
12/6/2006 9:40	87.0625	71.7734	278.4531	291.3438	687.7813	175.8984	8
12/6/2006 9:45	85.8633	71.0195	277.0469	290.3594	669.0938	179.3984	7.7998
12/6/2006 9:50	85.0234	70.7344	275.7813	289	685.5	174.8984	7.8999
12/6/2006 9:55	84.9648	70.9648	275.4844	288.5469	686.7813	179.8984	8
12/6/2006 10:00	84.9258	71.6094	275.4531	288.8594	677.375	178.8984	7.8999
12/6/2006 10:05	85.125	71.918	276.2188	289.5313	669.0938	180.3984	7.8999
12/6/2006 10:10	85.2461	71.75	277.5	290.3906	662.1875	184.1953	7.7998
12/6/2006 10:15	84.7266	71.207	278.0469	290.5313	679.6875	178.0938	8
12/6/2006 10:20	83.8984	70.9375	277.8906	290.1094	701.7813	169	8.2998
12/6/2006 10:25	83.3008	70.7031	277.0313	289.4219	703.1875	177.1953	8.0996
12/6/2006 10:30	82.9492	70.7344	276.2969	288.6875	700.7813	175.2969	8.0996
12/6/2006 10:35	83.0547	70.7461	276.2188	288.3594	690	182.0938	7.8999
12/6/2006 10:40	83.1953	70.9883	276.8594	288.7344	708.0938	175.0938	8.1997
12/6/2006 10:45	83.5313	71.2383	278.0781	289.7188	686.5	175.2969	8.0996
12/6/2006 10:50	84.125	71.957	279.0313	290.9219	705.2813	171.5938	8.1997
12/6/2006 10:55	83.7227	72.125	279.25	291.1406	689.0938	178.5	8
12/6/2006 11:00	83.3047	71.7891	278.7188	290.5938	661.6875	184	7.7

Run Four

Date/Time	1TI20-1.AO.sample	1TI20-2.AO.sample	1TI11-1.AO.sample	1TI11-3.AO.sample	1CEMS-06.AO.sample	1CEMS-09.AO.sample	1CEMS-12.AO.sample
12/6/2006 11:55	82.5547	72.2852	277.9375	287.4531	696.7813	173.2969	8
12/6/2006 12:00	82.2773	72.3867	276.8438	286.2031	671.2813	180.5938	7.7998
12/6/2006 12:05	82.5313	72.6523	276.3125	285.0781	672.375	179.5	7.8999
12/6/2006 12:10	83.2695	73.0313	277.3906	285.8906	691.5938	171.3984	8.0996
12/6/2006 12:15	83.8008	73.582	280.0625	288.4844	715.1875	170.5	8.2998
12/6/2006 12:20	83.082	73.7148	281.2813	290.0469	678.375	180.5	7.8999
12/6/2006 12:25	82.6797	73.5898	280.7656	289.8594	675.2813	180.5	8
12/6/2006 12:30	81.6602	73.4141	279.6719	288.5938	675	182.5	7.7998
12/6/2006 12:35	80.6172	73.4063	278.5781	287.1719	672.2813	179.5	7.7998
12/6/2006 12:40	80.6406	73.7734	277.7969	286.1406	677.875	180.6953	7.7998
12/6/2006 12:45	81.3359	74.0586	277.875	286.0469	722.6875	168.0938	8.1997
12/6/2006 12:50	81.5977	74.1328	278.6719	286.3438	668.875	182.3984	7.8999
12/6/2006 12:55	81.7031	74.0508	280.1094	287.1875	665.6875	175.6953	7.7998
12/6/2006 13:00	81.3789	74.1992	281.1719	287.6563	670	175.5938	7.7998
12/6/2006 13:05	80.9336	73.9336	281.1094	287.3438	674.875	175.5938	7.8999
12/6/2006 13:10	80.6484	73.6836	280.1406	286.0313	696.7813	173.2969	8
12/6/2006 13:15	80.3789	73.6094	278.8281	284.7188	677.2813	176.8984	7.8999
12/6/2006 13:20	80.1641	73.6875	277.8125	283.5313	675.1875	170.3984	7.8999
12/6/2006 13:25	80.6328	74.0117	277.3906	282.8594	691.7813	170.5	8
12/6/2006 13:30	81.2734	74.6797	278.1406	283.3594	688.7813	169.3984	7.8999
12/6/2006 13:35	81.8047	75.4258	280.2969	285.3594	671.5938	172.2969	7.8999
12/6/2006 13:40	81.8516	75.7734	281.7813	287.0156	666.7813	177.3984	7.7998
12/6/2006 13:45	81.6289	75.7344	281.8438	287.4063	663.1875	180.8984	7.7998
12/6/2006 13:50	81.4336	75.4336	280.9844	286.6406	677.375	176.8984	7.8999
12/6/2006 13:55	81.0859	75.1719	279.1406	285.0313	680.375	176.5938	7.7998
12/6/2006 14:00	80.9102	74.9883	278.3125	283.7031	684.5938	173.1953	7.8999

APPENDIX B

Allegheny Energy R. Paul Smith Emissions Testing Information

Full-Scale Field Trial of the

Low Temperature Mercury Capture Process

U.S. DOE Cooperative Agreement No. DE-FC26-06NT42777

Topical Report
Baseline Mercury and Sulfur Trioxide Evaluation
Field Testing Conducted September 11 and 12, 2007
At the Allegheny Energy R. Paul Smith Station Unit 4

CONSOL Energy Inc.
Research & Development
4000 Brownsville Road
South Park, PA

James E. Locke
Manager, Field Testing and Operations
(412) 854-6607
jimlocke@consolenergy.com

and

Brian W. Green
Associate Engineer, Field Testing and Operations
(412) 854-6537
BrianWGreen@consolenergy.com

February 12, 2008

Acknowledgement: “This material is based upon work supported by the Department of Energy under Award Number DE-FC26-06NT42777”

Disclaimer: “This report was prepared as an account of work sponsored by an agency of the United States Government. Neither the United States Government nor any agency thereof, nor any of their employees, makes any warranty, express or implied, or assumes any legal liability or responsibility for the accuracy, completeness, or usefulness of any information, apparatus, product, or process disclosed, or represents that its use would not infringe privately owned rights. Reference herein to any specific commercial product, process, or service by trade name, trademark, manufacturer, or otherwise does not necessarily constitute or imply its endorsement, recommendation, or favoring by the United States Government or any agency thereof. The views and opinions of authors expressed herein do not necessarily state or reflect those of the United States Government or any agency thereof.”

TABLE OF CONTENTS

Section Page

1.0 Executive Summary 1
2.0 Summary of Test Data 2
2.1 Summary of SO_3 Data 2
2.2 Summary of Process Stream Data 2
2.3 Summary of Hg Speciation Data 4
2.4 Summary of Mercury Removal 4
2.5 Stack Mercury Emissions 4
3.0 Sampling Locations and Sampling Points 5
3.1 Unit 4 Air heater Outlet 5
3.2 Unit 4 Stack 5
4.0 Experimental 5
4.1 Test Matrix 5
4.2 Flue Gas Hg Measurements 6
5.0 Results 8
5.1 Flue Gas SO_3 Measurements 8
5.2 Mercury Sampling Test Results 10
5.3 Process Stream Samples 11
5.3.1. Coal Samples and Results of Analyses 11
5.3.2. Mill Reject Samples 12
5.3.3. Fly Ash Samples 13
5.3.4. QA/QC 14
5.3.5. Mass Balance for Mercury 15

LIST OF TABLES

Page

Table 1. Summary of Baseline Air Heater Outlet SO_3 Test Results 1
Table 2. Summary of Baseline Mercury Testing at the Stack 2
Table 3. Summary of Air Heater Outlet SO_3 Sampling. 2
Table 4. Summary of Process Stream Data 3
Table 5. Summary of Unit 4 Stack Mercury Speciation Data 4
Table 6. Summary of Hg Removal 4
Table 7. Heat Input-Based Stack Hg Emissions 5
Table 8. Hg Speciation by Sampling Train Component 7
Table 9. Ontario Hydro Sampling Results 11
Table 10. Coal Sample Results 12
Table 11. Mill Reject Analytical Results 13
Table 12. ESP Hopper Ash Analyses 14
Table 13. Mercury Material Balance Closures 16

FIGURES

Figure 1. Ontario Hydro Sampling Train – Method 17 Configuration..... 7
Figure 2. Controlled Condensation SO_3 Sampling Train 9

LIST OF APPENDICES

APPENDIX A	Field Data Sheets	A-1
APPENDIX B	Analytical Data	B-1
APPENDIX C	Control Room Data	C-1

LIST OF ABBREVIATIONS

acfm	-	actual cubic feet per minute (wet)
Al_2O_3	-	aluminum oxide
am	-	morning
$BaCl_2$	-	barium chloride
Btu	-	heating value in British thermal units
cfm	-	cubic feet per minute
Ca	-	calcium
CaO	-	calcium oxide
CEM	-	Continuous Emissions Monitoring
CO_2	-	carbon dioxide
CONSOL R&D	-	CONSOL Energy Inc., Research and Development
CVAA	-	cold vapor atomic absorption
DI	-	deionized water
DOE	-	Department of Energy
dscf	-	dry standard cubic feet
dscfm	-	dry standard cubic feet per minute
EPA	-	U.S. Environmental Protection Agency
ESP	-	electrostatic precipitator
FGD	-	flue gas desulphurization
Fe_2O_3	-	iron oxide
ft	-	feet
ft^2	-	square feet
ft^3	-	cubic feet
gm	-	grams
gpm	-	gallons per minute
gr	-	grains
HCl	-	hydrochloric acid
Hg	-	mercury
Hg^{part}	-	mercury in particulate form
Hg^{total}	-	total mercury in particulate, oxidized, and elemental forms
Hg^{++}	-	mercury in oxidized form
Hg^{o}	-	mercury in elemental form
HNO_3	-	nitric acid
H_2O	-	water
H_2O_2	-	hydrogen peroxide
hr	-	hour
in	-	inch
K	-	potassium
K_2O	-	potassium oxide
KCl	-	potassium chloride
$KMnO_4$	-	potassium permanganate
KPPH	-	thousand pound per hour
IPA	-	isopropyl alcohol
L	-	liter
LTMC	-	Low-Temperature Mercury Capture

LSFO	-	limestone forced oxidation
lb	-	pound
lb/TBtu	-	pound per trillion Btu
m	-	meter
m^3	-	cubic meter
mg	-	milligram, 10^{-3} gram
Mg	-	magnesium
$Mg(OH_2)$	-	magnesium hydroxide
min	-	minute
mL	-	milliliter
M	-	molar, mol/L
MM	-	million
mol	-	mole
Na	-	sodium
Na_2O	-	sodium oxide
ng	-	nanogram, 10^{-9} gram
N_2	-	molecular nitrogen
NH_3	-	ammonia
NIST	-	National Institute of Standards and Technology
NO	-	nitric oxide
NO_2	-	nitrogen dioxide
NO_3^-	-	nitrate
O_2	-	molecular oxygen
O_3	-	ozone
P_2O_5	-	phosphorus pentoxide
pm	-	afternoon
PM	-	particulate matter
ppb	-	parts per billion
ppm	-	parts per million
ppmv	-	parts per million by volume
PRSD	-	percent relative standard deviation
QA	-	quality assurance
QC	-	quality control
rpm	-	revolutions per minute
RPS	-	Allegheny Energy R. Paul Smith Station
scf	-	standard cubic feet (68°F and 29.92"Hg)
scfm	-	standard cubic feet per minute
SiO_2	-	silicon oxide
SRM	-	Standard Reference Material
SO_2	-	sulfur dioxide
SO_3	-	sulfur trioxide (or sulfite)
SO_4^{2-}	-	sulfate
temp	-	temperature
tph	-	tons per hour
wt	-	weight
V	-	volts

°F	-	temperature in degrees Fahrenheit
~	-	approximately
<	-	less than
>	-	more than
µg	-	microgram, 10^{-6} gram

1.0 Executive Summary

CONSOL Energy Inc., Research and Development (CONSOL R&D) conducted a flue gas mercury (Hg) and sulfur trioxide (SO_3) evaluation at the Allegheny Energy R. Paul Smith Station (RPS) on Unit 4 on September 11 and 12, 2007, under Department of Energy (DOE) Award Number DE-FC26-06NT42777. The test program serves as the baseline emissions evaluation for the project and consisted of flue gas mercury measurements at the Unit 4 stack using the Ontario-Hydro Flue Gas Mercury Speciation Method and SO_3 measurements at the Unit 4 air heater outlet using the Controlled Condensation Method. Two tests were conducted on each date. Mercury mass balance calculations were performed for all tests. The test methods and results are described in this report.

The Unit 4 ductwork splits the boiler flue gas into two streams designated “A” and “B,” upstream of the ESP. The two ducts combine at the ESP inlet plenum, from which point the flue gas is routed through a common pathway through the ESP train and stack. SO_3 sampling was performed on both ducts at the air heater outlet while mercury sampling was conducted at the stack location only. Unit 4 operations incorporate a humidification system downstream of the air heater to condition the flue gas to enhance particulate matter removal. Four tests were conducted; two with the humidification system inactive and two with the system active to determine the impact humidification had on the flue gas, both in terms of SO_3 and mercury concentrations and flue gas temperatures.

The resulting test data provide baseline air heater outlet SO_3 concentrations and baseline total mercury removal from coal input. The average results for the tests are summarized in Tables 1 and 2. The results show that humidification provides both a decrease in SO_3 concentration and an increase in mercury removal.

Table 1. Summary of Baseline Air Heater Outlet SO_3 Test Results

	Humidification Status	**Inactive**	**Active**
SO_3	**Gas Phase, ppmv @ 0% O_2**	8.3	3.3
	Total Phase, ppmv @ 0% O_2	9.1	4.7
	Acid Dew Point, °F	268	255

Table 2. Summary of Baseline Mercury Testing at the Stack

Humidification Status		Inactive	Active
Particle-bound Hg, (dry)	μg/dscm	0.12	0.11
	mg/sec	0.02	0.01
Oxidized Hg, (dry)	μg/dscm	1.14	0.69
	mg/sec	0.12	0.08
Elemental Hg, (dry)	μg/dscm	0.25	0.25
	mg/sec	0.03	0.03
Total Hg, (dry)	μg/dscm	1.51	1.05
	mg/sec	0.17	0.12
Coal Feed Mercury Input, mg/sec		1.82	1.81
Total Hg removal, coal-to-ESP out [%]		90.7	93.4

2.0 Summary of Test Data

2.1 Summary of SO_3 Data

Flue gas sulfur trioxide (SO_3) concentrations at duct conditions and corrected to 0% O_2 are shown in the following table:

Table 3. Summary of Air Heater Outlet SO_3 Sampling.

Test No	Humidification Status	Date & Time	Average Duct O_2, vol %, dry	SO_3 Concentration, ppmv dry @ 0% O_2	
				As Sampled	Corrected to 0% O_2
1	Inactive	09/11/2007 1615-1716	4.5	8.1	10.3
2	Inactive	09/11/2007 1740-1841	4.5	6.1	7.8
3	Active	09/12/2007 1023-1124	4.5	5.2	6.6
4	Active	09/12/2007 1145-1246	4.0	2.2	2.8

2.2 Summary of Process Stream Data

Summarized in Table 4 are the calculated or measured flow rates of the process mercury inputs and outputs, and flue gas mercury output at the stack. From the total amount of mercury entering and leaving the system, the mercury material balance closure for each test was calculated.

Table 4. Summary of Process Stream Data

	Test 1	Test 2	Test 3	Test 4
Coal Feed Rate [KPPH, dry basis]	77.5	76.9	78.8	81.2
Hg in Coal [ppm, dry]	0.198	0.176	0.201	0.158
Total Hg Input from Coal [mg/sec, dry]	1.93	1.70	2.00	1.62
Humidification (On/Off)	Off	Off	On	On
ESP Ash, calc'd [KPPH, dry]	11.71	11.85	12.40	11.66
Hg in ESP Ash [ppm, dry]	1.18	1.76	2.24	1.11
Total Hg Output via ESP Ash [mg/sec, dry]	1.74	2.63	3.50	1.63
Total Flue Gas Flow Rate at Stack, measured [dscm/min]	6510	6380	6460	6290
Total Hg in Flue Gas at Stack [μg/dscm]	1.53	1.49	0.90	1.20
Total Hg Output via Stack [mg/sec]	0.17	0.16	0.10	0.13
Total Hg Input [mg/sec]	2.04	1.81	2.11	1.71
Total Hg Output [mg/sec]	2.03	2.98	3.50	1.74
Hg Closure [%]	100%	164%	182%	111%

KPPH = thousand pound per hour
dscm = dry standard cubic meters

Prior to and following each test, ESP ash was evacuated from the ash hoppers so that only ash removed during the test period was collected in the hoppers. The ash is emptied, one hopper at a time, starting with the first ESP field and sequentially emptying hoppers through each field, to the final hopper in the last field. It is unfortunate that the time during the hopper emptying sequence that the sample was collected was not controlled. Thus, the ash sample is not necessarily representative.

It has been established that ash composition varies by hopper; in particular, mercury concentration increases as the ash progresses through the ESP. The ash mercury concentrations reported for test runs two and three are significantly higher than those reported for tests one and four; this difference correlates with elevated mercury mass balances for tests two and three, indicating that there would be more mercury removed from the system than was introduced. Since the only parametric difference between the tests is the high mercury concentration of the ash, the measured concentrations cannot be representative of the actual mercury concentration.

2.3 Summary of Hg Speciation Data

Listed in Table 5 is the mercury speciation at the stack for each of the four tests. The particle-bound and elemental mercury concentrations remained consistent regardless of humidification status, while the vapor phase oxidized concentrations decreased with the humidification system in service.

Table 5. Summary of Unit 4 Stack Mercury Speciation Data

Test Number	1	2		3	4	
Humidification Status	Inactive	Inactive		Active	Active	
Mercury Species (μg/dscm):			Average			Average
Particulate	0.09	0.16	0.13	0.10	0.11	0.11
Oxidized	1.23	1.05	1.14	0.57	0.81	0.69
Elemental	0.21	0.28	0.25	0.22	0.27	0.25
Total	1.53	1.49	1.51	0.90	1.20	1.05

2.4 Summary of Mercury Removal

The coal-to-stack Hg removals for the tests are listed in Table 6.

Table 6. Summary of Hg Removal

Test Number	1	2	3	4
Humidification Status	Inactive	Inactive	Active	Active
Coal Hg input [mg/sec]	1.93	1.70	2.00	1.62
Total Hg in stack flue gas [mg/sec]	0.17	0.16	0.10	0.13
Hg removal, coal vs. stack [%]	91.2	90.6	95.0	92.0
Average Hg Removal [%]	90.9		93.5	

System mercury removals were determined by comparing the measured coal mercury input to the stack mercury mass output.

2.5 Stack Mercury Emissions

Listed in Table 7 are the results of mercury emissions from the stack based on the boiler heat input.

Table 7. Heat Input-Based Stack Hg Emissions

Test Number	1	2	3	4
Humidification Status	Inactive	Inactive	Active	Active
Coal feed rate [KPPH, as fed]	83.4	83.0	84.9	86.9
Coal feed rate [KPPH, dry]	77.5	76.9	78.8	81.2
Coal HHV [Btu/Ib, dry basis]	12,242	12,275	12,285	12,441
Total heat input from coal [MM Btu/hr]	949	943	969	1011
Total Hg emissions [Ib/TBtu]	1.42	1.35	0.82	1.02
Average total Hg emissions [Ib/TBtu]	1.39		0.92	

3.0 Sampling Locations and Sampling Points

3.1 Unit 4 Air heater Outlet

Sampling ports are located in the flue gas ductwork between the air heater outlet and the ESP. The flue gas is divided into two separate rectangular, vertically-oriented ducts, each fitted with six sample access ports and measuring 188 inches wide by 72 inches deep. Sampling was conducted for SO_3, each test being 60 minutes in duration, using the Controlled Condensation Method.

3.2 Unit 4 Stack

Mercury sampling was performed at the stack at an isokinetic sample rate, utilizing the Ontario Hydro Flue Gas Mercury Speciation Method (ASTM D6784-02). Flue gas velocity and temperature profiles were conducted during each test run. The stack sampling location consists of a single flue measuring ten feet in diameter. A single port is located in each quadrant of the stack circumference for a total of four ports. Three traverse points were sampled in each port for a total of twelve sample points per test.

4.0 Experimental

This sampling program was performed to establish baseline concentrations for U.S. DOE Cooperative Agreement No. DE-FC26-06NT42777, Full-Scale Field Trial of LTMC Process. Baseline SO_3 levels were examined to evaluate the level of control required by the water/$Mg(OH_2)$ slurry injection system. Mercury concentration at the stack was measured to determine native removal occurring in the unit. Samples of coal and fly ash were taken during each test period to perform material balances for mercury to verify the Ontario-Hydro results.

4.1 Test Matrix

The sampling consisted of a total of four mercury and four SO_3 tests over two sampling days. Two mercury measurements were performed at the Unit 4 stack sampling location, and two SO_3 measurements were performed at the Unit 4 air heater outlet, on each of the two sampling days. Day one testing was performed with the flue gas humidification system inactive while day two tests were conducted with the system in

operation. Mercury measurements were conducted isokinetically. Sulfur trioxide measurements at the air heater outlet were conducted independently of the mercury tests.

Preliminary pitot surveys were conducted at each location prior to Test 1. At all measurement locations, the flows were found to be in-line with the vertical axis of the duct. Mercury measurements were conducted with the sampling nozzle oriented directly into the flow.

4.2 Flue Gas Hg Measurements

Flue gas Hg measurements were obtained using the Ontario-Hydro mercury speciation method.[1] CONSOL R&D incorporated the EPA Method 17 sample train configuration as shown in Figure 1.

In the Ontario-Hydro method, with the sample train in the Method 17 configuration, gas is extracted isokinetically from the flue gas stream through a nozzle and in-stack filter. Total particulate matter mass loading is calculated from the solids collected in the nozzle, front-half of the filter housing, and on the filter. The filter temperature is dependant on the flue gas temperature. Mercury collected in the nozzle and filter is assumed to be particle-bound mercury (Hg^{part}).

The filter housing is attached to a glass-lined stainless steel probe that is maintained at 250 °F ±20 °F, or as close as practical to the flue gas temperature if the flue gas temperature is higher than 250 °F. Mercury collected in the probe is reported as oxidized mercury (Hg^{++}).

The probe is connected to the impinger train with a flexible, heated, Teflon sample line that is maintained at 250 °F ±20 °F, or as close as practical to the flue gas temperature if the flue gas temperature is higher than 250 °F. Mercury collected in the probe is also assumed to be Hg^{++}.

The flue gas exits the sample line and passes through a series of chilled impingers. The first three impingers are filled with 100 mL of a 1M-potassium chloride (KCl) solution. Mercury captured in these impingers is reported as Hg^{++}. The next impinger is filled with 100 mL of 5% nitric acid and 10% hydrogen peroxide (H_2O_2) solution to remove SO_2 from the flue gas and preserve the oxidizing strength of the subsequent two impingers, which are filled with 100 mL of an acidic potassium permanganate ($KMnO_4$) solution. Mercury captured in the nitric acid impinger and the potassium permanganate impingers is reported as elemental mercury (Hg^0). The gas exits the impinger train through a silica gel-filled impinger that removes uncondensed moisture from the sample gas. The sampling train design results in the following species collection Hg sequence:

---

[1] ASTM D6784-02, Standard Test Method for Elemental, Oxidized, Particle-Bound and Total Mercury in Flue Gas Generated from Coal-Fired Stationary Sources (Ontario Hydro Method)

Table 8. Hg Speciation by Sampling Train Component

Sampling Train Component	Species Measured
Nozzle & Quartz Filter	Hg^{part}
Probe & Nozzle Rinse	Hg^{++}
Heated Sample Line	Hg^{++}
KCl Impingers	Hg^{++}
HNO_3/H_2O_2 Impinger	Hg^0
$KMnO_4$ Impingers	Hg^0
HCl Rinse of $KMnO_4$ Impingers	Hg^0

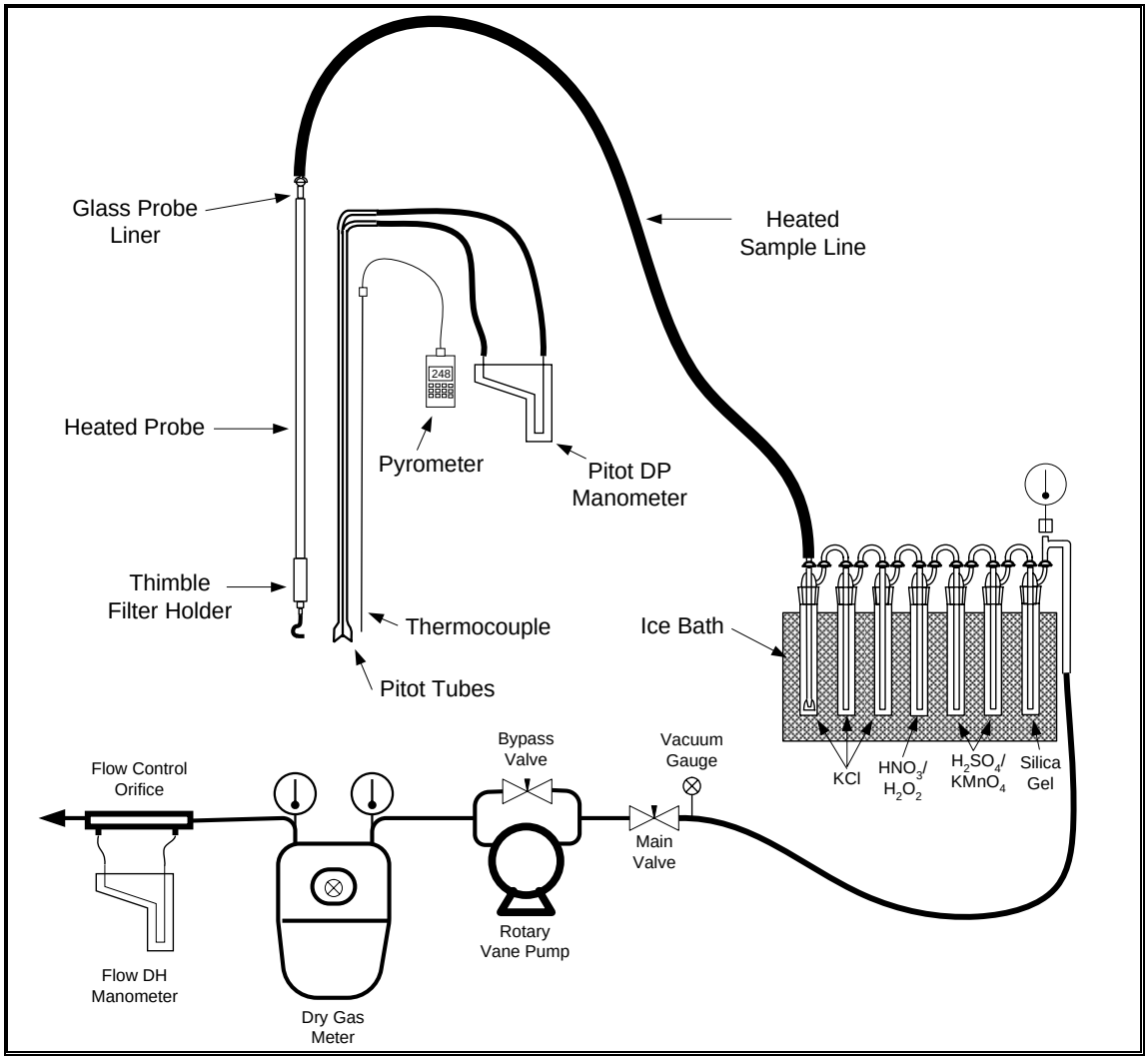

Figure 1. Ontario Hydro Sampling Train – Method 17 Configuration

The absorbing solutions were made fresh daily. The impingers were charged and the sampling components were transported to the required locations. The sampling trains were assembled, pre-heated, and checked for leaks. After passing the leak-check procedure, the sampling probe was inserted into the stack and sampling was initiated. The sample periods varied between 120 minutes for both test on day one and 110 and 90 minutes for tests three and four, respectively. Sample volumes ranged from 62.4 to 82.1 dscf. Oxygen readings were monitored at the outlet of the sampling trains using a Teledyne Model Max 5 portable analyzer (electrochemical O_2 sensor). At the completion of the sampling period, the sample trains were checked for leaks, purged for ten minutes, and then disassembled. The components were transported to the lab trailer for recovery. The mercury concentration of the individual impinger solutions was determined by cold vapor atomic absorption (CVAA) as specified in the methodology. The concentration of Hg on the solids was determined by acid digestion followed by CVAA (Method ASTM D6414).

The amount of mercury collected in the impinger solutions was determined as outlined in EPA Method 29 and the Ontario-Hydro Method. An aliquot of the impinger solution is acidified and the mercury is determined using cold vapor-atomic absorption spectroscopy. The atomic absorption spectrometer is calibrated with commercial mercury standards. The calibration is verified using NIST Standard 1633B. The calibration is reassessed periodically by analyzing a quality control standard. The instrument is recalibrated as required. Each sample matrix is analyzed as a set and an individual calibration curve is used for each set. Depending on sample type, selected samples are spiked with 2 or 10 ng/mL (ppb) of mercury and reanalyzed. Spike recovery must be within ±30% or the sample is diluted and reanalyzed. Selected samples are analyzed in duplicate. The duplicates must be within ±20% or the analyses are repeated.

Where sufficient solids are collected, particulate mercury is analyzed using a 0.5-1.0 gm sample of solids removed from the filter. In cases where the particulate catch is low the entire filter is digested. The samples are digested with aqua-regia in pressure vessels prior to analysis by CVAA.

5.0 Results

Sampling was conducted with the humidification on and off to determine the effect the water addition had on flue gas temperature and SO_3 and mercury concentrations. The humidification system decreased the flue gas temperatures by an average of 19 °F. The following sections detail the flue gas and process sampling results.

5.1 Flue Gas SO_3 Measurements

Flue gas SO_2 and SO_3 concentrations were determined using a controlled condensation method originally developed by the US EPA and modified by CONSOL R&D. A drawing of the CONSOL sampling train is shown in Figure 2.

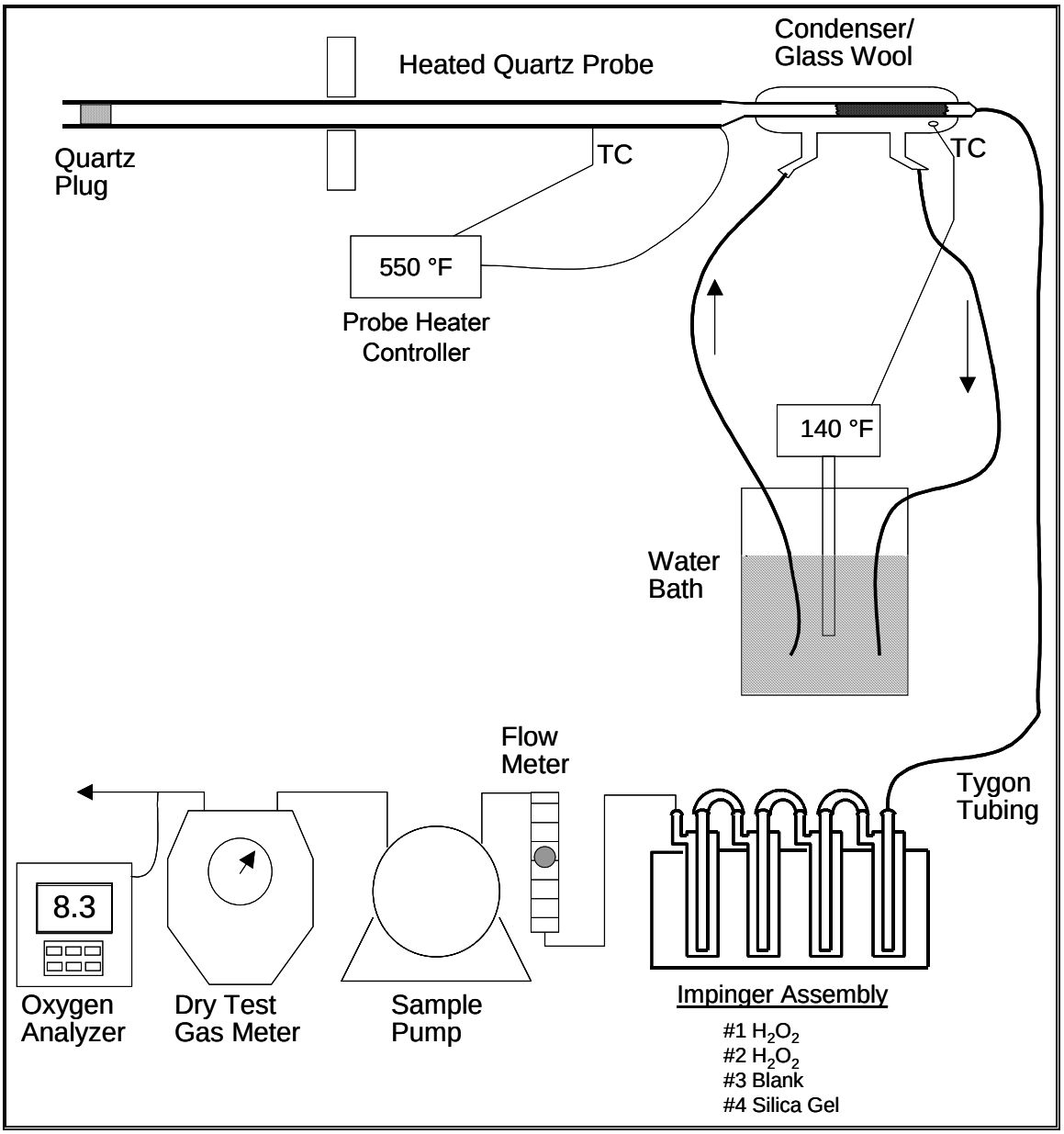

Figure 2. Controlled Condensation SO_3 Sampling Train

Flue gas was pulled through a temperature-controlled, quartz-lined probe fitted with a quartz wool plug to remove particulate matter. The probe temperature was maintained at ca. 550 °F to minimize SO_3 condensation and SO_2 oxidation. After the filter, the gas sample passed through a water-cooled condenser that is loosely packed with glass wool. A heated water bath was used to control the condenser temperature at 140 °F, which is below the acid dew point. Essentially, all of the SO_3 condenses. However, the condenser temperature was above the water dew point to prevent water condensation. The sample gas exited the condenser and entered a bank of miniature impingers. The

first two impingers contained a 3% H_2O_2 solution, which captures SO_2. The gas next passed through an empty impinger, and finally a silica gel-filled impinger for moisture removal. The gas was then conveyed through a rotameter, a vacuum pump, and a dry test meter.

Prior to the sampling, the system was leak checked under a vacuum of 10" of Hg. The sample probe was then positioned and gas was sampled for 60 minutes. The following data was recorded: (1) starting gas volume, (2) interval gas volume, (3) final gas volume, (4) probe temperature, (5) condenser temperature, (6) water bath temperature, (7) flue gas duct temperature, (8) dry test meter temperature, (9) flow meter setting, (10) system vacuum, (11) exit gas O_2 concentration, (12) barometric pressure, and (13) sampling time.

After sampling, the probe was removed from the stack, leak checked under a vacuum of 10" of Hg, purged with ambient air for 10 minutes, and the train components were disassembled for sample recovery. The sample train components were recovered in the following manner:

Quartz Plug - The quartz plug was removed from the probe tip, placed in a glass bottle, and extracted with 20 mL of isopropyl alcohol (IPA). The solids were filtered and the filtrate was diluted to a volume of 50 mL prior to analyses.

Sample Probe - The quartz probe liner was rinsed with IPA into a glass bottle and diluted to a volume of 50 mL prior to analysis.

Condenser - The condenser interior is rinsed with IPA into a glass bottle. Three complete rinses are utilized. The rinses are diluted to a volume of 50 mL prior to analysis.

Impingers - The contents of the first three impingers and connecting tubes are rinsed into a collection bottle with deionized (DI) water and diluted to a volume of 250 mL prior to analysis.

5.2 Mercury Sampling Test Results

Table 9 lists the Ontario Hydro sampling results for Unit 4. A complete listing of the sampling parameters and field data sheets is in Appendix A.

Table 9. Ontario Hydro Sampling Results

Location	Stack	Stack	Stack	Stack
Humidification Status	Inactive	Inactive	Active	Active
Test	1	2	3	4
Date	9/11/07	9/11/07	9/12/07	9/12/07
Start Time	915	1345	1000	1420
End Time	1128	1608	1238	1625
Sampling Time [min]	120	120	110	90
Sample Volume [dscf]	82.14	79.55	73.22	62.44
Barometric Pressure [“ Hg]	29.32	29.32	29.59	29.59
Static Pressure [“ H_2O]	-0.63	-0.58	-0.80	-0.73
O_2, measured [%]	6.7	6.6	7.6	6.6
CO_2, calculated [%]	13.5	13.5	12.6	13.6
Flue Gas Temperature [°F]	293	300	276	279
Gas Velocity [ft/sec]	76.6	76.23	73.92	72.95
Gas Flow Rate [dscfm]	229800	225200	228100	222100
Particulate Matter [gr/dscf]	0.0351	0.0638	0.0737	0.0738
Particle-bound Hg [$\mu g/m^3$]	0.092	0.157	0.103	0.111
Oxidized Hg [$\mu g/m^3$]	1.23	1.05	0.57	0.81
Elemental Hg [$\mu g/m^3$]	0.21	0.28	0.22	0.27
Total Hg [$\mu g/m^3$]	1.53	1.49	0.90	1.20
Hg Emissions [lb/TBtu]	1.42	1.35	0.82	1.02

5.3 Process Stream Samples

Coal, mill rejects, and fly ash samples were taken during each test.

5.3.1. Coal Samples and Results of Analyses

RPS operations personnel collected coal samples from the mill feeders during each flue gas sampling period. Each coal sample was stored and sealed in a 5-gallon plastic bucket. Total coal mercury input was determined by applying the coal mercury concentration to the calculated coal feed flow, which was derived from EPA Method 19 F-Factor calculations. Full analytical results are contained in Appendix B.

Table 10. Coal Sample Results

Sample ID	Coal 1	Coal 2	Coal 3	Coal 4
Test No.	BL-1	BL-2	BL-3	BL-4
Test Date	09/11/07	9/11/2007	09/12/07	09/12/07
Sample Location	Mill Feeders	Mill Feeders	Mill Feeders	Mill Feeders
Analytical No.	20075435	20075438	20075441	20075444
Total Moisture (%)	7.05	7.47	7.14	6.53
Moisture (%, as det'd)	1.82	1.97	1.71	1.36
Ash (%, dry)	17.97	18.33	18.70	17.08
Volatile Matter (%, dry)	19.72	19.4	18.76	18.83
HHV (Btu/lb, dry)	12,242	12,275	12,285	12,441
Total Sulfur (%, dry)	1.02	1.04	1.02	0.98
Total Carbon (%, dry)	70.67	70.47	70.76	71.65
Hydrogen (%, dry)	4.55	4.13	4.45	4.11
Nitrogen (%, dry)	1.20	1.31	1.07	1.12
Oxygen (%, dry, by diff.)	4.59	4.72	4.00	5.06
Chlorine (%, dry)	0.044	0.043	0.050	0.053
Mercury (ppm, dry)	0.198	0.176	0.201	0.158
Major Ash Element (%, dry)				
SiO_2	55.39	53.4	53.73	57.02
Al_2O_3	27.83	29.28	27.12	30.03
TiO_2	1.34	1.7	1.32	1.56
Fe_2O_3	8.11	7.56	8.27	6.33
CaO	1.76	1.63	2.46	1.05
MgO	0.74	0.78	0.96	0.65
Na_2O	0.28	0.24	0.24	0.23
K_2O	2.73	2.5	2.62	2.63
P_2O_5	0.33	0.3	0.31	0.25
SO_3	1.61	1.64	2.32	0.99

5.3.2. Mill Reject Samples

To capture the mercury removed by the coal mills, samples of the mill reject were collected for each test period. Prior to the start of each test the reject hoppers were emptied. At the end of the test period a sample of the reject material was collected from each hopper and the hoppers were again emptied prior to the start of the next test.

Table 11. Mill Reject Analytical Results.

Sample ID	Reject 1	Reject 2	Reject 3	Reject 4
Test No.	BL-1	BL-2	BL-3	BL-4
Test Date	09/11/07	9/11/2007	09/12/07	09/12/07
Sample Location	Reject Hoppers	Reject Hoppers	Reject Hoppers	Reject Hoppers
Analytical No.	20075437	20075440	20075443	20075446
Moisture (%, as det'd)	0.34	0.27	0.33	0.46
Ash (%, dry)	78.40	77.09	78.93	80.00
Volatile Matter (%, dry)	20.26	25.66	22.01	15.98
Total Sulfur (%, dry)	6.05	5.83	5.89	5.49
Total Carbon (%, dry)	7.64	6.86	6.54	7.24
Hydrogen (%, dry)	1.14	1.73	1.67	1.79
Nitrogen (%, dry)	0.01	0.01	0.01	0.01
Oxygen (%, dry, by diff.)	6.76	8.48	6.96	5.47
Chlorine (%, dry)	0.0050	0.0040	0.0040	0.0060
Mercury (ppm, dry)	1.17	0.839	1.084	0.943
Major Ash Element (%, dry)				
SiO_2	45.30	40.88	42.95	50.98
Al_2O_3	11.01	9.40	11.93	16.70
TiO_2	0.57	0.46	0.53	0.90
Fe_2O_3	17.87	15.98	15.12	15.25
CaO	16.81	26.27	20.44	9.65
MgO	1.98	2.35	2.20	1.62
Na_2O	0.13	0.11	0.26	0.29
K_2O	1.44	1.37	1.68	2.19
P_2O_5	0.16	0.16	0.08	0.09
SO_3	4.90	4.24	4.40	2.11

5.3.3. Fly Ash Samples

The ESP ash hoppers were empty at the beginning of each test. At the end of the test, the accumulated ash was evacuated. RPS operations personnel collected a sample of the ash at a point in time during the evacuation process that was not controlled and not recorded. It is widely known that ESP ash composition is variable between hoppers. As the ash migrates through the ESP, particles with the lowest resistivity are removed first, followed by those of higher resistivity. Carbon, having a high resistivity, will be found in greater concentrations in the hoppers of the last ESP fields. Since mercury readily adsorbs to the surface of carbon, higher mercury concentrations can also be expected in these hoppers. The mercury (and to a lesser extent, carbon) concentrations of the ash samples from tests two and three indicate that these samples were collected at a point in time later during the evacuation process than those from tests one and four. In any extent, we consider the ash samples from tests 2 and 3 to be non-representative. Table 12 summarizes the results of the fly ash analyses for tests 1 – 4.

Table 12. ESP Hopper Ash Analyses

Test No.	BL-1	BL-2	BL-3	BL-4
Test Date	09/11/07	9/11/2007	09/12/07	09/12/07
Moisture (%, as det'd)	0.16	0.16	0.23	0.11
Ash (%, dry)	62.25	60.70	53.76	83.19
Total Carbon (%, dry)	35.71	38.56	42.49	16.15
Chlorine (%, dry)	0.011	0.010	0.018	0.005
Mercury (ppm, dry)	1.18	1.76	2.29	1.19
Major Ash Element (%, dry)				
SiO_2	31.93	30.32	31.97	47.65
Al_2O_3	18.9	18.49	18.67	25.6
TiO_2	0.95	0.99	0.99	1.44
Fe_2O_3	6.74	6.37	5.78	5.56
CaO	1.09	1.05	0.72	1.2
MgO	0.49	0.47	0.41	0.6
Na_2O	0.17	0.14	0.13	0.22
K_2O	1.65	1.55	1.46	2.23
P_2O_5	0.33	0.31	0.26	0.29
SO_3	0.24	0.23	0.31	0.17

5.3.4. QA/QC

The sampling and analysis QA/QC procedures are described below.

- All sampling was conducted by personnel specifically trained and experienced in power plant sampling methods, including the Ontario-Hydro mercury sampling method and the controlled condensation method,
- The sampling equipment was maintained and calibrated as required,
- Consistent sample preparation and recovery procedures were used,
- Samples were logged and tracked under the direction of sample team leader,
- Individual calibration curves were developed for each sample matrix,
- NIST Standard Reference Material (SRM) and lab QC samples were analyzed to verify calibration curves,
- Duplicates of selected samples were analyzed to assure repeatability,
- Analyses of selected “spiked” samples were analyzed to assure sample recovery, and
- Interim data were reviewed to assure sample completeness.

All samples were obtained using the procedures described in EPA Method 5/17 and Ontario-Hydro Mercury Speciation method. Data were recorded on standard forms, which are included in Appendix A. The field data were reduced using standard spreadsheets. Copies of the summary sheets are included in Appendix A. To assure consistency, all of the Ontario-Hydro train components were prepared and recovered

under the supervision of a senior technician experienced in the Ontario-Hydro mercury speciation lab techniques. Copies of the recovery sheets are included in Appendix C.

The Ontario-Hydro sampling train analysis consisted of seven sub-samples. Each sub-sample analysis consisted of developing a calibration curve (absorbance versus mercury concentration in solution), checks of field and lab blanks, calibration checks with SRM and lab standards, selected duplicates and selected sample spikes. The laboratory summaries for each of these runs are contained in Appendix C.

5.3.5. Mass Balance for Mercury

One important criterion to gauge the overall quality of the tests is to conduct a mass balance to account for the mercury entering and leaving the plant during the time of the tests. Mercury entered the plant through coal, and left the plant via mill rejects, ESP ash, and stack emissions. The coal feed rates were determined with F-Factor calculations, which are based on coal composition and heating value. The amount of mercury leaving the stack was calculated from the Ontario-Hydro data. The ESP fly ash mass rates were calculated from coal ash rates and estimated ESP control efficiencies.

With all of the flow rates of the stream entering and leaving Unit 4 defined, the amount of mercury in the streams entering and leaving the unit was calculated. A material balance check for mercury was performed and the results are summarized in Table 13. The mercury mass balance closure is defined as the sum of the amounts of mercury in the streams leaving the system divided by the sum of the amounts of mercury in the streams entering the system. The mercury balances for tests 1 and 4 met the QA/QC criterion of 100±30% mercury balance closure.

It has been established that ESP ash composition varies by hopper; in particular, mercury concentration increases as the ash progresses through the ESP. The ash mercury concentrations reported for test runs two and three are significantly higher than those reported for tests one and four; this difference correlates with elevated mercury mass balances for tests two and three, indicating that there would be more mercury removed from the system than was introduced. Since the only parametric difference between the tests is the high mercury concentration of the ash, the measured concentrations cannot be representative of the actual mercury concentration.

Table 13. Mercury Material Balance Closures

Test No.	1	2	3	4
Hg input from Coal (mg/sec)	1.93	1.70	2.00	1.62
Total Hg Input (mg/sec)	1.93	1.70	2.00	1.62
Hg output via Mill Rejects (mg/sec)	0.03	0.02	0.03	0.02
Hg output via ESP hopper ash (mg/sec)	1.74	2.63	3.50	1.63
Hg output via stack flue gas (mg/sec)	0.17	0.16	0.10	0.13
Total Hg Output (mg/sec)	2.03	2.98	3.50	1.74
Hg material balance closure (output / input)	100%	165%	182%	110%
Average Hg material balance closure	139%			

APPENDIX A

Field Data Sheets

ONTARIO HYDRO Hg SAMPLING AND SPECIATION FIELD DATA SHEET

Page 1 of 2

TEST ID	BL-1	METER BOX	N-3	CAL. DATA: delta H	1.859	Comments:	
PLANT	R. Paul Smith	PITOT TUBE DESC	E1	Y	1.046		
LOCATION	Stack	PROBE LENGTH [ft]	5'	C(p)	0.839		
DATE	9-11-07	NOZZLE ID [inch]	7/32 B 0.216	FILTER BOX SETTING	NA		
OPERATOR(S)	BS, PR	%H_2O (Assumed)	8	PROBE HTR SETTING	280		
AMBIENT TEMP [°F]	~82°	FILTER ID	101	DUCT X-SECTION	circ ?	rect ?	other:
BAR. PRESS. [" Hg]	29.32	K FACTOR	~~1.49~~ 1.62	DUCT DIMENSIONS		DUCT AREA	

TRAVERSE POINT [port-inch]	CLOCK TIME (24-hr)	SAMPLE TIME [minute]	STATIC PRES [" H_2O]	PITOT HEAD [" H_2O]	METER DIFF PRESSURE [" H_2O]	METER VACUUM [" Hg]	METER READING [ft^3]	METER TEMP [oF] (6) inlet	METER TEMP [oF] (7) outlet	STACK TEMP [°F] (1)	PROBE TEMP [°F] (2)	~~FILTER BOX~~ H.L. [°F] (5)	LAST IMP TEMP [°F] (4)	METER EXHAUST O_2 [% vol]	METER EXHAUST CO_2 [% vol]
	0815	0					657.70								
2½		5		1.20	1.92	7	661.34	82	83	268	288	216	58	6.7	13.5
8		10		1.30	2.08	8	665.10	83	83	293	280	218	55	6.6	13.5
14⅓		15		1.30	2.08	8	668.88	85	83	301	281	219	58	6.7	13.5
21¼		20	-.620	1.40	2.22	8.5	672.77	87	83	302	280	220	62	6.7	13.5
30		25	K= 1.25	1.40	2.22	8.5	676.65	88	84	305	287	221	62	6.7	13.5
42¾		30		1.30	1.62	8	680.08	89	84	306	280	221	63	6.7	13.5
2½		35		1.20	1.50	7	683.32	89	84	~~222~~	288	230	63	6.5	13.6
8		40		1.30	1.60	8	686.60	90	85	304	288	230	57	6.8	13.4
14⅓		45		1.40	1.75	8.5	690.06	92	86	310	289	230	55	6.6	13.6
21¼		50	-.640	1.40	1.75	8.5	693.49	93	86	311	288	230	56	6.6	13.6
30		55		1.30	1.60	8.5	696.84	93	87	311	292	230	56	6.7	13.5
42¾		60		1.20	1.50	8.5	700.10	94	87	311	293	230	56	6.7	13.5
					L.C.	"OK"	700.30								
				RMS											
AVERAGE			-0.625	1.311	1.727		83.100	89.7		305.2	~~292.5~~			6.7	13.5

Sample Train Leak Checks: Pre Test OK ft^3 @ 10 in. Hg; Post Test OK ft^3 @ 12 in. Hg

Pitot Tube Leak Checks: PreTest OK @ 7 in. H_2O; Post Test OK @ 7 in. H_2O

NOTE: Purge for 10 minutes at end of sampling.

CONSOLENERGY

ONTARIO HYDRO Hg SAMPLING AND SPECIATION FIELD DATA SHEET

TEST ID	BL-1	METER BOX		CAL. DATA: delta H	
PLANT	R. Paul Smith	PITOT TUBE DESC		Y	
LOCATION	Stack	PROBE LENGTH [ft]		C(p)	
DATE		NOZZLE ID [inch]		FILTER BOX SETTING	NA
OPERATOR(S)		%H_2O (Assumed)	8	PROBE HTR SETTING	
AMBIENT TEMP [°F]		FILTER ID		DUCT X-SECTION	circ ? rect ? other:
BAR. PRESS. [" Hg]		K FACTOR		DUCT DIMENSIONS	DUCT AREA

Comments:

TRAVERSE POINT [port-inch]	CLOCK TIME (24-hr)	SAMPLE TIME [minute]	STATIC PRES [" H_2O]	PITOT HEAD [" H_2O]	METER DIFF PRESSURE [" H_2O]	METER VACUUM [" Hg]	METER READING [ft^3]	METER TEMP [oF] inlet	METER TEMP [oF] outlet	STACK TEMP [°F]	PROBE TEMP [°F]	FILTER BOX [°F]	LAST IMP TEMP [°F]	METER EXHAUST O_2 [% vol]	METER EXHAUST CO_2 [% vol]
		60					700.30								
1		65		1.30	1.60	9	703.67	93	88	298	282	236	55	6.7	13.5
2		70		1.40	1.75	9.5	707.14	93	89	306	285	237	54	6.6	13.6
3		75		1.40	1.75	10	710.63	95	89	312	286	239	54	6.7	13.5
4		80	-.620	1.40	1.75	10	714.18	96	90	313	287	239	56	7.2	13.0
5		85		1.30	1.60	10	717.50	96	90	313	282	240	57	6.7	13.5
6		90		1.20	1.50	9.5	720.77	96	90	313	289	239	58	6.7	13.5
1		95		1.30	1.60	9.5	724.13	95	91	286	293	237	59	6.7	13.5
2		100		1.30	1.60	9.5	727.47	96	91	310	282	237	58	6.7	13.5
3		105		1.30	1.60	10	730.82	96	91	312	284	237	59	6.8	13.4
4		110	-.620	1.40	1.75	10.5	734.28	97	91	313	292	237	60	6.7	13.5
5		115		1.30	1.60	10	737.69	96	91	311	284	237	60	6.9	13.3
6		120		1.20	1.50	10	741.00	96	91	310	280	237	61	6.7	13.5
	1128														
AVERAGE															

Sample Train Leak Checks: Pre Test _____ ft^3 @ _____ in. Hg; Post Test _____ ft^3 @ _____ in. Hg

Pitot Tube Leak Checks: PreTest _____ @ _____ in. H_2O; Post Test _____ @ _____ in. H_2O

NOTE: Purge for 10 minutes at end of sampling.

CONSOLENERGY

ONTARIO HYDRO Hg SAMPLING AND SPECIATION FIELD DATA SHEET

TEST ID	Run 1	METER BOX	N-2	CAL. DATA: delta H	1.395	Comments:	Coal feed lost momentarily @ 1305
PLANT	R. Paul Smith	PITOT TUBE DESC	S-50	Y	0.967		* Could not pull required ΔH
LOCATION	~~Quench~~ ESP Inlet	PROBE LENGTH [ft]		C(p)	0.804		
DATE	9-11-07	NOZZLE ID [inch]	.250 ¼E	FILTER BOX SETTING	NA		
OPERATOR(S)	BG / JL	%H_2O (Assumed)	8	PROBE HTR SETTING	325		
AMBIENT TEMP [°F]	78	FILTER ID	1069	DUCT X-SECTION	circ ?	rect ?	other:
BAR. PRESS. [" Hg]	29.32	K FACTOR	2.46	DUCT DIMENSIONS		DUCT AREA	

TRAVERSE POINT [port-inch]	CLOCK TIME (24-hr)	SAMPLE TIME [minute]	STATIC PRES [" H_2O]	PITOT HEAD [" H_2O]	METER DIFF PRESSURE [" H_2O]	METER VACUUM [" Hg]	METER READING [ft^3]	METER TEMP [oF] inlet	METER TEMP [oF] outlet	STACK TEMP [°F]	PROBE TEMP [°F]	FILTER BOX [°F]	LAST IMP TEMP [°F]	METER EXHAUST O_2 [% vol]	METER EXHAUST CO_2 [% vol]
	13:53	0					326.423								
5-B 8.9	13:03	5		0.14	0.35	3.0	328.330	70	70	314	310	NA	57		
26.8	14:08	10		0.17	0.41	4.0	330.085	70	70	315	314		54		
44.7	14:13	15	-5.7	0.22	0.53	4.5	332.123	70	70	324	297		53	4.3	15.7
62.6	14:18	20		0.16	0.39	4.0	333.885	70	70	322	294		52		
	14:19														
5-D 1	14:24	25		0.27	~~0.27~~ 0.66	5.0	336.135	71	70	296	311		54		
2	14:29	30		0.23	~~0.23~~ 0.56	5.0	338.263	72	71	313	309		52	6.6	13.6
3	14:34	35	-5.3	0.24	~~0.24~~ 0.58	6.0	340.380	72	71	316	301		53	6.2	14.0
4	14:39	40		0.29	0.70	7.0	342.684	72	71	320	300		53	5.8	14.4
	14:39														
5-F 1	14:44	45		0.25	0.60	7.0	344.942	72	71	303	300		52	5.6	14.5
2	14:49	50		0.32	0.77	11.0	347.275	72	71	315	298		51	4.9	15.2
3	14:54	55		0.28	0.68	13.0	349.506	72	71	318	298		50	3.5	16.5
4	14:59	60		0.36	0.87	>17.0	351.654	72	71	317	301		51		
				RMS											
AVERAGE			-5.4	0.246	0.602		51.464	71.5		312.5				5.3	15.0

*

Sample Train Leak Checks:	Pre Test	.002 ft^3 @	12 in. Hg	Pitot Tube Leak Checks:	PreTest	✓ @	7 in. H_2O
	Post Test	~~0~~ .002 ft^3 @	16 in. Hg		Post Test	✓ @	7 in. H_2O

NOTE: Purge for 10 minutes at end of sampling.

CONSOL ENERGY

ONTARIO HYDRO Hg SAMPLING AND SPECIATION FIELD DATA SHEET

TEST ID	ESP-1	METER BOX	N-2	CAL. DATA: delta H		Comments:	Changed filter at 60 minutes
PLANT	R. Paul Smith	PITOT TUBE DESC	S-50	Y			
LOCATION	~~Stack~~ ESP Inlet	PROBE LENGTH [ft]	8	C(p)			
DATE	9-11-07	NOZZLE ID [inch]	4" & 0.250	FILTER BOX SETTING	NA		
OPERATOR(S)		%H_2O (Assumed)	8	PROBE HTR SETTING			
AMBIENT TEMP [°F]		FILTER ID	1070	DUCT X-SECTION	circ ?	rect ?	other:
BAR. PRESS. [" Hg]		K FACTOR	2.46	DUCT DIMENSIONS		DUCT AREA	

TRAVERSE POINT [port-inch]	CLOCK TIME (24-hr)	SAMPLE TIME [minute]	STATIC PRES [" H_2O]	PITOT HEAD [" H_2O]	METER DIFF PRESSURE [" H_2O]	METER VACUUM [" Hg]	METER READING [ft^3]	METER TEMP [oF] inlet	METER TEMP [oF] outlet	STACK TEMP [°F]	PROBE TEMP [°F]	FILTER BOX [°F]	LAST IMP TEMP [°F]	METER EXHAUST O_2 [% vol]	METER EXHAUST CO_2 [% vol]
	1502	60					351.730								
N-B-1	1507	65		0.20	0.48	3.5	353.662	72	71	312	301	NA	53	4.2	15.9
2	1512	70		0.26	0.63	5.0	355.95	72	72	323	298		54	3.8	16.2
3	1517	75		0.26	0.63	5.0	358.104	72	72	337	293		53	3.7	16.3
4	1522	80		0.30	0.73	6.0	360.480	72	72	332	293		52	4.3	15.8
	1522														
N-D-1	1527	85		0.20	0.48	5.0	362.468	72	72	303	296		54	~~5.1~~	~~15.0~~
2	1532	90		0.21	0.51	6.0	364.478	72	72	302	307		54	5.8	14.3
3	1537	95		0.19	0.46	6.0	366.390	73	72	295	306		54	7.5	12.8
4	1542	100		0.25	0.60	7.0	368.530	72	72	293	305		54	8.5	—
	1543														
N-F-1	1548	105		0.23	0.56	7.0	370.722	72	72	299	301		56		
2	1553	110		0.32	0.77	11.0	373.710	73	72	312	303		55	4.7	15.4
3	1558	115		0.32	0.77	13.0	375.560	73	72	310	296		53	4.6	15.5
4	1603	120		0.30	0.73	15.0	377.337	73	72	309	302		55	5.7	14.4
AVERAGE															

Sample Train Leak Checks: Pre Test _____ ft^3 @ _____ in. Hg; Post Test _____ ft^3 @ _____ in. Hg

Pitot Tube Leak Checks: PreTest _____ @ _____ in. H_2O; Post Test _____ @ _____ in. H_2O

NOTE: Purge for 10 minutes at end of sampling.

CONSOL ENERGY

ONTARIO HYDRO Hg SAMPLING AND SPECIATION FIELD DATA SHEET

TEST ID	BL-2	METER BOX	2-3	CAL. DATA: delta H	1.859
PLANT	R. Paul Smith	PITOT TUBE DESC	E1	Y	1.046
LOCATION	Stack	PROBE LENGTH [ft]	5'	C(p)	
DATE	9-11-07	NOZZLE ID [inch]		FILTER BOX SETTING	NA
OPERATOR(S)	BS, PR	%H_2O (Assumed)	8	PROBE HTR SETTING	280
AMBIENT TEMP [°F]	~86°	FILTER ID	10X3	DUCT X-SECTION	circ ? / rect ? / other:
BAR. PRESS. [" Hg]	29.32	K FACTOR	1.25	DUCT DIMENSIONS / DUCT AREA	

Comments:

TRAVERSE POINT [port-inch]	CLOCK TIME (24-hr)	SAMPLE TIME [minute]	STATIC PRES [" H_2O]	PITOT HEAD [" H_2O]	METER DIFF PRESSURE [" H_2O]	METER VACUUM [" Hg]	METER READING [ft^3]	METER TEMP [oF] (6) inlet	METER TEMP [oF] (7) outlet	STACK TEMP [°F] (1)	PROBE TEMP [°F] (2)	~~FILTER BOX~~ [°F] H.L (5)	LAST IMP TEMP [°F] (4)	METER EXHAUST O_2 [% vol]	METER EXHAUST CO_2 [% vol]
	1345	0					756.50								
1		5		1.20	1.50	5.5	759.83	84	85	247	280	189	55	6.7	13.5
2		10		1.20	1.50	5.5	763.07	86	84	276	283	194	52	6.8	13.4
3		15		1.30	1.60	6	766.37	88	85	293	289	197	54	6.5	13.6
4		20	-.580	1.30	1.60	7	769.68	89	86	298	280	197	54	7.4	12.7
5		25		1.30	1.60	7.5	773.02	90	86	302	288	197	55	6.5	13.6
6		30		1.20	1.50	7.5	776.26	91	86	303	290	197	55	6.4	13.7
1		35		1.30	1.60	10	779.59	91	86	288	288	201	56	6.7	13.5
2		40		1.40	1.75	12	783.10	92	87	305	288	203	54	6.7	13.5
3		45		1.40	1.75	14	786.52	93	87	310	287	204	55	6.5	13.6
4		50	-.560	1.30	1.60	15	789.88	93	88	310	290	209	57	6.7	13.5
5		55		1.20	1.50	15	793.13	93	88	310	292	211	58	6.7	13.5
6		60		1.20	1.50	16.5	796.34	93	88	311	288	211	58	6.5	13.6
							796.70	CHANGED FILTER 103 & REPLACED							
								WITH FILTER 102 L.C. "OK"							
				RMS											
AVERAGE			-0.58	1.282	1.544		80.54	89.9		299.9				6.6	13.5

Sample Train Leak Checks:	Pre Test	OK ft^3 @ 10 in. Hg	Pitot Tube Leak Checks:	PreTest	OK @ 7 in. H_2O
	Post Test	OK ft^3 @ 10 in. Hg		Post Test	OK @ 7 in. H_2O

CONSOL ENERGY

NOTE: Purge for 10 minutes at end of sampling.

ONTARIO HYDRO Hg SAMPLING AND SPECIATION FIELD DATA SHEET

TEST ID	B2-2	METER BOX		CAL. DATA: delta H		Comments:	
PLANT	R. Paul Smith	PITOT TUBE DESC		Y			
LOCATION	Stack	PROBE LENGTH [ft]		C(p)			
DATE		NOZZLE ID [inch]		FILTER BOX SETTING	NA		
OPERATOR(S)		%H_2O (Assumed)	8	PROBE HTR SETTING			
AMBIENT TEMP [°F]		FILTER ID	102	DUCT X-SECTION	circ ?	rect ?	other:
BAR. PRESS. [" Hg]		K FACTOR		DUCT DIMENSIONS		DUCT AREA	

TRAVERSE POINT [port-inch]	CLOCK TIME (24-hr)	SAMPLE TIME [minute]	STATIC PRES [" H_2O]	PITOT HEAD [" H_2O]	METER DIFF PRESSURE [" H_2O]	METER VACUUM [" Hg]	METER READING [ft^3]	METER TEMP [oF] inlet	METER TEMP [oF] outlet	STACK TEMP [°F]	PROBE TEMP [°F]	FILTER BOX [°F]	LAST IMP TEMP [°F]	METER EXHAUST O_2 [% vol]	METER EXHAUST CO_2 [% vol]
		60					796.70								
1		65		1.30	1.60	6	800.10	91	89	246	283	223	57	6.6	13.6
2		70		1.30	1.60	7	803.47	92	89	308	250	224	57	6.5	13.6
3		75		1.40	1.75	8	806.95	94	89	313	285	224	58	6.6	13.6
4		80	-.580	1.40	1.75	8.5	810.42	95	90	313	290	222	60	6.5	13.6
5		85		1.30	1.60	8.5	813.84	95	90	313	282	222	59	6.4	13.7
6		90		1.20	1.50	8.5	817.20	96	90	312	288	222	60	6.7	13.5
1		95		1.10	1.38	8	820.30	93	90	281	279	236	60	6.9	13.3
2		100		1.30	1.60	9	823.70	93	90	307	287	237	61	6.6	13.6
3		105		1.40	1.75	10	827.22	93	90	313	288	239	61	6.7	13.5
4		110	-.600	1.40	1.75	10	830.74	93	90	314	287	240	62	6.8	13.5
5		115		1.30	1.60	9.5	834.17	93	90	314	289	240	63	7.1	13.1
6		120		1.10	1.38	9	837.40	93	90	312	287	241	64	6.8	13.5
	1608														
AVERAGE															

Sample Train Leak Checks: Pre Test _____ ft^3 @ _____ in. Hg; Post Test _____ ft^3 @ _____ in. Hg

Pitot Tube Leak Checks: PreTest _____ @ _____ in. H_2O; Post Test _____ @ _____ in. H_2O

CONSOLENERGY

NOTE: Purge for 10 minutes at end of sampling.

ONTARIO HYDRO Hg SAMPLING AND SPECIATION FIELD DATA SHEET

TEST ID	BL-3	METER BOX	W-3	CAL. DATA: delta H	1.859
PLANT	R. Paul Smith	PITOT TUBE DESC	E-1	Y	1.046
LOCATION	Stack	PROBE LENGTH [ft]	5'	C(p)	
DATE	9-12-07	NOZZLE ID [inch]		FILTER BOX SETTING	NA
OPERATOR(S)	BS, PR	%H_2O (Assumed)	8	PROBE HTR SETTING	280
AMBIENT TEMP [°F]	~80°	FILTER ID	104 & 106	DUCT X-SECTION	circ ? / rect ? / other:
BAR. PRESS. [" Hg]	29.59	K FACTOR	1.25	DUCT DIMENSIONS / DUCT AREA	

Comments:

TRAVERSE POINT [port-inch]	CLOCK TIME (24-hr)	SAMPLE TIME [minute]	STATIC PRES [" H_2O]	PITOT HEAD [" H_2O]	METER DIFF PRESSURE [" H_2O]	METER VACUUM [" Hg]	METER READING [ft^3]	METER TEMP [oF] inlet (6)	METER TEMP [oF] outlet (7)	STACK TEMP [°F] (1)	PROBE TEMP [°F] (2)	~~FILTER BOX~~ [°F] H.L. (5)	LAST IMP TEMP [°F] (4)	METER EXHAUST O_2 [% vol]	METER EXHAUST CO_2 [% vol]
	1000	0					845.00								
1 -5.25		5		1.20	1.50	6	848.35	81	80	272	289	200	55	6.8	13.4
2 -17.50		10		1.40	1.75	7	851.82	84	81	281	291	203	53	7.1	13.1
3 -35.50		15		1.40	1.75	7	855.28	86	81	284	283	204	55	7.5	12.7
4		20	-.901	1.40	1.75	8	858.73	87	81	284	284	204	56	7.6	12.6
5		25		1.30	1.60	8	862.06	88	82	283	289	206	57	7.5	12.7
6 -5.25		30		1.20	1.50	9	865.27	88	82	281	286	206	57	7.3	12.9
-17.50															
-35.50															
1		35		1.20	1.50	10	868.50	88	83	~~237~~	291	200	58	7.7	12.5
2		40		1.20	1.50	11.5	871.73	89	83	272	282	196	58	7.6	12.6
3 -5.25		45		1.30	1.60	13.5	875.05	89	83	279	287	196	58	7.5	12.7
4 -17.50		50	-.816	1.20	1.50	14	878.23	89	83	280	287	195	60	7.6	12.6
5 -35.50		55		1.20	1.50	16	881.40	89	84	279	291	194	61	7.5	12.7
6		60		1.10	1.38	17	884.53	89	84	279	287	194	61	7.5	12.7
-5.25							886.80	CHANGED FILTER 104 AND REPLACED							
-17.50								WITH FILTER 106 L.C. OK							
-35.50															
				RMS	1.602										
AVERAGE			-0.824	1.253	~~1.591~~		73.15	87.6		275.3				7.6	12.6

Sample Train Leak Checks:	Pre Test	OK ft^3 @ 10 in. Hg	Pitot Tube Leak Checks:	PreTest	OK @ 7 in. H_2O
	Post Test	OK ft^3 @ 17 in. Hg		Post Test	OK @ 7 in. H_2O

NOTE: Purge for 10 minutes at end of sampling.

CONSOLENERGY

ONTARIO HYDRO Hg SAMPLING AND SPECIATION FIELD DATA SHEET

TEST ID	BL-3
PLANT	R. Paul Smith
LOCATION	Stack
DATE	
OPERATOR(S)	
AMBIENT TEMP [°F]	
BAR. PRESS. [" Hg]	

METER BOX	
PITOT TUBE DESC	
PROBE LENGTH [ft]	
NOZZLE ID [inch]	
%H_2O (Assumed)	8
FILTER ID	104 & 106
K FACTOR	

CAL. DATA: delta H		Comments:	
Y			
C(p)			
FILTER BOX SETTING	NA		
PROBE HTR SETTING			
DUCT X-SECTION	circ ?	rect ?	other:
DUCT DIMENSIONS		DUCT AREA	

TRAVERSE POINT [port-inch]	CLOCK TIME (24-hr)	SAMPLE TIME [minute]	STATIC PRES [" H_2O]	PITOT HEAD [" H_2O]	METER DIFF PRESSURE [" H_2O]	METER VACUUM [" Hg]	METER READING [ft^3]	METER TEMP [oF] inlet	METER TEMP [oF] outlet	STACK TEMP [°F]	PROBE TEMP [°F]	FILTER BOX [°F]	LAST IMP TEMP [°F]	METER EXHAUST O_2 [% vol]	METER EXHAUST CO_2 [% vol]
		60					886.80								
1 -5.25		65		1.30	1.60	5.5	890.14	88	86	255	288	184	57	7.5	12.7
2 -17.50		70		1.40	1.75	6	893.60	93	86	279	290	186	54	7.9	12.3
3 -35.50		75		1.40	1.75	7	897.08	94	87	286	284	185	55	7.8	12.4
4		80	-.809	1.30	1.60	6.5	900.44	96	88	280	287	185	55	8.1	12.1
5		85		1.20	1.50	7	—	96	88	279	288	184	56	8.1	12.1
6 -5.25		90		1.10	1.38	7	906.80	96	89	278	290	184	57	8.1	12.1
-17.50															
-35.50															
1		95		1.10	1.38	8	909.88	94	89	233	284	186	56	7.5	12.7
2	K=	100		1.20	1.50	10	913.09	94	89	272	285	186	56	7.4	12.8
3 -5.25	1.60	105		1.30	2.05	14	916.77	95	89	278	285	187	56	7.4	12.8
4 -17.50		110	-.691	1.20	1.90	16	920.42	94	88	278	292	188	57	7.4	12.8
5 -35.50		115													
6		120													
-5.25	1238														
-17.50															
-35.50															
AVERAGE															

Sample Train Leak Checks: Pre Test _____ ft^3 @ _____ in. Hg; Post Test _____ ft^3 @ _____ in. Hg

Pitot Tube Leak Checks: PreTest _____ @ _____ in. H_2O; Post Test _____ @ _____ in. H_2O

CONSOLENERGY

NOTE: Purge for 10 minutes at end of sampling.

ONTARIO HYDRO Hg SAMPLING AND SPECIATION FIELD DATA SHEET

Page 1 of 2

TEST ID	TBL-4	METER BOX	~0-3	CAL. DATA: delta H	1.859
PLANT	R. Paul Smith	PITOT TUBE DESC	E-1	Y	1.046
LOCATION	Stack	PROBE LENGTH [ft]	5'	C(p)	
DATE	9-12-07	NOZZLE ID [inch]		FILTER BOX SETTING	NA
OPERATOR(S)	BS, PR	%H_2O (Assumed)	8	PROBE HTR SETTING	280
AMBIENT TEMP [°F]	~82°	FILTER ID	105 & 107	DUCT X-SECTION	circ ? / rect ? / other:
BAR. PRESS. [" Hg]	29.59	K FACTOR	1.60	DUCT DIMENSIONS / DUCT AREA	

Comments:

TRAVERSE POINT [port-inch]	CLOCK TIME (24-hr)	SAMPLE TIME [minute]	STATIC PRES [" H_2O]	PITOT HEAD [" H_2O]	METER DIFF PRESSURE [" H_2O]	METER VACUUM [" Hg]	METER READING [ft^3]	METER TEMP [oF] (6) inlet	METER TEMP [oF] (7) outlet	STACK TEMP [°F] (1)	PROBE TEMP [°F] (2)	~~FILTER BOX~~ [°F] H.L. (5)	LAST IMP TEMP [°F] (4)	METER EXHAUST O_2 [% vol]	METER EXHAUST CO_2 [% vol]
	1420	0					925.90								
1 -5.25		5		1.20	1.90	7	929.52	86	86	252	287	184	65	6.7	13.5
2 -17.50		10		1.30	2.05	8	933.27	87	86	278	287	190	66	6.6	13.6
3 -35.50		15		1.30	2.05	9	937.03	89	86	281	288	193	68	6.6	13.6
4		20	-.654	1.30	2.05	10.5	940.77	90	86	281	283	197	68	6.5	13.6
5		25	K=	1.20	1.90	12	944.38	91	87	281	290	198	65	6.5	13.6
6 -5.25		30	1.40	1.10	1.52	11	947.69	92	87	280	292	200	60	6.5	13.6
-17.50															
-35.50															
1	*VAC	35		1.30	1.80	14	951.22	92	87	276	291	233	59	6.5	13.6
2	LH926E	40		1.30	1.80	17	954.72	93	88	279	290	233	59	6.5	13.6
3 -5.25	FLT.	45		1.30	1.80	20	958.31	93	89	282	291	232	60	6.5	13.6
4 -17.50	#107	50		1.30	1.80	6.5	~~959.50~~ 963.00	96	91	282	287	215	57	6.5	13.6
5 -35.50	L.C.	55		1.20	1.68	7		98	92	283	282	217	55	6.8	13.4
6	"OK"	60		1.20	1.68	8	969.81	99	92	282	283	217	55	6.7	13.5
-5.25															
-17.50															
-35.50															
				KLS											
AVERAGE			-0.726	1.215	1.757		62.81	92.1		279.3				6.6	13.6

Sample Train Leak Checks: Pre Test OK ft^3 @ 10 in. Hg; Post Test _____ ft^3 @ _____ in. Hg

Pitot Tube Leak Checks: PreTest OK @ 7 in. H_2O; Post Test _____ @ _____ in. H_2O

CONSOL ENERGY

NOTE: Purge for 10 minutes at end of sampling.

ONTARIO HYDRO Hg SAMPLING AND SPECIATION FIELD DATA SHEET

TEST ID	BL-4
PLANT	R. Paul Smith
LOCATION	Stack
DATE	
OPERATOR(S)	
AMBIENT TEMP [°F]	
BAR. PRESS. [" Hg]	

METER BOX	
PITOT TUBE DESC	
PROBE LENGTH [ft]	
NOZZLE ID [inch]	
%H_2O (Assumed)	8
FILTER ID	1052107
K FACTOR	

CAL. DATA: delta H			
Y			
C(p)			
FILTER BOX SETTING	NA		
PROBE HTR SETTING			
DUCT X-SECTION	circ ?	rect ?	other:
DUCT DIMENSIONS		DUCT AREA	

Comments:

TRAVERSE POINT [port-inch]	CLOCK TIME (24-hr)	SAMPLE TIME [minute]	STATIC PRES [" H_2O]	PITOT HEAD [" H_2O]	METER DIFF PRESSURE [" H_2O]	METER VACUUM [" Hg]	METER READING [ft^3]	METER TEMP [oF] inlet	METER TEMP [oF] outlet	STACK TEMP [°F]	PROBE TEMP [°F]	FILTER BOX [°F]	LAST IMP TEMP [°F]	METER EXHAUST O_2 [% vol]	METER EXHAUST CO_2 [% vol]
		60					969.81								
1 -5.25		65		1.10	1.52	8	973.02	98	92	~~237~~	290	209	56	6.6	13.6
2 -17.50		70		1.20	1.68	10	976.43	99	92	278	286	211	55	6.6	13.6
3 -35.50		75		1.20	1.68	11	979.87	99	93	283	292	213	55	6.6	13.6
4		80	.798	1.20	1.68	10	983.36	100	93	284	281	214	56	6.5	13.5
5		85		1.10	1.52	9	986.67	100	94	284	291	215	57	6.5	13.6
6 -5.25		90		1.10	1.52	9	989.96	100	94	282	290	215	58	6.6	13.6
-17.50															
-35.50	1625														
1		95													
2		100													
3 -5.25		105													
4 -17.50		110													
5 -35.50		115													
6		120													
-5.25															
-17.50															
-35.50															
AVERAGE															

Sample Train Leak Checks: Pre Test _____ ft^3 @ _____ in. Hg
Post Test _____ ft^3 @ _____ in. Hg

Pitot Tube Leak Checks: PreTest _____ @ _____ in. H_2O
Post Test _____ @ _____ in. H_2O

CONSOL ENERGY

NOTE: Purge for 10 minutes at end of sampling.

SO_3 FIELD SAMPLING DATA SHEET

PLANT	R. Paul Smith
LOCATION	ESP Inlet
DUCT DIMENSIONS	2 x (188" x 71.5")
DUCT AREA	2 x 91.35 = 186.69 ft2
DATE	9/11/07
TIME	Start- 1615 Stop- 1715
SAMPLE BOX	
METER BOX	NuTech # 4
PITOT TUBE DESC	NA
OPERATOR(S)	BG & JL

AMBIENT TEMP [°F]	75
BAROMETRIC PRESSURE [" Hg]	29.32
$\%H_2O$ (Assumed)	8
PROBE LENGTH [ft]	6
NOZZLE ID [inch]	XXXX
CALIBRATION FACTORS: delta H	XXXX
Y	.983
C(p)	NA
K	XXXX

WATER BATH SETTING	140
PROBE HTR SETTING	550
DUCT X-SECTION	circ ? rect ? other:
POSITION OF PORT A	

Page _____ of _____

DRY MOLECULAR WEIGHT (Assumed)	
WET MOLECULAR WEIGHT (Assumed)	

(Assumed=)

TRAVRSE POINT [inch]	SAMPLE TIME [minute]	STATIC PRESSURE [" H_2O]	STACK TEMP [°F]	PITOT HEAD [" H_2O]	ROTOMETER SETTING	METER READING [ft^3]	METER TEMP [°F] inlet	METER TEMP [°F] outlet	CONDENSER TEMP [°F]	PROBE TEMP [°F]	WATER BATH TEMP [°F]	METER VACUUM [" Hg]	O_2 METER [%]	CONTROL ROOM O_2 [%]	CONTROL ROOM DUCT TEMP [—uo°F]
						124.576									
	0 - 10		307	NA	1 RTM	125.61	77	75	141	546	NA	7.5			
	10 - 20		347		1 RTM	126.70	77	75	139	558		10			
	20 - 30		341		1 RTM	127.81	78	75	140	551		10			
			~~338~~		~~1 RTM~~	~~128.8~~	~~78~~	~~75~~	~~140~~	~~560~~		~~10~~			
	30 - 40		338		1RTM	128.8	78	75	140	560		10			
	40 - 50		324		1RTM	129.8	79	77	140	547		10			
	50 - 60		329		1RTM	130.846	79	77	140	556		10			
AVERAGE			330.2			6.27	76.8		140						

REMARKS Pre-Leak Check: Post-Leak Check:

Condenser Temp = 140°F

Sampling Rate=3 lpm=0.1 ft^3/min

	ALIQUOT / VOLUME	TITRATION (ml)		lb/dscf	ppmv,act	ppmv,cor
PLUG--SO_3						
PROBE--SO_3						
CONDENSER--SO_3						
BLANK						
IMPINGER (H_2O_2)--SO_2						

Gas Vol, dscf

$BaCl_2$ NORMALITY

CONSOL ENERGY

O:\RdAppRes\STACK\datasheets\SO3SHEET
09/07/07

SO_3 FIELD SAMPLING DATA SHEET

PLANT	R. Paul Smith
LOCATION	ESP Inlet
DUCT DIMENSIONS	2 x (188" x 71.5")
DUCT AREA	2 x 91.35 = 186.69 ft2
DATE	9/11/07
TIME	Start- 1740 Stop- 1841
SAMPLE BOX	
METER BOX	NuTech # 4
PITOT TUBE DESC	NA
OPERATOR(S)	BG, PR, BPS

AMBIENT TEMP [°F]	70
BAROMETRIC PRESSURE [" Hg]	29.32
%H_2O (Assumed)	4
PROBE LENGTH [ft]	4
NOZZLE ID [inch]	XXXX
CALIBRATION FACTORS: delta H	XXXX
Y	.983
C(p)	NA
K	XXXX

WATER BATH SETTING	140
PROBE HTR SETTING	550
DUCT X-SECTION	circ ? rect ? other:
POSITION OF PORT A	

Page _____ of _____

DRY MOLECULAR WEIGHT (Assumed)	
WET MOLECULAR WEIGHT (Assumed)	

(Assumed=)

TRAVRSE POINT [inch]	SAMPLE TIME [minute]	STATIC PRESSURE [" H_2O]	STACK TEMP [°F]	PITOT HEAD [" H_2O]	ROTOMETER SETTING	METER READING [ft^3]	METER TEMP [°F] inlet	METER TEMP [°F] outlet	CONDENSER TEMP [°F]	PROBE TEMP [°F]	WATER BATH TEMP [°F]	METER VACUUM [" Hg]	O_2 METER [%]	CONTROL ROOM O_2 [%]	CONTROL ROOM DUCT TEMP [—uo°F]
						131.514									
	0 - 10	NA	299	NA	1RTM	132.74	78	77	141	561	140	10			
	10 - 20	↓	308	↓	1RTM	133.7	78	77	140	570	139	10	6.6		
	20 - 30		325		1RTM	134.7	79	77	144	543	144	10	4.0		
			~~338~~		~~1RTM~~	~~135.8~~	~~79~~	~~77~~	~~140~~	~~562~~	~~140~~	~~10~~	~~4.4~~		
	30 - 40	338	~~342~~		1RTM	135.8	~~80~~ 79	~~77~~ 77	140	562	140	10	4.4		
	40 - 50		342		1RTM	136.2	80	77	140	558	140	10	3.9		
	50 - 60	↓	343	↓	1RTM	137.28	80	78	141	555	141	10	3.8		
AVERAGE			325.8			5.77	78.1		141				4.5		

REMARKS: Pre-Leak Check: Post-Leak Check:

Condenser Temp = 140°F

Sampling Rate=3 lpm=0.1 ft^3/min

	ALIQUOT / VOLUME	TITRATION (ml)		lb/dscf	ppmv,act	ppmv,cor
PLUG--SO_3						
PROBE--SO_3						
CONDENSER--SO_3						
BLANK						
IMPINGER (H_2O_2)--SO_2						

Gas Vol, dscf

$BaCl_2$ NORMALITY

CONSOL ENERGY

O:\RdAppRes\STACK\datasheets\SO3SHEET
09/07/07

SO_3 FIELD SAMPLING DATA SHEET

PLANT	R. Paul Smith
LOCATION	ESP Inlet
DUCT DIMENSIONS	2 x (188" x 71.5")
DUCT AREA	2 x 91.35 = 186.69 ft2
DATE	9/12/07
TIME	Start- 1023 Stop- 1124
SAMPLE BOX	A
METER BOX	NuTech # N 4
PITOT TUBE DESC	NA
OPERATOR(S)	BWG & JEL

AMBIENT TEMP [°F]	70
BAROMETRIC PRESSURE [" Hg]	29.52
%H_2O (Assumed)	8
PROBE LENGTH [ft]	4
NOZZLE ID [inch]	XXXX
CALIBRATION FACTORS: delta H	XXXX
Y	.983
C(p)	NA
K	XXXX

WATER BATH SETTING	140
PROBE HTR SETTING	550
DUCT X-SECTION	circ ? rect ? other:
POSITION OF PORT A	

Page _____ of _____

DRY MOLECULAR WEIGHT (Assumed)	
WET MOLECULAR WEIGHT (Assumed)	

(Assumed=)

TRAVRSE POINT [inch]	SAMPLE TIME [minute]	STATIC PRESSURE [" H_2O]	STACK TEMP [°F]	~~PITOT HEAD~~ ΔH [" H_2O]	ROTOMETER SETTING	METER READING [ft^3]	METER TEMP [°F] inlet	METER TEMP [°F] outlet	CONDENSER TEMP [°F]	PROBE TEMP [°F]	WATER BATH TEMP [°F]	METER VACUUM [" Hg]	O_2 METER [%]	CONTROL ROOM O_2 [%]	CONTROL ROOM DUCT TEMP [—uo°F]
						138.296									
	0 - 10	NA	232	.02	1RTM	139.3	74	72	140	553	NA	10			
	10 - 20		261	.02	1RTM	140.3	74	72	140	552		10	3.9		
	20 - 30		258	.02	1RTM	141.3	75	73	140	556		10	3.9		
	30 - 40		205	.02	1RTM	142.3	76	74	140	554		10	5.8		
	40 - 50		205	.02	1RTM	143.3	77	74	140	551		10	4.2		
	50 - 60		200	.02	1RTM	144.331	77	75	140	549					
AVERAGE			226.8	0.02		6.035	74.4		140				4.5		

REMARKS Pre-Leak Check: Post-Leak Check:

Condenser Temp = 140°F

Sampling Rate=3 lpm=0.1 ft^3/min

	ALIQUOT / VOLUME	TITRATION (ml)		lb/dscf	ppmv,act	ppmv,cor
PLUG--SO_3						
PROBE--SO_3						
CONDENSER--SO_3						
BLANK						
IMPINGER (H_2O_2)--SO_2						

Gas Vol, dscf

$BaCl_2$ NORMALITY

CONSOL ENERGY

O:\RdAppRes\STACK\datasheets\SO3SHEET
09/07/07

SO_3 FIELD SAMPLING DATA SHEET

PLANT	R. Paul Smith
LOCATION	ESP Inlet
DUCT DIMENSIONS	2 x (188" x 71.5")
DUCT AREA	2 x 91.35 = 186.69 ft2
DATE	9/12/07
TIME	Start- Stop-
SAMPLE BOX	
METER BOX	NuTech # 4
PITOT TUBE DESC	NA
OPERATOR(S)	BWG

AMBIENT TEMP [°F]	70
BAROMETRIC PRESSURE [" Hg]	29.52
$\%H_2O$ (Assumed)	8
PROBE LENGTH [ft]	4
NOZZLE ID [inch]	XXXX
CALIBRATION FACTORS: delta H	XXXX
Y	.983
C(p)	NA
K	XXXX

WATER BATH SETTING	140		
PROBE HTR SETTING	550		
DUCT X-SECTION	circ ?	rect ?	other:
POSITION OF PORT A			

Page _____ of _____

DRY MOLECULAR WEIGHT (Assumed)	
WET MOLECULAR WEIGHT (Assumed)	

(Assumed=)

TRAVRSE POINT [inch]	SAMPLE TIME [minute]	STATIC PRESSURE [" H_2O]	STACK TEMP [°F]	~~PITOT HEAD~~ ΔH [" H_2O]	ROTOMETER SETTING	METER READING [ft^3]	METER TEMP [°F] inlet	METER TEMP [°F] outlet	CONDENSER TEMP [°F]	PROBE TEMP [°F]	WATER BATH TEMP [°F]	METER VACUUM [" Hg]	O_2 METER [%]	CONTROL ROOM O_2 [%]	CONTROL ROOM DUCT TEMP [—uo°F]
					≈70%	144.801									
Duct B	0 - 10	NA	251	.02	1 RTM	145.8	77	75	139	555	NA	10			
	10 - 20		246	.02	1 RTM	146.8	76	75	138	558		10	4.3		
	20 - 30		235	.02	1 RTM	147.8	74	74	141	551		10	4.1		
Duct A	30 - 40		272	.02	1 RTM	148.8	74	73	139	561		10	3.8		
	40 - 50		282	.02	1 RTM	149.8	75	74	139	565		11	3.8		
	50 - 60		288	.02	1 RTM	150.807	76	74	141	544		11	3.9		
AVERAGE			2623	.02		6.006	74.8		139.4				4.0		

REMARKS Pre-Leak Check: Post-Leak Check:

Condenser Temp = 140°F

Sampling Rate=3 lpm=0.1 ft^3/min

	ALIQUOT / VOLUME	TITRATION (ml)		lb/dscf	ppmv,act	ppmv,cor
PLUG–SO_3						
PROBE–SO_3						
CONDENSER–SO_3						
BLANK						
IMPINGER (H_2O_2)–SO_2						

Gas Vol, dscf

$BaCl_2$ NORMALITY

CONSOL ENERGY

O:\RdAppRes\STACK\datasheets\SO3SHEET
09/07/07

Duct A closest to elevator

ESP Inlet Preliminary Flows

		ΔP	Ts	
S-A-	1	~~.21~~	~~230~~	
	2	~~.30~~ 0.21	320	
	3			
	4	0.27		
S-B	1	~~.43~~		-5.7
	2		317	
	3	~~1.24~~		
	4	0.14		
		0.17		
S-C-	1			
	2			
	3	0.24		
	4	0.28		
				.515
N-A-	1			
	2	0.23 ~~0.15~~	330	
	3			
	4	0.16		
N-B-	1			
	2			
	3	0.15	300	-5.3
	4	0.19		
N-C	1			
	2	0.19		
	3			
	4	0.32		

ΔP = 0.21 317°F

STACK Preliminary Flows

Points
2½"
8"
14⅛"
21¼"
30"
42¾"

		ΔP	T_s	
A-	1	.931	277	
	2	1.32	277	
	3	1.47	277	-.640
	4	1.34	278	
	5	1.31	278	
	6	1.33	278	
B-	1	.962	278	
	2	~~.962 278~~ 1.33	279	
	3	1.47	280	
	4	1.42	280	-.665
	5	1.33	280	
	6	1.36	280	
C-	1	1.11	278	
	2	1.45	280	
	3	1.47	280	-.989
	4	1.39	280	
	5	1.20	280	
	6	1.43	280	
D-	1	.935	276	
	2	1.36	278	
	3	1.45	277	-.933
	4	1.38	277	
	5	1.25	278	-.807
	6	1.22	278	
Avg.	RMS	1.21	278.5	

K = 1.49, 1.62

DN = .214

7/32 A

~3

Y = 1.046

H = 1.859

Worksheet for Selecting Traverse Points for Circular Ducts

R. Paul Smith Stack

Point Location (%) Versus Number of Traverse Points

Point	4	6	8	10	12
1	6.7	4.4	3.2	2.6	2.1
2	25.0	14.6	10.5	8.2	6.7
3	75.0	29.6	19.4	14.6	11.8
4	93.3	70.4	32.3	22.6	17.7
5	--	85.4	67.7	34.2	25.0
6	--	95.6	80.6	65.8	35.6
7	--	--	89.5	77.4	64.4
8	--	--	96.8	85.4	75.0
9	--	--	--	91.8	82.3
10	--	--	--	97.4	88.2
11	--	--	--	--	93.3
12	--	--	--	--	97.9

Duct Diameter, ft	**10.00**	**120.00**	**Inches**
Cross-Section, ft—u3		**78.53**	**ft—u2**

Traverse Point Distance from Wall in Decimal Inches

Point	4	6	8	10	12
1	8.04	5.28	3.84	3.12	2.52
2	30.00	17.52	12.60	9.84	8.04
3	90.00	35.52	23.28	17.52	14.16
4	111.96	84.48	38.76	27.12	21.24
5		102.48	81.24	41.04	30.00
6		114.72	96.72	78.96	42.72
7			107.40	92.88	77.28
8			116.16	102.48	90.00
9				110.16	98.76
10				116.88	105.84
11					111.96
12					117.48

Traverse Point Distance from Wall in 1/8" Increments

Point	4	6	8	10	12
1	8 - 0/8	5 - 2/8	3 - 7/8	3 - 1/8	2 - 4/8
2	30 - 0/8	17 - 4/8	12 - 5/8	9 - 7/8	8 - 0/8
3	90 - 0/8	35 - 4/8	23 - 2/8	17 - 4/8	14 - 1/8
4	112 - 0/8	84 - 4/8	38 - 6/8	27 - 1/8	21 - 2/8
5		102 - 4/8	81 - 2/8	41 - 0/8	30 - 0/8
6		114 - 6/8	96 - 6/8	79 - 0/8	42 - 6/8
7			107 - 3/8	92 - 7/8	77 - 2/8
8			116 - 1/8	102 - 4/8	90 - 0/8
9				110 - 1/8	98 - 6/8
10				116 - 7/8	105 - 7/8
11					112 - 0/8
12					117 - 4/8

G:\RdAppRes\STACK\Amonate03\datasheets\Points.wk1 09/07/07

APPENDIX B

Analytical Data

CONSOL ENERGY

Research and Development
www.consolenergy.com
4000 Brownsville Rd.
South Park, PA 15129

Sample Description.: RPS COAL 9/11/07
Sample No.: COAL-1
Date Received: 09/19/2007
Date Completed: 10/19/2007

Analytical No.: 20075435
Project No.: 1621 -094 -000
Submitted By: JEL/BWG/ROS

Proximate (Dry)	Wt%
Ash	17.97
Volatile Matter	19.72
Fixed Carbon	62.31
BTU/lb	12242
MAF BTU/lb	14924

Ultimate (Dry)%	
Carbon	70.67
Hydrogen	4.55
Nitrogen	1.20
Chlorine	0.0438
Sulfur, Total	1.02
Ash	17.97
Oxygen (DIFF)	4.55

Major Ash Elem. (Ignited)	
SiO2	55.39
Al2O3	27.83
TiO2	1.34
Fe2O3	8.11
CaO	1.76
MgO	0.74
Na2O	0.28
K2O	2.73
P2O5	0.33
SO3	1.61
Undetermined	-0.12

Total Moisture

Sulfur Forms (Dry)	
Pyritic Sulfur	
Sulfate	
Organic	
Sulfur, Total	1.02

Ash Fusion Reducing Temp (F)
Initial
Softening
Hemispherical.
Fluid

Ash Fusion Oxidizing
Initial
Softening
Hemispherical.
Fluid

Misc.	
Analysis	Value

HGI/FSI
HGI
FSI

Trace Elements (ppm (Dry)	
Hg	0.198
F	
As	
Ba	
Be	
Cd	
Co	
Cr	
Cu	
Li	
Mn	
Mo	
Ni	
Pb	
Sb	
Se	
Sn	
Th	
Tl	
U	
V	
Zn	

Seive Analysis

SIZE	WT %

As Determined Moisture 1.82 %

These values have been reviewed and are approved for transmission.

CONSOL ENERGY

Research and Development
www.consolenergy.com
4000 Brownsville Rd.
South Park, PA 15129

Sample Description.: ASH 9/11/07
Sample No.: ASH-1
Date Received: 09/19/2007
Date Completed: 10/19/2007

Analytical No.: 20075436
Project No.: 1621 -094 -000
Submitted By: JEL/BWG/ROS

Proximate (Dry)	Wt%
Ash	61.51
Volatile Matter	1.44
Fixed Carbon	37.05
BTU/lb	
MAF BTU/lb	

Ultimate (Dry)%	
Carbon	37.07
Hydrogen	
Nitrogen	
Chlorine	0.0140
Sulfur, Total	0.07
Ash	61.51
Oxygen (DIFF)	

Major Ash Elem. (Dry)	
SiO_2	31.93
Al_2O_3	18.90
TiO_2	0.95
Fe_2O_3	6.74
CaO	1.09
MgO	0.49
Na_2O	0.17
K_2O	1.65
P_2O_5	0.33
SO_3	0.24
Undetermined	37.51

Total Moisture

Sulfur Forms (Dry)	
Pyritic Sulfur	
Sulfate	
Organic	
Sulfur, Total	0.07

Ash Fusion Reducing Temp (F)
Initial
Softening
Hemispherical.
Fluid

Ash Fusion Oxidizing
Initial
Softening
Hemispherical.
Fluid

Misc.	
Analysis	Value

HGI/FSI
HGI
FSI

Trace Elements (ppm (Dry)	
Hg	1.141
F	
As	
Ba	
Be	
Cd	
Co	
Cr	
Cu	
Li	
Mn	
Mo	
Ni	
Pb	
Sb	
Se	
Sn	
Th	
Tl	
U	
V	
Zn	

Seive Analysis	
SIZE	WT %

As Determined Moisture 0.11 %

These values have been reviewed and are approved for transmission. JWT

CONSOL ENERGY

Research and Development
www.consolenergy.com
4000 Brownsville Rd.
South Park, PA 15129

Sample Description.: **MILL REJECTS 9/11/07**
Sample No.: REJECTS-1
Date Received: 09/19/2007
Date Completed: 10/19/2007

Analytical No.: **20075437**
Project No.: 1621 -094 -000
Submitted By: JEL/BWG/ROS

Proximate (Dry)	Wt%
Ash	78.40
Volatile Matter	20.26
Fixed Carbon	1.34
BTU/lb	
MAF BTU/lb	

Ultimate (Dry)%	
Carbon	7.64
Hydrogen	
Nitrogen	
Chlorine	0.0050
Sulfur, Total	6.05
Ash	78.40
Oxygen (DIFF)	

Major Ash Elem. (Ignited)	
SiO2	45.30
Al2O3	11.01
TiO2	0.57
Fe2O3	17.87
CaO	16.81
MgO	1.98
Na2O	0.13
K2O	1.44
P2O5	0.16
SO3	4.90
Undetermined	-0.17

Total Moisture

Sulfur Forms (Dry)	
Pyritic Sulfur	
Sulfate	
Organic	
Sulfur, Total	6.05

Ash Fusion Reducing Temp (F)
Initial
Softening
Hemispherical.
Fluid

Ash Fusion Oxidizing
Initial
Softening
Hemispherical.
Fluid

Misc.	
Analysis	Value

HGI/FSI
HGI
FSI

Trace Elements (ppm (Dry)	
Hg	1.117
F	
As	
Ba	
Be	
Cd	
Co	
Cr	
Cu	
Li	
Mn	
Mo	
Ni	
Pb	
Sb	
Se	
Sn	
Th	
Tl	
U	
V	
Zn	

Seive Analysis

SIZE	WT %

As Determined Moisture 0.34 %

These values have been reviewed and are approved for transmission.

CONSOL ENERGY

Research and Development
www.consolenergy.com
4000 Brownsville Rd.
South Park, PA 15129

Sample Description.: RPS COAL 9/11/07
Sample No.: COAL-2
Date Received: 09/19/2007
Date Completed: 10/19/2007

Analytical No.: 20075438
Project No.: 1621 -094 -000
Submitted By: JEL/BWG/ROS

Proximate (Dry)	Wt%
Ash	18.33
Volatile Matter	19.40
Fixed Carbon	62.27
BTU/lb	12275
MAF BTU/lb	15030

Ultimate (Dry)%	
Carbon	70.47
Hydrogen	4.13
Nitrogen	1.31
Chlorine	0.0428
Sulfur, Total	1.04
Ash	18.33
Oxygen (DIFF)	4.68

Major Ash Elem. (Ignited)	
SiO2	53.40
Al2O3	29.28
TiO2	1.70
Fe2O3	7.56
CaO	1.63
MgO	0.78
Na2O	0.24
K2O	2.50
P2O5	0.30
SO3	1.64
Undetermined	0.97

Total Moisture

Sulfur Forms (Dry)	
Pyritic Sulfur	
Sulfate	
Organic	
Sulfur, Total	1.04

Ash Fusion Reducing Temp (F)	
Initial	
Softening	
Hemispherical.	
Fluid	

Ash Fusion Oxidizing	
Initial	
Softening	
Hemispherical.	
Fluid	

Misc.	
Analysis	Value

HGI/FSI	
HGI	
FSI	

Trace Elements (ppm (Dry)	
Hg	0.176
F	
As	
Ba	
Be	
Cd	
Co	
Cr	
Cu	
Li	
Mn	
Mo	
Ni	
Pb	
Sb	
Se	
Sn	
Th	
Tl	
U	
V	
Zn	

Seive Analysis

SIZE	WT %

As Determined Moisture 1.97 %

These values have been reviewed and are approved for transmission.

CONSOL ENERGY

Research and Development
www.consolenergy.com
4000 Brownsville Rd.
South Park, PA 15129

Sample Description.: ASH 9/11/07
Sample No.: ASH-2
Date Received: 09/19/2007
Date Completed: 10/19/2007

Analytical No.: 20075439
Project No.: 1621 -094 -000
Submitted By: JEL/BWG/ROS

Proximate (Dry)	Wt%
Ash	59.97
Volatile Matter	2.20
Fixed Carbon	37.83
BTU/lb	
MAF BTU/lb	

Ultimate (Dry)%	
Carbon	38.48
Hydrogen	
Nitrogen	
Chlorine	0.0120
Sulfur, Total	0.09
Ash	59.97
Oxygen (DIFF)	

Major Ash Elem. (Dry)	
SiO2	30.32
Al2O3	18.49
TiO2	0.99
Fe2O3	6.37
CaO	1.05
MgO	0.47
Na2O	0.14
K2O	1.55
P2O5	0.31
SO3	0.23
Undetermined	40.08

Total Moisture

Sulfur Forms (Dry)	
Pyritic Sulfur	
Sulfate	
Organic	
Sulfur, Total	0.09

Ash Fusion Reducing Temp (F)
Initial
Softening
Hemispherical.
Fluid

Ash Fusion Oxidizing
Initial
Softening
Hemispherical.
Fluid

Misc.
Analysis Value

HGI/FSI
HGI
FSI

Trace Elements (ppm (Dry)	
Hg	1.713
F	
As	
Ba	
Be	
Cd	
Co	
Cr	
Cu	
Li	
Mn	
Mo	
Ni	
Pb	
Sb	
Se	
Sn	
Th	
Tl	
U	
V	
Zn	

Seive Analysis

SIZE	WT %

As Determined Moisture 0.07 %

These values have been reviewed and are approved for transmission. JMF

CONSOL ENERGY

Research and Development
www.consolenergy.com
4000 Brownsville Rd.
South Park, PA 15129

Sample Description.: **MILL REJECTS 9/11/07**
Sample No.: REJECTS-2
Date Received: 09/19/2007
Date Completed: 10/19/2007

Analytical No.: **20075440**
Project No.: 1621 -094 -000
Submitted By: JEL/BWG/ROS

Proximate (Dry)	Wt%
Ash	77.09
Volatile Matter	25.66
Fixed Carbon	-2.75
BTU/lb	
MAF BTU/lb	

Ultimate (Dry)%	
Carbon	6.86
Hydrogen	
Nitrogen	
Chlorine	0.0040
Sulfur, Total	5.83
Ash	77.09
Oxygen (DIFF)	

Major Ash Elem. (Ignited)	
SiO2	40.88
Al2O3	9.40
TiO2	0.46
Fe2O3	15.98
CaO	26.27
MgO	2.35
Na2O	0.11
K2O	1.37
P2O5	0.16
SO3	4.24
Undetermined	-1.22

Total Moisture

Sulfur Forms (Dry)	
Pyritic Sulfur	
Sulfate	
Organic	
Sulfur, Total	5.83

Ash Fusion Reducing Temp (F)
Initial
Softening
Hemispherical.
Fluid

Ash Fusion Oxidizing
Initial
Softening
Hemispherical.
Fluid

Misc.	
Analysis	Value

HGI/FSI
HGI
FSI

Trace Elements (ppm (Dry)	
Hg	0.839
F	
As	
Ba	
Be	
Cd	
Co	
Cr	
Cu	
Li	
Mn	
Mo	
Ni	
Pb	
Sb	
Se	
Sn	
Th	
Tl	
U	
V	
Zn	

Seive Analysis

SIZE	WT %

As Determined Moisture 0.27 %

These values have been reviewed and are approved for transmission. JMF

CONSOL ENERGY

Research and Development
www.consolenergy.com
4000 Brownsville Rd.
South Park, PA 15129

Sample Description.: RPS COAL 9/12/07
Sample No.: COAL-3
Date Received: 09/19/2007
Date Completed: 10/19/2007

Analytical No.: 20075441
Project No.: 1621 -094 -000
Submitted By: JEL/BWG/ROS

Proximate (Dry)	Wt%
Ash	18.70
Volatile Matter	18.76
Fixed Carbon	62.54
BTU/lb	12285
MAF BTU/lb	15111

Ultimate (Dry)%	
Carbon	70.76
Hydrogen	4.45
Nitrogen	1.07
Chlorine	0.0499
Sulfur, Total	1.02
Ash	18.70
Oxygen (DIFF)	3.95

Major Ash Elem. (Ignited)	
SiO2	53.73
Al2O3	27.12
TiO2	1.32
Fe2O3	8.27
CaO	2.46
MgO	0.96
Na2O	0.24
K2O	2.62
P2O5	0.31
SO3	2.32
Undetermined	0.65

Total Moisture

Sulfur Forms (Dry)	
Pyritic Sulfur	
Sulfate	
Organic	
Sulfur, Total	1.02

Ash Fusion Reducing Temp (F)
Initial
Softening
Hemispherical.
Fluid

Ash Fusion Oxidizing
Initial
Softening
Hemispherical.
Fluid

Misc.
Analysis Value

HGI/FSI
HGI
FSI

Trace Elements (ppm (Dry)	
Hg	0.201
F	
As	
Ba	
Be	
Cd	
Co	
Cr	
Cu	
Li	
Mn	
Mo	
Ni	
Pb	
Sb	
Se	
Sn	
Th	
Tl	
U	
V	
Zn	

Seive Analysis

SIZE	WT %

As Determined Moisture 1.71 %

These values have been reviewed and are approved for transmission. JMJ

CONSOL ENERGY

Research and Development
www.consolenergy.com
4000 Brownsville Rd.
South Park, PA 15129

Sample Description.: ASH 9/12/07
Sample No.: ASH-3
Date Received: 09/19/2007
Date Completed: 10/19/2007

Analytical No.: 20075442
Project No.: 1621 -094 -000
Submitted By: JEL/BWG/ROS

Proximate (Dry)	Wt%
Ash	59.53
Volatile Matter	2.61
Fixed Carbon	37.86
BTU/lb	
MAF BTU/lb	

Ultimate (Dry)%	
Carbon	49.77
Hydrogen	
Nitrogen	
Chlorine	0.0211
Sulfur, Total	0.12
Ash	59.53
Oxygen (DIFF)	

Major Ash Elem. (Dry)	
SiO_2	31.97
Al_2O_3	18.67
TiO_2	0.99
Fe_2O_3	5.78
CaO	0.72
MgO	0.41
Na_2O	0.13
K_2O	1.46
P_2O_5	0.26
SO_3	0.31
Undetermined	39.30

Total Moisture

Sulfur Forms (Dry)	
Pyritic Sulfur	
Sulfate	
Organic	
Sulfur, Total	0.12

Ash Fusion Reducing Temp (F)
Initial
Softening
Hemispherical.
Fluid

Ash Fusion Oxidizing
Initial
Softening
Hemispherical.
Fluid

Misc.
Analysis Value

HGI/FSI
HGI
FSI

Trace Elements (ppm (Dry)	
Hg	2.527
F	
As	
Ba	
Be	
Cd	
Co	
Cr	
Cu	
Li	
Mn	
Mo	
Ni	
Pb	
Sb	
Se	
Sn	
Th	
Tl	
U	
V	
Zn	

Seive Analysis	
SIZE	WT %

As Determined Moisture 10.01 %

These values have been reviewed and are approved for transmission.

CONSOL ENERGY

Research and Development
www.consolenergy.com
4000 Brownsville Rd.
South Park, PA 15129

Sample Description.: **MILL REJECTS 9/12/07**
Sample No.: REJECTS-3
Date Received: 09/19/2007
Date Completed: 10/19/2007

Analytical No.: **20075443**
Project No.: 1621 -094 -000
Submitted By: JEL/BWG/ROS

Proximate (Dry)	Wt%
Ash	78.93
Volatile Matter	22.01
Fixed Carbon	-0.94
BTU/lb	
MAF BTU/lb	

Ultimate (Dry)%	
Carbon	6.54
Hydrogen	
Nitrogen	
Chlorine	0.0040
Sulfur, Total	5.89
Ash	78.93
Oxygen (DIFF)	

Major Ash Elem. (Ignited)	
SiO2	42.95
Al2O3	11.93
TiO2	0.53
Fe2O3	15.12
CaO	20.44
MgO	2.20
Na2O	0.26
K2O	1.68
P2O5	0.08
SO3	4.40
Undetermined	0.41

Total Moisture

Sulfur Forms (Dry)	
Pyritic Sulfur	
Sulfate	
Organic	
Sulfur, Total	5.89

Ash Fusion Reducing Temp (F)
Initial
Softening
Hemispherical,
Fluid

Ash Fusion Oxidizing
Initial
Softening
Hemispherical,
Fluid

Misc.	
Analysis	Value

HGI/FSI
HGI
FSI

Trace Elements (ppm (Dry)	
Hg	1.084
F	
As	
Ba	
Be	
Cd	
Co	
Cr	
Cu	
Li	
Mn	
Mo	
Ni	
Pb	
Sb	
Se	
Sn	
Th	
Tl	
U	
V	
Zn	

Seive Analysis	
SIZE	WT %

As Determined Moisture 0.33 %

These values have been reviewed and are approved for transmission.

CONSOL ENERGY

Research and Development
www.consolenergy.com
4000 Brownsville Rd.
South Park, PA 15129

Sample Description.: **RPS COAL 9/12/07**
Sample No.: COAL-4
Date Received: 09/19/2007
Date Completed: 10/20/2007

Analytical No.: **20075444**
Project No.: 1621 -094 -000
Submitted By: JEL/BWG/ROS

Proximate (Dry)	Wt%
Ash	17.08
Volatile Matter	18.83
Fixed Carbon	64.09
BTU/lb	12441
MAF BTU/lb	15004

Ultimate (Dry)%	
Carbon	71.65
Hydrogen	4.11
Nitrogen	1.12
Chlorine	0.0527
Sulfur, Total	0.98
Ash	17.08
Oxygen (DIFF)	5.01

Major Ash Elem. (Ignited)	
SiO2	57.02
Al2O3	30.03
TiO2	1.56
Fe2O3	6.33
CaO	1.05
MgO	0.65
Na2O	0.23
K2O	2.63
P2O5	0.25
SO3	0.99
Undetermined	-0.74

Total Moisture

Sulfur Forms (Dry)	
Pyritic Sulfur	
Sulfate	
Organic	
Sulfur, Total	0.98

Ash Fusion Reducing Temp (F)
Initial
Softening
Hemispherical.
Fluid

Ash Fusion Oxidizing
Initial
Softening
Hemispherical.
Fluid

Misc.
Analysis Value

HGI/FSI
HGI
FSI

Trace Elements (ppm (Dry)	
Hg	0.158
F	
As	
Ba	
Be	
Cd	
Co	
Cr	
Cu	
Li	
Mn	
Mo	
Ni	
Pb	
Sb	
Se	
Sn	
Th	
Tl	
U	
V	
Zn	

Seive Analysis

SIZE	WT %

As Determined Moisture 1.36 %

These values have been reviewed and are approved for transmission.

CONSOL ENERGY

Research and Development
www.consolenergy.com
4000 Brownsville Rd.
South Park, PA 15129

Sample Description.: **ASH 9/12/07**
Sample No.: ASH-4
Date Received: 09/19/2007
Date Completed: 10/20/2007

Analytical No.: **20075445**
Project No.: 1621 -094 -000
Submitted By: JEL/BWG/ROS

Proximate (Dry)	Wt%
Ash	82.97
Volatile Matter	2.58
Fixed Carbon	14.45
BTU/lb	484
MAF BTU/lb	2842

Ultimate (Dry)%	
Carbon	15.10
Hydrogen	1.65
Nitrogen	0.02
Chlorine	0.0070
Sulfur, Total	0.07
Ash	82.97
Oxygen (DIFF)	0.18

Major Ash Elem. (AsDet)	
SiO2	47.65
Al2O3	25.60
TiO2	1.44
Fe2O3	5.56
CaO	1.20
MgO	0.60
Na2O	0.22
K2O	2.23
P2O5	0.29
SO3	0.17
Undetermined	15.04

Total Moisture

Sulfur Forms (Dry)	
Pyritic Sulfur	
Sulfate	
Organic	
Sulfur, Total	0.07

Ash Fusion Reducing Temp (F)
Initial
Softening
Hemispherical.
Fluid

Ash Fusion Oxidizing
Initial
Softening
Hemispherical.
Fluid

Misc.
Analysis Value

HGI/FSI
HGI
FSI

Trace Elements (ppm (Dry)	
Hg	1.074
F	
As	
Ba	
Be	
Cd	
Co	
Cr	
Cu	
Li	
Mn	
Mo	
Ni	
Pb	
Sb	
Se	
Sn	
Th	
Tl	
U	
V	
Zn	

Seive Analysis

SIZE	WT %

As Determined Moisture 0 %

These values have been reviewed and are approved for transmission.

CONSOLENERGY

Research and Development
www.consolenergy.com
4000 Brownsville Rd.
South Park, PA 15129

Sample Description.: **MILL REJECTS 9/12/07**
Sample No.: REJECTS-4
Date Received: 09/19/2007
Date Completed: 10/20/2007

Analytical No.: **20075446**
Project No.: 1621 -094 -000
Submitted By: JEL/BWG/ROS

Proximate (Dry)	Wt%
Ash	80.00
Volatile Matter	15.98
Fixed Carbon	4.02
BTU/lb	
MAF BTU/lb	

Ultimate (Dry)%	
Carbon	7.24
Hydrogen	
Nitrogen	
Chlorine	0.0060
Sulfur, Total	5.49
Ash	80.00
Oxygen (DIFF)	

Major Ash Elem. (Ignited)	
SiO2	50.98
Al2O3	16.70
TiO2	0.90
Fe2O3	15.25
CaO	9.65
MgO	1.62
Na2O	0.29
K2O	2.19
P2O5	0.09
SO3	2.11
Undetermined	0.22

Total Moisture

Sulfur Forms (Dry)	
Pyritic Sulfur	
Sulfate	
Organic	
Sulfur, Total	5.49

Ash Fusion Reducing Temp (F)
Initial
Softening
Hemispherical.
Fluid

Ash Fusion Oxidizing
Initial
Softening
Hemispherical.
Fluid

Misc.	
Analysis	Value

HGI/FSI
HGI
FSI

Trace Elements (ppm (Dry)	
Hg	0.943
F	
As	
Ba	
Be	
Cd	
Co	
Cr	
Cu	
Li	
Mn	
Mo	
Ni	
Pb	
Sb	
Se	
Sn	
Th	
Tl	
U	
V	
Zn	

Seive Analysis	
SIZE	WT %

As Determined Moisture 0.46 %

These values have been reviewed and are approved for transmission.

CONSOL ENERGY

Research and Development
www.consolenergy.com
4000 Brownsville Rd.
South Park, PA 15129

Sample Description.: ASH 9/11/07
Sample No.: ASH-1
Date Received: 09/19/2007
Date Completed: 10/19/2007

Analytical No.: 20075436
Project No.: 1621 -094 -000
Submitted By: JEL/BWG/ROS

Proximate (Dry)	Wt%
Ash	61.88
Volatile Matter	1.44
Fixed Carbon	36.68
BTU/lb	
MAF BTU/lb	

Ultimate (Dry)%	
Carbon	36.39
Hydrogen	1.47
Nitrogen	
Chlorine	0.0125
Sulfur, Total	0.20
Ash	61.88
Oxygen (DIFF)	

Major Ash Elem. (Dry)	
SiO2	31.93
Al2O3	18.91
TiO2	0.95
Fe2O3	6.74
CaO	1.09
MgO	0.49
Na2O	0.17
K2O	1.65
P2O5	0.33
SO3	0.24
Undetermined	37.50

Total Moisture

Sulfur Forms (Dry)	
Pyritic Sulfur	
Sulfate	
Organic	
Sulfur, Total	0.20

Ash Fusion Reducing Temp (F)
Initial
Softening
Hemispherical.
Fluid

Ash Fusion Oxidizing
Initial
Softening
Hemispherical.
Fluid

Misc.	
Analysis	Value

HGI/FSI
HGI
FSI

Trace Elements (ppm (Dry)	
Hg	1.158
F	
As	
Ba	
Be	
Cd	
Co	
Cr	
Cu	
Li	
Mn	
Mo	
Ni	
Pb	
Sb	
Se	
Sn	
Th	
Tl	
U	
V	
Zn	

Seive Analysis	
SIZE	WT %

As Determined Moisture 0.135 %

These values have been reviewed and are approved for transmission.

CONSOL ENERGY

Research and Development
www.consolenergy.com
4000 Brownsville Rd.
South Park, PA 15129

Sample Description.: **ASH 9/11/07**
Sample No.: ASH-2
Date Received: 09/19/2007
Date Completed: 10/19/2007

Analytical No.: **20075439**
Project No.: 1621 -094 -000
Submitted By: JEL/BWG/ROS

Proximate (Dry)	Wt%
Ash	60.27
Volatile Matter	2.20
Fixed Carbon	37.53
BTU/lb	
MAF BTU/lb	

Ultimate (Dry)%	
Carbon	38.56
Hydrogen	1.64
Nitrogen	
Chlorine	0.0100
Sulfur, Total	0.21
Ash	60.27
Oxygen (DIFF)	

Major Ash Elem. (Dry)	
SiO2	30.32
Al2O3	18.49
TiO2	0.99
Fe2O3	6.38
CaO	1.05
MgO	0.47
Na2O	0.14
K2O	1.55
P2O5	0.31
SO3	0.23
Undetermined	40.07

Total Moisture

Sulfur Forms (Dry)	
Pyritic Sulfur	
Sulfate	
Organic	
Sulfur, Total	0.21

Ash Fusion Reducing Temp (F)
Initial
Softening
Hemispherical.
Fluid

Ash Fusion Oxidizing
Initial
Softening
Hemispherical.
Fluid

Misc.
Analysis Value

HGI/FSI
HGI
FSI

Trace Elements (ppm (Dry)	
Hg	1.756
F	
As	
Ba	
Be	
Cd	
Co	
Cr	
Cu	
Li	
Mn	
Mo	
Ni	
Pb	
Sb	
Se	
Sn	
Th	
Tl	
U	
V	
Zn	

Seive Analysis

SIZE	WT %

As Determined Moisture 0.08 %

These values have been reviewed and are approved for transmission.

CONSOL ENERGY

Research and Development
www.consolenergy.com
4000 Brownsville Rd.
South Park, PA 15129

Sample Description.: **ASH 9/12/07**
Sample No.: ASH-3
Date Received: 09/19/2007
Date Completed: 10/19/2007

Analytical No.: **20075442**
Project No.: 1621 -094 -000
Submitted By: JEL/BWG/ROS

Proximate (Dry)	Wt%
Ash	53.76
Volatile Matter	2.35
Fixed Carbon	43.89
BTU/lb	
MAF BTU/lb	

Ultimate (Dry)%	
Carbon	42.49
Hydrogen	0.63
Nitrogen	
Chlorine	0.0180
Sulfur, Total	0.37
Ash	53.76
Oxygen (DIFF)	

Major Ash Elem. (Dry)	
SiO_2	28.80
Al_2O_3	16.82
TiO_2	0.89
Fe_2O_3	5.21
CaO	0.65
MgO	0.37
Na_2O	0.12
K_2O	1.31
P_2O_5	0.23
SO_3	0.28
Undetermined	45.32

Total Moisture

Sulfur Forms (Dry)	
Pyritic Sulfur	
Sulfate	
Organic	
Sulfur, Total	0.37

Ash Fusion Reducing Temp (F)
Initial
Softening
Hemispherical.
Fluid

Ash Fusion Oxidizing
Initial
Softening
Hemispherical.
Fluid

Misc.	
Analysis	Value

HGI/FSI
HGI
FSI

Trace Elements (ppm (Dry)	
Hg	2.241
F	
As	
Ba	
Be	
Cd	
Co	
Cr	
Cu	
Li	
Mn	
Mo	
Ni	
Pb	
Sb	
Se	
Sn	
Th	
Tl	
U	
V	
Zn	

Seive Analysis

SIZE	WT %

As Determined Moisture 0.115 %

These values have been reviewed and are approved for transmission.

CONSOL ENERGY

Research and Development
www.consolenergy.com
4000 Brownsville Rd.
South Park, PA 15129

Sample Description.: ASH 9/12/07
Sample No.: ASH-4
Date Received: 09/19/2007
Date Completed: 10/20/2007

Analytical No.: 20075445
Project No.: 1621 -094 -000
Submitted By: JEL/BWG/ROS

Proximate (Dry)	Wt%
Ash	83.19
Volatile Matter	2.58
Fixed Carbon	14.23
BTU/lb	484
MAF BTU/lb	2879

Ultimate (Dry)%	
Carbon	16.15
Hydrogen	1.64
Nitrogen	0.02
Chlorine	0.0050
Sulfur, Total	0.16
Ash	83.19
Oxygen (DIFF)	-1.17

Major Ash Elem. (Dry)	
SiO2	47.68
Al2O3	25.61
TiO2	1.44
Fe2O3	5.56
CaO	1.20
MgO	0.60
Na2O	0.22
K2O	2.23
P2O5	0.29
SO3	0.17
Undetermined	15.00

Total Moisture

Sulfur Forms (Dry)	
Pyritic Sulfur	
Sulfate	
Organic	
Sulfur, Total	0.16

Ash Fusion Reducing Temp (F)
Initial
Softening
Hemispherical
Fluid

Ash Fusion Oxidizing
Initial
Softening
Hemispherical
Fluid

Misc.	
Analysis	Value

HGI/FSI
HGI
FSI

Trace Elements (ppm (Dry)	
Hg	1.110
F	
As	
Ba	
Be	
Cd	
Co	
Cr	
Cu	
Li	
Mn	
Mo	
Ni	
Pb	
Sb	
Se	
Sn	
Th	
Tl	
U	
V	
Zn	

Seive Analysis

SIZE	WT %

As Determined Moisture 0.055 %

These values have been reviewed and are approved for transmission.

CONSOL ENERGY

R.Paul Smith
Project # 1650-92
Date 10/1/2007

Lab No.	Description	Sample		Hg ave(µg/L)	Impinger Volume (L)	Hg (µg)
20075370	PROBE & FILTER RINSE	2	STACK BL TEST 1 BS/PR	< 1.40	0.133	< 0.186
20075371	HEATED LINE RINSE	3	STACK BL TEST 1 BS/PR	1.43	0.180	0.257
20075372	KCL IMPINGER	4	STACK BL TEST 1 BS/PR	4.20	0.574	2.411
20075373	HNO3/H2O2 IMPINGER	5	STACK BL TEST 1 BS/PR	< 1.40	0.175	< 0.245
20075374	KMNO4 IMPINGER	6	STACK BL TEST 1 BS/PR	0.40	0.246	0.098
20075375	KMNO4 ACID RINSE	7	STACK BL TEST 1 BS/PR	< 1.40	0.100	< 0.140
20075376	PROBE & FILTER RINSE	9	STACK BL TEST 2 BS/PR	< 1.40	0.170	< 0.238
20075377	HEATED LINE RINSE	10	STACK BL TEST 2 BS/PR	< 1.40	0.150	< 0.210
20075378	KCL IMPINGER	11	STACK BL TEST 2 BS/PR	3.34	0.576	1.924
20075379	HNO3/H2O2 IMPINGER	12	STACK BL TEST 2 BS/PR	< 1.40	0.177	< 0.248
20075380	KMNO4 IMPINGER	13	STACK BL TEST 2 BS/PR	1.04	0.244	0.254
20075381	KMNO4 ACID RINSE	14	STACK BL TEST 2 BS/PR	< 1.40	0.100	< 0.140
20075382	PROBE & FILTER RINSE	20	ESP INLET ESP TEST 1 JL/BG	< 1.40	0.086	< 0.120
20075383	HEATED LINE RINSE	21	ESP INLET ESP TEST 1 JL/BG	< 1.40	0.112	< 0.157
20075384	KCL IMPINGER	16	ESP INLET ESP TEST 1 JL/BG	0.74	0.528	0.391
20075385	HNO3/H2O2 IMPINGER	17	ESP INLET ESP TEST 1 JL/BG	< 1.40	0.175	< 0.245
20075386	KMNO4 IMPINGER	18	ESP INLET ESP TEST 1 JL/BG	0.63	0.244	0.154
20075387	KMNO4 ACID RINSE	19	ESP INLET ESP TEST 1 JL/BG	< 1.40	0.100	< 0.140
20075388	PROBE & FILTER RINSE	23	STACK BL TEST 3 BS/PR	< 1.40	0.192	< 0.269
20075389	HEATED LINE RINSE	24	STACK BL TEST 3 BS/PR	< 1.40	0.150	< 0.210
20075390	KCL IMPINGER	25	STACK BL TEST 3 BS/PR	1.26	0.565	0.712
20075391	HNO3/H2O2 IMPINGER	26	STACK BL TEST 3 BS/PR	< 1.40	0.178	< 0.249
20075392	KMNO4 IMPINGER	27	STACK BL TEST 3 BS/PR	0.30	0.244	0.073
20075393	KMNO4 ACID RINSE	28	STACK BL TEST 3 BS/PR	< 1.40	0.100	< 0.140
20075394	PROBE & FILTER RINSE	30	STACK BL TEST 4 BS/PR	< 1.40	0.240	< 0.336
20075395	HEATED LINE RINSE	31	STACK BL TEST 4 BS/PR	< 1.40	0.162	< 0.227
20075396	KCL IMPINGER	32	STACK BL TEST 4 BS/PR	1.57	0.559	0.878
20075397	HNO3/H2O2 IMPINGER	33	STACK BL TEST 4 BS/PR	< 1.40	0.177	< 0.248
20075398	KMNO4 IMPINGER	34	STACK BL TEST 4 BS/PR	0.38	0.252	0.096
20075399	KMNO4 ACID RINSE	35	STACK BL TEST 4 BS/PR	< 1.40	0.100	< 0.140
20075400	KCL IMPINGER	38	STACK BL BLANK	< 0.28	0.450	< 0.126
20075401	HNO3/H2O2 IMPINGER	39	STACK BL BLANK	< 1.40	0.175	< 0.245
20075402	KMNO4 IMPINGER	40	STACK BL BLANK	< 0.28	0.250	< 0.07
20075403	KMNO4 ACID RINSE	41	STACK BL BLANK	< 1.40	0.100	< 0.140
20075404	ZENO H2O BLANK	42		< 0.28		
20075405	KCL BLANK	43		< 0.28		
20075406	HNO3/HCL BLANK	44		< 1.40		
20075407	HNO3/H2O2 BLANK	45		< 1.40		
20075408	KMNO4 BLANK	46		< 0.28		
20075409	KMNO4 BLANK	47		< 0.28		

ANALNUM	DESCR			Hg (ug/filter)	Filter	Hg (µg)
	RPS Blank Filter			< 0.007	1	< 0.007
	BL-1 Filter			0.111	1	0.111
	BL-2 Filter			0.026	1	0.026
	BL-3 Filter			< 0.007	1	< 0.007
	BL-4 Filter			0.025	1	0.025
	Filter 1070			1.158	1	1.158
	Filter 1069			1.165	1	1.165
	Filter 470101			0.103	1	0.103
	Filter 470102			0.126	1	0.126
	Filter 470103			0.202	1	0.202
	Filter 470104			0.109	1	0.109
	Filter 470105			0.111	1	0.111
	Filter 470106			0.098	1	0.098
	Filter 470107			0.06	1	0.060

CONSOL ENERGY

Mercury Duplicate Analyses RPD (Limit of 10%)...Impingers, Rinses, Blanks

Lab No.	Description	Sample		Hg (µg/L)	Hg (µg/L)	Hg ave(µg/L)	RPD, %
20075370	PROBE & FILTER RINSE	2	STACK BL TEST 1 BS/PR	< 1.40	< 1.40	< 1.40	0.0%
20075371	HEATED LINE RINSE	3	STACK BL TEST 1 BS/PR	1.44	1.41	1.43	2.1%
20075372	KCL IMPINGER	4	STACK BL TEST 1 BS/PR	4.14	4.25	4.20	2.6%
20075373	HNO3/H2O2 IMPINGER	5	STACK BL TEST 1 BS/PR	< 1.40	< 1.40	< 1.40	0.0%
20075374	KMNO4 IMPINGER	6	STACK BL TEST 1 BS/PR	0.37	0.42	0.40	12.7%
20075375	KMNO4 ACID RINSE	7	STACK BL TEST 1 BS/PR	< 1.40	< 1.40	< 1.40	0.0%
20075376	PROBE & FILTER RINSE	9	STACK BL TEST 2 BS/PR	< 1.40	< 1.40	< 1.40	0.0%
20075377	HEATED LINE RINSE	10	STACK BL TEST 2 BS/PR	< 1.40	< 1.40	< 1.40	0.0%
20075378	KCL IMPINGER	11	STACK BL TEST 2 BS/PR	3.33	3.34	3.34	0.3%
20075379	HNO3/H2O2 IMPINGER	12	STACK BL TEST 2 BS/PR	< 1.40	< 1.40	< 1.40	0.0%
20075380	KMNO4 IMPINGER	13	STACK BL TEST 2 BS/PR	1.02	1.06	1.04	3.8%
20075381	KMNO4 ACID RINSE	14	STACK BL TEST 2 BS/PR	< 1.40	< 1.40	< 1.40	0.0%
20075382	PROBE & FILTER RINSE	20	ESP INLET ESP TEST 1 JL/BG	< 1.40	< 1.40	< 1.40	0.0%
20075383	HEATED LINE RINSE	21	ESP INLET ESP TEST 1 JL/BG	< 1.40	< 1.40	< 1.40	0.0%
20075384	KCL IMPINGER	16	ESP INLET ESP TEST 1 JL/BG	0.73	0.75	0.74	2.7%
20075385	HNO3/H2O2 IMPINGER	17	ESP INLET ESP TEST 1 JL/BG	< 1.40	< 1.40	< 1.40	0.0%
20075386	KMNO4 IMPINGER	18	ESP INLET ESP TEST 1 JL/BG	0.63	0.63	0.63	0.0%
20075387	KMNO4 ACID RINSE	19	ESP INLET ESP TEST 1 JL/BG	< 1.40	< 1.40	< 1.40	0.0%
20075388	PROBE & FILTER RINSE	23	STACK BL TEST 3 BS/PR	< 1.40	< 1.40	< 1.40	0.0%
20075389	HEATED LINE RINSE	24	STACK BL TEST 3 BS/PR	< 1.40	< 1.40	< 1.40	0.0%
20075390	KCL IMPINGER	25	STACK BL TEST 3 BS/PR	1.23	1.29	1.26	4.8%
20075391	HNO3/H2O2 IMPINGER	26	STACK BL TEST 3 BS/PR	< 1.40	< 1.40	< 1.40	0.0%
20075392	KMNO4 IMPINGER	27	STACK BL TEST 3 BS/PR	0.3	0.29	0.30	3.4%
20075393	KMNO4 ACID RINSE	28	STACK BL TEST 3 BS/PR	< 1.40	< 1.40	< 1.40	0.0%
20075394	PROBE & FILTER RINSE	30	STACK BL TEST 4 BS/PR	< 1.40	< 1.40	< 1.40	0.0%
20075395	HEATED LINE RINSE	31	STACK BL TEST 4 BS/PR	< 1.40	< 1.40	< 1.40	0.0%
20075396	KCL IMPINGER	32	STACK BL TEST 4 BS/PR	1.51	1.62	1.57	7.0%
20075397	HNO3/H2O2 IMPINGER	33	STACK BL TEST 4 BS/PR	< 1.40	< 1.40	< 1.40	0.0%
20075398	KMNO4 IMPINGER	34	STACK BL TEST 4 BS/PR	0.37	0.38	0.38	2.7%
20075399	KMNO4 ACID RINSE	35	STACK BL TEST 4 BS/PR	< 1.40	< 1.40	< 1.40	0.0%
20075400	KCL IMPINGER	38	STACK BL BLANK	< 0.28	< 0.28	< 0.28	0.0%
20075401	HNO3/H2O2 IMPINGER	39	STACK BL BLANK	< 1.40	< 1.40	< 1.40	0.0%
20075402	KMNO4 IMPINGER	40	STACK BL BLANK	< 0.28	< 0.28	< 0.28	0.0%
20075403	KMNO4 ACID RINSE	41	STACK BL BLANK	< 1.40	< 1.40	< 1.40	0.0%
20075404	ZENO H2O BLANK	42		< 0.28	< 0.28	< 0.28	0.0%
20075405	KCL BLANK	43		< 0.28	< 0.28	< 0.28	0.0%
20075406	HNO3/HCL BLANK	44		< 1.40	< 1.40	< 1.40	0.0%
20075407	HNO3/H2O2 BLANK	45		< 1.40	< 1.40	< 1.40	0.0%
20075408	KMNO4 BLANK	46		< 0.28	< 0.28	< 0.28	0.0%
20075409	KMNO4 BLANK	47		< 0.28	< 0.28	< 0.28	0.0%

Mercury Duplicate Analyses RPD (Limit of 10%)..Filters

ANALNUM	DESCR	SAMPLE		Hg (ug/filter)	Hg (ug/filter)	RPD, %
	RPS Blank Filter			< 0.007	< 0.007	0.0%
	BL-1 Filter			0.112	0.109	2.7%
	BL-2 Filter			0.028	0.024	1.5%
	BL-3 Filter			< 0.007	< 0.007	0.0%
	BL-4 Filter			0.024	0.025	4.1%
	Filter 1070			1.162	1.153	0.8%
	Filter 1069			1.145	1.185	3.4%
	Filter 470101			0.103	0.102	1.0%
	Filter 470102			0.125	0.126	0.8%
	Filter 470103			0.201	0.202	5.0%
	Filter 470104			0.11	0.107	2.8%
	Filter 470105			0.113	0.111	1.8%
	Filter 470106			0.101	0.095	6.1%
	Filter 470107			0.06	0.06	0.0%

Mercury Triplicate Analyses - Filters..... RSD (Limit of 10%)

ANALNUM	DESCR	SAMPLE	Hg (ug/filter)	Hg (ug/filter)	Hg (ug/filter)	RSD, %
	BL-4 Filter		0.025	0.024	0.025	2.5%
20075406	HNO3/HCL BLANK	44	< 1.40	< 1.40	< 1.40	0.0%

Mercury Triplicate Analyses RSD (Limit of 10%)

Lab No.	Description			Hg (µg/L)	Hg (µg/L)	Hg (µg/L)	RSD, %
20075390	KCL IMPINGER	25	STACK BL TEST 3 BS/PR	1.23	1.29	1.30	3.0
20075392	KMNO4 IMPINGER	27	STACK BL TEST 3 BS/PR	0.3	0.29	0.28	3.4
20075389	HEATED LINE RINSE	24	STACK BL TEST 3 BS/PR	< 1.40	< 1.40	< 1.40	0.0
20075381	KMNO4 ACID RINSE	14	STACK BL TEST 2 BS/PR	< 1.40	< 1.40	< 1.40	0.0
20075403	KMNO4 ACID RINSE	41	STACK BL BLANK	< 1.40	< 1.40	< 1.40	0.0
20075397	HNO3/H2O2 IMPINGER	33	STACK BL TEST 4 BS/PR	< 1.40	< 1.40	< 1.40	0.0

Matrix (Standard Addition) Spikes (recovery of 90 - 110%)

The following samples were spiked with a standard solution of 2ppb.

Lab No.	Description			% Recovery
20075384	KCL IMPINGER	16	ESP INLET ESP TEST 1 JL/BG	99.5
20075398	KMNO4 IMPINGER	34	STACK BL TEST 4 BS/PR	110
20075395	HEATED LINE RINSE	31	STACK BL TEST 4 BS/PR	102
20075375	KMNO4 ACID RINSE	7	STACK BL TEST 1 BS/PR	101
20075407	HNO3/H2O2 BLANK	45		103
20075391	HNO3/H2O2 IMPINGER	26	STACK BL TEST 3 BS/PR	100
	BL-3 Filter			119

NIST SRM 1633B Fly Ash...Digested/Analyzed with Filters (90 -110% of Certified Value)

NIST SRM has a cerrtified value of 141 ng/g.

Lab No.	Description	Hg (ng/mg)	% RECOVERY
	1633B	133	94.3

Digestion Duplicates and Digestion Spikes...Impingers

Digestion 1 and 2 results represent an average of duplicate analyses. (RPD of 20%)

Lab No.	Description	Sample	Sample	Digestion 1	Digestion 2	RPD, %
20075396	KCL IMPINGER	32	STACK BL TEST 4 BS/PR	1.57	1.59	1.27
20075380	KMNO4 IMPINGER	13	STACK BL TEST 2 BS/PR	1.04	0.94	10.1
20075379	HNO3/H2O2 IMPINGER	12	STACK BL TEST 2 BS/PR	< 1.40	< 1.40	0.0

The following samples were spiked with a standard solution of 2 ppb before digestion. (Spike Recovery 75-125%)

Lab No.	Description			% Recovery
20075396	KCL IMPINGER	32	STACK BL TEST 4 BS/PR	108%
20075380	KMNO4 IMPINGER	13	STACK BL TEST 2 BS/PR	111%
20075379	HNO3/H2O2 IMPINGER	12	STACK BL TEST 2 BS/PR	113%

CONSOL ENERGY

Analytical Narrative

Summary

Samples were prepared and analyzed as outlined in ASTM D 6784-02 (Ontario Hydro Method).

Detection Limits

For samples determined to be less than the detection limit, results were reported as a less than value, based on the Thermo Unicam 969 detection limit of 0.14 µg/L multiplied with any sample dilution.

QAQC Summary

R2 for all calibration curves were > 0.999. NIST SRM 1641D, prepared to a concentration of 4.0 µg/L, was analyzed immediately after calibration (independent calibration verification sample). The recovery criteria was 90-110% or the run was stopped and the analyzer was re-calibrated. NIST 1641D (4.0 µg/L), was also used as the continuing calibration verification sample and analyzed after every 10 samples. The recovery was 90 -110% or the run was stopped, the analyzer was recalibrated, and the affected samples were re-analyzed. All samples were analyzed in duplicate with a limit of a 10% (RPD). One in 10 samples were analyzed in triplicate with a criteria limit of 10% (RSD). Matrix spikes were included at a 1 in 10 sample frequency with a criteria of 90 - 110 % spike recovery. Although not required by D 6784-02, (2) digestion duplicates and (3) digestion spikes, were included to assess the efficiency of the digestions. NIST SRM1633B was digested and analyzed with the filters with a criteria of 90 - 110%. There were two QAQC exception; sample 20075374 RPD was greater than 10% (12.7) and matrix spike for BL-3 Filter was outside the 90-110% recovery criteria (119%). These are identified in red font. Please refer to the QAQC worksheet for all QAQC data.

Disclaimer

In no event shall CONSOL Energy Inc. be liable for any direct, indirect, special, punitive, incidental, exemplary or consequential damages, or and damages what so ever, even if CONSOL Energy Inc. has been previously advised of the possibility of such damages, whether in an action under contract, negligence, or any other theory, arising out of or in connection with the use, inability to use, or performance of the information services, products, and materials provided in this data or this analysis. This is a comprehensive limitation of liability that applies to all damages of any kind, including (without limitation) compensatory, direct, indirect or consequential damages, loss of data, income or profit, loss of or damage to property and claims of third parties and resulting from any negligence of the CONSOL Energy Inc., except for gross negligence or willful misconduct.

CONSOL ENERGY

Submitted by: Jim Locke
Company: Clean Air Engineering
Date: 10/18/2007
General Description: Coal and Ash Samples

			Dry Concentration (Wt %)							Dry BTU/lb	Dry Concentration (ppm)
Analytical Number	Description	As Determined Moisture (Wt %)	Volatile Matter	Ash	Carbon	Hydrogen	Nitrogen	Chlorine	Sulfur	Heating Value	Mercury
20075435	RPS COAL 9/11/07	1.82	19.72	17.97	70.67	4.55	1.20	0.044	1.02	12242	0.198
20075436	ASH 9/11/07	0.11	1.44	61.51	37.07	1.47	0.36	0.014	0.07		1.141
20075437	MILL REJECTS 9/11/07	0.34	20.26	78.40	7.64	1.14	<0.01	0.005	6.05		1.117
20075438	RPS COAL 9/11/07	1.97	19.40	18.33	70.47	4.13	1.31	0.043	1.04	12275	0.176
20075439	ASH 9/11/07	0.07	2.20	59.97	38.48	1.64	0.40	0.012	0.09		1.713
20075440	MILL REJECTS 9/11/07	0.27	25.66	77.09	6.86	1.73	<0.01	0.004	5.83		0.839
20075441	RPS COAL 9/12/07	1.71	18.76	18.70	70.76	4.45	1.07	0.050	1.02	12285	0.201
20075442	ASH 9/12/07	10.01	2.61	59.53	49.77	0.63	0.45	0.021	0.12		2.527
20075443	MILL REJECTS 9/12/07	0.33	22.01	78.93	6.54	1.67	<0.01	0.004	5.89		1.084
20075444	RPS COAL 9/12/07	1.36	18.83	17.08	71.65	4.11	1.12	0.053	0.98	12441	0.158
20075445	ASH 9/12/07	<0.01	2.58	82.97	15.10	1.65	0.02	0.007	0.07		1.074
20075446	MILL REJECTS 9/12/07	0.46	15.98	80.00	7.24	1.79	<0.01	0.006	5.49		0.943
20075765	RPS COAL 9/25/07	2.43	18.54	18.27	71.67	4.55	1.24	0.043	0.87	12356	0.243
20075766	RPS ASH 9/25/07	0.03	2.07	88.42	8.90	1.80	<0.01	0.018	0.09		0.793
20075767	RPS MILL REJECTS 9/25/07	0.54	8.97	77.58	11.53	2.01	0.03	0.007	0.81		1.227
20075768	RPS COAL 9/26/07	2.26	17.87	18.77	70.81	4.49	1.14	0.038	0.80	12372	0.194
20075769	RPS ASH 9/26/07	0.02	2.88	67.59	31.74	2.04	0.24	0.011	0.16		3.191
20075770	RPS MILL REJECTS 9/26/07	0.54	9.54	77.32	10.73	2.45	0.05	0.005	0.95		1.458

CONSOL ENERGY

Submitted by: Jim Locke
Company: Clean Air Engineering
Date: 10/18/2007
General Description: Coal and Ash Samples

		Elemental Concentration in 750C Ash (Wt%)											
Analytical Number	Description	SiO2	Al2O3	TiO2	Fe2O3	CaO	MgO	Na2O	K2O	P2O5	SO3	L.O.I.	undetermined
20075435	RPS COAL 9/11/07	55.39	27.83	1.34	8.11	1.76	0.74	0.28	2.73	0.33	1.61		-0.12
20075436	ASH 9/11/07	31.93	18.90	0.95	6.74	1.09	0.49	0.17	1.65	0.33	0.24	38.49	-0.98
20075437	MILL REJECTS 9/11/07	45.30	11.01	0.57	17.87	16.81	1.98	0.13	1.44	0.16	4.90		-0.17
20075438	RPS COAL 9/11/07	53.40	29.28	1.70	7.56	1.63	0.78	0.24	2.50	0.30	1.64		0.97
20075439	ASH 9/11/07	30.32	18.49	0.99	6.37	1.05	0.47	0.14	1.55	0.31	0.23	40.03	0.05
20075440	MILL REJECTS 9/11/07	40.88	9.40	0.46	15.98	26.27	2.35	0.11	1.37	0.16	4.24		-1.22
20075441	RPS COAL 9/12/07	53.73	27.12	1.32	8.27	2.46	0.96	0.24	2.62	0.31	2.32		0.65
20075442	ASH 9/12/07	31.97	18.67	0.99	5.78	0.72	0.41	0.13	1.46	0.26	0.31	40.47	-1.17
20075443	MILL REJECTS 9/12/07	42.95	11.93	0.53	15.12	20.44	2.20	0.26	1.68	0.08	4.40		0.41
20075444	RPS COAL 9/12/07	57.02	30.03	1.56	6.33	1.05	0.65	0.23	2.63	0.25	0.99		-0.74
20075445	ASH 9/12/07	47.65	25.60	1.44	5.56	1.20	0.60	0.22	2.23	0.29	0.17	17.03	-1.99
20075446	MILL REJECTS 9/12/07	50.98	16.70	0.90	15.25	9.65	1.62	0.29	2.19	0.09	2.11		0.22
20075765	RPS COAL 9/25/07	56.24	29.53	1.47	7.38	0.70	0.67	0.42	2.41	0.34	0.39		0.45
20075766	RPS ASH 9/25/07	49.24	26.63	1.31	6.16	0.73	0.79	0.28	2.24	0.35	0.22	11.58	0.47
20075767	RPS MILL REJECTS 9/25/07	63.11	14.05	0.90	16.45	1.41	0.99	0.12	1.62	0.13	2.04		-0.82
20075768	RPS COAL 9/26/07	57.55	30.23	1.50	5.87	0.59	0.65	0.41	2.38	0.33	0.31		0.18
20075769	RPS ASH 9/26/07	35.39	21.07	1.10	6.13	0.76	0.50	0.23	1.62	0.43	0.39	32.41	-0.03
20075770	RPS MILL REJECTS 9/26/07	62.09	14.00	0.91	16.72	1.77	1.05	0.24	1.66	0.15	2.35		-0.94

CONSOL ENERGY

R. Paul Smith
CONSOL Project: 1621-92
Report Date: 9/19/2007

ANALNUM	DESCR	SAMPLE	mg/L	L	mg as SO_4^{2-}
20075342	PLUG RUN 1 9/11/07	PLUG R1	3.97	0.1	**0.40**
20075343	PROBE RUN 1 9/11/07	PROBE R1	43.81	0.1	**4.38**
20075344	CONDENSOR RUN 1 9/11/07	CONDENSOR R1	6.61	0.1	**0.66**
20075345	SAMPLE LINE RUN 1 9/11/07	SAMPLE LINE R1	22.24	0.1	**2.22**
20075346	ESP IN IMPINGER RUN 1 9/11/07	ESP IN R1	210.40	0.1	**21.04**
20075347	PLUG RUN 2 9/11/07	PLUG R2	4.26	0.1	**0.43**
20075348	PROBE RUN 2 9/11/07	PROBE R2	25.08	0.1	**2.51**
20075349	CONDENSOR RUN 2 9/11/07	CONDENSOR R2	8.42	0.1	**0.84**
20075350	SAMPLE LINE RUN 2 9/11/07	SAMPLE LINE R2	50.40	0.1	**5.04**
20075351	ESP IN IMPINGER RUN 2 9/11/07	ESP IN R2	278.85	0.108	**30.12**
20075352	PLUG RUN 3 9/11/07	PLUG R3	7.56	0.1	**0.76**
20075353	PROBE RUN 3 9/11/07	PROBE R3	19.27	0.107	**2.06**
20075354	CONDENSOR RUN 3 9/11/07	CONDENSOR R3	5.72	0.1	**0.57**
20075355	SAMPLE LINE RUN 3 9/11/07	SAMPLE LINE R3	57.89	0.121	**7.00**
20075356	ESP IN IMPINGER RUN 3 9/11/07	ESP IN R3	126.30	0.1	**12.63**
20075357	PLUG RUN 4 9/11/07	PLUG R4	5.81	0.114	**0.66**
20075358	PROBE RUN 4 9/11/07	PROBE R4	1.51	0.1	**0.15**
20075359	CONDENSOR RUN 4 9/11/07	CONDENSOR R4	6.43	0.1	**0.64**
20075360	SAMPLE LINE RUN 4 9/11/07	SAMPLE LINE R4	30.15	0.1	**3.02**
20075361	ESP INLET IMPINGER RUN 4 9/11/07	ESP IN R4	362.50	0.1	**36.25**
20075362	3% H2O2 BLANK 9/11/07	3% H2O2 BLANK	< 0.20	0.1	**< 0.02**

APPENDIX C

Control Room Data

C

	4A-FEEDE.PV	4B-FEEDE.PV	4C-FEEDE.PV	4D-FEEDE.PV	4C083	4AI0787	#/h mill A	#/h mill B
11-Sep-07 09:00:00	0.12	71.10	73.21	85.10	267.60	336.40	0.00	25594.37
11-Sep-07 10:00:00	0.12	71.97	74.16	86.06	300.74	336.39	0.00	25910.44
11-Sep-07 11:00:00	0.11	72.98	74.36	86.07	304.03	335.73	0.00	26271.37
11-Sep-07 12:00:00	0.11	67.98	69.94	81.11	301.43	330.32	0.00	24473.28
11-Sep-07 13:00:00	0.11	73.93	76.17	87.56	276.45	337.34		0.00
11-Sep-07 14:00:00	0.11	73.96	75.89	87.33	280.15	338.86		0.00
11-Sep-07 15:00:00	0.11	73.93	76.18	88.08	303.46	337.50		0.00
11-Sep-07 16:00:00	0.11	66.84	68.94	80.97	303.85	336.26		0.00
11-Sep-07 17:00:00	0.11	75.91	77.71	89.52	304.31	334.50		0.00
11-Sep-07 18:00:00	0.11	71.93	74.16	85.11	306.62	337.16		0.00
12-Sep-07 10:00:00	0.11	71.02	76.13	83.33	279.24	342.62		0.00
12-Sep-07 11:00:00	0.11	73.98	79.16	87.11	273.01	346.82		0.00
12-Sep-07 12:00:00	0.11	72.58	77.56	85.13	271.21	345.17		0.00
12-Sep-07 13:00:00	0.11	72.98	78.26	86.08	270.19	343.72		0.00
12-Sep-07 14:00:00	0.12	73.03	78.16	86.08	268.95	344.49		0.00
12-Sep-07 15:00:00	0.12	73.96	79.19	87.11	270.98	339.51		0.00
12-Sep-07 16:00:00	0.12	73.96	79.21	87.48	271.73	339.32		0.00
12-Sep-07 17:00:00	0.12	73.94	80.47	89.10	274.63	346.75		0.00

	#/h mill C	#/h mill D		#/hour	Stack Temp	Precip inlet temp	
11-Sep-07 09:00:00	26355.53	30635.82	82585.72	82585.72	267.60	336.40	
11-Sep-07 10:00:00	26698.36	30980.50	83589.30	83589.30	300.74	336.39	
11-Sep-07 11:00:00	26769.67	30986.48	84027.51	84027.51	304.03	335.73	
11-Sep-07 12:00:00	25178.06	29199.38	78850.72	78850.72	301.43	330.32	
11-Sep-07 13:00:00	26616.38	27421.77	31520.01	85558.16	85558.16	276.45	337.34
11-Sep-07 14:00:00	26623.83	27320.44	31439.84	85384.11	85384.11	280.15	338.86
11-Sep-07 15:00:00	26614.69	27425.12	31708.83	85748.64	85748.64	303.46	337.50
11-Sep-07 16:00:00	24063.00	24819.49	29148.98	78031.47	78031.47	303.85	336.26
11-Sep-07 17:00:00	27326.17	27976.43	32226.72	87529.32	87529.32	304.31	334.50
11-Sep-07 18:00:00	25893.06	26698.36	30639.15	83230.57	83230.57	306.62	337.16
12-Sep-07 10:00:00	25566.37	27407.51	30000.34	82974.22	82974.22	279.24	
12-Sep-07 11:00:00	26633.81	28496.88	31357.97	86488.66	86488.66	273.01	
12-Sep-07 12:00:00	26128.13	27922.32	30647.11	84697.56	84697.56	271.21	
12-Sep-07 13:00:00	26272.27	28174.27	30988.83	85435.36	85435.36	270.19	
12-Sep-07 14:00:00	26289.86	28137.31	30988.83	85416.00	85416.00	268.95	344.49
12-Sep-07 15:00:00	26623.83	28507.58	31357.97	86489.37	86489.37	270.98	339.51
12-Sep-07 16:00:00	26623.83	28515.23	31492.42	86631.48	86631.48	271.73	339.32
12-Sep-07 17:00:00	26619.43	28969.01	32074.31	87662.75	87662.75	274.63	346.75

Full Scale Field Trial of the Low Temperature Mercury Capture Process

U.S. DOE Cooperative Agreement No. DE-FC26-06NT42777

Parametric Test Results
Initial Magnesium Hydroxide Injection Tests
Temperature Reduction Trial
At Allegheny Energy R. Paul Smith Unit 4

Introduction

On September 25 and 26, 2007, CONSOL Energy Inc. Research and Development (CONSOL) conducted a trial run of the magnesium hydroxide ($Mg(OH)_2$) slurry injection system of the CONSOL Full-Scale Field Trial of the Low Temperature Mercury Capture Project to determine the Unit 4 Evaporative Gas Cooling (EGC) system capacity for temperature reduction and to test the operation of the newly installed $Mg(OH)_2$ slurry injection sulfur trioxide (SO_3) control system. Flue gas mercury removal determinations were also made during the trial run and the results were compared to the baseline flue gas evaluation CONSOL conducted on Unit 4 on September 11 and 12, 2007.[1]

Test Program and Results

A $Mg(OH)_2$ to SO_3 molar ratio of 5:1 was selected to ensure there was adequate protection against SO_3 condensation at the reduced flue gas temperature planned to prove the LTMC process. To achieve this ratio, CONSOL calculated a $Mg(OH)_2$ injection rate of 108 pounds per hour of the 60 percent solids $Mg(OH)_2$ slurry utilized during the trial run would be necessary.

The LTMC process demonstration plan incorporates the existing Unit 4 EGC to reduce flue gas temperatures to a targeted level of less than 230 °F to enhance mercury capture. During the trial run, Unit 4 was operating at 84 MW. The $Mg(OH)_2$ slurry was introduced to the EGC system at a rate of 92.5 lb/hr (dry basis), which is 84 percent of the slurry injection capacity. The EGC water flow rate was gradually increased to the system's maximum flow rate of 19 gallons per minute in attempt to decrease the flue gas temperatures to the targeted level for LTMC operation; however, the high ambient temperatures (~90 °F) limited the EGC ability to decrease the flue gas temperature to an average of 250 °F.

Despite the higher than desired flue gas temperatures, flue gas mercury measurements were performed at the stack using the Ontario-Hydro Flue Gas Mercury Speciation Method (OH) (ASTM D6784-02) to determine if there was any improvement in mercury reduction from the reported baseline reduction. Table 1 summarizes the boiler coal

[1] Topical report: "Baseline Mercury and Sulfur Trioxide Evaluation Field Testing Conducted September 11 and 12, 2007 at the Allegheny Energy R. Paul Smith Station Unit 4."

feed rates and feed coal mercury concentrations along with flue gas temperatures and mercury concentrations for the baseline testing and the temperature reduction trial.

Table 1. Test Period Comparison of Mercury Speciation and Removal

Sample Date	9/12/2007		9/25/2007		9/26/2007	
Test Condition	Baseline EGC On		$Mg(OH)_2$ Injection		$Mg(OH)_2$ Injection	
Measurement Point	Coal Feed	Stack	Coal Feed	Stack	Coal Feed	Stack
Coal Feed Rate (kpph, dry)	81.2		74.7		75.2	
Coal Hg (ppm, dry)	0.158		0.243		0.194	
Coal Hg (lb/Tbtu)	12.7		19.7		15.7	
Coal Hg (mg/sec)	1.62		2.29		1.84	
Flow (dscmm)		6,290		6,670		6,650
Flue Gas Temperature (°F)		279		277		250
Particle-Bound Hg (mg/sec)		0.01		0.11		0.12
Vapor-Phase Ionic Hg (mg/sec)		0.09		0.05		0.04
Vapor-Phase Elemental Hg (mg/sec)		0.02		0.007		0.004
Total Hg (mg/sec)		0.13		0.17		0.16
Coal-to-Stack Removal	92.0		92.6		91.3	

Table 1 shows that, even with the high water flow rate of the EGC, temperatures could not be reduced sufficiently below those measured during baseline testing. As a result, there was no appreciable change in mercury removal.

Summary

High ambient temperatures of approximately 90 °F prevented the EGC from cooling the flue gas to less than 250 °F. The mercury removals measured during the $Mg(OH)_2$ injection trial averaged 92 percent, which is identical to the removal that was measured during the preliminary baseline testing. The addition of $Mg(OH)_2$ provided no improvement in the removal at a flue gas temperature of 250 °F.

APPENDIX C
Jamestown BPU Emissions Testing Information

Jamestown BPU

Samuel A Carlson Station

LTMC Baseline Tests

Test Number		1		2		3		4	
Location		Stack		Stack		Stack		Stack	
Date		3/24/09		3/24/09		3/24/09		3/26/09	
Boiler Operation		2 mill		2 mill		1 mill		1 mill	
Train ID (A, B, C, or D)		A	B	A	B	A	B	A	B
Trap ID		2133	2134	2155	2164	2125	2126	2149	2153
Sorbent Batch Lot No.		5430	5430	5430	5430	5430	5430	5430	5430
Start Time		1005	1005	1159	1159	1500	1500	826	826
Stop Time		1105	1105	1259	1259	1600	1600	926	926
Y factor of dry gas meter	-	0.982	1.000	0.982	1.000	0.982	1.000	0.982	1.000
Gas Volume	- L	29.93	30.00	30.10	30.00	30.01	30.10	30.10	30.15
Meter Temperature	- °F	57.0	59.0	72.2	73.3	85.5	86.2	53.7	55.8
Sample Time	- minutes	60	60	60	60	60	60	60	60
Barometric Pressure	- " Hg	29.00	29.00	29.00	29.00	29.00	29.00	29.00	29.00
% Oxygen	-								
Sample Volume	- L	29.09	29.57	28.42	28.78	27.64	28.20	29.44	29.91
Sample Volume	- dscm	0.029	0.030	0.028	0.029	0.028	0.028	0.029	0.030
Average Stack Flow	- dscfm	86183		75917		55508		64158	
Average Stack Flow	- dscmm	2441		2150		1572		1817	
Average Heat Input	- mmBtu/hr	267.2		220.9		138.8		147.6	
Coal HHV (pulverized)	- Dry Btu/lb	13351		13278		13500		13219	
Calc'd Coal Feed	- lb/hr	20010		16637		10278		11162	
Coal Mercury	- ppm, dry	0.209		0.201		0.163		0.200	
Coal Mercury Feed	- lb/hr	4.18E-03		3.34E-03		1.68E-03		2.23E-03	
Coal Mercury Feed	- lb/Tbtu	15.65		15.14		12.07		15.13	
Coal Ash Content	- %, dry	11.17		11.50		10.60		11.98	
ESP Ash Loading	- lb/hr	2235.1		1913.2		1089.4		1337.2	

Spike Values:								
Analytical Spike Mass - µg	0	0	0	0	0	0	0	0
Analytical Results:								
Section 1 Mass - µg	0.736	0.534	0.00785	0.65	0.0127	0.369	0.564	0.565
Section 2 Mass - µg	0.00298	0.00258	0.00383	0.00273	0.00223	0.00273	0.00238	0.00285
Analytical Spike Result - µg	0	0						
Calculated Results:								
Analytical Spike Recovery - %	0.0	0.0	0.0	0.0	0.0	0.0	0.0	0.0
Bed Section Breakthrough - %	0.40	0.48	48.79	0.42	17.56	0.74	0.42	0.50
Tube Concentration - µg/dscm, dry	25.41	18.14	0.41	22.68	0.54	13.18	19.24	18.99
Pair Agreement - %	16.68		96.44		92.13		0.66	
Reporting Concentration - µg/dscm	21.77		11.55		6.86		19.11	

Emissions				
Hg, lb/hr	7.03E-03	6.45E-03	2.74E-03	4.59E-03
Hg, lb/Tbtu	26.31	29.20	19.76	31.13
Removal, %	-68.10	-92.88	-63.63	-105.76

Jamestown BPU

Samuel A Carlson Station
LTMC 230 Deg. F Tests

Test Number		5		6		7		8	
Location		Stack		Stack		Stack		Stack	
Date		3/26/09		3/26/09		3/27/09		3/27/09	
Boiler Operation		1 mill		1 mill		2 mill		2 mill	
Train ID (A, B, C, or D)		A	B	A	B	A	B	A	B
Trap ID		2143	2145	2121	2130	2141	2162	2116	2136
Sorbent Batch Lot No.		5430	5430	5430	5430	5430	5430	5430	5430
Start Time		1505	1505	1626	1626	824	824	951	951
Stop Time		1605	1605	1726	1726	924	924	1051	1051
Y factor of dry gas meter	-	0.982	1.000	0.982	1.000	0.982	1.000	0.982	1.000
Gas Volume	- L	30.10	30.05	49.36	49.32	48.75	48.73	48.43	48.45
Meter Temperature	- °F	82.5	83.7	82.8	84.2	69.5	70.5	78.7	79.7
Sample Time	- minutes	60	60	60	60	60	60	60	60
Barometric Pressure	- " Hg	29.00	29.00	29.00	29.00	29.00	29.00	29.00	29.00
% Oxygen	-								
Sample Volume	- L	27.88	28.28	45.69	46.37	46.27	47.00	45.17	45.93
Sample Volume	- dscm	0.028	0.028	0.046	0.046	0.046	0.047	0.045	0.046
Average Stack Flow	- dscfm	63350		63033		86442		84467	
Average Stack Flow	- dscmm	1794		1785		2448		2392	
Default Moisture	- %	6		6		6		6	
Average Stack Flow	- dscmm	1686		1678		2301		2249	
Average Heat Input	- mmBtu/hr	151.0		150.3		267.9		266.1	
Coal HHV (pulverized)	- Dry Btu/lb	13211		13174		13257		12869	
Calc'd Coal Feed	- lb/hr	11430		11405		20208		20674	
Coal Mercury	- ppm, dry	0.382		0.384		0.352		0.317	
Coal Mercury Feed	- lb/hr	4.37E-03		4.38E-03		7.11E-03		6.55E-03	
Coal Mercury Feed	- lb/Tbtu	28.92		29.15		26.55		24.63	
Coal Ash Content	- %, dry	11.69		12.11		11.29		11.06	
ESP Ash Loading	- lb/hr	1336.2		1381.2		2281.5		2286.5	

Spike Values:								
Analytical Spike Mass - µg	0	0	0	0	0	0	0	0
Analytical Results:								
Section 1 Mass - µg	0.453	0.422	0.73	0.739	0.00595	0.122	0.156	0.16
Section 2 Mass - µg	0.00406	0.00352	0.00555	0.00461	0.00299	0.00128	0.00159	0.00131
Analytical Spike Result - µg	0	0	0	0	0	0	0	0
Calculated Results:								
Analytical Spike Recovery - %	0.0	0.0	0.0	0.0	0.0	0.0	0.0	0.0
Bed Section Breakthrough - %	0.9	0.8	0.8	0.6	50.3	1.0	1.0	0.8
Tube Concentration - µg/dscm, dry	16.40	15.05	16.10	16.04	0.19	2.62	3.49	3.51
Pair Agreement - %	4.29		0.20		86.28		0.33	
Reporting Concentration - µg/dscm	15.72		16.07		1.41		3.50	

Emissions				
Hg, lb/hr	3.51E-03	3.57E-03	4.29E-04	1.04E-03
Hg, lb/Tbtu	23.23	23.74	1.60	3.91
Removal, %	19.68	18.57	93.97	84.11

Preliminary LTMC Baseline and Initial Operations Testing

Test Number	1	2	3	4	5	6	7	8
Date	3/24/09	3/24/09	3/24/09	3/26/09	3/26/09	3/26/09	3/27/09	3/27/09
Boiler Operation	2 mill	2 mill	1 mill	1 mill	1 mill	1 mill	2 mill	2 mill
LTMC Operation	None - Baseline	None - Baseline	None - Baseline	None - Baseline	230 °F	230 °F	230 °F	230 °F
Heat Input mmBtu/hr	267.2	220.9	138.8	147.6	151.0	150.3	267.9	266.1
Concentration µg/dscm	21.77	11.54	6.86	19.11	15.72	16.01	1.41	3.50
Hg, lb/hr	7.03E-03	6.45E-03	2.74E-03	4.59E-03	3.73E-03	3.78E-03	4.56E-04	1.11E-03
Hg, lb/Tbtu	26.31	29.20	19.76	31.13	24.71	25.16	1.70	4.16
Average lb/TBtu	27.76		25.45		24.94		2.93	

Jamestown BPU

Samuel A Carlson Station

LTMC 220 Deg. F Tests

Test Number		1		2		3	
Location		Stack		Stack		Stack	
Date		4/2/09		4/2/09		4/3/09	
Boiler Operation		2 mills		2 mills		2 mills	
Train ID (A, B, C, or D)		A	B	A	B	A	B
Trap ID		2127	2146	2140	2161	2154	2160
Sorbent Batch Lot No.		5430	5430	5430	5430	5430	5430
Start Time		1400	1400	1522	1522	800	800
Stop Time		1500	1500	1622	1622	900	900
Y factor of dry gas meter	-	0.982	1.000	0.982	1.000	0.982	1.000
Gas Volume	- L	60.02	60.05	60.02	60.06	60.01	60.10
Meter Temperature	- °F	82.5	84.2	87.3	89.3	74.5	76.2
Sample Time	- minutes	60	60	60	60	60	60
Barometric Pressure	- " Hg	29.00	29.00	29.00	29.00	29.00	29.00
% Oxygen	-						
Sample Volume	- L	55.59	56.45	55.10	55.94	56.41	57.34
Sample Volume	- dscm	0.056	0.056	0.055	0.056	0.056	0.057
Average Stack Flow	- wscfm	79425		79217		84892	
Average Stack Flow	- wscmm	2249		2243		2404	
Default Moisture	- %	6		6		6	
Average Stack Flow	- dscmm	2114		2109		2260	
Average Heat Input	- mmBtu/hr	230.4		231.1		251.9	
Coal HHV (pulverized)	- Dry Btu/lb	13171		13454		13610	
Calc'd Coal Feed	- lb/hr	17489		17173		18505	
Coal Mercury	- ppm, dry	0.405		0.251		0.194	
Coal Mercury Feed	- lb/hr	7.08E-03		4.31E-03		3.59E-03	
Coal Mercury Feed	- lb/Tbtu	30.75		18.66		14.25	
Coal Ash Content	- %, dry	11.52		10.15		9.61	
ESP Ash Loading	- lb/hr	2014.8		1743.1		1778.3	

Spike Values:						
Analytical Spike Mass - µg	0	0	0	0	0	0
Analytical Results:						
Section 1 Mass - µg	0.485	0.476	0.312	0.316	0.0737	0.0761
Section 2 Mass - µg	0.006	0.00348	0.00457	0.0054	0.00294	0.00296
Analytical Spike Result - µg	0	0	0	0	0	0
Calculated Results:						
Analytical Spike Recovery - %	0.0	0.0	0.0	0.0	0.0	0.0
Bed Section Breakthrough - %	1.2	0.7	1.5	1.7	4.0	3.9
Tube Concentration - µg/dscm, dry	8.83	8.49	5.75	5.75	1.36	1.38
Pair Agreement - %	1.96		0.00		0.74	
Reporting Concentration - µg/dscm	8.66		5.75		1.37	

Emissions			
Hg, lb/hr	2.42E-03	1.60E-03	4.09E-04
Hg, lb/Tbtu	10.52	6.94	1.62
Removal, %	65.79	62.82	88.60

CONSOL ENERGY

4000 Brownsville Road, South Park, PA 15129
412 854 6602 www.consolresearch.com

CONSOL

Ultility Company: Jamestown BPU
Site: Jamestown BPU
Unit: 1
PO:
Project: 1621 - 094 -

Unit Code: JB-001
Batch File: K2JIMRATTS.xls

Distribution:

Lab Sample	Trap ID	Other ID	Start Date	End Date	Spike Lot	Spike Mass	Section	Hg Concentration	%	
900381	2127	A Side	4/2/09	4/2/09			Front (ng)	485.		
900382	2127	A Side	4/2/09	4/2/09			Back (ng)	6.	Breakthrough	1.24
	RATA traps						Total (ug)	0.49		
							Paired Trap % RD	0.00		
							(Assumes equal gas volume)			
900383	2146	B Side	4/2/09	4/2/09			Front (ng)	476.		
900384	2146	B Side	4/2/09	4/2/09			Back (ng)	3.48	Breakthrough	.73
							Total (ug)	0.48		
							Paired Trap % RD	0.00		
							(Assumes equal gas volume)			
900385	2146	A Side	4/2/09	4/2/09			Front (ng)	312		
900386	2146	A Side	4/2/09	4/2/09			Back (ng)	4.57	Breakthrough	1.46
							Total (ug)	0.32		
900387	2161	B Side	4/2/09	4/2/09			Front (ng)	316.		
900388	2161	B Side	4/2/09	4/2/09			Back (ng)	5.4	Breakthrough	1.71
							Total (ug)	0.32		
							Paired Trap % RD	0.76		
							(Assumes equal gas volume)			
900389	2154	A Side	4/2/09	4/2/09			Front (ng)	73.7		
900390	2154	A Side	4/2/09	4/2/09			Back (ng)	2.94	Breakthrough	3.99
							Total (ug)	0.08		
900391	2160	B Side	4/2/09	4/2/09			Front (ng)	76.1		
900392	2160	B Side	4/2/09	4/2/09			Back (ng)	2.96	Breakthrough	3.89
							Total (ug)	0.08		
							Paired Trap % RD	1.55		
							(Assumes equal gas volume)			
900394	45221	A Side	4/2/09	4/2/09			Back (ng)	1.47	Breakthrough	
900395	45221	A Side	4/2/09	4/2/09	Lumex	10000	Spike (ng)	10284.	Spike Recovery	
	Trap with acid gas filter. 2g spike bed						Total (ug)	0.00		
900396	24586	A Side	4/2/09	4/3/09			Front (ng)	2099.		
900397	24586	A Side	4/2/09	4/3/09			Back (ng)	10.5	Breakthrough	.50
900398	24586	A Side	4/2/09	4/3/09	Lumex	500	Spike (ng)	555.	Spike Recovery	111.00
	0.5g bed 9:30-8:45						Total (ug)	2.11		
							Paired Trap % RD	100.00		
							(Assumes equal gas volume)			
900399	24545	B Side	4/2/09	4/3/09			Front (ng)	2021.		
900400	24545	B Side	4/2/09	4/3/09			Back (ng)	19.9	Breakthrough	.98
900401	24545	B Side	4/2/09	4/3/09	Lumex	500	Spike (ng)	624.	Spike Recovery	124.80

CONSOL Energy Inc, R&D
4000 Brownsville Road, South Park, PA 15129
412 854 6600 www.consolresearch.com

CONSOL

Company: Jamestown BPU

Site: Jamestown BPU

PO:

Project No.: 1621 094

JB-001

Date: 4/17/2009

Lab Sample	Trap ID	Other ID	Start Date	End Date	Spike Lot	Spike Mass	Section	Hg (Total ng)	% Breakthrough	% Spike Recovery
900396	24586	A Side	4/2/09	4/3/09	Lumex	500	Front	2099.	0.5	111
900397	24586	A Side	4/2/09	4/3/09	Lumex	500	Back	10.5	0.5	111
900398	24586	A Side	4/2/09	4/3/09	Lumex	500	Spike	555.	0.5	111
0.5g bed 9:30-8:45										
900399	24545	B Side	4/2/09	4/3/09	Lumex	500	Front	2021.	1.0	125
900400	24545	B Side	4/2/09	4/3/09	Lumex	500	Back	19.9	1.0	125
900401	24545	B Side	4/2/09	4/3/09	Lumex	500	Spike	624.	1.0	125
0.5g bed 9:30-8:45										

All results meet laboratory quality control guidelines unless stated otherwise above. To the best of my knowledge all results are accurate. Services rendered by CONSOL Energy Inc, R&D are without warranty or liability of any kind beyond the cost of the analytical services.

Vincent B. Conrad

Date: 4/17/2009

CONSOL ENERGY

CONSOL Energy Inc, R&D
4000 Brownsville Road, South Park, PA 15129
412 854 6600 www.consolresearch.com

CONSOL

Company: Jamestown BPU

Site: Jamestown BPU

PO:

Project No.: 1621 094

JB-001

Date: 4/17/2009

Lab Sample	Trap ID	Other ID	Start Date	End Date	Spike Lot	Spike Mass	Section	Hg (Total ng)	% Breakthrough	% Spike Recovery
900393	45221	A Side	4/2/09	4/2/09	Lumex	10000	Front	2.2		103
900394	45221	A Side	4/2/09	4/2/09	Lumex	10000	Back	1.47		103
900395	45221	A Side	4/2/09	4/2/09	Lumex	10000	Spike	10284		103

Trap with acid gas filter. 2g spike bed

All results meet laboratory quality control guidelines unless stated otherwise above. To the best of my knowledge all results are accurate. Services rendered by CONSOL Energy Inc, R&D are without warranty or liability of any kind beyond the cost of the analytical services.

Vincent B. Conrad

Date: 4/17/2009

North Stack Hg Sample Results 2008

Append K Tubes Spiked at 10,000 ng

Date	Time CEMS time	Trap ID #	Heat Input mmBtu/hr	Steam Load	Flow Volume mmscf	Hg Coal (PPM)	BPU APEX Results Ng	Total Trap Flow (L)	Hg Conc. Dry Basis ug/dscm	Hg Avg Dry Basis ug/dscm	Default Moisture %	Hg Avg Wet Basis ug/wscm	Hg Conc. lbs	Hg lbs/TBtu	Lbs Hg	Comments
10/10/08	Start - 7:15	A - 29331	2831.01	354	41.43		1892	95.785	19.7526							4 mils
10/10/08	Fin - 12:55	B - 29378	# 9, 12				1837	93.606	19.6248	19.6887	6.0	18.5074	0.04787	16.908272	0.047867312	
11/7/08	Start - 10:40	A - 29361	23322.97	67.8	463.98		4042.2	2866.023	1.4104							1 mil
11/14/08	Fin - 8:50	B - 29356	# 9				4001.6	2949.41	1.3567	1.3836	6.0	1.3006	0.03767	1.6151922	0.03758744	
11/14/08	Start - 9:19	A - 34790	29704.41	102.5	528.79		19115	2530.044	7.5552							1 and
11/20/08	Fin - 13:18	B - 34810	# 9				19318	2799.117	6.9015	7.2283	6.0	6.7946	0.22430	7.55108462	0.225447459	then 2 mills
11/20/08	Start - 13:36	A - 37856	23889.5	132	381.93		16105	1610.075	10.0026							2 mils
11/24/08	Fin - 9:33	B - 37835	# 9				17602.4	1650.603	10.6642	10.3334	6.0	9.7134	0.23160	9.6946057	0.231650671	
11/24/08	Start - 13:31	A - 37851	29654.3	86	529.26		13703.7	2698.853	5.0776							2 mils
12/1/08	Fin - 13:31	B - 37863	# 9				13503.2	2737.884	4.9320	5.0048	6.0	4.7045	0.15544	5.24175059	0.156514491	
12/8/08	Start - 12:11	A - 37865	13766.84	86	332.85		44001.8	1638.771	26.8505							1 mil
12/12/08	Fin - 8:51	B - 37812	# 12				49400.5	1681.009	29.3874	28.1189	6.0	26.4318	0.54923	39.8953457	0.554414508	
12/12/08	Start - 9:17	A - 37820	18308.15	88	441.07		44101.1	2190.299	20.1347							1 mil
12/17/08	Fin - 8:57	B - 37867	# 12				44502.9	2265.732	19.6417	19.8882	6.0	18.6949	0.51477	28.1169479	0.514294162	
12/17/08	Start - 9:20	A - 37804	39657.7	138	763.01		77003	3603.631	21.3682							1 and
12/24/08	Fin - 9:20	B - 37862	# 12				76609.8	3643.435	21.0268	21.1975	6.0	19.9256	0.94913	23.9329351	0.94006913	then 2 mills
12/26/08	Start - 13:49	A - 29403	8203.49	76	215.77		15856	1143.628	13.8646							1 mil
12/29/09	Fin - 6:41	B - 34777	# 12				15344	1188.814	12.9070	13.3858	6.0	12.5827	0.16949	20.6607499		
1/5/09	Start - 9:55	A - 34824	45262.7	155	948.08		46002.2	3127.08	14.7109							1 mil each
1/12/09	Fin - 9:55	B - 34825	# 9 and 12				48001.5	3247.015	14.7833	14.7471	6.0	13.8623	0.82047	18.1267422		
1/12/09	Start - 11:00	A - 39129	25083.4	158	525.03		14800.9	1610.346	9.1911							1 mil each
1/16/09	Fin - 7:00	B - 35593	# 9 and 12				13900.8	1669.094	8.3284	8.7597	6.0	8.2342	0.26989	10.7596419		Spec trap
1/19/09	Start - 9:00	A - 39114	40546.4	145	855.52		47701.8	2793.555	17.0757							1 mil each
1/26/09	Fin - 9:00	B - 39242	# 9 and 12				50101.2	2866.368	17.4790	17.2773	6.0	16.2407	0.86739	21.3925804		Spec trap
1/27/09	Start - 10:00	A - 29383	6410.1	142	123.8		4929.3	437.735	11.2609							2 mils
1/29/09	Fin - 11:17	B - 34779	# 9 and 12				4784	446.903	10.7048	10.9829	6.0	10.3239	0.07979	12.4474354		(Lost boilers)
2/2/09	Start - 10:30	A - 39412	31768.64	101	619.11		17139	2641.434	6.4885							2 mils
2/9/09	Fin - 8:49	B - 39448	# 9				16636.7	2656.807	6.2619	6.3752	6.0	5.9927	0.23162	7.29076503		Spec SO2 trap
2/9/09	Start - 9:15	A - 39422	10124.27	66	222.73		1590.3	976.031	1.6294							1 mil
2/12/09	Fin - 15:05	B - 39457	# 9				1607.9	1323.164	1.2152	1.4223	6.0	1.3369	0.01859	1.83614518		Spec SO2 trap
2/26/09	Start - 12:26	A - 39484	34028.69	112	716.48		26438.3	2717.5	9.7289							1 and 2 mils
3/5/09	Fin - 10:19	B - 39496	# 9 and 12				28239.1	2786.15	10.1355	9.9322	6.0	9.3363	0.41760	12.2719628		Spec SO2 trap
3/10/09	Start - 7:35	A - 45132	19819.55	172	391.2		11485	1093.74	10.5007							North Stack
3/13/09	Fin - 9:57	B - Broke	# 9 and 12				11485	1115.35	10.2972	10.3989	6.0	9.7750	0.23872	12.0448971		2 mils B trap broke
3/19/09	Start - 10:00	A - 45236	18838.65	97	479.05		16733	1803.694	9.2771							North Stack
3/24/09	Fin - 10:31	B - 45237	# 9 and 12				16832	1843.298	9.1315	9.2043	6.0	8.6520	0.25875	13.735013		1 mil, then 2 mils
3/24/09	Start - 11:10	A - 45204	178	141	4		458.5	29.349	15.6223							North Stack (console)
3/24/09	Fin - 12:10	B - 45152	Boiler 12				647.6	30.054	21.5479	18.5851	6.0	17.4700	0.00436	24.5083441		2 mils Baseline
3/24/09	Start - 14:12	A - 45128	137	83	3.2		253.3	29.761	8.5111							North Stack (console)
3/24/09	Fin - 15:12	B - 45130	Boiler 12				324.2	29.877	10.8512	9.6811	6.0	9.1003	0.00182	13.2698225		1 mil Baseline
3/25/09	Start - 7:26	A - 45134	152.8	91.5	3.35		450.1	29.376	15.3220							North Stack (console)
3/25/09	Fin - 8:26	B - 45137	Boiler 12				466.7	29.751	15.6869	15.5044	6.0	14.5742	0.00305	19.9474171		1 mil Baseline
3/26/09	Start - 14:05	A - 45139	151.6	96	3.79		330	29.127	11.3297							North Stack (console)
3/26/09	Fin - 15:05	B - 45140	Boiler 12				490	29.578	16.5664	13.9480	6.0	13.1111	0.00310	20.4626444		1 mil H20-1
3/26/09	Start - 15:26	A - 45146	148.2	92	3.78		361	28.852	12.5121							North Stack (console)
3/26/09	Fin - 16:26	B - 45006	Boiler 12				393	29.33	13.3992	12.9557	6.0	12.1783	0.00287	19.391572		1 mil H20-2
3/27/09	Start - 7:24	A - 45154	266.1	177	5.07		59.4	29.641	2.0040							North Stack (console)
3/27/09	Fin - 8:25	B - 45230	Boiler 12				74.8	30.216	2.4755	2.2397	6.0	2.1054	0.00067	2.50420906		2 mils H20-1
3/27/09	Start - 8:51	A - 45240	234.25	164	4.69		106	29.01	3.6539							North Stack (console)
3/27/09	Fin - 9:52	B - 45192	Boiler 12				104	29.47	3.5290	3.5915	6.0	3.3760	0.00099	4.21962095		2 mils H20-2
3/27/09	Start - 14:07	A - 45227	22401.9	167	446.92		13549	1350.95	10.0292							North Stack (console)
3/31/09	Fin - 7:03	B - 45241	Boiler 12				13295	1398.78	9.5047	9.7670	6.0	9.1810	0.25615	11.4344129		2 mils H20
3/31/09	Start - 9:25	A - 45197	5334.5	163	104.73		2800	274.098	10.2153							North Stack (console)
4/1/09	Fin - 7:25	B - 45239	Boiler 12				2974	286.911	10.3656	10.2905	6.0	9.6730	0.06324	11.8555248		2 mils H20
4/1/09	Start - 7:38	A - 24566	6321.62	166	127.64		2050	368.446	5.5639							North Stack (console)
4/2/09	Fin - 9:10	B - 24546	Boiler 12				1940	382.197	5.0759	5.3199	6.0	5.0007	0.03985	6.30335507		2 mils H20
4/2/09	Start - 9:30	A - 24586	5495.75	163	111.81		2099	334.337	6.2781							North Stack (console)
4/3/09	Fin - 8:25	B - 24545	Boiler 12				2021	346.303	5.8359	6.0570	6.0	5.6936	0.03974	7.23137797		2 mils H20
4/3/09	Start - 10:18	A - 45185	10629.96	98	262.83		6403.5	1000.157	6.4025							North Stack (console)
4/6/09	Fin - 7:18	B - 45218	Boiler 12				6693	1034.493	6.4698	6.4362	6.0	6.0500	0.09927	9.33854811		1 mil H20
4/6/09	Start - 8:03	A - 24507	3653.58	96	96.41		2180	376.446	5.7910							North Stack (console)
4/7/09	Fin - 8:53	B - 24494	Boiler 12				2180	387.763	5.6220	5.7065	6.0	5.3641	0.03228	8.83653323		1 mil H20
4/7/09	Start - 9:16	A - 45190	3816.48	95	101.67		2562	387.748	6.6074							North Stack (console)
4/8/09	Fin - 10:00	B - 45223	Boiler 12				2971	404.92	7.3373	6.9723	6.0	6.5540	0.04160	10.8997335		1 mil H20
4/8/09	Start - 10:17	A - 24559	3568.64	95	95.17		2202	331.57	6.6411							North Stack (console)
4/9/09	Fin - 9:05	B - 24515	Boiler 12				2254	340.668	6.6164	6.6288	6.0	6.2310	0.03702	10.3738335		1 mil H20
4/9/09	Start - 9:34	A - 45188	18128	95	485.56		12360	1724.817	7.1660							North Stack 1 mil
4/14/09	Fin - 5:05	B - 45228	Boiler 12				12530	1781.896	7.0318	7.0989	6.0	6.6730	0.20228	11.1581794		Partial H20 Run
4/14/09	Start - 6:41	A - 45224	26002.36	93	690.93		27339	2416.615	11.3129							North Stack
4/21/09	Fin - 6:41	B - 45155	Boiler 12				28160	2497.576	11.2749	11.2939	6.0	10.6163	0.45792	17.6106468		1 mil

APPENDIX D
Jamestown BPU Process Data

ECN #	REV.	DATE	REVISIONS	BY
	1	04/15/08	CHANGED FLANGE	SJS
	2	11/16/08	ADDITION OF GASKET	SJS

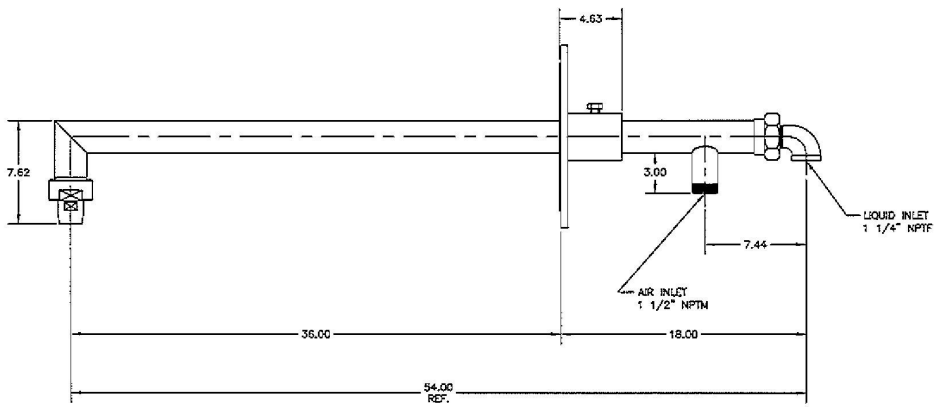

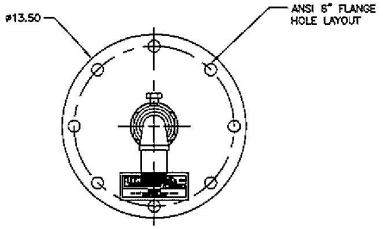

Approved by (please print): James K. Lake
Signature: [signature]
Company: CONSOL Energy Inc.
Date: 10-24-2008

In signing my approval to this drawing as a representative of the Company named above, I hereby certify that all of the specifications on this drawing are correct and complete, and that if the product is produced to these specifications it will be acceptable to the Company.

DWN. SJS 10-15-08	REFERENCE DESIGN	
ENG.	TITLE SUPERSONIC LANCE (171.071.12 NOZZLE)	
LECHLER, INC. ST. CHARLES, IL USA	SCALE 1/4"=1"	SHEET SIZE D
	DRAWING NO. AV-801.001.22.00.00	REV. 2

AvgTime	Flow mmscfh 1-hr P75	Flow, scfm	Heat Input 1-hr mmBtu/hr	Load stm 1-hr P75	Invalid	SourceUp
3/24/2009 0:00	3.738	62300	149.5	91	FALSE	TRUE
3/24/2009 1:00	3.742	62367	149.7	91	FALSE	TRUE
3/24/2009 2:00	4.306	71767	193.8	126	FALSE	TRUE
3/24/2009 3:00	5.1	85000	274.8	176	FALSE	TRUE
3/24/2009 4:00	5.063	84383	275.7	176	FALSE	TRUE
3/24/2009 5:00	5.048	84133	280.4	179	FALSE	TRUE
3/24/2009 6:00	5.03	83833	285	180	FALSE	TRUE
3/24/2009 7:00	5.112	85200	281.2	178	FALSE	TRUE
3/24/2009 8:00	5.037	83950	268.6	175	FALSE	TRUE
3/24/2009 9:00	5.124	85400	267.6	172	FALSE	TRUE
3/24/2009 10:00	5.218	86967	266.7	172	FALSE	TRUE
3/24/2009 11:00	5.111	85183	264.1	170	FALSE	TRUE
3/24/2009 12:00	3.999	66650	177.7	113	FALSE	TRUE
3/24/2009 13:00	3.468	57800	138.7	83	FALSE	TRUE
3/24/2009 14:00	3.356	55933	139.8	81	FALSE	TRUE
3/24/2009 15:00	3.305	55083	137.7	83	FALSE	TRUE
3/24/2009 16:00	3.286	54767	135.1	81	FALSE	TRUE
3/24/2009 17:00	3.285	54750	133.2	81	FALSE	TRUE
3/24/2009 18:00	3.33	55500	136.9	83	FALSE	TRUE
3/24/2009 19:00	3.308	55133	139.7	85	FALSE	TRUE
3/24/2009 20:00	3.284	54733	138.7	85	FALSE	TRUE
3/24/2009 21:00	3.302	55033	141.3	85	FALSE	TRUE
3/24/2009 22:00	3.29	54833	140.7	84	FALSE	TRUE
3/24/2009 23:00	3.343	55717	135.6	80	FALSE	TRUE

AvgTime	Flow mmscfh 1-hr P75	Flow scfm	Heat Input 1-hr, mmBtu/hr	Load stm 1-hr P75	Invalid	SourceUp
3/25/2009 0:00	3.289	54817	135.2	82	FALSE	TRUE
3/25/2009 1:00	3.322	55367	138.4	84	FALSE	TRUE
3/25/2009 2:00	3.341	55683	137.4	84	FALSE	TRUE
3/25/2009 3:00	3.312	55200	141.7	86	FALSE	TRUE
3/25/2009 4:00	3.312	55200	147.2	90	FALSE	TRUE
3/25/2009 5:00	3.319	55317	153	94	FALSE	TRUE
3/25/2009 6:00	3.349	55817	150.7	91	FALSE	TRUE
3/25/2009 7:00	3.386	56433	148.6	87	FALSE	TRUE
3/25/2009 8:00	3.34	55667	148.4	90	FALSE	TRUE
3/25/2009 9:00	3.369	56150	157.2	93	FALSE	TRUE
3/25/2009 10:00	3.398	56633	145.4	86	FALSE	TRUE
3/25/2009 11:00	3.416	56933	146.1	87	FALSE	TRUE
3/25/2009 12:00	3.734	62233	139	86	FALSE	TRUE
3/25/2009 13:00	3.701	61683	139.8	87	FALSE	TRUE
3/25/2009 14:00	3.711	61850	142.3	88	FALSE	TRUE
3/25/2009 15:00	3.766	62767	142.3	87	FALSE	TRUE
3/25/2009 16:00	3.752	62533	141.7	88	FALSE	TRUE
3/25/2009 17:00	3.761	62683	144.2	89	FALSE	TRUE
3/25/2009 18:00	3.817	63617	144.2	89	FALSE	TRUE
3/25/2009 19:00	3.805	63417	145.9	91	FALSE	TRUE
3/25/2009 20:00	3.798	63300	145.6	90	FALSE	TRUE
3/25/2009 21:00	3.801	63350	141.5	88	FALSE	TRUE
3/25/2009 22:00	3.804	63400	139.5	85	FALSE	TRUE
3/25/2009 23:00	3.861	64350	139.4	85	FALSE	TRUE

AvgTime	Flow mmscfh 1-hr P75	Flow, scfm	Heat Input 1-hr, mmBtu/hr	Load stm 1-hr P75	Invalid	SourceUp
3/26/2009 0:00	3.806	63433	141.7	88	FALSE	TRUE
3/26/2009 1:00	3.816	63600	142	89	FALSE	TRUE
3/26/2009 2:00	3.824	63733	146.6	91	FALSE	TRUE
3/26/2009 3:00	3.804	63400	145.8	91	FALSE	TRUE
3/26/2009 4:00	3.826	63767	148.8	92	FALSE	TRUE
3/26/2009 5:00	3.841	64017	149.4	93	FALSE	TRUE
3/26/2009 6:00	3.874	64567	150.7	93	FALSE	TRUE
3/26/2009 7:00	3.866	64433	146	89	FALSE	TRUE
3/26/2009 8:00	3.833	63883	149.1	92	FALSE	TRUE
3/26/2009 9:00	3.825	63750	148.8	92	FALSE	TRUE
3/26/2009 10:00	3.817	63617	142.1	88	FALSE	TRUE
3/26/2009 11:00	3.771	62850	142.5	89	FALSE	TRUE
3/26/2009 12:00	3.796	63267	143.4	91	FALSE	TRUE
3/26/2009 13:00	3.781	63017	147	92	FALSE	TRUE
3/26/2009 14:00	3.812	63533	150.4	96	FALSE	TRUE
3/26/2009 15:00	3.79	63167	151.6	96	FALSE	TRUE
3/26/2009 16:00	3.774	62900	148.9	93	FALSE	TRUE
3/26/2009 17:00	3.792	63200	147.5	91	FALSE	TRUE
3/26/2009 18:00	3.809	63483	143.9	90	FALSE	TRUE
3/26/2009 19:00	3.761	62683	144.2	91	FALSE	TRUE
3/26/2009 20:00	3.793	63217	147.5	91	FALSE	TRUE
3/26/2009 21:00	3.828	63800	148.9	92	FALSE	TRUE
3/26/2009 22:00	3.876	64600	146.4	88	FALSE	TRUE
3/26/2009 23:00	3.864	64400	143.8	88	FALSE	TRUE

AvgTime	Flow mmscfh 1-hr P75	Flow, scfm	Heat Input 1-hr, mmBtu/hr	Load stm 1-hr P75	Invalid	SourceUp
3/27/2009 0:00	3.831	63850	142.6	88	FALSE	TRUE
3/27/2009 1:00	3.832	63867	144.8	89	FALSE	TRUE
3/27/2009 2:00	4.063	67717	160.3	102	FALSE	TRUE
3/27/2009 3:00	5.167	86117	269.8	179	FALSE	TRUE
3/27/2009 4:00	5.171	86183	270	178	FALSE	TRUE
3/27/2009 5:00	5.208	86800	274.9	180	FALSE	TRUE
3/27/2009 6:00	5.241	87350	273.7	180	FALSE	TRUE
3/27/2009 7:00	5.26	87667	268.8	180	FALSE	TRUE
3/27/2009 8:00	5.113	85217	267	180	FALSE	TRUE
3/27/2009 9:00	5.023	83717	265.1	175	FALSE	TRUE
3/27/2009 10:00	4.641	77350	229.5	153	FALSE	TRUE
3/27/2009 11:00	3.713	61883	152.6	99	FALSE	TRUE
3/27/2009 12:00	4.134	68900	183.7	122	FALSE	TRUE
3/27/2009 13:00	5.001	83350	250.1	170	FALSE	TRUE
3/27/2009 14:00	4.858	80967	240.2	164	FALSE	TRUE
3/27/2009 15:00	4.939	82317	241.5	163	FALSE	TRUE
3/27/2009 16:00	4.879	81317	241.2	163	FALSE	TRUE
3/27/2009 17:00	4.893	81550	241.9	165	FALSE	TRUE
3/27/2009 18:00	4.986	83100	246.5	166	FALSE	TRUE
3/27/2009 19:00	4.934	82233	246.7	165	FALSE	TRUE
3/27/2009 20:00	4.941	82350	247.1	166	FALSE	TRUE
3/27/2009 21:00	4.983	83050	246.4	165	FALSE	TRUE
3/27/2009 22:00	5.022	83700	248.3	166	FALSE	TRUE
3/27/2009 23:00	5.051	84183	249.7	167	FALSE	TRUE

CONSOL ENERGY

Submitted by: Jim Locke
Date: 4/13/2009
General Description: Low Temperature Mercury Control Solid Samples

Analytical Number	Description		# mills/LTMC Condition	Total Moisture (Wt %)	As Determined Moisture (Wt %)	Dry Concentration (Wt %) Volatile Matter	Ash	Carbon	Hydrogen	Nitrogen	Chlorine	Sulfur	Dry BTU/lb Heating Value	Dry Concentration (ppm) Mercury
20091386	RAW COAL FEED 3/24/09	MILLS 7 & 8, 11AM	2 mills/Baseline	4.09	2.24	36.86	9.76	76.03	5.18	1.30	0.1647	1.76	13590	0.198
20091387	RAW COAL FEED 3/24/09	MILL #7, 2:30PM	1 mill/Baseline	5.71	2.55	36.04	10.84	75.08	5.07	1.27	0.1662	2.17	13429	0.228
20091388	RAW COAL FEED 3/26/09	MILL #7, 2 PM	1 mill/Baseline	1.98	2.02	37.33	9.86	75.79	5.04	1.34	0.1511	1.70	13577	0.208
20091389	PULVERIZED COAL 3/24/09	MILL #8, 11:30 AM	2 mills/Baseline		1.26	34.87	11.17	75.12	5.08	1.28	0.1529	1.92	13351	0.209
20091390	PULVERIZED COAL 3/24/09	MILL #7, 12:30 PM	2 mills/Baseline		1.32	34.57	11.50	73.80	4.86	1.24	0.1743	1.84	13278	0.201
20091391	PULVERIZED COAL 3/24/09	MILL #7, 3PM	1 mill/Baseline		1.19	35.68	10.60	75.23	5.15	1.29	0.1731	1.73	13500	0.163
20091393	PULVERIZED COAL 3/25/09	MILL #7, 8 AM	1 mill/Baseline		1.25	34.53	11.98	75.13	5.05	1.26	0.1580	1.94	13219	0.200
20091394	PULVERIZED COAL 3/26/09	MILL #7, 2:00 PM	1 mill/230F		1.39	35.40	11.69	74.86	4.94	1.26	0.1612	1.97	13211	0.382
20091395	PULVERIZED COAL 3/26/09	MILL #7, 4 PM	1 mill/230F		1.50	34.64	12.11	73.31	4.84	1.20	0.1340	1.98	13174	0.384
20091396	PULVERIZED COAL 3/26/09	MILL #7, 5:15 PM	1 mill/230F		1.32	34.95	11.49	73.80	4.84	1.23	0.1277	1.97	13234	0.379
20091397	PULVERIZED COAL 3/27/09	MILL #7, 10:00 AM	2 mills/230F		1.33	35.46	11.29	75.11	5.00	1.24	0.1753	1.90	13257	0.352
20091398	PULVERIZED COAL 3/27/09	MILL #8, 10:15 AM	2 mills/230F		1.22	35.30	11.06	75.84	4.97	1.32	0.1842	1.63	12869	0.317
20091399	PULVERIZED COAL 3/24/09	MILL #7, 2:15 PM	1 mill/Baseline		1.30	34.70	12.17	73.45	4.87	1.28	0.1869	2.03	13116	0.401
20091392	ESP ASH 3/25/09	ONE MILL, 8 AM	1 mill/Baseline		0.16		89.80	9.71			0.0050	0.61		2.76
20091400	ESP ASH 3/24/09	1:00 PM	2 mills/Baseline		0.16		89.99	10.20			0.0050	0.54		3.35
20091401	ESP ASH 3/26/09	2 PM	1 mill/230F		0.27		90.14	10.35			0.0050	0.62		2.24
20091402	ESP ASH 3/26/09	5 PM	1 mill/230F		0.35		90.16	9.60			0.0050	0.70		2.30
20091403	ESP ASH 3/27/09	11:45 AM	2 mills/230F		0.26		90.48	8.99			0.0040	0.69		3.32
20091404	ESP ASH 3/27/09	2 PM	2 mills/230F		0.29		89.24	10.11			0.0070	0.68		4.51

Analytical Number	Description		Major Ash Elements Wt % Dry Basis SiO2	Al2O3	TiO2	Fe2O3	CaO	MgO	Na2O	K2O	P2O5	SO3
20091386	RAW COAL FEED 3/24/09	MILLS 7 & 8, 11AM	48.62	25.91	1.14	18.93	1.25	0.69	0.30	1.75	0.59	1.00
20091387	RAW COAL FEED 3/24/09	MILL #7, 2:30PM	48.19	23.49	1.18	21.45	1.67	0.73	0.31	1.69	0.52	1.41
20091388	RAW COAL FEED 3/26/09	MILL #7, 2 PM	51.33	24.95	1.37	17.60	1.22	0.63	0.23	1.63	0.64	0.77
20091389	PULVERIZED COAL 3/24/09	MILL #8, 11:30 AM	50.55	24.06	1.22	18.03	1.53	0.79	0.29	1.88	0.53	1.10
20091390	PULVERIZED COAL 3/24/09	MILL #7, 12:30 PM	50.37	24.62	1.20	17.89	1.54	0.80	0.42	1.93	0.47	1.18
20091391	PULVERIZED COAL 3/24/09	MILL #7, 3PM	49.56	24.94	1.21	17.13	1.51	0.74	0.37	1.80	0.52	1.03
20091393	PULVERIZED COAL 3/25/09	MILL #7, 8 AM	51.29	24.58	1.19	17.83	1.56	0.83	0.34	1.95	0.51	1.16
20091394	PULVERIZED COAL 3/26/09	MILL #7, 2:00 PM	49.65	24.44	1.22	18.26	1.41	0.76	0.27	1.84	0.52	1.08
20091395	PULVERIZED COAL 3/26/09	MILL #7, 4 PM	50.49	24.78	1.21	18.39	1.42	0.80	0.27	1.91	0.52	1.21
20091396	PULVERIZED COAL 3/26/09	MILL #7, 5:15 PM	50.33	25.00	1.23	18.61	1.38	0.77	0.26	1.86	0.50	0.96
20091397	PULVERIZED COAL 3/27/09	MILL #7, 10:00 AM	50.94	24.83	1.24	17.69	1.35	0.77	0.25	1.87	0.52	0.89
20091398	PULVERIZED COAL 3/27/09	MILL #8, 10:15 AM	52.38	24.88	1.32	15.84	1.55	0.82	0.28	1.93	0.53	1.16
20091399	PULVERIZED COAL 3/24/09	MILL #7, 2:15 PM	49.95	24.48	1.25	18.27	1.34	0.80	0.25	1.91	0.47	1.00
20091392	PULVERIZED COAL 3/25/09	ONE MILL, 8 AM	47.36	25.99	1.43	10.05	1.73	0.83	0.41	2.10	0.62	1.42
20091400	ESP ASH 3/24/09	1:00 PM	47.17	25.89	1.39	10.64	1.65	0.79	0.43	2.07	0.64	1.17
20091401	ESP ASH 3/26/09	2 PM	46.80	26.12	1.43	9.62	1.72	0.82	0.40	2.07	0.61	1.38
20091402	ESP ASH 3/26/09	5 PM	47.06	26.47	1.42	9.31	1.67	0.77	0.35	1.99	0.67	1.49
20091403	ESP ASH 3/27/09	11:45 AM	47.58	26.67	1.45	10.21	1.74	0.84	0.35	2.13	0.70	1.56
20091404	ESP ASH 3/27/09	2 PM	47.30	26.11	1.42	10.08	1.69	0.83	0.33	2.12	0.71	1.47

AvgTime	Flow mmscfh 1-hr P75	Heat Input 1-hr P75	Load stm 1-hr P75	Invalid	SourceUp
4/2/2009 0:00	4.985	246.5	167	FALSE	TRUE
4/2/2009 1:00	5.015	248	168	FALSE	TRUE
4/2/2009 2:00	5.094	249	167	FALSE	TRUE
4/2/2009 3:00	5.056	252.8	170	FALSE	TRUE
4/2/2009 4:00	5.045	249.4	168	FALSE	TRUE
4/2/2009 5:00	5.052	252.6	170	FALSE	TRUE
4/2/2009 6:00	5.101	257.9	172	FALSE	TRUE
4/2/2009 7:00	5.078	251.1	170	FALSE	TRUE
4/2/2009 8:00	5	250	168	FALSE	TRUE
4/2/2009 9:00	4.941	241.6	164	FALSE	TRUE
4/2/2009 10:00	4.929	241	164	FALSE	TRUE
4/2/2009 11:00	4.862	237.7	162	FALSE	TRUE
4/2/2009 12:00	4.847	237	162	FALSE	TRUE
4/2/2009 13:00	4.803	234.8	162	FALSE	TRUE
4/2/2009 14:00	4.763	232.9	163	FALSE	TRUE
4/2/2009 15:00	4.768	227.8	161	FALSE	TRUE
4/2/2009 16:00	4.738	234.3	163	FALSE	TRUE
4/2/2009 17:00	4.745	234.6	164	FALSE	TRUE
4/2/2009 18:00	4.862	235	163	FALSE	TRUE
4/2/2009 19:00	4.831	236.2	164	FALSE	TRUE
4/2/2009 20:00	4.898	239.5	167	FALSE	TRUE
4/2/2009 21:00	4.896	239.4	168	FALSE	TRUE
4/2/2009 22:00	4.904	245.2	167	FALSE	TRUE
4/2/2009 23:00	4.959	242.4	164	FALSE	TRUE
4/3/2009 0:00	4.865	243.3	165	FALSE	TRUE
4/3/2009 1:00	4.871	243.6	166	FALSE	TRUE
4/3/2009 2:00	5.003	244.6	166	FALSE	TRUE
4/3/2009 3:00	4.922	243.4	165	FALSE	TRUE
4/3/2009 4:00	4.885	244.3	166	FALSE	TRUE
4/3/2009 5:00	4.881	246.8	168	FALSE	TRUE
4/3/2009 6:00	4.924	248.9	170	FALSE	TRUE
4/3/2009 7:00	5.074	253.7	171	FALSE	TRUE
4/3/2009 8:00	5.113	250	171	FALSE	TRUE
4/3/2009 9:00	3.885	159.7	100	FALSE	TRUE
4/3/2009 10:00	3.616	150.7	99	FALSE	TRUE
4/3/2009 11:00	3.595	151.8	98	FALSE	TRUE

Jamestown BPU
Unit 12
ESP Data

Date	Time	Device	Primary Volts	Secondary Kva	Sparks	LTMC / Plant Status
Mar 24, 2009	11:10	12A	327.7	40.1	2	Baseline - 2 mills
Mar 24, 2009	11:10	12B	313.6	36.9	0	
Mar 24, 2009	11:10	12C	270.0	34.2	0	
Day Average			303.8	37.1	0.7	
Mar 24, 2009	14:12	12A	314.1	38.0	1	Baseline - 1 mill
Mar 24, 2009	14:12	12B	310.9	36.4	0	
Mar 24, 2009	14:12	12C	271.7	34.2	0	
Day Average			303.8	37.1	0.6667	
Mar 25, 2009	7:26	12A	315.4	38.1	1	No Test - 1 mill
Mar 25, 2009	7:26	12B	305.8	35.7	0	
Mar 25, 2009	7:26	12C	267.4	33.4	0	
Day Average			296.2	35.7	0.3	
Mar 26, 2009	14:05	12A	311.0	37.3	0	230 - 1 mill
Mar 26, 2009	14:05	12B	300.8	35.0	0	
Mar 26, 2009	14:05	12C	259.5	32.2	0	
Day Average			290.4	34.8	0.0	
Mar 26, 2009	15:26	12A	304.5	36.4	0	
Mar 26, 2009	15:26	12B	300.8	35.0	0	
Mar 26, 2009	15:26	12C	259.4	32.0	0	
Day Average			288.2	34.5	0.0	
Mar 27, 2009	7:24	12A	315.9	38.2	2	
Mar 27, 2009	7:24	12B	297.8	34.8	0	
Mar 27, 2009	7:24	12C	258.5	32.1	0	
Day Average			290.7	35.0	0.7	
Mar 27, 2009	8:51	12A	343.9	40.1	0	230 - 2 mills
Mar 27, 2009	8:51	12B	302.5	35.3	0	
Mar 27, 2009	8:51	12C	260.2	32.3	0	
Day Average			302.2	35.9	0.0	

No ESP data for this time period 230 - 2 mills

Jamestown BPU
Unit 12
ESP Data

Date	Time	Device	Primary Volts	Secondary Kva	Sparks	LTMC / Plant Status
Mar 27, 2009	14:00	12A	359.3	41.6	0	
Mar 27, 2009	14:00	12B	303.0	35.4	0	
Mar 27, 2009	14:00	12C	257.0	31.9	0	
Mar 27, 2009	15:00	12A	350.8	40.4	0	
Mar 27, 2009	15:00	12B	317.8	36.4	0	
Mar 27, 2009	15:00	12C	290.8	34.5	0	
Mar 27, 2009	16:00	12A	353.2	40.7	0	
Mar 27, 2009	16:00	12B	317.9	36.4	0	
Mar 27, 2009	16:00	12C	292.9	34.7	0	
Mar 27, 2009	17:00	12A	349.9	48.3	0	
Mar 27, 2009	17:00	12B	316.5	36.2	0	
Mar 27, 2009	17:00	12C	291.1	34.6	0	
Mar 27, 2009	18:00	12A	349.9	40.4	0	
Mar 27, 2009	18:00	12B	315.2	36.0	0	
Mar 27, 2009	18:00	12C	290.3	34.5	0	
Mar 27, 2889	19:00	12A	350.7	40.4	0	
Mar 27, 2089	19:00	12B	314.3	35.9	0	
Mar 27, 2009	19:00	12C	298.2	34.5	0	
Mar 27, 2809	20:00	12A	358.9	40.4	0	
Mar 27, 2009	20:00	12B	312.3	35.8	0	
Mar 27, 2089	20:00	12C	298.9	34.5	0	
Mar 27, 2009	21:00	12A	358.4	40.3	0	
Mar 27, 2009	21:00	12B	311.3	35.7	0	
Mar 27, 2009	21:00	12C	298.9	34.5	0	
Mar 27, 2809	22:00	12A	348.5	40.1	0	
Mar 27, 2009	22:00	12B	311.4	35.6	0	
Mar 27, 2009	22:00	12C	289.0	34.3	0	
Mar 27, 2889	23:00	12A	349.8	40.3	0	
Mar 27, 2009	23:00	12B	310.8	35.4	1	
Mar 27, 2089	23:00	12C	288.6	34.2	0	
Day Average			318.5	37.1	0.0	

Jamestown BPU
Unit 12
ESP Data

Date	Time	Device	Primary Volts	Secondary Kva	Sparks	LTMC / Plant Status
Mar 28, 2009	0:00	12A	352.6	40.6	0	
Mar 28, 2009	0:00	12B	307.7	35.2	2	
Mar 28, 2089	0:00	12C	288.3	34.1	0	
Mar 28, 2009	1:00	12A	350.8	40.4	0	
Mar 28, 2009	1:00	12B	303.9	35.0	3	
Mar 28, 2009	1:00	12C	286.8	34.1	0	
Mar 28, 2089	2:00	12A	349.6	40.3	0	
Mar 28, 2009	2:00	12B	382.4	34.7	5	
Mar 28, 2009	2:00	12C	286.1	34.0	0	
Mar 28, 2089	3:00	12A	351.4	40.5	0	
Mar 28, 2009	3:00	12B	305.1	34.8	2	
Mar 28, 2889	3:00	12C	285.7	33.9	0	
Mar 28, 2089	4:00	12A	355.4	41.0	0	
Mar 28, 2009	4:00	12B	304.8	34.8	0	
Mar 28, 2009	4:00	12C	285.1	33.8	0	
Mar 28, 2889	5:00	12A	359.2	41.5	0	
Mar 28, 2009	5:00	12B	304.9	34.9	0	
Mar 28, 2889	5:00	12C	285.8	33.7	0	
Mar 28, 2009	6:00	12A	358.2	41.4	0	
Mar 28, 2009	6:00	12B	388.8	35.2	0	
Mar 28, 2009	6:00	12C	285.0	33.7	0	
Mar 28, 2009	7:00	12A	355.8	41.1	0	
Mar 28, 2009	7:00	12B	388.9	35.2	1	
Mar 28, 2009	7:00	12C	285.3	33.8	0	
Mar 28, 2809	8:00	12A	354.5	41.0	0	
Mar 28, 2009	8:00	12B	318.4	35.4	0	
Mar 28, 2809	8:00	12C	285.0	33.7	0	
Mar 28, 2009	9:00	12A	350.3	40.5	0	
Mar 28, 2009	9:00	12B	389.7	35.3	0	
Mar 28, 2089	9:00	12C	285.0	33.7	0	
Mar 28, 2009	10:00	12A	351.5	48.6	0	
Mar 28, 2009	10:00	12B	309.5	35.3	0	
Mar 28, 2009	10:00	12C	285.5	33.8	0	
Mar 28, 2009	11:00	12A	354.4	40.9	0	
Mar 28, 2009	11:00	12B	308.7	35.3	0	
Mar 28, 2009	11:00	12C	286.1	33.9	0	

Jamestown BPU
Unit 12
ESP Data

Date	Time	Device	Primary Volts	Secondary Kva	Sparks	LTMC / Plant Status
Mar 28, 2009	12:00	12A	354.9	40.9	0	
Mar 28, 2009	12:00	12B	307.9	35.2	0	
Mar 28, 2009	12:00	12C	286.2	33.9	0	
Mar 28, 2009	13:00	12A	354.3	40.9	0	
Mar 28, 2009	13:00	12B	307.0	35.2	0	
Mar 28, 2009	13:00	12C	286.5	33.9	0	
Mar 28, 2009	14:00	12A	351.9	40.6	0	
Mar 28, 2009	14:00	12B	307.5	35.2	0	
Mar 28, 2809	14:00	12C	285.3	33.8	0	
Mar 28, 2009	15:00	12A	350.1	40.4	0	
Mar 28, 2009	15:00	12B	307.4	35.1	0	
Mar 28, 2009	15:00	12C	285.0	33.6	0	
Mar 28, 2009	16:00	12A	355.6	41.1	0	
Mar 28, 2009	16:00	12B	307.7	35.1	0	
Mar 28, 2009	16:00	12C	285.0	33.6	0	
Mar 28, 2009	17:00	12A	352.2	48.7	0	
Mar 28, 2009	17:00	12B	306.1	34.9	0	
Mar 28, 2809	17:00	12C	284.6	33.6	0	
Mar 28, 2809	18:00	12A	349.5	48.2	0	
Mar 28, 2009	18:00	12B	304.7	34.8	0	
Mar 28, 2009	18:00	12C	284.8	33.6	0	
Mar 28, 2009	19:00	12A	348.0	40.1	0	
Mar 28, 2009	19:00	12B	305.1	34.8	0	
Mar 28, 2009	19:00	12C	284.2	33.6	0	
Mar 28, 2009	20:00	12A	347.4	40.8	0	
Mar 28, 2009	20:00	12B	304.0	34.7	0	
Mar 28, 2009	20:00	12C	284.7	33.6	0	
Mar 28, 2809	21:00	12A	345.4	39.6	0	
Mar 28, 2009	21:00	12B	302.9	34.7	0	
Mar 28, 2009	21:00	12C	284.9	33.6	0	
Mar 28, 2009	22:00	12A	346.2	39.8	0	
Mar 28, 2009	22:00	12B	383.7	34.7	0	
Mar 28, 2809	22:00	12C	284.6	33.5	0	
Mar 28, 2009	23:00	12A	354.0	40.8	0	
Mar 28, 2009	23:00	12B	303.4	34.7	0	
Mar 28, 2009	23:00	12C	284.7	33.5	0	
	Day Average		320.3	36.8	0.2	

Jamestown BPU
Unit 12
ESP Data

Date	Time	Device	Primary Volts	Secondary Kva	Sparks	LTMC / Plant Status
Mar 29, 2009	0:00	12A	358.0	41.3	0	
Mar 29, 2009	0:00	12B	303.1	34.6	0	
Mar 29, 2009	0:00	12C	284.0	33.4	0	
Mar 29, 2009	1:00	12A	357.3	41.3	0	
Mar 29, 2009	1:00	12B	303.2	34.6	0	
Mar 29, 2009	1:00	12C	284.0	33.4	0	
Mar 29, 2009	2:00	12A	356.5	41.2	0	
Mar 29, 2009	2:00	12B	302.5	34.7	0	
Mar 29, 2009	2:00	12C	284.0	33.4	0	
Mar 29, 2009	3:00	12A	349.9	40.3	0	
Mar 29, 2089	3:00	12B	382.8	34.6	0	
Mar 29, 2089	3:00	12C	283.9	33.3	0	
Mar 29, 2009	4:00	12A	351.3	48.5	0	
Mar 29, 2009	4:00	12B	383.8	34.7	0	
Mar 29, 2809	4:00	12C	283.6	33.3	0	
Mar 29, 2009	5:00	12A	352.8	40.7	0	
Mar 29, 2809	5:00	12B	383.4	34.7	0	
Mar 29, 2809	5:00	12C	283.1	33.2	0	
Mar 29, 2809	6:00	12A	354.0	40.9	0	
Mar 29, 2809	6:00	12B	303.7	34.7	0	
Mar 29, 2889	6:00	12C	281.3	33.1	0	
Mar 29, 2009	7:00	12A	366.2	42.7	1	
Mar 29, 2009	7:00	12B	306.1	34.9	3	
Mar 29, 2089	7:00	12C	282.1	33.2	0	
Mar 29, 2009	8:00	12A	363.8	42.4	1	
Mar 29, 2009	8:00	12B	313.4	35.8	2	
Mar 29, 2009	8:00	12C	283.8	33.4	0	
Mar 29, 2009	9:00	12A	355.0	41.1	0	
Mar 29, 2009	9:00	12B	315.6	36.1	0	
Mar 29, 2009	9:00	12C	284.2	33.5	0	
Mar 29, 2009	10:00	12A	357.6	41.5	0	
Mar 29, 2009	10:00	12B	316.5	36.2	0	
Mar 29, 2009	10:00	12C	284.5	33.6	0	
Mar 29, 2009	11:00	12A	368.2	41.9	0	
Mar 29, 2009	11:00	12B	316.9	36.2	0	
Mar 29, 2009	11:00	12C	284.7	33.6	0	

Jamestown BPU
Unit 12
ESP Data

Date	Time	Device	Primary Volts	Secondary Kva	Sparks	LTMC / Plant Status
Mar 29, 2009	12:00	12A	359.0	41.6	0	
Mar 29, 2009	12:00	12B	316.0	36.1	0	
Mar 29, 2809	12:00	12C	285.0	33.6	0	
Mar 29, 2809	13:00	12A	356.1	41.2	0	
Mar 29, 2809	13:00	12B	315.3	36.0	0	
Mar 29, 2809	13:00	12C	285.0	33.6	0	
Mar 29, 2809	14:00	12A	356.6	41.3	0	
Mar 29, 2009	14:00	12B	314.8	36.8	0	
Mar 29, 2009	14:00	12C	285.0	33.6	0	
Mar 29, 2009	15:00	12A	356.9	41.3	0	
Mar 29, 2009	15:00	12B	314.5	35.9	0	
Mar 29, 2009	15:00	12C	285.0	33.6	0	
Mar 29, 2009	16:00	12A	359.4	41.7	0	
Mar 29, 2009	16:00	12B	315.2	36.0	1	
Mar 29, 2009	16:00	12C	285.0	33.6	0	
Mar 29, 2009	17:00	12A	357.3	41.4	0	
Mar 29, 2009	17:00	12B	314.2	35.9	0	
Mar 29, 2009	17:00	12C	285.0	33.6	0	
Mar 29, 2809	18:00	12A	358.2	41.5	0	
Mar 29, 2009	18:00	12B	313.9	35.8	0	
Mar 29, 2009	18:00	12C	285.0	33.6	0	
Mar 29, 2009	19:00	12A	358.5	41.6	0	
Mar 29, 2009	19:00	12B	313.9	35.8	0	
Mar 29, 2009	19:00	12C	284.8	33.6	0	
Mar 29, 2009	20:00	12A	356.1	41.2	0	
Mar 29, 2009	20:00	12B	313.5	35.8	0	
Mar 29, 2009	20:00	12C	284.7	33.6	0	
Mar 29, 2009	21:00	12A	355.7	41.2	0	
Mar 29, 2009	21:00	12B	312.9	35.8	0	
Mar 29, 2089	21:00	12C	285.0	33.6	0	
Mar 29, 2009	22:00	12A	356.1	41.3	0	
Mar 29, 2009	22:00	12B	313.8	35.8	0	
Mar 29, 2089	22:00	12C	284.7	33.6	0	
Mar 29, 2089	23:00	12A	361.6	42.0	0	
Mar 29, 2009	23:00	12B	313.6	35.8	1	
Mar 29, 2009	23:00	12C	285.8	33.6	0	
	Day Average		320.9	36.9	0.1	

Jamestown BPU
Unit 12
ESP Data

Date	Time	Device	Primary Volts	Secondary Kva	Sparks	LTMC / Plant Status
Mar 30, 2009	0:00	12A	367.1	42.8	0	
Mar 30, 2009	0:00	12B	314.4	35.9	1	
Mar 30, 2089	0:00	12C	284.8	33.6	0	
Mar 30, 2009	1:00	12A	364.6	42.5	0	
Mar 30, 2009	1:00	12B	314.7	36.0	0	
Mar 30, 2009	1:00	12C	285.0	33.6	0	
Mar 30, 2009	2:00	12A	363.4	42.3	0	
Mar 30, 2009	2:00	12B	315.4	36.1	0	
Mar 30, 2009	2:00	12C	285.0	33.6	0	
Mar 30, 2089	3:00	12A	357.3	41.4	0	
Mar 30, 2009	3:00	12C	284.6	33.6	0	
Mar 30, 2009	3:00	12B	315.3	36.1	0	
Mar 30, 2009	4:00	12A	355.0	41.1	0	
Mar 30, 2009	4:00	12B	315.9	36.1	1	
Mar 30, 2009	4:00	12C	284.8	33.6	0	
Mar 30, 2009	5:00	12A	353.2	40.9	0	
Mar 30, 2009	5:00	12B	314.3	36.1	1	
Mar 30, 2009	5:00	12C	284.7	33.6	0	
Mar 30, 2009	6:00	12A	353.0	40.8	0	
Mar 30, 2009	6:00	12B	314.3	36.0	1	
Mar 30, 2009	6:00	12C	285.0	33.7	0	
Mar 30, 2009	7:00	12A	356.7	41.4	0	
Mar 30, 2009	7:00	12B	315.7	36.1	1	
Mar 30, 2009	7:00	12C	285.1	33.7	0	
Mar 30, 2009	8:00	12A	362.4	42.2	0	
Mar 30, 2009	8:00	12B	315.6	36.1	2	
Mar 30, 2009	8:00	12C	285.6	33.8	0	
Mar 30, 2009	9:00	12A	360.0	41.8	0	
Mar 30, 2009	9:00	12B	316.2	36.2	0	
Mar 30, 2009	9:00	12C	285.5	33.8	0	
Mar 30, 2009	10:00	12A	359.6	41.8	0	
Mar 30, 2009	10:00	12B	316.6	36.3	0	
Mar 30, 2009	10:00	12C	285.2	33.8	0	
Mar 30, 2009	11:00	12A	357.7	41.5	0	
Mar 30, 2009	11:00	12B	316.5	36.3	0	
Mar 30, 2009	11:00	12C	285.8	33.9	0	

Jamestown BPU
Unit 12
ESP Data

Date	Time	Device	Primary Volts	Secondary Kva	Sparks	LTMC / Plant Status
Mar 30, 2009	12:00	12A	357.2	41.4	0	
Mar 30, 2009	12:00	12B	316.6	36.3	0	
Mar 30, 2009	12:00	12C	285.8	33.8	0	
Mar 30, 2009	13:00	12A	351.3	40.6	0	
Mar 30, 2009	13:00	12B	315.4	36.1	0	
Mar 30, 2009	13:00	12C	285.4	33.8	0	
Mar 30, 2009	14:00	12A	355.2	41.2	0	
Mar 30, 2009	14:00	12B	316.2	36.2	0	
Mar 30, 2009	14:00	12C	285.3	33.8	0	
Mar 30, 2009	15:00	12A	363.6	42.3	0	
Mar 30, 2009	15:00	12B	316.3	36.2	1	
Mar 30, 2009	15:00	12C	285.1	33.8	0	
Mar 30, 2009	16:00	12A	373.2	43.8	1	
Mar 30, 2009	16:00	12B	320.8	36.7	2	
Mar 30, 2009	16:00	12C	285.0	33.7	0	
Mar 30, 2009	17:00	12A	362.4	42.2	0	
Mar 30, 2809	17:00	12B	323.3	37.0	0	
Mar 30, 2009	17:00	12C	285.9	33.9	0	
Mar 30, 2009	18:00	12A	358.8	41.7	0	
Mar 30, 2009	18:00	12B	323.1	36.9	0	
Mar 30, 2009	18:00	12C	286.0	34.0	0	
Mar 30, 2009	19:00	12A	356.2	41.4	0	
Mar 30, 2009	19:00	12B	322.6	36.9	0	
Mar 30, 2009	19:00	12C	285.8	33.9	0	
Mar 30, 2009	20:00	12A	356.3	41.3	0	
Mar 30, 2009	20:00	12B	321.9	36.9	0	
Mar 30, 2009	20:00	12C	286.1	34.0	0	
Mar 30, 2009	21:00	12A	354.6	41.1	0	
Mar 30, 2009	21:00	12B	321.3	36.8	0	
Mar 30, 2009	21:00	12C	286.0	34.0	0	
Mar 30, 2009	22:00	12A	356.2	41.3	0	
Mar 30, 2009	22:00	12B	320.6	36.8	0	
Mar 30, 2009	22:00	12C	286.5	34.1	0	
Mar 30, 2009	23:00	12A	352.9	40.9	0	
Mar 30, 2009	23:00	12B	305.4	35.0	0	
Mar 30, 2009	23:00	12C	280.5	33.0	0	
Day Average			320.3	37.2	0.2	

Jamestown BPU
Unit 12
ESP Data

Date	Time	Device	Primary Volts	Secondary Kva	Sparks	LTMC / Plant Status
Mar 31, 2009	0:00	12A	352.9	40.8	0	
Mar 31, 2009	0:00	12B	305.0	34.9	0	
Mar 31, 2009	0:00	12C	280.5	33.0	0	
Mar 31, 2009	1:00	12A	353.7	41.0	0	
Mar 31, 2009	1:00	12B	305.8	35.0	0	
Mar 31, 2009	1:00	12C	280.8	33.0	0	
Mar 31, 2009	2:00	12A	353.9	40.9	0	
Mar 31, 2009	2:00	12B	304.9	35.0	0	
Mar 31, 2009	2:00	12C	282.9	33.1	0	
Mar 31, 2009	3:00	12A	355.3	41.2	0	
Mar 31, 2009	3:00	12B	305.7	35.0	0	
Mar 31, 2009	3:00	12C	281.7	33.0	0	
Mar 31, 2009	4:00	12A	355.4	41.2	0	
Mar 31, 2009	4:00	12B	305.4	35.0	0	
Mar 31, 2009	4:00	12C	282.3	33.1	0	
Mar 31, 2009	5:00	12A	354.8	41.1	0	
Mar 31, 2009	5:00	12B	306.3	35.1	0	
Mar 31, 2009	5:00	12C	282.3	33.1	0	
Mar 31, 2009	6:00	12A	359.3	41.7	1	
Mar 31, 2009	6:00	12B	306.4	35.2	0	
Mar 31, 2009	6:00	12C	282.7	33.2	0	
Mar 31, 2009	9:25	12A	361.7	42.1	0	
Mar 31, 2009	9:25	12B	320.6	36.7	0	
Mar 31, 2009	9:25	12C	286.0	33.9	0	
Mar 31, 2009	10:25	12A	353.6	40.9	0	
Mar 31, 2009	10:25	12B	307.9	35.3	0	
Mar 31, 2009	10:25	12C	282.8	33.3	0	
Mar 31, 2009	11:25	12A	353.0	40.8	0	
Mar 31, 2009	11:25	12B	316.8	36.2	0	
Mar 31, 2009	11:25	12C	286.5	33.9	0	

Jamestown BPU
Unit 12
ESP Data

Date	Time	Device	Primary Volts	Secondary Kva	Sparks	LTMC / Plant Status
Mar 31, 2009	12:25	12A	352.8	40.8	0	
Mar 31, 2009	12:25	12B	318.7	36.4	0	
Mar 31, 2009	12:25	12C	286.3	33.9	0	
Mar 31, 2009	13:25	12A	353.3	40.9	0	
Mar 31, 2009	13:25	12B	318.4	36.4	0	
Mar 31, 2009	13:25	12C	285.8	33.8	0	
Mar 31, 2009	14:25	12A	350.5	40.5	0	
Mar 31, 2009	14:25	12B	308.9	35.3	0	
Mar 31, 2009	14:25	12C	282.5	33.3	0	
Mar 31, 2009	15:25	12A	353.6	40.8	0	
Mar 31, 2009	15:25	12B	315.7	36.1	0	
Mar 31, 2009	15:25	12C	287.1	33.8	0	
Mar 31, 2009	16:25	12A	355.7	41.1	0	
Mar 31, 2009	16:25	12B	316.6	36.3	0	
Mar 31, 2009	16:25	12C	286.3	33.8	0	
Mar 31, 2009	17:25	12A	355.3	41.1	0	
Mar 31, 2009	17:25	12B	316.2	36.2	0	
Mar 31, 2009	17:25	12C	285.4	33.7	0	
Mar 31, 2009	18:25	12A	353.7	40.9	0	
Mar 31, 2009	18:25	12B	315.4	36.2	0	
Mar 31, 2009	18:25	12C	285.0	33.6	0	
Mar 31, 2009	19:25	12A	352.8	40.7	0	
Mar 31, 2009	19:25	12B	314.2	35.9	0	
Mar 31, 2009	19:25	12C	285.0	33.7	0	
Mar 31, 2009	20:25	12A	352.1	48.6	0	
Mar 31, 2009	20:25	12B	313.8	35.8	0	
Mar 31, 2009	20:25	12C	285.8	33.6	0	
Mar 31, 2009	21:25	12A	352.2	40.6	0	
Mar 31, 2009	21:25	12B	312.8	35.8	0	
Mar r31, 2009	21:25	12C	285.0	33.6	0	
Mar 31, 2009	22:25	12A	352.9	40.7	0	
Mar 31, 2009	22:25	12B	311.7	35.7	0	
Mar 31, 2009	22:25	12C	284.8	33.6	0	
Mar 31, 2009	23:25	12A	354.4	41.0	0	
Mar 31, 2009	23:25	12B	310.2	35.5	1	
Mar 31, 2009	23:25	12C	284.5	33.5	0	
	Day Average		316.7	36.8	0.0	

Jamestown BPU
Unit 12
ESP Data

Date	Time	Device	Primary Volts	Secondary Kva	Sparks	LTMC / Plant Status
Apr 1, 2009	0:25	12A	354.2	41.0	0	
Apr 1, 2009	0:25	12B	310.2	35.4	0	
Apr 1, 2009	0:25	12C	283.4	33.4	0	
Apr 1, 2009	1:25	12A	354.2	41.0	0	
Apr 1, 2009	1:25	12B	309.8	35.3	0	
Apr 1, 2009	1:25	12C	282.6	33.3	0	
Apr 1, 2009	2:25	12A	352.9	40.8	0	
Apr 1, 2089	2:25	12B	308.9	35.2	0	
Apr 1, 2889	2:25	12C	283.0	33.3	0	
Apr 1, 2009	3:25	12A	351.3	40.5	0	
Apr 1, 2009	3:25	12B	308.5	35.2	0	
Apr 1, 2009	3:25	12C	282.7	33.3	0	
Apr 1, 2009	4:25	12A	351.7	40.6	0	
Apr 1, 2009	4:25	12B	308.1	35.2	0	
Apr 1, 2009	4:25	12C	281.5	33.2	0	
Apr 1, 2009	5:25	12A	353.3	40.8	0	
Apr 1, 2009	5:25	12B	307.6	35.2	0	
Apr 1, 2009	5:25	12C	282.5	33.2	0	
Apr 1, 2009	6:25	12A	357.1	41.3	0	
Apr 1, 2009	6:25	12B	308.1	35.2	0	
Apr 1, 2009	6:25	12C	281.9	33.2	0	
Apr 1, 2009	7:38	12A	373.5	43.9	1	
Apr 1, 2009	7:38	12B	322.1	36.7	1	
Apr 1, 2009	7:38	12C	283.7	33.4	0	
Apr 1, 2009	8:38	12A	363.7	42.5	0	
Apr 1, 2009	8:38	12B	325.3	37.1	0	
Apr 1, 2009	8:38	12C	284.0	33.5	0	
Apr 1, 2009	9:38	12A	359.9	41.9	0	
Apr 1, 2009	9:38	12B	324.7	37.1	0	
Apr 1, 2009	9:38	12C	284.0	33.5	0	
Apr 1, 2009	10:38	12A	361.8	42.1	0	
Apr 1, 2009	10:38	12B	324.6	37.1	0	
Apr 1, 2009	10:38	12C	284.3	33.6	0	
Apr 1, 2009	11:38	12A	358.1	41.6	0	
Apr 1, 2009	11:38	12B	322.5	36.9	0	
Apr 1, 2009	11:38	12C	285.0	33.6	0	

Jamestown BPU
Unit 12
ESP Data

Date	Time	Device	Primary Volts	Secondary Kva	Sparks	LTMC / Plant Status
Apr 1, 2009	12:38	12A	355.7	41.2	0	
Apr 1, 2009	12:38	12B	322.3	36.9	0	
Apr 1, 2009	12:38	12C	285.0	33.6	0	
Apr 1, 2009	13:38	12A	355.1	41.1	0	
Apr 1, 2009	13:38	12B	321.6	36.8	0	
Apr 1, 2009	13:38	12C	285.0	33.6	0	
Apr 1, 2009	14:38	12A	355.1	41.0	0	
Apr 1, 2009	14:38	12B	320.1	36.7	0	
Apr 1, 2009	14:38	12C	285.0	33.7	0	
Apr 1, 2009	15:38	12A	355.9	41.2	0	
Apr 1, 2009	15:38	12B	320.9	36.7	1	
Apr 1, 2009	15:38	12C	284.7	33.6	0	
Apr 1, 2009	16:38	12A	356.1	41.3	0	
Apr 1, 2009	16:38	12B	319.7	36.6	0	
Apr 1, 2009	16:38	12C	284.5	33.5	0	
Apr 1, 2009	17:38	12A	355.4	41.1	0	
Apr 1, 2009	17:38	12B	318.9	36.5	0	
Apr 1, 2009	17:38	12C	285.0	33.6	0	
Apr 1, 2009	18:38	12A	355.3	41.1	0	
Apr 1, 2009	18:38	12B	318.5	36.4	0	
Apr 1, 2009	18:38	12C	285.0	33.6	0	
Apr 1, 2009	19:38	12A	359.0	41.7	0	
Apr 1, 2009	19:38	12B	319.2	36.5	0	
Apr 1, 2009	19:38	12C	284.9	33.6	0	
Apr 1, 2009	20:38	12A	361.7	42.1	0	
Apr 1, 2009	20:38	12B	318.8	36.5	0	
Apr 1, 2009	20:38	12C	285.0	33.6	0	
Apr 1, 2009	21:38	12A	362.3	42.2	0	
Apr 1, 2009	21:38	12B	319.0	36.5	0	
Apr 1, 2009	21:38	12C	284.5	33.5	0	
Apr 1, 2009	22:38	12A	358.7	41.6	0	
Apr 1, 2009	22:38	12B	318.0	36.4	0	
Apr 1, 2009	22:38	12C	284.7	33.6	0	
Apr 1, 2009	23:38	12A	361.6	42.0	0	
Apr 1, 2009	23:38	12B	318.0	36.4	0	
Apr 1, 2009	23:38	12C	284.8	33.6	0	
	Day Average		319.7	37.1	0.0	

Jamestown BPU
Unit 12
ESP Data

Date	Time	Device	Primary Volts	Secondary Kva	Sparks	LTMC / Plant Status
Apr 2, 2009	0:38	12A	360.2	41.8	0	
Apr 2, 2009	0:38	12B	317.6	36.3	0	
Apr 2, 2009	0:38	12C	284.4	33.6	0	
Apr 2, 2009	1:38	12A	360.1	41.8	0	
Apr 2, 2009	1:38	12B	317.5	36.3	0	
Apr 2, 2009	1:38	12C	284.4	33.5	0	
Apr 2, 2009	2:38	12A	360.7	41.9	0	
Apr 2, 2009	2:38	12B	317.2	36.3	0	
Apr 2, 2009	2:38	12C	284.8	33.5	0	
Apr 2, 2009	3:38	12A	362.5	42.2	0	
Apr 2, 2009	3:38	12B	317.3	36.3	0	
Apr 2, 2009	3:38	12C	284.3	33.5	0	
Apr 2, 2009	4:38	12A	365.3	42.6	0	
Apr 2, 2009	4:38	12B	317.2	36.3	0	
Apr 2, 2009	4:38	12C	284.4	33.5	8	
Apr 2, 2009	5:38	12A	369.8	43.2	0	
Apr 2, 2009	5:38	12B	318.4	36.4	0	
Apr 2, 2009	5:38	12C	284.2	33.5	0	
Apr 2, 2009	6:38	12A	371.0	43.6	1	
Apr 2, 2009	6:38	12B	319.1	36.6	0	
Apr 2, 2009	6:38	12C	284.6	33.5	0	
Apr 2, 2009	7:38	12A	373.7	43.9	2	
Apr 2, 2009	7:38	12B	323.7	37.0	2	
Apr 2, 2009	7:38	12C	284.1	33.5	0	
Apr 2, 2009	9:30	12A	369.2	43.2	0	
Apr 2, 2009	9:30	12B	329.2	37.7	0	
Apr 2, 2009	9:30	12C	285.0	33.6	0	
Apr 2, 2009	10:30	12A	361.2	42.1	0	
Apr 2, 2009	10:30	12B	328.8	37.6	0	
Apr 2, 2009	10:30	12C	285.0	33.7	0	
Apr 2, 2009	11:30	12A	363.4	42.3	0	
Apr 2, 2009	11:30	12B	328.0	37.5	0	
Apr 2, 2009	11:30	12C	285.8	33.8	0	

Jamestown BPU
Unit 12
ESP Data

Date	Time	Device	Primary Volts	Secondary Kva	Sparks	LTMC / Plant Status
Apr 2, 2009	12:30	12A	358.6	41.7	0	
Apr 2, 2009	12:30	12B	327.0	37.4	0	
Apr 2, 2009	12:30	12C	285.2	33.7	0	
Apr 2, 2009	13:30	12A	358.1	41.6	0	
Apr 2, 2009	13:30	12B	326.6	37.4	0	
Apr 2, 2009	13:30	12C	285.9	33.9	0	
Apr 2, 2009	14:30	12A	358.6	41.6	0	
Apr 2, 2009	14:30	12B	325.5	37.3	0	
Apr 2, 2009	14:30	12C	286.7	34.0	0	
Apr 2, 2009	15:30	12A	361.3	42.0	0	
Apr 2,. 2009	15:30	12B	324.4	37.1	0	
Apr 2, 2009	15:30	12C	286.3	33.9	0	
Apr 2, 2009	16:30	12A	359.2	41.8	0	
Apr 2, 2009	16:30	12B	324.3	37.1	0	
Apr 2, 2009	16:30	12C	285.0	33.7	0	
Apr 2, 2009	17:30	12A	359.2	41.7	0	
Apr 2, 2009	17:30	12B	322.1	36.9	0	
Apr 2, 2009	17:30	12C	285.0	33.7	0	
Apr 2, 2009	18:30	12A	359.0	41.7	0	
Apr 2, 2009	18:30	12B	320.9	36.8	0	
Apr 2, 2009	18:30	12C	285.0	33.7	0	
Apr 2, 2009	19:30	12A	359.7	41.9	0	
Apr 2, 2009	19:30	12B	321.1	36.8	0	
Apr 2, 2009	19:30	12C	284.4	33.6	0	
Apr 2, 2009	20:30	12A	363.4	42.3	0	
Apr 2, 2009	20:30	12B	320.3	36.7	0	
Apr 2, 2009	20:30	12C	285.0	33.6	0	
Apr 2, 2009	21:30	12A	366.3	42.7	0	
Apr 2, 2009	21:30	12B	318.7	36.6	0	
Apr 2, 2009	21:30	12C	285.0	33.6	0	
Apr 2, 2009	22:30	12A	364.8	42.5	0	
Apr 2, 2009	22:30	12B	319.4	36.5	0	
Apr 2, 2089	22:30	12C	284.5	33.5	0	
Apr 2, 2009	23:30	12A	354.3	40.9	0	
Apr 2, 2009	23:30	12B	317.6	36.3	1	
Apr 2, 2009	23:30	12C	284.5	33.5	0	
	Day Average		323.1	37.6	0.2	

Jamestown BPU
Unit 12
ESP Data

Date	Time	Device	Primary Volts	Secondary Kva	Sparks	LTMC / Plant Status
Apr 3, 2009	0:30	12A	355.2	41.1	0	
Apr 3, 2009	0:30	12B	318.0	36.3	1	
Apr 3, 2009	0:30	12C	284.6	33.5	0	
Apr 3, 2089	1:30	12A	353.2	40.8	0	
Apr 3, 2009	1:30	12B	317.5	36.3	0	
Apr 3, 2009	1:30	12C	284.0	33.4	0	
Apr 3, 2009	2:30	12A	354.2	40.9	0	
Apr 3, 2009	2:30	12B	316.3	36.2	0	
Apr 3, 2009	2:30	12C	284.0	33.4	0	
Apr 3, 2009	3:30	12A	354.5	40.9	0	
Apr 3, 2009	3:30	12B	316.2	36.2	0	
Apr 3, 2009	3:30	12C	284.0	33.4	0	
Apr 3, 2009	4:30	12A	353.3	40.8	0	
Apr 3, 2009	4:30	12B	315.6	36.1	0	
Apr 3, 2009	4:30	12C	283.4	33.2	0	
Apr 3, 2009	5:30	12A	351.5	40.6	0	
Apr 3, 2809	5:30	12B	314.9	36.0	0	
Apr 3, 2809	5:30	12C	282.3	33.2	0	
Apr 3, 2009	6:30	12A	358.2	41.5	0	
Apr 3, 2009	6:30	12B	315.5	36.1	0	
Apr 3, 2009	6:30	12C	283.1	33.2	0	
Apr 3, 2009	10:18	12A	350.0	40.4	0	220 - 2 mills
Apr 3, 2009	10:18	12B	319.7	36.5	0	
Apr 3, 2009	10:18	12C	284.6	33.4	0	
Apr 3, 2009	11:18	12A	359.8	41.7	0	
Apr 3, 2009	11:18	12B	321.5	36.8	0	
Apr 3, 2009	11:18	12C	284.8	33.5	0	

Jamestown BPU
Unit 12
ESP Data

Date	Time	Device	Primary Volts	Secondary Kva	Sparks	LTMC / Plant Status
Apr 3, 2009	12:18	12A	359.7	41.8	0	
Apr 3, 2009	12:18	12B	323.5	37.0	0	
Apr 3, 2009	12:18	12C	284.6	33.5	0	
Apr 3, 2009	13:18	12A	355.7	41.2	0	
Apr 3, 2009	13:18	12B	323.3	36.9	0	
Apr 3, 2009	13:18	12C	285.0	33.5	0	
Apr 3, 2009	14:18	12A	355.7	41.1	0	
Apr 3, 2009	14:18	12B	321.9	36.9	0	
Apr 3, 2009	14:18	12C	285.0	33.6	0	
Apr 3, 2009	15:18	12A	353.9	40.8	0	
Apr 3, 2009	15:18	12B	321.6	36.8	1	
Apr 3, 2009	15:18	12C	285.5	33.6	0	
Apr 3, 2009	16:18	12A	351.8	40.6	0	
Apr 3, 2009	16:18	12B	320.1	36.7	0	
Apr 3, 2009	16:18	12C	285.0	33.6	0	
Apr 3, 2009	17:18	12A	353.5	41.0	0	
Apr 3, 2009	17:18	12B	321.5	36.8	0	
Apr 3, 2009	17:18	12C	284.9	33.6	0	
Apr 3, 2009	18:18	12A	373.1	43.8	1	
Apr 3, 2009	18:18	12B	328.9	37.7	0	
Apr 3, 2009	18:18	12C	284.6	33.5	0	
Apr 3, 2009	19:18	12A	361.4	42.1	0	
Apr 3, 2009	19:18	12B	328.8	37.6	0	
Apr 3, 2009	19:18	12C	284.0	33.5	0	
Apr 3, 2009	20:18	12A	361.9	42.1	0	
Apr 3, 2009	20:18	12B	326.6	37.5	1	
Apr 3, 2009	20:18	12C	284.5	33.6	0	
Apr 3, 2009	21:18	12A	360.9	42.0	0	
Apr 3, 2009	21:18	12B	327.4	37.5	1	
Apr 3, 2009	21:18	12C	284.3	33.6	0	
Apr 3, 2009	22:18	12A	360.0	41.8	0	
Apr 3, 2009	22:18	12B	326.7	37.4	1	
Apr 3, 2009	22:18	12C	285.0	33.6	0	
Apr 3, 2009	23:18	12A	350.2	40.4	0	
Apr 3, 2009	23:18	12B	323.2	37.1	1	
Apr 3, 2009	23:18	12C	285.2	33.7	0	
Day Average			320.8	37.2	0.1	

Jamestown BPU
Unit 12
ESP Data

Date	Time	Device	Primary Volts	Secondary Kva	Sparks	LTMC / Plant Status
Apr 4, 2009	0:18	12A	347.4	40.0	0	220 - 1 mill
Apr 4, 2009	0:18	12B	322.7	37.0	2	
Apr 4, 2009	0:18	12C	286.2	33.8	0	
Apr 4, 2009	1:18	12A	344.9	39.6	0	
Apr 4, 2009	1:18	12B	322.3	36.9	0	
Apr 4, 2009	1:18	12C	286.2	33.9	0	
Apr 4, 2009	2:18	12A	345.1	39.6	0	
Apr 4, 2009	2:18	12B	322.1	36.9	0	
Apr 4, 2009	2:18	12C	287.0	33.9	0	
Apr 4, 2009	3:18	12A	345.9	39.8	0	
Apr 4, 2009	3:18	12B	322.3	37.0	0	
Apr 4, 2009	3:18	12C	287.9	34.0	0	
Apr 4, 2009	4:18	12A	344.3	39.5	0	
Apr 4, 2009	4:18	12B	323.1	37.0	0	
Apr 4, 2009	4:18	12C	286.1	33.9	0	
Apr 4, 2009	5:18	12A	345.0	39.7	0	
Apr 4, 2009	5:18	12B	322.4	37.0	0	
Apr 4, 2009	5:18	12C	287.8	34.0	0	
Apr 4, 2009	6:18	12A	345.3	39.7	0	
Apr 4, 2009	6:18	12B	322.8	37.0	0	
Apr 4, 2009	6:18	12C	287.2	34.0	0	
Apr 4, 2009	7:18	12A	348.0	40.2	0	
Apr 4, 2009	7:18	12B	323.5	37.1	0	
Apr 4, 2009	7:18	12C	287.7	34.0	0	
Apr 4, 2009	8:18	12A	352.8	40.8	0	
Apr 4, 2009	8:18	12B	324.5	37.2	1	
Apr 4, 2009	8:18	12C	287.6	34.0	0	
Apr 4, 2009	9:18	12A	352.1	40.7	0	
Apr 4, 2009	9:18	12B	324.3	37.2	0	
Apr 4, 2009	9:18	12C	287.5	34.1	0	
Apr 4, 2009	10:18	12A	352.4	40.8	0	
Apr 4, 2009	10:18	12B	324.5	37.2	0	
Apr 4, 2009	10:18	12C	288.2	34.1	0	
Apr 4, 2009	11:18	12A	351.0	40.6	0	
Apr 4, 2009	11:18	12B	324.8	37.3	0	
Apr 4, 2009	11:18	12C	288.2	34.1	0	

Jamestown BPU
Unit 12
ESP Data

Date	Time	Device	Primary Volts	Secondary Kva	Sparks	LTMC / Plant Status
Apr 4, 2009	12:18	12A	351.4	40.6	0	
Apr 4, 2009	12:18	12B	324.8	37.3	0	
Apr 4, 2009	12:18	12C	288.5	34.1	0	
Apr 4, 2009	13:18	12A	349.5	40.4	0	
Apr 4, 2009	13:18	12B	323.2	37.1	0	
Apr 4, 2009	13:18	12C	289.0	34.1	0	
Apr 4, 2009	14:18	12A	348.7	40.2	0	
Apr 4, 2009	14:18	12B	323.5	37.1	0	
Apr 4, 2009	14:18	12C	289.0	34.1	0	
Apr 4, 2009	15:18	12A	349.4	40.3	0	
Apr 4, 2009	15:18	12B	323.8	37.1	0	
Apr 4, 2009	15:18	12C	289.0	34.1	0	
Apr 4, 2009	16:18	12A	354.2	40.9	0	
Apr 4, 2009	16:18	12B	324.0	37.1	2	
Apr 4, 2009	16:18	12C	288.9	34.1	0	
Apr 4, 2009	17:18	12A	358.6	41.6	0	
Apr 4, 2009	17:18	12B	325.1	37.3	0	
Apr 4, 2009	17:18	12C	287.6	34.1	0	
Apr 4, 2009	18:18	12A	360.2	41.8	0	
Apr 4, 2009	18:18	12B	325.9	37.4	0	
Apr 4, 2009	18:18	12C	288.6	34.1	0	
Apr 4, 2089	19:18	12A	354.0	41.0	0	
Apr 4, 2009	19:18	12B	326.3	37.4	0	
Apr 4, 2009	19:18	12C	286.6	34.0	0	
Apr 4, 2009	20:18	12A	355.9	41.2	0	
Apr 4, 2009	20:18	12B	326.6	37.4	0	
Apr 4, 2009	20:18	12C	288.6	34.1	0	
Apr 4, 2009	21:18	12A	354.9	41.1	0	
Apr 4, 2009	21:18	12B	325.9	37.4	0	
Apr 4, 2009	21:18	12C	288.8	34.1	0	
Apr 4, 2089	22:18	12A	349.3	40.4	0	
Apr 4, 2009	22:18	12B	325.7	37.3	0	
Apr 4, 2009	22:18	12C	287.2	34.1	0	
Apr 4, 2009	23:18	12A	351.1	40.6	0	
Apr 4, 2009	23:18	12B	324.7	37.2	1	
Apr 4, 2009	23:18	12C	288.7	34.1	0	
	Day Average		320.8	37.2	0.1	

Jamestown BPU
Unit 12
ESP Data

Date	Time	Device	Primary Volts	Secondary Kva	Sparks	LTMC / Plant Status
Apr 5, 2009	0:18	12A	354.6	41.0	0	
Apr 5, 2009	0:18	12B	324.0	37.1	2	
Apr 5, 2009	0:18	12C	288.4	34.1	0	
Apr 5, 2009	1:18	12A	352.6	40.8	0	
Apr 5, 2009	1:18	12B	324.1	37.1	0	
Apr 5, 2009	1:18	12C	287.9	34.1	0	
Apr 5, 2009	2:18	12A	351.7	40.6	0	
Apr 5, 2009	2:18	12B	323.7	37.1	0	
Apr 5, 2009	2:18	12C	287.7	34.1	0	
Apr 5, 2009	3:18	12A	353.8	40.8	0	
Apr 5, 2009	3:18	12B	323.5	37.1	0	
Apr 5, 2009	3:18	12C	289.0	34.1	0	
Apr 5, 2009	4:18	12A	355.5	41.1	0	
Apr 5, 2009	4:18	12B	323.8	37.1	0	
Apr 5, 2009	4:18	12C	288.3	34.1	0	
Apr 5, 2009	5:18	12A	353.9	41.0	0	
Apr 5, 2009	5:18	12B	324.4	37.2	0	
Apr 5, 2009	5:18	12C	286.4	34.0	0	
Apr 5, 2009	6:18	12A	353.3	40.9	0	
Apr 5, 2009	6:18	12B	324.1	37.1	0	
Apr 5, 2009	6:18	12C	287.3	34.1	0	
Apr 5, 2009	7:18	12A	357.5	41.5	0	
Apr 5, 2009	7:18	12B	325.3	37.3	1	
Apr 5, 2009	7:18	12C	287.1	34.1	0	
Apr 5, 2009	8:18	12A	360.1	41.8	0	
Apr 5, 2009	8:18	12B	323.8	37.2	3	
Apr 5, 2009	8:18	12C	287.7	34.1	0	
Apr 5, 2009	9:18	12A	351.5	40.6	0	
Apr 5, 2009	9:18	12B	324.6	37.2	0	
Apr 5, 2009	9:18	12C	288.1	34.1	0	
Apr 5, 2009	10:18	12A	351.0	40.5	0	
Apr 5, 2009	10:18	12B	324.8	37.2	0	
Apr 5, 2009	10:18	12C	288.6	34.1	0	
Apr 5, 2009	11:18	12A	353.3	40.7	0	
Apr 5, 2009	11:18	12B	324.4	37.2	0	
Apr 5, 2009	11:18	12C	289.1	34.1	0	

Jamestown BPU
Unit 12
ESP Data

Date	Time	Device	Primary Volts	Secondary Kva	Sparks	LTMC / Plant Status
Apr 5, 2009	12:18	12A	354.2	40.9	0	
Apr 5, 2009	12:18	12B	324.0	37.1	0	
Apr 5, 2009	12:18	12C	289.7	34.1	0	
Apr 5, 2009	13:18	12A	353.3	40.7	0	
Apr 5, 2009	13:18	12B	323.5	37.1	0	
Apr 5, 2009	13:18	12C	289.0	34.1	0	
Apr 5, 2009	14:18	12A	353.3	40.8	0	
Apr 5, 2009	14:18	12B	323.1	37.0	0	
Apr 5, 2009	14:18	12C	289.0	34.1	0	
Apr 5, 2009	15:18	12A	353.1	40.7	0	
Apr 5, 2009	15:18	12B	322.6	37.0	0	
Apr 5, 2009	15:18	12C	289.0	34.1	0	
Apr 5, 2009	16:18	12A	353.7	40.8	0	
Apr 5, 2009	16:18	12B	322.6	37.0	1	
Apr 5, 2009	16:18	12C	288.2	34.1	0	
Apr 5, 2009	17:18	12A	354.9	41.0	0	
Apr 5, 2009	17:18	12B	322.3	36.9	0	
Apr 5, 2009	17:18	12C	287.5	34.0	0	
Apr 5, 2009	18:18	12A	353.6	40.8	0	
Apr 5, 2009	18:18	12B	321.6	36.9	0	
Apr 5, 2009	18:18	12C	287.6	34.0	0	
Apr 5, 2009	19:18	12A	353.2	40.8	0	
Apr 5, 2009	19:18	12B	321.9	36.9	0	
Apr 5, 2009	19:18	12C	286.8	34.0	0	
Apr 5, 2009	20:18	12A	355.0	41.0	0	
Apr 5, 2009	20:18	12B	321.4	36.9	0	
Apr 5, 2009	20:18	12C	288.0	34.0	0	
Apr 5, 2009	21:18	12A	355.0	41.0	0	
Apr 5, 2009	21:18	12B	320.7	36.8	0	
Apr 5, 2009	21:18	12C	288.3	34.1	0	
Apr 5, 2009	22:18	12A	353.3	40.8	0	
Apr 5, 2009	22:18	12B	320.9	36.8	0	
Apr 5, 2009	22:18	12C	286.8	33.9	0	
Apr 5, 2009	23:18	12A	354.1	40.9	0	
Apr 5, 2009	23:18	12B	317.7	36.6	2	
Apr 5, 2009	23:18	12C	287.1	33.9	0	
	Day Average		321.7	37.3	0.1	

Jamestown BPU
Unit 12
ESP Data

Date	Time	Device	Primary Volts	Secondary Kva	Sparks	LTMC / Plant Status
Apr 6, 2009	0:18	12A	354.8	41.0	0	
Apr 6, 2009	0:18	12B	318.6	36.5	0	
Apr 6, 2009	0:18	12C	285.7	33.8	0	
Apr 6, 2009	1:18	12A	352.6	40.8	0	
Apr 6, 2009	1:18	12B	318.3	36.4	0	
Apr 6, 2009	1:18	12C	285.1	33.7	0	
Apr 6, 2009	2:18	12A	352.6	40.7	0	
Apr 6, 2009	2:18	12B	317.6	36.4	0	
Apr 6, 2009	2:18	12C	285.1	33.7	0	
Apr 6, 2009	3:18	12A	353.4	40.8	0	
Apr 6, 2009	3:18	12B	317.6	36.4	0	
Apr 6, 2009	3:18	12C	285.0	33.6	0	
Apr 6, 2009	4:18	12A	351.6	40.6	0	
Apr 6, 2009	4:18	12B	317.6	36.4	0	
Apr 6, 2009	4:18	12C	285.0	33.6	0	
Apr 6, 2009	5:18	12A	349.4	40.4	0	
Apr 6, 2009	5:18	12B	316.9	36.3	0	
Apr 6, 2089	5:18	12C	285.0	33.6	0	
Apr 6, 2009	6:18	12A	350.2	40.4	0	
Apr 6, 2009	6:18	12B	316.5	36.3	0	
Apr 6, 2009	6:18	12C	285.0	33.6	0	
Apr 6, 2009	8:03	12A	353.0	40.7	0	
Apr 6, 2009	8:03	12B	316.0	36.2	2	
Apr 6, 2009	8:03	12C	285.2	33.6	0	
Apr 6, 2009	9:02	12A	352.2	40.6	0	
Apr 6, 2009	9:02	12B	315.8	36.2	0	
Apr 6, 2009	9:02	12C	285.0	33.6	0	
Apr 6, 2009	10:01	12A	352.0	40.6	0	
Apr 6, 2009	10:01	12B	316.7	36.3	0	
Apr 6, 2009	10:01	12C	284.6	33.5	0	
Apr 6, 2009	11:00	12A	352.7	40.7	0	
Apr 6, 2009	11:00	12B	316.9	36.3	0	
Apr 6, 2009	11:00	12C	284.5	33.5	0	
Apr 6, 2009	11:59	12A	354.1	40.9	0	
Apr 6, 2009	11:59	12B	316.8	36.3	0	
Apr 6, 2009	11:59	12C	285.0	33.6	0	

Jamestown BPU
Unit 12
ESP Data

Date	Time	Device	Primary Volts	Secondary Kva	Sparks	LTMC / Plant Status
Apr 6, 2009	12:58	12A	354.5	40.9	0	
Apr 6, 2009	12:58	12B	316.1	36.3	0	
Apr 6, 2009	12:58	12C	285.0	33.6	0	
Apr 6, 2009	13:57	12A	354.9	41.0	0	
Apr 6, 2009	13:57	12B	316.6	36.3	0	
Apr 6, 2809	13:57	12C	285.0	33.6	0	
Apr 6, 2009	14:56	12A	354.4	40.9	0	
Apr 6, 2009	14:56	12B	316.0	36.3	0	
Apr 6, 2009	14:56	12C	285.0	33.6	0	
Apr 6, 2009	15:55	12A	370.1	43.2	0	
Apr 6, 2009	15:55	12B	321.2	36.7	4	
Apr 6, 2009	15:55	12C	285.0	33.6	0	
Apr 6, 2009	16:54	12A	361.3	42.0	0	
Apr 6, 2009	16:54	12B	326.6	37.4	0	
Apr 6, 2009	16:54	12C	285.0	33.6	0	
Apr 6, 2009	17:53	12A	360.9	42.0	0	
Apr 6, 2009	17:53	12B	327.0	37.4	0	
Apr 6, 2009	17:53	12C	285.0	33.6	0	
Apr 6, 2009	18:52	12A	356.3	41.3	0	
Apr 6, 2009	18:52	12B	326.6	37.4	0	
Apr 6, 2009	18:52	12C	285.0	33.6	0	
Apr 6, 2009	19:51	12A	357.4	41.5	0	
Apr 6, 2009	19:51	12B	327.1	37.4	0	
Apr 6, 2009	19:51	12C	285.0	33.6	0	
Apr 6, 2009	20:50	12A	355.6	41.1	0	
Apr 6, 2009	20:50	12B	325.8	37.4	0	
Apr 6, 2009	20:50	12C	285.3	33.8	0	
Apr 6, 2009	21:49	12A	353.7	40.9	0	
Apr 6, 2889	21:49	12B	325.8	37.3	0	
Apr 6, 2889	21:49	12C	285.4	33.8	0	
Apr 6, 2009	22:48	12A	348.7	40.3	0	
Apr 6, 2009	22:48	12B	325.3	37.2	1	
Apr 6, 2009	22:48	12C	285.2	33.7	0	
Apr 6, 2009	23:47	12A	352.7	40.8	0	
Apr 6, 2009	23:47	12B	323.8	37.2	2	
Apr 6, 2009	23:47	12C	286.1	33.8	0	
Day Average			319.9	37.1	0.1	

Jamestown BPU
Unit 12
ESP Data

Date	Time	Device	Primary Volts	Secondary Kva	Sparks	LTMC / Plant Status
Apr 7, 2009	0:46	12A	350.4	40.5	0	
Apr 7, 2009	0:46	12B	324.1	37.1	0	
Apr 7, 2009	0:46	12C	285.3	33.8	0	
Apr 7, 2009	1:45	12A	351.9	40.7	0	
Apr 7, 2009	1:45	12B	324.8	37.2	0	
Apr 7, 2009	1:45	12C	285.0	33.7	0	
Apr 7, 2009	2:44	12A	354.5	41.0	0	
Apr 7, 2009	2:44	12B	324.1	37.2	0	
Apr 7, 2009	2:44	12C	285.0	33.7	0	
Apr 7, 2009	3:43	12A	355.5	41.2	0	
Apr 7, 2009	3:43	12B	324.1	37.2	0	
Apr 7, 2009	3:43	12C	285.0	33.7	0	
Apr 7, 2009	4:42	12A	354.4	41.0	0	
Apr 7, 2009	4:42	12B	324.1	37.2	0	
Apr 7, 2009	4:42	12C	285.1	33.7	0	
Apr 7, 2009	5:41	12A	353.8	41.0	0	
Apr 7, 2009	5:41	12B	323.8	37.1	0	
Apr 7, 2009	5:41	12C	285.3	33.8	0	
Apr 7, 2009	6:40	12A	357.0	41.5	0	
Apr 7, 2009	6:40	12B	321.7	37.1	2	
Apr 7, 2009	6:40	12C	285.3	33.7	0	
Apr 7, 2009	7:39	12A	355.2	41.2	0	
Apr 7, 2009	7:39	12B	324.4	37.2	1	
Apr 7, 2009	7:39	12C	285.2	33.7	0	
Apr 7, 2009	9:16	12A	351.9	40.8	0	
Apr 7, 2009	9:16	12B	324.9	37.3	0	
Apr 7, 2009	9:16	12C	285.0	33.7	0	
Apr 7, 2009	10:16	12A	350.9	40.7	0	
Apr 7, 2009	10:16	12B	325.0	37.3	0	
Apr 7, 2009	10:16	12C	285.0	33.7	0	
Apr 7, 2009	11:16	12A	353.9	41.0	0	
Apr 7, 2009	11:16	12B	324.7	37.3	0	
Apr 7, 2009	11:16	12C	286.3	33.9	0	

Jamestown BPU
Unit 12
ESP Data

Date	Time	Device	Primary Volts	Secondary Kva	Sparks	LTMC / Plant Status
Apr 7, 2009	12:16	12A	356.3	41.3	0	
Apr 7, 2009	12:16	12B	324.4	37.3	0	
Apr 7, 2009	12:16	12C	286.6	33.9	0	
Apr 7, 2009	13:16	12A	355.8	41.2	0	
Apr 7, 2009	13:16	12B	324.6	37.3	0	
Apr 7, 2009	13:16	12C	287.5	34.0	0	
Apr 7, 2009	14:16	12A	353.9	41.0	0	
Apr 7, 2009	14:16	12B	324.6	37.3	0	
Apr 7, 2009	14:16	12C	287.6	34.0	0	
Apr 7, 2009	15:16	12A	348.8	40.4	0	
Apr 7, 2009	15:16	12B	324.4	37.2	0	
Apr 7, 2009	15:16	12C	286.6	33.9	0	
Apr 7, 2009	16:16	12A	354.6	41.1	0	
Apr 7, 2009	16:16	12B	324.2	37.2	2	
Apr 7, 2009	16:16	12C	286.5	33.9	0	
Apr 7, 2009	17:16	12A	352.2	40.8	0	
Apr 7, 2009	17:16	12B	324.1	37.2	0	
Apr 7, 2009	17:16	12C	287.1	34.0	0	
Apr 7, 2009	18:16	12A	349.9	40.5	0	
Apr 7, 2009	18:16	12B	324.0	37.2	0	
Apr 7, 2009	18:16	12C	287.4	34.0	0	
Apr 7, 2009	19:16	12A	351.0	40.7	0	
Apr 7, 2009	19:16	12B	324.8	37.3	0	
Apr 7, 2009	19:16	12C	286.1	33.9	0	
Apr 7, 2009	20:16	12A	354.4	41.0	0	
Apr 7, 2009	20:16	12B	324.3	37.3	0	
Apr 7, 2009	20:16	12C	287.5	34.0	0	
Apr 7, 2009	21:16	12A	351.4	40.5	0	
Apr 7, 2009	21:16	12B	323.2	37.1	0	
Apr 7, 2009	21:16	12C	288.7	34.1	0	
Apr 7, 2009	22:16	12A	348.4	40.3	0	
Apr 7, 2009	22:16	12B	323.3	37.1	0	
Apr 7, 2009	22:16	12C	286.7	34.0	0	
Apr 7, 2009	23:16	12A	350.7	40.5	0	
Apr 7, 2009	23:16	12B	323.4	37.1	3	
Apr 7, 2009	23:16	12C	286.6	33.9	0	
	Day Average		321.1	37.3	0.1	

Jamestown BPU
Unit 12
ESP Data

Date	Time	Device	Primary Volts	Secondary Kva	Sparks	LTMC / Plant Status
Apr 8, 2009	0:16	12A	352.1	40.6	0	
Apr 8, 2009	0:16	12B	323.4	37.1	0	
Apr 8, 2009	0:16	12C	286.1	33.9	0	
Apr 8, 2009	1:16	12A	351.9	40.6	0	
Apr 8, 2009	1:16	12B	323.0	37.0	0	
Apr 8, 2009	1:16	12C	286.2	33.9	0	
Apr 8, 2009	2:16	12A	351.6	40.5	0	
Apr 8, 2009	2:16	12B	322.7	37.0	0	
Apr 8, 2009	2:16	12C	286.6	33.9	0	
Apr 8, 2009	3:16	12A	351.6	40.5	0	
Apr 8, 2009	3:16	12B	322.1	36.9	0	
Apr 8, 2009	3:16	12C	287.1	34.0	0	
Apr 8, 2009	4:16	12A	350.4	40.4	0	
Apr 8, 2009	4:16	12B	322.6	36.9	0	
Apr 8, 2009	4:16	12C	285.9	33.9	0	
Apr 8, 2009	5:16	12A	351.3	40.5	0	
Apr 8, 2009	5:16	12B	322.2	36.9	0	
Apr 8, 2009	5:16	12C	286.4	33.9	0	
Apr 8, 2009	6:16	12A	353.6	40.8	0	
Apr 8, 2009	6:16	12B	320.9	36.8	1	
Apr 8, 2009	6:16	12C	286.9	33.9	0	
Apr 8, 2009	7:16	12A	355.5	41.2	0	
Apr 8, 2009	7:16	12B	320.9	37.0	2	
Apr 8, 2009	7:16	12C	285.4	33.8	0	
Apr 8, 2009	8:16	12A	351.7	40.7	0	
Apr 8, 2009	8:16	12B	323.1	37.0	0	
Apr 8, 2009	8:16	12C	285.6	33.9	0	
Apr 8, 2009	10:17	12A	350.7	40.6	0	
Apr 8, 2009	10:17	12B	323.0	37.0	0	
Apr 8, 2009	10:17	12C	286.3	33.9	0	
Apr 8, 2009	11:17	12A	352.0	40.6	0	
Apr 8, 2009	11:17	12B	322.7	37.0	0	
Apr 8, 2009	11:17	12C	287.5	34.0	0	

Jamestown BPU
Unit 12
ESP Data

Date	Time	Device	Primary Volts	Secondary Kva	Sparks	LTMC / Plant Status
Apr 8, 2009	12:17	12A	353.7	40.8	0	
Apr 8, 2009	12:17	12B	322.4	37.0	0	
Apr 8, 2009	12:17	12C	288.2	34.0	0	
Apr 8, 2009	13:17	12A	352.0	40.6	0	
Apr 8, 2009	13:17	12B	322.4	36.9	0	
Apr 8, 2009	13:17	12C	288.4	34.0	0	
Apr 8, 2009	14:17	12A	351.0	40.5	0	
Apr 8, 2009	14:17	12B	322.1	37.0	0	
Apr 8, 2009	14:17	12C	286.9	33.9	0	
Apr 8, 2009	15:17	12A	353.8	40.8	0	
Apr 8, 2009	15:17	12B	322.0	36.9	0	
Apr 8, 2009	15:17	12C	288.1	34.0	0	
Apr 8, 2009	16:17	12A	355.5	41.0	0	
Apr 8, 2009	16:17	12B	320.2	36.8	2	
Apr 8, 2009	16:17	12C	288.5	34.0	0	
Apr 8, 2009	17:17	12A	357.1	41.2	0	
Apr 8, 2009	17:17	12B	321.7	36.9	0	
Apr 8, 2009	17:17	12C	288.8	34.1	0	
Apr 8, 2009	18:17	12A	355.4	41.0	0	
Apr 8, 2009	18:17	12B	321.8	36.9	0	
Apr 8, 2009	18:17	12C	288.3	34.0	0	
Apr 8, 2009	19:17	12A	354.9	41.0	0	
Apr 8, 2009	19:17	12B	322.4	36.9	0	
Apr 8, 2009	19:17	12C	287.2	34.0	0	
Apr 3, 2009	20:17	12A	357.4	41.3	0	
Apr 8, 2009	20:17	12B	322.0	36.9	0	
Apr 8, 2009	20:17	12C	288.7	34.1	0	
Apr 8, 2009	21:17	12A	357.2	41.3	0	
Apr 8, 2009	21:17	12B	322.2	36.9	0	
Apr 8, 2009	21:17	12C	288.8	34.1	0	
Apr 8, 2009	22:17	12A	356.1	41.2	0	
Apr 8, 2009	22:17	12B	322.4	36.9	0	
Apr 8, 2009	22:17	12C	286.9	33.9	0	
Apr 8, 2009	23:17	12A	357.9	41.4	0	
Apr 8, 2009	23:17	12B	321.4	36.8	3	
Apr 8, 2009	23:17	12C	287.4	34.0	0	

Jamestown BPU
Unit 12
ESP Data

Date	Time	Device	Primary Volts	Secondary Kva	Sparks	LTMC / Plant Status
Day Average			321.0	37.2	0.1	
Apr 9, 2009	0:17	12A	358.6	41.6	0	
Apr 9, 2009	0:17	12B	322.8	37.0	0	
Apr 9, 2009	0:17	12C	286.9	33.9	0	
Apr 9, 2009	1:17	12A	358.6	41.6	0	
Apr 9, 2009	1:17	12B	322.9	37.0	0	
Apr 9, 2009	1:17	12C	287.3	34.0	0	
Apr 9, 2009	2:17	12A	356.9	41.3	0	
Apr 9, 2009	2:17	12B	323.0	37.0	0	
Apr 9, 2009	2:17	12C	287.4	34.0	0	
Apr 9, 2009	3:17	12A	356.1	41.2	0	
Apr 9, 2009	3:17	12B	323.5	37.1	0	
Apr 9, 2009	3:17	12C	287.8	34.0	0	
Apr 9, 2009	4:17	12A	353.4	40.8	0	
Apr 9, 2009	4:17	12B	323.8	37.1	0	
Apr 9, 2009	4:17	12C	287.2	34.0	0	
Apr 9, 2009	5:17	12A	353.2	40.8	0	
Apr 9, 2009	5:17	12B	324.1	37.2	0	
Apr 9, 2009	5:17	12C	287.6	34.0	0	
Apr 9, 2009	6:17	12A	354.2	40.9	0	
Apr 9, 2009	6:17	12B	322.9	37.2	1	
Apr 9, 2009	6:17	12C	287.5	34.0	0	
Apr 9, 2009	7:17	12A	355.1	41.1	0	
Apr 9, 2009	7:17	12B	323.5	37.2	2	
Apr 9, 2009	7:17	12C	286.7	34.0	0	
Day Average			322.1	37.4	0.1	

APPENDIX E
World Coal Association Case Study

WORLD COAL ASSOCIATION

casestudy

USA
CONSOL Energy Inc

US coal producer CONSOL Energy Inc. has maintained the only privately-funded research and development group dedicated to enhancing coal combustion and coal utilisation for more than 50 years. Recently, CONSOL's research efforts have provided a low-cost way of capturing up to 90% of mercury emissions from coal-fired power plants.

WCA Member CONSOL Energy Inc. is the largest producer of high-quality bituminous coal in the United States, as well as the country's largest exporter of coal. In a bid to reduce fossil fuel emissions, CONSOL's research and development team is developing a potentially low-cost method for controlling mercury emissions from coal-fired power plants.

Low-cost mercury control technologies – suitable for retrofitting to existing plants – would greatly help coal-fired electricity generating plants to comply with anticipated US Environmental Protection Agency mercury reduction requirements.

How it works

Controlling mercury emissions isn't a low-cost process, but CONSOL believes its Low-Temperature Mercury Capture process is the most affordable and technically simple mercury control technology, capable of achieving up to 90% mercury removal, says Jim Locke, Manager, Field Services & Operations.

"The idea is to absorb mercury on the unburned carbon in the fly ash entrained in the flue gas, by cooling the gas to 200°-240°F with the air heater or with water sprays. The fly ash and mercury are then captured in the power plant's existing particulate collection device."

"The Low Temperature Mercury Control Process is suitable for retrofitting to existing coal-fired electricity generating plants, provided they generate sufficient quantities of unburned carbon in the fly ash."

Jim Locke,
Manager, Field Services & Operations

The process also offers another potential advantage – increasing efficiency in a cost-effective way. If an air heater is used as the cooling device, the extra recovered heat can improve the plant's overall generating efficiency.

An alkaline material, such as magnesium hydroxide, is injected into the flue gas upstream of the air heater, or added to the humidification water to capture sulphur trioxide. This prevents acid condensation at the low temperatures and resulting corrosion.

What's more, the process requires very little capital investment. Low-Temperature Mercury Capture uses the existing particulate collection device to capture the mercury-laden particles. In its simplest form, this would involve installing a water injection system if the air heater does not have enough cooling

up to

90%

mercury removal achieved through the Low-Temperature Mercury Capture process

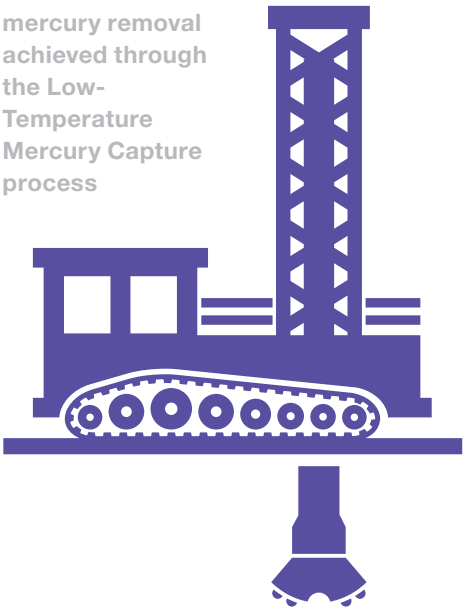

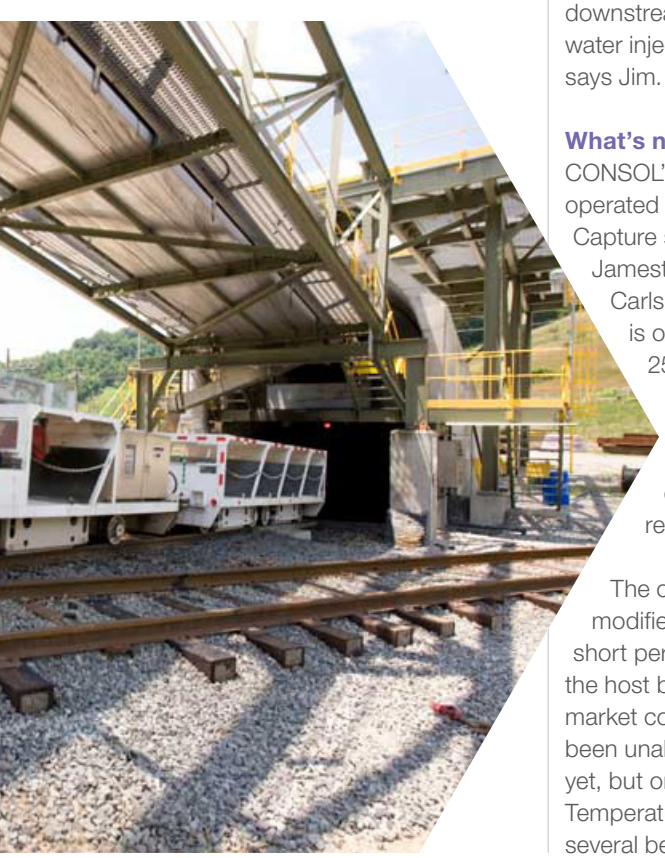

capacity to achieve the desired control temperature.

Pilot study

The team gained valuable information about effective control temperature ranges and sulphur trioxide control from a pilot project at the Allegheny Energy Mitchell Station in Pennsylvania.

Trying to achieve the appropriate control temperatures with a water spray has been particularly challenging, says Jim: "We had to determine the number of humidification lances necessary to supply enough water, with a suitable spray pattern, that would not saturate any section of the gas path and would allow the water to evaporate completely before entering the downstream particulate control device."

The pilot study also helped the team determine that it is not always necessary to add magnesium hydroxide to control sulphur trioxide. "If the sulphur trioxide concentration is already low, say two parts per million or lower, it does not generate concern over metal surface corrosion downstream – whether it is the air heater or water injection cooling device being used," says Jim.

What's next?

CONSOL's R&D team installed and briefly operated the Low-Temperature Mercury Capture system in early 2009, at the Jamestown Board of Public Utilities Carlson Station Boiler Unit 12. This is one of two boilers that feed a 25 MW steam turbine generator. However, CONSOL's team was dissatisfied with its temperature control capabilities on the demonstration unit and the resulting mercury removal rates.

The control system has since been modified and successfully tested for short periods. Mechanical problems on the host boiler and low prevailing electricity market conditions mean that the team has been unable to fully evaluate the system yet, but once fully operational, Low-Temperature Mercury Capture will have several benefits, says Jim:

"The technology has the potential to provide up to 90% mercury removal much more economically than current methods. The process is suitable for retrofitting to existing coal-fired electricity generating plants, provided they generate sufficient quantities of unburned carbon in the fly ash. The system may be applicable to the full range of coal types, but so far its effectiveness has only been shown for bituminous coals.

"And finally, as well as controlling mercury emissions, the technology reduces sulphur trioxide emissions – in most cases."

Find out more

To find out more about CONSOL's groundbreaking lead in mercury capture processes, contact:

James E Locke
Manager, Field Services and Operations
CONSOL Energy Inc

Email: jimlocke@consolenergy.com
www.consolenergy.com