COST AND PERFORMANCE BASELINE FOR FOSSIL ENERGY PLANTS, VOLUME 5: NATURAL GAS ELECTRICITY GENERATING UNITS FOR FLEXIBLE OPERATION



May 5, 2023

DOE/NETL-2023/3855

Disclaimer

This project was funded by the United States Department of Energy, National Energy Technology Laboratory, in part, through a site support contract. Neither the United States Government nor any agency thereof, nor any of their employees, nor the support contractor, nor any of their employees, makes any warranty, express or implied, or assumes any legal liability or responsibility for the accuracy, completeness, or usefulness of any information, apparatus, product, or process disclosed, or represents that its use would not infringe privately owned rights. Reference herein to any specific commercial product, process, or service by trade name, trademark, manufacturer, or otherwise does not necessarily constitute or imply its endorsement, recommendation, or favoring by the United States Government or any agency thereof. The views and opinions of authors expressed herein do not necessarily state or reflect those of the United States Government or any agency thereof.

All images in this report were created by NETL, unless otherwise noted.

Matt Oakes[1]*: Supervision, Resources, Writing – Original Draft, Methodology;* ***Jacob Konrade***[1]*: Conceptualization, Methodology, Formal Analysis, Data Curation, Writing – Review & Editing;* ***Mark Bleckinger***[1]*: Investigation, Resources;* ***Marc Turner***[1]*: Methodology, Software, Validation, Formal Analysis, Writing – Original Draft, Writing – Review & Editing, Visualization, Supervision;* ***Sydney Hughes***[1]*: Methodology, Software, Formal Analysis, Writing – Review & Editing;* ***Hannah Hoffman***[1]*: Writing – Review & Editing*
Travis Shultz[2]*: Conceptualization, Writing – Review & Editing*
Eric Lewis[2]**: Writing – Review & Editing*

[1]National Energy Technology Laboratory (NETL) support contractor
[2]NETL
*Corresponding contact: Eric.Lewis@netl.doe.gov, 412.386.5955

This report was peer reviewed by three independent peer reviewers with various affiliations and from relevant scientific disciplines to ensure that information presented is based on sound and credible science and considered technically adequate, competently performed, properly documented, and in compliance with established quality requirements. As a step beyond standard internal quality assurance and quality control procedures, the U.S. Department of Energy (DOE) Office of Fossil Energy and Carbon Management (FECM)/NETL are committed to rigorous peer review of key work products to meet the quality standards of the research community. The following individuals served on the peer review panel:

Anthony Licata, Licata Energy & Environmental Consultants, Inc.
Michael Caravaggio, Electric Power Research Institute
Charles Wilson, Southern Company

Suggested Citation:
M. Oakes, M. Turner, " Cost and Performance Baseline for Fossil Energy Plants, Volume 5: Natural Gas Electricity Generating Units for Flexible Operation," National Energy Technology Laboratory, Pittsburgh, May 5, 2023.

This page intentionally left blank.

TABLE OF CONTENTS

List of Exhibits iv
Acronyms and Abbreviations ix
Executive Summary 1
Results Analysis 4
Special Considerations on Reported Costs 18
1 Introduction 19
1.1 Generating Unit Configurations 20
2 General Evaluation Basis 22
2.1 Site Characteristics 22
2.2 Natural Gas Characteristics 25
2.3 Environmental Targets 26
2.3.1 Air Emissions Targets 26
2.3.2 Water Emissions Targets 28
2.3.3 Study Cases 28
2.3.4 Carbon Dioxide 30
2.4 Raw Water Withdrawal and Consumption 30
2.5 Conventional Versus Fast Start 31
2.6 Plant Capacity 32
2.7 Modeling Method 32
2.7.1 Low-Load Limiting Factors Overview 33
2.7.2 Performance Summary Metrics 34
2.8 Cost Estimating Method 35
2.8.1 Capital Costs 36
2.8.2 Operation and Maintenance Costs 40
2.8.3 Construction Modularization 41
2.8.4 Startup and Shutdown Costs 44
2.9 Assessment Metrics 46
2.9.1 Startup Time 47
2.9.2 Ramp Rate 48
2.9.3 Minimum Emissions-Compliant Load 49
2.9.4 Design Life 49
2.9.5 Net Plant Heat Rate 49
2.9.6 Availability and Reliability 51
2.9.7 Planned Outages 51
2.9.8 EPC Capital Costs 52
2.9.9 Operation and Maintenance 52
3 Natural Gas Power Plants 55
3.1 Natural Gas Technology Comparison 55
3.2 Process Areas 55
3.2.1 Natural Gas Supply System 55
3.2.2 Combustion Generator 56

3.2.3 Heat Recovery Steam Generator 58
3.2.4 NOx Control System 59
3.2.5 CO/VOC Control System 59
3.2.6 Steam Turbine 60
3.2.7 Water and Steam Systems 61
3.2.8 Accessory Electric Plant 62
3.2.9 Instrumentation and Control 62
3.2.10 Waste Treatment/Miscellaneous Systems 63
3.3 Reciprocating Internal Combustion Engine Cases 63
3.3.1 Key System Assumptions, RICE 64
3.3.2 Sparing Philosophy, RICE 65
3.3.3 Case R6A-S – Process Description 65
3.3.4 Case R6A-S – Full Load Performance Results 68
3.3.5 Case R6A-S – Part Load Performance Results 75
3.3.6 Case R6A-E – Part Load Performance Results 79
3.3.7 Case R6A-S – Major Equipment List 83
3.3.8 Case R6A-S – Cost Estimating 85
3.3.9 Case R12A-S – Process Description 90
3.3.10 Case R12A-S – Full Load Performance Results 91
3.3.11 Case R12A-S – Part Load Performance Results 99
3.3.12 Case R12A-E – Part Load Performance Results 103
3.3.13 Case R12A-S – Major Equipment List 107
3.3.14 Case R12A-S – Cost Estimating 109
3.3.15 Spinning versus Efficiency mode for RICE Cases 114
3.4 Aeroderivative Cases 116
3.4.1 Key System Assumptions, Aeroderivative 116
3.4.2 Sparing Philosophy, Aeroderivative 117
3.4.3 Case SC1A – Process Description 118
3.4.4 Case SC1A – Full Load Performance Results 120
3.4.5 Case SC1A – Part Load Performance Results 127
3.4.6 Case SC1A – Major Equipment List 131
3.4.7 Case SC1A – Cost Estimating 133
3.4.8 Case SC2A – Process Description 138
3.4.9 Case SC2A – Full Load Performance Results 139
3.4.10 Case SC2A – Part Load Performance Results 147
3.4.11 Case SC2A – Major Equipment List 151
3.4.12 Case SC2A – Cost Estimating 152
3.5 Natural Gas Combined Cycle Cases 157
3.5.1 Key System Assumptions, NGCC 158
3.5.2 Sparing Philosophy, NGCC 159
3.5.3 Case CC1A-F – Process Description 160
3.5.4 Case CC1A-F – Full Load Performance Results 162
3.5.5 Case CC1A-F – Part Load Performance Results 169
3.5.6 Case CC1A-F – Major Equipment List 174

3.5.7 Case CC1A-F – Cost Estimating 176
3.5.8 Case CC1A-H – Process Description 181
3.5.9 Case CC1A-H – Full Load Performance Results 182
3.5.10 Case CC1A-H – Part Load Performance Results 191
3.5.11 Case CC1A-H – Major Equipment List 195
3.5.12 Case CC1A-H – Cost Estimating 197
3.5.13 Case CC2A-F – Process Description 202
3.5.14 Case CC2A-F – Full Load Performance Results 203
3.5.15 Case CC2A-F – Part Load Performance Results 211
3.5.16 Case CC2A-F – Major Equipment List 216
3.5.17 Case CC2A-F – Cost Estimating 218
3.5.18 Case CC2A-FC – Cost Estimating 223
3.5.19 Case CC2A-H – Process Description 228
3.5.20 Case CC2A-H – Full Load Performance Results 229
3.5.21 Case CC2A-H – Part Load Performance Results 237
3.5.22 Case CC2A-H – Major Equipment List 241
3.5.23 Case CC2A-H – Cost Estimating 243
3.6 Natural Gas Case Summary 248
3.6.1 Performance Results 248
3.6.2 Flexibility Metric Results Comparison 256
3.6.3 Cost Results 259
3.6.4 F-Class NGCC Results Comparison 262
4 References 268
Appendix: Starts-Based O&M Costs 271

LIST OF EXHIBITS

Exhibit ES-1. Case configuration summary 1
Exhibit ES-2. Emission controls 3
Exhibit ES-3. Performance summary and environmental profile for NG technologies 7
Exhibit ES-4. HHV net plant efficiency for NG technologies 9
Exhibit ES-5. LHV net plant efficiency for NG technologies 10
Exhibit ES-6. Normalized auxiliary power consumption cross-case comparison for NG technologies 11
Exhibit ES-7. Flexibility metrics for all cases 12
Exhibit ES-8. Total overnight cost, by component, for all NG technologies 14
Exhibit ES-9. Summary of cost components for all NG technologies 15
Exhibit ES-10. Non-fuel variable O&M costs as a function of plant load for all NG technologies 16
Exhibit ES-11. Fuel costs as a function of plant load for all NG technologies 17
Exhibit 1-1. Case configuration summary 20
Exhibit 2-1. Site characteristics 22
Exhibit 2-2. Site ambient conditions 23
Exhibit 2-3. Design makeup water quality 24
Exhibit 2-4. Natural gas composition 25
Exhibit 2-5. NSPS emission limits for SO_2, NOx, CO, and VOC 26
Exhibit 2-6. BACT emission limits for NOx, CO, and VOC 27
Exhibit 2-7. BACT limits for RICE cases 28
Exhibit 2-8. BACT limits for NGSC cases 29
Exhibit 2-9. BACT limits for NGCC cases 30
Exhibit 2-10. Discrete load points, percent of plant full load 33
Exhibit 2-11. Capital cost levels and their elements 37
Exhibit 2-12. Shipping logistics size and weight constraints 42
Exhibit 2-13. High/low modularization potential comparisons 42
Exhibit 2-14. Major equipment category suppliers 43
Exhibit 2-15. Assessment metric characterization 46
Exhibit 2-16. Example NGCC power plant startup curve 48
Exhibit 2-17. Example breakdown of an NGCC power plant startup process 48
Exhibit 3-1. RICE typical scope of supply 56
Exhibit 3-2. Combustion turbine typical scope of supply 57
Exhibit 3-3. NGCC steam conditions 60
Exhibit 3-4. Plant study configuration matrix, RICE 64
Exhibit 3-5. BOP assumptions, RICE 64
Exhibit 3-6. Case R6A-S BFD, RICE 66
Exhibit 3-7. Case R6A-S stream table, RICE 67
Exhibit 3-8. Case R6A-S plant performance summary 68
Exhibit 3-9. Case R6A-S plant power summary 69
Exhibit 3-10. Case R6A-S air emissions 70
Exhibit 3-11. Case R6A-S carbon balance 70
Exhibit 3-12. Case R6A-S sulfur balance 71
Exhibit 3-13. Case R6A-S energy and mass balance, RICE 73
Exhibit 3-14. Case R6A-S overall energy balance (0°C [32°F] reference) 75

Exhibit 3-15. Case R6A-S part load plant performance summary 76
Exhibit 3-16. Case R6A-S part load plant power summary 77
Exhibit 3-17. Case R6A-S part load air emissions summary 78
Exhibit 3-18. Case R6A-S part load itemized efficiencies....79
Exhibit 3-19. Case R6A-E part load plant performance summary 80
Exhibit 3-20. Case R6A-E part load plant power summary 81
Exhibit 3-21. Case R6A-E part load air emissions summary 82
Exhibit 3-22. Case R6A-E part load itemized efficiencies....83
Exhibit 3-23. Case R6A-S total plant cost details 86
Exhibit 3-24. Case R6A-S owner's costs 88
Exhibit 3-25. Case R6A-S initial and annual operating and maintenance costs 89
Exhibit 3-26. Case R6A synchronization startup and shutdown costs 90
Exhibit 3-27. Case R6A full load startup and shutdown costs 90
Exhibit 3-28. Case R12A-S BFD, RICE 91
Exhibit 3-29. Case R12A-S stream table, RICE 92
Exhibit 3-30. Case R12A-S plant performance summary 93
Exhibit 3-31. Case R12A-S plant power summary 94
Exhibit 3-32. Case R12A-S air emissions....95
Exhibit 3-33. Case R12A-S carbon balance 95
Exhibit 3-34. Case R12A-S sulfur balance 96
Exhibit 3-35. Case R12A-S energy and mass balance, RICE....97
Exhibit 3-36. Case R12A-S overall energy balance (0°C [32°F] reference) 99
Exhibit 3-37. Case R12A-S part load plant performance summary 100
Exhibit 3-38. Case R12A-S part load plant power summary 101
Exhibit 3-39. Case R12A-S part load air emissions summary 102
Exhibit 3-40. Case R12A-S part load itemized efficiencies....103
Exhibit 3-41. Case R12A-E part load plant performance summary 104
Exhibit 3-42. Case R12A-E part load plant power summary 105
Exhibit 3-43. Case R12A-E part load air emissions summary 106
Exhibit 3-44. Case R12A-E part load itemized efficiencies....107
Exhibit 3-45. Case R12A-S total plant cost details 110
Exhibit 3-46. Case R12A-S owner's costs 112
Exhibit 3-47. Case R12A-S initial and annual operating and maintenance costs 113
Exhibit 3-48. Case R12A-S synchronization startup and shutdown costs 114
Exhibit 3-49. Case R12A-S full load startup and shutdown costs 114
Exhibit 3-50. Net plant efficiency comparison between spinning and efficiency mode RICE cases 115
Exhibit 3-51. Plant study configuration matrix, aeroderivative 116
Exhibit 3-52. BOP assumptions, Aeroderivative....117
Exhibit 3-53. Case SC1A BFD, aeroderivative 118
Exhibit 3-54. Case SC1A stream table, aeroderivative 119
Exhibit 3-55. Case SC1A plant performance summary....120
Exhibit 3-56. Case SC1A plant power summary 121
Exhibit 3-57. Case SC1A air emissions 122
Exhibit 3-58. Case SC1A carbon balance 123
Exhibit 3-59. Case SC1A sulfur balance....123
Exhibit 3-60. Case SC1A water balance 123

Exhibit 3-61. Case SC1A energy and mass balance, aeroderivative....125
Exhibit 3-62. Case SC1A overall energy balance (0°C [32°F] reference) 127
Exhibit 3-63. Case SC1A part load plant performance summary....128
Exhibit 3-64. Case SC1A part load plant power summary....129
Exhibit 3-65. Case SC1A part load air emissions summary....130
Exhibit 3-66. Case SC1A part load itemized efficiencies 131
Exhibit 3-67. Case SC1A total plant cost details....134
Exhibit 3-68. Case SC1A owner's costs....136
Exhibit 3-69. Case SC1A initial and annual operating and maintenance costs....137
Exhibit 3-70. Case SC1A synchronization startup and shutdown costs 138
Exhibit 3-71. Case SC1A full load startup and shutdown costs 138
Exhibit 3-72. Case SC2A BFD, aeroderivative 139
Exhibit 3-73. Case SC2A stream table, aeroderivative 140
Exhibit 3-74. Case SC2A plant performance summary....141
Exhibit 3-75. Case SC2A plant power summary 142
Exhibit 3-76. Case SC2A air emissions....143
Exhibit 3-77. Case SC2A carbon balance 143
Exhibit 3-78. Case SC2A sulfur balance....144
Exhibit 3-79. Case SC2A energy and mass balance, aeroderivative....145
Exhibit 3-80. Case SC2A overall energy balance (0°C [32°F] reference) 147
Exhibit 3-81. Case SC2A part load plant performance summary....148
Exhibit 3-82. Case SC2A part load plant power summary....149
Exhibit 3-83. Case SC2A part load air emissions summary....150
Exhibit 3-84. Case SC2A part load itemized efficiencies 150
Exhibit 3-85. Case SC2A total plant cost details....153
Exhibit 3-86. Case SC2A owner's costs....155
Exhibit 3-87. Case SC2A initial and annual operating and maintenance costs....156
Exhibit 3-88. Case SC2A synchronization startup and shutdown costs 157
Exhibit 3-89. Case SC2A full load startup and shutdown costs 157
Exhibit 3-90. Plant study configuration matrix, NGCC....158
Exhibit 3-91. BOP assumptions, NGCC 159
Exhibit 3-92. Case CC1A-F BFD, NGCC....160
Exhibit 3-93. Case CC1A-F stream table, NGCC....161
Exhibit 3-94. Case CC1A-F plant performance summary....162
Exhibit 3-95. Case CC1A-F plant power summary 163
Exhibit 3-96. Case CC1A-F air emissions....164
Exhibit 3-97. Case CC1A-F carbon balance 164
Exhibit 3-98. Case CC1A-F sulfur balance....165
Exhibit 3-99. Case CC1A-F water balance 165
Exhibit 3-100. Case CC1A-F energy and mass balance, NGCC 167
Exhibit 3-101. Case CC1A-F overall energy balance (0°C [32°F] reference)....169
Exhibit 3-102. Case CC1A-F part load plant performance summary....170
Exhibit 3-103. Case CC1A-F part load plant power summary....171
Exhibit 3-104. Case CC1A-F part load air emissions summary....172
Exhibit 3-105. Case CC1A-F part load itemized efficiencies 173
Exhibit 3-106. Case CC1A-F total plant cost details....177
Exhibit 3-107. Case CC1A-F owner's costs....179

Exhibit 3-108. Case CC1A-F initial and annual operating and maintenance costs.....180
Exhibit 3-109. Case CC1A-F synchronization startup and shutdown costs.....181
Exhibit 3-110. Case CC1A-F full load startup and shutdown costs 181
Exhibit 3-111. Case CC1A-H BFD, NGCC 182
Exhibit 3-112. Case CC1A-H stream table, NGCC 183
Exhibit 3-113. Case CC1A-H plant performance summary 184
Exhibit 3-114. Case CC1A-H plant power summary.....185
Exhibit 3-115. Case CC1A-H air emissions 186
Exhibit 3-116. Case CC1A-H carbon balance.....186
Exhibit 3-117. Case CC1A-H sulfur balance.....187
Exhibit 3-118. Case CC1A-H water balance.....187
Exhibit 3-119. Case CC1A-H energy and mass balance, NGCC.....189
Exhibit 3-120. Case CC1A-H overall energy balance (0°C [32°F] reference) 191
Exhibit 3-121. Case CC1A-H part load plant performance summary 192
Exhibit 3-122. Case CC1A-H part load plant power summary.....193
Exhibit 3-123. Case CC1A-H part load air emissions summary.....194
Exhibit 3-124. Case CC1A-H part load itemized efficiencies 194
Exhibit 3-125. Case CC1A-H total plant cost details 198
Exhibit 3-126. Case CC1A-H owner's costs 200
Exhibit 3-127. Case CC1A-H initial and annual operating and maintenance costs.....201
Exhibit 3-128. Case CC1A-H synchronization startup and shutdown costs.....202
Exhibit 3-129. Case CC1A-H full load startup and shutdown costs.....202
Exhibit 3-130. Case CC2A-F BFD, NGCC 203
Exhibit 3-131. Case CC2A-F stream table, NGCC.....204
Exhibit 3-132. Case CC2A-F plant performance summary.....205
Exhibit 3-133. Case CC2A-F plant power summary 206
Exhibit 3-134. Case CC2A-F air emissions.....207
Exhibit 3-135. Case CC2A-F carbon balance 207
Exhibit 3-136. Case CC2A-F sulfur balance.....208
Exhibit 3-137. Case CC2A-F water balance 208
Exhibit 3-138. Case CC2A-F energy and mass balance, NGCC 209
Exhibit 3-139. Case CC2A-F overall energy balance (0°C [32°F] reference).....211
Exhibit 3-140. Case CC2A-F part load plant performance summary.....212
Exhibit 3-141. Case CC2A-F part load plant power summary.....213
Exhibit 3-142. Case CC2A-F part load air emissions summary.....214
Exhibit 3-143. Case CC2A-F part load itemized efficiencies 215
Exhibit 3-144. Case CC2A-F total plant cost details.....219
Exhibit 3-145. Case CC2A-F owner's costs.....221
Exhibit 3-146. Case CC2A-F initial and annual operating and maintenance costs.....222
Exhibit 3-147. Case CC2A-F synchronization startup and shutdown costs.....223
Exhibit 3-148. Case CC2A-F full load startup and shutdown costs 223
Exhibit 3-149. Case CC2A-FC total plant cost details.....224
Exhibit 3-150. Case CC2A-FC owner's costs.....226
Exhibit 3-151. Case CC2A-FC initial and annual operating and maintenance costs.....227
Exhibit 3-152. Case CC2A-FC synchronization startup and shutdown costs.....228
Exhibit 3-153. Case CC2A-FC full load startup and shutdown costs.....228
Exhibit 3-154. Case CC2A-H block flow diagram, NGCC 229

Exhibit 3-155. Case CC2A-H stream table, NGCC 230
Exhibit 3-156. Case CC2A-H plant performance summary 231
Exhibit 3-157. Case CC2A-H plant power summary 232
Exhibit 3-158. Case CC2A-H air emissions 233
Exhibit 3-159. Case CC2A-H carbon balance 234
Exhibit 3-160. Case CC2A-H sulfur balance 234
Exhibit 3-161. Case CC2A-H water balance 234
Exhibit 3-162. Case CC2A-H energy and mass balance, NGCC 235
Exhibit 3-163. Case CC2A-H overall energy balance (0°C [32°F] reference) 237
Exhibit 3-164. Case CC2A-H part load plant performance summary 238
Exhibit 3-165. Case CC2A-H part load plant power summary 239
Exhibit 3-166. Case CC2A-H part load air emissions summary 240
Exhibit 3-167. Case CC2A-H part load itemized efficiencies 240
Exhibit 3-168. Case CC2A-H total plant cost details 244
Exhibit 3-169. Case CC2A-H owner's costs 246
Exhibit 3-170. Case CC2A-H initial and annual operating and maintenance costs 247
Exhibit 3-171. Case CC2A-H synchronization startup and shutdown costs 248
Exhibit 3-172. Case CC2A-H full load startup and shutdown costs 248
Exhibit 3-173. Performance summary and environmental profile for NG technologies 251
Exhibit 3-174. Combustion turbine/reciprocating engine cross case comparison for NG technologies 253
Exhibit 3-175. HHV net plant efficiency for NG technologies 254
Exhibit 3-176. LHV net plant efficiency for NG technologies 255
Exhibit 3-177. Normalized auxiliary power consumption cross-case comparison for NG technologies 256
Exhibit 3-178. Flexibility metrics for all NG technologies 257
Exhibit 3-179. Total overnight cost, by component, for all NG technologies 259
Exhibit 3-180. Summary of cost components for all NG technologies 260
Exhibit 3-181. Non-fuel variable O&M costs as a function of plant load for all NG technologies 261
Exhibit 3-182. Fuel costs as a function of plant load for all NG technologies 262
Exhibit 3-183. Baseload plant performance summary comparison: Case B31A and Case CC2A-FC 263
Exhibit 3-184. Baseload plant power summary comparison: Case B31A and Case CC2A-FC 263
Exhibit 3-185. Baseload plant waterfall plot: Case B31A and Case CC2A-FC 265
Exhibit 3-186. Baseload plant air emissions summary comparison: Case B31A and Case CC2A-FC 266
Exhibit A-1. Case CC1A-F initial and annual O&M costs (starts-based) 271
Exhibit A-2. Case CC1A-H initial and annual O&M costs (starts-based) 272
Exhibit A-3. Case CC2A-F initial and annual O&M costs (starts-based) 273
Exhibit A-4. Case CC2A-FC initial and annual O&M costs (starts-based) 274
Exhibit A-5. Case CC2A-H initial and annual O&M costs (starts-based) 275

ACRONYMS AND ABBREVIATIONS

AACE	AACE International (formerly Association for the Advancement of Cost Engineering)
abs	Absolute
AC	Alternating current
ACC	Air-cooled condenser
acfm	Actual cubic feet per minute
ANSI	American National Standards Institute
AQCS	Air quality control system
Ar	Argon
ASME	American Society of Mechanical Engineers
Aspen	Aspen Plus®
ASU	Air separation unit
atm	Atmosphere (14.696 psi)
B&W	Black and white
BACT	Best Available Control Technology
BEC	Bare erected cost
BFD	Block flow diagram
BFW	Boiler feedwater
BOP	Balance of plant
Btu	British thermal unit
Btu/hr	British thermal units per hour
Btu/kWh	British thermal units per kilowatt hour
Btu/lb	British thermal units per pound
Btu/lbm	British thermal units per pound-mass
Btu/scf	British thermal units per standard cubic foot
$CaCO_3$	Calcium carbonate
CC	Combined cycle
CEMS	Continuous emission monitoring systems
CF	Capacity factor
CFR	Code of Federal Regulations
CG	Combustion Generator
CH_4	Methane
CH_4S	Methanethiol
cm	Centimeter
CO	Carbon monoxide
CO_2	Carbon dioxide
CS	Carbon steel
CT	Combustion turbine
CTG	Combustion turbine generator
DC	Direct current
DCS	Distributed control system
DI	De-ionized
DLN	Dry low NOx
DOE	Department of Energy
EAF	Equivalent availability factor
EFOR	Equivalent Forced Outage Rate
EGU	Electric utility steam generating unit
ELG	Effluent Limitation Guidelines
Eng'g CM H.O.& Fee	Engineering, construction management, home office and fees
EPA	Environmental Protection Agency
EPC	Engineering, procurement, and construction
EPCC	Engineering, procurement, and construction cost
ft	Foot, feet
ft^3	Cubic feet
FW	Feedwater
GADS	Generating Availability Data System
gal	Gallon
GJ	Gigajoule
GJ/hr	Gigajoules per hour
gpd	Gallons per day
gpm	Gallons per minute
gr/100 scf	Grains per one hundred standard cubic feet
GT	Gas turbine
GW	Gigawatt
h, hr	Hour
H_2	Hydrogen
H_2O	Water
H_2S	Hydrogen sulfide
HAP	Hazardous air pollutant
HCl	Hydrochloric acid

HCO_3	Bicarbonate
Hg	Mercury
HHV	Higher heating value
hp	Horsepower
HP	High pressure
hr	Hour
HRSG	Heat recovery steam generator
HVAC	Heating, ventilating, and air conditioning
Hz	Hertz
ICE	Internal combustion engine
IEEE	Institute of Electrical and Electronics Engineers
IGV	Inlet guide vane
in.	Inch
in. Hg	Inch mercury
IP	Intermediate pressure
ISO	International Organization for Standardization
kg/GJ	Kilograms per gigajoule
kg/hr	Kilograms per hour
kg/m^3	Kilograms per cubic meter
kgmol	Kilogram mole
kgmol/hr	Kilogram moles per hour
kJ	Kilojoule
kJ/hr	Kilojoules per hour
kJ/kg	Kilojoules per kilogram
km	Kilometer
kV	Kilovolt
kW, kWe	Kilowatt electric
kWh	Kilowatt-hour
kWt	Kilowatt thermal
LAER	Lowest Achievable Emission Rate
lb	Pound
lb/ft^3	Pounds per cubic foot
lb/hr	Pounds per hour
lb/MMBtu	Pounds per million British thermal units
lb/MWh	Pounds per megawatt hour
lb-S	Pounds of sulfur
lbmol/hr	Pound moles per hour
LHV	Lower heating value
LP	Low pressure
lpm	Liters per minute
m	Meter
m^3/d	Cubic meters per day
m^3/min	Cubic meters per minute
MECL	Minimum emissions-compliant load
mi	Mile
MJ/scm	Megajoule per standard cubic meter
mm	Millimeter
MM	Million
MMBtu	Million British thermal units
mol%	Percent by mole
MPa	Megapascal
MVA	Mega volt-amps
MW	Megawatt
MWe	Megawatt electric
MWh	Megawatt-hour
N_2	Nitrogen
N/A	Not applicable
NEMA	National Electrical Manufacturers Association
NERC	North American Electric Reliability Council
NESHAP	National Emission Standards for Hazardous Air Pollutants
NETL	National Energy Technology Laboratory
NG	Natural gas
NGCC	Natural gas combined cycle
NGSC	Natural gas simple cycle
NH_3	Ammonia
NOAK	N^{th}-of-a-kind
NOx	Nitrogen oxide
NPHR	Net plant heat rate
NSPS	New Source Performance Standards
NSR	New Source Review
NTU	Nephelometric turbidity unit
O_2	Oxygen
O&M	Operation and maintenance
OEM	Original equipment manufacturer
O-H, OH	Overhead
p.f.	Power factor
ph	Phase
pH	Power of hydrogen

PM	Particulate matter
POTW	Publicly-owned treatment works
ppm	Parts per million
ppmv	Parts per million volume
ppmvd	Parts per million volume, dry
PSD	Prevention of Significant Deterioration
psia	Pound per square inch absolute
psig	Pound per square inch gage
PTC	Power Test Code
QGESS	Quality Guidelines for Energy System Studies
R&D	Research and development
RD&D	Research, development, and demonstration
RICE	Reciprocating internal combustion engine
RO	Reverse osmosis
SC	Simple cycle
SCR	Selective catalytic reduction
SO_2	Sulfur dioxide
SS	Stainless steel
ST	Steam turbine
STG	Steam turbine generator
TOC	Total overnight cost
tonne	Metric ton (1,000 kg)
TPC	Total plant cost
U.S.	United States
Unlim.	Unlimited
USD	U.S. dollar
V	Volt
V-L	Vapor liquid portion of stream (excluding solids)
VOC	Volatile organic compound
VT	Voltage transformer
WG	Water gauge
WI	Water injected
wt%	Percent by weight
yr	Year
$/GJ	Dollars per gigajoule
$/kW	Dollars per kilowatt
$/MMBtu	Dollars per million British thermal units
µS/cm	Micro Siemens per cm
°C	Degrees Celsius
°F	Degrees Fahrenheit
5-10s	50-hour work week

This page intentionally left blank.

EXECUTIVE SUMMARY

This report presents an independent assessment—using a systematic and transparent technical and economic approach—of the cost and performance of greenfield fossil energy power systems intended for flexible rather than baseload operation. This report addresses select state of the art natural gas power systems—reciprocating internal combustion engines (RICE), aeroderivative combustion turbines (CT)-based natural gas simple cycle (NGSC), and natural gas combined cycle (NGCC) plants without carbon dioxide (CO_2) capture; however, it is anticipated that additional plants, including those incorporating carbon capture, will be added in the future.

This report, Volume 5 – Natural Gas Electricity Generating Units for Flexible Operation, is the latest of a five-volume series:

- Volume 1: Bituminous Coal and Natural Gas to Electricity
- Volume 2: Coal to Synthetic Natural Gas and Ammonia (Various Coal Ranks)
- Volume 3: Low Rank Coal and Natural Gas to Electricity
- Volume 4: Bituminous Coal to Liquid Fuels
- Volume 5: Natural Gas Electricity Generating Units for Flexible Operation

Nine power plant configurations (11 total cases) are analyzed in this report. A summary of the configurations is shown in Exhibit ES-1:

- Two RICE plant configurations analyzed in spinning and efficiency modes
- Two NGSC aeroderivative CT plant configurations
- Four fast start NGCC plant configurations including 1x1 F-Class, 2x1 F-Class, 1x1 H-Class, and 2x1 H-Class configurations
- One conventional start NGCC 2x1 F-Class plant configuration

Exhibit ES-1. Case configuration summary

Case[A]	Plant Type	Steam Cycle[B], psia/°F/°F	Engine/Combustion Turbine	Boiler Technology	Notes
R6A-S	RICE	N/A	6 x State-of-the-art 18 MW RICE	N/A	Spinning Mode[C]
R6A-E	RICE	N/A	6 x State-of-the-art 18 MW RICE	N/A	Efficiency Mode[C]
R12A-S	RICE	N/A	12 x State-of-the-art 9 MW RICE	N/A	Spinning Mode[C]
R12A-E	RICE	N/A	12 x State-of-the-art 9 MW RICE	N/A	Efficiency Mode[C]
SC1A	NGSC	N/A	1 x State-of-the-art 100 MW Aero	N/A	Fast Start[D]
SC2A	NGSC	N/A	2 x State-of-the-art 50 MW Aero	N/A	Fast Start [D]
CC1A-F	NGCC	2,400/1,085/1,085	1 x State-of-the-art F-class	HRSG	Fast Start [D]
CC1A-H	NGCC	2,400/1,085/1,085	1 x State-of-the-art H-class	HRSG	Fast Start [D]

Case[A]	Plant Type	Steam Cycle[B], psia/°F/°F	Engine/Combustion Turbine	Boiler Technology	Notes
CC2A-F	NGCC	2,400/1,085/1,085	2 x State-of-the-art F-class	HRSG	Fast Start [D]
CC2A-FC	NGCC	2,400/1,085/1,085	2 x State-of-the-art F-class	HRSG	Conventional Start[D]
CC2A-H	NGCC	2,400/1,085/1,085	2 x State-of-the-art H-class	HRSG	Fast Start [D]

[A] All plants in this report are assumed to be located at a generic plant site in the midwestern United States
[B] All plants in this report are dry cooled
[C] Spinning and Efficiency modes are purely operational differences and units can easily switch between modes. In spinning mode, all units simultaneously respond to demand, whereas in efficiency mode each unit sequentially responds to demand with the remaining units either operating at full-load or shut down
[D] Configurations designated as fast start include miscellaneous equipment and monitoring systems to enable reduced startup times (See Section 2.5)

For consistency with Volume 1 of the Fossil Energy Baseline series, all plant configurations were evaluated based on installation at a generic midwestern greenfield site. Capacity factors (CFs) were not defined (i.e., CF = 100 percent) for any of the plants evaluated in this report, since the CF is heavily dependent on the operational profile of the plant, which will depend upon the details of the particular market in which the plant is deployed.

Individual natural gas-fueled RICE units vary in size from about 100 kW to over 20 MW. The two representative units considered here are typically used for power generation as they are on the larger end of the spectrum and are more efficient. The 9 MW and 18 MW selections allow for an overall plant power production similar to the simple cycle (SC) aeroderivative combustion turbine options with a reasonable number of RICE units.

Aeroderivative combustion turbines vary in size from about 5 MW to just over 100 MW. Larger aeroderivative units are more efficient and more common for power generation applications. The 50 MW and 100 MW representative units running in a SC configuration benefit the most from economies of scale while minimizing the number of units per plant.

The current natural gas combustion turbine market offers multiple frame size options, supplied by several different original equipment manufacturers. This study considers representative F-class and H-class (or advanced class) combustion turbines as they represent the vast majority of new units installed today. These can be used in SC operation, but it is more common for the size and efficiency of the units to benefit from a combined cycle (CC) configuration.

Emissions for all technologies are required to meet the limits of the New Source Performance Standards (NSPS) and National Emission Standards for Hazardous Air Pollutants (NESHAP). Best Available Control Technology (BACT) targets are more restrictive than the NSPS limits and are used as the design emissions targets for this study. BACT targets are provided for nitrogen oxide (NOx), carbon monoxide (CO), and volatile organic compounds (VOCs). Based on the assumptions presented in this study, all plants comply with the November 2015 update to the Effluent Limitation Guidelines (ELG) that regulate plant water emissions.

To reduce the reliance on geographic water availability, dry cooling was used in all cases, which consume no water to reject heat.

Natural gas power plants can control NOx through a variety of ways including water injected (WI) combustors, dry low NOx (DLN) burners, selective catalytic reduction (SCR), or a combination of these technologies. A CO catalyst is implemented to control both CO and VOC emissions. Sulfur dioxide (SO_2) emissions are limited by using low sulfur natural gas. The specific emission controls used in each case are provided in Exhibit ES-2.

Exhibit ES-2. Emission controls

	R6A-E R6A-S	R12A-E R12A-S	SC1A	SC2A	CC1A-F	CC1A-H	CC2A-F CC2A-FC	CC2A-H
NOx Control	SCR	SCR	WI, SCR	DLN, SCR	DLN, SCR	DLN, SCR	DLN, SCR	DLN, SCR
CO Control	CO Catalyst							
VOC Control	CO Catalyst							
SO_2 Control	Low Sulfur Fuel							

The method for developing the performance results presented in this report included performing steady-state simulations of the power plant configurations using the Aspen Plus® (Aspen) process modeling software. Performance curves were estimated for each case by modeling the performance at discrete part load operating points. The major plant equipment performance and process limits (including the performance curves) were based on published reports, information obtained from vendors and users of the technology, performance data from design/build utility projects, and/or best engineering judgment. [1] Energy and mass balance data from the Aspen models were used to size major pieces of equipment, which formed the basis for developing the cost estimates.

The methods for assessing plant flexibility (e.g., ramp rate, minimum load) included utilizing results of modeled unit performance; utilizing industry references that outlined flexibility that has been empirically achieved by natural gas EGUs; and/or utilizing Black & Veatch in-house data.

The capital and operating costs for the major equipment and plant sub-systems were estimated by Black & Veatch based on the simulation results. They used an in-house database, legacy plant estimates, and conceptual estimating models. The cost results were further calibrated using a combination of adjusted vendor-furnished data and scaled estimates from previous design/build projects. The cost results are reported in 2018 United States dollars (USD).

This report reflects varying degrees of technology vendor input. RICE and combustion turbine (CT) data were received from vendors and are considered representative of similar sized units in the market. However, the final assessment of performance and cost was determined independently and is not endorsed by the individual vendors.

The baseline fuel cost for this analysis is specified in the Quality Guidelines for Energy System Studies (QGESS) document “Fuel Prices for Selected Feedstocks in NETL Studies.” [2] The

levelized price for natural gas delivered to the Midwest is $4.16/GJ ($4.42/MMBtu), on a higher heating value (HHV) basis and in 2018 USD.[a]

The cost of electricity is not reported in this study. While flexibility is required of plants, it is not necessarily valued in a single energy market product; therefore, cost of electricity is not an adequate metric for characterizing the value of the operational flexibility that the plant designs in this study address.

The consistent basis for technology comparison originates from NETL's QGESS documents, which provide guidance on topics ranging from how to perform a techno-economic analysis to recommended feedstock specifications and pricing, [3] recommendations for performance modeling assumptions, [1] and guidance for cost estimation methods. [4]

There are several operational models (e.g., two-shifting, peaking, baseload) that a plant can follow and numerous potential market pressures that plants operating today experience, such as:

- Regional variations in operating schemes between the various independent system operators (e.g., choosing to shutdown overnight rather than staying online)
- Regional variations in market structures
- Regional renewables penetration
- State/Regional regulations that affect load profile
- Revenue generation opportunities in the "spot market" that could make a unit's operating profile seem atypical compared to its peers

Each technology has one or more attributes that are appealing for specific market conditions (e.g., net plant efficiency, ramp rate, startup time, minimum load). As there is no technology that is optimal for all applications, the selection will be dependent on the specific market demands and owner preferences.

The results shown for the cases considered in this study are not intended to reflect a specific operational model or all the potential market pressures experienced by plants operating today, or the price consumers can expect to pay. Rather, the primary focus is a repeatable and justifiable method to develop those results, built with industry and vendor input, which ultimately leads to an independent benchmark for the cases considered. This outcome is of significant value to both internal and external stakeholders.

RESULTS ANALYSIS

Exhibit ES-3 shows the performance and environmental profile summary for all cases at full and minimum emissions-compliant load (MECL). The performance of case CC2A-FC is identical to that of CC2A-F and is not presented in this section. The load points are provided for the

[a] The Energy Information Administration [127] indicates relatively high volatility for natural gas, with the Henry hub spot price increasing to $9.34/GJ ($9.85/MMBtu) in August 2022 and decreasing to $1.83/GJ ($1.93/MMBtu) in March 2023. As these fluctuations are not captured by the reported cost uncertainty, the reader should adjust the reported costs if required by the end use of the data.

combustion generator (CG) output – RICE or CTG – relative to the CG nameplate capacity for all cases; the total plant output (CG + steam turbine generator [STG]) is also provided for all combined cycle cases, for reference.

This page intentionally blank

Exhibit ES-3. Performance summary and environmental profile for NG technologies

Case Name	Simple Cycle												Combined Cycle							
	R6A-S		R6A-E		R12A-S		R12A-E		SC1A		SC2A		CC1A-F		CC1A-H		CC2A-F		CC2A-H	
Load[A], % of CG (CG + STG)	100	10[B]	100	1.6[B]	100	10[B]	100	0.8[B]	100	15[B]	100	50[B]	100	41 (49)[B]	100	30 (38)[B]	100	42 (50)[B]	100	30 (38)[B]
PERFORMANCE																				
Nameplate Capacity, MWe	113	113	113	113	113	113	113	113	116	116	105	105	375	375	560	560	751	751	1,124	1,124
Gross Power Output, MWe	113	11	113	2	113	11	113	1	116	18	105	52	375	185	560	211	751	372	1,124	425
Auxiliary Power Requirement, MWe	2	0	2	0	1	0	1	0	3	1	2	1	6	3	8	3	12	7	17	7
Total Auxiliaries, % of Gross Power	1.4%	3.1%	1.4%	9.9%	1.3%	2.6%	1.3%	15.6%	2.3%	8.3%	1.8%	2.7%	1.6%	1.8%	1.5%	1.6%	1.6%	1.8%	1.5%	1.6%
Net Power Output, MWe	111	11	111	2	111	11	111	1	114	16	103	51	369	181	552	208	738	365	1,107	418
Natural Gas Flow rate, lb/hr	40,963	7,733	40,963	1,289	41,077	8,028	41,077	669	44,524	12,977	43,243	28,462	105,936	58,179	152,844	67,252	211,872	116,590	305,688	134,667
HHV Thermal Input, kWt	269,908	50,954	269,908	8,492	270,659	52,895	270,659	4,408	293,370	85,506	284,930	187,540	698,017	383,344	1,007,095	443,125	1,396,033	768,216	2,014,190	887,325
Net Plant HHV Efficiency, %	41.3%	21.5%	41.3%	20.0%	41.0%	20.8%	41.0%	18.0%	38.8%	18.8%	36.0%	27.1%	52.8%	47.3%	54.8%	46.9%	52.9%	47.5%	55.0%	47.1%
Net Plant HHV Heat Rate, Btu/kWh	8,262	15,875	8,262	17,084	8,319	16,391	8,319	18,924	8,805	18,187	9,467	12,572	6,461	7,217	6,225	7,279	6,452	7,178	6,207	7,250
Raw Water Withdrawal, gpm	0	0	0	0	0	0	0	0	56	8	0	0	6	5	7	5	9	7	11	7
Process Water Discharge, gpm	0	0	0	0	0	0	0	0	0	0	0	0	6	5	7	5	9	7	11	7
Raw Water Consumption[C], gpm	0	0	0	0	0	0	0	0	56	8	0	0	0	0	0	0	0	0	0	0
CO_2 Emissions, lb/MMBtu	117	105	117	105	116	110	116	110	119	119	119	119	119	119	119	119	119	119	119	119
CO_2 Emissions, lb/MWh-gross	955	1,608	955	1,608	954	1,765	954	1,765	1,020	1,985	1,106	1,457	754	842	727	850	753	837	725	847
SO_2 Emissions, lb/MWh-gross	0.008	0.015	0.008	0.015	0.008	0.015	0.008	0.015	0.008	0.016	0.009	0.012	0.006	0.007	0.006	0.007	0.006	0.007	0.006	0.007
NOx Emissions, lb/MWh-gross	0.095	0.163	0.095	0.163	0.095	0.177	0.095	0.177	0.061	0.119	0.066	0.087	0.027	0.030	0.026	0.031	0.027	0.030	0.026	0.030
PM Emissions, lb/MWh-gross	0.170	0.542	0.170	0.542	0.172	0.606	0.172	0.606	0.041	0.299	0.107	0.212	0.019	0.039	0.021	0.056	0.019	0.039	0.021	0.056
Hg Emissions, lb/MWh-gross[D]	0.000	0.000	0.000	0.000	0.000	0.000	0.000	0.000	0.000	0.000	0.000	0.000	0.000	0.000	0.000	0.000	0.000	0.000	0.000	0.000
VOC Emissions, lb/MWh-gross	0.265	0.452	0.265	0.452	0.265	0.493	0.265	0.493	0.022	0.042	0.024	0.031	0.011	0.013	0.011	0.013	0.011	0.012	0.011	0.013
CO Emissions, lb/MWh-gross	0.285	0.486	0.285	0.486	0.285	0.529	0.285	0.529	0.095	0.185	0.103	0.136	0.014	0.016	0.014	0.016	0.014	0.016	0.013	0.016

[A] Gross Output
[B] Minimum emissions-compliant load
[C] As all plants in this study are dry cooled, the combined cycle cases utilize an air-cooled condenser
[D] As discussed in Section 2.3, the pipeline natural gas was assumed to contain no Hg

This page intentionally blank

The Environmental Protection Agency (EPA) promulgated a New Source Performance Standard on October 23, 2015, for emissions of CO_2 for new fossil fuel-fired electric utility generating units. [5] The limit set by the regulation was 120 lb CO_2/MMBtu for non-baseload CTs (primarily NGSC) and 1,000 lb-CO_2/MWh-gross for baseload CT (primarily NGCC) plants. There are no limits for RICE CO_2 emissions. The December 2018 proposed update to 111(b) does not impact the previously established emissions limit for NGSC or NGCC plants. [6]

This regulation is always applicable—even during startup and shutdown periods. All cases are compliant with all emissions limits, including CO_2, across all loads assessed.

A graph of the net plant efficiency across the load range for each case is provided in Exhibit ES-4 (HHV basis) and Exhibit ES-5 (LHV basis); the load point percentages are based on the CT/engine output relative to the combustion turbine generator (CTG)/engine nameplate capacity for all cases. These charts assume that the plant is operating at reduced output 100 percent of the year (duty factor of 1).

Exhibit ES-4. HHV net plant efficiency for NG technologies

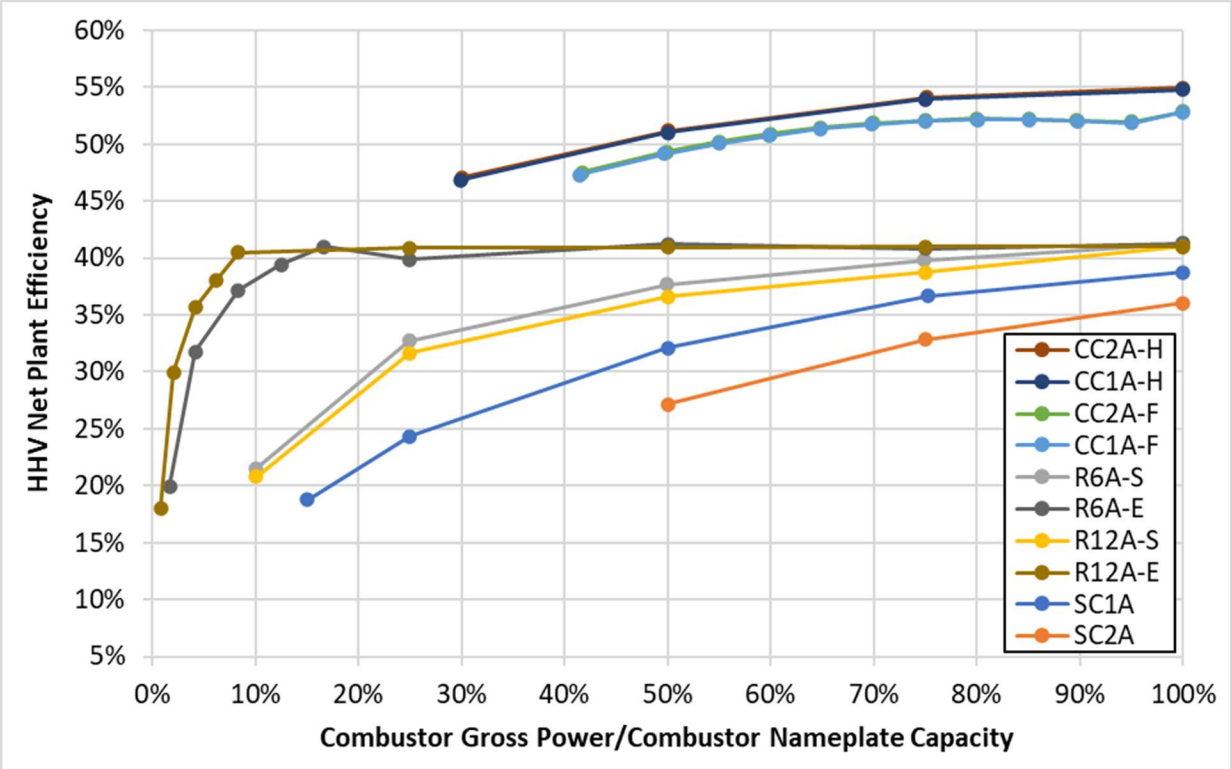

Note: The values of the 2x1 configuration cases (CC2A-H and CC2A-F) overlap with their respective 1x1 configuration cases (CC1A-H and CC1A-F)

Exhibit ES-5. LHV net plant efficiency for NG technologies

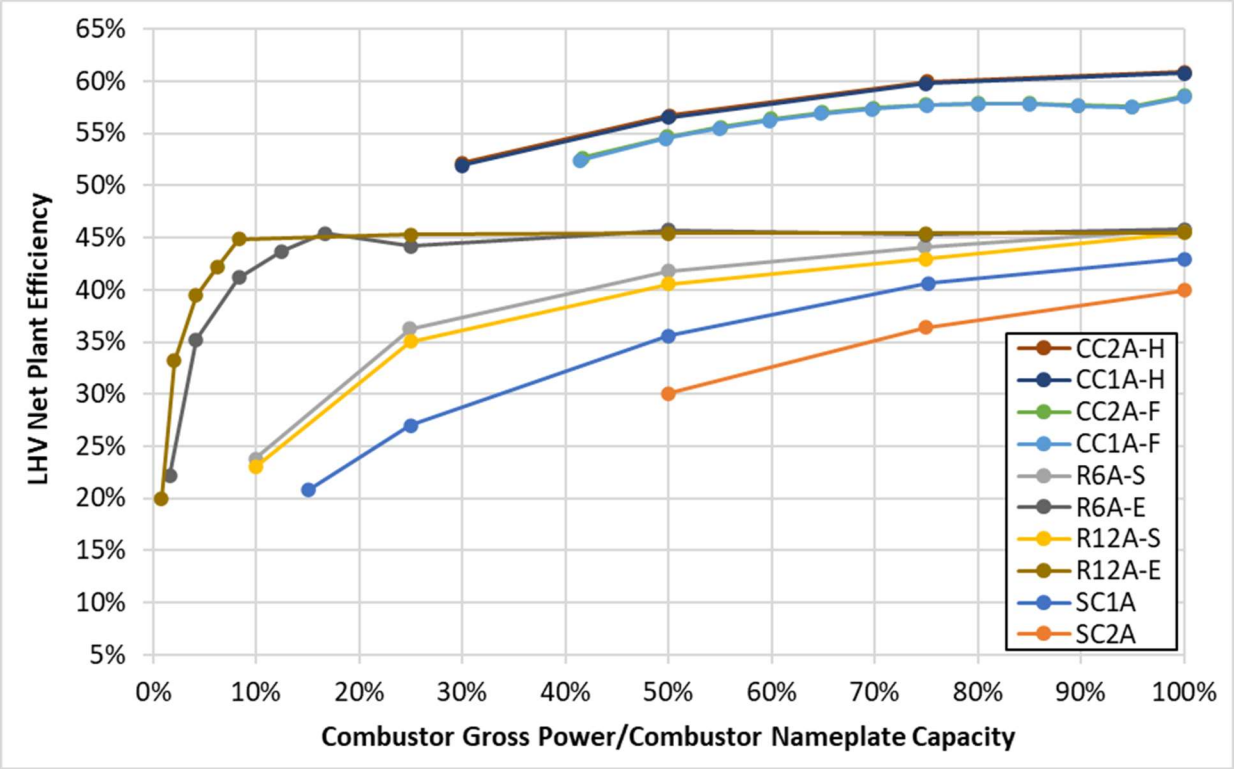

Note: The values of the 2x1 configuration cases (CC2A-H and CC2A-F) overlap with their respective 1x1 configuration cases (CC1A-H and CC1A-F)

While the SC cases have a higher combustion generator (CG) - RICE or CTG – efficiency than the CC cases, the added power output from the steam cycle significantly increases the net plant efficiency of the CC cases.

The initial dip observed in the F-Class cases is the result of the turbine operation being limited by exhaust speed at base load. As parts of the turbine are undersized compared to the advanced compressor capability, the airflow through the inlet guide vanes (IGVs) is limited. At loads down to 90 percent, the F-Class plants are derated by reducing the firing temperature, at loads between 90 and 55 percent, the plant is derated by closing the IGVs. Once the exhaust temperature reaches its limit (approximately 55 percent), the plant is again derated by reducing the firing temperature.

The performance of each individual RICE unit is identical to that of the collection of RICE units used in each case. However, due to static miscellaneous auxiliary loads that remain constant across all load points (e.g., lighting, HVAC, plant control systems), the HHV net plant efficiency is reduced as the number of operating units is reduced. This can be observed by comparing the net plant efficiencies of cases R6A-E and R12A-E at loads below 20 percent to the net plant efficiencies of R6A-S and R12A-S. The overall net plant efficiency of cases R6A-E and R12A-E is the weighted average of the number of operating full load units and the remaining part-load unit.

Exhibit ES-6 presents a cumulative case comparison of total normalized auxiliary load (as a percent of gross output) across the load range; the load point percentages are based on the CG output relative to the CG nameplate capacity for all cases. This chart assume that the plant is operating at reduced output 100 percent of the year (duty factor of 1).

Exhibit ES-6. Normalized auxiliary power consumption cross-case comparison for NG technologies

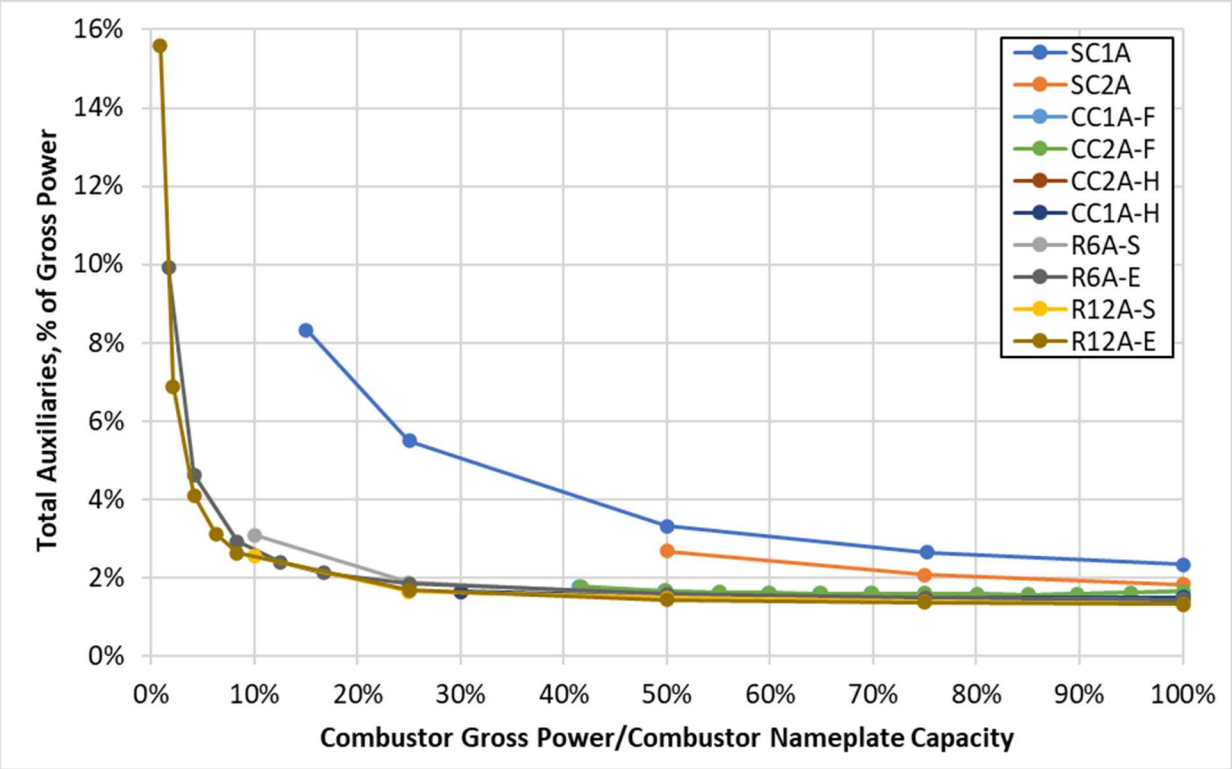

The normalized auxiliary power consumption is comparable for all technologies, with the aeroderivative cases having the largest normalized auxiliary load across all common load ranges, reaching over 8 percent at minimum load. The increased auxiliary load of the aeroderivative cases is primarily due to the inclusion of air attemperation to reduce the exhaust gas temperature below the maximum operating temperature of the SCR.

To allow for meaningful assessment of plant flexibility, several flexibility metrics were identified using published literature; the values achieved for each case are presented in Exhibit ES-7.

Exhibit ES-7. Flexibility metrics for all cases

Case	R6A-S	R6A-E	R12A-S	R12A-E	SC1A	SC2A	CC1A-F	CC1A-H	CC2A-F	CC2A-FC	CC2A-H
Startup Time[A] to Full Load											
Cold Start to Full Load, Minutes	N/A	N/A	N/A	N/A	N/A	N/A	130	130	120	250	120
Warm Start to Full Load, Minutes	10	10	10	10	10	10	50	85	45	140	70
Hot Start to Full Load, Minutes	5	5	5	5	8	5	35	30	32	90	30
Ramp Rate, MW per Minute	67.9	26.4	67.5	30.0	50.2	99.6	40.1	60.0	80.3	80.3	121.4
MECL, % of Full Load	9.7	1.6	9.7	0.8	16	50	49	38	50	50	38
Design Life, Years[B]	30+	30+	30+	30+	30+	30+	30+	30+	30+	30+	30+
Availability/Reliability											
Equivalent Availability Factor, %	93.6	93.6	90.2	90.2	88.7	86.8	83.7	83.0	85.0	85.0	87.8
Equivalent Forced Outage Rate, %	6.4	6.4	24.6	24.6	28.4	37.5	5.1	4.5	3.6	3.6	1.6
Number of Starts, Per Year	Unlim.	Unlim.	Unlim.	Unlim.	Unlim.	Unlim.	300	300	300	300	300
Minimum Run Time,[C,D] Minutes	1	1	1	1	15	15	120	120	120	120	120
Minimum Downtime,[D,E] Minutes	5	5	5	5	30	30	60	60	60	60	60
Planned Outages											
Plant Maintenance Outage(s) (Spring/Fall)											
Frequency, Outages/Year[F]	1-2	1-2	1-2	1-2	1-2	1-2	1-2	1-2	1-2	1-2	1-2
Duration, Days	1-2	1-2	1-2	1-2	1-3	1-3	1-7	1-7	1-7	1-7	1-7
Plant/Combustion Turbine Generator Overhaul(s)											
Frequency, Years Between Overhauls	5	5	5	5	3-6	3-6	4-8	4-8	4-8	4-8	4-8
Duration, Weeks	1-2	1-2	1-2	1-2	4-6	4-6	3-5	3-5	3-5	3-5	3-5
Steam Turbine Generator Overhaul(s)											
Frequency, Years Between Overhauls	N/A	N/A	N/A	N/A	N/A	N/A	4-8	4-8	4-8	4-8	4-8
Duration, Weeks	N/A	N/A	N/A	N/A	N/A	N/A	3-6	3-6	3-6	3-6	3-6

[A] Cold Start – Offline >48 hours; Warm Start – Offline 8-48 hours, normal start for RICE and aeroderivatives; Hot Start – Offline <8 hours, fast start for RICE and aeroderivatives

[B] Non-baseload operation would need to account for additional costs (e.g., increased maintenance, component replacement) to achieve a design life of 30+ years.

[C] Estimate from the time of generator breaker closing to generator breaker opening. Assumed to be limited by CEMS calibration and reporting period. For CC options, minimum run time includes 60-minute allowance for hot start. A longer minimum run time may be required for other start events

[D] The minimum run time and minimum downtime values represent the technical capabilities of each technology. However, from a practical perspective, the minimum run time and minimum downtime may be limited to an hour to provide sufficient sample time for emissions monitoring. From a dispatch modeling perspective, a minimum run time and minimum downtime of one hour would likely be assumed for the simple cycle combustion turbines.

[E] Estimate from the time of generator breaker opening to generator breaker closure. Assume purge and turning gear operation are achieved within one hour

[F] For RICE cases, the annual outages apply to the BOP maintenance and does not include the hours-based maintenance of the RICE units, which may result in additional outages.

The startup times for the CC options are not limited by the CTGs, rather, their startup times are longer due to thermal soaking of the heat recovery steam generator(s) (HRSG) and other lagging balance of plant (BOP) startup procedures. While the RICE and SC options have higher ramp rates as a percentage of their full loads, the CC options often have higher ramp rates on a MW per minute basis. Due to the complexity of the CC plants, they will typically require slightly longer maintenance outages. The reduced startup times enabled in the F-Class cases by the inclusion of miscellaneous fast start equipment and monitoring systems is substantial.

The performance of the individual units within R6A-S and R12A-S are identical to that of those within R6A-E and R12A-E, respectively. However, the engines in R6A-E and R12A-E are turned down one at a time, whereas the engines in R6A-S and R12A-S are turned down simultaneously. By turning all but one engine off and turning the remaining engine down to the MECL, the minimum loads of cases R6A-E and R12A-E is significantly lower than those of cases R6A-S and R12A-S.

CTG outages include hot gas path inspections approximately every 3–4 years lasting 3–4 weeks and major inspections approximately every 6–8 years lasting 5–6 weeks. Rice outages occur more frequently, with maintenance completed on an annual- and hours-basis. Maintenance tasks on the RICE units occur approximately at intervals every 250 hours, 2,000 hours, 4,000 hours, 6,000 hours, 8,000 hours, 16,000 hours, 20,000 hours, 40,000 hours, and 80,000 hours, with outage durations ranging from a few hours to a few weeks. Additional BOP-focused plant maintenance is performed during the 1-2 planned annual maintenance outages. To the extent practical, the RICE unit hours-based maintenance tasks will be completed during the planned annual maintenance outages. RICE major inspections occur approximately every 5 years lasting 1–2 weeks.

STG minor inspections line up with CTG hot gas path inspections and are about 3 weeks; major inspections line up with CTG major inspections and are about 6 weeks.

RICE and SC aeroderivative options have no limit to the number of starts per year as outage maintenance schedule is determined by hours. Combined cycle frame unit options, however, are limited in the number of starts that occur in a year. As the total operating hours decreases, the maximum number of starts also decreases to limit the hours/start ratio. In general, if the ratio of hours per start is above 25 then the units will have an hours-based maintenance schedule, but if the ratio is below 25 then the maintenance schedule would shift to starts-based.[b] Starts-based operation and maintenance (O&M) costs are provided for cases CC1A-F, CC1A-H, CC2A-F, CC2A-FC, and CC2A-H in the Appendix.

The availability and reliability metrics are based on a search of North American Electric Reliability Council (NERC)-Generating Availability Data System (GADS) database for the period 2014–2019. The NERC-GADS database does not allow for searching by specific RICE or CTG model or class; therefore, options had to be searched based on criteria such as frame versus aeroderivative versus RICE, SC versus CC, and plant capacity, etc., to get data for the correct

[b] The basis of the 25 hours/starts ratio is the maintenance intervals set by vendors for combustion turbines. For example, for the cases included in this report, the commercial combustion turbines require a hot gas path inspection at either 32,000 hours or 1,250 starts, whichever occurs first.

group of operating units. Some options had limited data; data on RICE units was particularly limited, as reporting is only mandatory for units greater than 20 MW; as all data was included, outlying data can skew the overall data.

The total overnight cost (TOC) components of each case are presented in Exhibit ES-8 and summarized in Exhibit ES-9.

Exhibit ES-8. Total overnight cost, by component, for all NG technologies

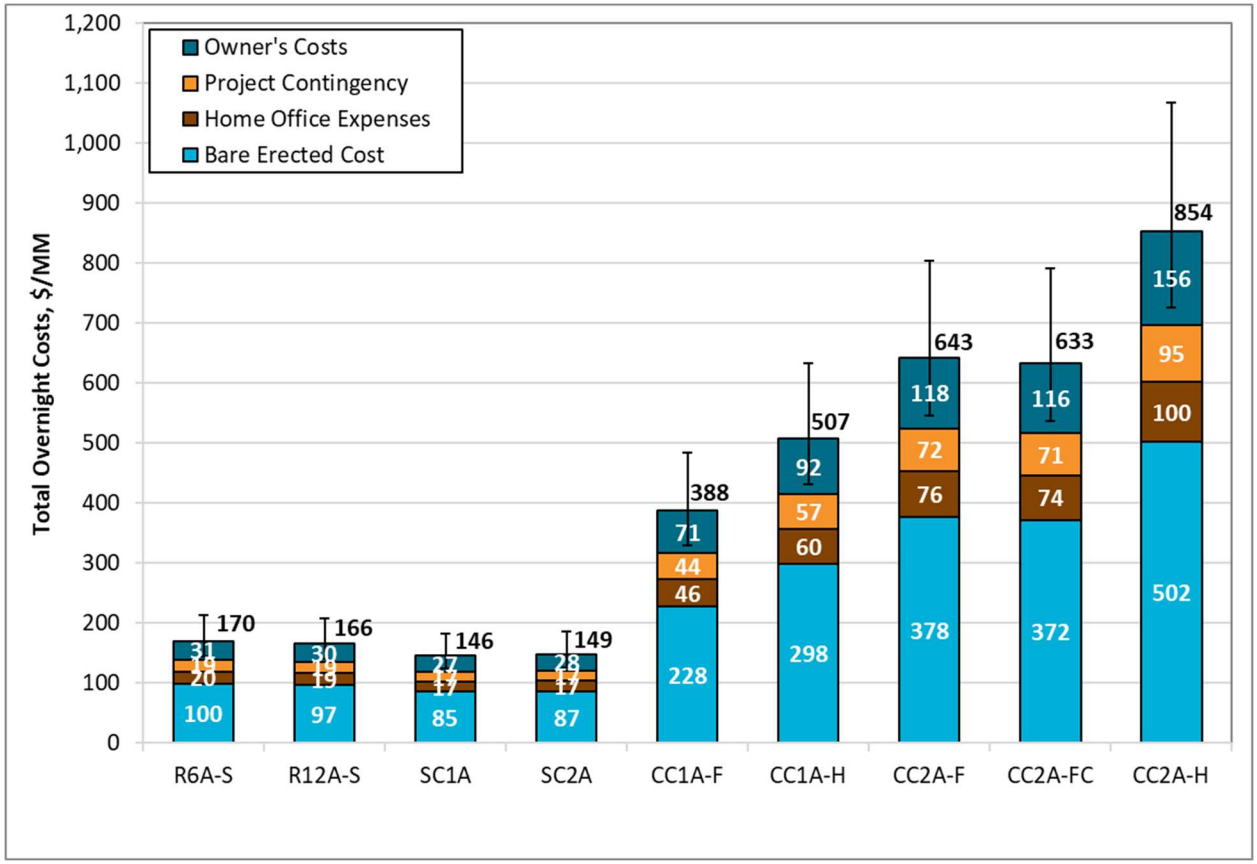

As shown in Exhibit ES-3, the net output of the RICE (R6A-S and R12A-S) and SC aeroderivative (SC1A and SC2A) cases are similar, ranging from 103 MWe to 114 MWe, allowing for reasonable cost comparison. As shown in Exhibit ES-9, the TOC of the RICE plants is 11.7–16.4 percent greater than that of the aeroderivative plants, whereas the fuel costs of the aeroderivative plants are 5.0–8.7 percent greater than the RICE plants. The fixed and variable operation and maintenance (O&M) costs are comparable across technologies, with SC2A having a notably lower (>60 percent) consumable cost, which is driven by the lower uncontrolled NOx emissions of the aeroderivative plants—for Case SC1A, the cost reduction realized by the lower ammonia consumption is overshadowed by the cost of the demineralized water required for the water injected combustors used for NOx reduction.

As cases CC2A-FC and CC2A-F have identical performance, the difference in TOC (1.6 percent) is the result of the inclusion of miscellaneous fast start equipment and monitoring systems.

Exhibit ES-9. Summary of cost components for all NG technologies

Case	Simple Cycle				Combined Cycle				
	R6A-S /R6A-E	R12A-S /R12A-E	SC1A	SC2A	CC1A-F	CC1A-H	CC2A-F	CC2A-FC	CC2A-H
CAPITAL COST									
Total Plant Cost (2018$/MM)	139	136	119	121	317	415	525	517	697
Bare Erected Cost	100	97	85	87	228	298	378	372	502
Home Office Expenses	20	19	17	17	46	60	76	74	100
Project Contingency	19	19	17	17	44	57	72	71	95
Process Contingency	0	0	0	0	0	0	0	0	0
Total Overnight Cost (2018$/MM)	170	166	146	149	388	507	643	633	854
Owner's Costs	31	30	27	28	71	92	118	116	156
O&M COST									
Fixed Costs (2018$/MM)	5	6	5	5	12	14	18	18	23
Variable Costs[A] (2018$/MM)	3 x CF	3 x CF	3 x CF	2 x CF	5 x CF	7 x CF	9 x CF	8 x CF	12 x CF
Fuel Costs[A] (2018$/MM)	36 x CF	36 x CF	39 x CF	38 x CF	92 x CF	133 x CF	184 x CF	184 x CF	266 x CF

[A] The variable and fuel costs are reported on an annual basis at a capacity factor of 100 percent. To calculate these costs for a reduced operation period, multiply the values as indicated. See **Error! Reference source not found.** for the impact of operating at part-load 100% of the year.

The non-fuel variable O&M and fuel costs are presented as a function of plant load on an hourly basis in Exhibit ES-10 and Exhibit ES-11, respectively. These charts assume that the plant is operating at reduced output 100 percent of the year. If annual output is further reduced, the maintenance materials costs would be reduced. For the RICE cases operating in efficiency mode (R6A-E and R12A-E), it was assumed that the maintenance material costs would decrease proportional to the number of units shut down.

Exhibit ES-10. Non-fuel variable O&M costs as a function of plant load for all NG technologies

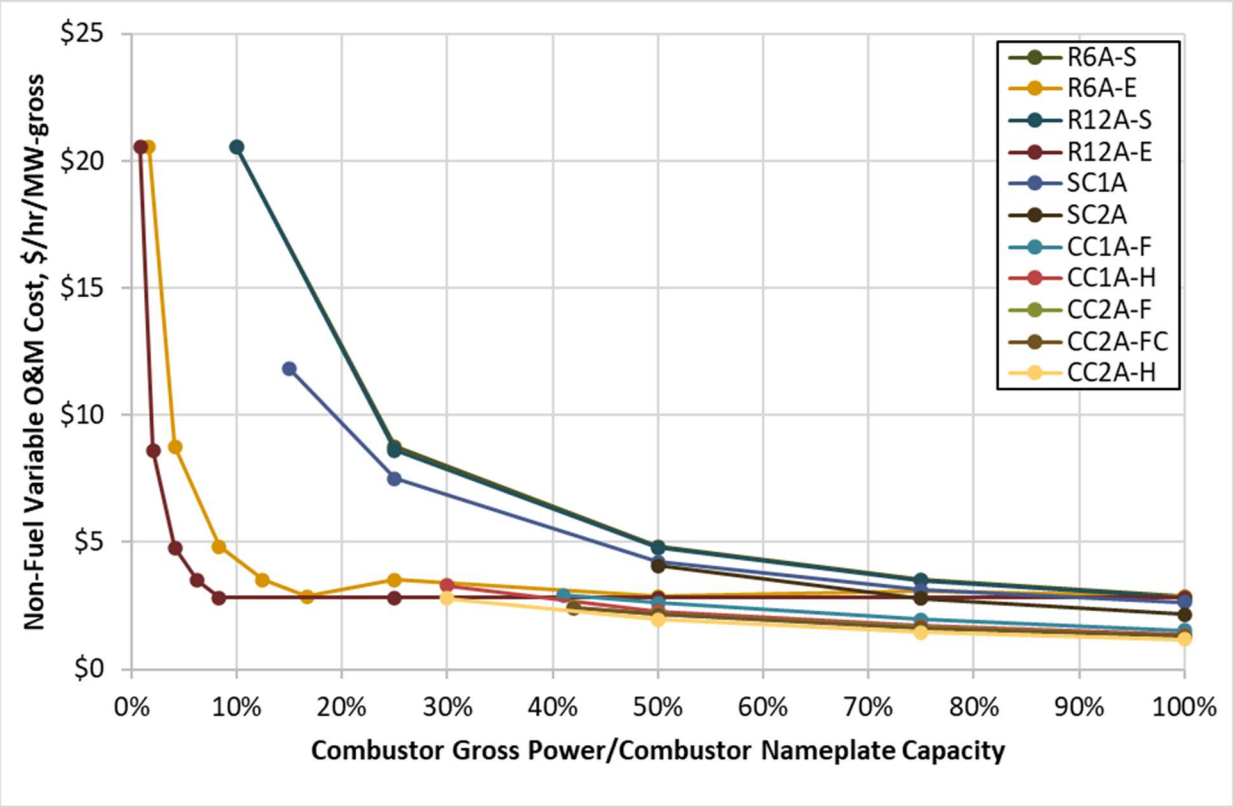

Exhibit ES-11. Fuel costs as a function of plant load for all NG technologies

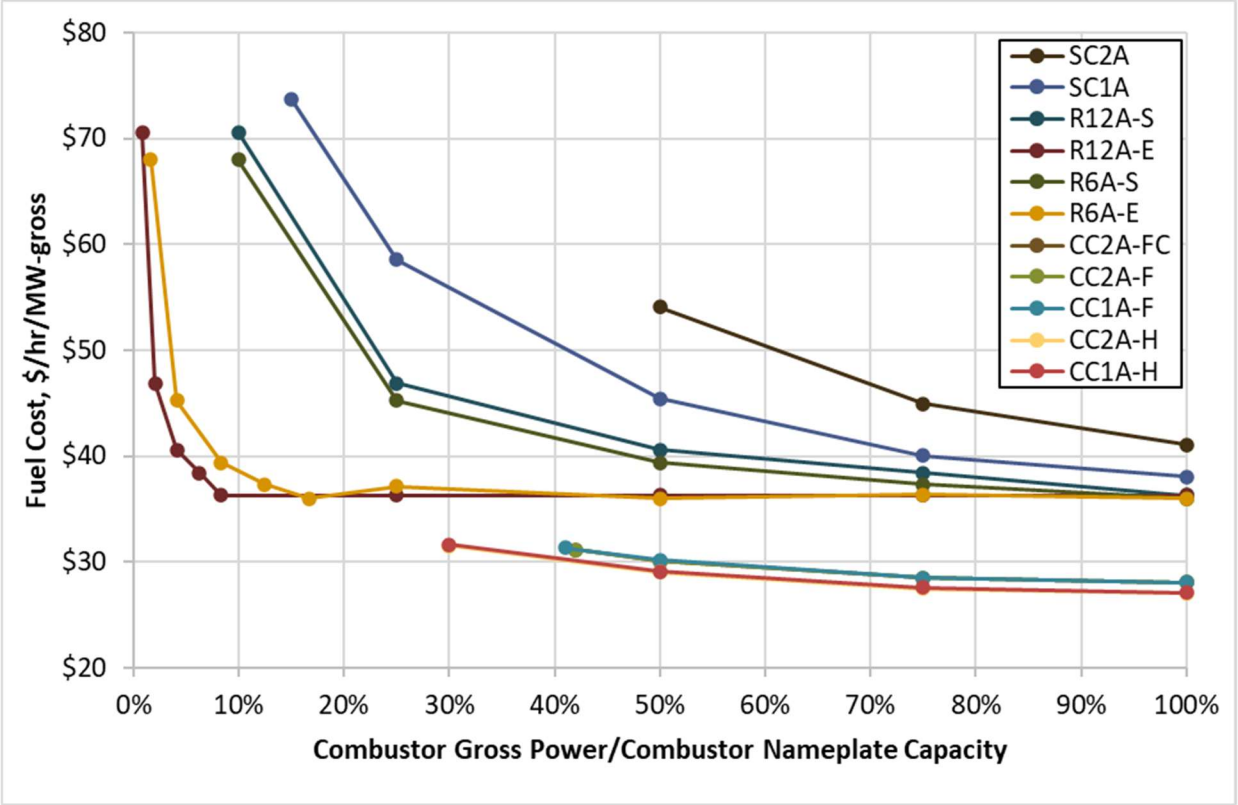

SPECIAL CONSIDERATIONS ON REPORTED COSTS

Capital Costs

The capital cost estimates documented in this report reflect an AACE International (AACE) Class 4 estimate with an uncertainty range of -15/+25 percent. Given recent and plentiful experience with RICE, aeroderivatives, and NGCC plants, the uncertainty ranges for capital cost are well understood.

One of the main objectives of this report is to provide a basis for technology comparison. Given this objective, the level of uncertainty in the capital estimates is acceptable. However, use of the capital estimates in an unintended way could magnify the uncertainty of the cost estimates. The final cost results reported for all cases are not intended to represent a real project-specific cost that would be expected in today's markets. This is due to many factors, including the uncertainty in capital costs, site assumptions, CFs, etc. In all cases, this report intends to represent the next commercial offering and relies on vendor cost estimates for component technologies.

Costs of Mature Technologies and Designs

The cost estimates for plant designs that only contain fully mature technologies, which have been widely deployed at commercial scale (e.g., NGCC power plants without CO_2 capture), reflect nth-of-a-kind (NOAK) on the technology commercialization maturity spectrum. The costs of such plants have dropped over time due to "learning by doing" and risk reduction benefits that result from serial deployments as well as from continuing research and development (R&D). All technologies considered in this study are considered NOAK.

Other Factors

Actual reported project costs for all the plant types are also expected to deviate from the cost estimates in this report due to project- and site-specific considerations (e.g., contracting strategy, local labor costs and availability, seismic conditions, water quality, financing parameters, local environmental concerns, weather delays) that may make construction more costly. Such variations are not captured by the reported cost uncertainty.

Future Cost Trends

Continuing research, development, and demonstration (RD&D) is expected to result in designs that are more advanced than those assessed by this report, leading to costs that are lower than those estimated here.

1 INTRODUCTION

Changes to the United States (U.S.) electricity industry are forcing a paradigm shift in how the nation's generating assets are operated. The increasing demand for renewable and low carbon energy sources presents new challenges for power producers. The variable nature of these new generation sources demands flexible operation of dispatchable assets to maintain grid stability and reliability. Fossil power plants optimized as baseload resources are being increasingly relied upon as load-following resources to support electricity generated from intermittent renewable capacity. These fundamental changes to the operating and economic environment in which large fossil plants function are expected to persist into the next decade and beyond.

Today's power generation industry is also confronted with increasing demand and the retirement of aging generation facilities. Based on Black & Veatch in-house data, utility and power companies plan to retire approximately 50 GW of coal-fired power plants between 2018 and 2027, with 27 GW of retirements potentially occurring between 2019 and 2023.

Black & Veatch in-house data indicated that 2018 was a record-setting year for the retirement of coal-fired generation capacity in the United States, exceeding the previous record year of retirements in 2015. Additionally, the retirement plan timeframes signal that lead-times before closures have shortened as more utilities, municipalities, cities, and states have set net zero or carbon neutrality goals.

The eroding economic environment for coal-based electric power generation has resulted in very few new coal plants coming online in recent years. Public scrutiny over the addition of new coal-fired generating resources, intervening pressure (e.g., from private community organizations, environmental groups, lobbying firms) in the permitting process, and increased environmental regulatory compliance for air, water, and wastewater has increased the challenges a coal-fired power plant must overcome to remain competitive with other electric power-generating technologies.

Trends in capital costs of competing electricity-generating technologies, both natural gas-fueled and renewable options, have added pressure on capital-intensive coal projects. Societal preferences for more reliance on renewable energy sources are causing non-renewable electricity generators to curtail output to accommodate the intermittency of wind and solar power.

When compared to coal plants, natural gas technologies are much better equipped to follow intermittent renewable generation, when starting from an offline state, with faster ramping rates, shorter startup durations, higher efficiency, lower minimum loads, lower water usage, and lower emissions. The aspects of coal-fueled electricity generation that led coal to be the fuel of choice for low-cost power are less relevant today due, in large part to decreasing capital costs of competing electricity-generating technology options, and more frequent dispatch as load-following units.

This study aims to define the features, performance characteristics, and costs for commercial natural gas plants, to serve as a reference for research and development (R&D) efforts focused

on establishing new fossil-power as a competitive part of the nation's energy supply in the coming decades.

1.1 GENERATING UNIT CONFIGURATIONS

Nine commercial power plant configurations (11 total cases) are analyzed in this report. A summary of the configurations is shown in Exhibit 1-1. Components for each plant configuration are described in more detail in the corresponding report sections for each case.

Exhibit 1-1. Case configuration summary

Case[A]	Plant Type	Steam Cycle, psia/°F/°F	Engine/Combustion Turbine	Steam Generation Technology	Notes
R6A-S	RICE	N/A	6 x State-of-the-art 18 MW RICE	N/A	Spinning Mode
R6A-E	RICE	N/A	6 x State-of-the-art 18 MW RICE	N/A	Efficiency Mode
R12A-S	RICE	N/A	12 x State-of-the-art 9 MW RICE	N/A	Spinning Mode
R12A-E	RICE	N/A	12 x State-of-the-art 9 MW RICE	N/A	Efficiency Mode
SC1A	NGSC	N/A	1 x State-of-the-art 100 MW Aero	N/A	Fast Start
SC2A	NGSC	N/A	2 x State-of-the-art 50 MW Aero	N/A	Fast Start
CC1A-F	NGCC	2,400/1,085/1,085	1 x State-of-the-art F-class	HRSG	Fast Start
CC1A-H	NGCC	2,400/1,085/1,085	1 x State-of-the-art H-class	HRSG	Fast Start
CC2A-F	NGCC	2,400/1,085/1,085	2 x State-of-the-art F-class	HRSG	Fast Start
CC2A-FC	NGCC	2,400/1,085/1,085	2 x State-of-the-art F-class	HRSG	Conventional Start
CC2A-H	NGCC	2,400/1,085/1,085	2 x State-of-the-art H-class	HRSG	Fast Start

[A]All plants in this report are assumed to be located at a generic plant site in the midwestern United States

The two RICE options have essentially the same plant gross power of 113 MW. The first option is a bank of twelve 9.4 MW units and the second option is a bank of six 18.8 MW units. These units require cooling that will be achieved with a closed loop cooling system and glycol-to-air heat exchangers.

The two aeroderivative options have gross powers of 116 MW for Case SC1A and 105 MW for Case SC2A. Case SC1A consists of a single aeroderivative configuration whereas Case SC2A is a two-unit aeroderivative configuration, both with compressor intercooling. As Case SC1A is a single annular combustor, dilution via water injection is required to achieve targeted nitrogen oxide (NOx) emissions. Case SC2A does not require water injection as dry low NOx (DLN) burners are used instead of a single annular combustor. Attemperation air is used in both cases to control the exhaust gas temperature to within the requirements of the selective catalytic reduction (SCR).

The NGCC cases have gross power outputs that vary between 375 MW and 1,124 MW because of CT size differences and 1x1 versus 2x1 configurations. Each case includes CT(s) for power production, a heat recovery steam generator (HRSG) to extract heat from the CT exhaust to produce steam, a steam turbine (ST), and an air-cooled condenser (ACC) to reject heat.

The balance of this report is organized as follows:

- Section 2 provides the basis for technical, environmental, and cost evaluations.
- Section 3 describes the natural gas technologies modeled and presents the results for all natural gas cases

2 GENERAL EVALUATION BASIS

For each of the plant configurations analyzed in this report, an Aspen Plus® (Aspen) model was developed and used to generate energy and mass balances, which were, in turn, used to provide a design basis for items in the major equipment list.

The equipment list and mass balances were used as the basis for generating the capital and operating cost estimates. Performance and process limits were based upon published reports, information obtained from vendors and users of the technology, performance data from design/build utility projects, and/or best engineering judgment.

Plant flexibility was evaluated for each case through several flexibility metrics, and values for each flexibility metric were developed based upon industry references and Black & Veatch in-house data.

Capital and operating costs were estimated by Black & Veatch based on simulation results using an in-house database and conceptual estimating models. Costs were further calibrated using a combination of adjusted vendor-furnished data and scaled estimates from previous design/build projects. All costs are reported in December 2018 dollars.

The balance of this section discusses the design basis common to all technologies, as well as environmental targets and cost assumptions used in this report. Technology-specific design criteria are covered in subsequent chapters.

2.1 SITE CHARACTERISTICS

For consistency with Volume 1 of the Fossil Energy Baseline series, all plants in this report are assumed to be located at a generic plant site in the midwestern United States, with site characteristics and ambient conditions as presented in Exhibit 2-1 and Exhibit 2-2. The ambient conditions are the same as International Organization for Standardization (ISO) conditions; the air composition is based on published psychrometric data. [7]

Exhibit 2-1. Site characteristics

Parameter	Value
Location	Greenfield, Midwestern U.S.
Topography	Level
Size, acres	RICE: 20; NGSC: 20; NGCC: 100
Transportation	Rail or Highway
Water	50% Municipal and 50% Ground Water

Exhibit 2-2. Site ambient conditions

Parameter	Value
Elevation, ft	0
Barometric Pressure, psia	14.696
Average Ambient Dry Bulb Temperature, °F	59
Average Ambient Wet Bulb Temperature, °F	51.5
Design Ambient Relative Humidity, %	60
Minimum Temperature for Miscellaneous Cooling Loop Design, °F	-20[A]
Air composition, mass %	
N_2	75.055
O_2	22.998
Ar	1.280
H_2O	0.616
CO_2	0.050
Total	100.00

[A]Design temperature for 45% glycol solution

The average land area for RICE and NGSC aeroderivative cases assumes that about 4.5 acres are required for the plant proper, and the balance provides a buffer of approximately 250 ft to the fence line. The average land area for NGCC cases assumes that about 10 acres are required for the plant proper, leaving a buffer of 0.15 miles to the plant fence line.

In NGCC cases, it was assumed that the ST is enclosed in a turbine building. The engines, CTs, and HRSGs are not enclosed.

The quality of plant makeup water will vary dramatically from source to source (municipal versus ground water), as well as from site to site, and can be expected to vary significantly throughout any given site, particularly if ground water is utilized. In this study, 50 percent of the makeup water to the plant is sourced from a publicly owned treatment works (POTW), with the balance of the makeup water sourced from ground water. The assumed design makeup water composition is provided in Exhibit 2-3.

The makeup water composition reported in Exhibit 2-3 is based on water qualities from actual operations. The design concentration of each constituent is individually representative of a plant configuration comparable to those in this study. However, due to the interaction and interdependencies of each constituent and the multitude of potential species, the makeup water quality cannot be considered representative as a whole. The makeup water quality is intended to inform users of the contaminants likely present, and at what concentrations they may be expected, to facilitate appropriate equipment selection and design.

Exhibit 2-3. Design makeup water quality

Parameter	Ground Water (Range)	POTW Water (Range)	Makeup Water (Design Basis)
pH	6.6–7.9	7.1–8.0	7.4
Specific Conductance, µS/cm	1,096–1,484	1,150–1,629	1312
Turbidity, NTU		<50	<50
Total Dissolved Solids, ppm			906
M-Alkalinity as $CaCO_3$, ppm[A]	200–325	184–596	278
Sodium as Na, ppm	102–150	172–336	168
Chloride as Cl, ppm	73–100	205–275	157
Sulfate as SO_4, ppm	100–292	73–122	153
Calcium as Ca, ppm	106–160	71–117	106
Magnesium as Mg, ppm	39–75	19–33	40
Potassium as K, ppm	15–41	11–21	18
Silica as SiO_2, ppm	5–12	21–26	16
Nitrate as N, ppm	0.1–0.8	18–34	12
Total Phosphate as PO_4, ppm	0.1–0.2	1.3–6.1	1.6
Strontium as Sr, ppm	2.48–2.97	0.319–0.415	1.5
Fluoride as F, ppm	0.5–1.21	0.5–0.9	0.8
Boron as B, ppm	0.7–0.77		0.37
Iron as Fe, ppm	0.099–0.629	0.1	0.249
Barium as Ba, ppm	0.011–0.52	0.092–0.248	0.169
Aluminum as Al, ppm	0.068–0.1	0.1–0.107	0.098
Selenium as Se, ppm	0.02–0.15	0.0008	0.043
Lead as Pb, ppm	0.002–0.1		0.026
Arsenic as, ppm	0.005–0.08		0.023
Copper as Cu, ppm	0.004–0.03	0.012–0.055	0.018
Nickel as Ni, ppm	0.02–0.05		0.018
Manganese as Mn, ppm	0.007–0.015	0.005–0.016	0.009
Zinc as Zn, ppm	0.005–0.024		0.009
Chromium as Cr, ppm	0.01–0.02		0.008
Cadmium as Cd, ppm	0.002–0.02		0.006
Silver as Ag, ppm	0.002–0.02		0.006
Mercury as Hg, ppm	0.0002–0.001		3E-04

[A] Alkalinity is reported as $CaCO_3$ equivalent, rather than the concentration of HCO_3. The concentration of HCO_3 can be obtained by dividing the alkalinity by 0.82

The following design parameters are considered site-specific and are not quantified for this report (allowances for normal conditions and construction are included in the cost estimates):

- Flood plain considerations
- Existing soil/site conditions
- Water discharges and reuse
- Rainfall/snowfall criteria
- Seismic design
- Buildings/enclosures
- Local code height requirements
- Weather delays
- Other local environmental concerns
- Noise regulations

2.2 NATURAL GAS CHARACTERISTICS

The natural gas composition used in this study is presented in Exhibit 2-4. The natural gas properties are from the 2019 revision of the Quality Guidelines for Energy System Studies (QGESS) document "Specification for Selected Feedstocks," [8] including the addition of methanethiol (mercaptan). [9]

Exhibit 2-4. Natural gas composition

Component		Volume Percentage
Methane	CH_4	93.1
Ethane	C_2H_6	3.2
Propane	C_3H_8	0.7
n-Butane	C_4H_{10}	0.4
Carbon Dioxide	CO_2	1.0
Nitrogen	N_2	1.6
Methanethiol[A]	CH_4S	$5.74x10^{-6}$
	Total	100.0
	LHV	**HHV**
kJ/kg (Btu/lb)	47,201 (20,293)	52,295 (22,483)
MJ/scm (Btu/scf)	34.52 (927)	38.25 (1,027)

[A]The sulfur content of natural gas is primarily composed of added mercaptan (methanethiol [CH_4S]) with trace levels of hydrogen sulfide (H_2S) [9]
Note: Fuel composition is normalized, and heating values are calculated using Aspen

The current levelized natural gas price is $4.16/GJ ($4.42/MMBtu) on a higher heating value (HHV) basis, delivered to the Midwest, and reported in 2018 U.S. dollars (USD).[c, d] Fuel costs are

[c] As specified in the 2019 QGESS document on "Fuel Prices for Selected Feedstocks in NETL Studies." [22]

[d] The Energy Information Administration [127] indicates relatively high volatility for natural gas, with the Henry hub spot price increasing to $9.34/GJ ($9.85/MMBtu) in August 2022 and decreasing to $1.83/GJ ($1.93/MMBtu) in March 2023. As these fluctuations are not captured by the reported cost uncertainty, the reader should adjust the reported costs if required by the end use of the data.

levelized over an assumed 30-year plant operational period with an assumed on-line year of 2023.

The total sulfur content of natural gas is typically limited by contract terms and industry practice to between 0.25 and 1.00 gr/100 scf with the average total sulfur content being 0.34 gr/100 scf. [9] For this report, the natural gas was assumed to contain the average value of total sulfur of 0.34 gr/100 scf ($4.71x10^{-4}$ lb-S/MMBtu). It was also assumed that the added mercaptan (CH_4S) was the sole contributor of sulfur to the natural gas. The CH_4S concentration of the natural gas is provided in Exhibit 2-4 as $5.74x10^{-6}$ percent by mole (mol%) ($7.09x10^{-4}$ lb-CH_4S/MMBtu).

2.3 ENVIRONMENTAL TARGETS

2.3.1 Air Emissions Targets

Air pollution control devices for all technologies are required to meet the limits of the New Source Performance Standards (NSPS) for sulfur dioxide (SO_2), NOx, carbon monoxide (CO), and volatile organic compounds (VOCs) and all plants in the study are in compliance at all load points.

The emission limits imposed by NSPS that apply to each technology in this report are provided in Exhibit 2-5.

Exhibit 2-5. NSPS emission limits for SO_2, NOx, CO, and VOC

Pollutant	RICE (lb/MWh-gross)	NGSC (lb/MWh-gross)	NGCC (lb/MWh-gross)
SO_2	N/A	0.90	0.90
NOx	2.96	1.20	0.43
CO	5.91	N/A	N/A
VOC	2.07	N/A	N/A

These regulations apply to RICE technologies that begin construction on or after July 1, 2007 and to NGSC and NGCC technologies that begin construction after February 18, 2005. [10]

Other regulations that could affect emissions limits from a new plant include the New Source Review (NSR) construction permitting process, which entails 1) the Prevention of Significant Deterioration (PSD) [11] process for proposed new sources located in areas that are in attainment with national ambient air quality standards (attainment areas) or unclassifiable areas, which requires installation of emission control technology meeting Best Available Control Technology (BACT), and 2) non-attainment NSR [12]for proposed new sources in areas that at least one applicable pollutant is not in attainment (non-attainment areas), which requires installation of emission control technology meeting Lowest Achievable Emission Rate (LAER). Attainment designations vary by county and can be established only for a specific site location. Based on the Environmental Protection Agency's (EPA) Green Book Non-attainment Area Map, relatively few areas in the midwestern United States are classified as "non-attainment," so the

plant site for this report was assumed to be in an attainment area and thus subject to the BACT limits described below. [13] BACT limits are typically more stringent than the NSPS requirements for all emissions so designing for BACT compliance will also satisfy NSPS emissions limits.

There are no specific federal BACT limits; they vary by technology and are set by a technology and economic analysis on a case-by-case basis. Typical BACT emissions targets are included for each technology type in Exhibit 2-6. These values would be measured at the stack exhaust and are after any emissions control equipment.

Exhibit 2-6. BACT emission limits for NOx, CO, and VOC

Pollutant	RICE (ppmvd@15%O_2)	NGSC (ppmvd@15%O_2)	NGCC (ppmvd@15%O_2)
NOx	5.0	3.0	1.8
CO	16.0	5.0	1.0
VOC	26.0	2.0	1.4

In addition to conducting a BACT analysis, the NSR process requires an ambient air quality impact analysis be performed. This analysis is required to demonstrate compliance with the National Ambient Air Quality Standards. A potential outcome of this analysis may be the requirement to further reduce the emission rate (e.g., installation of additional control technology) to meet the standards.

A final regulation which may require an emission limit are the National Emission Standards for Hazardous Air Pollutants (NESHAP). The 1990 Clean Air Act Amendments revised Section 112 to first require issuance of technology-based standards for major sources and certain area sources of hazardous air pollutant (HAP) emissions, which are codified in 40 CFR Part 63. For the RICE technology, Subpart ZZZZ would be applicable and for the combustion turbine technology, Subpart YYYY may be applicable. These regulations have certain requirements based on whether the facility where the technology is installed is classified as a major source of HAPs (i.e., a site that emits or has the potential to emit any single HAP at a rate of 10 tons or more per year or any combination of HAPs at a rate of 25 tons or more per year) or as an area source (i.e., not a major source).

For the RICE technology, if an area source designation is valid, then there are no additional requirements to meet. Should the site be classified as a major source, then the units would be required to meet a formaldehyde emission limit of 14 ppm or achieve a 93 percent reduction in CO emissions (for spark ignition 4-stroke lean burn engines). For the combustion turbine technology, if an area source designation is valid, then the regulation does not apply. Should the site be classified as a major source, then the units would be required to meet a formaldehyde emission limit of 91 ppbvd.

2.3.2 Water Emissions Targets

EPA issued final Effluent Limitation Guidelines (ELG) and standards for the steam electric power generation point source category in December 2019, to strengthen controls on wastewater discharges. [14] The ELG are national technology-based NSPS derived from data collected from industry. They are intended to provide flexibility in implementation through use of technologies already installed and operating in the power industry. The federal standards established by this rule are the minimum discharge standards. As ELG are enforced under the National Pollutant Discharge Elimination System [15], more stringent water quality-based standards may be established by the local permitting authority; however, these additional requirements were not considered in this report.

Non-chemical metal cleaning wastewater was established as a new wastewater category in the updated ELG. However, new limits were not established for this category; therefore, treatment of this stream has not been evaluated in this report.

Intermittent discharges (e.g., chemical metal cleaning wastewater), and low volume waste (e.g., boiler blowdown), were assumed to be compliant with all applicable regulations with no additional treatment beyond conventional considerations.

To reduce the reliance on geographic water availability, dry cooling was used in all cases, which consume no water to reject heat.

Under the assumptions established in this section, no additional control technology considerations are required for compliance with the ELG rule.

2.3.3 Study Cases

2.3.3.1 RICE

Exhibit 2-7 provides the BACT emissions limits for RICE plants and the control technologies utilized to satisfy the limits.

Exhibit 2-7. BACT limits for RICE cases

Pollutant	RICE (ppmvd@15%O_2)	Control Technology
SO_2	N/A	Low sulfur content fuel
NOx	5.0	SCR
CO	16.0	CO Catalyst
VOC	26.0	CO Catalyst

The RICE cases were designed to achieve approximately 5.0 ppmv NOx emissions (referenced to 15 percent oxygen [O_2]) through the use of good combustion practices and an SCR. [16]

While a state-of-the-art reciprocating engine without emissions control technologies produces NOx emissions above the limit and CO and VOC emissions below the limit shown in Exhibit 2-5, an SCR and CO catalyst were included to ensure the plant met EPA's PSD program by installing

BACT. The SCR system is designed for 95.5 percent NOx reduction and the CO catalyst reduces CO and VOC by 87–91 percent and 29–51 percent, respectively.

The natural gas sulfur content results in SO_2 emissions of 0.008 lb/MWh-gross.

The pipeline natural gas was assumed to contain no mercury (Hg) or hydrochloric acid (HCl), resulting in zero emissions.

The production of PM is a result of system inefficiencies and is not produced or emitted in any significant amount.

2.3.3.2 NGSC

Exhibit 2-8 provides the BACT emissions limits for NGSC plants and the control technologies utilized to satisfy the limits.

Exhibit 2-8. BACT limits for NGSC cases

Pollutant	NGSC (ppmvd@15%O_2)	Control Technology
SO_2	N/A	Low sulfur content fuel
NOx	3.0	DLN burners or water injection and SCR
CO	5.0	CO Catalyst
VOC	2.0	CO Catalyst

The NGSC aeroderivative cases were designed to achieve approximately 3.0 ppmv NOx emissions (referenced to 15 percent O_2). While the single annular combustor used in Case SC1A requires water injection as a diluent to achieve NOx emissions of about 25 ppmvd (referenced to 15 percent O_2), the dry low NOx (DLN) burner used in Case SC2A produces NOx at the same level with no further dilution required. Both cases use an SCR to further reduce the NOx emissions. [16]

While a state-of-the-art aeroderivative CT without emissions control technologies produces NOx emissions below the limit shown in Exhibit 2-5, an SCR and CO catalyst were included to ensure the plant met EPA's PSD program by installing BACT. The SCR system is designed for 88 percent NOx reduction and the CO catalyst reduces CO and VOC by 78–95 percent and 0–34 percent, respectively.

The natural gas sulfur content results in SO_2 emissions of 0.008–0.009 lb/MWh-gross.

The pipeline natural gas was assumed to contain no PM, Hg, or HCl.

2.3.3.3 NGCC

Exhibit 2-9 provides the BACT emissions limits for NGCC plants and the control technologies utilized to satisfy the limits.

Exhibit 2-9. BACT limits for NGCC cases

Pollutant	NGCC (ppmvd@15%O_2)	Control Technology
SO_2	N/A	Low sulfur content fuel
NOx	1.8	DLN burners and SCR
CO	1.0	CO catalyst
VOC	1.4	CO catalyst

The NGCC cases were designed to achieve approximately 1.8 ppmv NOx emissions (referenced to 15 percent O_2) through the use of a DLN burner in the combustion turbine-generator (CTG)—the DLN burners reduce the emissions to about 25 ppmvd [17] [18] (referenced to 15 percent O_2)—and an SCR. [16]

While a state-of-the-art NGCC without emissions control technologies produces NOx emissions below the limit shown in Exhibit 2-5, an SCR and CO catalyst were included to ensure the plant met EPA's PSD program by installing BACT. The SCR system is designed for 92.8 percent NOx reduction and the CO catalyst reduces CO by 83–85 percent. VOC does not require additional reduction, but there will be some passive reduction in the CO catalyst.

The natural gas sulfur content results in SO_2 emissions of 0.006 lb/MWh-gross.

The pipeline natural gas was assumed to contain no PM, Hg, or HCl.

2.3.4 Carbon Dioxide

EPA promulgated an NSPS on October 23, 2015, for emissions of carbon dioxide (CO_2) for new fossil fuel-fired electric utility generating units that begin construction after January 18, 2014. [5] The limit set by the regulation was 120 lb CO_2/MMBtu for non-base load CTs (primarily NGSC) and 1,000 lb-CO_2/MWh-gross for baseload CT (primarily NGCC) plants. There are no limits for RICE CO_2 emissions. The December 2018 proposed update to 111(b) does not impact the previously established emissions limit for NGSC or NGCC plants. [6] The NSPS limits the simple cycle turbine's annual operation to equal the unit's LHV efficiency times 8,760 hours per year (i.e., the simple cycle turbine's capacity factor is limited to the LHV efficiency). [5]

This study assumes that all fuel-based carbon that is combusted (i.e., excluding unburned carbon) is converted to CO_2 and CO in the flue gas. No CO_2 capture systems are included for any plants within this study.

2.4 Raw Water Withdrawal and Consumption

A water balance was performed for each case on the major water consumers in the process. The water demand, representing the total amount of water required for a particular process for each subsystem, was determined and the demand was met with raw water withdrawal.

Raw water withdrawal is defined as the water removed from the ground or diverted from a POTW for use in the plant for all purposes, such as boiler feedwater (BFW) makeup and water

injection for emissions control, depending on the technology examined, and was assumed to be provided 50 percent by a POTW and 50 percent from groundwater.

The difference between water withdrawal and process water discharge is defined as raw water consumption, which is also accounted for as the portion of the raw water withdrawn that is evaporated, transpired, incorporated into products, or otherwise not returned to the water source from which it was withdrawn. Consumption represents the net impact of the process on the water source

The water balances presented in subsequent sections include the water demand of the major water consumers within the process, the amount of raw water withdrawal, the amount of process water returned to the source, and the raw water consumption, by difference.

2.5 CONVENTIONAL VERSUS FAST START

Conventional combined cycle (CC) facility startup durations are constrained by steam cycle equipment limitations, specifically the HRSG and ST temperature ramp capabilities. HRSGs and STs are designed to operate at very high temperatures and pressures and, therefore, are composed of very thick metal alloy components (e.g., steam drums, ST rotors). These thick components can suffer from high thermal stress and shortened service life if they are subjected to large temperature differentials (e.g., 1,000 °F steam across an ambient temperature ST rotor) or rapid temperature ramp rates. HRSG and ST suppliers provide strict temperature ramp rates and temperature differential requirements for their equipment that must be used to define and limit the startup sequence and duration in order to protect the equipment.

HRSGs designed through the middle of the 2010s were generally not capable of allowing CT to start at their maximum capability without incurring significant maintenance impacts. These units required pauses (“holds”) at low CTG loads to “heat soak” their heavy-walled components prior to releasing the unit on sustained ramp rates of typically less than 7 °F per minute, as measured by the high-pressure (HP) drum steam saturation temperature.

Today’s HRSGs can be more robustly designed for the rapid ramp rates of advanced class CTs, which can exceed 50 MW per minute and yield HRSG temperature ramp rates exceeding 30 °F per minute.

Though HRSGs can be designed to allow CTs to start at their maximum capability, STs are not. Cold STs require relatively cool steam, typically in the range of 700 °F, on first admission to the equipment. During the startup sequence, steam temperatures downstream of the HRSG are primarily controlled through two means working in tandem, CTG exhaust temperature control and desuperheating of the generated steam. CTG exhaust temperature control tunes the CTG to minimize the exhaust temperature into the HRSG during the startup sequence, as a cooler exhaust temperature produces cooler steam. Desuperheaters spray water into the steam headers to reduce, or “attemperate,” the steam by reducing the level of superheat above the steam saturation temperature.

Most HRSGs include interstage desuperheaters that are installed between superheater and reheater sections to control the final HRSG exit steam temperatures. As the CT ramps above

very low loads toward the minimum emissions-compliant load (MECL), the CTG exhaust temperature control and HRSG interstage desuperheaters are no longer capable of cooling the steam to the temperatures permitted by a relatively cool ST. The ST becomes a critical constraint on the start time unless the HRSG exit steam temperatures can be further reduced to match the ST steam temperature requirements. In effect, the ST must be 'decoupled' from the CT so that the CT start is not constrained by the steam cycle.

The ST can be decoupled, and its steam temperature requirements met irrespective of CT load by adding terminal desuperheaters (i.e., desuperheaters downstream of the HRSG in the HP and hot reheat steam headers) to cool the HRSG exit steam to the ST requirements.

Decoupling the ST from the CTG/HRSG train allows the CT to ramp to emissions compliance load levels without hold periods in the firing sequence. A no-holds startup sequence is typically referred to as an uninhibited start.

2.6 PLANT CAPACITY

Historically, natural gas-fired electric power plants have demonstrated economies of scale and higher efficiency for larger installations. U.S. installations of natural gas-fired power plants within the past decade have further demonstrated this trend, in addition to an increased demand for the capability to follow highly variable renewable energy sources. The selection of an electric power plant's overall capacity would be based on multiple factors, including but not limited to dispatch of the unit, the market it serves, the current and projected market demand, and how it would play into and support the overall electric power supply system.

For the purposes of this assessment, the plant capacity is not based on any specific installation, but rather a generic installation that could be translated to installations throughout the United States or other global locations.

Based on the items presented above and the natural gas technologies considered, the assumed nominal plant capacity of 100–1,100 MW was chosen for this study. This range of nominal plant sizes is further supported by current industry experience that indicates these plant sizes are well-aligned with the average size of similar plants being installed in global markets and align well with the proven size ranges for RICE, aeroderivative, and NGCC units. Additionally, the number of units in each plant and the overall plant sizes are considered small enough to be applicable to a variety of global regions while being large enough to leverage economies of scale.

2.7 MODELING METHOD

The cases developed for the various plant design bases include steady-state performance at full- and discrete, part load operating points (including MECL). To reflect the expected variances of the plants at various loads, Exhibit 2-10 shows the discrete load points that were established to serve as the basis for performance modeling.

Exhibit 2-10. Discrete load points, percent of plant full load

Case	Full Load	Load 1	Load 2	Load 3	Load 4	Load 5	Load 6	Load 7	Load 8	Load 9	Load 10	Load 11	MECL
R6A-S	100	N/A	N/A	N/A	N/A	75	N/A	N/A	N/A	N/A	50	25	10
R12A-S	100	N/A	N/A	N/A	N/A	75	N/A	N/A	N/A	N/A	50	25	10
SC1A	100	N/A	N/A	N/A	N/A	75	N/A	N/A	N/A	N/A	50	25	15
SC2A	100	N/A	N/A	N/A	N/A	75	N/A	N/A	N/A	N/A	N/A	N/A	50
CC1A-F[A]	100	95	90	85	80	75	70	65	60	55	50	N/A	41
CC1A-H[A]	100	N/A	N/A	N/A	N/A	75	N/A	N/A	N/A	N/A	50	N/A	30
CC2A-F[A]	100	95	90	85	80	75	70	65	60	55	50	N/A	42
CC2A-H[A]	100	N/A	N/A	N/A	N/A	75	N/A	N/A	N/A	N/A	50	N/A	30

[A]The load points are presented as the portion of the CT output relative to the CT's nameplate capacity

RICE and CTG performance is commonly provided at full load, 75 percent, 50 percent, and MECL. Additional points are added if there is a large gap between the 50 percent load point and the MECL. Additional load points were added at 5 percent increments for the F-Class cases (CC1A-F, CC2A-F, and CC2A-FC) to provide additional granularity. The percentages shown in Exhibit 2-10 are the plant loads at these RICE or CTG load points. Full and part load performance was modeled for each case by incorporating performance curves into the Aspen Plus® (Aspen) steady state model.

The plant performance curves were intended to reflect the behavior of key process parameters and equipment at part load operating conditions. They were developed by fitting a line or polynomial curve to the values that were generated for key parameters at each discrete load point.

The values used to generate the plant performance curves were developed based on data from published reports, information obtained from vendors and users of the technology, performance data from design and build utility projects, and/or best engineering judgment.

Because the values were fit to a curve rather than entered discretely into the model, some parameters may differ slightly from the discrete values that are presented in the performance curve tables. Additionally, it should be noted that the behavior of the key process parameters between and beyond the discrete load points is not guaranteed to be accurate.

2.7.1 Low-Load Limiting Factors Overview

The low-load capabilities of the plant design are a critical factor to the operational and economic competitiveness of a natural gas-fired EGU.

The low-load of a plant can be categorized as "sustained" or "achievable." The purpose of this differentiation is to outline the reasonable bounds on low-load operation for the conceptual plant design. Natural gas technologies are typically restricted by emissions requirements and not by technical low-load limitations (sustained load possible down to 0 percent load), but other plant components (pumps, ST, etc.) may have individual low-load limitations that could define the sustained or achievable low-load of the plant. The low-load capabilities of the plant will

factor significantly into the economic analysis and overall viability of the plant. It has been demonstrated in the past that original equipment manufacturers (OEMs) can provide commercial guarantees for full-load points and part load points within standard equipment supply contractual requirements.

Currently, most projects include one or two full load performance guarantee points (typically associated with 100 percent of rated load) and one MECL guarantee point (if desired by the end user). For natural gas technologies, this MECL can vary from about 50 percent load down to the 10–15 percent load range.

Specific constraints exist that will limit any natural gas-fired EGU, regardless of technological capabilities. These operational and regulatory limitations include, but are not limited to, factors such as the EGU's permit structure, industry standards and protocols for prudent unit operation, and site- and owner-specific operational factors (e.g., spinning or efficiency operation philosophy).

The EGUs potential permit structure is not outlined in the scope of this analysis due to the regionally agnostic nature of the plant's location. As an overview, the EGU's permit structure can range from a flexible "Annual Emissions Limit" to a more restrictive "24-Hour Emissions Limit" basis.

The plant would likely target structuring the air emissions permit in a manner that maximizes "operational flexibility" (i.e., preferring a longer-term emissions control basis, such as a cumulative annual basis could allow more frequent shutdowns and startups). However, these factors can only be ascertained accurately once a project site is selected.

2.7.2 Performance Summary Metrics

This section details the methods used to calculate several metrics reported in the performance summaries.

2.7.2.1 RICE Efficiency

The RICE efficiency is calculated by taking the engine power produced and dividing it by the thermal input to the engine. This calculation is represented by the equation:

$$RICEE = \frac{RICEP}{TI}$$

Where:

RICEE – reciprocating internal combustion engine efficiency

RICEP – reciprocating internal combustion engine power, after generator losses

TI – thermal input to engines

The thermal input is calculated by taking the natural gas feed rate and multiplying it by the heating value of the natural gas and converting the units to kW.

2.7.2.2 Combustion Turbine Efficiency

The CT efficiency is calculated by taking the CT power produced and dividing it by the thermal input to the turbines. This calculation is represented by the equation:

$$CTE = \frac{CTP}{TI}$$

Where:

CTE – combustion turbine efficiency

CTP – combustion turbine power, after generator losses

TI – thermal input to turbines

The thermal input is calculated by taking the natural gas feed rate and multiplying it by the heating value of the natural gas and converting the units to kW.

2.7.2.3 Steam Turbine Efficiency

The ST efficiency is calculated by taking the ST power produced and dividing it by the thermal input. This calculation is represented by the equation:

$$STE = \frac{STP}{TI}$$

Where:

STE – steam turbine efficiency

STP – steam turbine power, after generator losses

TI – thermal input

The thermal input is calculated by taking the enthalpy of the flue gas to the HRSG and subtracting the enthalpy of the flue gas exiting the HRSG.

2.7.2.4 Steam Turbine Heat Rate

The ST heat rate is calculated by taking the inverse of the ST efficiency. This calculation is represented by the equation:

$$STHR = \frac{1}{STE} * 3{,}412$$

Where:

STHR – steam turbine heat rate, Btu/kWh

STE – steam turbine efficiency, fraction

2.8 COST ESTIMATING METHOD

Detailed information pertaining to topics such as contracting strategy; engineering, procurement, and construction (EPC) contractor services; estimation of capital cost

contingencies; owner's costs; cost estimate scope; economic assumptions; finance structures; and levelized costs of electricity are available in the 2019 revision of the QGESS document "Cost Estimation Methodology for NETL Assessment of Power Plant Performance." [19] Select portions are repeated in this report for completeness.

Capital Costs:

The capital cost estimates documented in this report reflect an AACE International (AACE) Class 4 estimate with an uncertainty range of -15/+25 percent. Given recent and plentiful experience with RICE, aeroderivatives, and NGCC plants, the uncertainty ranges for capital cost are well understood.

One of the main objectives of this report is to provide a basis for technology comparison. Given this objective, the level of uncertainty in the capital estimates is acceptable. However, use of the capital estimates in an unintended way could magnify the uncertainty of the cost estimates. The final cost results reported for all cases are not intended to represent a real project-specific cost that would be expected in today's markets. This is due to many factors, including the uncertainty in capital costs, site assumptions, capacity factors (CFs), etc. In all cases, this report intends to represent the next commercial offering and relies on vendor cost estimates for component technologies.

Costs of Mature Technologies and Designs:

The cost estimates for plant designs that only contain fully mature technologies, which have been widely deployed at commercial scale (e.g., NGCC power plants without CO_2 capture), reflect nth-of-a-kind (NOAK) on the technology commercialization maturity spectrum. The costs of such plants have dropped over time due to "learning by doing" and risk reduction benefits that result from serial deployments as well as from continuing R&D. All technologies considered in this study are considered NOAK.

Other Factors:

Actual reported project costs for all the plant types are also expected to deviate from the cost estimates in this report due to project- and site-specific considerations (e.g., contracting strategy, local labor costs and availability, seismic conditions, water quality, financing parameters, local environmental concerns, weather delays) that may make construction more costly. Such variations are not captured by the reported cost uncertainty.

Future Cost Trends:

Continuing research, development, and demonstration (RD&D) is expected to result in designs that are more advanced than those assessed by this report, leading to costs that are lower than those estimated here.

2.8.1 Capital Costs

As illustrated in Exhibit 2-11, this report defines capital cost at five levels: BEC, EPCC, TPC, and TOC. BEC, EPCC, TPC, and TOC are "overnight" costs and are expressed in "base-year" dollars. The base year is the first year of capital expenditure.

The Bare Erected Cost (BEC) comprises the cost of process equipment, on-site facilities and infrastructure that support the plant (e.g., shops, offices, labs, road), and the direct and indirect labor required for its construction and/or installation. The cost of EPC services and contingencies are not included in BEC.

The Engineering, Procurement and Construction Cost (EPCC) comprises the BEC plus the cost of services provided by the EPC contractor. EPC services include detailed design, contractor permitting (i.e., those permits that individual contractors must obtain to perform their scopes of work, as opposed to project permitting, which is not included here), and project/construction management costs.

The Total Plant Cost (TPC) comprises the EPCC plus project and process contingencies.

The Total Overnight Cost (TOC) comprises the TPC plus all other overnight costs, including owner's costs. TOC does not include escalation during construction or interest during construction.

Exhibit 2-11. Capital cost levels and their elements

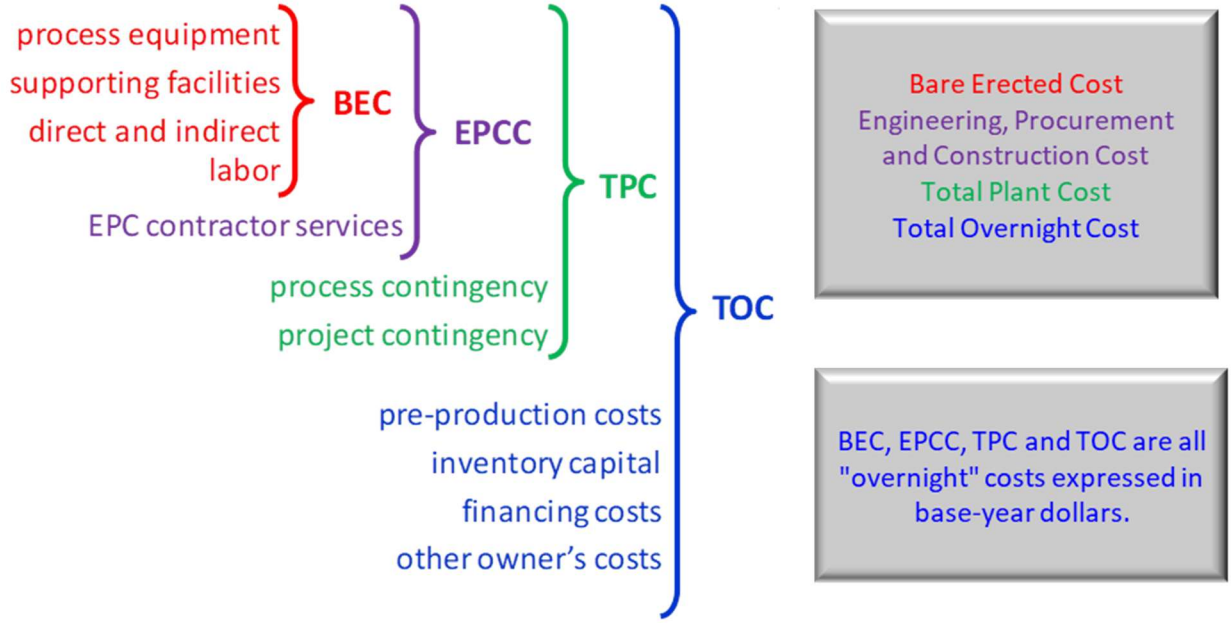

2.8.1.1 Cost Estimate Basis and Classification

The TPC and operation and maintenance (O&M) costs for each of the cases in the report were estimated by Black & Veatch using an in-house database and conceptual estimating models. Costs were further calibrated using a combination of adjusted vendor-furnished data and scaled estimates from previous design and build projects.

2.8.1.2 System Code-of-Accounts

The costs are grouped according to a process- and system-oriented code of accounts. This type of code-of-account structure has the advantage of grouping all reasonably allocable

components of a system or process, so they are included in the specific system account. This would not be the case had a facility, area, or commodity account structure been chosen instead.

2.8.1.3 Estimate Scope

The estimates represent a complete power plant facility on a generic site. The plant boundary limit is defined as the total plant facility within the "fence line," including water supply system, but terminating at the high voltage side of the main power transformers.

2.8.1.4 Capital Cost Assumptions

Black & Veatch developed the capital cost estimates for each plant using the company's in-house database and conceptual estimating method. This database and approach are maintained by Black & Veatch as part of a commercial power plant design base of experience for similar equipment in the company's range of power and process projects. A reference bottom-up estimate for each major component provides the basis for the estimating models.

Other key estimate considerations include the following:

- Labor costs are based on Midwest, Merit Shop. The estimating models are based on a U.S. Gulf Coast location and the labor cost has been factored to a Midwest location. Labor cost data were sourced from recent projects and proprietary Black & Veatch in-house references and cost databases.
- The estimates are based on a competitive bidding environment, with adequate skilled craft labor available locally.
- Labor is based on a 50-hour work-week (5-10s). No additional incentives such as per-diem allowances or bonuses have been included to attract craft labor.
- While not included at this time, labor incentives may ultimately be required to attract and retain skilled labor depending on the amount of competing work in the region, and the availability of skilled craft in the area at the time the projects proceed to construction.
- The estimates are based on a greenfield site.
- The site is considered to be Seismic Zone 1, relatively level, and free from hazardous materials, archeological artifacts, or excessive rock. Soil conditions are considered adequate for spread footing foundations. The soil bearing capability is assumed adequate such that piling is not needed to support the foundation loads.
- Engineering and Construction Management are estimated based on Black & Veatch's historical experience in designing and building power projects. The cost, as a percentage of BEC, is 20 percent for all technologies in this study. The percentage was selected such that the final total cost calculated is representative of Black & Veatch's historical engineering/construction management costs for similar plant types. These costs consist of all home office engineering and procurement services as well as field construction management costs. Site staffing generally includes a construction manager, a resident

engineer, a scheduler, and personnel for project controls, document control, materials management, site safety, and field inspection.

2.8.1.5 Price Fluctuations

During the writing of this report, the prices of equipment and bulk materials fluctuated as a result of various market forces. Some reference quotes pre-dated the 2018-year cost basis while others may be considered more historical. All vendor quotes used to develop these estimates were adjusted to December 2018 dollars accounting for the price fluctuations. In-house monthly/quarterly escalation rates provided by Black & Veatch were used as needed for these adjustments. While these overall indices are nearly constant, it should be noted that the cost of individual equipment types may still deviate from the December 2018 reference point. For these escalation rates and other rates used for cost modifications, Black & Veatch utilized existing in-house data based on current construction and procurement industry sources that provide industry-based guidelines.

2.8.1.6 Cross-Comparisons

In technology comparison studies, the relative differences in costs are often more significant than the absolute level of TPC. This requires cross-account comparison between technologies to review the consistency of the direction of the costs.

In performing such a comparison, it is important to reference the technical parameters for each specific item, as these are the basis for establishing the costs. Scope or assumption differences can quickly explain any apparent anomalies.

There are a number of cases where differences in design philosophy occur, such as

- RICE and aeroderivatives have much smaller scope (no HRSG, steam turbine generator (STG), condenser, etc.) than NGCC options.
- RICE options have many more units than other options.
- These options have large variations in size and output. Larger options will tend to have some advantages due to economies of scale.

2.8.1.6.1 Process Contingency

This report contains no emerging technologies and, therefore, applies no process contingencies. Future revisions may include technologies that necessitate the inclusion of process contingencies at the appropriate subsystem levels to account for expected but undefined costs, which can be a challenge for emerging technologies.

2.8.1.7 Owner's Costs

Detailed explanation of the owner's costs is available in the QGESS document "Cost Estimation Methodology for NETL Assessment of Power Plant Performance." [4] Owner's costs are split into three categories: pre-production costs, inventory capital, and other costs.

Pre-production allocations are expected to carry the specific plants through substantial completion, and to commercial operation. Substantial completion is intended to represent the transfer point of the facility from the EPC contractor (development entity) to the end user or owner, and is typically contingent on mutually acceptable equipment closeout, successful completion of facility-wide performance testing, and full closeout of commercial items.

Two examples of what could be included in the "other" owner's costs are rail spur and switch yard costs.

Switch yard costs are dependent on voltage, configuration, number of breakers, layout, and air-insulated versus gas-insulated. As a rule of thumb, a 345-kV switchyard (air-insulated, ring bus) would cost roughly $850,000 per breaker.

On-site only rails (excludes long runs) would be expected to cost in the range of $850,000 to $950,000 per mile (relatively flat level terrain) plus the costs of any switches or turnouts (approximately $50,000 each) and road crossings (approximately $300 per linear foot).

2.8.2 Operation and Maintenance Costs

The production costs or operating costs and related maintenance expenses (O&M) pertain to those charges associated with operating and maintaining the power plants over their expected life. These costs include

- Operating labor
- Maintenance – material and labor
- Administrative and support labor
- Consumables
- Fuel
- Waste disposal

There are two components of O&M costs: fixed O&M, which is independent of power generation, and variable O&M, which is proportional to power generation. Taxes and insurance are included as fixed O&M costs, totaling 2 percent of the TPC.

2.8.2.1 Operating Labor

Operating labor cost was determined based on the number of operators required for each technology. The average base labor rate used to determine annual cost is $38.50/hour. The associated labor burden is estimated at 30 percent of the base labor rate.

2.8.2.2 Maintenance Material and Labor

Maintenance cost was evaluated on the basis of relationships of maintenance cost to initial capital cost. This represents a weighted analysis in which the individual cost relationships were considered for each major plant component or section.

2.8.2.3 Administrative and Support Labor

Labor administration and overhead charges are assessed at a rate of 25 percent of the burdened O&M labor.

2.8.2.4 Consumables

The cost of consumables, including fuel, is determined based on individual rates of consumption, the unit cost of each specific consumable commodity, and the plant annual operating hours.

Due to the expected operational profile of the plants developed in this study, the variable operating costs (consumables, waste disposal, by-products, and fuel) are expressed as a function of average annual capacity factor. It should be noted that these calculations assume the plant is operating at 100 percent output during dispatch; the calculations do not compensate for the efficiency penalty that is experienced during low load operation.

Formulas for calculating major consumables such as fuel and sorbent were taken from technology-specific energy and mass balance diagrams developed for each plant application. Other consumables were evaluated based on the quantity required using reference data.

The quantities for initial fills and daily consumables were calculated on a 100 percent operating capacity basis. Initial fills of the consumables, fuels and chemicals, may be accounted for directly in the O&M tables or included with the equipment pricing in the capital cost. Where applicable, the O&M tables state where this cost is included on a case-by-case basis.

2.8.2.5 Waste Disposal

Waste quantities and disposal costs are determined and evaluated similarly to the consumables. Non-hazardous waste is disposed of at a rate of $41.90/tonne ($38.00/ton). Hazardous waste is disposed of at a rate of $88.21/tonne ($80/ton).

2.8.2.6 Co-Products and By-Products

No co-products or by-products are produced.

2.8.3 Construction Modularization

2.8.3.1 Modularization Limitations – Shipping Constraints

Shipping constraints are outlined in Exhibit 2-12 and are the most prominent limitation to modularization potential of equipment. Road, rail, and barge/ship delivery methods are the most common delivery methods for plant equipment. In extreme conditions, packages and materials have been air-lifted into sites by means of cargo- or heavy-freight helicopters designed for such packages.

Exhibit 2-12. Shipping logistics size and weight constraints

Shipment Method[A, B]	Typical Size Constraints[C]	Typical Weight Constraints
Over-Road Shipments	Height (H): 20 feet Width (W): 15–20 feet Length (L): 50–100 feet	Less than 40 tons[D]
Rail Shipments	H: 20 feet; W: 15 feet; L: 35 feet	Less than 715 tons
Ship/Barge Shipments[A]	H: 50 feet; W: 20 feet; L: 50–100 feet	Over 1,000 tons
Aerial-Cargo Shipments	H: 20 feet; W: 15–20 feet; L: 50 feet	Less than 15 tons

[A] Ship/barge shipments reduce the amount of over-road shipment time and complications; however, packages that are transported a portion of the distance to site via barge/ship would still be subject to road restrictions and limitations for the balance of the transport to site

[B] Shipping logistics constraints provided in this table are demonstrative and provided for discussion purposes; the outlined constraints do not account for route-specific transportation considerations (including studies and analyses) that would be required to be completed prior to shipment

[C] H/W/L parameters provided are intended to be representative

[D] 1 ton = 2,000 pounds

2.8.3.2 Modularization Opportunity Areas

Highly modularized plant designs are typically seen in NGCC, aeroderivatives, oil and gas industry applications, and renewable energy generation applications (e.g., solar, battery storage). Specific modular component savings were not considered in the capital cost estimates for this study.

Construction modularization optimization was interpreted in the sense of identifying areas to maximize shop fabrication with the goal of reducing on site construction costs and schedule.

The assessment of modularization potential was intended to analyze the degree to which modularization (e.g., offsite fabrication of equipment or sub-systems, or laydown area preassembly, in whole or part) and associated construction time and/or cost savings may apply to the plants evaluated in this study. Exhibit 2-13 outlines areas where, based on Black & Veatch experience and industry trends, high- and low-modularization potential exists within the evaluated plant configurations.

Exhibit 2-13. High/low modularization potential comparisons

High-Modularization Potential	Low-Modularization Potential
• Supporting skid equipment (e.g., lubricating oil equipment, fuel gas pressure reduction, jacking oil equipment, reagent preparation and conditioning skids, and emissions monitoring equipment) • HRSG economizer tube assemblies • HRSG tubes and panels[A] • HRSG superheat and reheat tube assemblies • Small- or moderate-sized pumps • Electrical and controls equipment (e.g., motor control centers and pre-engineered programmable logic controller buildings)	• Large-volume civil and structural works (e.g., foundations, rebar, and piles) • Structural steel members • Flue gas ductwork • Stack • Steam turbine

High-Modularization Potential	Low-Modularization Potential
• Low-volume civil and structural works (e.g., small retaining walls) • Site security logistics and tollgates (e.g., craft turnstiles depot and security checkpoints) • Containerized contractor equipment storage onsite • Air cooled condenser	

[A] Standard industry erection practices for large NGCC units already includes a high level of onsite fabrication of boiler tube panels at grade

Due to typical equipment manufacturer requirements and design, it is unlikely any of the major pump categories (e.g., boiler feed pumps, condensate pumps) would be shipped with the housing components and rotor components pre-assembled. The housing components and supporting skid assemblies typically ship separately from the rotor and shaft assembly facility, the latter of which has more strict material protection and shipping preparation requirements.

2.8.3.3 Major Equipment Category Suppliers

A focus of this study was to assess appropriate commercial offerings of reputable equipment suppliers that pertain to the plant configuration. The term "commercial offering" is intended to capture processes or technologies that are currently offered for sale by the reputable equipment supplier, or design firm (including but not limited to either as discrete equipment, technology licenses, or design services), in addition to the willingness of that same entity to provide performance guarantees with industry-acceptable terms and conditions.

The following suppliers outlined in Exhibit 2-14 are pre-approved Black & Veatch suppliers for the large equipment packages that would be included in the commercial plant configuration. Pre-approved Black & Veatch suppliers have been technically assessed and meet the financial criteria as set forth by Black & Veatch's global equipment procurement department. While this list is a representation of the common suppliers identified for the specific equipment categories outlined, other suppliers that are equally suitable may be available.

Exhibit 2-14. Major equipment category suppliers

Equipment	Suppliers	
Combustion Turbine	• GE • Solar	• Siemens • MPS
Reciprocating Internal Combustion Engine	• Jenbacker • Kawasaki • Caterpillar • Hyundai	• Wärtsilä • MAN • Cummins • Rolls-Royce
Heat Recovery Steam Generator	• Nooter-Eriksen • Alstom • Babcock & Wilcox	• Vogt • Doosan • Foster Wheeler
BFW Pump	• Ebara Machinery	• Kirloskar Brothers Limited

Equipment	Suppliers	
	• Flowserve • Gould's • Hyundai	• KSB Incorporated • Sulzer • Torishima Pump
Steam Turbine Generator	• Doosan Heavy Industries • Dresser Rand • Fuji • GE	• Mitsubishi - Hitachi • Siemens • Toshiba
ACC	• Babcock & Wilcox SPIG • Beijing Longyuan Cooling • Dongfang Steam Turbine Works • Eneixo US • Evapco BLCT Dry Cooling • GEI Industrial	• Holtec International • Kelvion • KNM Group • Research Cottrell Dry Cooing • SPX Dry Cooling
Deaerator	• Kansas City Deaerator Company • Sterling Deaerator Company	• Stork
Medium Voltage Motors	• ABB • Baldor • General Electric • Hitachi • Hyundai • Regal Beloit • Reliance	• Siemens • TECO - Westinghouse Motor Co. • TMEIC • WEG • Marathon • HICO • Laurence Scott
SCR System	• Andritz Environmental Solutions • Babcock & Wilcox • Babcock Power • Braden Manufacturing • Foster Wheeler	• Fuel Tech • Hitachi • IHI • LP Amina
SCR Catalyst	• ASM • BASF • Criterion • Cormetech	• Euro • Johnson Matthey • SUD Chemie • MHPS

2.8.4 Startup and Shutdown Costs

2.8.4.1 Methodology

Costs associated with startup and shutdown were calculated for all cases. Costs were calculated from start to synchronization and from start to full load for fast and normal starts for RICE and aeroderivative cases and for cold, warm, and hot starts for combined cycle cases. For shutdown, costs were calculated from full load to desynchronization and from full load to turning gear.

Variable O&M costs were weighted throughout the startup or shutdown event to determine the operating costs accumulated during each event. House energy consumed during the event was calculated in the same way, with the cost of energy consumed before auxiliary loads could be

covered by the engines/turbines power output assumed to be $60/MWh. The same energy cost was assumed for the energy sold to the grid during the startup or shutdown duration.

Neither the startup nor the shutdown cost estimates include maintenance impacts. While maintenance impacts for RICE and aeroderivative cases should not be significant, they could add significant costs to the combined cycle frame options depending on the number of annual starts.

The startup and shutdown cost estimates for the RICE and aeroderivative cases are based on extremely short startup and shutdown times and may have a larger variance compared to the combined cycle options due to rounding and uncertainty in the fuel consumption and plant performance estimates during these short durations.

Startup costs for the RICE cases are based on all units starting simultaneously—there is no difference between spinning mode and efficiency mode.

Fast start combined cycle cases (CC1A-F, CC1A-H, CC2A-F, and CC2A-H) require the use of an auxiliary boiler during warm and cold starts, whereas, for hot starts and for the conventional start combined cycle case (CC2A-FC), no auxiliary boiler is required.

The startup times for the 1x1 combined cycle cases have a longer duration than the corresponding 2x1 cases. The combustion turbines for each plant will reach full load at approximately the same time; however, the smaller steam turbines in the 1x1 cases typically require a slower load ramp than the larger steam turbines used in the 2x1 cases. Specific OEM requirements for the integration of their HRSG or STG with the CTG during startup can have a significant impact on the overall duration and cost of the event.

The cold start for Case CC2A-FC shows lower natural gas heat input, variable cost, and house energy consumed than Case CC2A-F. While the duration of the cold start for the conventional start option is much longer, the majority of this duration is a low load warming hold compared to the higher average load of the fast start option. In addition, CC2A-FC does not require auxiliary boiler usage during startup.

There are additional startup cost considerations that are not included in this cost analysis that would affect the plant. Plants with high cycling or increased frequency of large load swings can have higher O&M costs, more frequent outages, decreased reliability, and a higher probability of component fatigue failures. The costs associated with these potential issues are difficult to predict and may take several years to materialize in the plant. More frequent inspections, real time performance monitoring, and designing for cycling can help to mitigate these risks.

2.8.4.2 Historical Context

Black & Veatch considered data from OEMs and several in-house references to determine normal startup and shutdown curves, durations, and procedures. These references were used to tune each case and ensure that their startup and shutdown conditions are typical and within the normal range for actual industry references.

These costs should be considered representative, and would vary based on the final plant design, fuel cost, and requirements of OEMs, etc.

2.9 ASSESSMENT METRICS

Several metrics were identified to allow for assessment of the overall "flexibility" of each case. Exhibit 2-15 presents each of the assessment metrics that were identified from the literature review. The metrics are divided into two categories: 1) flexible plant metrics and 2) EGU competitive plant metrics. The flexible plant metrics are those metrics that relate directly to the characterization of a flexible plant. Competitive metrics are other key metrics often considered when performing dispatch modeling to evaluate the economic competitiveness of an EGU project.

Exhibit 2-15. Assessment metric characterization

Assessment Metric
Flexible Metrics
Startup Time to Full Load, Minutes Cold Start to Full Load, Minutes Warm Start to Full Load, Minutes Hot Start to Full Load, Minutes
Ramp Rate, MW per Minute
Minimum Stable, Emissions-Compliant, Load, % Load
EGU Competitive Metrics
Design Life, Years
Full Load NPHR, Btu/kWh, HHV, [Net Plant Thermal Efficiency, percent (HHV)]
Intermediate Load NPHR, Btu/kWh (HHV), [Net Plant Thermal Efficiency, % (HHV)]
MECL NPHR, Btu/kWh (HHV), [Net Plant Thermal Efficiency, percent (HHV)]
Availability/Reliability Industry Average, NERC-GADS Data: Equivalent Availability Factor, % Equivalent Forced Outage Rate, %
Planned Outages Plant Maintenance Outage (Spring/Fall) Frequency, Outage/Year Duration, Days Plant/Combustion Turbine Generator Overhaul Frequency, Years/Overhaul Duration, Weeks

Assessment Metric
Steam Turbine Generator Overhaul Frequency, Years/Overhaul Duration, Weeks
EPC Capital Cost, $/kW
Operation and Maintenance Plant Staff Requirements, No. of Personnel Fixed O&M Costs, $/kW-year Non-Fuel Variable O&M Costs, $/MWh
Number of Starts, per Year

2.9.1 Startup Time

Startup time for a natural gas-fired EGU is defined by the number of hours required to bring a unit to full-load from being offline. Unlike simple cycle (SC) plants, the startup time for a CC plant is dependent on the number of hours it has been offline and the temperature to which it has been allowed to cool down. To account for this, startups are commonly defined as being either "cold," "warm," or "hot" starts. These categories are delineated by the number of hours a unit has been offline, as summarized below: [20]

- Cold Start – Offline greater than 48 hours
- Warm Start – Offline between 8 and 48 hours
- Hot Start – Offline less than eight hours

To minimize thermal stresses a unit's equipment experiences during startup, the rate at which components can warm up (°F per min) are typically limited based on recommendations from the HRSG and/or ST OEM. Actual startup times would be based on project-specific equipment and could vary. An example NGCC plant warm startup curve is provided in Exhibit 2-16. This curve provides the composite startup for the plant, taking into consideration the startup time for the CTG, STG, all other major plant components, and startup sequence requirements.

Exhibit 2-16. Example NGCC power plant startup curve

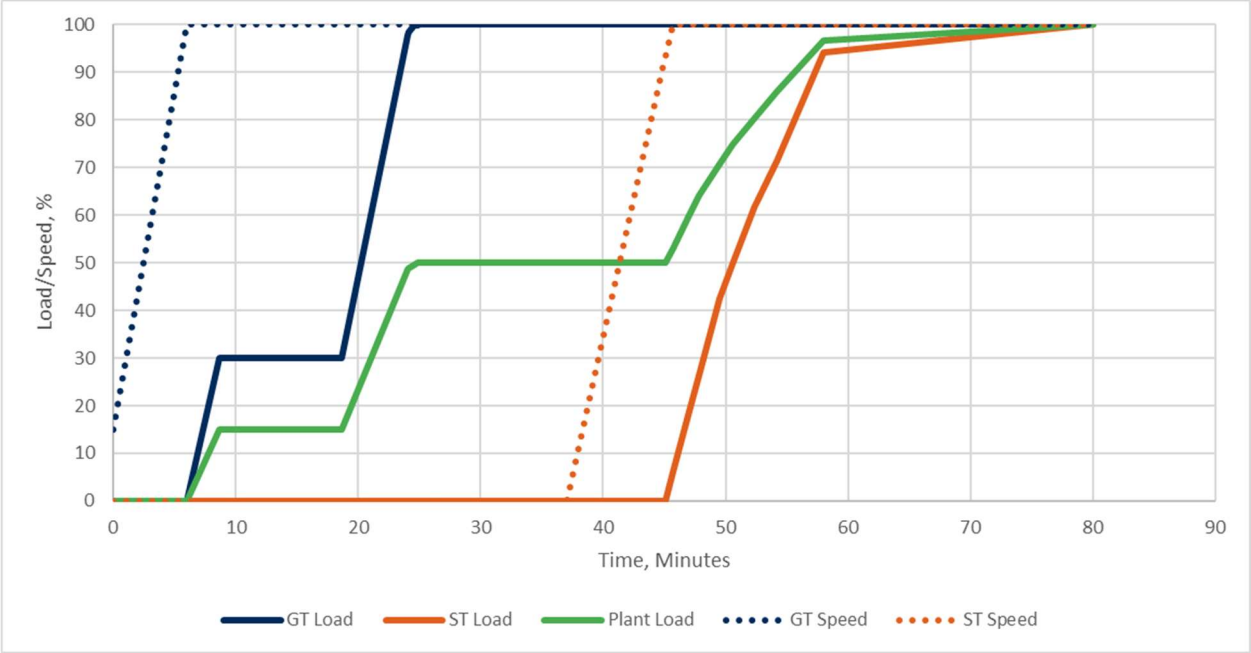

Used with permission from Black & Veatch

Exhibit 2-17 provides an example breakdown of the constituent parts of a startup process for an NGCC power plant. [21]

Exhibit 2-17. Example breakdown of an NGCC power plant startup process

Time Parameter	*Notification Time*	*Start Time*	*Soak Time*	*Run Time*	
Event	*Commitment Instruction*	*Start Sequence Begins*	*First Breaker Closed*	*Dispatchable*	*Following Dispatch*

2.9.2 Ramp Rate

The ramp rate of a unit defines the rate at which it can change load. Ramp rate is a critical metric when considering design and competitiveness of a flexible plant. A unit with a higher ramp rate will have a greater advantage in load-following capabilities and will be able to respond quicker to changes in electric grid power demands (i.e., changes in electric power usage) or support changes in electric grid power generation fluctuations (e.g., daily or hourly changes in the electric power generation capabilities common with wind, solar, and other renewable resources). A unit's ramp rate will be driven by multiple factors consisting of physical limitations, control system response limitations, stable and controllable operation (i.e., minimizing control system hysteresis), safety margins in design, and maintaining operation that benefits equipment health and longevity. Ramp rate is often communicated as the ability to

change load in percent load per minute. A typical ramp rate for a RICE unit could be up to 60 percent per minute while a NGCC electric power plant would fall within the range of 10–15 percent per minute. These percentages ignore any NGCC ramp rate associated with the increased output of the STG as its output will lag until the HRSG is thermally soaked. Once the HRSG and STG are thermally soaked the STG can typically ramp at a rate of 10–15 percent per minute as well. For a conventional start CC plant, the STG start may lag anywhere from approximately 30 to 100 minutes depending on if the start is considered a cold, medium, or hot start. During these cold, medium, or hot starts, the STG ramp rate is anywhere from 1 to 10 percent per minute. For a fast start CC plant, the STG can be decoupled from the CTG where the ramp rate of the CTG is not impacted. The American Society of Mechanical Engineers (ASME) Power Test Code (PTC) 70, Ramp Rates, identifies ASME standard methods for testing the ramp rate of a unit.

2.9.3 Minimum Emissions-Compliant Load

For this study, MECL is defined as the minimum load a unit can operate at before a substantial increase in NOx or CO emissions would make the target stack emissions unachievable. There has been a race to the bottom for all natural gas technologies in order to increase the flexibility of the units, make them more dispatchable, and reduce shutdowns. Multiple literature sources and industry feedback agree that lowering a plant's minimum load is one of the most beneficial operational flexibility measures a plant can implement.

2.9.4 Design Life

The design life, defined as the expected useful operating life of the plant, is used for engineering design, equipment and material procurement, and evaluation of project economics of the plant. As the design life of the project increases the required reliability of equipment and associated capital costs will be higher.

As demonstrated throughout industry, the actual operating life of a plant can exceed the design life of a plant. Actual operating life beyond the design life of a unit can be the result of design margins, enhanced O&M routines, and renewal and replacement of equipment that has reached end of life, etc. Because of the broad range of equipment, along with modes of wear and failure, the discussion of power plant design life can be extensive unless focusing on key critical and capital cost-intensive components of a plant, such as the CT, HRSG, and ST island equipment.

2.9.5 Net Plant Heat Rate

The net plant heat rate (NPHR) of a unit is a metric that is used to quantify the overall thermal efficiency of a power plant. The NPHR for a unit is the quotient of the total heat input into the plant (Btu/hr) and the net electrical power generated by the power plant (kW). In service, measurement of a unit's NPHR can be achieved by either an input/output method or heat-loss method, as outlined by ASME. The input/output method utilizes measurements of total natural gas flow to the unit and measurement of electrical net output. This means of calculating a unit's

NPHR can present issues due to inaccuracies in instrumentation, especially with total natural gas flow, and the ability to accurately measure the actual natural gas heating value during the test.

NPHR, Input/Output Method Calculation:

$$NPHR = \frac{Q_b}{NPO} \qquad \textit{Equation 1}$$

Where:

Q_b – Heat input to plant from fuel, Btu/hr (kJ/hr); corollary of fuel burn rate

NPO – Net plant output, kW

The NPHR of a unit can be translated to the unit's thermal efficiency by use of the following formula:

Thermal Efficiency:

$$\eta = \frac{\mathrm{C\ x\ 100}}{\mathrm{NPHR}} \qquad \textit{Equation 2}$$

Where:

η_P – Plant Thermal Efficiency

C – Constant

C – 3,412 if NPHR is in Btu/kWh

C – 3,598 if NPHR is in kJ/kWh

NPHR – Net plant heat rate

The specific means for arriving at a unit's NPHR are best outlined by the methods of the ASME PTC for power production facilities. The following identifies some of the key PTCs, which may be used in defining or diagnosing a plant's NPHR (additional available PTCs may apply):

- PTC 6.2, Steam Turbines in Combined Cycles
- PTC 17, Reciprocating Internal Combustion Engines
- PTC 6S, Procedures for Routine Performance Test of Steam Turbines
- PTC 46, Overall Plant Performance
- PTC 4.4, Gas Turbine Heat Recovery Steam Generators
- PTC 22, Gas Turbines
- PTC 12.2, Steam Surface Condensers
- PTC 23, Atmospheric Water Cooling Equipment
- PTC 30, Air-Cooled Heat Exchangers
- PTC 30.1, Air-Cooled Steam Condensers

The NPHR of a unit will vary with load. By design, it is lowest at full load and will increase as power plant load decreases. NPHR will also be at its lowest at "new and clean" conditions and will degrade over the life of the plant. Power plant outages and overhauls will recover a portion

of the degraded NPHR, often causing the NPHR of a plant to form a degrading sawtooth curve over its lifetime.

2.9.6 Availability and Reliability

Plant availability and reliability can be described by statistical data accounting for the time the plant is available for generating electrical power and the time the plant is not available for power generation. Typically, the forced outage time the plant is not available for generating power is of greater concern than the time the plant is planned to be offline for routine maintenance and repairs. American National Standards Institute (ANSI) and Institute of Electrical and Electronics Engineers (IEEE) Standard 762, IEEE Standard Definitions for Use in Reporting Electric Generating Unit Reliability, Availability, and Productivity defines operating statistical metrics used to evaluate plant reliability and availability. [22] ANSI and IEEE provide a broad list of metric definitions for characterizing EGU reliability and availability, though industry focuses on a handful with the two primary metrics being plant Equivalent Availability Factor (EAF) and Equivalent Forced Outage Rate (EFOR), which are defined as follows:

- EAF: The maximum electric power generation that an EGU could provide if limited only by outages and de-rates.
- EFOR: The fraction of a given period in which an EGU is not available to provide electric power generation due to forced outages and forced deratings.

EAF and EFOR data for existing plants is available from the North American Electric Reliability Corporation (NERC)-Generating Availability Data System (GADS), which collects and maintains generating availability data from participating EGUs. [23] EAF and EFOR would be expected to be better for a newly-constructed plant compared to those reported in NERC-GADS.

2.9.7 Planned Outages

Planned outages are outages that are scheduled by an EGU operator to inspect and conduct routine maintenance, repairs, rebuild, and refurbishment of power plant equipment to maintain overall plant equipment health, plant performance, and overall plant reliability and availability. Plant operators will schedule outage frequency and duration based on past plant operating experience, to correct known issues, and to conduct OEM-recommended maintenance. The frequency and occurrence can vary between facilities, though some major pieces of equipment (e.g., CTG and STG) can have more common and predictable outage cycles. Operators will often coincide outages to minimize downtime.

During periods of low demand, such as the spring and fall, operators often take short multi-day to one-week outages to prepare a baseload plant for upcoming periods where plant demand may be higher. Often, items are addressed during these outages that may be considered a forced outage if the unit was brought offline to correct them. Such examples may be a tube leak or bearing vibration, which may not be severe enough to force an immediate shutdown but is closely monitored until the next planned outage to correct the malfunction. Enhanced maintenance routines, maintenance programs, and asset management programs can help

improve and optimize planned outages and reduce the annual planned time an EGU is offline for planned outages.

2.9.8 EPC Capital Costs

EPC capital cost includes all costs associated with the project within the plant boundary. EPC costs typically include estimated cost for equipment and materials, construction labor, engineering services, construction management, indirects, and other costs. EPC capital costs are exclusive of owner's costs, which include outside-the-plant boundary development costs, taxes, insurance, interest during construction, and owner's staff and facilities.

2.9.9 Operation and Maintenance

2.9.9.1 Plant Staff Requirements

The plant staff required to support the safe and reliable operation of an EGU can vary between plant owners, plant technology, and employed equipment. Plant staffing requirements are generally not a function of the overall plant capacity, but instead a function of the number of systems that must be monitored and maintained. As an example, a unit with a capacity of 100 MW will require nearly the same staff count as a unit with a capacity of 500 MW that employs the same major equipment configuration, thus demonstrating an optimal economy of scale for plant staffing requirements for larger units.

2.9.9.2 Fixed O&M Costs ($/kW)

Fixed O&M costs are those costs that do not vary with the electrical generation of an EGU. Because these costs tend to remain fixed and independent of the energy generated by the plant, they are typically communicated on unitized $/kW-yr bases (cost per year, per kW of unit capacity). Similar to plant staffing, total fixed costs do not vary substantially among similar power plants of varying capacity. Therefore, the unitized fixed costs in $/kW for smaller EGUs will be much greater than larger units of a similar configuration. However, additional automation and controls system functionality allows for reduction of onsite staff, and increased planned outage frequency will reduce major maintenance costs by significantly reducing costly forced outage repairs.

The following description lists the more common components of natural-fired EGU fixed costs:

- Staffing Labor
    - Operations Staff
    - Maintenance Staff
    - Technical Services Staff
    - Administration Staff
- Maintenance
    - CTG
    - STG and Heat Rejection
    - HRSG
    - Fuel Handling
    - Water and Wastewater Treatment Facilities

    - Wastewater Treatment
    - Air Quality Control Systems
    - Miscellaneous and Balance of Plant (BOP)
    - Contract Labor and Services
- Other Expenses
    - Property Taxes
    - Insurance
    - Bonus and Incentive Pay
    - Office and Administrative Expenses (e.g., Telephone, Computers)
    - Training

2.9.9.3 Non-Fuel Variable O&M Costs ($/MWh)

Non-fuel variable O&M costs are those unit costs that vary with the electric power generation of an EGU and are exclusive of fuel costs. Because these costs tend to vary with the energy generated by the plant, they are typically communicated on a $/MWh basis (cost per unit of electric power generated). Unlike fixed costs, there are less economies of scale with variable costs. While the annual variable cost on a total dollar basis will vary among plants of varying capacity, the cost per unit of electric power generated will be similar, with some cost savings for larger units. Advanced control systems and plant tuning can help to reduce the cost of reagent usage during cyclic operation.

The following description lists the more common components of natural-fired EGU variable costs:

- Outage Maintenance
    - CTG (Annualized)
    - STG (Annualized)
    - HRSG (Annualized)
    - BOP (Annualized) per Unit
- Utilities and Consumables
    - Chemicals
    - Water and Wastewater Treatment
- Air Quality Control System (AQCS)
    - Maintenance (Annualized)
    - Catalyst Replacement (Annualized)
    - AQCS Reagent Costs
    - AQCS Byproduct Disposal Costs

2.9.9.4 Number of Starts

The startup process represents the most rigorous operational periods for the plant's major equipment. Traditionally, baseload units are designed to minimize the number of annual starts, thereby limiting the number of thermal cycles undergone by the pressure parts. In addition to the stress and strain imposed on the plant equipment, each startup constitutes sunk costs (i.e., plant labor and consumables such as fuel and reagent) that must be compensated for in the operating revenue margins later in the operating period. The annual number of starts, regardless of the "start type," will factor into the overall plant economic dispatch characteristics.

3 NATURAL GAS POWER PLANTS

Nine natural gas power plant configurations (11 total cases) were evaluated and are presented in this section. Each design is based on a market-ready technology that is assumed to be commercially available at the time the project commences.

The gross output of the natural gas cases was largely governed by the characteristic output of the commercially available engine/CT. Hence, evaluation of the natural gas designs on a common net output basis was not practicable.

The Rankine cycle portion of the NGCC designs uses a single reheat 16.5 MPa/585°C/585°C (2,400 psia/1,085°F/1,085°F) subcritical steam cycle.

3.1 NATURAL GAS TECHNOLOGY COMPARISON

The current engine and turbine market for natural gas applications offers multiple size options, supplied by several different OEMs. In general, the frame class (e.g., F-class) is delineated by CT output. Advanced-class CTs, such as the H-class or J-class will have higher outputs, and higher efficiencies, than the F-class. Single-unit reciprocating engines cover output ranges up to about 20 MW. The RICE options considered here are on the larger end of the spectrum with each unit of the six-unit configuration producing 18.8 MW. These larger units are better suited for power generation while the smaller units are more typical in applications including backup power, mechanical drive, remote power, black-start capability, etc. Aeroderivative CTs are direct descendants of the airline industry. These units are smaller than frame units, but they are also durable and able to start and stop frequently.

As is stated throughout this report, the objective of the cases presented is to provide a consistent and transparent analysis method that is robust enough to allow for technology comparison on an equivalent basis. It is acknowledged that larger output, higher efficiency machines along with smaller more agile machines are deployed and currently operating in the market today, and future power projects will increasingly pursue these advanced RICE and CT technologies.

3.2 PROCESS AREAS

3.2.1 Natural Gas Supply System

It was assumed that a natural gas main with adequate capacity is near to the site fence line (10 mi) and that a suitable right-of-way is available to install a branch line to the site. For the purposes of this report, it was also assumed that the gas will be delivered to the plant custody transfer point at sufficient pressure such that natural gas is available at the turbine inlet at the fuel system requirements of each case, up to 490 psig (at 80°F). Technologies with fuel system requirements exceeding this pressure (e.g., aeroderivative NGSC) include a fuel booster compressor.

As discussed in Section 1.1, it was assumed that the natural gas has an added mercaptan composition of 5.75×10^{-6} mol%. [9]

A new gas metering station is assumed to be added on the site, adjacent to the new unit(s). The meter may be of the rate-of-flow type, with input to the plant computer for summing and recording or may be of the positive displacement type. In either case, a complete timeline record of gas consumption rates and cumulative consumption is provided.

3.2.2 Combustion Generator

3.2.2.1 Reciprocating Internal Combustion Engine

The RICE options are representative of the state-of-the-art internal combustion engines with base ratings of 18.8 MW for options R6A-S and R6A-E and 9.3 MW for options R12A-S and R12A-E when firing natural gas. These machines are four-stroke, medium-speed, spark-ignited, lean-burn generating sets.

Each RICE is provided with intake air filters, inlet silencers, lube and control oil systems including cooling, compressed air starting systems, exhaust gas silencers, and control systems. No back up fuel was envisioned for these cases.

The RICE is typically supplied in one to three fully shop-fabricated modules, complete with all mechanical, electrical, and control systems required for operation. Site RICE installation involves module interconnection and linking RICE modules to the plant systems. The RICE package scope of supply for SC application, while project specific, does not vary much from project-to-project. A typical scope of supply is presented in Exhibit 3-1.

Exhibit 3-1. RICE typical scope of supply

System	System Scope
ENGINE ASSEMBLY	Coupling to Generator, Platforms, Stairs and Ladders
MECHANICAL PACKAGE	Air Compressor for Starting System (if required)
LUBRICATING OIL SYSTEM	Fresh and Used Lube Oil Reservoirs, Accumulators, 2x100% AC Driven Oil Pumps2x100% Oil Coolers, Duplex Oil Filter, Oil Temperature Control Valves, Oil Heaters, Oil Interconnect Piping (SS and CS), Oil System Instrumentation
ELECTRICAL PACKAGE	HVAC, Lighting, AC and DC Motor Control Centers, Generator Voltage Regulating Cabinet, Generator Protective Relay Cabinet, DC Distribution Panel, Battery Charger, Digital Control System with Local Control Panel (all control and monitoring functions as well as data logger and sequence of events recorder) and control room human machine interface, Fuel Systems Balance of Plant, Communication link for interface with the Utility Supervisory Control and Data Acquisition System, Vibration Monitoring System, Fire Protection System, Cable Tray and Conduit, Provisions for Performance Testing
INLET AND EXHAUST SYSTEMS	Inlet Duct Trash Screens, Inlet Duct and Silencers, AHUs, Exhaust Fans, Louvers, Exhaust Duct Expansion Joint, Inlet Silencer and Exhaust Acoustic Treatment (silencer), Pressure and Temperature Ports and Instrumentation, exhaust insulation for personal protection, exhaust piping, rain cap
NG FUEL SYSTEM	Gas Valves Including Vent, Throttle and Trip Valves, Gas Filter/Separator, Gas Supply Instruments and Instrument Panel

System	System Scope
GENERATOR	Excitation System, Line Termination Enclosure with CTs, VTs, Surge Arrestors, and Surge Capacitors, Neutral Cubicle with CT, Neutral Tie Bus, Grounding Transformer and Secondary Resistor, Generator Auxiliaries Control Enclosure, Grounding System Connectors
MISCELLANEOUS	Interconnecting Pipe, Wire, Tubing and Cable Instrument Air System Including Air Dryer, Drain System Drain Tanks, Coupling, Coupling Cover, and Associated Hardware

3.2.2.2 *Combustion Turbine*

The natural gas options consist of both aeroderivative and frame type CTGs. These CTGs are representative of the 2020 state-of-the-art turbines with an ISO base rating ranging from 52 MW for option SC2A to 381 MW for options CC1A-H and CC2A-H when firing natural gas. [17] Each of these machines is an axial flow, constant speed unit, with variable inlet guide vane (IGVs). The aeroderivative units are multi spool, while the frame units are single spool.

Each CTG is provided with inlet air filtration systems, inlet silencers, lube and control oil systems including cooling, electric motor starting systems, acoustical enclosures including heating and ventilation, control systems including supervisory, fire protection, and fuel systems. No back up fuel was envisioned for these cases.[e]

The CTG is typically supplied in several fully shop-fabricated modules, complete with all mechanical, electrical, and control systems required for CTG operation. Site CTG installation involves module interconnection and linking CTG modules to the plant systems. The CTG package scope of supply, while project specific, does not vary much from project-to-project. A typical scope of supply is presented in Exhibit 3-2.

Exhibit 3-2. Combustion turbine typical scope of supply

System	System Scope
ENGINE ASSEMBLY	Coupling to Generator, Water Mist Fire Protection System, Insulation Blankets, Platforms, Stairs and Ladders
ENGINE ASSEMBLY WITH BEDPLATE	Variable Inlet Guide Vane System, Compressor, Bleed System, Purge Air System, Bearing Seal Air System, Combustors, Turbine Rotor Cooler
WALK-IN ACCOUSTICAL ENCLOSURE	HVAC, Lighting, and Water Mist Fire Protection System
MECHANICAL PACKAGE	HVAC, Lighting, Air Compressor for Pneumatic System, Fire Protection Systems
LUBRICATING OIL SYSTEM AND CONTROL OIL SYSTEM	Lube Oil Reservoir, Accumulators, 2x100% AC Driven Oil Pumps, DC Emergency Oil Pump with Starter, 2x100% Oil Coolers, Duplex Oil Filter, Oil Temperature and Pressure Control Valves, Oil Vapor Exhaust Fans and Demister, Oil Heaters, Oil Interconnect Piping (SS and CS), Oil System Instrumentation
ELECTRICAL PACKAGE	HVAC, Lighting, AC and DC Motor Control Centers, Generator Voltage Regulating Cabinet, Generator Protective Relay Cabinet, DC Distribution Panel, Battery Charger, Digital

[e] While this study does not consider the use of backup fuel, certain applications, such as peaking units, may necessitate the inclusion of backup fuel.

System	System Scope
	Control System with Local Control Panel (all control and monitoring functions as well as data logger and sequence of events recorder), Control System Valves and Instrumentation Communication link for interface with plant DCS Supervisory System, Bentley Nevada Vibration Monitoring System, FM-200 Fire Protection System, Cable Tray and Conduit, Provisions for Performance Testing including Test Ports, Thermowells, Instrumentation and DCS interface cards
INLET AND EXHAUST SYSTEMS	Inlet Duct Trash Screens, Inlet Duct and Silencers, Self-Cleaning Filters, Hoist System for Filter Maintenance, Evaporative Cooler System, Exhaust Duct Expansion Joint, Inlet Silencer and Exhaust Acoustic Treatment, Pressure and Temperature Ports and Instrumentation
NG FUEL SYSTEM	Gas Valves Including Vent, Throttle and Trip Valves, Gas Filter/Separator, Gas Supply Instruments and Instrument Panel
STARTING SYSTEM	Enclosure, Static Start System, Turning Gear, and Clutch Assembly
GENERATOR	Static Exciter and Excitation Transformer, Line Termination Enclosure with CTs, VTs, Surge Arrestors, and Surge Capacitors, Neutral Cubicle with CT, Neutral Tie Bus, Grounding Transformer and Secondary Resistor, Generator Gas Dryer, Seal Oil System (including Defoaming Tank, Reservoir, Seal Oil Pump, Emergency Seal Oil Pump, Vapor Extractor, and Oil Mist Eliminator), Generator Auxiliaries Control Enclosure, Grounding System Connectors
GENERATOR COOLING	Hydrogen Cooling System (including H_2 to Glycol and Glycol to Air Heat Exchangers, Liquid Level Detector Circulation System, Interconnecting Piping and Controls)
MISCELLANEOUS	Interconnecting Pipe, Wire, Tubing and Cable Instrument Air System Including Air Dryer, On-Line and Off-Line Water Wash System, Low Pressure (LP) CO_2 Storage Tank, Drain System, Drain Tanks, Coupling, Coupling Cover, and Associated Hardware

Electrical generators are provided with the CT package. The generators are assumed to be 18 kV, 3-phase, 60 Hz, constructed to meet ANSI and National Electrical Manufacturers Association (NEMA) standards for turbine-driven synchronous generators. The generator is hydrogen (H_2) cooled, complete with excitation system, cooling, and protective relaying.

3.2.3 Heat Recovery Steam Generator

For CC options, the HRSG is configured with HP, intermediate pressure (IP), and low pressure (LP) steam drums, and superheater, reheater, evaporator, and economizer sections. The HP drum is supplied with feedwater (FW) by the HP boiler feed pump to generate HP steam, which passes to the superheater section for heating to 585°C (1,085°F). The IP drum is supplied with FW by an interstage bleed from the HP boiler feed pump. The IP steam is mixed with the HP turbine exhaust before being reheated to 585°C (1,085°F). The combined flows are admitted into the IP section of the ST. The LP drum provides steam to the LP turbine and FW to the HP boiler feed pump.

The HRSG tubes typically comprise finned tubing. The high-temperature portions are type P91, P92, or P22 ferritic alloy material; the low-temperature portions (less than 399°C [750°F]) are carbon steel (CS). Each HRSG exhausts directly to its stack, which is fabricated from CS plate materials and epoxy coated. The stack for the NGCC cases is assumed to be 46 m (150 ft) high,

and the cost is included in the HRSG account. RICE and NGSC options do not have HRSGs, but their stack heights are assumed to be 15 m (50 ft) high and 27 m (90 ft) high, respectively.

3.2.4 NOx Control System

Two measures are taken to reduce the NOx. The first is a DLN burner (or water injection for option SC1A) in the CTG options. The combustion control reduces the emissions to about 25 ppmvd [17] (assumed to be 100 percent NO and referenced to 15 percent O_2). RICE options have less control over the combustion and thus have higher NOx emissions.

While all of the configurations produce NOx emissions below the NSPS limits described in Section 2.3.1 at full load, an SCR was included for all options as a second measure to ensure the plant was in compliance at all load points and to meet EPA's PSD program by installing the BACT.

An SCR reactor uses ammonia (NH_3) and a catalyst to reduce NOx to nitrogen (N_2) and water (H_2O). The SCR system consists of a reactor, and NH_3 supply and storage system. The SCR system is capable of over 90 percent reduction while firing natural gas. [16]

Operation Description – The SCR reactor is located in the exhaust system for the RICE and aeroderivative options (downstream of the air attemperator for aeroderivative options); for the NGCC options, it is in the flue gas path inside the HRSG between the HP and IP sections. The SCR reactor is equipped with one catalyst layer consisting of catalyst modules stacked in line on a supporting structural frame. The SCR reactor has space for installation of an additional layer. NH_3 is injected into the gas immediately prior to it entering the SCR reactor. The NH_3 injection grid is arranged into several sections and consists of multiple pipes with nozzles. The NH_3 flow rate into each injection grid section is controlled considering imbalances in the flue gas flow distribution across the exhaust ducting or HRSG. The catalyst contained in the reactor greatly accelerates the reaction between the NH_3 and the NOx in the gas. The catalyst consists of various active materials such as titanium dioxide, vanadium pentoxide, and tungsten trioxide. The optimum inlet flue gas temperature range for the catalyst is 260°C (500°F) to 371°C (700°F), with a maximum inlet flue gas temperature of 454°C (850°F)

The NH_3 storage and injection system consists of unloading facilities, bulk storage tank, vaporizers, and dilution air skid.

3.2.5 CO/VOC Control System

Both CO and VOC are controlled by a CO catalyst. The CO and VOC emissions vary much more than NOx emissions for all options considered. While all of the configurations produce CO and VOC emissions below the NSPS limits described in Section 2.3.1 at full load, a CO catalyst was included as a second measure to ensure the plant was in compliance at all load points and to meet EPA's PSD program by installing the BACT.

A CO catalyst uses a honeycomb structure that oxidizes CO and VOC to CO_2. The CO catalyst is capable of over 90 percent CO reduction while firing natural gas. Sizing the catalyst in this way often results in an overreduction of VOCs beyond the BACT target.

Operation Description – The CO catalyst is located in the exhaust system for the RICE and aeroderivative options; for the NGCC options it is in the flue gas path inside the HRSG between the HP and IP sections. For cases that include air attemperation (SC1A and SC2A) of the exhaust gas, the CO catalyst is located downstream of the attemperation, along with the SCR.

3.2.6 Steam Turbine

For the CC options, the ST consists of an HP section, an IP section, and a double-flow LP section, all connected to the generator by a common shaft. The HP and IP sections are contained in a single span, opposed-flow casing, with the double-flow LP section in a separate casing.

Main steam from the boiler passes through the stop valves and control valves and enters the turbine at the conditions provided in Exhibit 3-3.

Exhibit 3-3. NGCC steam conditions

Steam Conditions	
Steam Parameter	**NGCC**
Main Pressure, MPa (psia)	16.5 (2,400)
Main Temperature, °C (°F)	585 (1,085)
Reheat Pressure, MPa (psia)	3.6 (515)
Reheat Temperature, °C (°F)	585 (1,085)

The steam initially enters the turbine near the middle of the HP span, flows through the turbine, and is combined with steam from the IP superheater before being returned to the HRSG for reheating. The reheat steam flows through the reheat stop valves and intercept valves and enters the IP section at the conditions provided in Exhibit 3-3. After passing through the IP section, the steam enters a crossover pipe, which transports the steam to the LP section. A branch line equipped with combined stop/intercept valves conveys LP steam from the HRSG LP drum to a tie-in at the crossover line. The steam divides into two paths and flows through the LP sections exhausting downward into the condenser.

Turbine bearings are lubricated by a closed-loop, water-cooled pressurized oil system. Turbine shafts are sealed against air in-leakage or steam blowout using a modern positive pressure variable clearance shaft sealing design arrangement connected to a LP steam seal system. The open-air-cooled generator produces power at 18 kV. A static, transformer type exciter is provided. The STG is controlled by a triple-redundant microprocessor-based electro-hydraulic control system. The system provides digital control of the unit in accordance with programmed control algorithms, color monitor/operator interfacing, and datalink interfaces to the balance-of-plant distributed control system (DCS) and incorporates on-line repair capability.

3.2.7 Water and Steam Systems

3.2.7.1 Air Cooled Condenser

To reduce the reliance on geographic water availability, the combined cycle options were designed with air cooled condensers, which consume no water to reject heat. At a specific ambient condition, a typical ACC design will result in a higher STG backpressure and a higher auxiliary load than a standard condenser paired with a wet cooling tower. An ACC is thermodynamically limited by the sensible heat rejection to the ambient dry bulb temperature while a wet cooling tower benefits from a lower temperature limitation by cooling the wet bulb temperature (larger cooling range) achieved by also utilizing the latent heat transfer available.

The aggressiveness of an ACC design can be determined by the internal temperature difference (ITD), which is defined as the difference between the saturated steam temperature and the dry bulb temperature. Designing an ACC for the same backpressure as a condenser and wet cooling tower during hot day conditions would result in an unreasonable ITD and it would have substantially more fans, be more expensive, and have a higher auxiliary power than a typical ACC design.

3.2.7.2 Condensate

For the CC options, the function of the condensate system is to pump condensate from the ACC's deaerating hotwell through the gland steam condenser and the low-temperature economizer section in the HRSG.

The system consists of one ACC; two 100 percent capacity, motor-driven vertical multistage condensate pumps (total of two pumps for the plant), one steam seal regulator, condenser air removal vacuum pumps, condensate polisher, and a low-temperature tube bundle in the HRSG.

Condensate is delivered to a common discharge header through two separate pump discharge lines, each with a check valve and a gate valve. A common minimum flow recirculation line discharging to the condenser is provided to maintain minimum flow requirements for the steam seal regulator and the condensate pumps.

3.2.7.3 Feedwater

For the CC options, the function of the FW system is to pump the various FW streams from the LP evaporator to the respective steam drums. Two 100 percent capacity motor-driven feed pumps are provided per each HRSG. The FW pumps are equipped with an interstage takeoff to provide IP FW. Each pump is provided with inlet and outlet isolation valves, outlet check valves, and individual minimum flow recirculation lines discharging back to the LP drum. The recirculation flow is controlled by automatic or pneumatic flow control valves. In addition, the suctions of the boiler feed pumps are equipped with strainers.

3.2.7.4 Steam System

For the CC options, main, intermediate, and LP steam exits the HRSG superheater section through motor-operated stop/check valves and motor-operated gate valves. The main steam is

routed to the HP turbine stop valve. The intermediate steam is combined with the HP turbine exhaust and is conveyed through a motor-operated isolation gate valve to the HRSG reheater and from the HRSG reheater outlet through a motor-operated gate valve to the IP turbines. The LP steam is combined with the IP turbine exhaust and is conveyed through a motor-operated isolation gate valve to the LP turbines.

3.2.7.5 Circulating Water System

The auxiliary cooling system is closed loop. The system's purpose is to reject heat from all the auxiliary cooling loads for the plant. The miscellaneous cooling loads are served by independent, industrial scale electric-powered heat exchangers with fully enclosed air-to-glycol heat rejection circuits. The system provides cooling water to the following systems depending on plant configuration:

1. CTG lube oil coolers
2. CTG air coolers
3. STG lube oil coolers
4. STG H_2 coolers
5. BFW pumps
6. Air compressors
7. Generator seal oil coolers (as applicable)
8. Sample room chillers
9. Blowdown coolers
10. Condensate extraction pump-motor coolers
11. Jacket cooling
12. Compressor intercooler

3.2.7.6 Buildings and Structures

Structures assumed for the appropriate natural gas cases can be summarized as follows:

1. Combustion Turbine Ladders, Stairs, and Walkways
2. Generation Building (housing the STG_
3. Administration/Office/Control Room Building
4. Water Treatment and Wastewater Treatment Buildings
5. Machine Shop
6. Warehouse

3.2.8 Accessory Electric Plant

The accessory electric plant consists of all switchgear and control equipment, emergency generator equipment (single fuel: natural gas), station service equipment, conduit and cable trays, wire, and cable. It also includes the main transformer, required foundations, and standby equipment.

3.2.9 Instrumentation and Control

An integrated plant-wide DCS is provided. The DCS is a redundant microprocessor-based, functionally distributed system. The control room houses an array of video monitors and keyboard units. The monitor/keyboard units are the primary interface between the generating

process and operations personnel. The DCS incorporates plant monitoring and control functions for all the major plant equipment. The DCS is designed to provide 99.5 percent availability.

The plant equipment and the DCS are designed for automatic response to load changes from minimum load to 100 percent. Startup and shutdown routines are implemented as supervised manual procedures, with operator selection of modular automation routines available.

3.2.10 Waste Treatment/Miscellaneous Systems

An onsite water treatment facility treats all runoff, cleaning wastes, blowdown, and backwash. It is anticipated that the treated water will be suitable for discharge into existing systems and be within EPA standards for suspended solids, oil and grease, pH, and miscellaneous metals.

The waste treatment system is minimal and consists, primarily, of neutralization and oil/water separators (along with the associated pumps, piping, etc.).

Miscellaneous systems consisting of service air, instrument air, and service water are provided. All truck roadways and unloading stations inside the fence area are provided.

The majority of the plant building lighting would be expected to be light-emitting diode elements due their energy efficiency. The types of flow-measuring instruments utilized throughout the plant would vary depending on the system measured (i.e., air, water, steam, etc.) but would be typically either a venturi, orifice, or hot wire anemometer. All large motors and electrical enclosures would be expected to be fully air-cooled due to the plant size. The auxiliary, package-style boiler (or any onsite sparging steam supply source) would be sized appropriately to provide saturated steam during startup and shutdown periods. The actuation method (i.e., pneumatic actuation or electric actuation) for various sub-system control valves or dampers would depend on the duty of the control valve or damper; electric actuation provides precision, and pneumatic actuation provides speed and force.

3.3 RECIPROCATING INTERNAL COMBUSTION ENGINE CASES

This section contains an evaluation of plant designs for cases R6A-S, R6A-E, R12A-S, and R12A-E.

The difference between spinning and efficiency operation is purely operational and does not impact the design of the plant. Units can easily switch between modes to allow for different types of flexibility. The balance of this section is organized as follows:

- Key System Assumptions is a summary of study and modeling assumptions relevant to cases the RICE cases
- Sparing Philosophy is provided for the RICE cases.
- Process and System Description provides an overview of the technology operation as applied to the RICE cases. The systems that are common to all NG cases were covered in Section 3.2 and only features that are unique to the RICE cases are discussed further in this section.
- Performance Results provides the main modeling results from the RICE cases, including the full load performance summary, part load performance summary, environmental

performance, carbon balance, water balance, energy and mass balance diagrams, and energy balance table.

- Equipment List provides an itemized list of major equipment for the RICE cases with account codes that correspond to the cost accounts in the Cost Estimates section.
- Cost Estimates provides a summary of capital and operating costs the RICE cases.

3.3.1 Key System Assumptions, RICE

System assumptions for the RICE cases are compiled in Exhibit 3-4.

Exhibit 3-4. Plant study configuration matrix, RICE

	R6A-S	R6A-E	R12A-S	R12A-E
Steam Cycle, MPa/°C/°C (psig/°F/°F)	N/A			
Fuel	Natural Gas			
Fuel Pressure at Plant, MPa (psia)	2.8 (400)			
Condenser Pressure, mm Hg (in. Hg)	N/A			
Stack Temperature, °C (°F)	375°C (707°F)		367°C (692°F)	
SO_2 Control	Low Sulfur Fuel			
NOx Control	SCR			
SCR Efficiency, %[A]	95.5			
Ammonia Slip (End of Catalyst Life), ppmv	10			
CO Catalyst Efficiency (CO), %[A]	87.8		90.4	
CO Catalyst Efficiency (VOC), %[A]	29.5		50.6	

[A]Removal efficiencies are based on the flue gas content

3.3.1.1 Balance of Plant, RICE

The BOP assumptions for all RICE cases are presented in Exhibit 3-5.

Exhibit 3-5. BOP assumptions, RICE

Parameter	Value
Cooling System	Air-to-Glycol
Fuel and Other Storage	
Natural Gas	Pipeline supply at 32.8 MPa (400 psia) and 27°C (80°F)
Plant Distribution Voltage	
Motors below 1 hp	110/220 V
Motors between 1 hp and 250 hp	480 V
Motors between 250 hp and 5,000 hp	4,160 V
Motors above 5,000 hp	13,800 V

Parameter	Value
RICE Generators	18,000 V
Grid Interconnection Voltage	345 kV
Water and Wastewater	
Makeup Water	The water supply is 50 percent from a local POTW and 50 percent from groundwater and is assumed to be in sufficient quantities to meet plant makeup requirements. Makeup for potable, process, and DI water is drawn from municipal sources.
Process Wastewater	Storm water that contacts equipment surfaces is collected and treated for discharge through a permitted discharge.
Sanitary Waste Disposal	Design includes a packaged domestic sewage treatment plant with effluent discharged to the industrial wastewater treatment system. Sludge is hauled off site. Packaged plant is sized for 5.68 m^3/d (1,500 gpd).
Water Discharge	N/A

3.3.2 Sparing Philosophy, RICE

Multiple units are used to accommodate the size of commercial RICEs. There is no redundancy other than normal sparing of the generation equipment. The plant design consists of the following major subsystems:

- R6A-S and R6A-E
    - Six state-of-the-art 2020 18 MW RICEs (6 x 16.7 percent)
- R12A-S and R12A-E
    - Twelve state-of-the-art 2020 9 MW RICEs (12 x 8.3 percent)

3.3.3 Case R6A-S – Process Description

In this section, the RICE is described. The system description follows the block flow diagram (BFD) in Exhibit 3-6 and stream numbers reference the same exhibit. Exhibit 3-7 provides process data for the numbered streams in the BFD. The BFD shows only one of the trains, but the flow rates in the stream table are the total system. As previously mentioned, the difference between R6A-S and R6A-E is purely operational. As such, only the results of Case R6A-S are provided in detail. A comparison of R6A-S and R6A-E is provided in Section 3.3.15. Full stream tables are only provided for the 100 percent load point.

Exhibit 3-6. Case R6A-S BFD, RICE

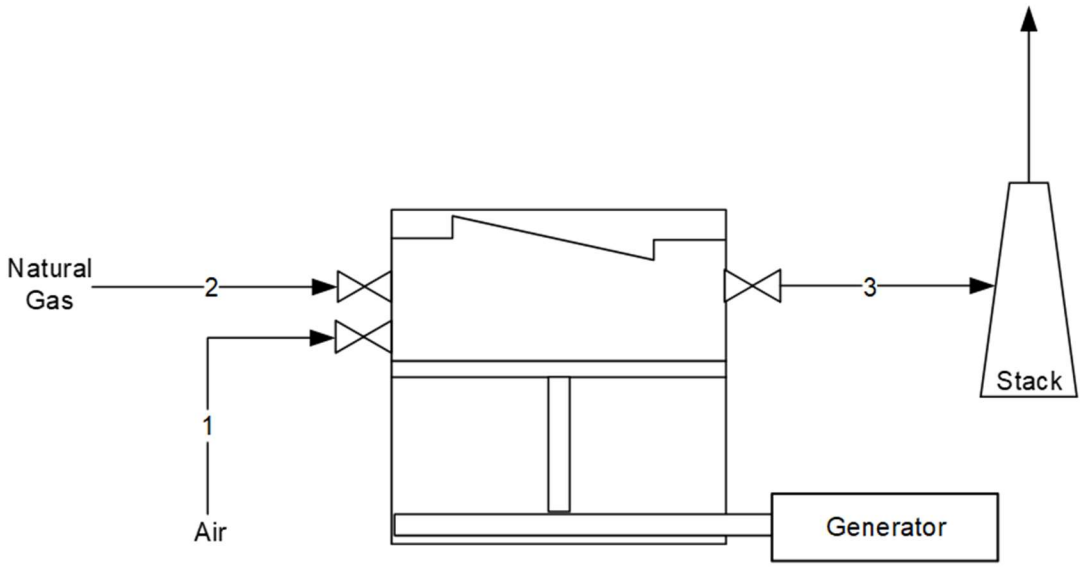

Ambient air (stream 1) is supplied to an inlet filter and is mixed with natural gas (stream 2) in a spark ignition engine. The flue gas exits the engine (stream 3) and passes to the stack.

Exhibit 3-7. Case R6A-S stream table, RICE

	1	2	3
V-L Mole Fraction			
Ar	0.0092	0.0000	0.0088
CH_4	0.0000	0.9310	0.0005
CH_4S	0.0000	0.0000	0.0000
C_2H_6	0.0000	0.0320	0.0000
C_3H_8	0.0000	0.0070	0.0000
C_4H_{10}	0.0000	0.0040	0.0000
CO_2	0.0003	0.0100	0.0498
H_2O	0.0099	0.0000	0.1047
N_2	0.7732	0.0160	0.7357
O_2	0.2074	0.0000	0.1005
SO_2	0.0000	0.0000	0.0000
Total	1.0000	1.0000	1.0000
V-L Flowrate, kg_{mol}/hr	21,238	1,072	22,342
V-L Flowrate, kg/hr	612,867	18,581	631,447
Solids Flowrate, kg/hr	0	0	0
Temperature, °C	15	27	375
Pressure, MPa, abs	0.10	2.76	0.10
Steam Table Enthalpy, kJ/kg[A]	30.23	24.39	575.68
AspenPlus Enthalpy, kJ/kg[B]	-97.58	-4,484.84	-1,208.53
Density, kg/m^3	1.2	20.5	0.5
V-L Molecular Weight	28.857	17.328	28.263
V-L Flowrate, lb_{mol}/hr	46,822	2,364	49,255
V-L Flowrate, lb/hr	1,351,140	40,963	1,392,103
Solids Flowrate, lb/hr	0	0	0
Temperature, °F	59	80	707
Pressure, psia	14.7	400.3	14.8
Steam Table Enthalpy, Btu/lb[A]	13.0	10.5	247.5
AspenPlus Enthalpy, Btu/lb[B]	-42.0	-1,928.1	-519.6
Density, lb/ft^3	0.076	1.279	0.033

[A]Steam table reference conditions are 32.02°F & 0.089 psia

[B]Aspen thermodynamic reference state is the component's constituent elements in an ideal gas state at 25°C and 1 atm

3.3.4 Case R6A-S – Full Load Performance Results

At full load, the plant produces a net output of 111 MW at a net plant efficiency of 41.3 percent (HHV basis). Full load performance for Case R6A-S is summarized in Exhibit 3-8. Exhibit 3-9 presents a detailed breakdown of the auxiliary power requirements at full load.

Exhibit 3-8. Case R6A-S plant performance summary

Performance Summary	
Reciprocating Engine Power, MWe	113
Steam Turbine Power, MWe	-
Total Gross Power, MWe	**113**
Nameplate Capacity, MWe	**113**
Balance of Plant, kWe	1,633
Total Auxiliaries, MWe	**2**
Net Power, MWe	**111**
HHV Net Plant Efficiency, %	41.3%
HHV Net Plant Heat Rate, kJ/kWh (Btu/kWh)	8,717 (8,262)
HHV Reciprocating Engine Efficiency, %	41.9%
LHV Net Plant Efficiency, %	45.8%
LHV Net Plant Heat Rate, kJ/kWh (Btu/kWh)	7,868 (7,457)
LHV Reciprocating Engine Efficiency, %	46.42%
Steam Turbine Cycle Efficiency, %	–
Steam Turbine Heat Rate, kJ/kWh (Btu/kWh)	–
Condenser Duty, GJ/hr (MMBtu/hr)	–
Natural Gas Feed Flow, kg/hr (lb/hr)	18,581 (40,963)
HHV Thermal Input, kWt	269,908
LHV Thermal Input, kWt	243,619
Raw Water Withdrawal, (m^3/min)/MWnet (gpm/MWnet)	–
Raw Water Consumption, (m^3/min)/MWnet (gpm/MWnet)	–

Exhibit 3-9. Case R6A-S plant power summary

Power Summary	
Reciprocating Engine Power, MWe	113
Steam Turbine Power, MWe	–
Total Gross Power, MWe	**113**
Nameplate Total Capacity, MWe	**113**
Auxiliary Load Summary	
Air Cooled Condenser Fans	–
Ancillary Glycol Cooling Loops, kWe	687
Attemperating Air Fan, kWe	–
Reciprocating Engine Auxiliaries, kWe	226
Combustion Turbine Water Injection Pump, kWe	–
Condensate Pumps, kWe	–
Feedwater Pumps, kWe	–
Ground Water Pumps, kWe	–
Miscellaneous Balance of Plant,[A] kWe	375
Natural Gas Compression, kWe	–
SCR, kWe	5
Steam Turbine Auxiliaries, kWe	–
Transformer Losses, kWe	340
Total Auxiliaries, MWe	**2**
Net Power, MWe	**111**

[A]Includes plant control systems, lighting, HVAC, and miscellaneous low voltage loads

3.3.4.1 Environmental Performance

The environmental targets for emissions of NOx, SO_2, and PM were presented in Section 2.3. A summary of the plant air emissions for Case R6A-S is presented in Exhibit 3-10.

Exhibit 3-10. Case R6A-S air emissions

	kg/GJ (lb/MMBtu)	tonne/year (ton/year)[A]	kg/MWh (lb/MWh)[B]
SO_2	0.000 (0.001)	3 (4)	0.003 (0.008)
NOx	0.005 (0.012)	43 (47)	0.043 (0.095)
Particulate	0.009 (0.021)	77 (84)	0.077 (0.170)
Hg	0.000 (0.000)	0 (0)	0.000 (0.000)
VOC	0.014 (0.033)	119 (131)	0.120 (0.265)
CO	0.015 (0.035)	128 (141)	0.129 (0.285)
CO_2	50 (117)	429,236 (473,152)	433 (955)
CO_2[C]	-	-	440 (969)

[A]Calculations based on a 100 percent capacity factor
[B]Emissions based on gross power except where otherwise noted
[C]CO_2 emissions based on net power instead of gross power

For the purpose of this report, the natural gas was assumed to contain the domestic average value of total sulfur of 0.34 gr/100 scf ($4.71x10^{-4}$ lb-S/MMBtu). [9] It was also assumed that the added CH_4S was the sole contributor of sulfur to the natural gas. No sulfur capture systems were required.

Uncontrolled NOx emissions from the engine are about 110 ppmvd at 15 percent O_2. An SCR unit then further reduces the NOx concentration to 5 ppmvd at 15 percent O_2. [16]

The pipeline natural gas was assumed to contain no Hg or HCl, resulting in zero emissions.

RICE produces relatively high uncontrolled CO (131 ppmvd at 15 percent O_2) and VOC (67 ppmvd at 15 percent O_2) emissions. A CO catalyst is used to control the CO emissions to 16 ppmvd at 15 percent O_2 and the VOC emissions to 26 ppmvd at 15 percent O_2.

The production of PM is a result of system inefficiencies and is not produced or emitted in any significant amount.

CO_2 emissions represent the uncontrolled discharge from the process.

The carbon balance for the plant is shown in Exhibit 3-11. The carbon input to the plant consists of carbon in the natural gas and carbon in the air. Carbon leaves the plant as CO_2 through the stack.

Exhibit 3-11. Case R6A-S carbon balance

Carbon In		Carbon Out	
	kg/hr (lb/hr)		kg/hr (lb/hr)
Natural Gas	13,420 (29,587)	Stack Gas	13,504 (29,771)
Air (CO_2)	83 (184)		
Total	**13,504 (29,771)**	**Total**	**13,504 (29,771)**

As shown in Exhibit 3-12, the sulfur content of the natural gas is insignificant. All sulfur in the natural gas is emitted in the stack gas.

Exhibit 3-12. Case R6A-S sulfur balance

Sulfur In		Sulfur Out	
	kg/hr (lb/hr)		kg/hr (lb/hr)
Natural Gas	0.2 (0.4)	Stack Gas	0.2 (0.4)
Total	**0.2 (0.4)**	**Total**	**0.2 (0.4)**

No water is used in the RICE cases.

3.3.4.2 Energy and Mass Balance Diagrams

An energy and mass balance diagram is shown for Case R6A-S in Exhibit 3-13.

An overall plant energy balance is provided in tabular form in Exhibit 3-14. The power out is the RICE power prior to generator losses. The power at the generator terminals (shown in Exhibit 3-8) is calculated by multiplying the power out by the full load generator efficiency (97.9 percent).

This page intentionally left blank

Exhibit 3-13. Case R6A-S energy and mass balance, RICE

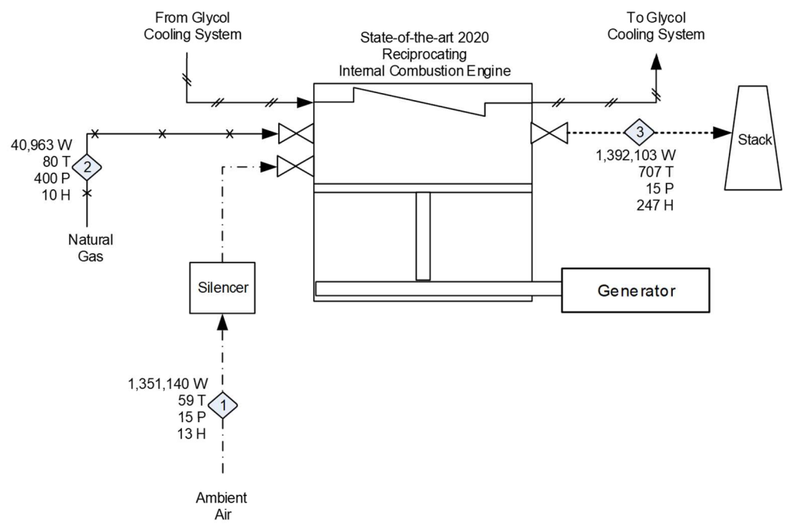

LEGEND

- Air
- Natural Gas
- Water
- Flue Gas
- Glycol

W	Flowrate, lbm/hr
T	Temperature, °F
P	Absolute Pressure, PSIA
H	Enthalpy, Btu/lbm
MWe	Power, Megawatts Electrical

Notes:
1. Enthalpy reference point is natural state at 32 °F and 0.08865 psia

PLANT PERFORMANCE SUMMARY

Gross Plant Power:	113 MWe
Auxiliary Load:	2 MWe
Net Plant Power:	111 MWe
Net Plant Efficiency, HHV:	41.3%
Net Plant Heat Rate, HHV:	8,262 Btu/kWh

NATIONAL ENERGY TECHNOLOGY LABORATORY

DOE/NETL

NGSC
CASE R6A-S

ENERGY AND MASS BALANCE DIAGRAM

NATURAL GAS SIMPLE CYCLE PLANT
CASE R6A-S
6 X STATE-OF-THE-ART 2020 RECIPROCATING
INTERNAL COMBUSTION ENGINE

DWG. NO.	PAGES
FPB-EMB-CS-R6A-S-PG-1	1 OF 1

This page intentionally left blank

Exhibit 3-14. Case R6A-S overall energy balance (0°C [32°F] reference)

	HHV	Sensible + Latent	Power	Total
Heat In GJ/hr (MMBtu/hr)				
Natural Gas	972 (921)	0.7 (0.6)	–	972 (922)
Air	–	19 (18)	–	19 (18)
Raw Water Makeup	–	0.0 (0.0)	–	0.0 (0.0)
Auxiliary Power	–	–	5.9 (5.6)	5.9 (5.6)
TOTAL	**972 (921)**	**19 (18)**	**5.9 (5.6)**	**997 (945)**
Heat Out GJ/hr (MMBtu/hr)				
Stack Gas	–	364 (345)	–	364 (345)
Sulfur	–	–	–	–
Motor Losses and Design Allowances	–	–	14 (13)	14 (13)
Cooling Load[A]	–	203 (192)	–	203 (192)
CO_2 Product Stream	–	–	–	–
Deaerator Vent	–	–	–	–
Ambient Losses[B]	–	5.9 (5.6)	–	5.9 (5.6)
Power	–	–	407 (386)	407 (386)
TOTAL	**–**	**572 (542)**	**421 (399)**	**993 (942)**
Unaccounted Energy[C]	–	3.3 (3.1)	–	3.3 (3.1)

[A]Includes miscellaneous cooling loads
[B]Ambient losses include all losses to the environment through radiation, convection, etc.
[C]By difference

3.3.5 Case R6A-S – Part Load Performance Results

Plant performance results are summarized at each discrete load point in Exhibit 3-15. Exhibit 3-16 displays a detailed breakdown of the auxiliary power requirement at each discrete load point. Air emissions at each discrete load point are summarized in Exhibit 3-17. The results presented in this section are reflective of steady-state operation. Performance associated with specific operating profiles (e.g., load-following, peaking) will differ.

Exhibit 3-15. Case R6A-S part load plant performance summary

Performance Summary					
Percent Load	**100%**	**75%**	**50%**	**25%**	**10%**
Reciprocating Engine Power, MWe	113	85	57	28	11
Steam Turbine Power, MWe	–	–	–	–	–
Total Gross Power, MWe	**113**	**85**	**57**	**28**	**11**
Nameplate Capacity, MWe	**113**	**113**	**113**	**113**	**113**
Total Auxiliaries, MWe	**2**	**1**	**1**	**1**	**0**
Total Auxiliaries, % of Gross Power	**1.4%**	**1.5%**	**1.6%**	**1.9%**	**3.1%**
Net Power, MWe	**111**	**83**	**56**	**28**	**11**
HHV Net Plant Efficiency, %	41.3%	39.8%	37.7%	32.7%	21.5%
HHV Net Plant Heat Rate, kJ/kWh (Btu/kWh)	8,717 (8,262)	9,044 (8,572)	9,551 (9,053)	11,006 (10,432)	16,749 (15,875)
HHV Reciprocating Engine Efficiency, %	41.9%	40.4%	38.3%	33.3%	22.2%
LHV Net Plant Efficiency, %	45.8%	44.1%	41.8%	36.2%	23.8%
LHV Net Plant Heat Rate, kJ/kWh (Btu/kWh)	7,868 (7,457)	8,163 (7,737)	8,621 (8,171)	9,934 (9,416)	15,118 (14,329)
LHV Reciprocating Engine Efficiency, %	46.4%	44.8%	42.4%	36.9%	24.6%
Steam Turbine Cycle Efficiency, %	–	–	–	–	–
Steam Turbine Heat Rate, kJ/kWh (Btu/kWh)	–	–	–	–	–
Condenser Duty, GJ/hr (MMBtu/hr)	–	–	–	–	–
Natural Gas Feed Flow, kg/hr (lb/hr)	18,581 (40,963)	14,430 (31,813)	10,159 (22,396)	5,823 (12,838)	3,508 (7,733)
HHV Thermal Input, kWt	269,908	209,615	147,570	84,588	50,954
LHV Thermal Input, kWt	243,619	189,198	133,196	76,349	45,991
Raw Water Withdrawal, (m^3/min)/MWnet (gpm/MWnet)	–	–	–	–	–
Raw Water Consumption, (m^3/min)/MWnet (gpm/MWnet)	–	–	–	–	–

Exhibit 3-16. Case R6A-S part load plant power summary

Power Summary					
Percent Load	**100%**	**75%**	**50%**	**25%**	**10%**
Reciprocating Engine Power, MWe	113	85	57	28	11
Steam Turbine Power, MWe	–	–	–	–	–
Total Gross Power, MWe	**113**	**85**	**57**	**28**	**11**
Nameplate Capacity, MWe	**113**	**113**	**113**	**113**	**113**
Auxiliary Load Summary					
Air Cooled Condenser Fans	–	–	–	–	–
Ancillary Glycol Cooling Loops, kWe	687	504	327	173	118
Attemperating Air Fan, kWe	–	–	–	–	–
Reciprocating Engine Auxiliaries, kWe	226	169	113	56	23
Combustion Turbine Water Injection Pump, kWe	–	–	–	–	–
Condensate Pumps, kWe	–	–	–	–	–
Feedwater Pumps, kWe	–	–	–	–	–
Ground Water Pumps, kWe	–	–	–	–	–
Miscellaneous Balance of Plant,[A] kWe	375	320	265	210	177
Natural Gas Compression, kWe	–	–	–	–	–
SCR, kWe	5	5	4	2	1
Steam Turbine Auxiliaries, kWe	–	–	–	–	–
Transformer Losses, kWe	340	260	170	90	30
Total Auxiliaries, MWe	**2**	**1**	**1**	**1**	**0**
Net Power, MWe	**111**	**83**	**56**	**28**	**11**

[A]Includes plant control systems, lighting, HVAC, and miscellaneous low voltage loads

Exhibit 3-17. Case R6A-S part load air emissions summary

Emissions Summary					
Percent Load	**100%**	**75%**	**50%**	**25%**	**10%**
SO_2, kg/MWh-gross (lb/MWh-gross)	0.003 (0.008)	0.004 (0.008)	0.004 (0.008)	0.004 (0.010)	0.007 (0.015)
NOx, kg/MWh-gross (lb/MWh-gross)	0.043 (0.095)	0.045 (0.099)	0.047 (0.104)	0.053 (0.117)	0.074 (0.163)
Particulate, kg/MWh-gross (lb/MWh-gross)	0.077 (0.170)	0.081 (0.178)	0.127 (0.281)	0.166 (0.366)	0.246 (0.542)
Hg, kg/MWh-gross (lb/MWh-gross)	0.000 (0.000)	0.000 (0.000)	0.000 (0.000)	0.000 (0.000)	0.000 (0.000)
VOC, kg/MWh-gross (lb/MWh-gross)	0.120 (0.265)	0.125 (0.275)	0.131 (0.289)	0.148 (0.326)	0.205 (0.452)
CO, kg/MWh-gross (lb/MWh-gross)	0.129 (0.285)	0.134 (0.295)	0.141 (0.311)	0.159 (0.351)	0.220 (0.486)
CO_2, kg/MWh-gross (lb/MWh-gross)	433 (955)	449 (989)	473 (1,042)	532 (1,173)	730 (1,608)
CO_2, kg/MWh-net (lb/MWh-net)	440 (969)	456 (1,004)	480 (1,058)	542 (1,195)	753 (1,660)

All emissions are maintained at or below the environmental target emission limits across the entire load range.

Exhibit 3-18 displays the Case R6A-S itemized efficiencies (HHV net plant efficiency and HHV engine efficiency) and normalized auxiliary power consumption across the load range.

Exhibit 3-18. Case R6A-S part load itemized efficiencies

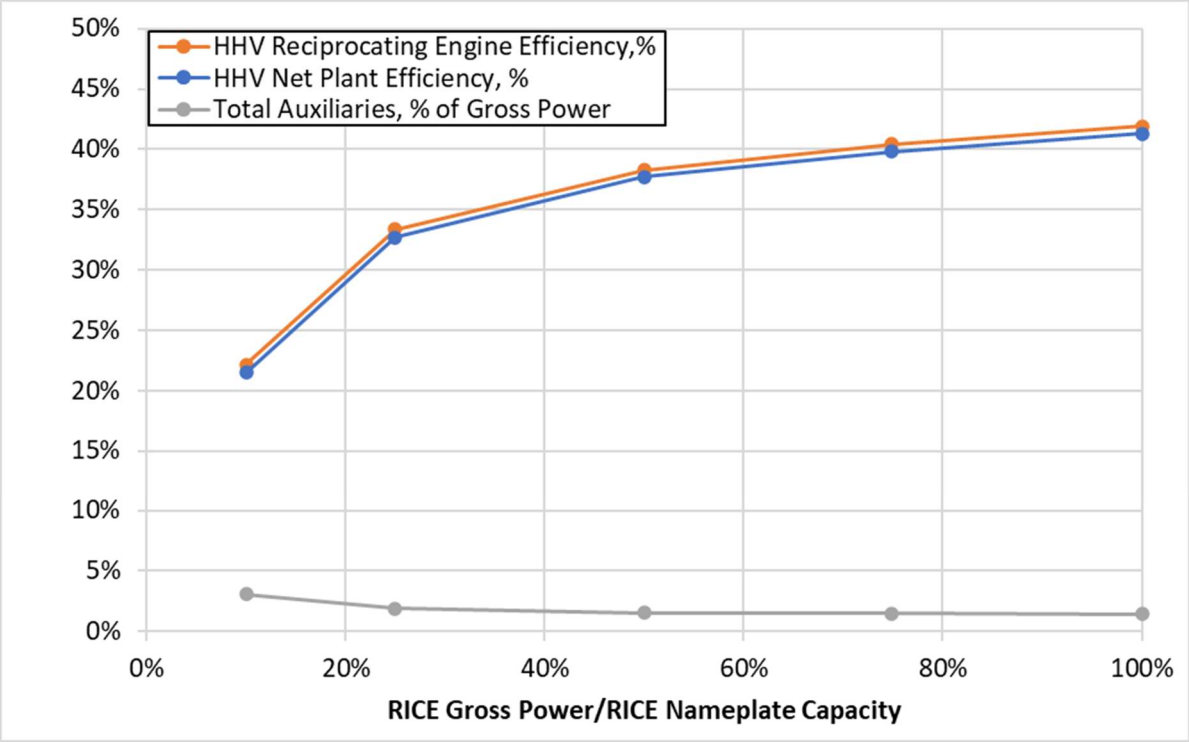

The decrease in part load net plant efficiency is primarily attributable to two key factors: 1) a decrease in the part load reciprocating engine efficiency, and 2) an increase in the normalized auxiliary power consumption. The decrease in the part load reciprocating engine efficiency is an expected occurrence.

To improve efficiency and emissions at loads below 20 percent, the engines run in skip firing mode, where there is no combustion in some of the cylinders.

3.3.6 Case R6A-E – Part Load Performance Results

Plant performance results are summarized at each discrete load point in Exhibit 3-19. Exhibit 3-20 displays a detailed breakdown of the auxiliary power requirement at each discrete load point. Air emissions at each discrete load point are summarized in Exhibit 3-21. The results presented in this section are reflective of steady-state operation. Performance associated with specific operating profiles (e.g., load-following, peaking) will differ.

Exhibit 3-19. Case R6A-E part load plant performance summary

Performance Summary									
Percent Load	**100%**	**75%**	**50%**	**25%**	**17%**	**13%**	**8%**	**4%**	**2%**
Reciprocating Engine Power, MWe	113	85	57	28	19	14	9	5	2
Steam Turbine Power, MWe	–	–	–	–	–	–	–	–	–
Total Gross Power, MWe	**113**	**85**	**57**	**28**	**19**	**14**	**9**	**5**	**2**
Nameplate Capacity, MWe	**113**	**113**	**113**	**113**	**113**	**113**	**113**	**113**	**113**
Total Auxiliaries, MWe	**2**	**1**	**1**	**1**	**0**	**0**	**0**	**0**	**0**
Total Auxiliaries, % of Gross Power	**1.4%**	**1.5%**	**1.6%**	**1.8%**	**2.1%**	**2.4%**	**2.9%**	**4.6%**	**9.9%**
Net Power, MWe	**111**	**84**	**56**	**28**	**18**	**14**	**9**	**4**	**2**
HHV Net Plant Efficiency, %	41.3%	40.9%	41.2%	39.9%	41.0%	39.4%	37.2%	31.8%	20.0%
HHV Net Plant Heat Rate, kJ/kWh (Btu/kWh)	8,717 (8,262)	8,812 (8,352)	8,729 (8,274)	9,028 (8,557)	8,778 (8,320)	9,128 (8,652)	9,686 (9,181)	11,323 (10,732)	18,025 (17,084)
HHV Reciprocating Engine Efficiency, %	41.9%	41.5%	41.9%	40.6%	41.9%	40.4%	38.3%	33.3%	22.2%
LHV Net Plant Efficiency, %	45.8%	45.3%	45.7%	44.2%	45.4%	43.7%	41.2%	35.2%	22.1%
LHV Net Plant Heat Rate, kJ/kWh (Btu/kWh)	7,868 (7,457)	7,954 (7,539)	7,879 (7,468)	8,149 (7,724)	7,923 (7,510)	8,239 (7,809)	8,743 (8,287)	10,220 (9,687)	16,269 (15,420)
LHV Reciprocating Engine Efficiency, %	46.4%	45.9%	46.4%	45.0%	46.4%	44.8%	42.4%	36.9%	24.6%
Steam Turbine Cycle Efficiency, %	–	–	–	–	–	–	–	–	–
Steam Turbine Heat Rate, kJ/kWh (Btu/kWh)	–	–	–	–	–	–	–	–	–
Condenser Duty, GJ/hr (MMBtu/hr)	–	–	–	–	–	–	–	–	–
Natural Gas Feed Flow, kg/hr (lb/hr)	18,581 (40,963)	14,080 (31,041)	9,291 (20,482)	4,790 (10,560)	3,097 (6,827)	2,405 (5,302)	1,693 (3,733)	971 (2,140)	585 (1,289)
HHV Thermal Input, kWt	269,908	204,534	134,954	69,580	44,985	34,936	24,595	14,098	8,492
LHV Thermal Input, kWt	243,619	184,612	121,809	62,803	40,603	31,533	22,199	12,725	7,665
Raw Water Withdrawal, (m^3/min)/MWnet (gpm/MWnet)	–	–	–	–	–	–	–	–	–
Raw Water Consumption, (m^3/min)/MWnet (gpm/MWnet)	–	–	–	–	–	–	–	–	–

Exhibit 3-20. Case R6A-E part load plant power summary

Power Summary									
Percent Load	**100%**	**75%**	**50%**	**25%**	**17%**	**13%**	**8%**	**4%**	**2%**
Reciprocating Engine Power, MWe	113	85	57	28	19	14	9	5	2
Steam Turbine Power, MWe	–	–	–	–	–	–	–	–	–
Total Gross Power, MWe	**113**	**85**	**57**	**28**	**19**	**14**	**9**	**5**	**2**
Nameplate Capacity, MWe	**113**	**113**	**113**	**113**	**113**	**113**	**113**	**113**	**113**
Auxiliary Load Summary									
Air Cooled Condenser Fans	–	–	–	–	–	–	–	–	–
Ancillary Glycol Cooling Loops, kWe	687	512	343	169	114	84	55	29	20
Attemperating Air Fan, kWe	–	–	–	–	–	–	–	–	–
Reciprocating Engine Auxiliaries, kWe	226	169	113	56	38	28	19	9	4
Combustion Turbine Water Injection Pump, kWe	–	–	–	–	–	–	–	–	–
Condensate Pumps, kWe	–	–	–	–	–	–	–	–	–
Feedwater Pumps, kWe	–	–	–	–	–	–	–	–	–
Ground Water Pumps, kWe	–	–	–	–	–	–	–	–	–
Miscellaneous Balance of Plant,[A] kWe	375	320	265	210	192	182	173	164	159
Natural Gas Compression, kWe	–	–	–	–	–	–	–	–	–
SCR, kWe	5	4	3	2	1	1	1	0	0
Steam Turbine Auxiliaries, kWe	–	–	–	–	–	–	–	–	–
Transformer Losses, kWe	340	255	170	85	57	43	28	15	5
Total Auxiliaries, MWe	**2**	**1**	**1**	**1**	**0**	**0**	**0**	**0**	**0**
Net Power, MWe	**111**	**84**	**56**	**28**	**18**	**14**	**9**	**4**	**2**

[A]Includes plant control systems, lighting, HVAC, and miscellaneous low voltage loads

Exhibit 3-21. Case R6A-E part load air emissions summary

Emissions Summary									
Percent Load	**100%**	**75%**	**50%**	**25%**	**17%**	**13%**	**8%**	**4%**	**2%**
SO_2, kg/MWh-gross (lb/MWh-gross)	0.003 (0.008)	0.003 (0.008)	0.003 (0.008)	0.003 (0.008)	0.003 (0.008)	0.004 (0.008)	0.004 (0.008)	0.004 (0.010)	0.007 (0.015)
NOx, kg/MWh-gross (lb/MWh-gross)	0.043 (0.095)	0.043 (0.096)	0.043 (0.095)	0.044 (0.098)	0.043 (0.095)	0.045 (0.099)	0.047 (0.104)	0.053 (0.117)	0.074 (0.163)
Particulate, kg/MWh-gross (lb/MWh-gross)	0.077 (0.17)	0.083 (0.182)	0.077 (0.170)	0.094 (0.207)	0.077 (0.170)	0.081 (0.178)	0.127 (0.281)	0.166 (0.366)	0.246 (0.542)
Hg, kg/MWh-gross (lb/MWh-gross)	0.00 (0.00)	0.000 (0.000)	0.000 (0.000)	0.000 (0.000)	0.000 (0.000)	0.000 (0.000)	0.000 (0.000)	0.000 (0.000)	0.000 (0.000)
VOC, kg/MWh-gross (lb/MWh-gross)	0.120 (0.265)	0.121 (0.268)	0.120 (0.265)	0.124 (0.273)	0.120 (0.265)	0.125 (0.275)	0.131 (0.289)	0.148 (0.326)	0.205 (0.452)
CO, kg/MWh-gross (lb/MWh-gross)	0.129 (0.285)	0.130 (0.288)	0.129 (0.285)	0.133 (0.294)	0.129 (0.285)	0.134 (0.295)	0.141 (0.311)	0.159 (0.351)	0.220 (0.486)
CO_2, kg/MWh-gross (lb/MWh-gross)	433 (955)	437 (965)	433 (955)	446 (984)	433 (955)	449 (989)	473 (1,042)	532 (1,173)	730 (1,608)
CO_2, kg/MWh-net (lb/MWh-net)	440 (969)	445 (979)	441 (970)	455 (1002)	443 (976)	460 (1,013)	487 (1,073)	558 (1,229)	810 (1,786)

All emissions are maintained at or below the environmental target emission limits across the entire load range.

Exhibit 3-22 displays the Case R6A-E itemized efficiencies (HHV net plant efficiency and HHV engine efficiency) and normalized auxiliary power consumption across the load range.

Exhibit 3-22. Case R6A-E part load itemized efficiencies

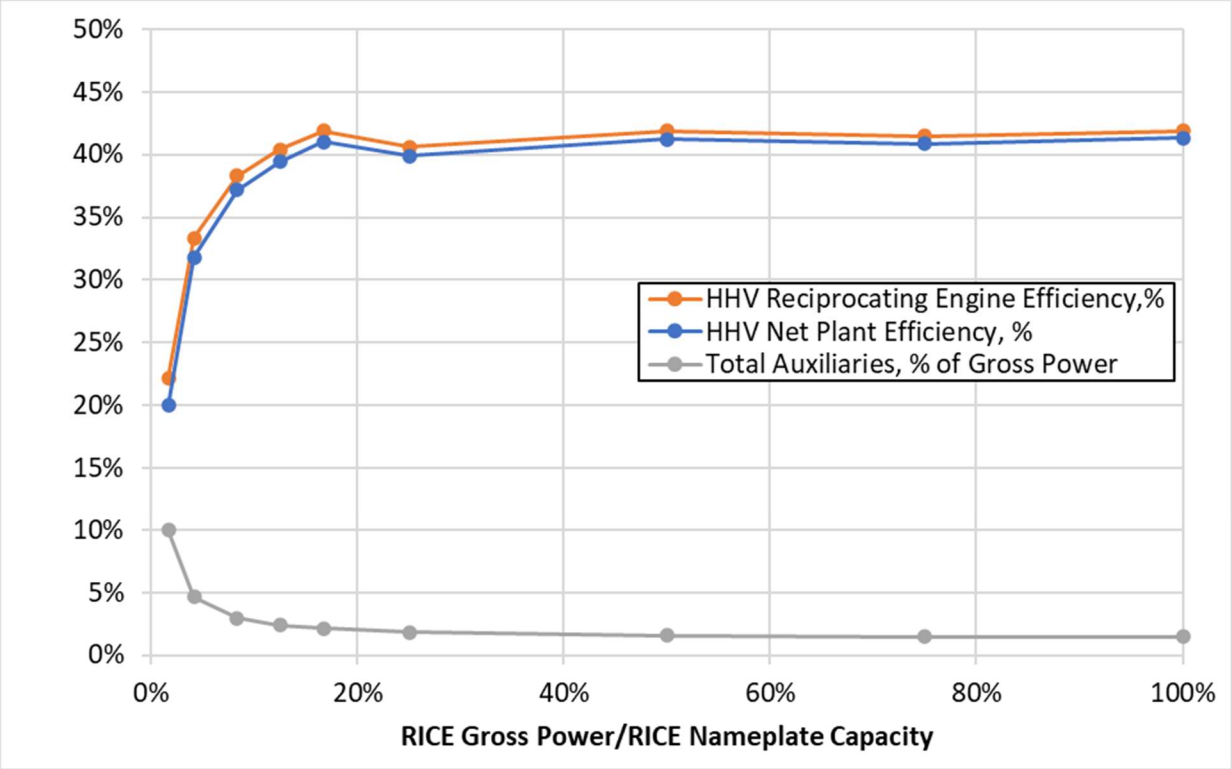

The decrease in part load net plant efficiency is primarily attributable to two key factors: 1) a decrease in the part load reciprocating engine efficiency, and 2) an increase in the normalized auxiliary power consumption. The decrease in the part load reciprocating engine efficiency is an expected occurrence.

To improve efficiency and emissions at loads below 20 percent (individual unit), the engines run in skip firing mode, where there is no combustion in some of the cylinders.

3.3.7 Case R6A-S – Major Equipment List

Case R6A-S – Account 3: Feedwater and Miscellaneous Balance of Plant Systems

Equipment No.	Description	Type	Design Condition	Operating Qty.	Spares
1	Service Air Compressors	Flooded Screw	13 m^3/min @ 0.7 MPa (450 scfm @ 100 psig)	2	1
2	Instrument Air Dryers	Duplex, regenerative	13 m^3/min (450 scfm)	2	1
3	Engine-Driven Fire Pump	Vertical turbine, diesel engine	3,785 lpm @ 110 m H_2O (1,000 gpm @ 350 ft H_2O)	1	1
4	Fire Service Booster Pump	Two-stage horizontal centrifugal	2,650 lpm @ 80 m H_2O (700 gpm @ 250 ft H_2O)	1	1

Equipment No.	Description	Type	Design Condition	Operating Qty.	Spares
5	Liquid Waste Treatment System	–	10 years, 24-hour storm	1	0
6	Gas Pipeline	Underground, coated carbon steel, wrapped cathodic protection	17 m^3/min @ 2.8 MPa (587 acfm @ 400.3 psia) 39 cm (16 in) standard wall pipe	16 km (10 mile)	0
7	Gas Metering Station	–	17 m^3/min (587 acfm)	1	0

Case R6A-S – Account 6: Reciprocating Internal Combustion Engine and Accessories

Equipment No.	Description	Type	Design Condition	Operating Qty.	Spares
1	Reciprocating Internal Combustion Engine Generator Package	Spark ignited	20 MW Generator: 20 MVA @ 0.85 p.f., 18 kV, 60 Hz, 3-phase	6	0

Case R6A-S – Account 7: Ductwork, and Stack

Equipment No.	Description	Type	Design Condition	Operating Qty.	Spares
1	Stack	CS plate, type 409SS liner	15 m (50 ft) high x 1.8 m (6 ft) diameter	6	0
2	CO Catalyst	–	120,000 kg/hr (260,000 lb/hr)	6	0
3	SCR Reactor	–	120,000 kg/hr (260,000 lb/hr)	6	0
4	SCR Catalyst	–	Space available for an additional catalyst layer	1 layer	0
5	Dilution Air Blowers	Centrifugal	5 m^3/min @ 108 cm WG (170 scfm @ 42 in WG)	6	1
6	Ammonia Feed Pump	Centrifugal	1.0 lpm @ 90 m H_2O (0.3 gpm @ 300 ft H_2O)	6	1
7	Ammonia Storage Tank	Horizontal tank	89,000 liter (23,000 gal)	1	0

Case R6A-S – Account 9: Cooling System

Equipment No.	Description	Type	Design Condition	Operating Qty.	Spares
1	Glycol Cooling Loops	Industrial grade, air to glycol, closed loop heat exchanger	40 GJ/hr (38 MMBtu/hr) heat duty	5	0

Case R6A-S – Account 11: Accessory Electric Plant

Equipment No.	Description	Type	Design Condition	Operating Qty.	Spares
1	CG Transformer	Oil-filled	18 kV/345 kV, 20 MVA, 3-ph, 60 Hz	6	0
2	Medium Voltage Transformer	Oil-filled	18 kV/4.16 kV, 1 MVA, 3-ph, 60 Hz	1	1
3	Low Voltage Transformer	Dry ventilated	4.16 kV/480 V, 0 MVA, 3-ph, 60 Hz	1	1
4	CG Isolated Phase Bus Duct and Tap Bus	Aluminum, self-cooled	18 kV, 3-ph, 60 Hz	6	0
5	Medium Voltage Switchgear	Metal clad	4.16 kV, 3-ph, 60 Hz	1	1
6	Low Voltage Switchgear	Metal enclosed	480 V, 3-ph, 60 Hz	1	1
7	Emergency Diesel Generator	Sized for emergency shutdown	750 kW, 480 V, 3-ph, 60 Hz	1	0

Case R6A-S – Account 12: Instrumentation and Control

Equipment No.	Description	Type	Design Condition	Operating Qty.	Spares
1	DCS - Main Control	Monitor/keyboard; Operator printer (laser color); Engineering printer (laser B&W)	Operator stations/printers and engineering stations/printers	1	0
2	DCS - Processor	Microprocessor with redundant input/output	N/A	1	0
3	DCS - Data Highway	Fiber optic	Fully redundant, 25% spare	1	0

3.3.8 Case R6A-S – Cost Estimating

The cost estimating method was described previously in Section 2.8. Exhibit 3-23 shows a detailed breakdown of the capital costs; Exhibit 3-24 shows the owner's costs, along with the TOC; Exhibit 3-25 shows the initial and annual O&M costs; and Exhibit 3-26 and Exhibit 3-27 show the startup and shutdown costs.

The estimated TPC of Case R6A-S is $139 million. The project contingency is 13.9 percent of the TPC.

Exhibit 3-23. Case R6A-S total plant cost details

Case:		R6A-S	– Large RICE (6x)					Estimate Type:		Conceptual
								Cost Base:		Dec 2018
Item No.	Description	Equipment Cost	Material Cost	Labor		Bare Erected Cost	Eng'g CM H.O.& Fee	Contingencies		Total Plant Cost
				Direct	Indirect			Process	Project	$/1,000
3	Feedwater & Miscellaneous BOP Systems									
3.4	Service Water Systems	$300	$573	$1,857	$0	$2,730	$546	$0	$655	$3,931
3.6	Natural Gas Pipeline and Start-Up System	$3,118	$134	$101	$0	$3,352	$670	$0	$603	$4,626
3.9	Miscellaneous Plant Equipment	$4,799	$629	$2,439	$0	$7,866	$1,573	$0	$1,888	$11,328
	SUBTOTAL 3	**$8,217**	**$1,337**	**$4,396**	**$0**	**$13,949**	**$2,790**	**$0**	**$3,147**	**$19,885**
6	Reciprocating Internal Combustion Engine & Accessories									
6.1	RICE Generator	$49,965	$0	$3,041	$0	$53,005	$10,601	$0	$9,541	$73,147
6.3	RICE Accessories	$897	$0	$55	$0	$951	$190	$0	$171	$1,313
6.5	RICE Foundations	$0	$331	$357	$0	$688	$138	$0	$165	$990
	SUBTOTAL 6	**$50,861**	**$331**	**$3,452**	**$0**	**$54,644**	**$10,929**	**$0**	**$9,877**	**$75,450**
7	Ductwork & Stack									
7.3	Ductwork	$0	$433	$301	$0	$734	$147	$0	$132	$1,012
7.4	Stack	$1,919	$0	$355	$0	$2,274	$455	$0	$409	$3,139
7.5	Ductwork & Stack Foundations	$0	$323	$303	$0	$625	$125	$0	$150	$901
7.6	Selective Catalytic Reduction System	$622	$261	$365	$0	$1,248	$250	$0	$225	$1,722
7.7	Carbon Monoxide Reduction System	$0	$81	$54	$0	$135	$27	$0	$24	$186
	SUBTOTAL 7	**$2,541**	**$1,098**	**$1,377**	**$0**	**$5,017**	**$1,003**	**$0**	**$941**	**$6,960**
9	Cooling Water System									
9.6	Component Cooling Water System[A]	$1,161	$0	$891	$0	$2,052	$410	$0	$369	$2,832
	SUBTOTAL 9	**$1,161**	**$0**	**$891**	**$0**	**$2,052**	**$410**	**$0**	**$369**	**$2,832**
11	Accessory Electric Plant									
11.1	Generator Equipment	$851	$0	$642	$0	$1,493	$299	$0	$269	$2,061
11.2	Station Service Equipment	$759	$0	$65	$0	$825	$165	$0	$148	$1,138
11.3	Switchgear & Motor Control	$1,084	$0	$188	$0	$1,272	$254	$0	$229	$1,756
11.4	Conduit & Cable Tray	$0	$262	$755	$0	$1,017	$203	$0	$183	$1,404
11.5	Wire & Cable	$0	$391	$699	$0	$1,090	$218	$0	$196	$1,505
11.6	Protective Equipment	$26	$0	$89	$0	$115	$23	$0	$21	$158
11.7	Standby Equipment	$265	$0	$244	$0	$509	$102	$0	$92	$702
11.8	Main Power Transformers	$1,912	$0	$39	$0	$1,951	$390	$0	$351	$2,692
11.9	Electrical Foundations	$0	$25	$64	$0	$89	$18	$0	$21	$128
	SUBTOTAL 11	**$4,897**	**$678**	**$2,786**	**$0**	**$8,361**	**$1,672**	**$0**	**$1,510**	**$11,544**
12	Instrumentation & Control									
12.1	RICE Control Equipment	$60	$0	$38	$0	$99	$20	$0	$18	$136
12.2	RICE Control Equipment	$116	$0	$74	$0	$190	$38	$0	$34	$262
12.4	Other Major Component Control Equipment	$162	$0	$103	$0	$266	$53	$0	$48	$367
12.5	Signal Processing Equipment	$135	$0	$4	$0	$139	$28	$0	$25	$192

Case:		R6A-S	– Large RICE (6x)					Estimate Type:		Conceptual
								Cost Base:		Dec 2018
Item No.	Description	Equipment Cost	Material Cost	Labor		Bare Erected Cost	Eng'g CM H.O.& Fee	Contingencies		Total Plant Cost
				Direct	Indirect			Process	Project	$/1,000
12.6	Control Boards, Panels & Racks	$36	$0	$22	$0	$58	$12	$0	$10	$80
12.7	Distributed Control System Equipment	$1,989	$0	$61	$0	$2,049	$410	$0	$369	$2,828
12.8	Instrument Wiring & Tubing	$164	$131	$525	$0	$821	$164	$0	$148	$1,133
12.9	Other Instrumentation & Controls Equipment	$114	$0	$263	$0	$377	$75	$0	$68	$520
	SUBTOTAL 12	**$2,776**	**$131**	**$1,091**	**$0**	**$3,998**	**$800**	**$0**	**$720**	**$5,518**
13	**Improvements to Site**									
13.1	Site Preparation	$0	$281	$5,972	$0	$6,254	$1,251	$0	$1,501	$9,005
13.2	Site Improvements	$0	$905	$1,195	$0	$2,100	$420	$0	$504	$3,024
13.3	Site Facilities	$868	$0	$911	$0	$1,779	$356	$0	$427	$2,562
	SUBTOTAL 13	**$868**	**$1,186**	**$8,078**	**$0**	**$10,133**	**$2,027**	**$0**	**$2,432**	**$14,592**
14	**Buildings & Structures**									
14.1	RICE Area	$0	$161	$85	$0	$246	$49	$0	$44	$340
14.4	Administration Building	$0	$194	$132	$0	$326	$65	$0	$59	$450
14.7	Machine Shop	$0	$290	$186	$0	$476	$95	$0	$86	$657
14.8	Warehouse	$0	$226	$136	$0	$362	$72	$0	$65	$500
14.9	Other Buildings & Structures	$0	$165	$120	$0	$285	$57	$0	$51	$394
	SUBTOTAL 14	**$0**	**$1,037**	**$659**	**$0**	**$1,696**	**$339**	**$0**	**$305**	**$2,341**
	TOTAL	**$71,321**	**$5,799**	**$22,731**	**$0**	**$99,851**	**$19,970**	**$0**	**$19,301**	**$139,122**

[A] Component cooling water system consists of a closed loop system and glycol-to-air heat exchangers. The system utilizes a 45 percent solution of glycol and water

Exhibit 3-24. Case R6A-S owner's costs

Description	$/1,000
Pre-Production Costs	
6 Months All Labor	$1,346
1 Month Maintenance Materials	$155
1 Month Non-fuel Consumables	$80
1 Month Waste Disposal	$0
25% of 1 Months Fuel Cost at 100% CF	$743
2% of TPC	$2,782
Total	**$5,107**
Inventory Capital	
60-day supply of consumables at 100% CF	$160
0.5% of TPC (spare parts)	$696
Total	**$856**
Other Costs	
Initial Cost for Catalyst and Chemicals	$377
Land	$60
Other Owner's Costs	$20,868
Financing Costs	$3,756
Total Overnight Costs (TOC)	**$170,146**

Exhibit 3-25. Case R6A-S initial and annual operating and maintenance costs

Case:	R6A-S	– Large RICE (6x)			Cost Base:	Dec 2018
Plant Size (MW, gross):	111		Heat Rate-net (Btu/kWh):		8,262	
Operating & Maintenance Labor						
Operating Labor			**Operating Labor Requirements per Shift**			
Operating Labor Rate (base):	38.50	**$/hour**	Skilled Operator:	1.0		
Operating Labor Burden:	30.00	**% of base**	Operator:	0.0		
Labor O-H Charge Rate:	25.00	**% of labor**	Foreman:	1.0		
			Lab Techs, etc.:	0.5		
			Total:	**2.5**		
Fixed Operating Costs						
						Annual Cost ($)
					Annual Operating Labor:	$1,096,095
					Maintenance Labor:	$1,057,325
					Administrative & Support Labor:	$538,355
					Property Taxes and Insurance:	$2,782,434
					Total:	**$5,474,210**
Variable Operating Costs						
						Annual Cost ($)
					Maintenance Material:	$1,865,868 x CF
Consumables						
	Initial Fill	**Per Day**	**Per Unit**	**Initial Fill**		**Annual Cost ($)**
Ammonia (19 wt%, ton):	0	8.1	$300.00	$0		$887,245 x CF
SCR Catalyst (ft^3):	912	0.50	$150.00	$136,772		$27,354 x CF
CO Catalyst (ft^3):	60	0.03	$4,000.00	$239,955		$47,991 x CF
Subtotal:				**$376,727**		**$962,591 x CF**
Waste Disposal						
SCR Catalyst (ft^3):	0	0.50	$2.50	$0		$456 x CF
CO Catalyst (ft^3):	0	0.03	$2.50	$0		$30 x CF
Subtotal:				**$0**		$486 x CF
			Variable Operating Costs Total:	**$376,727**		**$2,828,944 x CF**
Fuel Cost						
Natural Gas (MMBtu):	0	22,103	$4.42	$0		$35,659,048 x CF
			Fuel Costs Total:	**$0**		**$35,659,048 x CF**

Exhibit 3-26. Case R6A synchronization startup and shutdown costs

Event to Synchronization		Fast Start	Normal Start	Shutdown
Energy and Duration				
Energy Produced	MWh	-	-	-
Duration	min	1	2	1
NG Heat Input (HHV)	MMBtu	5	19	7
House Energy Consumed	MWh	0.0	0.0	0.0
Aux Boiler Heat Input (HHV)	MMBtu	-	-	-
Costs				
Energy Sold Cost	$	-	-	-
Variable O&M Cost	$	-	5	-
Natural Gas Cost	$	25	85	30
House Energy Cost	$	-	5	-
Total Cost for Event	**$**	**25**	**95**	**30**

Exhibit 3-27. Case R6A full load startup and shutdown costs

Event to Full Load		Fast Start	Normal Start	Shutdown
Energy and Duration				
Energy Produced	MWh	3.6	7.8	0.6
Duration	min	5	10	2
NG Heat Input (HHV)	MMBtu	54	96	11
House Energy Consumed	MWh	0.1	0.2	0.0
Aux Boiler Heat Input (HHV)	MMBtu	-	-	-
Costs				
Energy Sold Cost	$	(215)	(470)	(35)
Variable O&M Cost	$	15	30	5
Natural Gas Cost	$	240	425	50
House Energy Cost	$	5	15	-
Total Cost for Event	**$**	**45**	**-**	**20**

3.3.9 Case R12A-S – Process Description

The process description for Case R12A-S is the same as R6A-S (see Section 3.3.3), so it is not repeated here.

3.3.10 Case R12A-S – Full Load Performance Results

The BFD for R12A-S is shown in Exhibit 3-28. Stream tables that outline process data for the numbered streams in the BFD are provided in Exhibit 3-29. The BFD shows only one of the trains, but the flow rates in the stream table are the total system. As previously mentioned, the difference between R12A-S and R12A-E is purely operational. As such, only the results of Case R12A-S are provided in detail. A comparison of R12A-S and R12A-E is provided in Section 3.3.15. Full stream tables are only provided for the 100 percent load point.

Exhibit 3-28. Case R12A-S BFD, RICE

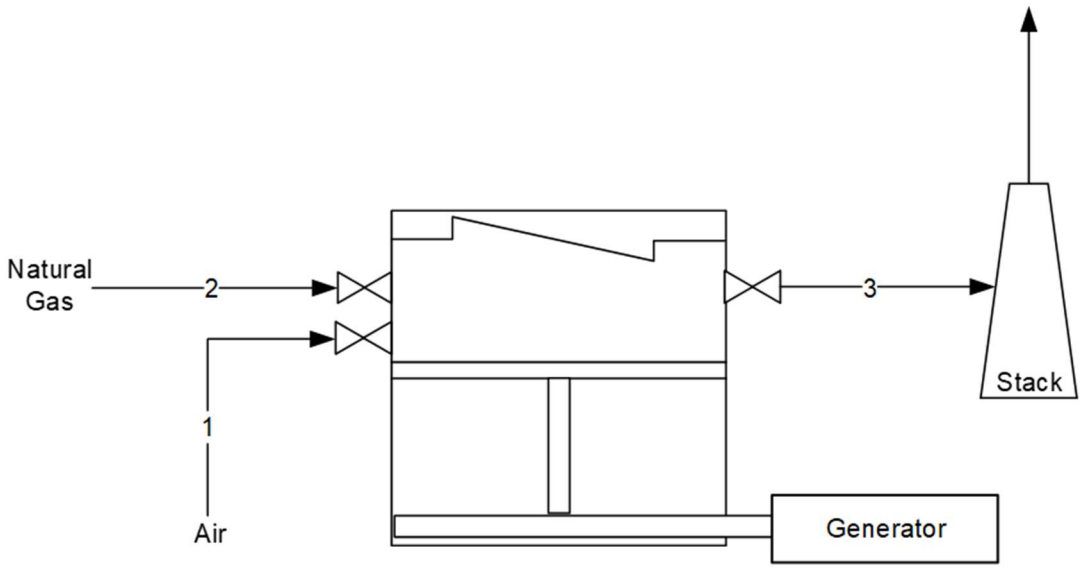

Exhibit 3-29. Case R12A-S stream table, RICE

	1	2	3
V-L Mole Fraction			
Ar	0.0092	0.0000	0.0088
CH_4	0.0000	0.9310	0.0009
CH_4S	0.0000	0.0000	0.0000
C_2H_6	0.0000	0.0320	0.0000
C_3H_8	0.0000	0.0070	0.0000
C_4H_{10}	0.0000	0.0040	0.0000
CO_2	0.0003	0.0100	0.0486
H_2O	0.0099	0.0000	0.1022
N_2	0.7732	0.0160	0.7364
O_2	0.2074	0.0000	0.1031
SO_2	0.0000	0.0000	0.0000
Total	1.0000	1.0000	1.0000
V-L Flowrate, kg_{mol}/hr	21,675	1,075	22,781
V-L Flowrate, kg/hr	625,468	18,632	644,100
Solids Flowrate, kg/hr	0	0	0
Temperature, °C	15	27	367
Pressure, MPa, abs	0.10	2.76	0.10
Steam Table Enthalpy, kJ/kg[A]	30.23	24.39	562.11
AspenPlus Enthalpy, kJ/kg[B]	-97.58	-4,484.84	-1,180.20
Density, kg/m^3	1.2	20.5	0.5
V-L Molecular Weight	28.857	17.328	28.273
V-L Flowrate, lb_{mol}/hr	47,785	2,371	50,224
V-L Flowrate, lb/hr	1,378,920	41,077	1,419,997
Solids Flowrate, lb/hr	0	0	0
Temperature, °F	59	80	692
Pressure, psia	14.7	400.3	14.8
Steam Table Enthalpy, Btu/lb[A]	13.0	10.5	241.7
AspenPlus Enthalpy, Btu/lb[B]	-42.0	-1,928.1	-507.4
Density, lb/ft^3	0.076	1.279	0.034

[A]Steam table reference conditions are 32.02°F & 0.089 psia
[B]Aspen thermodynamic reference state is the component's constituent elements in an ideal gas state at 25°C and 1 atm

At full load, the plant produces a net output of 111 MW at a net plant efficiency of 41.0 percent (HHV basis). Full load performance for Case R12A-S is summarized in Exhibit 3-30. Exhibit 3-31 presents a detailed breakdown of the auxiliary power requirements at full load.

Exhibit 3-30. Case R12A-S plant performance summary

Performance Summary	
Reciprocating Engine Power, MWe	113
Steam Turbine Power, MWe	–
Total Gross Power, MWe	**113**
Nameplate Capacity, MWe	**113**
Balance of Plant, kWe	1,490
Total Auxiliaries, MWe	**1**
Net Power, MWe	**111**
HHV Net Plant Efficiency, %	41.0%
HHV Net Plant Heat Rate, kJ/kWh (Btu/kWh)	8,777 (8,319)
HHV Reciprocating Engine Efficiency, %	41.6%
LHV Net Plant Efficiency, %	45.4%
LHV Net Plant Heat Rate, kJ/kWh (Btu/kWh)	7,922 (7,509)
LHV Reciprocating Engine Efficiency, %	46.05%
Steam Turbine Cycle Efficiency, %	–
Steam Turbine Heat Rate, kJ/kWh (Btu/kWh)	–
Condenser Duty, GJ/hr (MMBtu/hr)	–
Natural Gas Feed Flow, kg/hr (lb/hr)	18,632 (41,077)
HHV Thermal Input, kWt	270,659
LHV Thermal Input, kWt	244,296
Raw Water Withdrawal, (m^3/min)/MWnet (gpm/MWnet)	–
Raw Water Consumption, (m^3/min)/MWnet (gpm/MWnet)	–

Exhibit 3-31. Case R12A-S plant power summary

Power Summary	
Reciprocating Engine Power, MWe	113
Steam Turbine Power, MWe	–
Total Gross Power, MWe	**113**
Nameplate Total Capacity, MWe	**113**
Auxiliary Load Summary	
Air Cooled Condenser Fans	–
Ancillary Glycol Cooling Loops, kWe	674
Attemperating Air Fan, kWe	–
Reciprocating Engine Auxiliaries, kWe	225
Combustion Turbine Water Injection Pump, kWe	–
Condensate Pumps, kWe	–
Feedwater Pumps, kWe	–
Ground Water Pumps, kWe	–
Miscellaneous Balance of Plant,[A] kWe	246
Natural Gas Compression, kWe	–
SCR, kWe	5
Steam Turbine Auxiliaries, kWe	–
Transformer Losses, kWe	340
Total Auxiliaries, MWe	**1**
Net Power, MWe	**111**

[A]Includes plant control systems, lighting, HVAC, and miscellaneous low voltage loads

3.3.10.1 Environmental Performance

The environmental targets for emissions of NOx, SO_2, and PM were presented in Section 2.3. A summary of the plant air emissions for Case R12A-S is presented in Exhibit 3-32.

Exhibit 3-32. Case R12A-S air emissions

	kg/GJ (lb/MMBtu)	tonne/year (ton/year)[A]	kg/MWh (lb/MWh)[B]
SO_2	0.000 (0.001)	3 (4)	0.004 (0.008)
NOx	0.005 (0.012)	43 (47)	0.043 (0.095)
Particulate	0.009 (0.021)	77 (85)	0.078 (0.172)
Hg	0.000 (0.000)	0 (0)	0.000 (0.000)
VOC	0.014 (0.032)	118 (131)	0.120 (0.265)
CO	0.015 (0.035)	127 (140)	0.129 (0.285)
CO_2	50 (116)	426,619 (470,267)	433 (954)
CO_2[C]	-	-	439 (967)

[A]Calculations based on a 100 percent capacity factor
[B]Emissions based on gross power except where otherwise noted
[C]CO_2 emissions based on net power instead of gross power

For the purpose of this report, the natural gas was assumed to contain the domestic average value of total sulfur of 0.34 gr/100 scf ($4.71x10^{-4}$ lb-S/MMBtu). [9] It was also assumed that the added CH_4S was the sole contributor of sulfur to the natural gas. No sulfur capture systems were required.

Uncontrolled NOx emissions from the engine are about 110 ppmvd at 15 percent O_2. An SCR unit then further reduces the NOx concentration to 5 ppmvd at 15 percent O_2. [16]

The pipeline natural gas was assumed to contain no Hg or HCl, resulting in zero emissions.

RICE produces relatively high uncontrolled CO (166 ppmvd at 15 percent O_2) and VOC (82 ppmvd at 15 percent O_2) emissions. A CO catalyst is used to control the CO emissions to 16 ppmvd at 15 percent O_2 and the VOC emissions to 26 ppmvd at 15 percent O_2.

The production of PM is a result of system inefficiencies and is not produced or emitted in any significant amount.

CO_2 emissions represent the uncontrolled discharge from the process.

The carbon balance for the plant is shown in Exhibit 3-33. The carbon input to the plant consists of carbon in the natural gas and carbon in the air. Carbon leaves the plant as CO_2 through the stack.

Exhibit 3-33. Case R12A-S carbon balance

Carbon In		Carbon Out	
	kg/hr (lb/hr)		kg/hr (lb/hr)
Natural Gas	13,458 (29,669)	Stack Gas	13,543 (29,857)
Air (CO_2)	85 (188)		
Total	**13,543 (29,857)**	**Total**	**13,543 (29,857)**

As shown in Exhibit 3-34, the sulfur content of the natural gas is insignificant. All sulfur in the natural gas is emitted in the stack gas.

Exhibit 3-34. Case R12A-S sulfur balance

Sulfur In		Sulfur Out	
	kg/hr (lb/hr)		kg/hr (lb/hr)
Natural Gas	0.2 (0.4)	Stack Gas	0.2 (0.4)
Total	**0.2 (0.4)**	**Total**	**0.2 (0.4)**

No water is used in the RICE cases.

3.3.10.2 Energy and Mass Balance Diagrams

An energy and mass balance diagram is shown for Case R12A-S in Exhibit 3-35.

An overall plant energy balance is provided in tabular form in Exhibit 3-36. The power out is the RICE power prior to generator losses. The power at the generator terminals (shown in Exhibit 3-30) is calculated by multiplying the power out by the generator efficiency (97.7 percent).

Exhibit 3-35. Case R12A-S energy and mass balance, RICE

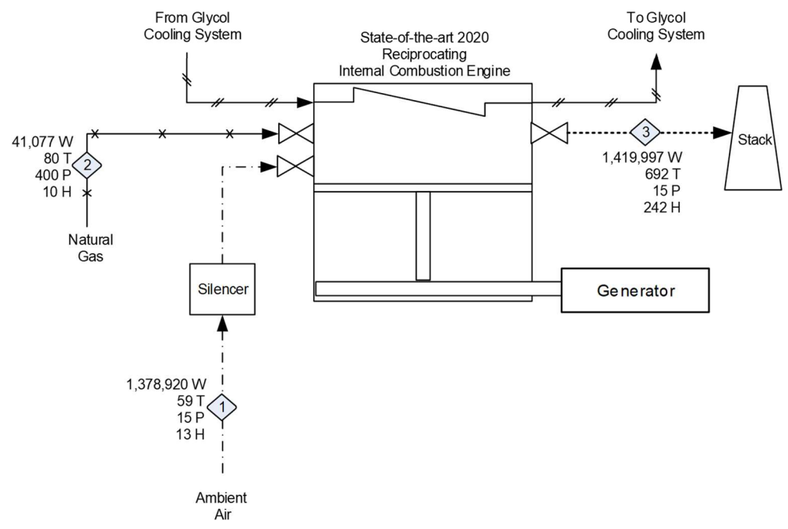

LEGEND

- Air
- Natural Gas
- Water
- Flue Gas
- Glycol

W	Flowrate, lbm/hr
T	Temperature, °F
P	Absolute Pressure, PSIA
H	Enthalpy, Btu/lbm
MWe	Power, Megawatts Electrical

Notes:
1. Enthalpy reference point is natural state at 32 °F and 0.08865 psia

PLANT PERFORMANCE SUMMARY

Gross Plant Power:	113 MWe
Auxiliary Load:	1 MWe
Net Plant Power:	111 MWe
Net Plant Efficiency, HHV:	41.0%
Net Plant Heat Rate, HHV:	8,319 Btu/kWh

NATIONAL ENERGY TECHNOLOGY LABORATORY

DOE/NETL

NGSC
CASE R12A-S

ENERGY AND MASS BALANCE DIAGRAM

NATURAL GAS SIMPLE CYCLE PLANT
CASE R12A-S
12 X STATE-OF-THE-ART 2020 RECIPROCATING
INTERNAL COMBUSTION ENGINE

DWG. NO.	PAGES
FPB-EMB-CS-R12A-S-PG-1	1 OF 1

This page intentionally left blank

Exhibit 3-36. Case R12A-S overall energy balance (0°C [32°F] reference)

	HHV	Sensible + Latent	Power	Total
Heat In GJ/hr (MMBtu/hr)				
Natural Gas	974 (924)	0.7 (0.6)	–	975 (924)
Air	–	19 (18)	–	19 (18)
Raw Water Makeup	–	0.0 (0.0)	–	0.0 (0.0)
Auxiliary Power	–	–	5.4 (5.1)	5.4 (5.1)
TOTAL	**974 (924)**	**20 (19)**	**5.4 (5.1)**	**999 (947)**
Heat Out GJ/hr (MMBtu/hr)				
Stack Gas	–	362 (343)	–	362 (343)
Sulfur	–	–	–	–
Motor Losses and Design Allowances	–	–	19 (18)	19 (18)
Cooling Load[A]	–	199 (189)	–	199 (189)
CO_2 Product Stream	–	–	–	–
Deaerator Vent	–	–	–	–
Ambient Losses[B]	–	5.4 (5.1)	–	5.4 (5.1)
Power	–	–	405 (384)	405 (384)
TOTAL	**–**	**566 (537)**	**424 (402)**	**990 (939)**
Unaccounted Energy[C]	–	9.0 (8.5)	–	9.0 (8.5)

[A]Includes miscellaneous cooling loads
[B]Ambient losses include all losses to the environment through radiation, convection, etc.
[C]By difference

3.3.11 Case R12A-S – Part Load Performance Results

Plant performance results are summarized at each discrete load point in Exhibit 3-37. Exhibit 3-38 displays a detailed breakdown of the auxiliary power requirement at each discrete load point. Air emissions at each discrete load point are summarized in Exhibit 3-39. The results presented in this section are reflective of steady-state operation. Performance associated with specific operating profiles (e.g., load-following, peaking) will differ.

Exhibit 3-37. Case R12A-S part load plant performance summary

Performance Summary					
Percent Load	**100%**	**75%**	**50%**	**25%**	**10%**
Reciprocating Engine Power, MWe	113	84	56	28	11
Steam Turbine Power, MWe	–	–	–	–	–
Total Gross Power, MWe	**113**	**84**	**56**	**28**	**11**
Nameplate Capacity, MWe	**113**	**113**	**113**	**113**	**113**
Total Auxiliaries, MWe	**1**	**1**	**1**	**0**	**0**
Total Auxiliaries, % of Gross Power	**1.3%**	**1.4%**	**1.5%**	**1.6%**	**2.6%**
Net Power, MWe	**111**	**83**	**55**	**28**	**11**
HHV Net Plant Efficiency, %	41.0%	38.8%	36.6%	31.6%	20.8%
HHV Net Plant Heat Rate, kJ/kWh (Btu/kWh)	8,777 (8,319)	9,290 (8,805)	9,835 (9,321)	11,382 (10,788)	17,293 (16,391)
HHV Reciprocating Engine Efficiency, %	41.6%	39.3%	37.2%	32.2%	21.4%
LHV Net Plant Efficiency, %	45.4%	42.9%	40.6%	35.0%	23.1%
LHV Net Plant Heat Rate, kJ/kWh (Btu/kWh)	7,922 (7,509)	8,385 (7,948)	8,877 (8,414)	10,273 (9,737)	15,609 (14,794)
LHV Reciprocating Engine Efficiency, %	46.1%	43.5%	41.2%	35.6%	23.7%
Steam Turbine Cycle Efficiency, %	–	–	–	–	–
Steam Turbine Heat Rate, kJ/kWh (Btu/kWh)	–	–	–	–	–
Condenser Duty, GJ/hr (MMBtu/hr)	–	–	–	–	–
Natural Gas Feed Flow, kg/hr (lb/hr)	18,632 (41,077)	14,787 (32,600)	10,430 (22,995)	6,015 (13,261)	3,641 (8,028)
HHV Thermal Input, kWt	270,659	214,800	151,512	87,380	52,895
LHV Thermal Input, kWt	244,296	193,878	136,755	78,869	47,743
Raw Water Withdrawal, (m^3/min)/MWnet (gpm/MWnet)	–	–	–	–	–
Raw Water Consumption, (m^3/min)/MWnet (gpm/MWnet)	–	–	–	–	–

Exhibit 3-38. Case R12A-S part load plant power summary

Power Summary					
Percent Load	**100%**	**75%**	**50%**	**25%**	**10%**
Reciprocating Engine Power, MWe	113	84	56	28	11
Steam Turbine Power, MWe	–	–	–	–	–
Total Gross Power, MWe	**113**	**84**	**56**	**28**	**11**
Nameplate Capacity, MWe	**113**	**113**	**113**	**113**	**113**
Auxiliary Load Summary					
Air Cooled Condenser Fans	–	–	–	–	–
Ancillary Glycol Cooling Loops, kWe	674	512	362	151	89
Attemperating Air Fan, kWe	–	–	–	–	–
Reciprocating Engine Auxiliaries, kWe	225	169	113	56	23
Combustion Turbine Water Injection Pump, kWe	–	–	–	–	–
Condensate Pumps, kWe	–	–	–	–	–
Feedwater Pumps, kWe	–	–	–	–	–
Ground Water Pumps, kWe	–	–	–	–	–
Miscellaneous Balance of Plant,[A] kWe	246	218	190	162	145
Natural Gas Compression, kWe	–	–	–	–	–
SCR, kWe	5	5	4	2	2
Steam Turbine Auxiliaries, kWe	–	–	–	–	–
Transformer Losses, kWe	340	260	170	90	30
Total Auxiliaries, MWe	**1**	**1**	**1**	**0**	**0**
Net Power, MWe	**111**	**83**	**55**	**28**	**11**

[A]Includes plant control systems, lighting, HVAC, and miscellaneous low voltage loads

Exhibit 3-39. Case R12A-S part load air emissions summary

Emissions Summary					
Percent Load	**100%**	**75%**	**50%**	**25%**	**10%**
SO_2, kg/MWh-gross (lb/MWh-gross)	0.004 (0.008)	0.004 (0.008)	0.004 (0.009)	0.005 (0.010)	0.007 (0.015)
NOx, kg/MWh-gross (lb/MWh-gross)	0.043 (0.095)	0.046 (0.101)	0.048 (0.106)	0.055 (0.121)	0.080 (0.177)
Particulate, kg/MWh-gross (lb/MWh-gross)	0.078 (0.172)	0.082 (0.181)	0.130 (0.286)	0.170 (0.376)	0.275 (0.606)
Hg, kg/MWh-gross (lb/MWh-gross)	0.000 (0.000)	0.000 (0.000)	0.000 (0.000)	0.000 (0.000)	0.000 (0.000)
VOC, kg/MWh-gross (lb/MWh-gross)	0.120 (0.265)	0.127 (0.280)	0.134 (0.295)	0.152 (0.335)	0.223 (0.493)
CO, kg/MWh-gross (lb/MWh-gross)	0.129 (0.285)	0.136 (0.301)	0.144 (0.317)	0.163 (0.360)	0.240 (0.529)
CO_2, kg/MWh-gross (lb/MWh-gross)	433 (954)	457 (1,008)	481 (1,062)	546 (1,205)	800 (1,765)
CO_2, kg/MWh-net (lb/MWh-net)	439 (967)	464 (1,022)	489 (1,078)	556 (1,225)	821 (1,811)

All emissions are maintained at or below the environmental target emission limits across the entire load range.

Exhibit 3-40 displays the Case R12A-S itemized efficiencies (HHV net plant efficiency and HHV engine efficiency) and normalized auxiliary power consumption across the load range.

Exhibit 3-40. Case R12A-S part load itemized efficiencies

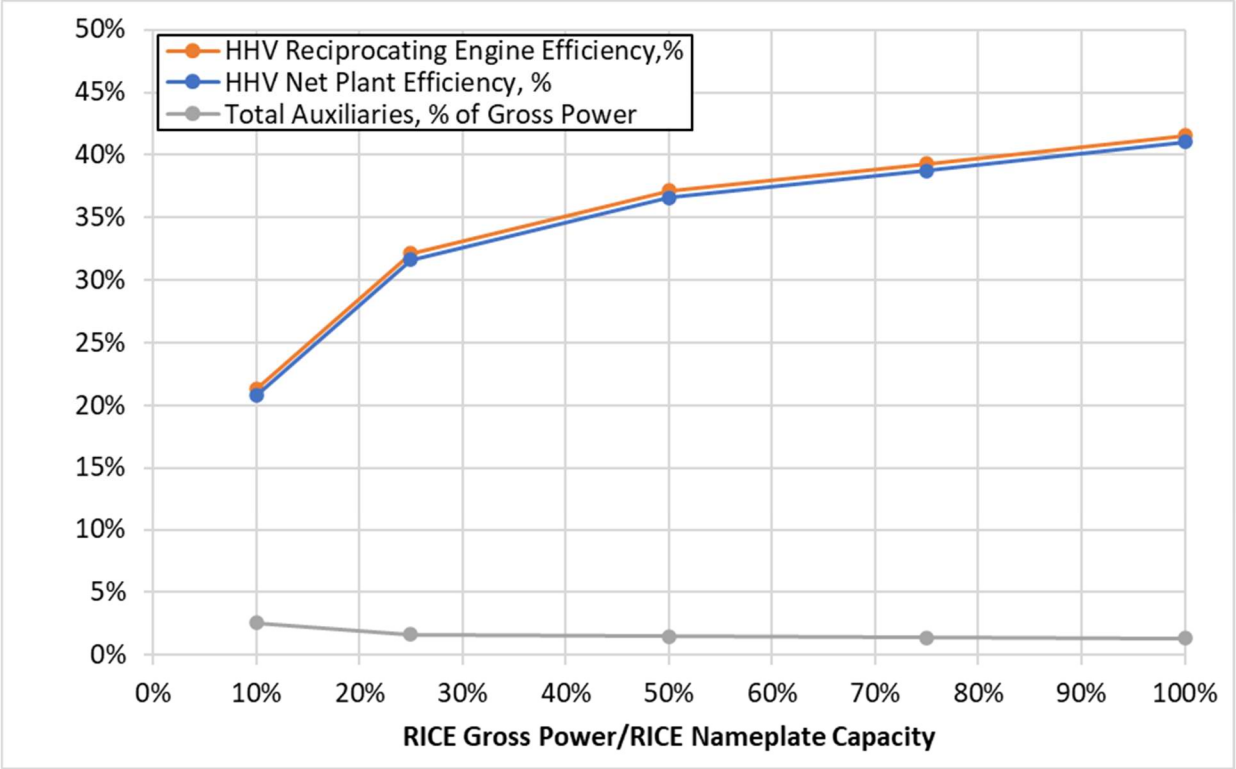

The decrease in part load net plant efficiency is primarily attributable to two key factors: 1) a decrease in the part load reciprocating engine efficiency, and 2) an increase in the normalized auxiliary power consumption.

The decrease in the part load reciprocating engine efficiency is an expected occurrence. To improve efficiency and emissions, at loads below 20 percent, the engines run in skip firing mode, where there is no combustion in some of the cylinders.

3.3.12 Case R12A-E – Part Load Performance Results

Plant performance results are summarized at each discrete load point in Exhibit 3-41. Exhibit 3-42 displays a detailed breakdown of the auxiliary power requirement at each discrete load point. Air emissions at each discrete load point are summarized in Exhibit 3-43. The results presented in this section are reflective of steady-state operation. Performance associated with specific operating profiles (e.g., load-following, peaking) will differ.

Exhibit 3-41. Case R12A-E part load plant performance summary

Performance Summary									
Percent Load	**100%**	**75%**	**50%**	**25%**	**8%**	**6%**	**4%**	**2%**	**1%**
Reciprocating Engine Power, MWe	113	84	56	28	9	7	5	2	1
Steam Turbine Power, MWe	–	–	–	–	–	–	–	–	–
Total Gross Power, MWe	**113**	**84**	**56**	**28**	**9**	**7**	**5**	**2**	**1**
Nameplate Capacity, MWe	**113**	**113**	**113**	**113**	**113**	**113**	**113**	**113**	**113**
Total Auxiliaries, MWe	**1**	**1**	**1**	**0**	**0**	**0**	**0**	**0**	**0**
Total Auxiliaries, % of Gross Power	**1.3%**	**1.4%**	**1.4%**	**1.7%**	**2.6%**	**3.1%**	**4.1%**	**6.9%**	**15.6%**
Net Power, MWe	**111**	**83**	**55**	**28**	**9**	**7**	**4**	**2**	**1**
HHV Net Plant Efficiency, %	41.0%	41.0%	41.0%	40.9%	40.5%	38.1%	35.6%	29.9%	18.0%
HHV Net Plant Heat Rate, kJ/kWh (Btu/kWh)	8,777 (8,319)	8,781 (8,323)	8,788 (8,329)	8,809 (8,350)	8,895 (8,431)	9,458 (8,964)	10,103 (9,576)	12,023 (11,395)	19,966 (18,924)
HHV Reciprocating Engine Efficiency, %	41.6%	41.6%	41.6%	41.6%	41.6%	39.3%	37.2%	32.2%	21.4%
LHV Net Plant Efficiency, %	45.4%	45.4%	45.4%	45.3%	44.8%	42.2%	39.5%	33.2%	20.0%
LHV Net Plant Heat Rate, kJ/kWh (Btu/kWh)	7,922 (7,509)	7,926 (7,512)	7,932 (7,518)	7,951 (7,536)	8,029 (7,610)	8,536 (8,091)	9,119 (8,643)	10,852 (10,285)	18,021 (17,081)
LHV Reciprocating Engine Efficiency, %	46.1%	46.1%	46.1%	46.1%	46.1%	43.5%	41.2%	35.6%	23.7%
Steam Turbine Cycle Efficiency, %	–	–	–	–	–	–	–	–	–
Steam Turbine Heat Rate, kJ/kWh (Btu/kWh)	–	–	–	–	–	–	–	–	–
Condenser Duty, GJ/hr (MMBtu/hr)	–	–	–	–	–	–	–	–	–
Natural Gas Feed Flow, kg/hr (lb/hr)	18,632 (41,077)	13,974 (30,808)	9,316 (20,539)	4,658 (10,269)	1,553 (3,423)	1,232 (2,717)	869 (1,916)	501 (1,105)	303 (669)
HHV Thermal Input, kWt	270,659	202,994	135,329	67,665	22,555	17,900	12,626	7,282	4,408
LHV Thermal Input, kWt	244,296	183,222	122,148	61,074	20,358	16,156	11,396	6,572	3,979
Raw Water Withdrawal, (m^3/min)/MWnet (gpm/MWnet)	–	–	–	–	–	–	–	–	–
Raw Water Consumption, (m^3/min)/MWnet (gpm/MWnet)	–	–	–	–	–	–	–	–	–

Exhibit 3-42. Case R12A-E part load plant power summary

Power Summary									
Percent Load	**100%**	**75%**	**50%**	**25%**	**8%**	**6%**	**4%**	**2%**	**1%**
Reciprocating Engine Power, MWe	113	84	56	28	9	7	5	2	1
Steam Turbine Power, MWe	–	–	–	–	–	–	–	–	–
Total Gross Power, MWe	**113**	**84**	**56**	**28**	**9**	**7**	**5**	**2**	**1**
Nameplate Capacity, MWe	**113**	**113**	**113**	**113**	**113**	**113**	**113**	**113**	**113**
Auxiliary Load Summary									
Air Cooled Condenser Fans	–	–	–	–	–	–	–	–	–
Ancillary Glycol Cooling Loops, kWe	674	505	337	168	56	43	30	13	7
Attemperating Air Fan, kWe	–	–	–	–	–	–	–	–	–
Reciprocating Engine Auxiliaries, kWe	225	169	112	56	19	14	9	5	2
Combustion Turbine Water Injection Pump, kWe	–	–	–	–	–	–	–	–	–
Condensate Pumps, kWe	–	–	–	–	–	–	–	–	–
Feedwater Pumps, kWe	–	–	–	–	–	–	–	–	–
Ground Water Pumps, kWe	–	–	–	–	–	–	–	–	–
Miscellaneous Balance of Plant,[A] kWe	246	218	190	162	143	141	139	136	135
Natural Gas Compression, kWe	–	–	–	–	–	–	–	–	–
SCR, kWe	5	4	3	1	0	0	0	0	0
Steam Turbine Auxiliaries, kWe	–	–	–	–	–	–	–	–	–
Transformer Losses, kWe	340	255	170	85	28	22	14	8	3
Total Auxiliaries, MWe	**1**	**1**	**1**	**0**	**0**	**0**	**0**	**0**	**0**
Net Power, MWe	**111**	**83**	**55**	**28**	**9**	**7**	**4**	**2**	**1**

[A]Includes plant control systems, lighting, HVAC, and miscellaneous low voltage loads

Exhibit 3-43. Case R12A-E part load air emissions summary

Emissions Summary									
Percent Load	**100%**	**75%**	**50%**	**25%**	**8%**	**6%**	**4%**	**2%**	**1%**
SO_2, kg/MWh-gross (lb/MWh-gross)	0.004 (0.008)	0.004 (0.008)	0.004 (0.008)	0.004 (0.008)	0.004 (0.008)	0.004 (0.008)	0.004 (0.009)	0.005 (0.010)	0.007 (0.015)
NOx, kg/MWh-gross (lb/MWh-gross)	0.043 (0.095)	0.043 (0.095)	0.043 (0.095)	0.043 (0.095)	0.043 (0.095)	0.046 (0.101)	0.048 (0.106)	0.055 (0.121)	0.080 (0.177)
Particulate, kg/MWh-gross (lb/MWh-gross)	0.078 (0.172)	0.078 (0.172)	0.078 (0.172)	0.078 (0.172)	0.078 (0.172)	0.082 (0.181)	0.130 (0.286)	0.170 (0.376)	0.275 (0.606)
Hg, kg/MWh-gross (lb/MWh-gross)	0.00 (0.00)	0.000 (0.000)	0.000 (0.000)	0.000 (0.000)	0.000 (0.000)	0.000 (0.000)	0.000 (0.000)	0.000 (0.000)	0.000 (0.000)
VOC, kg/MWh-gross (lb/MWh-gross)	0.12 (0.265)	0.120 (0.265)	0.120 (0.265)	0.120 (0.265)	0.120 (0.265)	0.127 (0.280)	0.134 (0.295)	0.152 (0.335)	0.223 (0.493)
CO, kg/MWh-gross (lb/MWh-gross)	0.129 (0.285)	0.129 (0.285)	0.129 (0.285)	0.129 (0.285)	0.129 (0.285)	0.136 (0.301)	0.144 (0.317)	0.163 (0.360)	0.240 (0.529)
CO_2, kg/MWh-gross (lb/MWh-gross)	433 (954)	433 (954)	433 (954)	433 (954)	433 (954)	457 (1,008)	481 (1,062)	546 (1,205)	800 (1,765)
CO_2, kg/MWh-net (lb/MWh-net)	439 (967)	439 (967)	440 (968)	441 (971)	445 (980)	472 (1,040)	502 (1,107)	587 (1,294)	948 (2,091)

All emissions are maintained at or below the environmental target emission limits across the entire load range.

Exhibit 3-44 displays the Case R12A-E itemized efficiencies (HHV net plant efficiency and HHV engine efficiency) and normalized auxiliary power consumption across the load range.

Exhibit 3-44. Case R12A-E part load itemized efficiencies

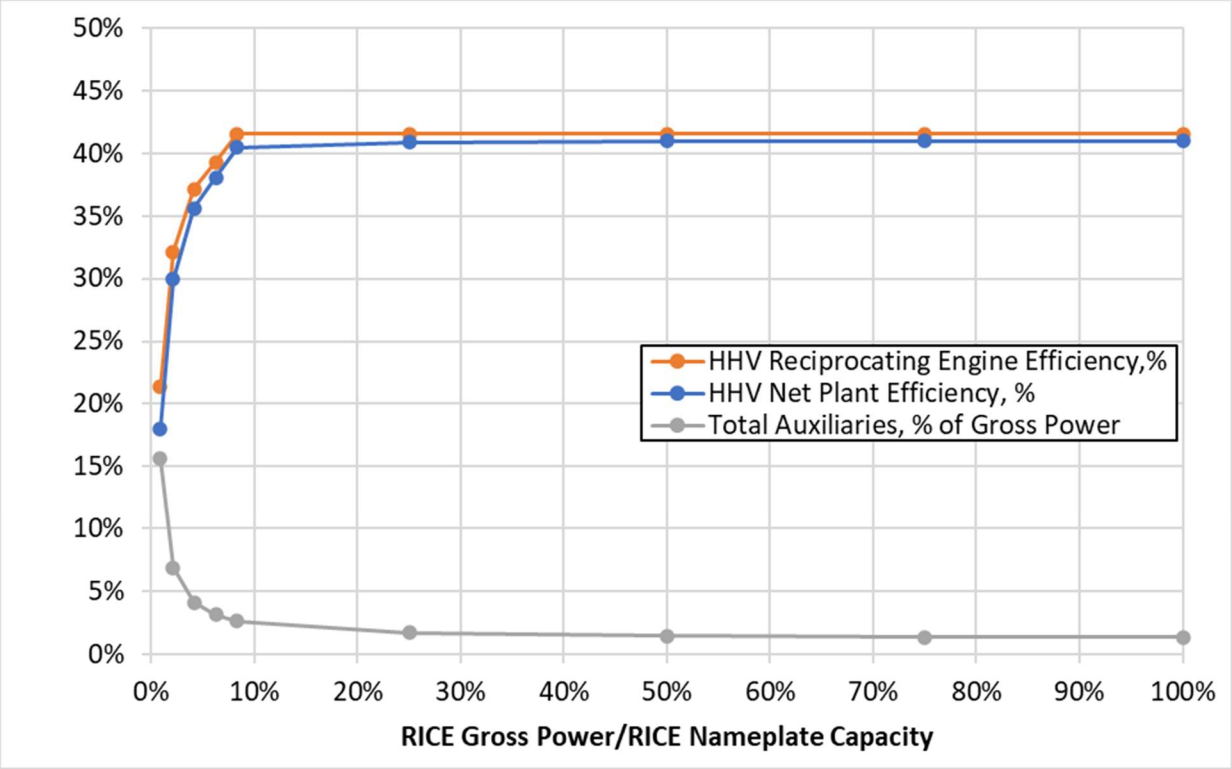

The decrease in part load net plant efficiency is primarily attributable to two key factors: 1) a decrease in the part load reciprocating engine efficiency, and 2) an increase in the normalized auxiliary power consumption. The decrease in the part load reciprocating engine efficiency is an expected occurrence.

To improve efficiency and emissions at loads below 20 percent (individual unit), the engines run in skip firing mode, where there is no combustion in some of the cylinders.

3.3.13 Case R12A-S – Major Equipment List

Case R12A-S – Account 3: Feedwater and Miscellaneous Balance of Plant Systems

Equipment No.	Description	Type	Design Condition	Operating Qty.	Spares
1	Service Air Compressors	Flooded screw	13 m^3/min @ 0.7 MPa (450 scfm @ 100 psig)	2	1
2	Instrument Air Dryers	Duplex, regenerative	13 m^3/min (450 scfm)	2	1
3	Engine-Driven Fire Pump	Vertical turbine, diesel engine	3,785 lpm @ 110 m H_2O (1,000 gpm @ 350 ft H_2O)	1	1

Equipment No.	Description	Type	Design Condition	Operating Qty.	Spares
4	Fire Service Booster Pump	Two-stage horizontal centrifugal	2,650 lpm @ 80 m H_2O (700 gpm @ 250 ft H_2O)	1	1
5	Liquid Waste Treatment System	–	10 years, 24-hour storm	1	0
6	Gas Pipeline	Underground, coated carbon steel, wrapped cathodic protection	17 m^3/min @ 2.8 MPa (589 acfm @ 400.3 psia) 39 cm (16 in) standard wall pipe	16 km (10 mile)	0
7	Gas Metering Station	–	17 m^3/min (589 acfm)	1	0

Case R12A-S – Account 6: Reciprocating Internal Combustion Engine and Accessories

Equipment No.	Description	Type	Design Condition	Operating Qty.	Spares
1	Reciprocating Internal Combustion Engine Generator Package	Spark ignited	10 MW Generator: 10 MVA @ 0.85 p.f., 18 kV, 60 Hz, 3-phase	12	0

Case R12A-S – Account 7: Ductwork, and Stack

Equipment No.	Description	Type	Design Condition	Operating Qty.	Spares
1	Stack	CS plate, type 409SS liner	15 m (50 ft) high x 1.3 m (4 ft) diameter	12	0
2	CO Catalyst	–	60,000 kg/hr (130,000 lb/hr)	12	0
3	SCR Reactor	–	60,000 kg/hr (130,000 lb/hr)	12	0
4	SCR Catalyst	–	Space available for an additional catalyst layer	1 layer	0
5	Dilution Air Blowers	Centrifugal	2 m^3/min @ 108 cm WG (90 scfm @ 42 in WG)	12	1
6	Ammonia Feed Pump	Centrifugal	0.5 lpm @ 90 m H_2O (0.1 gpm @ 300 ft H_2O)	12	1
7	Ammonia Storage Tank	Horizontal tank	88,000 liter (23,000 gal)	1	0

Case R12A-S – Account 9: Cooling System

Equipment No.	Description	Type	Design Condition	Operating Qty.	Spares
1	Glycol Cooling Loops	Industrial grade, air to glycol, closed loop heat exchanger	40 GJ/hr (38 MMBtu/hr) heat duty	5	0

Case R12A-S – Account 11: Accessory Electric Plant

Equipment No.	Description	Type	Design Condition	Operating Qty.	Spares
1	CG Transformer	Oil-filled	18 kV/345 kV, 10 MVA, 3-ph, 60 Hz	12	0
2	Medium Voltage Transformer	Oil-filled	18 kV/4.16 kV, 1 MVA, 3-ph, 60 Hz	1	1
3	Low Voltage Transformer	Dry ventilated	4.16 kV/480 V, 0 MVA, 3-ph, 60 Hz	1	1
4	CG Isolated Phase Bus Duct and Tap Bus	Aluminum, self-cooled	18 kV, 3-ph, 60 Hz	12	0
5	Medium Voltage Switchgear	Metal clad	4.16 kV, 3-ph, 60 Hz	1	1
6	Low Voltage Switchgear	Metal enclosed	480 V, 3-ph, 60 Hz	1	1

Equipment No.	Description	Type	Design Condition	Operating Qty.	Spares
7	Emergency Diesel Generator	Sized for emergency shutdown	750 kW, 480 V, 3-ph, 60 Hz	1	0

Case R12A-S – Account 12: Instrumentation and Control

Equipment No.	Description	Type	Design Condition	Operating Qty.	Spares
1	DCS - Main Control	Monitor/keyboard; Operator printer (laser color); Engineering printer (laser B&W)	Operator stations/printers and engineering stations/printers	1	0
2	DCS - Processor	Microprocessor with redundant input/output	N/A	1	0
3	DCS - Data Highway	Fiber optic	Fully redundant, 25% spare	1	0

3.3.14 Case R12A-S – Cost Estimating

The cost estimating method was described previously in Section 2.8. Exhibit 3-45 shows a detailed breakdown of the capital costs; Exhibit 3-46 shows the owner's costs, along with the TOC; Exhibit 3-47 shows the initial and annual O&M costs; and Exhibit 3-48 and Exhibit 3-49 show the startup and shutdown costs.

The estimated TPC of Case R12A-S is $136 million. The project contingency is 13.9 percent of the TPC.

Exhibit 3-45. Case R12A-S total plant cost details

Case:		R12A-S	– Small RICE (12x)				Estimate Type:			Conceptual
							Cost Base:			Dec 2018
Item No.	Description	Equipment Cost	Material Cost	Labor		Bare Erected Cost	Eng'g CM H.O.& Fee	Contingencies		Total Plant Cost
				Direct	Indirect			Process	Project	$/1,000
3		Feedwater & Miscellaneous BOP Systems								
3.4	Service Water Systems	$299	$571	$1,850	$0	$2,720	$544	$0	$653	$3,917
3.6	Natural Gas Pipeline and Start-Up System	$3,128	$135	$101	$0	$3,363	$673	$0	$605	$4,641
3.9	Miscellaneous Plant Equipment	$4,815	$631	$2,447	$0	$7,893	$1,579	$0	$1,894	$11,367
	SUBTOTAL 3	**$8,242**	**$1,337**	**$4,397**	**$0**	**$13,976**	**$2,795**	**$0**	**$3,153**	**$19,924**
6		Reciprocating Internal Combustion Engine & Accessories								
6.1	RICE Generator	$48,082	$0	$2,926	$0	$51,008	$10,202	$0	$9,182	$70,392
6.3	RICE Accessories	$900	$0	$55	$0	$954	$191	$0	$172	$1,317
6.5	RICE Foundations	$0	$329	$356	$0	$685	$137	$0	$164	$987
	SUBTOTAL 6	**$48,982**	**$329**	**$3,337**	**$0**	**$52,648**	**$10,530**	**$0**	**$9,518**	**$72,695**
7		Ductwork & Stack								
7.3	Ductwork	$0	$435	$302	$0	$737	$147	$0	$133	$1,017
7.4	Stack	$1,929	$0	$357	$0	$2,286	$457	$0	$411	$3,154
7.5	Ductwork & Stack Foundations	$0	$324	$304	$0	$629	$126	$0	$151	$905
7.6	Selective Catalytic Reduction System	$625	$263	$366	$0	$1,254	$251	$0	$226	$1,731
7.7	Carbon Monoxide Reduction System	$0	$81	$54	$0	$136	$27	$0	$24	$187
	SUBTOTAL 7	**$2,554**	**$1,103**	**$1,384**	**$0**	**$5,041**	**$1,008**	**$0**	**$945**	**$6,995**
9		Cooling Water System								
9.6	Component Cooling Water System[A]	$1,146	$0	$880	$0	$2,026	$405	$0	$365	$2,796
	SUBTOTAL 9	**$1,146**	**$0**	**$880**	**$0**	**$2,026**	**$405**	**$0**	**$365**	**$2,796**
11		Accessory Electric Plant								
11.1	Generator Equipment	$849	$0	$640	$0	$1,489	$298	$0	$268	$2,054
11.2	Station Service Equipment	$716	$0	$61	$0	$778	$156	$0	$140	$1,073
11.3	Switchgear & Motor Control	$1,023	$0	$177	$0	$1,200	$240	$0	$216	$1,656
11.4	Conduit & Cable Tray	$0	$247	$712	$0	$959	$192	$0	$173	$1,324
11.5	Wire & Cable	$0	$369	$659	$0	$1,028	$206	$0	$185	$1,419
11.6	Protective Equipment	$24	$0	$84	$0	$108	$22	$0	$19	$149
11.7	Standby Equipment	$264	$0	$244	$0	$507	$101	$0	$91	$700
11.8	Main Power Transformers	$1,912	$0	$39	$0	$1,951	$390	$0	$351	$2,692
11.9	Electrical Foundations	$0	$25	$64	$0	$89	$18	$0	$21	$128
	SUBTOTAL 11	**$4,787**	**$641**	**$2,681**	**$0**	**$8,109**	**$1,622**	**$0**	**$1,465**	**$11,195**
12		Instrumentation & Control								
12.1	RICE Control Equipment	$57	$0	$36	$0	$94	$19	$0	$17	$129
12.2	RICE Control Equipment	$110	$0	$70	$0	$179	$36	$0	$32	$248
12.4	Other Major Component Control Equipment	$154	$0	$98	$0	$251	$50	$0	$45	$347
12.5	Signal Processing Equipment	$128	$0	$4	$0	$132	$26	$0	$24	$182

Case:		R12A-S	– Small RICE (12x)				Estimate Type:			Conceptual
							Cost Base:			Dec 2018
Item No.	Description	Equipment Cost	Material Cost	Labor		Bare Erected Cost	Eng'g CM H.O.& Fee	Contingencies		Total Plant Cost
				Direct	Indirect			Process	Project	$/1,000
12.6	Control Boards, Panels & Racks	$34	$0	$21	$0	$55	$11	$0	$10	$75
12.7	Distributed Control System Equipment	$1,882	$0	$57	$0	$1,940	$388	$0	$349	$2,677
12.8	Instrument Wiring & Tubing	$155	$124	$497	$0	$777	$155	$0	$140	$1,072
12.9	Other Instrumentation & Controls Equipment	$108	$0	$249	$0	$357	$71	$0	$64	$493
	SUBTOTAL 12	**$2,628**	**$124**	**$1,032**	**$0**	**$3,785**	**$757**	**$0**	**$681**	**$5,223**
	13	**Improvements to Site**								
13.1	Site Preparation	$0	$278	$5,896	$0	$6,173	$1,235	$0	$1,482	$8,890
13.2	Site Improvements	$0	$893	$1,180	$0	$2,073	$415	$0	$498	$2,986
13.3	Site Facilities	$857	$0	$899	$0	$1,756	$351	$0	$422	$2,529
	SUBTOTAL 13	**$857**	**$1,171**	**$7,975**	**$0**	**$10,003**	**$2,001**	**$0**	**$2,401**	**$14,405**
	14	**Buildings & Structures**								
14.1	RICE Area	$0	$161	$85	$0	$246	$49	$0	$44	$339
14.4	Administration Building	$0	$194	$131	$0	$325	$65	$0	$59	$449
14.7	Machine Shop	$0	$290	$185	$0	$475	$95	$0	$86	$656
14.8	Warehouse	$0	$226	$136	$0	$362	$72	$0	$65	$499
14.9	Other Buildings & Structures	$0	$165	$120	$0	$285	$57	$0	$51	$393
	SUBTOTAL 14	**$0**	**$1,035**	**$658**	**$0**	**$1,693**	**$339**	**$0**	**$305**	**$2,336**
	TOTAL	**$69,196**	**$5,742**	**$22,344**	**$0**	**$97,281**	**$19,456**	**$0**	**$18,832**	**$135,569**

[A] Component cooling water system consists of a closed loop system and glycol-to-air heat exchangers. The system utilizes a 45 percent solution of glycol and water

Exhibit 3-46. Case R12A-S owner's costs

Description	$/1,000
Pre-Production Costs	
6 Months All Labor	$1,466
1 Month Maintenance Materials	$152
1 Month Non-fuel Consumables	$80
1 Month Waste Disposal	$0
25% of 1 Months Fuel Cost at 100% CF	$745
2% of TPC	$2,711
Total	**$5,154**
Inventory Capital	
60-day supply of consumables at 100% CF	$160
0.5% of TPC (spare parts)	$678
Total	**$838**
Other Costs	
Initial Cost for Catalyst and Chemicals	$381
Land	$60
Other Owner's Costs	$20,335
Financing Costs	$3,660
Total Overnight Costs (TOC)	**$165,998**

Exhibit 3-47. Case R12A-S initial and annual operating and maintenance costs

Case:	R12A-S	– Small RICE (12x)		Cost Base:	Dec 2018
Plant Size (MW, gross):	111	Heat Rate-net (Btu/kWh):		8,319	
Operating & Maintenance Labor					
Operating Labor			**Operating Labor Requirements per Shift**		
Operating Labor Rate (base):	38.50	$/hour	Skilled Operator:	1.0	
Operating Labor Burden:	30.00	% of base	Operator:	0.0	
Labor O-H Charge Rate:	25.00	% of labor	Foreman:	1.0	
			Lab Techs, etc.:	1.0	
			Total:	**3.0**	

Fixed Operating Costs	
	Annual Cost ($)
Annual Operating Labor:	$1,315,314
Maintenance Labor:	$1,030,326
Administrative & Support Labor:	$586,410
Property Taxes and Insurance:	$2,711,385
Total:	**$5,643,435**

Variable Operating Costs					
					Annual Cost ($)
Maintenance Material:					$1,818,223 x CF
Consumables					
	Initial Fill	**Per Day**	**Per Unit**	**Initial Fill**	**Annual Cost ($)**
Ammonia (19 wt%, ton):	0	8.1	$300.00	$0	$882,629 x CF
SCR Catalyst (ft^3):	930	0.51	$150.00	$139,464	$27,893 x CF
CO Catalyst (ft^3):	60	0.03	$4,000.00	$241,618	$48,324 x CF
Subtotal:				**$381,082**	**$958,846 x CF**
Waste Disposal					
SCR Catalyst (ft^3):	0	0.51	$2.50	$0	$465 x CF
CO Catalyst (ft^3):	0	0.03	$2.50	$0	$30 x CF
Subtotal:				**$0**	**$495 x CF**
Variable Operating Costs Total:				**$381,082**	**$2,777,564 x CF**

Fuel Cost					
Natural Gas (MMBtu):	0	22,165	$4.42	$0	$35,758,156 x CF
Fuel Costs Total:				**$0**	**$35,758,156 x CF**

Exhibit 3-48. Case R12A-S synchronization startup and shutdown costs

Event to Synchronization		Fast Start	Normal Start	Shutdown
Energy and Duration				
Energy Produced	MWh	-	-	-
Duration	min	2	2	1
NG Heat Input (HHV)	MMBtu	15	19	9
House Energy Consumed	MWh	0.0	0.0	0.0
Aux Boiler Heat Input (HHV)	MMBtu	-	-	-
Costs				
Energy Sold Cost	$	-	-	-
Variable O&M Cost	$	5	5	5
Natural Gas Cost	$	65	85	40
House Energy Cost	$	-	-	-
Total Cost for Event	**$**	**70**	**90**	**45**

Exhibit 3-49. Case R12A-S full load startup and shutdown costs

Event to Full Load		Fast Start	Normal Start	Shutdown
Energy and Duration				
Energy Produced	MWh	3.6	7.2	0.7
Duration	min	5	10	1
NG Heat Input (HHV)	MMBtu	51	96	12
House Energy Consumed	MWh	0.1	0.2	0.0
Aux Boiler Heat Input (HHV)	MMBtu	-	-	-
Costs				
Energy Sold Cost	$	(215)	(430)	(45)
Variable O&M Cost	$	15	30	5
Natural Gas Cost	$	225	425	55
House Energy Cost	$	5	10	-
Total Cost for Event	**$**	**30**	**35**	**15**

3.3.15 Spinning versus Efficiency mode for RICE Cases

The difference between the spinning mode (cases R6A-S and R12A-S) and efficiency mode (R6A-E and R12A-E) is purely operational. In spinning mode, all units simultaneously respond to demand, whereas in efficiency mode each unit sequentially responds to demand with the

remaining units either operating at full-load or shut down. Units can easily switch between modes to allow for different types of flexibility.

This section illustrates the impact that operating RICE units in either efficiency or spinning mode have on net plant efficiency. A comparison of the impacts on flexibility metrics is provided in Section 3.6.2.

The performance of each individual unit is identical to that of the collection of units used in each case. However, due to static miscellaneous auxiliary loads that remain constant across all load points (e.g., lighting, HVAC, plant control systems), the HHV net plant efficiency is reduced as the number of operating units is reduced. This can be observed in Exhibit 3-50 by comparing the net plant efficiencies of cases R6A-E and R12A-E at loads below 20 percent to the net plant efficiencies of R6A-S and R12A-S. The overall net plant efficiency of cases R6A-E and R12A-E is the weighted average of the number of operating full load units and the remaining part-load unit.

Exhibit 3-50. Net plant efficiency comparison between spinning and efficiency mode RICE cases

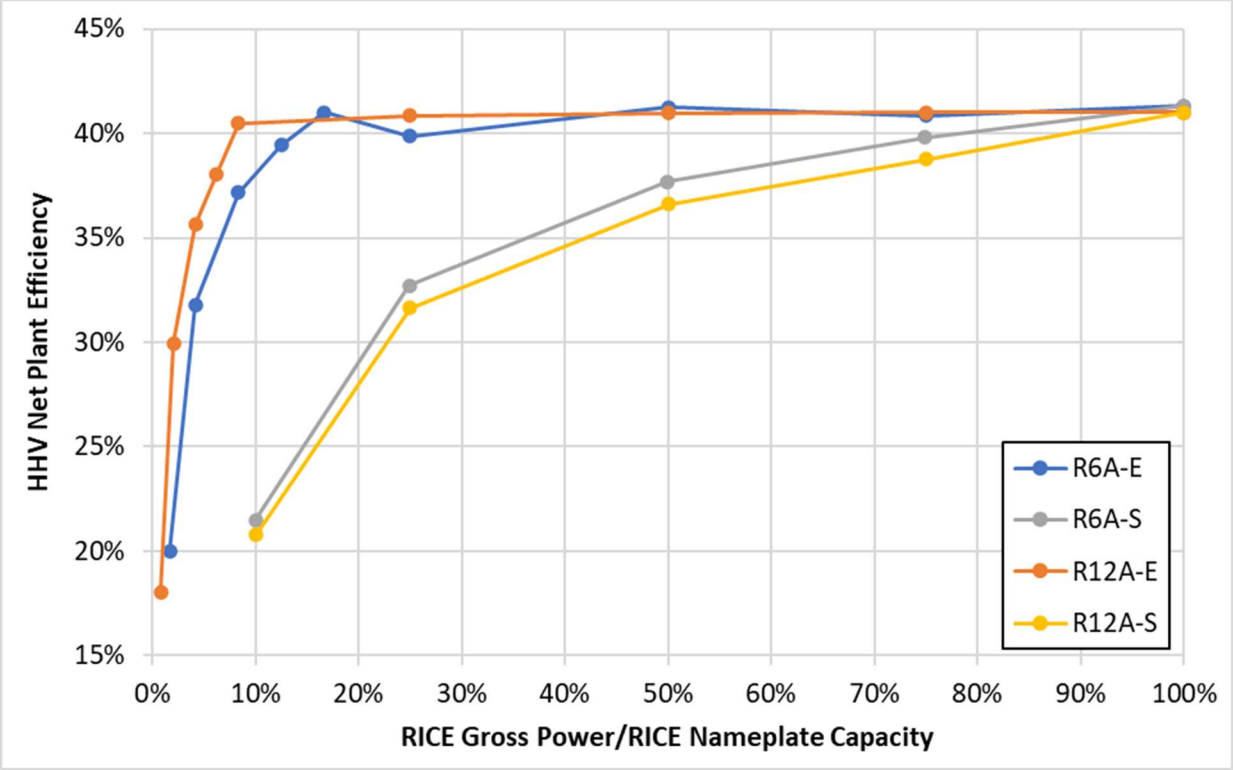

For Case R12A-E, all 12 units are operating at full-load at 100 percent capacity, the number of units is reduced at 75 percent, 50 percent, 25 percent, and 8 percent capacity, but each unit remains at full-load. Case R12A-E can achieve very low load (0.83 percent) by shutting off 11 of the 12 units and turning the remaining unit down to 10 percent load.

For Case R6A-E, all 6 units are operating at full-load at 100 percent capacity, the number of units is reduced at 75 percent, 50 percent, 25 percent, and 17 percent. Unlike Case R12A-E, the number of units is not evenly divisible at all the selected load-points. Therefore, the efficiency

reduction is more pronounced at 75 percent and 25 percent load than at 50 percent and 17 percent load, due to the part-load operation of one unit.

3.4 AERODERIVATIVE CASES

This section contains an evaluation of plant designs for cases SC1A and SC2A. The balance of this section is organized as follows:

- Key System Assumptions is a summary of study and modeling assumptions relevant to the aeroderivative cases.
- Sparing Philosophy is provided for the aeroderivative cases.
- Process and System Description provides an overview of the technology operation as applied to the aeroderivative cases. The systems that are common to all NG cases were covered in Section 3.2 and only features that are unique to the aeroderivative cases are discussed further in this section.
- Performance Results provides the main modeling results from the aeroderivative cases, including the full load performance summary, part load performance summary, environmental performance, carbon balance, water balance, energy and mass balance diagrams, and energy balance table.
- Equipment List provides an itemized list of major equipment for the aeroderivative cases with account codes that correspond to the cost accounts in the Cost Estimates section.
- Cost Estimates provides a summary of capital and operating costs for the aeroderivative cases.

3.4.1 Key System Assumptions, Aeroderivative

System assumptions for the aeroderivative cases are compiled in Exhibit 3-51.

Exhibit 3-51. Plant study configuration matrix, aeroderivative

	SC1A	SC2A
Steam Cycle, MPa/°C/°C (psig/°F/°F)	N/A	
Fuel	Natural Gas	
Fuel Pressure at Plant, MPa (psia)	3.4 (490)	
Condenser Pressure, mm Hg (in. Hg)	N/A	
Stack Temperature, °C (°F)	417 (782)	443 (830)
SO_2 Control	Low Sulfur Fuel	
NOx Control	DLN, SCR	
SCR Efficiency, %[A]	88.0	
Ammonia Slip (End of Catalyst Life), ppmv	10	
CO Catalyst Efficiency (CO), %[A]	94.7	78.6
CO Catalyst Efficiency (VOC), %[A]	0.0	33.4

[A]Removal efficiencies are based on the flue gas content

3.4.1.1 Balance of Plant, Aeroderivative

The BOP assumptions for the aeroderivative cases are presented in Exhibit 3-52.

Exhibit 3-52. BOP assumptions, Aeroderivative

Parameter	Value
Cooling System	Air-to-glycol
Fuel and Other Storage	
Natural Gas	Pipeline supply at 3.4 MPa (490 psia) and 27°C (80°F)
Plant Distribution Voltage	
Motors below 1 hp	110/220 V
Motors between 1 hp and 250 hp	480 V
Motors between 250 hp and 5,000 hp	4,160 V
Motors above 5,000 hp	13,800 V
CT Generators	18,000 V
Grid Interconnection Voltage	345 kV
Water and Wastewater	
Makeup Water	The water supply is 50 percent from a local POTW and 50 percent from groundwater and is assumed to be in sufficient quantities to meet plant makeup requirements. Makeup for potable, process, and DI water is drawn from municipal sources.
Process Wastewater	Storm water that contacts equipment surfaces is collected and treated for discharge through a permitted discharge.
Sanitary Waste Disposal	Design includes a packaged domestic sewage treatment plant with effluent discharged to the industrial wastewater treatment system. Sludge is hauled off site. Packaged plant is sized for 5.68 m^3/d (1,500 gpd).
Water Discharge	N/A

3.4.2 Sparing Philosophy, Aeroderivative

Single or dual trains are used to accommodate the size of commercial CTs. There is no redundancy other than normal sparing of rotating equipment. The plant design consists of the following major subsystems:

- SC1A
    - One state-of-the-art 2020 100 MW aeroderivative CTG (1 x 100 percent)
- SC2A

- Two state-of-the-art 2020 50 MW aeroderivative CTGs (2 x 50 percent)

3.4.3 Case SC1A – Process Description

In this section, the aeroderivative process is described. The system description follows the BFD in Exhibit 3-53 and stream numbers reference the same exhibit. Exhibit 3-54 provides process data for the numbered streams in the BFD. Full stream tables are only provided for the 100 percent load point.

Exhibit 3-53. Case SC1A BFD, aeroderivative

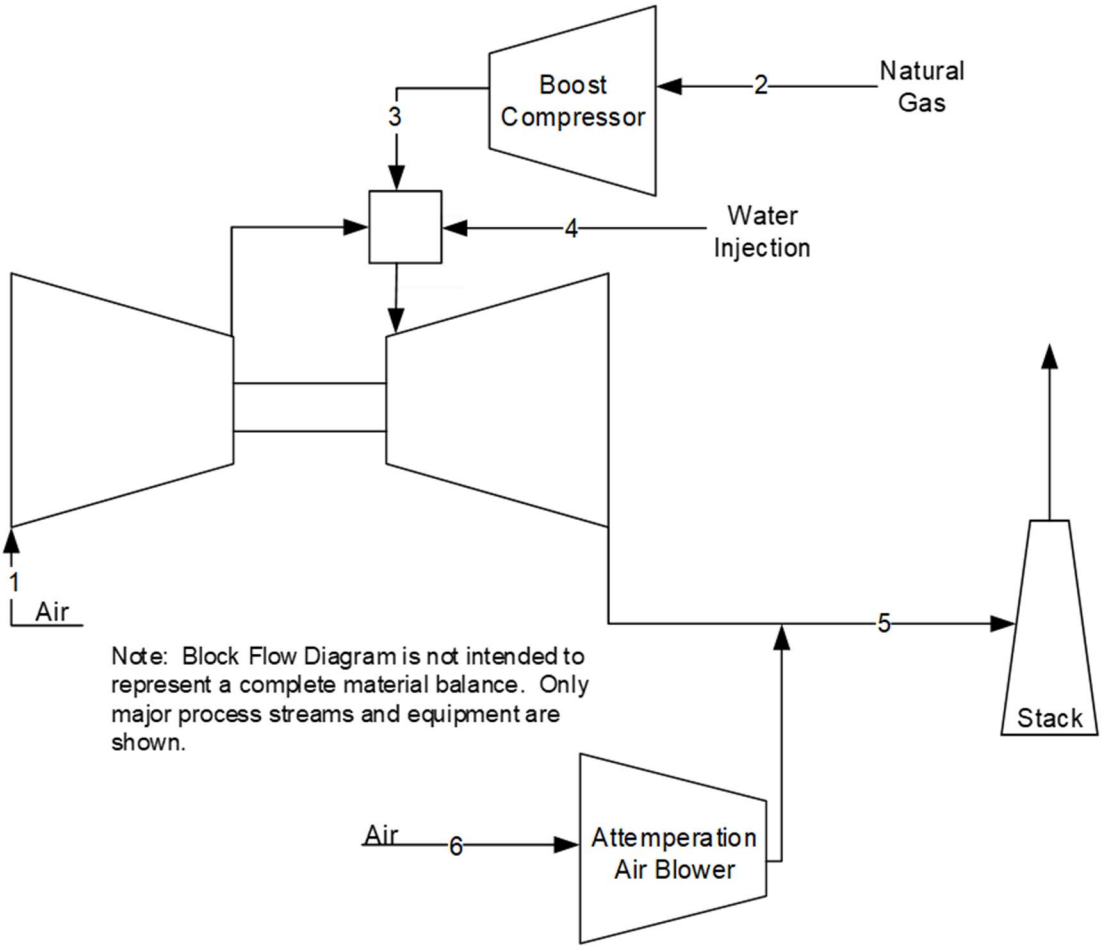

Ambient air (stream 1) is supplied to an inlet filter and compressed before being combined with natural gas (stream 2) in the aeroderivative CT. Water is injected to the CT to control NOx emissions. The flue gas exits the turbine and, if necessary, attemperation air (stream 5) is compressed and mixed with the exhaust gas to reduce the temperature to 443°C (830°F) for SCR operation before passing to the stack. At full load, no attemperation air is required.

Exhibit 3-54. Case SC1A stream table, aeroderivative

	1	2	3	4	5	6
V-L Mole Fraction						
Ar	0.0092	0.0000	0.0000	0.0000	0.0087	0.0092
CH_4	0.0000	0.9310	0.9310	0.0000	0.0000	0.0000
CH_4S	0.0000	0.0000	0.0000	0.0000	0.0000	0.0000
C_2H_6	0.0000	0.0320	0.0320	0.0000	0.0000	0.0000
C_3H_8	0.0000	0.0070	0.0070	0.0000	0.0000	0.0000
C_4H_{10}	0.0000	0.0040	0.0040	0.0000	0.0000	0.0000
CO_2	0.0003	0.0100	0.0100	0.0000	0.0409	0.0003
H_2O	0.0099	0.0000	0.0000	1.0000	0.1110	0.0099
N_2	0.7732	0.0160	0.0160	0.0000	0.7246	0.7732
O_2	0.2074	0.0000	0.0000	0.0000	0.1149	0.2074
SO_2	0.0000	0.0000	0.0000	0.0000	0.0000	0.0000
Total	1.0000	1.0000	1.0000	1.0000	1.0000	1.0000
V-L Flowrate, kg_{mol}/hr	28,011	1,166	1,166	705	29,915	0
V-L Flowrate, kg/hr	808,311	20,196	20,196	12,701	841,207	0
Solids Flowrate, kg/hr	0	0	0	0	0	0
Temperature, °C	15	27	93	15	417	15
Pressure, MPa, abs	0.10	3.38	5.83	0.10	0.10	0.10
Steam Table Enthalpy, kJ/kg[A]	30.23	17.30	156.18	63.01	635.75	30.23
AspenPlus Enthalpy, kJ/kg[B]	-97.58	-4,491.92	-4,353.05	-15,917.29	-1,095.29	-97.58
Density, kg/m^3	1.2	25.4	35.2	999.1	0.5	1.2
V-L Molecular, Weight	28.857	17.328	17.328	18.015	28.120	28.857
V-L Flowrate, lb_{mol}/hr	61,754	2,570	2,570	1,554	65,952	0
V-L Flowrate, lb/hr	1,782,020	44,524	44,524	28,000	1,854,544	0
Solids Flowrate, lb/hr	0	0	0	0	0	0
Temperature, °F	59	80	199	59	782	59
Pressure, psia	14.7	490.0	845.0	14.7	14.8	14.7
Steam Table Enthalpy, Btu/lb[A]	13.0	7.4	67.1	27.1	273.3	13.0
AspenPlus Enthalpy, Btu/lb[B]	-42.0	-1,931.2	-1,871.5	-6,843.2	-470.9	-42.0
Density, lb/ft^3	0.076	1.588	2.198	62.374	0.031	0.076

[A]Steam table reference conditions are 32.02°F & 0.089 psia

[B]Aspen thermodynamic reference state is the component's constituent elements in an ideal gas state at 25°C and 1 atm

3.4.4 Case SC1A – Full Load Performance Results

At full load, the plant produces a net output of 114 MW at a net plant efficiency of 38.8 percent (HHV basis). Full load performance for Case SC1A is summarized in Exhibit 3-55. Exhibit 3-56 presents a detailed breakdown of the auxiliary power requirements at full load.

Exhibit 3-55. Case SC1A plant performance summary

Performance Summary	
Combustion Turbine Power, MWe	116
Steam Turbine Power, MWe	–
Total Gross Power, MWe	**116**
Nameplate Capacity, MWe	**116**
Balance of Plant, kWe	2,714
Total Auxiliaries, MWe	**3**
Net Power, MWe	**114**
HHV Net Plant Efficiency, %	38.8%
HHV Net Plant Heat Rate, kJ/kWh (Btu/kWh)	9,290 (8,805)
HHV Combustion Turbine Efficiency, %	39.7%
LHV Net Plant Efficiency, %	42.9%
LHV Net Plant Heat Rate, kJ/kWh (Btu/kWh)	8,385 (7,948)
LHV Combustion Turbine Efficiency, %	43.96%
Steam Turbine Cycle Efficiency, %	–
Steam Turbine Heat Rate, kJ/kWh (Btu/kWh)	–
Condenser Duty, GJ/hr (MMBtu/hr)	–
Natural Gas Feed Flow, kg/hr (lb/hr)	20,196 (44,524)
HHV Thermal Input, kWt	293,370
LHV Thermal Input, kWt	264,796
Raw Water Withdrawal, $(m^3/min)/MW_{net}$ (gpm/MW_{net})	0.002 (0.5)
Raw Water Consumption, $(m^3/min)/MW_{net}$ (gpm/MW_{net})	0.002 (0.5)

Exhibit 3-56. Case SC1A plant power summary

Power Summary	
Combustion Turbine Power, MWe	116
Steam Turbine Power, MWe	–
Total Gross Power, MWe	**116**
Nameplate Total Capacity, MWe	**116**
Auxiliary Load Summary	
Air Cooled Condenser Fans	–
Ancillary Glycol Cooling Loops, kWe	425
Attemperating Air Fan, kWe	–
Combustion Turbine Auxiliaries, kWe	1,010
Combustion Turbine Water Injection Pump, kWe	30
Condensate Pumps, kWe	–
Feedwater Pumps, kWe	–
Ground Water Pumps, kWe	10
Miscellaneous Balance of Plant,[A] kWe	58
Natural Gas Compression, kWe	820
SCR, kWe	1
Steam Turbine Auxiliaries, kWe	–
Transformer Losses, kWe	360
Total Auxiliaries, MWe	**3**
Net Power, MWe	**114**

[A]Includes plant control systems, lighting, HVAC, and miscellaneous low voltage loads

3.4.4.1 Environmental Performance

The environmental targets for emissions of NOx, SO_2, and PM were presented in Section 2.3. A summary of the plant air emissions for Case SC1A is presented in Exhibit 3-57.

Exhibit 3-57. Case SC1A air emissions

	kg/GJ (lb/MMBtu)	tonne/year (ton/year)[A]	kg/MWh (lb/MWh)[B]
SO_2	0.000 (0.001)	4 (4)	0.004 (0.008)
NOx	0.003 (0.007)	28 (31)	0.028 (0.061)
Particulate	0.002 (0.005)	19 (21)	0.019 (0.041)
Hg	0.000 (0.000)	0 (0)	0.000 (0.000)
VOC	0.001 (0.003)	10 (11)	0.010 (0.022)
CO	0.005 (0.011)	44 (48)	0.043 (0.095)
CO_2	51 (119)	471,738 (520,002)	463 (1,020)
CO_2[C]	-	-	474 (1,044)

[A]Calculations based on a 100 percent capacity factor
[B]Emissions based on gross power except where otherwise noted
[C]CO_2 emissions based on net power instead of gross power

For the purpose of this report, the natural gas was assumed to contain the domestic average value of total sulfur of 0.34 gr/100 scf ($4.71x10^{-4}$ lb-S/MMBtu). [9] It was also assumed that the added CH_4S was the sole contributor of sulfur to the natural gas. No sulfur capture systems were required.

Uncontrolled NOx emissions from the CT is about 25 ppmvd at 15 percent O_2, which is achieved with a single annular combustor in the CTG. An SCR unit then further reduces the NOx concentration to 3 ppmvd at 15 percent O_2. [18] [24] [16]

The pipeline natural gas was assumed to contain no Hg or HCl, resulting in zero emissions.

The uncontrolled CO emissions from this aeroderivative CT are relatively high at 94 ppmvd at 15 percent O_2, whereas the VOC emissions are 2.9 ppmvd at 15 percent O_2. A CO catalyst is used to control the CO emissions to 5 ppmvd at 15 percent O_2 and the VOC emissions to 2 ppmvd at 15 percent O_2.

The production of PM is a result of system inefficiencies and is not produced or emitted in any significant amount.

CO_2 emissions represent the uncontrolled discharge from the process.

The carbon balance for the plant is shown in Exhibit 3-58. The carbon input to the plant consists of carbon in the natural gas and carbon in the air. Carbon leaves the plant as CO_2 through the stack.

Exhibit 3-58. Case SC1A carbon balance

Carbon In		Carbon Out	
	kg/hr (lb/hr)		kg/hr (lb/hr)
Natural Gas	14,587 (32,159)	Stack Gas	14,697 (32,401)
Air (CO_2)	110 (242)		
Total	**14,697 (32,401)**	**Total**	**14,697 (32,401)**

As shown in Exhibit 3-59, the sulfur content of the natural gas is insignificant. All sulfur in the natural gas is emitted in the stack gas.

Exhibit 3-59. Case SC1A sulfur balance

Sulfur In		Sulfur Out	
	kg/hr (lb/hr)		kg/hr (lb/hr)
Natural Gas	0.2 (0.5)	Stack Gas	0.2 (0.5)
Total	**0.2 (0.5)**	**Total**	**0.2 (0.5)**

Exhibit 3-60 shows the water balance for Case SC1A.

Exhibit 3-60. Case SC1A water balance

Water Use	Water Demand	Internal Recycle	Raw Water Withdrawal	Process Water Discharge	Raw Water Consumption
	m^3/min (gpm)	m^3/min (gpm)	m^3/min (gpm)	m^3/min (gpm)	m^3/min (gpm)
CT Injection	0.2 (56)	–	0.2 (56)	–	0.2 (56)
Total	0.2 (56)	–	0.2 (56)	–	0.2 (56)

3.4.4.2 Energy and Mass Balance Diagrams

An energy and mass balance diagram is shown for Case SC1A in Exhibit 3-61.

An overall plant energy balance is provided in tabular form in Exhibit 3-62. The power out is the CT power prior to generator losses. The power at the generator terminals (shown in Exhibit 3-55) is calculated by multiplying the power out by the full load generator efficiency (98.6 percent).

This page intentionally left blank

Exhibit 3-61. Case SC1A energy and mass balance, aeroderivative

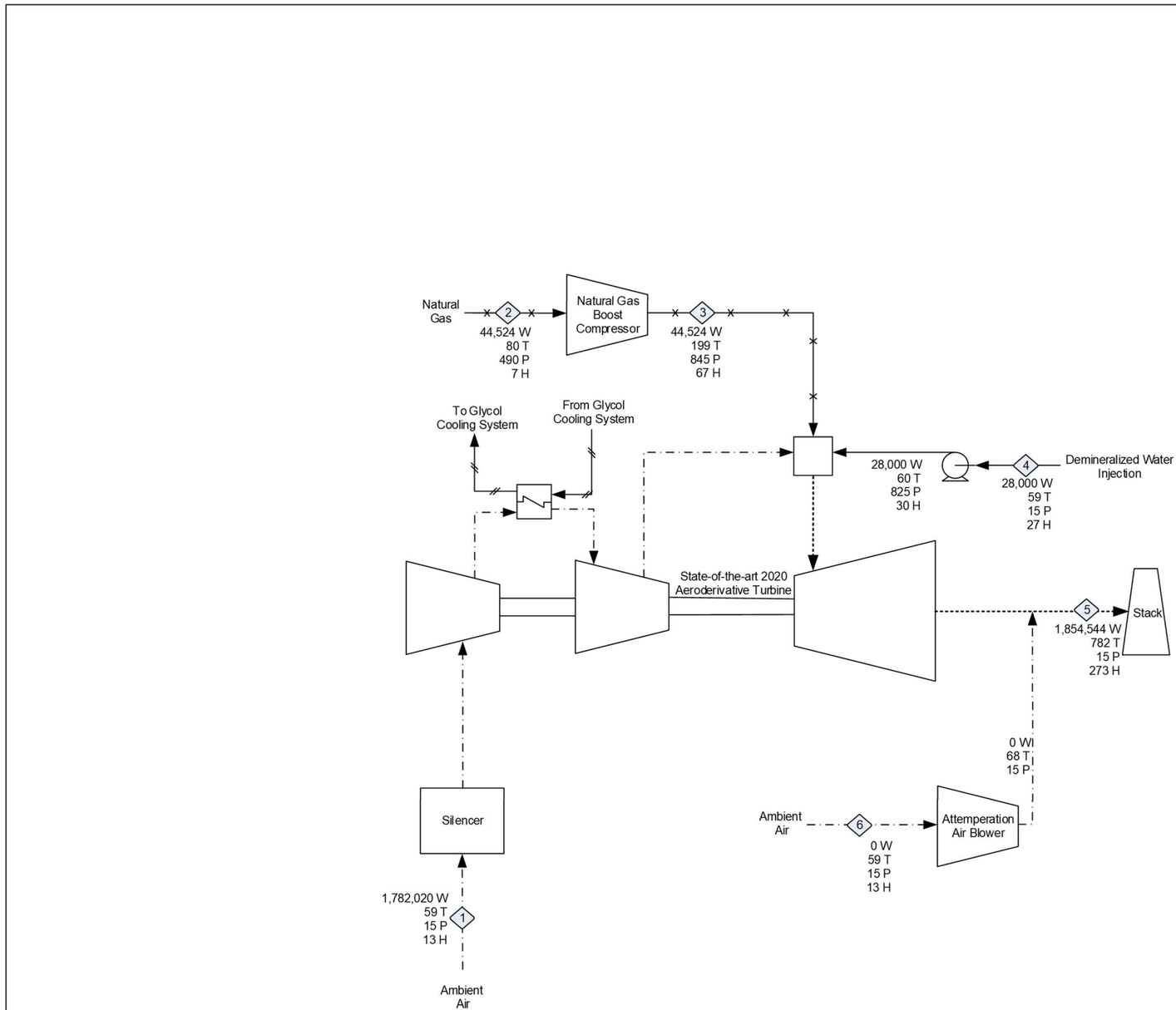

LEGEND

- Air
- Natural Gas
- Water
- Flue Gas
- Glycol

W	Flowrate, lbm/hr
T	Temperature, °F
P	Absolute Pressure, PSIA
H	Enthalpy, Btu/lbm
MWe	Power, Megawatts Electrical

Notes:
1. Enthalpy reference point is natural state at 32 °F and 0.08865 psia

PLANT PERFORMANCE SUMMARY

Gross Plant Power:	116 MWe
Auxiliary Load:	3 MWe
Net Plant Power:	114 MWe
Net Plant Efficiency, HHV:	38.8%
Net Plant Heat Rate, HHV:	8,805 Btu/kWh

NATIONAL ENERGY TECHNOLOGY LABORATORY

DOE/NETL

NGSC
CASE SC1A

ENERGY AND MASS BALANCE DIAGRAM

NATURAL GAS SIMPLE CYCLE PLANT
CASE SC1A
1 X STATE-OF-THE-ART 2020 AERODERIVATIVE CT

DWG. NO.	PAGES
FPB-EMB-CS-SC1A-PG-1	1 OF 1

This page intentionally left blank

Exhibit 3-62. Case SC1A overall energy balance (0°C [32°F] reference)

	HHV	Sensible + Latent	Power	Total
Heat In GJ/hr (MMBtu/hr)				
Natural Gas	1,056 (1,001)	0.7 (0.7)	–	1,057 (1,002)
Air	–	24 (23)	–	24 (23)
Raw Water Makeup	–	0.8 (0.8)	–	0.8 (0.8)
Auxiliary Power	–	–	9.8 (9.3)	9.8 (9.3)
TOTAL	**1,056 (1,001)**	**26 (25)**	**9.8 (9.3)**	**1,092 (1,035)**
Heat Out GJ/hr (MMBtu/hr)				
Stack Gas	–	535 (507)	–	535 (507)
Sulfur	–	–	–	–
Motor Losses and Design Allowances	–	–	8.7 (8.2)	8.7 (8.2)
Cooling Load[A]	–	126 (119)	–	126 (119)
CO_2 Product Stream	–	–	–	–
Deaerator Vent	–	–	–	–
Ambient Losses[B]	–	10 (9.8)	–	10 (9.8)
Power	–	–	419 (397)	419 (397)
TOTAL	**–**	**671 (636)**	**428 (405)**	**1,098 (1,041)**
Unaccounted Energy[C]	–	-6.6 (-6.2)	–	-6.6 (-6.2)

[A]Includes miscellaneous cooling loads
[B]Ambient losses include all losses to the environment through radiation, convection, etc. Sources of these losses include the combustor
[C]By difference

3.4.5 Case SC1A – Part Load Performance Results

Plant performance results are summarized at each discrete load point in Exhibit 3-63. Exhibit 3-64 displays a detailed breakdown of the auxiliary power requirement at each discrete load point. Air emissions at each discrete load point are summarized in Exhibit 3-65. The results presented in this section are reflective of steady-state operation. Performance associated with specific operating profiles (e.g., load-following, peaking) will differ.

Exhibit 3-63. Case SC1A part load plant performance summary

Performance Summary					
Percent Load	**100%**	**75%**	**50%**	**25%**	**15%**
Combustion Turbine Power, MWe	116	88	58	29	18
Steam Turbine Power, MWe	–	–	–	–	–
Total Gross Power, MWe	**116**	**88**	**58**	**29**	**18**
Nameplate Capacity, MWe	**116**	**116**	**116**	**116**	**116**
Total Auxiliaries, MWe	**3**	**2**	**2**	**2**	**1**
Total Auxiliaries, % of Gross Power	**2.3%**	**2.6%**	**3.3%**	**5.5%**	**8.3%**
Net Power, MWe	**114**	**85**	**56**	**28**	**16**
HHV Net Plant Efficiency, %	38.8%	36.7%	32.1%	24.3%	18.8%
HHV Net Plant Heat Rate, kJ/kWh (Btu/kWh)	9,290 (8,805)	9,815 (9,302)	11,210 (10,625)	14,788 (14,016)	19,188 (18,187)
HHV Combustion Turbine Efficiency, %	39.7%	37.7%	33.2%	25.8%	20.5%
LHV Net Plant Efficiency, %	42.9%	40.6%	35.6%	27.0%	20.8%
LHV Net Plant Heat Rate, kJ/kWh (Btu/kWh)	8,385 (7,948)	8,859 (8,396)	10,118 (9,590)	13,347 (12,651)	17,319 (16,416)
LHV Combustion Turbine Efficiency, %	44.0%	41.7%	36.8%	28.5%	22.7%
Steam Turbine Cycle Efficiency, %	–	–	–	–	–
Steam Turbine Heat Rate, kJ/kWh (Btu/kWh)	–	–	–	–	–
Condenser Duty, GJ/hr (MMBtu/hr)	–	–	–	–	–
Natural Gas Feed Flow, kg/hr (lb/hr)	20,196 (44,524)	16,006 (35,287)	12,061 (26,590)	7,777 (17,145)	5,886 (12,977)
HHV Thermal Input, kWt	293,370	232,511	175,202	112,968	85,506
LHV Thermal Input, kWt	264,796	209,864	158,137	101,964	77,178
Raw Water Withdrawal, (m^3/min)/MWnet (gpm/MWnet)	0.002 (0.5)	0.002 (0.5)	0.002 (0.5)	0.002 (0.5)	0.002 (0.5)
Raw Water Consumption, (m^3/min)/MWnet (gpm/MWnet)	0.002 (0.5)	0.002 (0.5)	0.002 (0.5)	0.002 (0.5)	0.002 (0.5)

Exhibit 3-64. Case SC1A part load plant power summary

Power Summary					
Percent Load	**100%**	**75%**	**50%**	**25%**	**15%**
Combustion Turbine Power, MWe	116	88	58	29	18
Steam Turbine Power, MWe	–	–	–	–	–
Total Gross Power, MWe	**116**	**88**	**58**	**29**	**18**
Nameplate Capacity, MWe	**116**	**116**	**116**	**116**	**116**
Auxiliary Load Summary					
Air Cooled Condenser Fans	–	–	–	–	–
Ancillary Glycol Cooling Loops, kWe	425	321	215	123	88
Attemperating Air Fan, kWe	–	–	–	30	50
Combustion Turbine Auxiliaries, kWe	1,010	1,010	1,010	1,010	1,010
Combustion Turbine Water Injection Pump, kWe	30	20	10	10	0
Condensate Pumps, kWe	–	–	–	–	–
Feedwater Pumps, kWe	–	–	–	–	–
Ground Water Pumps, kWe	10	4	3	1	1
Miscellaneous Balance of Plant, kWe[A]	58	44	29	15	9
Natural Gas Compression, kWe	820	650	490	320	240
SCR, kWe	1	1	1	1	1
Steam Turbine Auxiliaries, kWe	–	–	–	–	–
Transformer Losses, kWe	360	270	180	90	60
Total Auxiliaries, MWe	**3**	**2**	**2**	**2**	**1**
Net Power, MWe	**114**	**85**	**56**	**28**	**16**

[A]Includes plant control systems, lighting, HVAC, and miscellaneous low voltage loads

Exhibit 3-65. Case SC1A part load air emissions summary

Emissions Summary					
Percent Load	**100%**	**75%**	**50%**	**25%**	**15%**
SO_2, kg/MWh-gross (lb/MWh-gross)	0.004 (0.008)	0.004 (0.009)	0.004 (0.010)	0.006 (0.013)	0.007 (0.016)
NOx, kg/MWh-gross (lb/MWh-gross)	0.028 (0.061)	0.029 (0.064)	0.033 (0.073)	0.043 (0.094)	0.054 (0.119)
Particulate, kg/MWh-gross (lb/MWh-gross)	0.019 (0.041)	0.025 (0.055)	0.037 (0.082)	0.079 (0.173)	0.135 (0.299)
Hg, kg/MWh-gross (lb/MWh-gross)	0.000 (0.000)	0.000 (0.000)	0.000 (0.000)	0.000 (0.000)	0.000 (0.000)
VOC, kg/MWh-gross (lb/MWh-gross)	0.010 (0.022)	0.010 (0.023)	0.012 (0.026)	0.015 (0.034)	0.019 (0.042)
CO, kg/MWh-gross (lb/MWh-gross)	0.043 (0.095)	0.045 (0.100)	0.051 (0.114)	0.066 (0.147)	0.084 (0.185)
CO_2, kg/MWh-gross (lb/MWh-gross)	463 (1,020)	488 (1,075)	553 (1,220)	715 (1,575)	900 (1,985)
CO_2, kg/MWh-net (lb/MWh-net)	474 (1,044)	501 (1,104)	572 (1,262)	756 (1,667)	982 (2,165)

All emissions are maintained at or below the environmental target emission limits across the entire load range.

Exhibit 3-66 displays the Case SC1A itemized efficiencies (HHV net plant efficiency and HHV CT efficiency) and normalized auxiliary power consumption across the load range.

Exhibit 3-66. Case SC1A part load itemized efficiencies

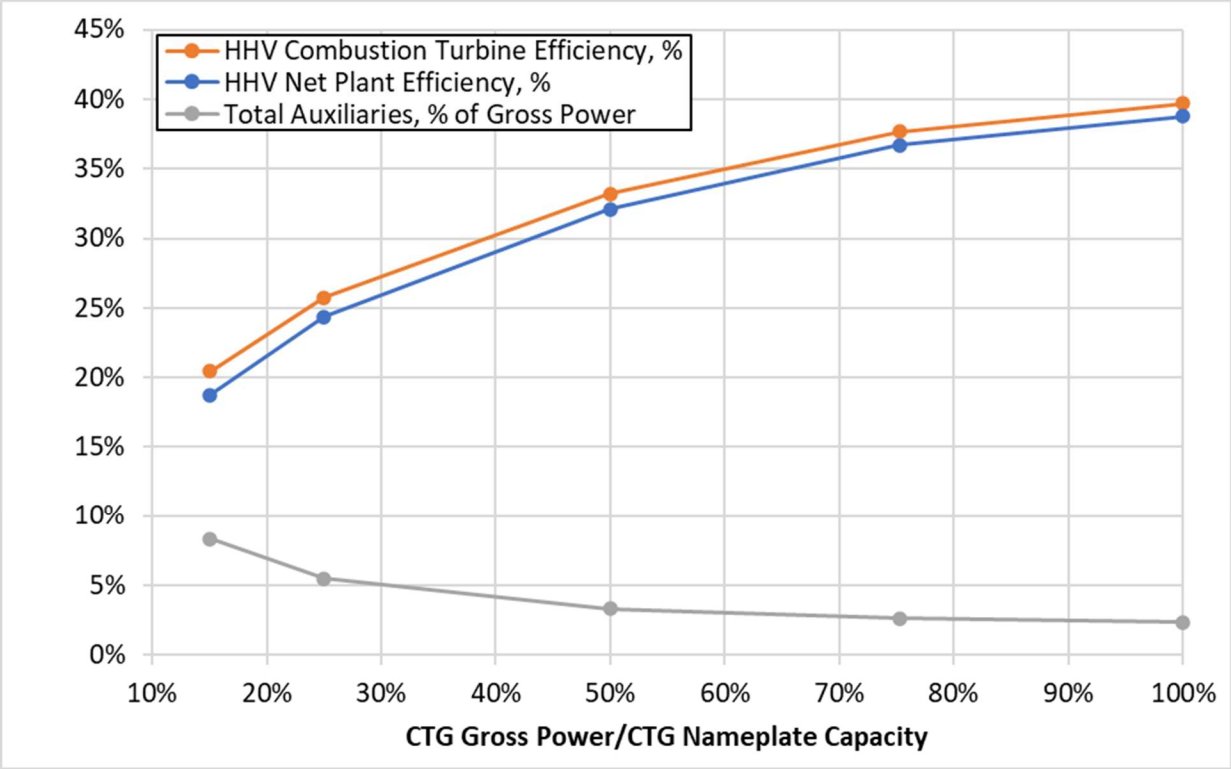

The decrease in part load net plant efficiency is primarily attributable to two key factors: 1) a decrease in the part load CT efficiency, and 2) an increase in the normalized auxiliary power consumption.

The decrease in the part load CT efficiency is an expected occurrence. At 25 percent load and below, attemperating air is required to reduce the exhaust gas below the maximum operating temperature of the SCR.

3.4.6 Case SC1A – Major Equipment List

Case SC1A – Account 3: Feedwater and Miscellaneous Balance of Plant Systems

Equipment No.	Description	Type	Design Condition	Operating Qty.	Spares
1	Service Air Compressors	Flooded screw	13 m^3/min @ 0.7 MPa (450 scfm @ 100 psig)	2	1
2	Instrument Air Dryers	Duplex, regenerative	13 m^3/min (450 scfm)	2	1
3	Engine-Driven Fire Pump	Vertical turbine, diesel engine	3,785 lpm @ 110 m H_2O (1,000 gpm @ 350 ft H_2O)	1	1
4	Fire Service Booster Pump	Two-stage horizontal centrifugal	2,650 lpm @ 80 m H_2O (700 gpm @ 250 ft H_2O)	1	1
5	Raw Water Pumps	Stainless steel, single suction	120 lpm @ 20 m H_2O (030 gpm @ 60 ft H_2O)	2	1
6	Filtered Water Pumps	Stainless steel, single suction	110 lpm @ 50 m H_2O (30 gpm @ 160 ft H_2O)	2	1
7	Filtered Water Tank	Vertical, cylindrical	109,000 liter (29,000 gal)	1	0

Equipment No.	Description	Type	Design Condition	Operating Qty.	Spares
8	Makeup Water Demineralizer	Multi-media filter, cartridge filter, RO membrane assembly and electro-deionization unit	230 lpm (60 gpm)	1	0
9	Liquid Waste Treatment System	–	10 years, 24-hour storm	1	0
10	Gas Pipeline	Underground, coated carbon steel, wrapped cathodic protection	15 m^3/min @ 3.4 MPa (514 acfm @ 490 psia) 39 cm (16 in) standard wall pipe	16 km (10 mile)	0
11	Gas Metering Station	–	15 m^3/min (514 acfm)	1	0

Case SC1A – Account 6: Combustion Turbine and Accessories

Equipment No.	Description	Type	Design Condition	Operating Qty.	Spares
1	Combustion Turbine	Aeroderivative class w/ single annular combustor	120 MW	1	0
2	Combustion Turbine Generator	Hydrogen Cooled	140 MVA @ 0.85 p.f., 18 kV, 60 Hz, 3-phase	1	0
3	Natural Gas Compressor	Integrally geared, multi-stage centrifugal	11 m^3/min 371 acfm	1	0
4	Water Injection Pump	Integrally geared centrifugal	200 lpm @ 690 m H_2O (100 gpm @ 2260 ft H_2O)	1	0

Case SC1A – Account 7: Ductwork, and Stack

Equipment No.	Description	Type	Design Condition	Operating Qty.	Spares
1	Stack	CS plate, type 409SS liner	27 m (90 ft) high x 5.2 m (17 ft) diameter	1	0
2	CO Catalyst	–	930,000 kg/hr (2,040,000 lb/hr)	1	0
3	SCR Reactor	–	930,000 kg/hr (2,040,000 lb/hr)	1	0
4	SCR Catalyst	–	Space available for an additional catalyst layer	1 layer	0
5	Dilution Air Blowers	Centrifugal	7 m^3/min @ 108 cm WG (240 scfm @ 42 in WG)	1	1
6	Ammonia Feed Pump	Centrifugal	1.4 lpm @ 90 m H_2O (0.4 gpm @ 300 ft H_2O)	1	1
7	Ammonia Storage Tank	Horizontal tank	20,000 liter (5,000 gal)	1	0

Case SC1A – Account 9: Cooling System

Equipment No.	Description	Type	Design Condition	Operating Qty.	Spares
1	Glycol Cooling Loops	Industrial grade, air to glycol, closed loop heat exchanger	30 GJ/hr (24 MMBtu/hr) heat duty	5	0

Case SC1A – Account 11: Accessory Electric Plant

Equipment No.	Description	Type	Design Condition	Operating Qty.	Spares
1	CTG Transformer	Oil-filled	18 kV/345 kV, 140 MVA, 3-ph, 60 Hz	1	0
2	Medium Voltage Transformer	Oil-filled	18 kV/4.16 kV, 2 MVA, 3-ph, 60 Hz	1	1

Equipment No.	Description	Type	Design Condition	Operating Qty.	Spares
3	Low Voltage Transformer	Dry ventilated	4.16 kV/480 V, 0 MVA, 3-ph, 60 Hz	1	1
4	CTG Isolated Phase Bus Duct and Tap Bus	Aluminum, self-cooled	18 kV, 3-ph, 60 Hz	1	0
5	Medium Voltage Switchgear	Metal clad	4.16 kV, 3-ph, 60 Hz	1	1
6	Low Voltage Switchgear	Metal enclosed	480 V, 3-ph, 60 Hz	1	1
7	Emergency Diesel Generator	Sized for emergency shutdown	750 kW, 480 V, 3-ph, 60 Hz	1	0

Case SC1A – Account 12: Instrumentation and Control

Equipment No.	Description	Type	Design Condition	Operating Qty.	Spares
1	DCS - Main Control	Monitor/keyboard; Operator printer (laser color); Engineering printer (laser B&W)	Operator stations/printers and engineering stations/printers	1	0
2	DCS - Processor	Microprocessor with redundant input/output	N/A	1	0
3	DCS - Data Highway	Fiber optic	Fully redundant, 25% spare	1	0

3.4.7 Case SC1A – Cost Estimating

The cost estimating method was described previously in Section 2.8. Exhibit 3-67 shows a detailed breakdown of the capital costs; Exhibit 3-68 shows the owner's costs, along with the TOC; Exhibit 3-69 shows the initial and annual O&M costs; and Exhibit 3-70 and Exhibit 3-71 show the startup and shutdown costs.

The estimated TPC of Case SC1A is $119 million. The project contingency is 13.9 percent of the TPC.

Exhibit 3-67. Case SC1A total plant cost details

Case:		SC1A	– NGSC Large Aeroderivative (1x)				Estimate Type:			Conceptual
									Cost Base:	Dec 2018
Item No.	Description	Equipment Cost	Material Cost	Labor		Bare Erected Cost	Eng'g CM H.O.& Fee	Contingencies		Total Plant Cost
				Direct	Indirect			Process	Project	$/1,000
3						Feedwater & Miscellaneous BOP Systems				
3.4	Service Water Systems	$307	$585	$1,895	$0	$2,786	$557	$0	$669	$4,013
3.6	Natural Gas Pipeline and Start-Up System	$2,259	$97	$73	$0	$2,429	$486	$0	$437	$3,352
3.9	Miscellaneous Plant Equipment	$3,382	$444	$1,719	$0	$5,544	$1,109	$0	$1,331	$7,983
	SUBTOTAL 3	**$5,947**	**$1,126**	**$3,686**	**$0**	**$10,759**	**$2,152**	**$0**	**$2,436**	**$15,347**
6						Combustion Turbine & Accessories				
6.1	Combustion Turbine Generator	$35,847	$0	$2,181	$0	$38,028	$7,606	$0	$6,845	$52,479
6.3	Combustion Turbine Accessories	$650	$0	$40	$0	$689	$138	$0	$124	$951
6.4	Compressed Air Piping	$0	$214	$49	$0	$263	$53	$0	$47	$363
6.5	Combustion Turbine Foundations	$0	$337	$365	$0	$702	$140	$0	$168	$1,011
	SUBTOTAL 6	**$36,496**	**$552**	**$2,634**	**$0**	**$39,682**	**$7,936**	**$0**	**$7,185**	**$54,804**
7						Ductwork & Stack				
7.3	Ductwork	$0	$555	$385	$0	$940	$188	$0	$169	$1,297
7.4	Stack	$2,460	$0	$455	$0	$2,915	$583	$0	$525	$4,023
7.5	Ductwork & Stack Foundations	$0	$414	$388	$0	$802	$160	$0	$192	$1,154
7.6	Selective Catalytic Reduction System[A]	$1,021	$429	$598	$0	$2,047	$409	$0	$369	$2,825
7.7	Carbon Monoxide Reduction System	$0	$104	$69	$0	$173	$35	$0	$31	$239
	SUBTOTAL 7	**$3,480**	**$1,501**	**$1,896**	**$0**	**$6,877**	**$1,375**	**$0**	**$1,286**	**$9,539**
9						Cooling Water System				
9.6	Component Cooling Water System[B]	$869	$0	$667	$0	$1,536	$307	$0	$276	$2,120
	SUBTOTAL 9	**$869**	**$0**	**$667**	**$0**	**$1,536**	**$307**	**$0**	**$276**	**$2,120**
11						Accessory Electric Plant				
11.1	Generator Equipment	$866	$0	$653	$0	$1,519	$304	$0	$273	$2,096
11.2	Station Service Equipment	$1,051	$0	$90	$0	$1,141	$228	$0	$205	$1,575
11.3	Switchgear & Motor Control	$1,501	$0	$260	$0	$1,761	$352	$0	$317	$2,431
11.4	Conduit & Cable Tray	$0	$363	$1,045	$0	$1,408	$282	$0	$253	$1,943
11.5	Wire & Cable	$0	$542	$968	$0	$1,509	$302	$0	$272	$2,083
11.6	Protective Equipment	$36	$0	$123	$0	$159	$32	$0	$29	$219
11.7	Standby Equipment	$268	$0	$248	$0	$516	$103	$0	$93	$712
11.8	Main Power Transformers	$1,912	$0	$39	$0	$1,951	$390	$0	$351	$2,692
11.9	Electrical Foundations	$0	$26	$65	$0	$91	$18	$0	$22	$131
	SUBTOTAL 11	**$5,633**	**$930**	**$3,492**	**$0**	**$10,055**	**$2,011**	**$0**	**$1,815**	**$13,882**
12						Instrumentation & Control				
12.1	Natural Gas Simple Cycle Control Equipment	$82	$0	$52	$0	$134	$27	$0	$24	$185
12.2	Combustion Turbine Control Equipment	$157	$0	$100	$0	$257	$51	$0	$46	$355
12.4	Other Major Component Control Equipment	$220	$0	$140	$0	$360	$72	$0	$65	$497
12.5	Signal Processing Equipment	$184	$0	$6	$0	$189	$38	$0	$34	$261

Case:		SC1A	– NGSC Large Aeroderivative (1x)					Estimate Type:		Conceptual
								Cost Base:		Dec 2018
Item No.	Description	Equipment Cost	Material Cost	Labor		Bare Erected Cost	Eng'g CM H.O.& Fee	Contingencies		Total Plant Cost
				Direct	Indirect			Process	Project	$/1,000
12.6	Control Boards, Panels & Racks	$49	$0	$30	$0	$78	$16	$0	$14	$108
12.7	Distributed Control System Equipment	$2,698	$0	$82	$0	$2,780	$556	$0	$500	$3,836
12.8	Instrument Wiring & Tubing	$223	$178	$713	$0	$1,114	$223	$0	$200	$1,537
12.9	Other Instrumentation & Controls Equipment	$154	$0	$357	$0	$511	$102	$0	$92	$706
	SUBTOTAL 12	**$3,766**	**$178**	**$1,480**	**$0**	**$5,424**	**$1,085**	**$0**	**$976**	**$7,485**
13	**Improvements to Site**									
13.1	Site Preparation	$0	$260	$5,526	$0	$5,786	$1,157	$0	$1,389	$8,332
13.2	Site Improvements	$0	$837	$1,106	$0	$1,943	$389	$0	$466	$2,798
13.3	Site Facilities	$803	$0	$843	$0	$1,646	$329	$0	$395	$2,371
	SUBTOTAL 13	**$803**	**$1,098**	**$7,474**	**$0**	**$9,375**	**$1,875**	**$0**	**$2,250**	**$13,500**
14	**Buildings & Structures**									
14.1	Combustion Turbine Area	$0	$164	$86	$0	$250	$50	$0	$45	$345
14.4	Administration Building	$0	$196	$133	$0	$329	$66	$0	$59	$454
14.7	Machine Shop	$0	$293	$187	$0	$481	$96	$0	$87	$663
14.8	Warehouse	$0	$228	$138	$0	$366	$73	$0	$66	$505
14.9	Other Buildings & Structures	$0	$167	$121	$0	$288	$58	$0	$52	$398
	SUBTOTAL 14	**$0**	**$1,048**	**$666**	**$0**	**$1,714**	**$343**	**$0**	**$309**	**$2,366**
	TOTAL	**$56,996**	**$6,433**	**$21,995**	**$0**	**$85,423**	**$17,085**	**$0**	**$16,534**	**$119,042**

[A] An air attemperation fan is included in the cost of the SCR for temperature control; [B] Component cooling water system consists of a closed loop system and glycol-to-air heat exchangers. The system utilizes a 45 percent solution of glycol and water

Exhibit 3-68. Case SC1A owner's costs

Description	$/1,000
Pre-Production Costs	
6 Months All Labor	$1,251
1 Month Maintenance Materials	$133
1 Month Non-fuel Consumables	$90
1 Month Waste Disposal	$0
25% of 1 Months Fuel Cost at 100% CF	$807
2% of TPC	$2,381
Total	**$4,662**
Inventory Capital	
60-day supply of consumables at 100% CF	$176
0.5% of TPC (spare parts)	$595
Total	**$771**
Other Costs	
Initial Cost for Catalyst and Chemicals	$583
Land	$60
Other Owner's Costs	$17,856
Financing Costs	$3,214
Total Overnight Costs (TOC)	**$146,190**

Exhibit 3-69. Case SC1A initial and annual operating and maintenance costs

Case:	SC1A	– NGSC Large Aeroderivative (1x)			Cost Base:	Dec 2018
Plant Size (MW, gross):	114		Heat Rate-net (Btu/kWh):		8,805	
Operating & Maintenance Labor						
Operating Labor					**Operating Labor Requirements per Shift**	
Operating Labor Rate (base):	38.50	**$/hour**			Skilled Operator:	1.0
Operating Labor Burden:	30.00	**% of base**			Operator:	0.0
Labor O-H Charge Rate:	25.00	**% of labor**			Foreman:	1.0
					Lab Techs, etc.:	0.5
					Total:	**2.5**
Fixed Operating Costs						
						Annual Cost ($)
					Annual Operating Labor:	$1,096,095
					Maintenance Labor:	$904,722
					Administrative & Support Labor:	$500,204
					Property Taxes and Insurance:	$2,380,847
					Total:	**$4,881,868**
Variable Operating Costs						
						Annual Cost ($)
					Maintenance Material:	$1,596,568 x CF
Consumables						
	Initial Fill	**Per Day**	**Per Unit**		**Initial Fill**	**Annual Cost ($)**
Water (gal/1000):	0	40	$1.90		$0	$27,962 x CF
Demineralized Water Trailer Rental (Kgal)	0	80.64	$25.00		$0	$735,843 x CF
Ammonia (19 wt%, ton):	0	1.9	$300.00		$0	$204,084 x CF
SCR Catalyst (ft^3):	1,221	0.67	$150.00		$183,137	$36,627 x CF
CO Catalyst (ft^3):	100	0.05	$4,000.00		$400,000	$80,000 x CF
Subtotal:					**$583,137**	**$1,084,516 x CF**
Waste Disposal						
SCR Catalyst (ft^3):	0	0.67	$2.50		$0	$610 x CF
CO Catalyst (ft^3):	0	0.05	$2.50		$0	$50 x CF
Subtotal:					**$0**	**$660 x CF**
				Variable Operating Costs Total:	**$583,137**	**$2,681,745 x CF**
Fuel Cost						
Natural Gas (MMBtu):	0	24,025	$4.42		$0	$38,758,741 x CF
				Fuel Costs Total:	**$0**	**$38,758,741 x CF**

Exhibit 3-70. Case SC1A synchronization startup and shutdown costs

Event to Synchronization		Fast Start	Normal Start	Shutdown
Energy and Duration				
Energy Produced	MWh	-	-	-
Duration	min	2	2	4
NG Heat Input (HHV)	MMBtu	11	11	20
House Energy Consumed	MWh	0.0	0.0	0.0
Aux Boiler Heat Input (HHV)	MMBtu	-	-	-
Costs				
Energy Sold Cost	$	-	-	-
Variable O&M Cost	$	5	5	5
Natural Gas Cost	$	50	50	85
House Energy Cost	$	-	-	-
Total Cost for Event	**$**	**55**	**55**	**90**

Exhibit 3-71. Case SC1A full load startup and shutdown costs

Event to Full Load		Fast Start	Normal Start	Shutdown
Energy and Duration				
Energy Produced	MWh	2.4	5.0	3.9
Duration	min	5	10	8
NG Heat Input (HHV)	MMBtu	27	55	39
House Energy Consumed	MWh	0.1	0.1	0.1
Aux Boiler Heat Input (HHV)	MMBtu	-	-	-
Costs				
Energy Sold Cost	$	(145)	(300)	(235)
Variable O&M Cost	$	10	15	10
Natural Gas Cost	$	120	240	175
House Energy Cost	$	5	5	5
Total Cost for Event	**$**	**(10)**	**(40)**	**(45)**

3.4.8 Case SC2A – Process Description

The process description for Case SC2A is the same as SC1A (see Section 3.4.3), with the exception that there is no water injection to the CT and attemperation air is required at full load.

3.4.9 Case SC2A – Full Load Performance Results

The BFD for SC2A is shown in Exhibit 3-72. Stream tables that outline process data for the numbered streams in the BFD are provided in Exhibit 3-73. The BFD shows only one of the trains, but the flow rates in the stream table are the total system. Full stream tables are only provided for the 100 percent load point.

Exhibit 3-72. Case SC2A BFD, aeroderivative

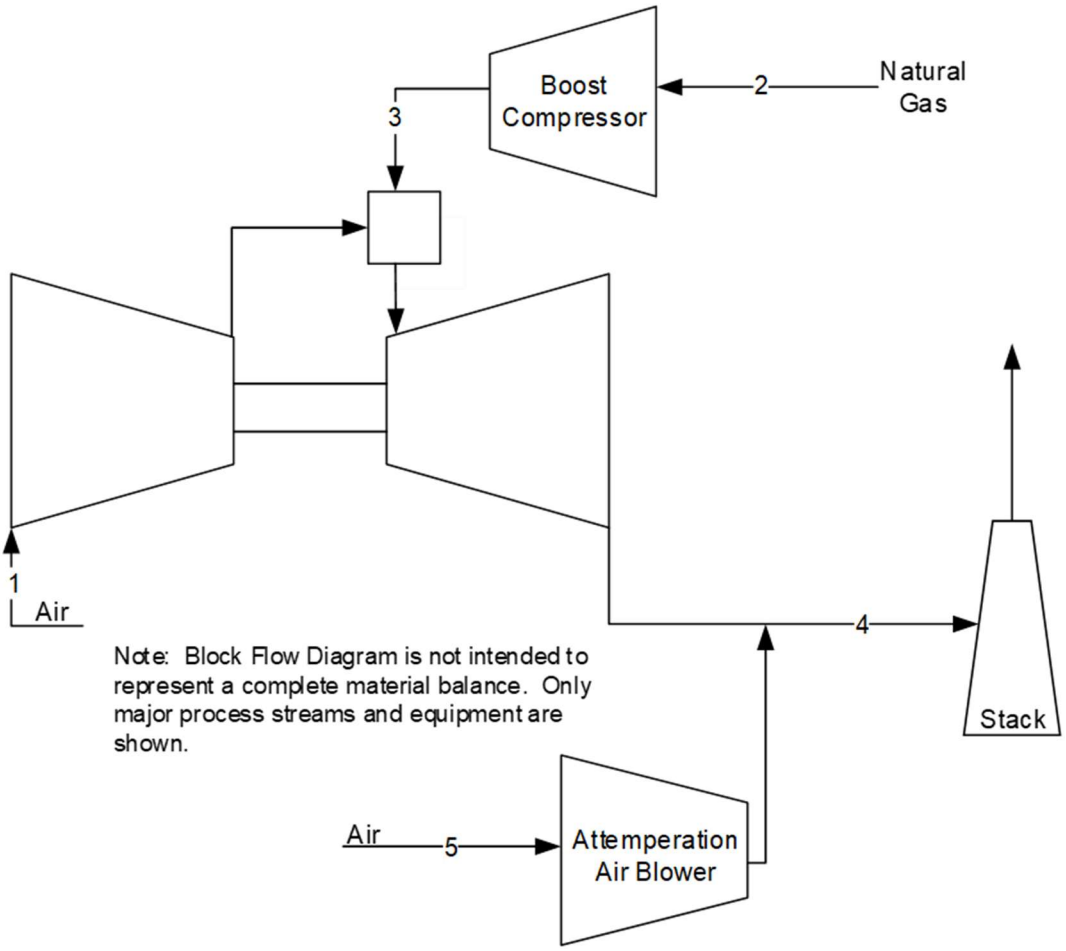

[A]Steam table reference conditions are 32.02°F & 0.089 psia

[B]Aspen thermodynamic reference state is the component's constituent elements in an ideal gas state at 25°C and 1 atm

Exhibit 3-73. Case SC2A stream table, aeroderivative

	1	2	3	4	5
V-L Mole Fraction					
Ar	0.0092	0.0000	0.0000	0.0090	0.0092
CH_4	0.0000	0.9310	0.9310	0.0000	0.0000
CH_4S	0.0000	0.0000	0.0000	0.0000	0.0000
C_2H_6	0.0000	0.0320	0.0320	0.0000	0.0000
C_3H_8	0.0000	0.0070	0.0070	0.0000	0.0000
C_4H_{10}	0.0000	0.0040	0.0040	0.0000	0.0000
CO_2	0.0003	0.0100	0.0100	0.0295	0.0003
H_2O	0.0099	0.0000	0.0000	0.0657	0.0099
N_2	0.7732	0.0160	0.0160	0.7514	0.7732
O_2	0.2074	0.0000	0.0000	0.1445	0.2074
SO_2	0.0000	0.0000	0.0000	0.0000	0.0000
Total	1.0000	1.0000	1.0000	1.0000	1.0000
V-L Flowrate, kg_{mol}/hr	33,754	1,132	1,132	40,479	5,560
V-L Flowrate, kg/hr	974,035	19,615	19,615	1,154,106	160,456
Solids Flowrate, kg/hr	0	0	0	0	0
Temperature, °C	15	27	87	443	15
Pressure, MPa, abs	0.10	3.38	5.55	0.10	0.10
Steam Table Enthalpy, kJ/kg[A]	30.23	17.30	143.07	579.86	30.23
AspenPlus Enthalpy, kJ/kg[B]	-97.58	-4,491.92	-4,366.16	-513.56	-97.58
Density, kg/m^3	1.2	25.4	34.2	0.5	1.2
V-L Molecular, Weight	28.857	17.328	17.328	28.511	28.857
V-L Flowrate, lb_{mol}/hr	74,415	2,496	2,496	89,241	12,259
V-L Flowrate, lb/hr	2,147,380	43,243	43,243	2,544,369	353,746
Solids Flowrate, lb/hr	0	0	0	0	0
Temperature, °F	59	80	188	830	59
Pressure, psia	14.7	490.0	805.0	14.8	14.7
Steam Table Enthalpy, Btu/lb[A]	13.0	7.4	61.5	249.3	13.0
AspenPlus Enthalpy, Btu/lb[B]	-42.0	-1,931.2	-1,877.1	-220.8	-42.0
Density, lb/ft^3	0.076	1.588	2.133	0.030	0.076

[A]Steam table reference conditions are 32.02°F & 0.089 psia
[B]Aspen thermodynamic reference state is the component's constituent elements in an ideal gas state at 25°C and 1 atm

At full load, the plant produces a net output of 103 MW at a net plant efficiency of 36.0 percent (HHV basis). Full load performance for Case SC2A is summarized in Exhibit 3-74. Exhibit 3-75 presents a detailed breakdown of the auxiliary power requirements at full load.

Exhibit 3-74. Case SC2A plant performance summary

Performance Summary	
Combustion Turbine Power, MWe	105
Steam Turbine Power, MWe	–
Total Gross Power, MWe	**105**
Nameplate Capacity, MWe	**105**
Balance of Plant, kWe	1,906
Total Auxiliaries, MWe	**2**
Net Power, MWe	**103**
HHV Net Plant Efficiency, %	36.0%
HHV Net Plant Heat Rate, kJ/kWh (Btu/kWh)	9,988 (9,467)
HHV Combustion Turbine Efficiency, %	36.7%
LHV Net Plant Efficiency, %	39.9%
LHV Net Plant Heat Rate, kJ/kWh (Btu/kWh)	9,015 (8,545)
LHV Combustion Turbine Efficiency, %	40.67%
Steam Turbine Cycle Efficiency, %	–
Steam Turbine Heat Rate, kJ/kWh (Btu/kWh)	–
Condenser Duty, GJ/hr (MMBtu/hr)	–
Natural Gas Feed Flow, kg/hr (lb/hr)	19,615 (43,243)
HHV Thermal Input, kWt	284,930
LHV Thermal Input, kWt	257,177
Raw Water Withdrawal, $(m^3/min)/MW_{net}$ (gpm/MW_{net})	–
Raw Water Consumption, $(m^3/min)/MW_{net}$ (gpm/MW_{net})	–

Exhibit 3-75. Case SC2A plant power summary

Power Summary	
Combustion Turbine Power, MWe	105
Steam Turbine Power, MWe	–
Total Gross Power, MWe	**105**
Nameplate Total Capacity, MWe	**105**
Auxiliary Load Summary	
Air Cooled Condenser Fans	–
Ancillary Glycol Cooling Loops, kWe	12
Attemperating Air Fan, kWe	240
Combustion Turbine Auxiliaries, kWe	560
Combustion Turbine Water Injection Pump, kWe	–
Condensate Pumps, kWe	–
Feedwater Pumps, kWe	–
Ground Water Pumps, kWe	–
Miscellaneous Balance of Plant,[A] kWe	52
Natural Gas Compression, kWe	720
SCR, kWe	1
Steam Turbine Auxiliaries, kWe	–
Transformer Losses, kWe	320
Total Auxiliaries, MWe	**2**
Net Power, MWe	**103**

[A]Includes plant control systems, lighting, HVAC, and miscellaneous low voltage loads

3.4.9.1 Environmental Performance

The environmental targets for emissions of NOx, SO_2, and PM were presented in Section 2.3. A summary of the plant air emissions for Case SC2A is presented in Exhibit 3-76.

Exhibit 3-76. Case SC2A air emissions

	kg/GJ (lb/MMBtu)	tonne/year (ton/year)[A]	kg/MWh (lb/MWh)[B]
SO_2	0.000 (0.001)	4 (4)	0.004 (0.009)
NOx	0.003 (0.007)	27 (30)	0.030 (0.066)
Particulate	0.005 (0.011)	44 (49)	0.048 (0.107)
Hg	0.000 (0.000)	0 (0)	0.000 (0.000)
VOC	0.001 (0.003)	10 (11)	0.011 (0.024)
CO	0.005 (0.011)	43 (47)	0.047 (0.103)
CO_2	51 (119)	459,691 (506,723)	502 (1,106)
CO_2[C]	-	-	511 (1,127)

[A]Calculations based on a 100 percent capacity factor
[B]Emissions based on gross power except where otherwise noted
[C]CO_2 emissions based on net power instead of gross power

For the purpose of this report, the natural gas was assumed to contain the domestic average value of total sulfur of 0.34 gr/100 scf ($4.71x10^{-4}$ lb-S/MMBtu). [9] It was also assumed that the added CH_4S was the sole contributor of sulfur to the natural gas. No sulfur capture systems were required.

Uncontrolled NOx emissions from the CT is about 25 ppmvd at 15 percent O_2, which is achieved with a DLN burner in the CTG. An SCR unit then further reduces the NOx concentration to 3 ppmvd at 15 percent O_2. [18] [24] [16]

The pipeline natural gas was assumed to contain no Hg or HCl, resulting in zero emissions.

The uncontrolled CO and VOC emissions from this aeroderivative CT are 23 ppmvd at 15 percent O_2 and 3.0 ppmvd at 15 percent O_2, respectively. A CO catalyst is used to control the CO emissions to 5 ppmvd at 15 percent O_2 and the VOC emissions to 2 ppmvd at 15 percent O_2. CO_2 emissions represent the uncontrolled discharge from the process.

The carbon balance for the plant is shown in Exhibit 3-77. The carbon input to the plant consists of carbon in the natural gas and carbon in the air. Carbon leaves the plant as CO_2 through the stack.

Exhibit 3-77. Case SC2A carbon balance

Carbon In		Carbon Out	
	kg/hr (lb/hr)		kg/hr (lb/hr)
Natural Gas	14,167 (31,234)	Stack Gas	**14,322 (31,574)**
Air (CO_2)	154 (340)		
Total	**14,322 (31,574)**	**Total**	**14,322 (31,574)**

As shown in Exhibit 3-78, the sulfur content of the natural gas is insignificant. All sulfur in the natural gas is emitted in the stack gas.

Exhibit 3-78. Case SC2A sulfur balance

Sulfur In		Sulfur Out	
	kg/hr (lb/hr)		kg/hr (lb/hr)
Natural Gas	0.2 (0.5)	Stack Gas	0.2 (0.5)
Total	**0.2 (0.5)**	**Total**	**0.2 (0.5)**

No water is used in this aeroderivative case.

3.4.9.2 Energy and Mass Balance Diagrams

An energy and mass balance diagram is shown for Case SC2A in Exhibit 3-79.

An overall plant energy balance is provided in tabular form in Exhibit 3-80. The power out is the CT power prior to generator losses. The power at the generator terminals (shown in Exhibit 3-74) is calculated by multiplying the power out by the full load generator efficiency (98.2 percent).

Exhibit 3-79. Case SC2A energy and mass balance, aeroderivative

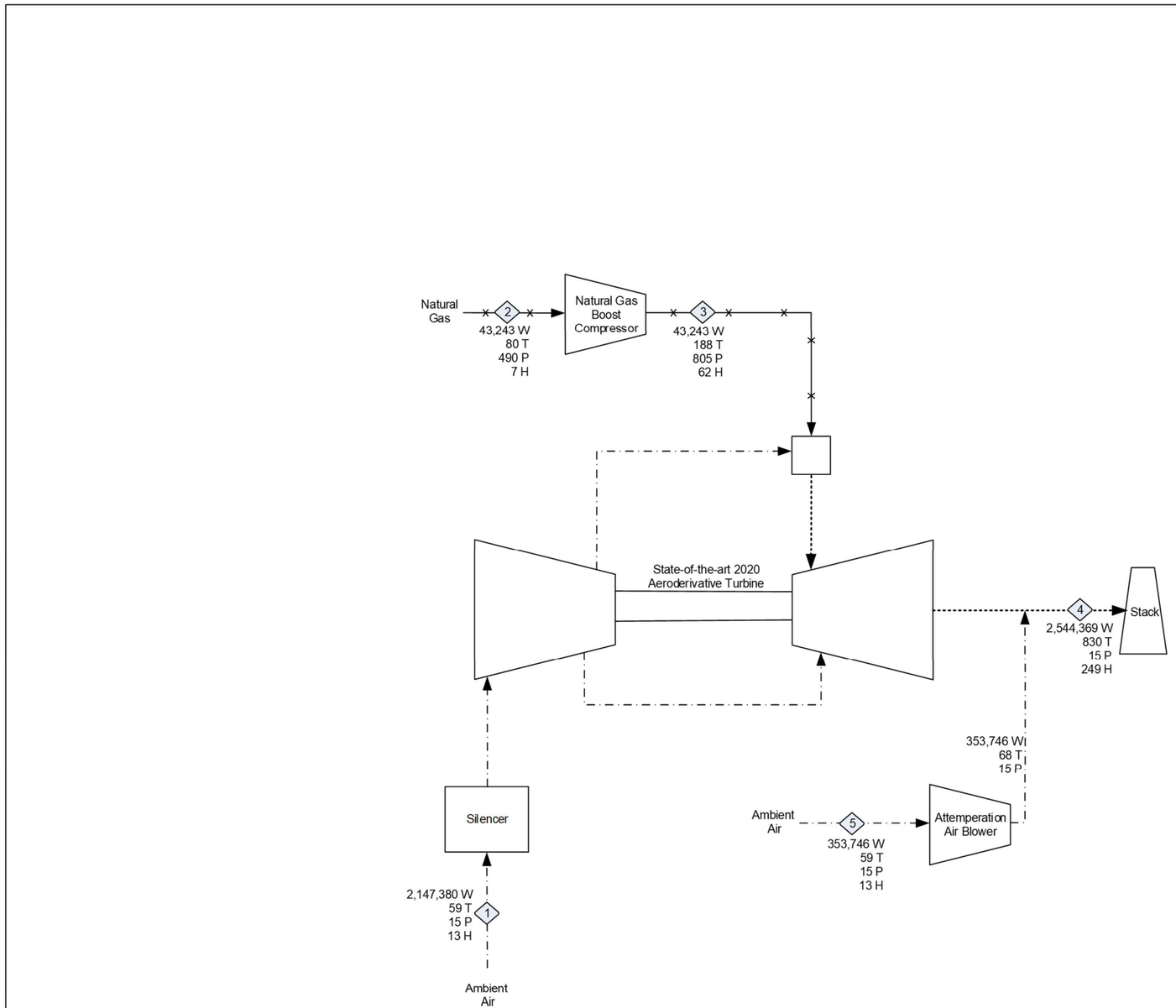

LEGEND

- Air
- Natural Gas
- Nitrogen
- Carbon Dioxide
- Steam
- Water
- Flue Gas

W	Flowrate, lbm/hr
T	Temperature, °F
P	Absolute Pressure, PSIA
H	Enthalpy, Btu/lbm
MWe	Power, Megawatts Electrical

Notes:
1. Enthalpy reference point is natural state at 32 °F and 0.08865 psia

PLANT PERFORMANCE SUMMARY

Gross Plant Power:	105 MWe
Auxiliary Load:	2 MWe
Net Plant Power:	103 MWe
Net Plant Efficiency, HHV:	36.0%
Net Plant Heat Rate, HHV:	9,467 Btu/kWh

NATIONAL ENERGY TECHNOLOGY LABORATORY

DOE/NETL

NGSC
CASE SC2A

ENERGY AND MASS BALANCE DIAGRAM

NATURAL GAS SIMPLE CYCLE PLANT
CASE SC2A
2 X STATE-OF-THE-ART 2020 AERODERIVATIVE CT

DWG. NO.	PAGES
FPB-EMB-CS-SC2A-PG-1	1 OF 1

This page intentionally left blank

Exhibit 3-80. Case SC2A overall energy balance (0°C [32°F] reference)

	HHV	Sensible + Latent	Power	Total
Heat In GJ/hr (MMBtu/hr)				
Natural Gas	1,026 (972)	0.7 (0.7)	–	1,026 (973)
Air	–	34 (33)	–	34 (33)
Raw Water Makeup	–	0.0 (0.0)	–	0.0 (0.0)
Auxiliary Power	–	–	6.9 (6.5)	6.9 (6.5)
TOTAL	**1,026 (972)**	**35 (33)**	**6.9 (6.5)**	**1,068 (1,012)**
Heat Out GJ/hr (MMBtu/hr)				
Stack Gas	–	669 (634)	–	669 (634)
Sulfur	–	–	–	–
Motor Losses and Design Allowances	–	–	16 (15)	16 (15)
Cooling Load[A]	–	3.7 (3.5)	–	3.7 (3.5)
CO_2 Product Stream	–	–	–	–
Deaerator Vent	–	–	–	–
Ambient Losses[B]	–	*8.0 (7.5)*	–	8.0 (7.5)
Power	–	–	377 (357)	377 (357)
TOTAL	**–**	**681 (645)**	**393 (372)**	**1,074 (1,018)**
Unaccounted Energy[C]	**–**	*-6.1 (-5.8)*	–	*-6.1 (-5.8)*

[A]Includes miscellaneous cooling loads
[B]Ambient losses include all losses to the environment through radiation, convection, etc. Sources of these losses include the combustor
[C]By difference

3.4.10 Case SC2A – Part Load Performance Results

Plant performance results are summarized at each discrete load point in Exhibit 3-81. Exhibit 3-82 displays a detailed breakdown of the auxiliary power requirement at each discrete load point. Air emissions at each discrete load point are summarized in Exhibit 3-83. The results presented in this section are reflective of steady-state operation. Performance associated with specific operating profiles (e.g., load-following, peaking) will differ.

Exhibit 3-81. Case SC2A part load plant performance summary

Performance Summary			
Percent Load	**100%**	**75%**	**50%**
Combustion Turbine Power, MWe	105	78	52
Steam Turbine Power, MWe	–	–	–
Total Gross Power, MWe	**105**	**78**	**52**
Nameplate Capacity, MWe	**105**	**105**	**105**
Total Auxiliaries, MWe	**2**	**2**	**1**
Total Auxiliaries, % of Gross Power	**1.8%**	**2.1%**	**2.7%**
Net Power, MWe	**103**	**77**	**51**
HHV Net Plant Efficiency, %	36.0%	32.9%	27.1%
HHV Net Plant Heat Rate, kJ/kWh (Btu/kWh)	9,988 (9,467)	10,955 (10,384)	13,264 (12,572)
HHV Combustion Turbine Efficiency, %	36.7%	33.6%	27.9%
LHV Net Plant Efficiency, %	39.9%	36.4%	30.1%
LHV Net Plant Heat Rate, kJ/kWh (Btu/kWh)	9,015 (8,545)	9,888 (9,372)	11,972 (11,347)
LHV Combustion Turbine Efficiency, %	40.7%	37.2%	30.9%
Steam Turbine Cycle Efficiency, %	–	–	–
Steam Turbine Heat Rate, kJ/kWh (Btu/kWh)	–	–	–
Condenser Duty, GJ/hr (MMBtu/hr)	–	–	–
Natural Gas Feed Flow, kg/hr (lb/hr)	19,615 (43,243)	16,084 (35,459)	12,910 (28,462)
HHV Thermal Input, kWt	284,930	233,644	187,540
LHV Thermal Input, kWt	257,177	210,887	169,273
Raw Water Withdrawal, (m^3/min)/MWnet (gpm/MWnet)	–	–	–
Raw Water Consumption, (m^3/min)/MWnet (gpm/MWnet)	–	–	–

Exhibit 3-82. Case SC2A part load plant power summary

Power Summary			
Percent Load	**100%**	**75%**	**50%**
Combustion Turbine Power, MWe	105	78	52
Steam Turbine Power, MWe	–	–	–
Total Gross Power, MWe	**105**	**78**	**52**
Nameplate Capacity, MWe	**105**	**105**	**105**
Auxiliary Load Summary			
Air Cooled Condenser Fans	–	–	–
Ancillary Glycol Cooling Loops, kWe	12	12	12
Attemperating Air Fan, kWe	240	180	170
Combustion Turbine Auxiliaries, kWe	560	560	560
Combustion Turbine Water Injection Pump, kWe	–	–	–
Condensate Pumps, kWe	–	–	–
Feedwater Pumps, kWe	–	–	–
Ground Water Pumps, kWe	–	–	–
Miscellaneous Balance of Plant, kWe[A]	52	39	26
Natural Gas Compression, kWe	720	590	470
SCR, kWe	1	1	1
Steam Turbine Auxiliaries, kWe	–	–	–
Transformer Losses, kWe	320	240	160
Total Auxiliaries, MWe	**2**	**2**	**1**
Net Power, MWe	**103**	**77**	**51**

[A]Includes plant control systems, lighting, HVAC, and miscellaneous low voltage loads

Exhibit 3-83. Case SC2A part load air emissions summary

Emissions Summary			
Percent Load	**100%**	**75%**	**50%**
SO_2, kg/MWh-gross (lb/MWh-gross)	0.004 (0.009)	0.004 (0.010)	0.005 (0.012)
NOx, kg/MWh-gross (lb/MWh-gross)	0.030 (0.066)	0.033 (0.072)	0.040 (0.087)
Particulate, kg/MWh-gross (lb/MWh-gross)	0.048 (0.107)	0.063 (0.139)	0.096 (0.212)
Hg, kg/MWh-gross (lb/MWh-gross)	0.000 (0.000)	0.000 (0.000)	0.000 (0.000)
VOC, kg/MWh-gross (lb/MWh-gross)	0.011 (0.024)	0.012 (0.026)	0.014 (0.031)
CO, kg/MWh-gross (lb/MWh-gross)	0.047 (0.103)	0.051 (0.113)	0.062 (0.136)
CO_2, kg/MWh-gross (lb/MWh-gross)	502 (1,106)	549 (1,211)	661 (1,457)
CO_2, kg/MWh-net (lb/MWh-net)	511 (1,127)	561 (1,236)	679 (1,497)

All emissions are maintained at or below the environmental target emission limits across the entire load range.

Exhibit 3-84 displays the Case SC2A itemized efficiencies (HHV net plant efficiency and HHV CT efficiency) and normalized auxiliary power consumption across the load range.

Exhibit 3-84. Case SC2A part load itemized efficiencies

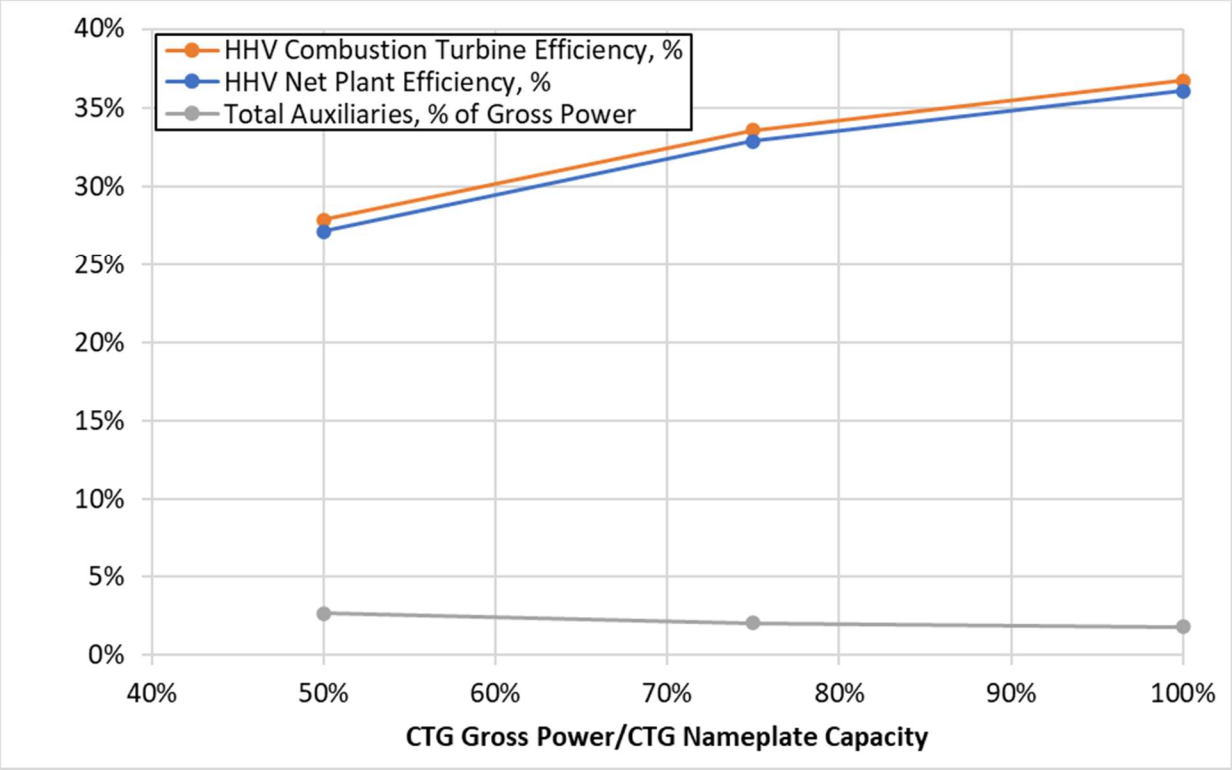

The decrease in part load net plant efficiency is primarily attributable to two key factors: 1) a decrease in the part load CT efficiency, and 2) an increase in the normalized auxiliary power consumption.

The decrease in the part load CT efficiency is an expected occurrence. While Case SC1A only required attemperating air at 25 percent load and below to reduce the exhaust gas below the maximum operating temperature of the SCR, Case SC2A required it at all loads.

3.4.11 Case SC2A – Major Equipment List

Case SC2A – Account 3: Feedwater and Miscellaneous Balance of Plant Systems

Equipment No.	Description	Type	Design Condition	Operating Qty.	Spares
1	Service Air Compressors	Flooded screw	13 m^3/min @ 0.7 MPa (450 scfm @ 100 psig)	2	1
2	Instrument Air Dryers	Duplex, regenerative	13 m^3/min (450 scfm)	2	1
3	Engine-Driven Fire Pump	Vertical turbine, diesel engine	3,785 lpm @ 110 m H_2O (1,000 gpm @ 350 ft H_2O)	1	1
4	Fire Service Booster Pump	Two-stage horizontal centrifugal	2,650 lpm @ 80 m H_2O (700 gpm @ 250 ft H_2O)	1	1
5	Liquid Waste Treatment System	–	10 years, 24-hour storm	1	0
6	Gas Pipeline	Underground, coated carbon steel, wrapped cathodic protection	14 m^3/min @ 3.4 MPa (499 acfm @ 490 psia) 39 cm (16 in) standard wall pipe	16 km (10 mile)	0
7	Gas Metering Station	–	14 m^3/min (499 acfm)	1	0

Case SC2A – Account 6: Combustion Turbine and Accessories

Equipment No.	Description	Type	Design Condition	Operating Qty.	Spares
1	Combustion Turbine	Aeroderivative class w/ dry low emissions	50 MW	2	0
2	Combustion Turbine Generator	Hydrogen Cooled	60 MVA @ 0.85 p.f., 18 kV, 60 Hz, 3-phase	2	0
3	Exhaust Gas Attemperator	Centrifugal	2,410 m^3/min @ 60.9 cm WG (85,060 acfm @ 24 in. WG)	1	0
4	Natural Gas Compressor	Integrally geared, multi-stage centrifugal	05 m^3/min 186 acfm	2	0

Case SC2A – Account 7: Ductwork, and Stack

Equipment No.	Description	Type	Design Condition	Operating Qty.	Spares
1	Stack	CS plate, type 409SS liner	27 m (90 ft) high x 4.3 m (14 ft) diameter	2	0
2	CO Catalyst	–	630,000 kg/hr (1,400,000 lb/hr)	2	0
3	SCR Reactor	–	630,000 kg/hr (1,400,000 lb/hr)	2	0
4	SCR Catalyst	–	Space available for an additional catalyst layer	1 layer	0
5	Dilution Air Blowers	Centrifugal	3 m^3/min @ 108 cm WG (120 scfm @ 42 in WG)	2	1
6	Ammonia Feed Pump	Centrifugal	0.7 lpm @ 90 m H_2O (0.2 gpm @ 300 ft H_2O)	2	1

Equipment No.	Description	Type	Design Condition	Operating Qty.	Spares
7	Ammonia Storage Tank	Horizontal tank	20,000 liter (5,000 gal)	1	0

Case SC2A – Account 9: Cooling System

Equipment No.	Description	Type	Design Condition	Operating Qty.	Spares
1	Glycol Cooling Loops	Industrial grade, air to glycol, closed loop heat exchanger	0 GJ/hr (1 MMBtu/hr) heat duty	5	0

Case SC2A – Account 11: Accessory Electric Plant

Equipment No.	Description	Type	Design Condition	Operating Qty.	Spares
1	CTG Transformer	Oil-filled	18 kV/345 kV, 60 MVA, 3-ph, 60 Hz	2	0
2	Medium Voltage Transformer	Oil-filled	18 kV/4.16 kV, 1 MVA, 3-ph, 60 Hz	1	1
3	Low Voltage Transformer	Dry ventilated	4.16 kV/480 V, 0 MVA, 3-ph, 60 Hz	1	1
4	CTG Isolated Phase Bus Duct and Tap Bus	Aluminum, self-cooled	18 kV, 3-ph, 60 Hz	2	0
5	Medium Voltage Switchgear	Metal clad	4.16 kV, 3-ph, 60 Hz	1	1
6	Low Voltage Switchgear	Metal enclosed	480 V, 3-ph, 60 Hz	1	1
7	Emergency Diesel Generator	Sized for emergency shutdown	750 kW, 480 V, 3-ph, 60 Hz	1	0

Case SC2A – Account 12: Instrumentation and Control

Equipment No.	Description	Type	Design Condition	Operating Qty.	Spares
1	DCS - Main Control	Monitor/keyboard; Operator printer (laser color); Engineering printer (laser B&W)	Operator stations/printers and engineering stations/printers	1	0
2	DCS - Processor	Microprocessor with redundant input/output	N/A	1	0
3	DCS - Data Highway	Fiber optic	Fully redundant, 25% spare	1	0

3.4.12 Case SC2A – Cost Estimating

The cost estimating method was described previously in Section 2.8. Exhibit 3-85 shows a detailed breakdown of the capital costs; Exhibit 3-86 shows the owner's costs, along with the TOC; Exhibit 3-87 shows the initial and annual O&M costs; and Exhibit 3-88 and Exhibit 3-89 show the startup and shutdown costs.

The estimated TPC of Case SC2A is $121 million. The project contingency is 13.9 percent of the TPC.

Exhibit 3-85. Case SC2A total plant cost details

Case:		SC2A	– NGSC Small Aeroderivative (2x)					Estimate Type:		Conceptual
								Cost Base:		Dec 2018
Item No.	Description	Equipment Cost	Material Cost	Labor		Bare Erected Cost	Eng'g CM H.O.& Fee	Contingencies		Total Plant Cost
				Direct	Indirect			Process	Project	$/1,000
3		Feedwater & Miscellaneous BOP Systems								
3.4	Service Water Systems	$284	$542	$1,756	$0	$2,583	$517	$0	$620	$3,719
3.6	Natural Gas Pipeline and Start-Up System	$2,260	$97	$73	$0	$2,430	$486	$0	$437	$3,354
3.9	Miscellaneous Plant Equipment	$3,384	$444	$1,720	$0	$5,547	$1,109	$0	$1,331	$7,988
	SUBTOTAL 3	**$5,928**	**$1,083**	**$3,549**	**$0**	**$10,560**	**$2,112**	**$0**	**$2,389**	**$15,061**
6		Combustion Turbine & Accessories								
6.1	Combustion Turbine Generator	$38,581	$0	$2,348	$0	$40,929	$8,186	$0	$7,367	$56,482
6.3	Combustion Turbine Accessories	$650	$0	$40	$0	$690	$138	$0	$124	$952
6.4	Compressed Air Piping	$0	$215	$49	$0	$263	$53	$0	$47	$363
6.5	Combustion Turbine Foundations	$0	$313	$338	$0	$651	$130	$0	$156	$938
	SUBTOTAL 6	**$39,231**	**$528**	**$2,774**	**$0**	**$42,533**	**$8,507**	**$0**	**$7,695**	**$58,734**
7		Ductwork & Stack								
7.3	Ductwork	$0	$704	$489	$0	$1,193	$239	$0	$215	$1,646
7.4	Stack	$3,122	$0	$578	$0	$3,699	$740	$0	$666	$5,105
7.5	Ductwork & Stack Foundations	$0	$525	$492	$0	$1,017	$203	$0	$244	$1,465
7.6	Selective Catalytic Reduction System[A]	$1,744	$733	$1,022	$0	$3,499	$700	$0	$630	$4,828
7.7	Carbon Monoxide Reduction System	$0	$132	$88	$0	$220	$44	$0	$40	$303
	SUBTOTAL 7	**$4,866**	**$2,093**	**$2,669**	**$0**	**$9,628**	**$1,926**	**$0**	**$1,794**	**$13,348**
9		Cooling Water System								
9.6	Component Cooling Water System[B]	$104	$0	$80	$0	$185	$37	$0	$33	$255
	SUBTOTAL 9	**$104**	**$0**	**$80**	**$0**	**$185**	**$37**	**$0**	**$33**	**$255**
11		Accessory Electric Plant								
11.1	Generator Equipment	$813	$0	$613	$0	$1,426	$285	$0	$257	$1,968
11.2	Station Service Equipment	$838	$0	$72	$0	$910	$182	$0	$164	$1,256
11.3	Switchgear & Motor Control	$1,197	$0	$208	$0	$1,405	$281	$0	$253	$1,938
11.4	Conduit & Cable Tray	$0	$289	$834	$0	$1,123	$225	$0	$202	$1,550
11.5	Wire & Cable	$0	$432	$772	$0	$1,204	$241	$0	$217	$1,661
11.6	Protective Equipment	$28	$0	$98	$0	$127	$25	$0	$23	$175
11.7	Standby Equipment	$255	$0	$235	$0	$490	$98	$0	$88	$676
11.8	Main Power Transformers	$1,683	$0	$34	$0	$1,717	$343	$0	$309	$2,369
11.9	Electrical Foundations	$0	$24	$61	$0	$84	$17	$0	$20	$122
	SUBTOTAL 11	**$4,814**	**$745**	**$2,927**	**$0**	**$8,486**	**$1,697**	**$0**	**$1,532**	**$11,715**
12		Instrumentation & Control								
12.1	Natural Gas Simple Cycle Control Equipment	$66	$0	$42	$0	$108	$22	$0	$20	$150
12.2	Combustion Turbine Control Equipment	$127	$0	$81	$0	$208	$42	$0	$37	$287
12.4	Other Major Component Control Equipment	$178	$0	$113	$0	$291	$58	$0	$52	$402

Case:		SC2A	– NGSC Small Aeroderivative (2x)					Estimate Type:		Conceptual
								Cost Base:		Dec 2018
Item No.	Description	Equipment Cost	Material Cost	Labor		Bare Erected Cost	Eng'g CM H.O.& Fee	Contingencies		Total Plant Cost
				Direct	Indirect			Process	Project	$/1,000
12.5	Signal Processing Equipment	$148	$0	$5	$0	$153	$31	$0	$28	$211
12.6	Control Boards, Panels & Racks	$39	$0	$24	$0	$63	$13	$0	$11	$87
12.7	Distributed Control System Equipment	$2,182	$0	$66	$0	$2,248	$450	$0	$405	$3,103
12.8	Instrument Wiring & Tubing	$180	$144	$576	$0	$901	$180	$0	$162	$1,243
12.9	Other Instrumentation & Controls Equipment	$125	$0	$289	$0	$414	$83	$0	$74	$571
	SUBTOTAL 12	**$3,046**	**$144**	**$1,197**	**$0**	**$4,387**	**$877**	**$0**	**$790**	**$6,054**
13		**Improvements to Site**								
13.1	Site Preparation	$0	$263	$5,575	$0	$5,837	$1,167	$0	$1,401	$8,406
13.2	Site Improvements	$0	$845	$1,116	$0	$1,960	$392	$0	$471	$2,823
13.3	Site Facilities	$811	$0	$850	$0	$1,661	$332	$0	$399	$2,392
	SUBTOTAL 13	**$811**	**$1,107**	**$7,541**	**$0**	**$9,459**	**$1,892**	**$0**	**$2,270**	**$13,620**
14		**Buildings & Structures**								
14.1	Combustion Turbine Area	$0	$155	$82	$0	$236	$47	$0	$43	$326
14.4	Administration Building	$0	$189	$128	$0	$317	$63	$0	$57	$438
14.7	Machine Shop	$0	$283	$181	$0	$464	$93	$0	$83	$640
14.8	Warehouse	$0	$220	$133	$0	$353	$71	$0	$64	$487
14.9	Other Buildings & Structures	$0	$161	$117	$0	$278	$56	$0	$50	$383
	SUBTOTAL 14	**$0**	**$1,008**	**$640**	**$0**	**$1,648**	**$330**	**$0**	**$297**	**$2,274**
	TOTAL	**$58,800**	**$6,709**	**$21,377**	**$0**	**$86,885**	**$17,377**	**$0**	**$16,800**	**$121,062**

[A] An air attemperation fan is included in the cost of the SCR for temperature control; [B] Component cooling water system consists of a closed loop system and glycol-to-air heat exchangers. The system utilizes a 45 percent solution of glycol and water

Exhibit 3-86. Case SC2A owner's costs

Description	$/1,000
Pre-Production Costs	
6 Months All Labor	$1,260
1 Month Maintenance Materials	$135
1 Month Non-fuel Consumables	$30
1 Month Waste Disposal	$0
25% of 1 Months Fuel Cost at 100% CF	$784
2% of TPC	$2,421
Total	**$4,631**
Inventory Capital	
60-day supply of consumables at 100% CF	$60
0.5% of TPC (spare parts)	$605
Total	**$665**
Other Costs	
Initial Cost for Catalyst and Chemicals	$810
Land	$60
Other Owner's Costs	$18,159
Financing Costs	$3,269
Total Overnight Costs (TOC)	**$148,656**

Exhibit 3-87. Case SC2A initial and annual operating and maintenance costs

Case:	SC2A	– NGSC Small Aeroderivative (2x)			Cost Base:	Dec 2018
Plant Size (MW, gross):	103	Heat Rate-net (Btu/kWh):	9,467			
Operating & Maintenance Labor						
Operating Labor			**Operating Labor Requirements per Shift**			
Operating Labor Rate (base):	38.50	**$/hour**	Skilled Operator:	1.0		
Operating Labor Burden:	30.00	**% of base**	Operator:	0.0		
Labor O-H Charge Rate:	25.00	**% of labor**	Foreman:	1.0		
			Lab Techs, etc.:	0.5		
			Total:	**2.5**		
Fixed Operating Costs						
						Annual Cost ($)
					Annual Operating Labor:	$1,096,095
					Maintenance Labor:	$920,072
					Administrative & Support Labor:	$504,042
					Property Taxes and Insurance:	$2,421,241
					Total:	**$4,941,450**
Variable Operating Costs						
						Annual Cost ($)
					Maintenance Material:	$1,623,656 x CF
Consumables						
	Initial Fill	**Per Day**	**Per Unit**	**Initial Fill**		**Annual Cost ($)**
Ammonia (19 wt%, ton):	0	1.8	$300.00	$0		$198,501 x CF
SCR Catalyst (ft^3):	1,652	0.91	$150.00	$247,808		$49,562 x CF
CO Catalyst (ft^3):	141	0.08	$4,000.00	$562,150		$112,430 x CF
Subtotal:				**$809,958**		**$360,492 x CF**
Waste Disposal						
SCR Catalyst (ft^3):	0	0.91	$2.50	$0		$826 x CF
CO Catalyst (ft^3):	0	0.08	$2.50	$0		$70 x CF
Subtotal:				**$0**		**$896 x CF**
			Variable Operating Costs Total:	**$809,958**		**$1,985,044 x CF**
Fuel Cost						
Natural Gas (MMBtu):	0	23,333	$4.42	$0		$37,643,628 x CF
			Fuel Costs Total:	**$0**		**$37,643,628 x CF**

Exhibit 3-88. Case SC2A synchronization startup and shutdown costs

Event to Synchronization		Fast Start	Normal Start	Shutdown
Energy and Duration				
Energy Produced	MWh	-	-	-
Duration	min	3	4	4
NG Heat Input (HHV)	MMBtu	17	25	21
House Energy Consumed	MWh	0.0	0.1	0.0
Aux Boiler Heat Input (HHV)	MMBtu	-	-	-
Costs				
Energy Sold Cost	$	-	-	-
Variable O&M Cost	$	5	5	5
Natural Gas Cost	$	75	110	95
House Energy Cost	$	-	5	5
Total Cost for Event	**$**	**80**	**120**	**105**

Exhibit 3-89. Case SC2A full load startup and shutdown costs

Event to Full Load		Fast Start	Normal Start	Shutdown
Energy and Duration				
Energy Produced	MWh	2.3	4.6	3.5
Duration	min	5	10	8
NG Heat Input (HHV)	MMBtu	32	63	42
House Energy Consumed	MWh	0.1	0.1	0.1
Aux Boiler Heat Input (HHV)	MMBtu	-	-	-
Costs				
Energy Sold Cost	$	(135)	(280)	(210)
Variable O&M Cost	$	5	15	10
Natural Gas Cost	$	145	280	185
House Energy Cost	$	5	10	5
Total Cost for Event	**$**	**20**	**25**	**(10)**

3.5 NATURAL GAS COMBINED CYCLE CASES

This section contains an evaluation of plant designs for cases CC1A-F, CC1A-H, CC2A-F, CC2A-FC, and CC2A-H. The balance of this section is organized as follows:

- Key System Assumptions is a summary of study and modeling assumptions relevant to the NGCC cases.
- Sparing Philosophy is provided for the NGCC cases.
- Process and System Description provides an overview of the technology operation as applied to the NGCC cases. The systems that are common to all NG cases were covered in Section 3.2 and only features that are unique to the NGCC cases are discussed further in this section.
- Performance Results provides the main modeling results from the NGCC cases, including the full load performance summary, part load performance summary, environmental performance, carbon balance, water balance, energy and mass balance diagrams, and energy balance table.
- Equipment List provides an itemized list of major equipment for the NGCC cases with account codes that correspond to the cost accounts in the Cost Estimates section.
- Cost Estimates provides a summary of capital and operating costs for the NGCC cases.
- Process and System Description, Performance Results, Equipment List and Cost Estimates are reported for the NGCC cases.

3.5.1 Key System Assumptions, NGCC

System assumptions for the NGCC cases are compiled in Exhibit 3-90.

Exhibit 3-90. Plant study configuration matrix, NGCC

	CC1A-F	CC1A-H	CC2A-F	CC2A-FC	CC2A-H
Steam Cycle, MPa/°C/°C (psig/°F/°F)	16.4/585/585 (2,400/1,085/1,085)				
Fuel	Natural Gas				
Fuel Pressure at Plant, MPa (psia)	3.0 (430)				
Condenser Pressure, mm Hg (in. Hg)	73.2 (2.88)				
Stack Temperature, °C (°F)	82°C (179°F)	86°C (186°F)	82°C (180°F)		85°C (185°F)
SO_2 Control	Low Sulfur Fuel				
NOx Control	DLN, SCR				
SCR Efficiency, %[A]	92.8				
Ammonia Slip (End of Catalyst Life), ppmv	10				
CO Catalyst Efficiency (CO), %[A]	84.8	83.9	84.9		83.9
CO Catalyst Efficiency (VOC), %[A]	0.0				

[A]Removal efficiencies are based on the flue gas content

3.5.1.1 Balance of Plant, NGCC

The BOP assumptions for the NGCC cases are presented in Exhibit 3-91.

Exhibit 3-91. BOP assumptions, NGCC

Parameter	Value
Cooling System	Air-to-glycol and ACC
Fuel and Other Storage	
Natural Gas	Pipeline supply at 3.0 MPa (430 psia) and 27°C (80°F)
Plant Distribution Voltage	
Motors below 1 hp	110/220 V
Motors between 1 hp and 250 hp	480 V
Motors between 250 hp and 5,000 hp	4,160 V
Motors above 5,000 hp	13,800 V
Steam and CT generators	18,000 V
Grid Interconnection voltage	345 kV
Water and Wastewater	
Makeup Water	The water supply is 50 percent from a local POTW and 50 percent from groundwater and is assumed to be in sufficient quantities to meet plant makeup requirements. Makeup for potable, process, and DI water is drawn from municipal sources.
Process Wastewater	Storm water that contacts equipment surfaces is collected and treated for discharge through a permitted discharge.
Sanitary Waste Disposal	Design includes a packaged domestic sewage treatment plant with effluent discharged to the industrial wastewater treatment system. Sludge is hauled off site. Packaged plant is sized for 5.68 m^3/d (1,500 gpd).
Water Discharge	N/A

3.5.2 Sparing Philosophy, NGCC

Single or dual trains are used to accommodate the size of commercial CTs. There is no redundancy other than normal sparing of rotating equipment. The plant design consists of the following major subsystems:

- CC1A-F
  - One state-of-the-art 2020 F-Class CTG (1 x 100 percent)
- CC1A-H
  - One state-of-the-art 2020 H-Class CTG (1 x 100 percent)
- CC2A-F and CC2A-FC
  - Two state-of-the-art 2020 F-Class CTGs (2 x 50 percent)
- CC2A-H
  - Two state-of-the-art 2020 H-Class CTGs (2 x 50 percent)

- 2x1 NGCC Options
    - Two 3-pressure reheat HRSGs with self-supporting stacks, SCR, and CO systems (2 x 50 percent)
    - One 3-pressure reheat, triple-admission STG (1 x 100 percent)
- 1x1 NGCC Options
    - One 3-pressure reheat HRSG with self-supporting stacks, SCR, and CO systems (1 x 100 percent)
    - One 3-pressure reheat, triple-admission STG (1 x 100 percent)

3.5.3 Case CC1A-F – Process Description

In this section, the NGCC process is described. The system description follows the BFD in Exhibit 3-92 and stream numbers reference the same exhibit. Exhibit 3-93 provides process data for the numbered streams in the BFD. Full stream tables are only provided for the 100 percent load point.

Exhibit 3-92. Case CC1A-F BFD, NGCC

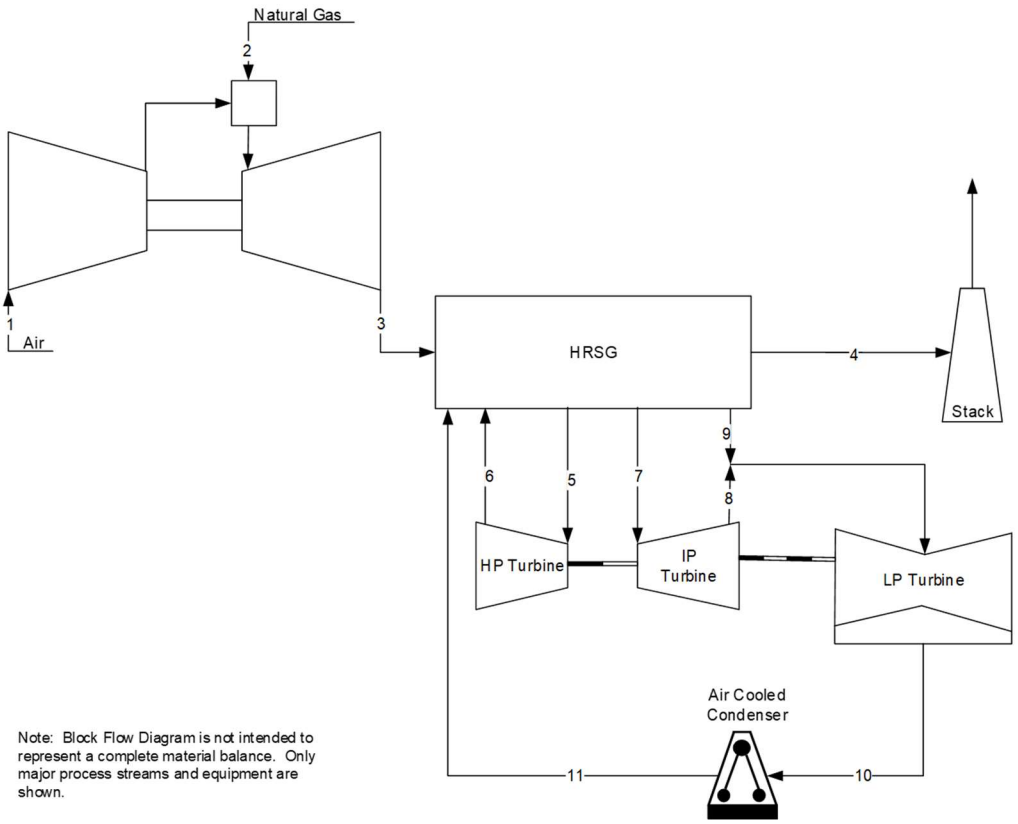

Ambient air (stream 1) is supplied to an inlet filter and compressed before being combined with natural gas (stream 2) in the DLN burner combustor. The flue gas exits the turbine (stream 3) and passes into the HRSG. The HRSG generates both the main steam and reheat steam for the ST. Flue gas exits the HRSG (stream 4) and passes to the plant stack.

Exhibit 3-93. Case CC1A-F stream table, NGCC

	1	2	3	4	5	6	7	8	9	10	11
V-L Mole Fraction											
Ar	0.0092	0.0000	0.0089	0.0089	0.0000	0.0000	0.0000	0.0000	0.0000	0.0000	0.0000
CH_4	0.0000	0.9310	0.0000	0.0000	0.0000	0.0000	0.0000	0.0000	0.0000	0.0000	0.0000
CH_4S	0.0000	0.0000	0.0000	0.0000	0.0000	0.0000	0.0000	0.0000	0.0000	0.0000	0.0000
C_2H_6	0.0000	0.0320	0.0000	0.0000	0.0000	0.0000	0.0000	0.0000	0.0000	0.0000	0.0000
C_3H_8	0.0000	0.0070	0.0000	0.0000	0.0000	0.0000	0.0000	0.0000	0.0000	0.0000	0.0000
C_4H_{10}	0.0000	0.0040	0.0000	0.0000	0.0000	0.0000	0.0000	0.0000	0.0000	0.0000	0.0000
CO_2	0.0003	0.0100	0.0423	0.0423	0.0000	0.0000	0.0000	0.0000	0.0000	0.0000	0.0000
H_2O	0.0099	0.0000	0.0903	0.0903	1.0000	1.0000	1.0000	1.0000	1.0000	1.0000	1.0000
N_2	0.7732	0.0160	0.7417	0.7417	0.0000	0.0000	0.0000	0.0000	0.0000	0.0000	0.0000
O_2	0.2074	0.0000	0.1168	0.1168	0.0000	0.0000	0.0000	0.0000	0.0000	0.0000	0.0000
SO_2	0.0000	0.0000	0.0000	0.0000	0.0000	0.0000	0.0000	0.0000	0.0000	0.0000	0.0000
Total	1.0000	1.0000	1.0000	1.0000	1.0000	1.0000	1.0000	1.0000	1.0000	1.0000	1.0000
V-L Flowrate, kg_{mol}/hr	65,932	2,773	68,785	68,785	14,993	14,283	16,267	16,242	2,097	18,526	18,602
V-L Flowrate, kg/hr	1,902,593	48,052	1,950,645	1,950,645	270,105	257,320	293,053	292,610	37,784	333,753	335,125
Solids Flowrate, kg/hr	0	0	0	0	0	0	0	0	0	0	0
Temperature, °C	15	27	651	82	585	367	584	309	292	46	46
Pressure, MPa, abs	0.10	2.96	0.11	0.10	16.50	3.97	3.56	0.52	0.51	0.01	0.01
Steam Table Enthalpy, kJ/kg[A]	30.23	22.04	870.35	229.40	3,528.12	3,135.71	3,640.40	3,081.60	3,046.59	2,432.87	193.18
AspenPlus Enthalpy, kJ/kg[B]	-97.58	-4,487.18	-657.04	-1,298.00	-12,452.17	-12,844.59	-12,339.89	-12,898.69	-12,933.70	-13,547.43	-15,787.12
Density, kg/m^3	1.2	22.1	0.4	1.0	45.6	14.4	9.2	1.9	2.0	0.1	989.7
V-L Molecular, Weight	28.857	17.328	28.358	28.358	18.015	18.015	18.015	18.015	18.015	18.015	18.015
V-L Flowrate, lb_{mol}/hr	145,355	6,114	151,646	151,646	33,054	31,490	35,862	35,808	4,624	40,843	41,011
V-L Flowrate, lb/hr	4,194,500	105,936	4,300,436	4,300,436	595,481	567,294	646,071	645,094	83,299	735,799	738,823
Solids Flowrate, lb/hr	0	0	0	0	0	0	0	0	0	0	0
Temperature, °F	59	80	1,204	179	1,085	693	1,082	588	557	115	115
Pressure, psia	14.7	430.0	15.3	14.8	2,393.8	575.2	515.7	75.0	73.5	1.5	1.5
Steam Table Enthalpy, Btu/lb[A]	13.0	9.5	374.2	98.6	1,516.8	1,348.1	1,565.1	1,324.9	1,309.8	1,045.9	83.1
AspenPlus Enthalpy, Btu/lb[B]	-42.0	-1,929.1	-282.5	-558.0	-5,353.5	-5,522.2	-5,305.2	-5,545.4	-5,560.5	-5,824.3	-6,787.2
Density, lb/ft^3	0.076	1.380	0.024	0.061	2.850	0.898	0.572	0.122	0.123	0.005	61.784

[A]Steam table reference conditions are 32.02°F & 0.089 psia

[B]Aspen thermodynamic reference state is the component's constituent elements in an ideal gas state at 25°C and 1 atm

3.5.4 Case CC1A-F – Full Load Performance Results

At full load, the plant produces a net output of 369 MW at a net plant efficiency of 52.8 percent (HHV basis). Full load performance for Case CC1A-F is summarized in Exhibit 3-94. Exhibit 3-95 presents a detailed breakdown of the auxiliary power requirements at full load.

Exhibit 3-94. Case CC1A-F plant performance summary

Performance Summary	
Combustion Turbine Power, MWe	243
Steam Turbine Power, MWe	132
Total Gross Power, MWe	**375**
Nameplate Capacity, MWe	**375**
Balance of Plant, kWe	6,183
Total Auxiliaries, MWe	**6**
Net Power, MWe	**369**
HHV Net Plant Efficiency, %	52.8%
HHV Net Plant Heat Rate, kJ/kWh (Btu/kWh)	6,817 (6,461)
HHV Combustion Turbine Efficiency, %	34.8%
LHV Net Plant Efficiency, %	58.5%
LHV Net Plant Heat Rate, kJ/kWh (Btu/kWh)	6,153 (5,832)
LHV Combustion Turbine Efficiency, %	38.59%
Steam Turbine Cycle Efficiency, %	37.9%
Steam Turbine Heat Rate, kJ/kWh (Btu/kWh)	9,493 (8,998)
Condenser Duty, GJ/hr (MMBtu/hr)	750 (710)
Natural Gas Feed Flow, kg/hr (lb/hr)	48,052 (105,936)
HHV Thermal Input, kWt	698,017
LHV Thermal Input, kWt	630,029
Raw Water Withdrawal, $(m^3/min)/MW_{net}$ (gpm/MW_{net})	0.00 (0.02)
Raw Water Consumption, $(m^3/min)/MW_{net}$ (gpm/MW_{net})	0.00 (0.00)

Exhibit 3-95. Case CC1A-F plant power summary

Power Summary	
Combustion Turbine Power, MWe	243
Steam Turbine Power, MWe	132
Total Gross Power, MWe	**375**
Nameplate Total Capacity, MWe	**375**
Auxiliary Load Summary	
Air Cooled Condenser Fans	2,244
Ancillary Glycol Cooling Loops, kWe	45
Attemperating Air Fan, kWe	–
Combustion Turbine Auxiliaries, kWe	525
Combustion Turbine Water Injection Pump, kWe	–
Condensate Pumps, kWe	70
Feedwater Pumps, kWe	1,900
Ground Water Pumps, kWe	–
Miscellaneous Balance of Plant,[A] kWe	187
Natural Gas Compression, kWe	–
SCR, kWe	3
Steam Turbine Auxiliaries, kWe	69
Transformer Losses, kWe	1,140
Total Auxiliaries, MWe	**6**
Net Power, MWe	**369**

[A]Includes plant control systems, lighting, HVAC, and miscellaneous low voltage loads

3.5.4.1 Environmental Performance

The environmental targets for emissions of NOx, SO_2, and PM were presented in Section 2.3. A summary of the plant air emissions for Case CC1A-F is presented in Exhibit 3-96.

Exhibit 3-96. Case CC1A-F air emissions

	kg/GJ (lb/MMBtu)	tonne/year (ton/year)[A]	kg/MWh (lb/MWh)[B]
SO_2	0.000 (0.001)	9 (10)	0.003 (0.006)
NOx	0.002 (0.004)	40 (44)	0.012 (0.027)
Particulate	0.001 (0.003)	28 (31)	0.009 (0.019)
Hg	0.000 (0.000)	0 (0)	0.000 (0.000)
VOC	0.001 (0.002)	17 (18)	0.005 (0.011)
CO	0.001 (0.002)	21 (23)	0.006 (0.014)
CO_2	51 (119)	1,122,317 (1,237,143)	342 (754)
CO_2[C]	-	-	348 (766)

[A]Calculations based on a 100 percent capacity factor
[B]Emissions based on gross power except where otherwise noted
[C]CO_2 emissions based on net power instead of gross power

For the purpose of this report, the natural gas was assumed to contain the domestic average value of total sulfur of 0.34 gr/100 scf ($4.71x10^{-4}$ lb-S/MMBtu). [9] It was also assumed that the added CH_4S was the sole contributor of sulfur to the natural gas. No sulfur capture systems were required.

Uncontrolled NOx emissions from the CT is about 25 ppmvd at 15 percent O_2, which is achieved with a DLN burner in the CTG. An SCR unit then further reduces the NOx concentration to 1.8 ppmvd at 15 percent O_2. [17] [16]

The pipeline natural gas was assumed to contain no Hg or HCl, resulting in zero emissions.

The uncontrolled CO and VOC emissions from this CT are 6.6 ppmvd at 15 percent O_2 and 1.1 ppmvd at 15 percent O_2, respectively. A CO catalyst is used to control the CO emissions to 1.0 ppmvd at 15 percent O_2 and the VOC emissions target of 1.4 ppmvd at 15 percent O_2 does not require further reduction (though the CO catalyst will passively reduce VOC).

The production of PM is a result of system inefficiencies and is not produced or emitted in any significant amount.

CO_2 emissions represent the uncontrolled discharge from the process.

The carbon balance for the plant is shown in Exhibit 3-97. The carbon input to the plant consists of carbon in the natural gas and carbon in the air. Carbon leaves the plant as CO_2 through the stack.

Exhibit 3-97. Case CC1A-F carbon balance

Carbon In		Carbon Out	
	kg/hr (lb/hr)		kg/hr (lb/hr)
Natural Gas	34,707 (76,516)	Stack Gas	34,966 (77,086)
Air (CO_2)	259 (570)		
Total	**34,966 (77,086)**	**Total**	**34,966 (77,086)**

As shown in Exhibit 3-98, the sulfur content of the natural gas is insignificant. All sulfur in the natural gas is emitted in the stack gas.

Exhibit 3-98. Case CC1A-F sulfur balance

Sulfur In		Sulfur Out	
	kg/hr (lb/hr)		kg/hr (lb/hr)
Natural Gas	0.5 (1.1)	Stack Gas	0.5 (1.1)
Total	**0.5 (1.1)**	**Total**	**0.5 (1.1)**

Exhibit 3-99 shows the water balance for Case CC1A-F.

Exhibit 3-99. Case CC1A-F water balance

Water Use	Water Demand	Internal Recycle	Raw Water Withdrawal	Process Water Discharge	Raw Water Consumption
	m^3/min (gpm)	m^3/min (gpm)	m^3/min (gpm)	m^3/min (gpm)	m^3/min (gpm)
Steam Packing	–	–	–	0.0 (2.8)	0.0 (-2.8)
Deaerator Vent	–	–	–	0.0 (2.9)	0.0 (-2.9)
Condenser Makeup	**0.0 (5.7)**	**–**	**0.0 (5.7)**	**–**	**0.0 (5.7)**
BFW Makeup	0.0 (5.7)	–	0.0 (5.7)	–	0.0 (5.7)
Total	0.0 (5.7)	–	0.0 (5.7)	0.0 (5.7)	–

3.5.4.2 Energy and Mass Balance Diagrams

An energy and mass balance diagram is shown for Case CC1A-F in Exhibit 3-100.

An overall plant energy balance is provided in tabular form in Exhibit 3-101. The power out is the combined CT and ST power prior to generator losses. The power at the generator terminals (shown in Exhibit 3-94) is calculated by multiplying the power out by the generator efficiency: 98.6 percent for the CT, and 98.4 percent for the ST.

This page intentionally left blank

Exhibit 3-100. Case CC1A-F energy and mass balance, NGCC

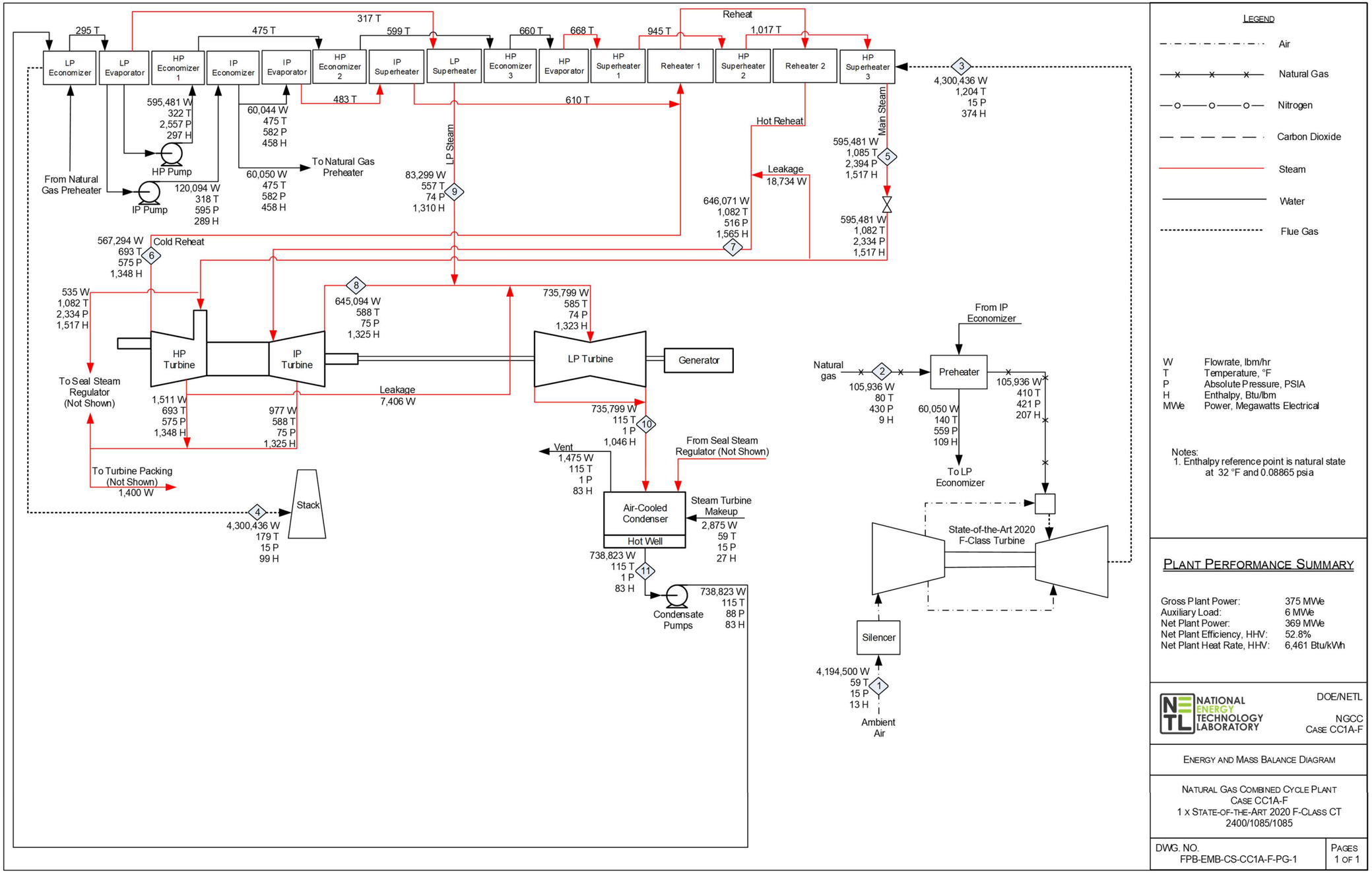

This page intentionally left blank

Exhibit 3-101. Case CC1A-F overall energy balance (0°C [32°F] reference)

	HHV	Sensible + Latent	Power	Total
Heat In GJ/hr (MMBtu/hr)				
Natural Gas	2,513 (2,382)	1.7 (1.6)	–	2,515 (2,383)
Air	–	58 (55)	–	58 (55)
Raw Water Makeup	–	0.1 (0.1)	–	0.1 (0.1)
Auxiliary Power	–	–	22 (21)	22 (21)
TOTAL	**2,513 (2,382)**	**59 (56)**	**22 (21)**	**2,594 (2,459)**
Heat Out GJ/hr (MMBtu/hr)				
Stack Gas	–	447 (424)	–	447 (424)
Sulfur	–	–	–	–
Motor Losses and Design Allowances	–	–	18 (17)	18 (17)
Cooling Load[A]	–	763 (723)	–	763 (723)
CO_2 Product Stream	–	–	–	–
Deaerator Vent	–	0.1 (0.1)	–	0.1 (0.1)
Ambient Losses[B]	–	*26 (25)*	–	26 (25)
Power	–	–	1,349 (1,279)	1,349 (1,279)
TOTAL	**–**	**1,237 (1,172)**	**1,367 (1,296)**	**2,604 (2,468)**
Unaccounted Energy[C]	**–**	*-9.7 (-9.2)*	–	*-9.7 (-9.2)*

[A]Includes condenser and miscellaneous cooling loads
[B]Ambient losses include all losses to the environment through radiation, convection, etc. Sources of these losses include the combustor, reheater, superheater, and transformers
[C]By difference

3.5.5 Case CC1A-F – Part Load Performance Results

Plant performance results are summarized at each discrete load point in Exhibit 3-102. Exhibit 3-103 displays a detailed breakdown of the auxiliary power requirement at each discrete load point. Air emissions at each discrete load point are summarized in Exhibit 3-104. The load points are presented as a fraction of the CT nameplate capacity. The results presented in this section are reflective of steady-state operation. Performance associated with specific operating profiles (e.g., load-following, peaking) will differ.

Exhibit 3-102. Case CC1A-F part load plant performance summary

Performance Summary												
Percent Load, % of CTG Gross Output	**100%**	**95%**	**90%**	**85%**	**80%**	**75%**	**70%**	**65%**	**60%**	**55%**	**50%**	**41%**
Combustion Turbine Power, MWe	243	231	218	207	195	182	170	158	145	134	121	101
Steam Turbine Power, MWe	132	121	112	107	104	102	99	96	92	88	86	84
Total Gross Power, MWe	**375**	**352**	**330**	**314**	**299**	**284**	**269**	**253**	**237**	**222**	**207**	**185**
Nameplate Capacity, MWe	**375**	**375**	**375**	**375**	**375**	**375**	**375**	**375**	**375**	**375**	**375**	**375**
Total Auxiliaries, MWe	**6**	**6**	**5**	**5**	**5**	**5**	**4**	**4**	**4**	**4**	**3**	**3**
Total Auxiliaries, % of Gross Power	**1.6%**	**1.6%**	**1.6%**	**1.6%**	**1.6%**	**1.6%**	**1.6%**	**1.6%**	**1.6%**	**1.6%**	**1.7%**	**1.8%**
Net Power, MWe	**369**	**347**	**325**	**309**	**294**	**280**	**264**	**249**	**233**	**218**	**203**	**181**
HHV Net Plant Efficiency, %	52.8%	51.9%	52.0%	52.2%	52.2%	52.0%	51.8%	51.3%	50.8%	50.1%	49.2%	47.3%
HHV Net Plant Heat Rate, kJ/kWh (Btu/kWh)	6,817 (6,461)	6,938 (6,576)	6,920 (6,559)	6,902 (6,542)	6,901 (6,541)	6,916 (6,556)	6,955 (6,592)	7,011 (6,645)	7,092 (6,722)	7,192 (6,816)	7,323 (6,940)	7,614 (7,217)
HHV Combustion Turbine Efficiency, %	34.8%	34.6%	35.0%	34.9%	34.5%	33.9%	33.2%	32.5%	31.6%	30.6%	29.2%	26.3%
LHV Net Plant Efficiency, %	58.5%	57.5%	57.6%	57.8%	57.8%	57.7%	57.3%	56.9%	56.2%	55.5%	54.5%	52.4%
LHV Net Plant Heat Rate, kJ/kWh (Btu/kWh)	6,153 (5,832)	6,262 (5,935)	6,246 (5,920)	6,230 (5,905)	6,229 (5,904)	6,243 (5,917)	6,278 (5,950)	6,328 (5,998)	6,401 (6,067)	6,491 (6,153)	6,609 (6,264)	6,873 (6,514)
LHV Combustion Turbine Efficiency, %	38.6%	38.3%	38.7%	38.6%	38.2%	37.6%	36.8%	36.0%	35.1%	34.0%	32.4%	29.1%
Steam Turbine Cycle Efficiency, %	37.9%	37.3%	37.1%	37.1%	37.2%	37.4%	37.6%	37.7%	37.7%	37.6%	37.5%	37.2%
Steam Turbine Heat Rate, kJ/kWh (Btu/kWh)	9,493 (8,998)	9,654 (9,150)	9,716 (9,209)	9,707 (9,201)	9,674 (9,169)	9,622 (9,120)	9,573 (9,074)	9,545 (9,047)	9,551 (9,052)	9,576 (9,077)	9,603 (9,102)	9,678 (9,173)
Condenser Duty, GJ/hr (MMBtu/hr)	750 (710)	708 (671)	659 (624)	631 (598)	610 (578)	590 (560)	569 (539)	547 (518)	525 (497)	507 (481)	496 (470)	490 (464)
Natural Gas Feed Flow, kg/hr (lb/hr)	48,052 (105,936)	45,982 (101,373)	42,976 (94,746)	40,820 (89,992)	38,831 (85,608)	37,000 (81,571)	35,166 (77,527)	33,404 (73,642)	31,639 (69,752)	30,035 (66,215)	28,475 (62,777)	26,390 (58,179)
HHV Thermal Input, kWt	698,017	667,950	624,284	592,962	564,076	537,471	510,829	485,232	459,599	436,293	413,640	383,344
LHV Thermal Input, kWt	630,029	602,891	563,478	535,207	509,135	485,121	461,074	437,970	414,833	393,798	373,351	346,006
Raw Water Withdrawal, (m^3/min)/MWnet (gpm/MWnet)	0.00 (0.02)	0.00 (0.02)	0.00 (0.02)	0.00 (0.02)	0.00 (0.02)	0.00 (0.02)	0.00 (0.02)	0.00 (0.02)	0.00 (0.02)	0.00 (0.02)	0.00 (0.02)	0.00 (0.03)
Raw Water Consumption, (m^3/min)/MWnet (gpm/MWnet)	0.00 (0.00)	0.00 (0.00)	0.00 (0.00)	0.00 (0.00)	0.00 (0.00)	0.00 (0.00)	0.00 (0.00)	0.00 (0.00)	0.00 (0.00)	0.00 (0.00)	0.00 (0.00)	0.00 (0.00)

Exhibit 3-103. Case CC1A-F part load plant power summary

Power Summary												
Percent Load, % of CTG Gross Output	**100%**	**95%**	**90%**	**85%**	**80%**	**75%**	**70%**	**65%**	**60%**	**55%**	**50%**	**41%**
Combustion Turbine Power, MWe	243	231	218	207	195	182	170	158	145	134	121	101
Steam Turbine Power, MWe	132	121	112	107	104	102	99	96	92	88	86	84
Total Gross Power, MWe	**375**	**352**	**330**	**314**	**299**	**284**	**269**	**253**	**237**	**222**	**207**	**185**
Nameplate Capacity, MWe	**375**	**375**	**375**	**375**	**375**	**375**	**375**	**375**	**375**	**375**	**375**	**375**
Auxiliary Load Summary												
Air Cooled Condenser Fans	2,244	2,112	1,958	1,872	1,807	1,745	1,598	1,473	1,360	1,272	1,207	1,150
Ancillary Glycol Cooling Loops, kWe	45	45	45	45	45	45	45	45	45	45	45	45
Attemperating Air Fan, kWe	–	–	–	–	–	–	–	–	–	–	–	–
Combustion Turbine Auxiliaries, kWe	525	525	525	525	525	525	525	525	525	525	525	525
Combustion Turbine Water Injection Pump, kWe	–	–	–	–	–	–	–	–	–	–	–	–
Condensate Pumps, kWe	70	70	60	60	50	50	40	40	40	30	30	30
Feedwater Pumps, kWe	1,900	1,640	1,390	1,260	1,170	1,110	1,060	1,000	930	880	830	780
Ground Water Pumps, kWe	–	–	–	–	–	–	–	–	–	–	–	–
Miscellaneous Balance of Plant,[A] kWe	187	176	164	157	149	142	134	126	118	111	103	92
Natural Gas Compression, kWe	–	–	–	–	–	–	–	–	–	–	–	–
SCR, kWe	3	3	3	3	3	3	3	3	2	2	2	2
Steam Turbine Auxiliaries, kWe	69	69	69	69	69	69	69	69	69	69	69	69
Transformer Losses, kWe	1,140	1,070	1,000	950	910	860	820	770	720	670	630	560
Total Auxiliaries, MWe	**6**	**6**	**5**	**5**	**5**	**5**	**4**	**4**	**4**	**4**	**3**	**3**
Net Power, MWe	**369**	**347**	**325**	**309**	**294**	**280**	**264**	**249**	**233**	**218**	**203**	**181**

[A]Includes plant control systems, lighting, HVAC, and miscellaneous low voltage loads

Exhibit 3-104. Case CC1A-F part load air emissions summary

Emissions Summary												
Percent Load, % of CTG Gross Output	**100%**	**95%**	**90%**	**85%**	**80%**	**75%**	**70%**	**65%**	**60%**	**55%**	**50%**	**41%**
SO_2, kg/MWh-gross (lb/MWh-gross)	0.003 (0.006)	0.003 (0.006)	0.003 (0.006)	0.003 (0.006)	0.003 (0.006)	0.003 (0.006)	0.003 (0.006)	0.003 (0.006)	0.003 (0.006)	0.003 (0.006)	0.003 (0.006)	0.003 (0.006)
NOx, kg/MWh-gross (lb/MWh-gross)	0.012 (0.027)	0.012 (0.028)	0.012 (0.027)	0.012 (0.027)	0.012 (0.027)	0.012 (0.027)	0.013 (0.028)	0.013 (0.028)	0.013 (0.028)	0.013 (0.029)	0.013 (0.029)	0.014 (0.030)
Particulate, kg/MWh-gross (lb/MWh-gross)	0.009 (0.019)	0.009 (0.021)	0.010 (0.022)	0.010 (0.023)	0.011 (0.024)	0.011 (0.025)	0.012 (0.027)	0.013 (0.029)	0.014 (0.030)	0.015 (0.032)	0.016 (0.035)	0.018 (0.039)
Hg, kg/MWh-gross (lb/MWh-gross)	0.000 (0.000)	0.000 (0.000)	0.000 (0.000)	0.000 (0.000)	0.000 (0.000)	0.000 (0.000)	0.000 (0.000)	0.000 (0.000)	0.000 (0.000)	0.000 (0.000)	0.000 (0.000)	0.000 (0.000)
VOC, kg/MWh-gross (lb/MWh-gross)	0.005 (0.011)	0.005 (0.011)	0.005 (0.011)	0.005 (0.011)	0.005 (0.011)	0.005 (0.011)	0.005 (0.011)	0.005 (0.012)	0.005 (0.012)	0.005 (0.012)	0.005 (0.012)	0.006 (0.013)
CO, kg/MWh-gross (lb/MWh-gross)	0.006 (0.014)	0.006 (0.014)	0.006 (0.014)	0.006 (0.014)	0.006 (0.014)	0.006 (0.014)	0.006 (0.014)	0.007 (0.014)	0.007 (0.015)	0.007 (0.015)	0.007 (0.015)	0.007 (0.016)
CO_2, kg/MWh-gross (lb/MWh-gross)	342 (754)	348 (768)	347 (766)	347 (764)	346 (764)	347 (765)	349 (770)	352 (776)	356 (785)	361 (796)	367 (810)	382 (842)
CO_2, kg/MWh-net (lb/MWh-net)	348 (766)	354 (780)	353 (778)	352 (776)	352 (776)	353 (778)	355 (782)	358 (788)	362 (798)	367 (809)	374 (824)	389 (857)

All emissions are maintained at or below the environmental target emission limits across the entire load range.

Exhibit 3-105 displays the Case CC1A-F itemized efficiencies (HHV net plant efficiency, HHV CT efficiency, and ST cycle efficiency) and normalized auxiliary power consumption across the load range.

Exhibit 3-105. Case CC1A-F part load itemized efficiencies

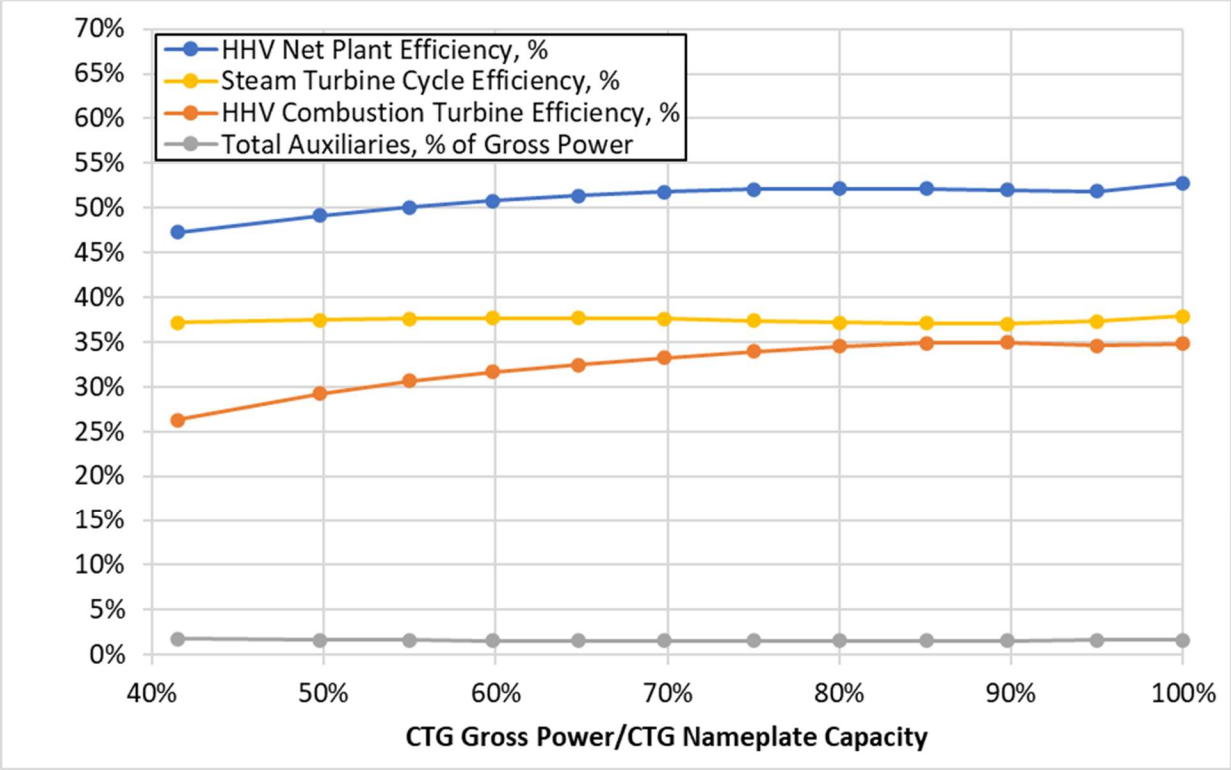

The decrease in part load net plant efficiency is primarily attributable to a decrease in the part load CT efficiency. The initial dip in the CT efficiency is the result of the turbine operation being limited by exhaust speed at base load. As parts of the turbine are undersized compared to the advanced compressor capability, the airflow through the IGVs is limited. From full load to approximately 90 percent load, the firing temperature is derated to control exhaust speed, which reduces the exhaust temperature. From approximately 90 percent load to approximately 60 percent load, the unit is primarily part loaded by closing the IGVs, which increases the exhaust temperature up to the limit of 1215°F. Below approximately 55 percent load, the IGVs are closed and the firing temperature is derated to maintain the exhaust temperature at 1215°F. The impact on net plant efficiency resulting from the increase in the normalized auxiliary power consumption is minor.

3.5.6 Case CC1A-F – Major Equipment List

Case CC1A-F – Account 3: Feedwater and Miscellaneous Balance of Plant Systems

Equipment No.	Description	Type	Design Condition	Operating Qty.	Spares
1	Demineralized Water Storage Tank	Vertical, cylindrical, outdoor	172,000 liters (45,000 gal)	2	0
2	Condensate Pumps	Vertical canned	6,190 lpm @ 70 m H_2O (1,630 gpm @ 240 ft H_2O)	1	1
3	Boiler Feedwater Pump	Horizontal, split case, multi-stage, centrifugal, with interstage bleed for IP and LP feedwater	HP water: 4,990 lpm @ 2,100 m H_2O (1,320 gpm @ 6,900 ft H_2O) IP water: 1,010 lpm @ 430 m H_2O (270 gpm @ 1,420 ft H_2O)	2	2
4	Auxiliary Boiler	Shop fabricated, water tube	18,000 kg/hr, 2.8 MPa, 343°C (40,000 lb/hr, 400 psig, 650°F)	1	0
5	Service Air Compressors	Flooded Screw	13 m^3/min @ 0.7 MPa (450 scfm @ 100 psig)	2	1
6	Instrument Air Dryers	Duplex, regenerative	13 m^3/min (450 scfm)	2	1
9	Engine-Driven Fire Pump	Vertical turbine, diesel engine	3,785 lpm @ 110 m H_2O (1,000 gpm @ 350 ft H_2O)	1	1
10	Fire Service Booster Pump	Two-stage horizontal centrifugal	2,650 lpm @ 80 m H_2O (700 gpm @ 250 ft H_2O)	1	1
11	Raw Water Pumps	Stainless steel, single suction	150 lpm @ 20 m H_2O (40 gpm @ 60 ft H_2O)	2	1
12	Filtered Water Pumps	Stainless steel, single suction	150 lpm @ 50 m H_2O (40 gpm @ 160 ft H_2O)	2	1
13	Filtered Water Tank	Vertical, cylindrical	145,000 liter (38,000 gal)	1	0
14	Makeup Water Demineralizer	Multi-media filter, cartridge filter, RO membrane assembly and electro-deionization unit	330 lpm (90 gpm)	1	0
15	Liquid Waste Treatment System	–	10 years, 24-hour storm	1	0
16	Gas Pipeline	Underground, coated carbon steel, wrapped cathodic protection	40 m^3/min @ 3.0 MPa (1,407 acfm @ 430 psia) 39 cm (16 in) standard wall pipe	16 km (10 mile)	0
17	Gas Metering Station	–	40 m^3/min (1,407 acfm)	1	0

Case CC1A-F – Account 6: Combustion Turbine and Accessories

Equipment No.	Description	Type	Design Condition	Operating Qty.	Spares
1	Combustion Turbine	Advanced F class w/ dry low-NOx burner	240 MW	1	0
2	Combustion Turbine Generator	Hydrogen Cooled	280 MVA @ 0.85 p.f., 18 kV, 60 Hz, 3-phase	1	0

Case CC1A-F – Account 7: HRSG, Ductwork, and Stack

Equipment No.	Description	Type	Design Condition	Operating Qty.	Spares
1	Stack	CS plate, type 409SS liner	46 m (150 ft) high x 5.6 m (18 ft) diameter	1	0

Equipment No.	Description	Type	Design Condition	Operating Qty.	Spares
2	Heat Recovery Steam Generator	Drum, multi-pressure with economizer section	Main steam - 297,116 kg/hr, 16.4 MPa/585°C (655,029 lb/hr, 2,379 psig/1,085°F) Reheat steam - 313,012 kg/hr, 3.5 MPa/585°C (690,071 lb/hr, 501 psig/1,085°F)	1	0
3	CO Catalyst	–	2,150,000 kg/hr (4,730,000 lb/hr)	1	0
4	SCR Reactor	–	2,150,000 kg/hr (4,730,000 lb/hr)	1	0
5	SCR Catalyst	–	Space available for an additional catalyst layer	1 layer	0
6	Dilution Air Blowers	Centrifugal	17 m^3/min @ 108 cm WG (600 scfm @ 42 in WG)	1	1
7	Ammonia Feed Pump	Centrifugal	3.5 lpm @ 90 m H_2O (0.9 gpm @ 300 ft H_2O)	1	1
8	Ammonia Storage Tank	Horizontal tank	51,000 liter (14,000 gal)	1	0

Case CC1A-F – Account 8: Steam Turbine and Accessories

Equipment No.	Description	Type	Design Condition	Operating Qty.	Spares
1	Steam Turbine	Commercially available advanced steam turbine	139 MW 16.4 MPa/585°C/585°C (2379 psig/ 1085°F/1085.126°F)	1	0
2	Steam Turbine Generator	Hydrogen cooled, static excitation	160 MVA @ 0.85 p.f., 18 kV, 60 Hz, 3-phase	1	0
3	Air-cooled Condenser	Forced draft, direct, A-frame air-cooled condenser	820 GJ/hr (780 MMBtu/hr), Condensing temperature 46°C (115°F), Ambient temperature 15°C (59°F)	1	0
4	Steam Bypass	One per HRSG	50% steam flow @ design steam conditions	1	0

Case CC1A-F – Account 9: Cooling Water System

Equipment No.	Description	Type	Design Condition	Operating Qty.	Spares
1	Glycol Cooling Loops	Industrial grade, air to glycol, closed loop heat exchanger	3 GJ/hr (2 MMBtu/hr) heat duty	5	0

Case CC1A-F – Account 11: Accessory Electric Plant

Equipment No.	Description	Type	Design Condition	Operating Qty.	Spares
1	CTG Transformer	Oil-filled	18 kV/345 kV, 280 MVA, 3-ph, 60 Hz	1	0
2	STG Transformer	Oil-filled	18 kV/345 kV, 160 MVA, 3-ph, 60 Hz	1	0
3	Medium Voltage Transformer	Oil-filled	18 kV/4.16 kV, 5 MVA, 3-ph, 60 Hz	1	1
4	Low Voltage Transformer	Dry ventilated	4.16 kV/480 V, 1 MVA, 3-ph, 60 Hz	1	1
5	CTG Isolated Phase Bus Duct and Tap Bus	Aluminum, self-cooled	18 kV, 3-ph, 60 Hz	1	0

Equipment No.	Description	Type	Design Condition	Operating Qty.	Spares
6	STG Isolated Phase Bus Duct and Tap Bus	Aluminum, self-cooled	18 kV, 3-ph, 60 Hz	1	0
7	Medium Voltage Switchgear	Metal clad	4.16 kV, 3-ph, 60 Hz	1	1
8	Low Voltage Switchgear	Metal enclosed	480 V, 3-ph, 60 Hz	1	1
9	Emergency Diesel Generator	Sized for emergency shutdown	750 kW, 480 V, 3-ph, 60 Hz	1	0

Case CC1A-F – Account 12: Instrumentation and Control

Equipment No.	Description	Type	Design Condition	Operating Qty.	Spares
1	DCS - Main Control	Monitor/keyboard; Operator printer (laser color); Engineering printer (laser B&W)	Operator stations/printers and engineering stations/printers	1	0
2	DCS - Processor	Microprocessor with redundant input/output	N/A	1	0
3	DCS - Data Highway	Fiber optic	Fully redundant, 25% spare	1	0

3.5.7 Case CC1A-F – Cost Estimating

The cost estimating method was described previously in Section 2.8. Exhibit 3-106 shows a detailed breakdown of the capital costs; Exhibit 3-107 shows the owner's costs, along with the TOC; Exhibit 3-108 shows the initial and annual O&M costs; and Exhibit 3-109 and Exhibit 3-110 show the startup and shutdown costs.

The estimated TPC of Case CC1A-F is $317 million. The project contingency is 13.7 percent of the TPC.

Exhibit 3-106. Case CC1A-F total plant cost details

Case:		CC1A-F	– NGCC F-Class (1x1)				Estimate Type:			Conceptual
							Cost Base:			Dec 2018
Item No.	Description	Equipment Cost	Material Cost	Labor		Bare Erected Cost	Eng'g CM H.O.& Fee	Contingencies		Total Plant Cost
				Direct	Indirect			Process	Project	$/1,000
3		Feedwater & Miscellaneous BOP Systems								
3.1	Feedwater System	$1,113	$1,909	$954	$0	$3,977	$795	$0	$716	$5,488
3.2	Water Makeup & Pretreating	$981	$98	$556	$0	$1,635	$327	$0	$393	$2,355
3.3	Other Feedwater Subsystems	$632	$207	$197	$0	$1,037	$207	$0	$187	$1,431
3.4	Service Water Systems	$703	$1,342	$4,346	$0	$6,392	$1,278	$0	$1,534	$9,204
3.5	Other Boiler Plant Systems	$151	$55	$137	$0	$343	$69	$0	$62	$473
3.6	Natural Gas Pipeline and Start-Up System	$5,740	$247	$185	$0	$6,172	$1,234	$0	$1,111	$8,517
3.7	Waste Water Treatment Equipment	$173	$0	$106	$0	$279	$56	$0	$67	$401
3.9	Miscellaneous Plant Equipment	$9,308	$1,221	$4,730	$0	$15,260	$3,052	$0	$3,662	$21,974
3.10	Miscellaneous Fast Start Plant Equipment	$950	$0	$633	$0	$1,583	$317	$0	$285	$2,185
	SUBTOTAL 3	**$19,752**	**$5,079**	**$11,846**	**$0**	**$36,677**	**$7,335**	**$0**	**$8,016**	**$52,028**
6		Combustion Turbine & Accessories								
6.1	Combustion Turbine Generator	$35,078	$0	$2,135	$0	$37,212	$7,442	$0	$6,698	$51,353
6.3	Combustion Turbine Accessories	$1,651	$0	$100	$0	$1,751	$350	$0	$315	$2,417
6.4	Compressed Air Piping	$0	$545	$123	$0	$668	$134	$0	$120	$922
6.5	Combustion Turbine Foundations	$0	$565	$610	$0	$1,175	$235	$0	$282	$1,692
	SUBTOTAL 6	**$36,728**	**$1,110**	**$2,969**	**$0**	**$40,807**	**$8,161**	**$0**	**$7,416**	**$56,384**
7		Ductwork & Stack								
7.1	Heat Recovery Steam Generator	$24,359	$0	$6,090	$0	$30,448	$6,090	$0	$5,481	$42,019
7.2	Heat Recovery Steam Generator Accessories	$9,950	$0	$1,841	$0	$11,791	$2,358	$0	$2,122	$16,272
7.3	Ductwork	$0	$624	$433	$0	$1,057	$211	$0	$190	$1,458
7.4	Stack	$2,765	$0	$512	$0	$3,277	$655	$0	$590	$4,522
7.5	Heat Recovery Steam Generator, Ductwork & Stack Foundations	$0	$465	$436	$0	$901	$180	$0	$216	$1,298
7.6	Selective Catalytic Reduction System	$896	$377	$525	$0	$1,798	$360	$0	$324	$2,482
7.7	Carbon Monoxide Reduction System	$0	$117	$78	$0	$195	$39	$0	$35	$269
	SUBTOTAL 7	**$37,970**	**$1,582**	**$9,915**	**$0**	**$49,467**	**$9,893**	**$0**	**$8,958**	**$68,319**
8		Steam Turbine & Accessories								
8.1	Steam Turbine Generator & Accessories	$21,324	$0	$3,123	$0	$24,447	$4,889	$0	$4,400	$33,737
8.2	Steam Turbine Plant Auxiliaries	$88	$0	$201	$0	$289	$58	$0	$52	$399
8.3	Condenser & Auxiliaries[A]	$10,192	$0	$4,890	$0	$15,082	$3,016	$0	$2,715	$20,814
8.4	Steam Piping	$4,800	$0	$1,945	$0	$6,745	$1,349	$0	$1,214	$9,308
8.5	Turbine Generator Foundations	$0	$756	$1,249	$0	$2,005	$401	$0	$481	$2,887
8.6	Fast Start Stress Monitoring System	$526	$0	$225	$0	$751	$150	$0	$135	$1,037
	SUBTOTAL 8	**$36,930**	**$756**	**$11,633**	**$0**	**$49,319**	**$9,864**	**$0**	**$8,998**	**$68,181**
9		Cooling Water System								
9.6	Component Cooling Water System[B]	$225	$0	$172	$0	$397	$79	$0	$71	$548
	SUBTOTAL 9	**$225**	**$0**	**$172**	**$0**	**$397**	**$79**	**$0**	**$71**	**$548**
11		Accessory Electric Plant								

Case:		CC1A-F	– NGCC F-Class (1x1)				Estimate Type:			Conceptual
							Cost Base:			Dec 2018
Item No.	Description	Equipment Cost	Material Cost	Labor		Bare Erected Cost	Eng'g CM H.O.& Fee	Contingencies		Total Plant Cost
				Direct	Indirect			Process	Project	$/1,000
11.1	Generator Equipment	$1,726	$0	$1,302	$0	$3,028	$606	$0	$545	$4,179
11.2	Station Service Equipment	$1,781	$0	$153	$0	$1,933	$387	$0	$348	$2,668
11.3	Switchgear & Motor Control	$2,542	$0	$441	$0	$2,983	$597	$0	$537	$4,117
11.4	Conduit & Cable Tray	$0	$614	$1,770	$0	$2,385	$477	$0	$429	$3,291
11.5	Wire & Cable	$0	$917	$1,639	$0	$2,557	$511	$0	$460	$3,528
11.6	Protective Equipment	$60	$0	$209	$0	$269	$54	$0	$48	$371
11.7	Standby Equipment	$470	$0	$434	$0	$904	$181	$0	$163	$1,248
11.8	Main Power Transformers	$4,272	$0	$87	$0	$4,359	$872	$0	$785	$6,015
11.9	Electrical Foundations	$0	$58	$148	$0	$206	$41	$0	$50	$297
	SUBTOTAL 11	**$10,851**	**$1,590**	**$6,184**	**$0**	**$18,625**	**$3,725**	**$0**	**$3,365**	**$25,714**
12		**Instrumentation & Control**								
12.1	Natural Gas Combined Cycle Control Equipment	$134	$0	$85	$0	$220	$44	$0	$40	$303
12.2	Combustion Turbine Control Equipment	$258	$0	$164	$0	$421	$84	$0	$76	$582
12.3	Steam Turbine Control Equipment	$215	$0	$137	$0	$352	$70	$0	$63	$486
12.4	Other Major Component Control Equipment	$361	$0	$230	$0	$591	$118	$0	$106	$815
12.5	Signal Processing Equipment	$301	$0	$9	$0	$310	$62	$0	$56	$428
12.6	Control Boards, Panels & Racks	$80	$0	$49	$0	$128	$26	$0	$23	$177
12.7	Distributed Control System Equipment	$4,421	$0	$135	$0	$4,556	$911	$0	$820	$6,287
12.8	Instrument Wiring & Tubing	$365	$292	$1,168	$0	$1,825	$365	$0	$328	$2,518
12.9	Other Instrumentation & Controls Equipment	$253	$0	$585	$0	$838	$168	$0	$151	$1,157
	SUBTOTAL 12	**$6,387**	**$292**	**$2,562**	**$0**	**$9,241**	**$1,848**	**$0**	**$1,663**	**$12,752**
13		**Improvements to Site**								
13.1	Site Preparation	$0	$415	$8,802	$0	$9,217	$1,843	$0	$2,212	$13,272
13.2	Site Improvements	$0	$1,334	$1,761	$0	$3,095	$619	$0	$743	$4,457
13.3	Site Facilities	$1,280	$0	$1,343	$0	$2,622	$524	$0	$629	$3,776
	SUBTOTAL 13	**$1,280**	**$1,749**	**$11,906**	**$0**	**$14,934**	**$2,987**	**$0**	**$3,584**	**$21,506**
14		**Buildings & Structures**								
14.1	Combustion Turbine Area	$0	$242	$128	$0	$370	$74	$0	$67	$510
14.3	Steam Turbine Building	$0	$2,303	$3,063	$0	$5,366	$1,073	$0	$966	$7,405
14.4	Administration Building	$0	$292	$198	$0	$490	$98	$0	$88	$676
14.6	Water Treatment Buildings	$0	$155	$141	$0	$295	$59	$0	$53	$408
14.7	Machine Shop	$0	$436	$279	$0	$715	$143	$0	$129	$987
14.8	Warehouse	$0	$340	$205	$0	$545	$109	$0	$98	$752
14.9	Other Buildings & Structures	$0	$248	$180	$0	$429	$86	$0	$77	$592
14.10	Waste Treating Building & Structures	$0	$25	$45	$0	$69	$14	$0	$13	$96
	SUBTOTAL 14	**$0**	**$4,041**	**$4,239**	**$0**	**$8,279**	**$1,656**	**$0**	**$1,490**	**$11,426**
	TOTAL	**$150,123**	**$16,198**	**$61,426**	**$0**	**$227,746**	**$45,549**	**$0**	**$43,562**	**$316,857**

[A]ACC; [B] Component cooling water system consists of a closed loop system and glycol-to-air heat exchangers. The system utilizes a 45 percent solution of glycol and water

Exhibit 3-107. Case CC1A-F owner's costs

Description	$/1,000
Pre-Production Costs	
6 Months All Labor	$2,601
1 Month Maintenance Materials	$354
1 Month Non-fuel Consumables	$65
1 Month Waste Disposal	$0
25% of 1 Months Fuel Cost at 100% CF	$1,921
2% of TPC	$6,337
Total	**$11,279**
Inventory Capital	
60-day supply of consumables at 100% CF	$129
0.5% of TPC (spare parts)	$1,584
Total	**$1,714**
Other Costs	
Initial Cost for Catalyst and Chemicals	$1,312
Land	$300
Other Owner's Costs	$47,529
Financing Costs	$8,555
Total Overnight Costs (TOC)	**$387,546**

Exhibit 3-108. Case CC1A-F initial and annual operating and maintenance costs

Case:	CC1A-F – NGCC F-Class (1x1)				Cost Base:	Dec 2018
Plant Size (MW, gross):	369		Heat Rate-net (Btu/kWh):		6,461	
Operating & Maintenance Labor						
Operating Labor				**Operating Labor Requirements per Shift**		
Operating Labor Rate (base):	38.50	$/hour		Skilled Operator:	1.0	
Operating Labor Burden:	30.00	% of base		Operator:	1.0	
Labor O-H Charge Rate:	25.00	% of labor		Foreman:	1.0	
				Lab Techs, etc.:	1.0	
				Total:	**4.0**	
Fixed Operating Costs						
						Annual Cost ($)
					Annual Operating Labor:	$1,753,752
					Maintenance Labor:	$2,408,116
					Administrative & Support Labor:	$1,040,467
					Property Taxes and Insurance:	$6,337,147
					Total:	**$11,539,481**
Variable Operating Costs						
						Annual Cost ($)
					Maintenance Material:	$4,249,616 x CF
Consumables						
	Initial Fill	**Per Day**	**Per Unit**	**Initial Fill**	**Annual Cost ($)**	
Water (gal/1000):	0	4	$1.90	$0	$2,871 x CF	
Makeup and Waste Water Treatment Chemicals (ton):	0	0.012	$550.00	$0	$2,475 x CF	
Ammonia (19 wt%, ton):	0	4.7	$300.00	$0	$512,025 x CF	
SCR Catalyst (ft^3):	2,807	1.54	$150.00	$421,095	$84,219 x CF	
CO Catalyst (ft^3):	223	0.12	$4,000.00	$891,044	$178,209 x CF	
Subtotal:				**$1,312,139**	**$779,799 x CF**	
Waste Disposal						
SCR Catalyst (ft^3):	0	1.54	$2.50	$0	$1,404 x CF	
CO Catalyst (ft^3):	0	0.12	$2.50	$0	$111 x CF	
Subtotal:				**$0**	**$1,515 x CF**	
				Variable Operating Costs Total:	**$1,312,139**	**$5,030,930 x CF**
Fuel Cost						
Natural Gas (MMBtu):	0	57,162	$4.42	$0	$92,218,755 x CF	
				Fuel Costs Total:	**$0**	**$92,218,755 x CF**

Exhibit 3-109. Case CC1A-F synchronization startup and shutdown costs

Event to Synchronization		Hot Start	Warm Start	Cold Start	Shutdown
Energy and Duration					
Energy Produced	MWh	-	-	-	-
Duration	min	5	5	5	58
NG Heat Input (HHV)	MMBtu	170	170	170	20
House Energy Consumed	MWh	0.4	0.4	0.4	0.0
Aux Boiler Heat Input (HHV)	MMBtu	-	100	200	-
Costs					
Energy Sold Cost	$	-	-	-	-
Variable O&M Cost	$	40	40	40	-
Natural Gas Cost	$	750	1,190	1,640	90
House Energy Cost	$	20	20	20	-
Total Cost for Event	**$**	**810**	**1,250**	**1,700**	**90**

Exhibit 3-110. Case CC1A-F full load startup and shutdown costs

Event to Full Load		Hot Start	Warm Start	Cold Start	Shutdown
Energy and Duration					
Energy Produced	MWh	68.3	123.2	216.8	46.2
Duration	min	35	50	130	70
NG Heat Input (HHV)	MMBtu	954	1,663	4,402	412
House Energy Consumed	MWh	2.0	3.5	9.2	0.9
Aux Boiler Heat Input (HHV)	MMBtu	-	200	400	-
Costs					
Energy Sold Cost	$	(4,100)	(7,400)	(13,000)	(2,800)
Variable O&M Cost	$	200	400	900	100
Natural Gas Cost	$	4,200	8,200	21,200	1,800
House Energy Cost	$	100	200	600	100
Total Cost for Event	**$**	**400**	**1,400**	**9,700**	**(800)**

3.5.8 Case CC1A-H – Process Description

The process description for Case CC1A-H is the same as CC1A-F (see Section 3.5.3).

3.5.9 Case CC1A-H – Full Load Performance Results

The BFD for Case CC1A-H is shown in Exhibit 3-111. Steam tables that outline process data for the numbered streams in the BFD are provided in Exhibit 3-112. Full stream tables are only provided for the 100 percent load point.

Exhibit 3-111. Case CC1A-H BFD, NGCC

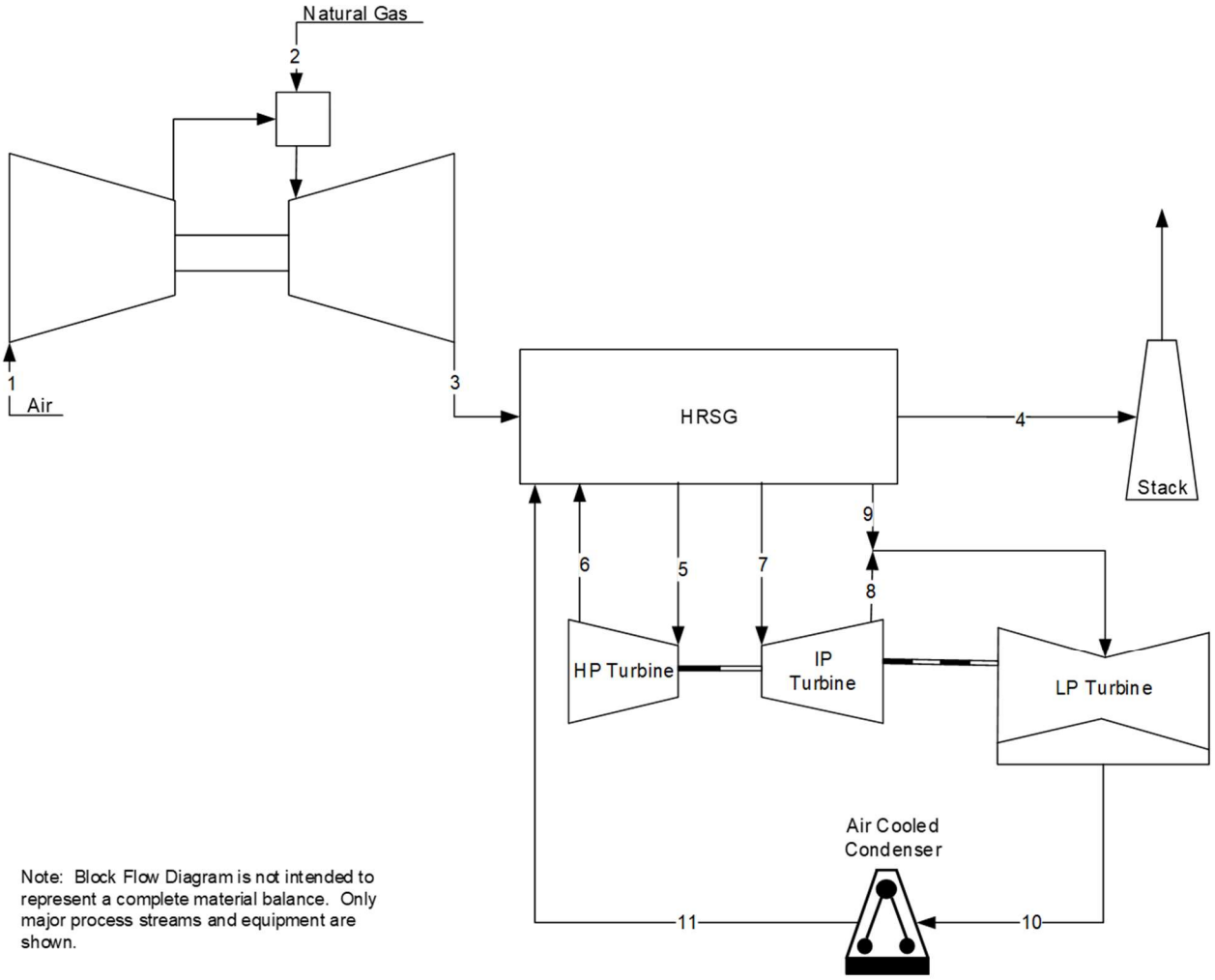

Exhibit 3-112. Case CC1A-H stream table, NGCC

	1	2	3	4	5	6	7	8	9	10	11
V-L Mole Fraction											
Ar	0.0092	0.0000	0.0088	0.0088	0.0000	0.0000	0.0000	0.0000	0.0000	0.0000	0.0000
CH_4	0.0000	0.9310	0.0000	0.0000	0.0000	0.0000	0.0000	0.0000	0.0000	0.0000	0.0000
CH_4S	0.0000	0.0000	0.0000	0.0000	0.0000	0.0000	0.0000	0.0000	0.0000	0.0000	0.0000
C_2H_6	0.0000	0.0320	0.0000	0.0000	0.0000	0.0000	0.0000	0.0000	0.0000	0.0000	0.0000
C_3H_8	0.0000	0.0070	0.0000	0.0000	0.0000	0.0000	0.0000	0.0000	0.0000	0.0000	0.0000
C_4H_{10}	0.0000	0.0040	0.0000	0.0000	0.0000	0.0000	0.0000	0.0000	0.0000	0.0000	0.0000
CO_2	0.0003	0.0100	0.0449	0.0449	0.0000	0.0000	0.0000	0.0000	0.0000	0.0000	0.0000
H_2O	0.0099	0.0000	0.0953	0.0953	1.0000	1.0000	1.0000	1.0000	1.0000	1.0000	1.0000
N_2	0.7732	0.0160	0.7398	0.7398	0.0000	0.0000	0.0000	0.0000	0.0000	0.0000	0.0000
O_2	0.2074	0.0000	0.1112	0.1112	0.0000	0.0000	0.0000	0.0000	0.0000	0.0000	0.0000
SO_2	0.0000	0.0000	0.0000	0.0000	0.0000	0.0000	0.0000	0.0000	0.0000	0.0000	0.0000
Total	1.0000	1.0000	1.0000	1.0000	1.0000	1.0000	1.0000	1.0000	1.0000	1.0000	1.0000
V-L Flowrate, kg_{mol}/hr	89,395	4,001	93,512	93,512	20,441	19,608	22,158	22,130	2,596	24,944	25,034
V-L Flowrate, kg/hr	2,579,658	69,329	2,648,987	2,648,987	368,242	353,251	399,192	398,675	46,763	449,380	450,986
Solids Flowrate, kg/hr	0	0	0	0	0	0	0	0	0	0	0
Temperature, °C	15	27	652	86	585	366	584	308	292	46	46
Pressure, MPa, abs	0.10	3.38	0.11	0.10	16.50	3.96	3.55	0.52	0.51	0.01	0.01
Steam Table Enthalpy, kJ/kg[A]	30.23	17.30	881.55	241.74	3,528.08	3,131.85	3,640.73	3,079.78	3,046.53	2,433.64	193.10
AspenPlus Enthalpy, kJ/kg[B]	-97.58	-4,491.92	-733.23	-1,373.04	-12,452.21	-12,848.44	-12,339.57	-12,900.51	-12,933.76	-13,546.66	-15,787.20
Density, kg/m^3	1.2	25.4	0.4	1.0	45.6	14.4	9.2	2.0	2.0	0.1	989.7
V-L Molecular, Weight	28.857	17.328	28.328	28.328	18.015	18.015	18.015	18.015	18.015	18.015	18.015
V-L Flowrate, lb_{mol}/hr	197,081	8,821	206,158	206,158	45,064	43,229	48,851	48,788	5,723	54,993	55,189
V-L Flowrate, lb/hr	5,687,172	152,844	5,840,016	5,840,016	811,836	778,785	880,067	878,928	103,095	990,713	994,254
Solids Flowrate, lb/hr	0	0	0	0	0	0	0	0	0	0	0
Temperature, °F	59	80	1,206	186	1,085	691	1,083	586	557	115	115
Pressure, psia	14.7	490.0	15.3	14.8	2,393.0	575.0	515.5	75.0	73.5	1.5	1.5
Steam Table Enthalpy, Btu/lb[A]	13.0	7.4	379.0	103.9	1,516.8	1,346.5	1,565.2	1,324.1	1,309.8	1,046.3	83.0
AspenPlus Enthalpy, Btu/lb[B]	-42.0	-1,931.2	-315.2	-590.3	-5,353.5	-5,523.8	-5,305.1	-5,546.2	-5,560.5	-5,824.0	-6,787.3
Density, lb/ft^3	0.076	1.588	0.024	0.060	2.849	0.900	0.571	0.122	0.123	0.005	61.784

[A]Steam table reference conditions are 32.02°F & 0.089 psia

[B]Aspen thermodynamic reference state is the component's constituent elements in an ideal gas state at 25°C and 1 atm

At full load, the plant produces a net output of 552 MW at a net plant efficiency of 54.8 percent (HHV basis). Full load performance for Case CC1A-H is summarized in Exhibit 3-113.
Exhibit 3-114 presents a detailed breakdown of the auxiliary power requirements at full load.

Exhibit 3-113. Case CC1A-H plant performance summary

Performance Summary	
Combustion Turbine Power, MWe	381
Steam Turbine Power, MWe	179
Total Gross Power, MWe	**560**
Nameplate Capacity, MWe	**560**
Balance of Plant, kWe	8,368
Total Auxiliaries, MWe	**8**
Net Power, MWe	**552**
HHV Net Plant Efficiency, %	54.8%
HHV Net Plant Heat Rate, kJ/kWh (Btu/kWh)	6,568 (6,225)
HHV Combustion Turbine Efficiency, %	37.9%
LHV Net Plant Efficiency, %	60.7%
LHV Net Plant Heat Rate, kJ/kWh (Btu/kWh)	5,928 (5,619)
LHV Combustion Turbine Efficiency, %	41.95%
Steam Turbine Cycle Efficiency, %	38.0%
Steam Turbine Heat Rate, kJ/kWh (Btu/kWh)	9,463 (8,969)
Condenser Duty, GJ/hr (MMBtu/hr)	1,010 (957)
Natural Gas Feed Flow, kg/hr (lb/hr)	69,329 (152,844)
HHV Thermal Input, kWt	1,007,095
LHV Thermal Input, kWt	909,003
Raw Water Withdrawal, $(m^3/min)/MW_{net}$ (gpm/MW_{net})	0.00 (0.01)
Raw Water Consumption, $(m^3/min)/MW_{net}$ (gpm/MW_{net})	0.00 (0.00)

Exhibit 3-114. Case CC1A-H plant power summary

Power Summary	
Combustion Turbine Power, MWe	381
Steam Turbine Power, MWe	179
Total Gross Power, MWe	**560**
Nameplate Total Capacity, MWe	**560**
Auxiliary Load Summary	
Air Cooled Condenser Fans	3,023
Ancillary Glycol Cooling Loops, kWe	67
Attemperating Air Fan, kWe	–
Combustion Turbine Auxiliaries, kWe	500
Combustion Turbine Water Injection Pump, kWe	–
Condensate Pumps, kWe	100
Feedwater Pumps, kWe	2,600
Ground Water Pumps, kWe	–
Miscellaneous Balance of Plant,[A] kWe	280
Natural Gas Compression, kWe	–
SCR, kWe	4
Steam Turbine Auxiliaries, kWe	95
Transformer Losses, kWe	1,700
Total Auxiliaries, MWe	**8**
Net Power, MWe	**552**

[A]Includes plant control systems, lighting, HVAC, and miscellaneous low voltage loads

3.5.9.1 Environmental Performance

The environmental targets for emissions of NOx, SO_2, and PM were presented in Section 2.3. A summary of the plant air emissions for Case CC1A-H is presented in Exhibit 3-115.

Exhibit 3-115. Case CC1A-H air emissions

	kg/GJ (lb/MMBtu)	tonne/year (ton/year)[A]	kg/MWh (lb/MWh)[B]
SO_2	0.000 (0.001)	13 (14)	0.003 (0.006)
NOx	0.0'02 (0.004)	58 (64)	0.012 (0.026)
Particulate	0.001 (0.003)	47 (52)	0.010 (0.021)
Hg	0.000 (0.000)	0 (0)	0.000 (0.000)
VOC	0.001 (0.002)	24 (27)	0.005 (0.011)
CO	0.001 (0.002)	30 (33)	0.006 (0.014)
CO_2	51 (119)	1,618,552 (1,784,148)	330 (727)
CO_2[C]	-	-	335 (738)

[A]Calculations based on a 100 percent capacity factor
[B]Emissions based on gross power except where otherwise noted
[C]CO_2 emissions based on net power instead of gross power

For the purpose of this report, the natural gas was assumed to contain the domestic average value of total sulfur of 0.34 gr/100 scf ($4.71x10^{-4}$ lb-S/MMBtu). [9] It was also assumed that the added CH_4S was the sole contributor of sulfur to the natural gas. No sulfur capture systems were required.

Uncontrolled NOx emissions from the CT is about 25 ppmvd at 15 percent O_2, which is achieved with a DLN burner in the CTG. An SCR unit then further reduces the NOx concentration to 1.8 ppmvd at 15 percent O_2. [17] [16]

The pipeline natural gas was assumed to contain no Hg or HCl, resulting in zero emissions.

The uncontrolled CO and VOC emissions from this CT are 6.2 ppmvd at 15 percent O_2 and 1.1 ppmvd at 15 percent O_2, respectively. A CO catalyst is used to control the CO emissions to 1.0 ppmvd at 15 percent O_2 and the VOC emissions target of 1.4 ppmvd at 15 percent O_2 does not require further reduction (though the CO catalyst will passively reduce VOC).

The production of PM is a result of system inefficiencies and is not produced or emitted in any significant amount.

CO_2 emissions represent the uncontrolled discharge from the process.

The carbon balance for the plant is shown in Exhibit 3-116. The carbon input to the plant consists of carbon in the natural gas and carbon in the air. Carbon leaves the plant as CO_2 through the stack.

Exhibit 3-116. Case CC1A-H carbon balance

Carbon In		Carbon Out	
	kg/hr (lb/hr)		kg/hr (lb/hr)
Natural Gas	50,075 (110,396)	Stack Gas	50,426 (111,170)
Air (CO_2)	351 (773)		
Total	**50,426 (111,170)**	**Total**	**50,426 (111,170)**

As shown in Exhibit 3-117, the sulfur content of the natural gas is insignificant. All sulfur in the natural gas is emitted in the stack gas.

Exhibit 3-117. Case CC1A-H sulfur balance

Sulfur In		Sulfur Out	
	kg/hr (lb/hr)		kg/hr (lb/hr)
Natural Gas	0.7 (1.6)	Stack Gas	0.7 (1.6)
Total	**0.7 (1.6)**	**Total**	**0.7 (1.6)**

Exhibit 3-118 shows the water balance for Case CC1A-H.

Exhibit 3-118. Case CC1A-H water balance

Water Use	Water Demand	Internal Recycle	Raw Water Withdrawal	Process Water Discharge	Raw Water Consumption
	m^3/min (gpm)	m^3/min (gpm)	m^3/min (gpm)	m^3/min (gpm)	m^3/min (gpm)
Steam Packing	–	–	–	0.0 (2.8)	0.0 (-2.8)
Deaerator Vent	–	–	–	0.0 (4.0)	0.0 (-4.0)
Condenser Makeup	**0.0 (6.8)**	**–**	**0.0 (6.8)**	**–**	**0.0 (6.8)**
BFW Makeup	0.0 (6.8)	–	0.0 (6.8)	–	0.0 (6.8)
Total	0.0 (6.8)	–	0.0 (6.8)	0.0 (6.8)	–

3.5.9.2 Energy and Mass Balance Diagrams

An energy and mass balance diagram is shown for Case CC1A-H in Exhibit 3-119.

An overall plant energy balance is provided in tabular form in Exhibit 3-120. The power out is the combined CT and ST power prior to generator losses. The power at the generator terminals (shown in Exhibit 3-113) is calculated by multiplying the power out by the generator efficiency: 98.6 percent for the CT, and 98.5 percent for the ST.

This page intentionally left blank

Exhibit 3-119. Case CC1A-H energy and mass balance, NGCC

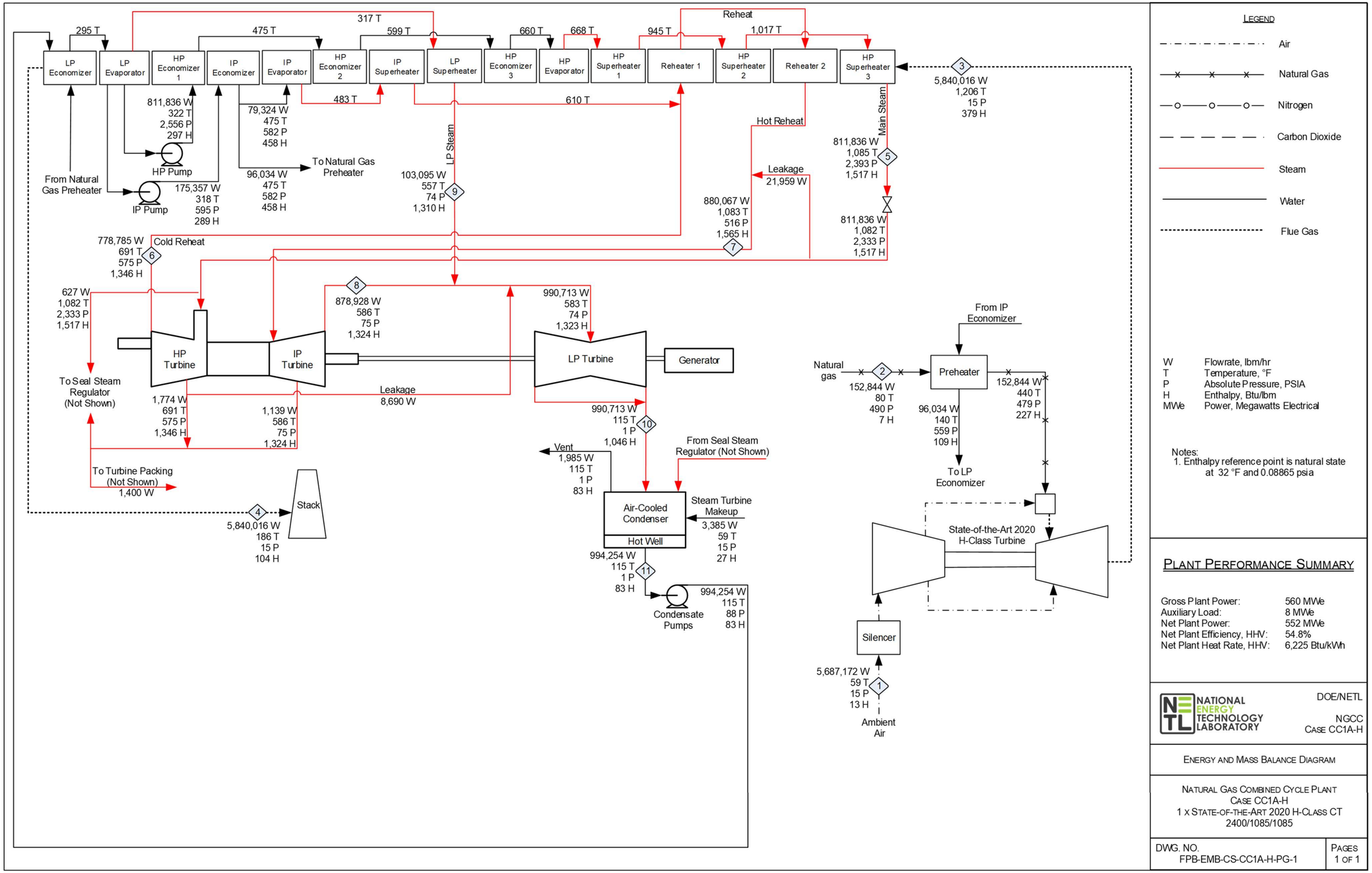

This page intentionally left blank

Exhibit 3-120. Case CC1A-H overall energy balance (0°C [32°F] reference)

	HHV	Sensible + Latent	Power	Total
Heat In GJ/hr (MMBtu/hr)				
Natural Gas	3,626 (3,436)	2.4 (2.3)	–	3,628 (3,439)
Air	–	78 (74)	–	78 (74)
Raw Water Makeup	–	0.1 (0.1)	–	0.1 (0.1)
Auxiliary Power	–	–	30 (29)	30 (29)
TOTAL	**3,626 (3,436)**	**80 (76)**	**30 (29)**	**3,736 (3,541)**
Heat Out GJ/hr (MMBtu/hr)				
Stack Gas	–	640 (607)	–	640 (607)
Sulfur	–	–	–	–
Motor Losses and Design Allowances	–	–	28 (27)	28 (27)
Cooling Load[A]	–	1,029 (976)	–	1,029 (976)
CO_2 Product Stream	–	–	–	–
Deaerator Vent	–	0.2 (0.2)	–	0.2 (0.2)
Ambient Losses[B]	–	*37 (35)*	–	37 (35)
Power	–	–	2,017 (1,912)	2,017 (1,912)
TOTAL	**–**	**1,707 (1,618)**	**2,046 (1,939)**	**3,752 (3,557)**
Unaccounted Energy[C]	**–**	*-16 (-15)*	–	*-16 (-15)*

[A]Includes condenser and miscellaneous cooling loads
[B]Ambient losses include all losses to the environment through radiation, convection, etc. Sources of these losses include the combustor, reheater, superheater, and transformers
[C]By difference

3.5.10 Case CC1A-H – Part Load Performance Results

Plant performance results are summarized at each discrete load point in Exhibit 3-121. Exhibit 3-122 displays a detailed breakdown of the auxiliary power requirement at each discrete load point. Air emissions at each discrete load point are summarized in Exhibit 3-123. The results presented in this section are reflective of steady-state operation. Performance associated with specific operating profiles (e.g., load-following, peaking) will differ.

Exhibit 3-121. Case CC1A-H part load plant performance summary

Performance Summary				
Percent Load, % of CTG Gross Output	**100%**	**75%**	**50%**	**30%**
Combustion Turbine Power, MWe	381	286	191	114
Steam Turbine Power, MWe	179	146	120	97
Total Gross Power, MWe	**560**	**432**	**310**	**211**
Nameplate Capacity, MWe	**560**	**560**	**560**	**560**
Total Auxiliaries, MWe	**8**	**6**	**5**	**3**
Total Auxiliaries, % of Gross Power	**1.5%**	**1.5%**	**1.5%**	**1.6%**
Net Power, MWe	**552**	**426**	**306**	**208**
HHV Net Plant Efficiency, %	54.8%	53.9%	51.0%	46.9%
HHV Net Plant Heat Rate, kJ/kWh (Btu/kWh)	6,568 (6,225)	6,676 (6,328)	7,057 (6,689)	7,679 (7,279)
HHV Combustion Turbine Efficiency, %	37.9%	36.2%	31.8%	25.8%
LHV Net Plant Efficiency, %	60.7%	59.7%	56.5%	51.9%
LHV Net Plant Heat Rate, kJ/kWh (Btu/kWh)	5,928 (5,619)	6,026 (5,711)	6,370 (6,038)	6,931 (6,570)
LHV Combustion Turbine Efficiency, %	41.9%	40.1%	35.2%	28.6%
Steam Turbine Cycle Efficiency, %	38.0%	37.9%	37.5%	36.8%
Steam Turbine Heat Rate, kJ/kWh (Btu/kWh)	9,463 (8,969)	9,503 (9,007)	9,610 (9,108)	9,790 (9,279)
Condenser Duty, GJ/hr (MMBtu/hr)	1,010 (957)	828 (785)	691 (655)	576 (546)
Natural Gas Feed Flow, kg/hr (lb/hr)	69,329 (152,844)	54,340 (119,800)	41,250 (90,941)	30,505 (67,252)
HHV Thermal Input, kWt	1,007,095	789,367	599,213	443,125
LHV Thermal Input, kWt	909,003	712,481	540,849	399,964
Raw Water Withdrawal, (m^3/min)/MWnet (gpm/MWnet)	0.00 (0.01)	0.00 (0.01)	0.00 (0.02)	0.00 (0.02)
Raw Water Consumption, (m^3/min)/MWnet (gpm/MWnet)	0.00 (0.00)	0.00 (0.00)	0.00 (0.00)	0.00 (0.00)

Exhibit 3-122. Case CC1A-H part load plant power summary

Power Summary				
Percent Load, % of CTG Gross Output	**100%**	**75%**	**50%**	**30%**
Combustion Turbine Power, MWe	381	286	191	114
Steam Turbine Power, MWe	179	146	120	97
Total Gross Power, MWe	**560**	**432**	**310**	**211**
Nameplate Capacity, MWe	**560**	**560**	**560**	**560**
Auxiliary Load Summary				
Air Cooled Condenser Fans	3,023	2,451	1,751	1,216
Ancillary Glycol Cooling Loops, kWe	67	67	67	67
Attemperating Air Fan, kWe	–	–	–	–
Combustion Turbine Auxiliaries, kWe	500	500	500	500
Combustion Turbine Water Injection Pump, kWe	–	–	–	–
Condensate Pumps, kWe	100	70	50	30
Feedwater Pumps, kWe	2,600	1,720	1,180	810
Ground Water Pumps, kWe	–	–	–	–
Miscellaneous Balance of Plant,[A] kWe	280	216	155	105
Natural Gas Compression, kWe	–	–	–	–
SCR, kWe	4	4	3	3
Steam Turbine Auxiliaries, kWe	95	95	95	95
Transformer Losses, kWe	1,700	1,310	940	640
Total Auxiliaries, MWe	**8**	**6**	**5**	**3**
Net Power, MWe	**552**	**426**	**306**	**208**

[A]Includes plant control systems, lighting, HVAC, and miscellaneous low voltage loads

Exhibit 3-123. Case CC1A-H part load air emissions summary

Emissions Summary				
Percent Load, % of CTG Gross Output	**100%**	**75%**	**50%**	**30%**
SO_2, kg/MWh-gross (lb/MWh-gross)	0.003 (0.006)	0.003 (0.006)	0.003 (0.006)	0.003 (0.007)
NOx, kg/MWh-gross (lb/MWh-gross)	0.012 (0.026)	0.012 (0.027)	0.013 (0.028)	0.014 (0.031)
Particulate, kg/MWh-gross (lb/MWh-gross)	0.010 (0.021)	0.012 (0.027)	0.017 (0.038)	0.025 (0.056)
Hg, kg/MWh-gross (lb/MWh-gross)	0.000 (0.000)	0.000 (0.000)	0.000 (0.000)	0.000 (0.000)
VOC, kg/MWh-gross (lb/MWh-gross)	0.005 (0.011)	0.005 (0.011)	0.005 (0.012)	0.006 (0.013)
CO, kg/MWh-gross (lb/MWh-gross)	0.006 (0.014)	0.006 (0.014)	0.007 (0.015)	0.007 (0.016)
CO_2, kg/MWh-gross (lb/MWh-gross)	330 (727)	335 (739)	354 (781)	385 (850)
CO_2, kg/MWh-net (lb/MWh-net)	335 (738)	340 (750)	360 (793)	392 (864)

All emissions are maintained at or below the environmental target emission limits across the entire load range.

Exhibit 3-124 displays the Case CC1A-H itemized efficiencies (HHV net plant efficiency, HHV CT efficiency, and ST cycle efficiency) and normalized auxiliary power consumption across the load range.

Exhibit 3-124. Case CC1A-H part load itemized efficiencies

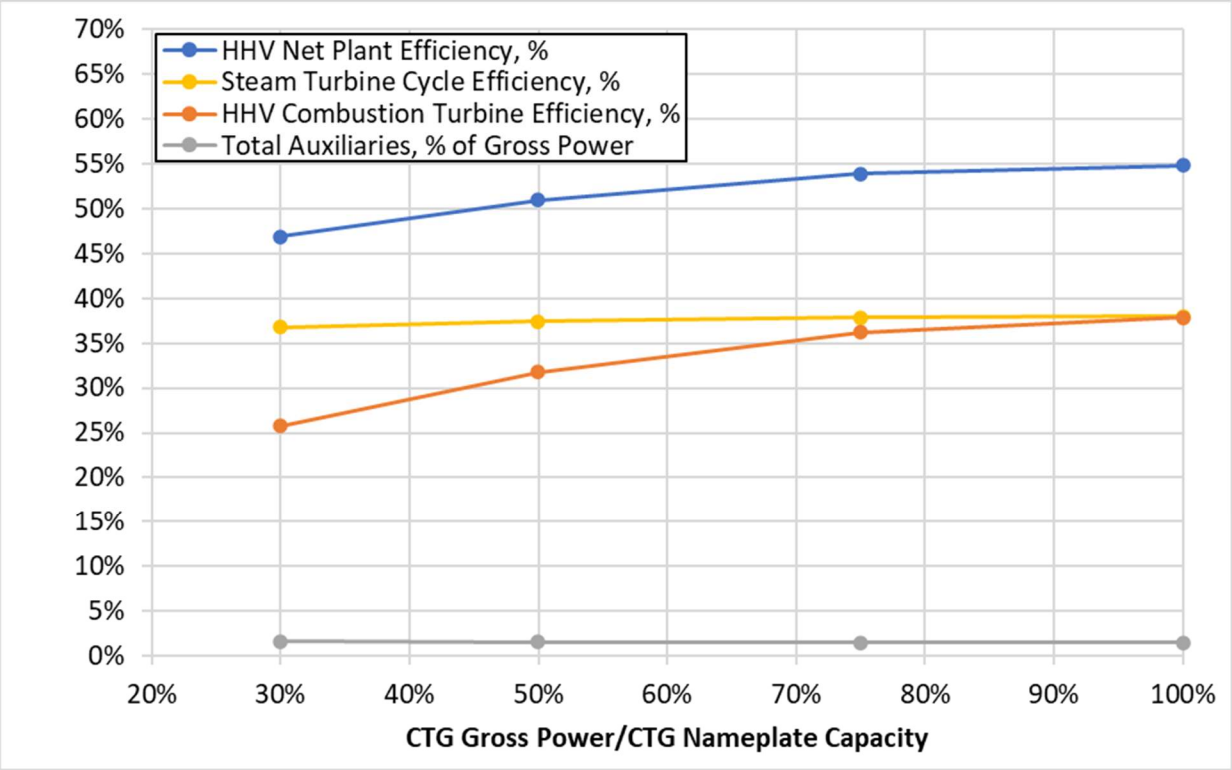

The decrease in part load net plant efficiency is primarily attributable to two key factors: 1) a decrease in the part load CT efficiency, and 2) a decrease in the ST cycle efficiency. The impact on net plant efficiency resulting from the increase in the normalized auxiliary power consumption is minor.

3.5.11 Case CC1A-H – Major Equipment List

Case CC1A-H – Account 3: Feedwater and Miscellaneous Balance of Plant Systems

Equipment No.	Description	Type	Design Condition	Operating Qty.	Spares
1	Demineralized Water Storage Tank	Vertical, cylindrical, outdoor	203,000 liters (54,000 gal)	2	0
2	Condensate Pumps	Vertical canned	8,330 lpm @ 70 m H_2O (2,200 gpm @ 240 ft H_2O)	1	1
3	Boiler Feedwater Pump	Horizontal, split case, multi-stage, centrifugal, with interstage bleed for IP and LP feedwater	HP water: 6,800 lpm @ 2,100 m H_2O (1,800 gpm @ 6,900 ft H_2O) IP water: 1,470 lpm @ 430 m H_2O (390 gpm @ 1,420 ft H_2O)	2	2
4	Auxiliary Boiler	Shop fabricated, water tube	18,000 kg/hr, 2.8 MPa, 343°C (40,000 lb/hr, 400 psig, 650°F)	1	0
5	Service Air Compressors	Flooded screw	13 m^3/min @ 0.7 MPa (450 scfm @ 100 psig)	2	1
6	Instrument Air Dryers	Duplex, regenerative	13 m^3/min (450 scfm)	2	1
9	Engine-Driven Fire Pump	Vertical turbine, diesel engine	3,785 lpm @ 110 m H_2O (1,000 gpm @ 350 ft H_2O)	1	1
10	Fire Service Booster Pump	Two-stage horizontal centrifugal	2,650 lpm @ 80 m H_2O (700 gpm @ 250 ft H_2O)	1	1
11	Raw Water Pumps	Stainless steel, single suction	150 lpm @ 20 m H_2O (40 gpm @ 60 ft H_2O)	2	1
12	Filtered Water Pumps	Stainless steel, single suction	150 lpm @ 50 m H_2O (40 gpm @ 160 ft H_2O)	2	1
13	Filtered Water Tank	Vertical, cylindrical	145,000 liter (38,000 gal)	1	0
14	Makeup Water Demineralizer	Multi-media filter, cartridge filter, RO membrane assembly and electro-deionization unit	330 lpm (90 gpm)	1	0
15	Liquid Waste Treatment System	–	10 years, 24-hour storm	1	0
16	Gas Pipeline	Underground, coated carbon steel, wrapped cathodic protection	50 m^3/min @ 3.4 MPa (1,765 acfm @ 490 psia) 39 cm (16 in) standard wall pipe	16 km (10 mile)	0
17	Gas Metering Station	–	50 m^3/min (1,765 acfm)	1	0

Case CC1A-H – Account 6: Combustion Turbine and Accessories

Equipment No.	Description	Type	Design Condition	Operating Qty.	Spares
1	Combustion Turbine	Advanced H class w/ dry low-NOx burner	380 MW	1	0
2	Combustion Turbine Generator	Hydrogen Cooled	450 MVA @ 0.85 p.f., 18 kV, 60 Hz, 3-phase	1	0

Case CC1A-H – Account 7: HRSG, Ductwork, and Stack

Equipment No.	Description	Type	Design Condition	Operating Qty.	Spares
1	Stack	CS plate, type 409SS liner	46 m (150 ft) high x 6.6 m (22 ft) diameter	1	0
2	Heat Recovery Steam Generator	Drum, multi-pressure with economizer section	Main steam - 405,067 kg/hr, 16.4 MPa/585°C (893,019 lb/hr, 2,378 psig/1,085°F) Reheat steam - 428,155 kg/hr, 3.5 MPa/585°C (943,919 lb/hr, 501 psig/1,085°F)	1	0
3	CO Catalyst	–	2,910,000 kg/hr (6,420,000 lb/hr)	1	0
4	SCR Reactor	–	2,910,000 kg/hr (6,420,000 lb/hr)	1	0
5	SCR Catalyst	–	Space available for an additional catalyst layer	1 layer	0
6	Dilution Air Blowers	Centrifugal	24 m^3/min @ 108 cm WG (860 scfm @ 42 in WG)	1	1
7	Ammonia Feed Pump	Centrifugal	5.1 lpm @ 90 m H_2O (1.4 gpm @ 300 ft H_2O)	1	1
8	Ammonia Storage Tank	Horizontal tank	74,000 liter (19,000 gal)	1	0

Case CC1A-H – Account 8: Steam Turbine and Accessories

Equipment No.	Description	Type	Design Condition	Operating Qty.	Spares
1	Steam Turbine	Commercially available advanced steam turbine	189 MW 16.4 MPa/585°C/585°C (2378 psig/ 1085°F/1084.9995°F)	1	0
2	Steam Turbine Generator	Hydrogen cooled, static excitation	220 MVA @ 0.85 p.f., 18 kV, 60 Hz, 3-phase	1	0
3	Air-cooled Condenser	Forced draft, direct, A-frame air-cooled condenser	1,110 GJ/hr (1,050 MMBtu/hr), Condensing temperature 46°C (115°F), Ambient temperature 15°C (59°F)	1	0
4	Steam Bypass	One per HRSG	50% steam flow @ design steam conditions	1	0

Case CC1A-H – Account 9: Cooling Water System

Equipment No.	Description	Type	Design Condition	Operating Qty.	Spares
1	Glycol Cooling Loops	Industrial grade, air to glycol, closed loop heat exchanger	4 GJ/hr (4 MMBtu/hr) heat duty	5	0

Case CC1A-H – Account 11: Accessory Electric Plant

Equipment No.	Description	Type	Design Condition	Operating Qty.	Spares
1	CTG Transformer	Oil-filled	18 kV/345 kV, 450 MVA, 3-ph, 60 Hz	1	0
2	STG Transformer	Oil-filled	18 kV/345 kV, 210 MVA, 3-ph, 60 Hz	1	0
3	Medium Voltage Transformer	Oil-filled	18 kV/4.16 kV, 6 MVA, 3-ph, 60 Hz	1	1
4	Low Voltage Transformer	Dry ventilated	4.16 kV/480 V, 1 MVA, 3-ph, 60 Hz	1	1

Equipment No.	Description	Type	Design Condition	Operating Qty.	Spares
5	CTG Isolated Phase Bus Duct and Tap Bus	Aluminum, self-cooled	18 kV, 3-ph, 60 Hz	1	0
6	STG Isolated Phase Bus Duct and Tap Bus	Aluminum, self-cooled	18 kV, 3-ph, 60 Hz	1	0
7	Medium Voltage Switchgear	Metal clad	4.16 kV, 3-ph, 60 Hz	1	1
8	Low Voltage Switchgear	Metal enclosed	480 V, 3-ph, 60 Hz	1	1
9	Emergency Diesel Generator	Sized for emergency shutdown	750 kW, 480 V, 3-ph, 60 Hz	1	0

Case CC1A-H – Account 12: Instrumentation and Control

Equipment No.	Description	Type	Design Condition	Operating Qty.	Spares
1	DCS - Main Control	Monitor/keyboard; Operator printer (laser color); Engineering printer (laser B&W)	Operator stations/printers and engineering stations/printers	1	0
2	DCS - Processor	Microprocessor with redundant input/output	N/A	1	0
3	DCS - Data Highway	Fiber optic	Fully redundant, 25% spare	1	0

3.5.12 Case CC1A-H – Cost Estimating

The cost estimating method was described previously in Section 2.8. Exhibit 3-125 shows a detailed breakdown of the capital costs; Exhibit 3-126 shows the owner's costs, along with the TOC; Exhibit 3-127 shows the initial and annual O&M costs; and Exhibit 3-128 and Exhibit 3-129 show the startup and shutdown costs.

The estimated TPC of Case CC1A-H is $415 million. The project contingency is 13.7 percent of the TPC.

Exhibit 3-125. Case CC1A-H total plant cost details

Case:		CC1A-H	– NGCC H-Class (1x1)				Estimate Type:			Conceptual
							Cost Base:			Dec 2018
Item No.	Description	Equipment Cost	Material Cost	Labor		Bare Erected Cost	Eng'g CM H.O.& Fee	Contingencies		Total Plant Cost
				Direct	Indirect			Process	Project	$/1,000
3		Feedwater & Miscellaneous BOP Systems								
3.1	Feedwater System	$1,392	$2,386	$1,193	$0	$4,971	$994	$0	$895	$6,860
3.2	Water Makeup & Pretreating	$1,102	$110	$625	$0	$1,837	$367	$0	$441	$2,645
3.3	Other Feedwater Subsystems	$791	$259	$246	$0	$1,296	$259	$0	$233	$1,788
3.4	Service Water Systems	$936	$1,786	$5,783	$0	$8,505	$1,701	$0	$2,041	$12,247
3.5	Other Boiler Plant Systems	$188	$69	$171	$0	$428	$86	$0	$77	$591
3.6	Natural Gas Pipeline and Start-Up System	$6,725	$289	$217	$0	$7,232	$1,446	$0	$1,302	$9,980
3.7	Waste Water Treatment Equipment	$194	$0	$119	$0	$313	$63	$0	$75	$451
3.9	Miscellaneous Plant Equipment	$11,056	$1,450	$5,619	$0	$18,125	$3,625	$0	$4,350	$26,100
3.10	Miscellaneous Fast Start Plant Equipment	$1,259	$0	$839	$0	$2,098	$420	$0	$378	$2,896
	SUBTOTAL 3	**$23,643**	**$6,349**	**$14,812**	**$0**	**$44,805**	**$8,961**	**$0**	**$9,792**	**$63,557**
6		Combustion Turbine & Accessories								
6.1	Combustion Turbine Generator	$60,864	$0	$3,704	$0	$64,568	$12,914	$0	$11,622	$89,104
6.3	Combustion Turbine Accessories	$1,934	$0	$118	$0	$2,052	$410	$0	$369	$2,832
6.4	Compressed Air Piping	$0	$639	$145	$0	$783	$157	$0	$141	$1,081
6.5	Combustion Turbine Foundations	$0	$774	$836	$0	$1,610	$322	$0	$386	$2,319
	SUBTOTAL 6	**$62,799**	**$1,413**	**$4,803**	**$0**	**$69,014**	**$13,803**	**$0**	**$12,519**	**$95,336**
7		Ductwork & Stack								
7.1	Heat Recovery Steam Generator	$30,140	$0	$7,535	$0	$37,675	$7,535	$0	$6,781	$51,991
7.2	Heat Recovery Steam Generator Accessories	$12,311	$0	$2,278	$0	$14,590	$2,918	$0	$2,626	$20,134
7.3	Ductwork	$0	$779	$541	$0	$1,320	$264	$0	$238	$1,822
7.4	Stack	$3,455	$0	$639	$0	$4,094	$819	$0	$737	$5,650
7.5	Heat Recovery Steam Generator, Ductwork & Stack Foundations	$0	$581	$545	$0	$1,126	$225	$0	$270	$1,621
7.6	Selective Catalytic Reduction System	$1,120	$471	$656	$0	$2,247	$449	$0	$404	$3,100
7.7	Carbon Monoxide Reduction System	$0	$146	$97	$0	$243	$49	$0	$44	$336
	SUBTOTAL 7	**$47,026**	**$1,976**	**$12,292**	**$0**	**$61,294**	**$12,259**	**$0**	**$11,101**	**$84,654**
8		Steam Turbine & Accessories								
8.1	Steam Turbine Generator & Accessories	$27,270	$0	$3,993	$0	$31,263	$6,253	$0	$5,627	$43,143
8.2	Steam Turbine Plant Auxiliaries	$110	$0	$251	$0	$362	$72	$0	$65	$499
8.3	Condenser & Auxiliaries[A]	$11,985	$0	$5,750	$0	$17,735	$3,547	$0	$3,192	$24,474
8.4	Steam Piping	$6,208	$0	$2,516	$0	$8,724	$1,745	$0	$1,570	$12,038
8.5	Turbine Generator Foundations	$0	$946	$1,563	$0	$2,509	$502	$0	$602	$3,613
8.6	Fast Start Stress Monitoring System	$658	$0	$282	$0	$940	$188	$0	$169	$1,298
	SUBTOTAL 8	**$46,230**	**$946**	**$14,356**	**$0**	**$61,533**	**$12,307**	**$0**	**$11,226**	**$85,065**
9		Cooling Water System								
9.6	Component Cooling Water System[B]	$286	$0	$220	$0	$505	$101	$0	$91	$698
	SUBTOTAL 9	**$286**	**$0**	**$220**	**$0**	**$505**	**$101**	**$0**	**$91**	**$698**
11		Accessory Electric Plant								

Case:		CC1A-H	– NGCC H-Class (1x1)				Estimate Type:			Conceptual
							Cost Base:			Dec 2018
Item No.	Description	Equipment Cost	Material Cost	Labor		Bare Erected Cost	Eng'g CM H.O.& Fee	Contingencies		Total Plant Cost
				Direct	Indirect			Process	Project	$/1,000
11.1	Generator Equipment	$2,188	$0	$1,651	$0	$3,839	$768	$0	$691	$5,298
11.2	Station Service Equipment	$2,161	$0	$185	$0	$2,346	$469	$0	$422	$3,238
11.3	Switchgear & Motor Control	$3,086	$0	$535	$0	$3,621	$724	$0	$652	$4,997
11.4	Conduit & Cable Tray	$0	$746	$2,149	$0	$2,894	$579	$0	$521	$3,994
11.5	Wire & Cable	$0	$1,113	$1,990	$0	$3,103	$621	$0	$559	$4,282
11.6	Protective Equipment	$73	$0	$254	$0	$327	$65	$0	$59	$451
11.7	Standby Equipment	$570	$0	$526	$0	$1,097	$219	$0	$197	$1,513
11.8	Main Power Transformers	$5,683	$0	$116	$0	$5,799	$1,160	$0	$1,044	$8,002
11.9	Electrical Foundations	$0	$77	$196	$0	$273	$55	$0	$66	$394
	SUBTOTAL 11	**$13,761**	**$1,936**	**$7,602**	**$0**	**$23,299**	**$4,660**	**$0**	**$4,210**	**$32,169**
12		**Instrumentation & Control**								
12.1	Natural Gas Combined Cycle Control Equipment	$161	$0	$102	$0	$263	$53	$0	$47	$364
12.2	Combustion Turbine Control Equipment	$309	$0	$197	$0	$505	$101	$0	$91	$697
12.3	Steam Turbine Control Equipment	$258	$0	$164	$0	$422	$84	$0	$76	$582
12.4	Other Major Component Control Equipment	$433	$0	$275	$0	$708	$142	$0	$127	$977
12.5	Signal Processing Equipment	$361	$0	$11	$0	$372	$74	$0	$67	$513
12.6	Control Boards, Panels & Racks	$96	$0	$58	$0	$154	$31	$0	$28	$212
12.7	Distributed Control System Equipment	$5,301	$0	$161	$0	$5,463	$1,093	$0	$983	$7,539
12.8	Instrument Wiring & Tubing	$438	$350	$1,400	$0	$2,188	$438	$0	$394	$3,020
12.9	Other Instrumentation & Controls Equipment	$303	$0	$702	$0	$1,005	$201	$0	$181	$1,387
	SUBTOTAL 12	**$7,659**	**$350**	**$3,072**	**$0**	**$11,081**	**$2,216**	**$0**	**$1,995**	**$15,291**
13		**Improvements to Site**								
13.1	Site Preparation	$0	$472	$10,027	$0	$10,500	$2,100	$0	$2,520	$15,120
13.2	Site Improvements	$0	$1,520	$2,007	$0	$3,526	$705	$0	$846	$5,078
13.3	Site Facilities	$1,458	$0	$1,529	$0	$2,987	$597	$0	$717	$4,302
	SUBTOTAL 13	**$1,458**	**$1,992**	**$13,564**	**$0**	**$17,013**	**$3,403**	**$0**	**$4,083**	**$24,499**
14		**Buildings & Structures**								
14.1	Combustion Turbine Area	$0	$307	$162	$0	$469	$94	$0	$84	$647
14.3	Steam Turbine Building	$0	$2,769	$3,684	$0	$6,453	$1,291	$0	$1,162	$8,905
14.4	Administration Building	$0	$335	$227	$0	$562	$112	$0	$101	$775
14.6	Water Treatment Buildings	$0	$172	$157	$0	$329	$66	$0	$59	$454
14.7	Machine Shop	$0	$500	$320	$0	$820	$164	$0	$148	$1,132
14.8	Warehouse	$0	$389	$235	$0	$625	$125	$0	$112	$862
14.9	Other Buildings & Structures	$0	$285	$207	$0	$492	$98	$0	$89	$679
14.10	Waste Treating Building & Structures	$0	$28	$50	$0	$78	$16	$0	$14	$108
	SUBTOTAL 14	**$0**	**$4,786**	**$5,042**	**$0**	**$9,827**	**$1,965**	**$0**	**$1,769**	**$13,562**
	TOTAL	**$202,862**	**$19,748**	**$75,762**	**$0**	**$298,372**	**$59,674**	**$0**	**$56,786**	**$414,832**

[A]ACC; [B] Component cooling water system consists of a closed loop system and glycol-to-air heat exchangers. The system utilizes a 45 percent solution of glycol and water

Exhibit 3-126. Case CC1A-H owner's costs

Description	$/1,000
Pre-Production Costs	
6 Months All Labor	$3,067
1 Month Maintenance Materials	$464
1 Month Non-fuel Consumables	$92
1 Month Waste Disposal	$0
25% of 1 Months Fuel Cost at 100% CF	$2,772
2% of TPC	$8,297
Total	**$14,691**
Inventory Capital	
60-day supply of consumables at 100% CF	$183
0.5% of TPC (spare parts)	$2,074
Total	**$2,258**
Other Costs	
Initial Cost for Catalyst and Chemicals	$1,797
Land	$300
Other Owner's Costs	$62,225
Financing Costs	$11,200
Total Overnight Costs (TOC)	**$507,302**

Exhibit 3-127. Case CC1A-H initial and annual operating and maintenance costs

Case:	CC1A-H	– NGCC H-Class (1x1)		Cost Base:	Dec 2018
Plant Size (MW, gross):	552	Heat Rate-net (Btu/kWh):		6,225	
Operating & Maintenance Labor					
Operating Labor			**Operating Labor Requirements per Shift**		
Operating Labor Rate (base):	38.50	**$/hour**	Skilled Operator:		1.0
Operating Labor Burden:	30.00	**% of base**	Operator:		1.0
Labor O-H Charge Rate:	25.00	**% of labor**	Foreman:		1.0
			Lab Techs, etc.:		1.0
			Total:		**4.0**

Fixed Operating Costs	
	Annual Cost ($)
Annual Operating Labor:	$1,753,752
Maintenance Labor:	$3,152,720
Administrative & Support Labor:	$1,226,618
Property Taxes and Insurance:	$8,296,631
Total:	**$14,429,721**

Variable Operating Costs					
					Annual Cost ($)
Maintenance Material:					$5,563,623 x CF
Consumables					
	Initial Fill	**Per Day**	**Per Unit**	**Initial Fill**	**Annual Cost ($)**
Water (gal/1000):	0	5	$1.90	$0	$3,381 x CF
Makeup and Waste Water Treatment Chemicals (ton):	0	0.015	$550.00	$0	$2,915 x CF
Ammonia (19 wt%, ton):	0	6.7	$300.00	$0	$738,446 x CF
SCR Catalyst (ft^3):	3,816	2.09	$150.00	$572,466	$114,493 x CF
CO Catalyst (ft^3):	306	0.17	$4,000.00	$1,224,596	$244,919 x CF
Subtotal:				**$1,797,062**	**$1,104,155 x CF**
Waste Disposal					
SCR Catalyst (ft^3):	0	2.09	$2.50	$0	$1,908 x CF
CO Catalyst (ft^3):	0	0.17	$2.50	$0	$153 x CF
Subtotal:				**$0**	**$2,061 x CF**
Variable Operating Costs Total:				**$1,797,062**	**$6,669,839 x CF**

Fuel Cost					
Natural Gas (MMBtu):	0	82,472	$4.42	$0	$133,052,782 x CF
Fuel Costs Total:				**$0**	**$133,052,782 x CF**

Exhibit 3-128. Case CC1A-H synchronization startup and shutdown costs

Event to Synchronization		Hot Start	Warm Start	Cold Start	Shutdown
Energy and Duration					
Energy Produced	MWh	-	-	-	-
Duration	min	5	5	5	24
NG Heat Input (HHV)	MMBtu	240	240	240	20
House Energy Consumed	MWh	0.6	0.6	0.6	0.0
Aux Boiler Heat Input (HHV)	MMBtu	-	150	300	-
Costs					
Energy Sold Cost	$	-	-	-	-
Variable O&M Cost	$	50	50	50	-
Natural Gas Cost	$	1,060	1,720	2,390	90
House Energy Cost	$	30	30	30	-
Total Cost for Event	**$**	**1,140**	**1,800**	**2,470**	**90**

Exhibit 3-129. Case CC1A-H full load startup and shutdown costs

Event to Full Load		Hot Start	Warm Start	Cold Start	Shutdown
Energy and Duration					
Energy Produced	MWh	102.2	184.4	324.6	69.1
Duration	min	30	85	130	45
NG Heat Input (HHV)	MMBtu	1,026	3,249	6,154	381
House Energy Consumed	MWh	2.4	7.6	14.3	0.9
Aux Boiler Heat Input (HHV)	MMBtu	-	300	590	-
Costs					
Energy Sold Cost	$	(6,100)	(11,100)	(19,500)	(4,100)
Variable O&M Cost	$	200	600	1,200	100
Natural Gas Cost	$	4,500	15,700	29,800	1,700
House Energy Cost	$	100	500	900	100
Total Cost for Event	**$**	**(1,300)**	**5,700**	**12,400**	**(2,200)**

3.5.13 Case CC2A-F – Process Description

The process description for Case CC2A-F is the same as CC1A-F (see Section 3.5.3), with the exception of Case CC2A-F having a 2x1 configuration, compared to Case CC1A-F's 1x1 configuration.

3.5.14 Case CC2A-F – Full Load Performance Results

The BFD for Case CC2A-F is shown in Exhibit 3-130. Steam tables that outline process data for the numbered streams in the BFD are provided in Exhibit 3-131. The BFD shows only one of the trains, but the flow rates in the stream table are the total system. As the difference between CC2A-F and CC2A-FC do not have an observable impact on performance, only the results of Case CC2A-F are provided. The BFD shows only one of the trains, but the flow rates in the stream table are the total system. Full stream tables are only provided for the 100 percent load point.

Exhibit 3-130. Case CC2A-F BFD, NGCC

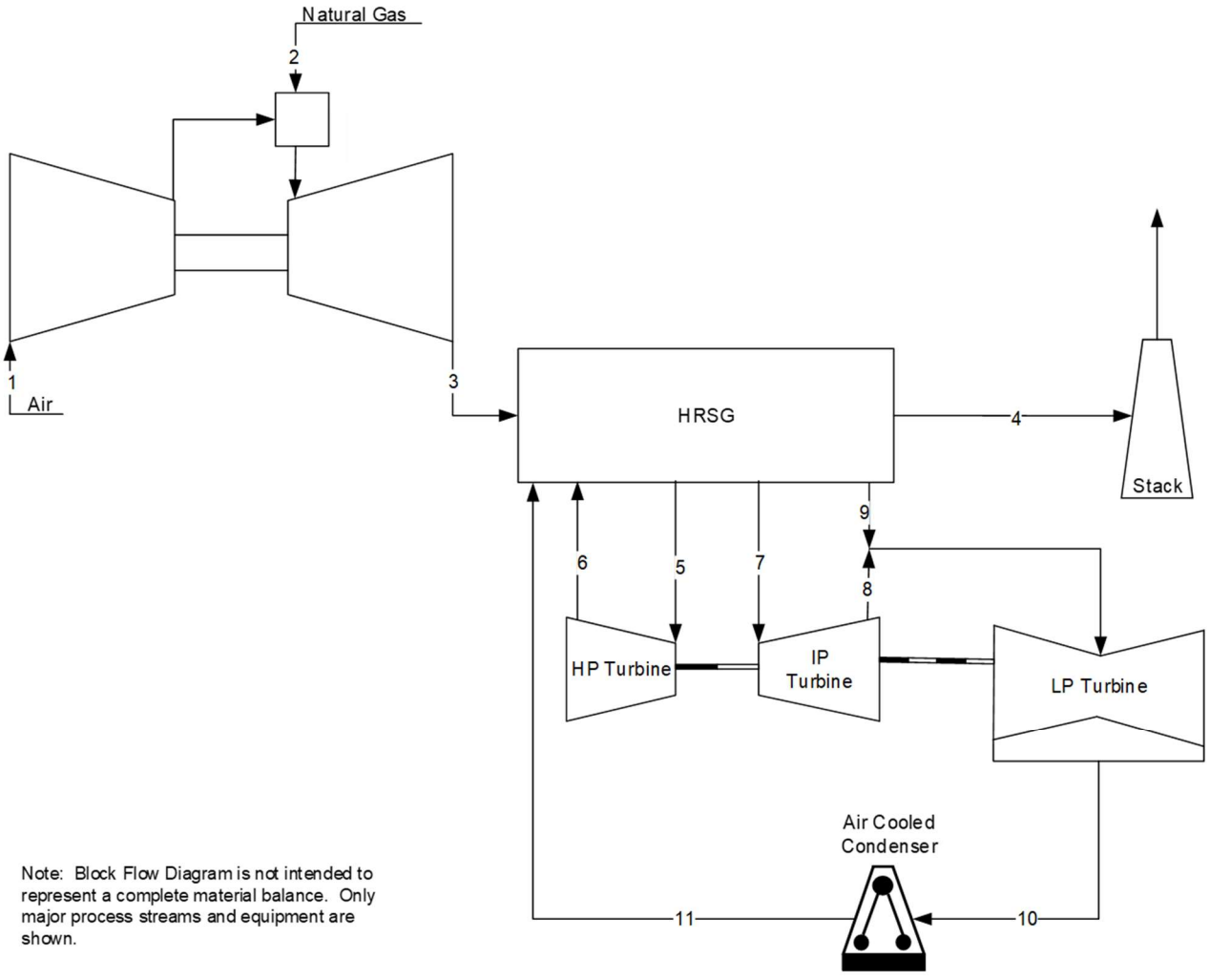

Exhibit 3-131. Case CC2A-F stream table, NGCC

	1	2	3	4	5	6	7	8	9	10	11
V-L Mole Fraction											
Ar	0.0092	0.0000	0.0089	0.0089	0.0000	0.0000	0.0000	0.0000	0.0000	0.0000	0.0000
CH_4	0.0000	0.9310	0.0000	0.0000	0.0000	0.0000	0.0000	0.0000	0.0000	0.0000	0.0000
CH_4S	0.0000	0.0000	0.0000	0.0000	0.0000	0.0000	0.0000	0.0000	0.0000	0.0000	0.0000
C_2H_6	0.0000	0.0320	0.0000	0.0000	0.0000	0.0000	0.0000	0.0000	0.0000	0.0000	0.0000
C_3H_8	0.0000	0.0070	0.0000	0.0000	0.0000	0.0000	0.0000	0.0000	0.0000	0.0000	0.0000
C_4H_{10}	0.0000	0.0040	0.0000	0.0000	0.0000	0.0000	0.0000	0.0000	0.0000	0.0000	0.0000
CO_2	0.0003	0.0100	0.0423	0.0423	0.0000	0.0000	0.0000	0.0000	0.0000	0.0000	0.0000
H_2O	0.0099	0.0000	0.0903	0.0903	1.0000	1.0000	1.0000	1.0000	1.0000	1.0000	1.0000
N_2	0.7732	0.0160	0.7417	0.7417	0.0000	0.0000	0.0000	0.0000	0.0000	0.0000	0.0000
O_2	0.2074	0.0000	0.1168	0.1168	0.0000	0.0000	0.0000	0.0000	0.0000	0.0000	0.0000
SO_2	0.0000	0.0000	0.0000	0.0000	0.0000	0.0000	0.0000	0.0000	0.0000	0.0000	0.0000
Total	1.0000	1.0000	1.0000	1.0000	1.0000	1.0000	1.0000	1.0000	1.0000	1.0000	1.0000
V-L Flowrate, kg_{mol}/hr	131,864	5,546	137,571	137,571	29,804	28,802	32,539	32,504	4,213	36,982	37,089
V-L Flowrate, kg/hr	3,805,186	96,104	3,901,290	3,901,290	536,923	518,872	586,202	585,577	75,906	666,237	668,175
Solids Flowrate, kg/hr	0	0	0	0	0	0	0	0	0	0	0
Temperature, °C	15	27	651	82	585	364	584	307	292	46	46
Pressure, MPa, abs	0.10	2.96	0.11	0.10	16.50	3.97	3.56	0.52	0.51	0.01	0.01
Steam Table Enthalpy, kJ/kg[A]	30.23	22.04	870.35	229.61	3,528.12	3,128.27	3,641.39	3,078.35	3,046.59	2,436.25	193.14
AspenPlus Enthalpy, kJ/kg[B]	-97.58	-4,487.18	-657.04	-1,297.78	-12,452.17	-12,852.02	-12,338.90	-12,901.94	-12,933.70	-13,544.05	-15,787.16
Density, kg/m^3	1.2	22.1	0.4	1.0	45.6	14.5	9.2	2.0	2.0	0.1	989.7
V-L Molecular, Weight	28.857	17.328	28.358	28.358	18.015	18.015	18.015	18.015	18.015	18.015	18.015
V-L Flowrate, lb_{mol}/hr	290,710	12,227	303,292	303,292	65,706	63,497	71,737	71,660	9,289	81,531	81,768
V-L Flowrate, lb/hr	8,389,000	211,872	8,600,872	8,600,872	1,183,713	1,143,916	1,292,355	1,290,975	167,345	1,468,801	1,473,073
Solids Flowrate, lb/hr	0	0	0	0	0	0	0	0	0	0	0
Temperature, °F	59	80	1,204	180	1,085	688	1,083	585	557	115	115
Pressure, psia	14.7	430.0	15.3	14.8	2,393.8	575.2	515.7	75.0	73.5	1.5	1.5
Steam Table Enthalpy, Btu/lb[A]	13.0	9.5	374.2	98.7	1,516.8	1,344.9	1,565.5	1,323.5	1,309.8	1,047.4	83.0
AspenPlus Enthalpy, Btu/lb[B]	-42.0	-1,929.1	-282.5	-557.9	-5,353.5	-5,525.4	-5,304.8	-5,546.8	-5,560.5	-5,822.9	-6,787.3
Density, lb/ft^3	0.076	1.380	0.024	0.061	2.850	0.903	0.571	0.122	0.123	0.005	61.784

[A]Steam table reference conditions are 32.02°F & 0.089 psia

[B]Aspen thermodynamic reference state is the component's constituent elements in an ideal gas state at 25°C and 1 atm

At full load, the plant produces a net output of 738 MW at a net plant efficiency of 52.9 percent (HHV basis). Full load performance for Case CC2A-F is summarized in Exhibit 3-132.
Exhibit 3-133 presents a detailed breakdown of the auxiliary power requirements at full load.

Exhibit 3-132. Case CC2A-F plant performance summary

Performance Summary	
Combustion Turbine Power, MWe	486
Steam Turbine Power, MWe	265
Total Gross Power, MWe	**751**
Nameplate Capacity, MWe	**751**
Balance of Plant, kWe	12,354
Total Auxiliaries, MWe	**12**
Net Power, MWe	**738**
HHV Net Plant Efficiency, %	52.9%
HHV Net Plant Heat Rate, kJ/kWh (Btu/kWh)	6,807 (6,452)
HHV Combustion Turbine Efficiency, %	34.8%
LHV Net Plant Efficiency, %	58.6%
LHV Net Plant Heat Rate, kJ/kWh (Btu/kWh)	6,144 (5,823)
LHV Combustion Turbine Efficiency, %	38.59%
Steam Turbine Cycle Efficiency, %	38.1%
Steam Turbine Heat Rate, kJ/kWh (Btu/kWh)	9,451 (8,958)
Condenser Duty, GJ/hr (MMBtu/hr)	1,498 (1,420)
Natural Gas Feed Flow, kg/hr (lb/hr)	96,104 (211,872)
HHV Thermal Input, kWt	1,396,033
LHV Thermal Input, kWt	1,260,058
Raw Water Withdrawal, $(m^3/min)/MW_{net}$ (gpm/MW_{net})	0.00 (0.01)
Raw Water Consumption, $(m^3/min)/MW_{net}$ (gpm/MW_{net})	0.00 (0.00)

Exhibit 3-133. Case CC2A-F plant power summary

Power Summary	
Combustion Turbine Power, MWe	486
Steam Turbine Power, MWe	265
Total Gross Power, MWe	**751**
Nameplate Total Capacity, MWe	**751**
Auxiliary Load Summary	
Air Cooled Condenser Fans	4,486
Ancillary Glycol Cooling Loops, kWe	89
Attemperating Air Fan, kWe	–
Combustion Turbine Auxiliaries, kWe	1,050
Combustion Turbine Water Injection Pump, kWe	–
Condensate Pumps, kWe	150
Feedwater Pumps, kWe	3,780
Ground Water Pumps, kWe	–
Miscellaneous Balance of Plant,[A] kWe	374
Natural Gas Compression, kWe	–
SCR, kWe	6
Steam Turbine Auxiliaries, kWe	139
Transformer Losses, kWe	2,280
Total Auxiliaries, MWe	**12**
Net Power, MWe	**738**

[A]Includes plant control systems, lighting, HVAC, and miscellaneous low voltage loads

3.5.14.1 Environmental Performance

The environmental targets for emissions of NOx, SO_2, and PM were presented in Section 2.3. A summary of the plant air emissions for Case CC2A-F is presented in Exhibit 3-134.

Exhibit 3-134. Case CC2A-F air emissions

	kg/GJ (lb/MMBtu)	tonne/year (ton/year)[A]	kg/MWh (lb/MWh)[B]
SO_2	0.000 (0.001)	18 (20)	0.003 (0.006)
NOx	0.002 (0.004)	81 (89)	0.012 (0.027)
Particulate	0.001 (0.003)	57 (63)	0.009 (0.019)
Hg	0.000 (0.000)	0 (0)	0.000 (0.000)
VOC	0.001 (0.002)	34 (37)	0.005 (0.011)
CO	0.001 (0.002)	42 (46)	0.006 (0.014)
CO_2	51 (119)	2,244,635 (2,474,286)	341 (753)
CO_2[C]	-	-	347 (765)

[A]Calculations based on a 100 percent capacity factor
[B]Emissions based on gross power except where otherwise noted
[C]CO_2 emissions based on net power instead of gross power

For the purpose of this report, the natural gas was assumed to contain the domestic average value of total sulfur of 0.34 gr/100 scf (4.71×10^{-4} lb-S/MMBtu). [9] It was also assumed that the added CH_4S was the sole contributor of sulfur to the natural gas. No sulfur capture systems were required.

Uncontrolled NOx emissions from the CT is about 25 ppmvd at 15 percent O_2, which is achieved with a DLN burner in the CTG. An SCR unit then further reduces the NOx concentration to 1.8 ppmvd at 15 percent O_2. [17] [16]

The pipeline natural gas was assumed to contain no Hg or HCl, resulting in zero emissions.

The uncontrolled CO and VOC emissions from this CT are 6.6 ppmvd at 15 percent O_2 and 1.1 ppmvd at 15 percent O_2, respectively. A CO catalyst is used to control the CO emissions to 1.0 ppmvd at 15 percent O_2 and the VOC emissions target of 1.4 ppmvd at 15 percent O_2 does not require further reduction (though the CO catalyst will passively reduce VOC).

The production of PM is a result of system inefficiencies and is not produced or emitted in any significant amount.

CO_2 emissions represent the uncontrolled discharge from the process.

The carbon balance for the plant is shown in

Exhibit 3-135. The carbon input to the plant consists of carbon in the natural gas and carbon in the air. Carbon leaves the plant as CO_2 through the stack.

Exhibit 3-135. Case CC2A-F carbon balance

Carbon In		Carbon Out	
	kg/hr (lb/hr)		kg/hr (lb/hr)
Natural Gas	69,414 (153,031)	Stack Gas	69,931 (154,172)
Air (CO_2)	517 (1,141)		
Total	**69,931 (154,172)**	**Total**	**69,931 (154,172)**

As shown in Exhibit 3-136, the sulfur content of the natural gas is insignificant. All sulfur in the natural gas is emitted in the stack gas.

Exhibit 3-136. Case CC2A-F sulfur balance

Sulfur In		Sulfur Out	
	kg/hr (lb/hr)		kg/hr (lb/hr)
Natural Gas	1.0 (2.3)	Stack Gas	1.0 (2.3)
Total	**1.0 (2.3)**	**Total**	**1.0 (2.3)**

Exhibit 3-137 shows the water balance for Case CC2A-F.

Exhibit 3-137. Case CC2A-F water balance

Water Use	Water Demand	Internal Recycle	Raw Water Withdrawal	Process Water Discharge	Raw Water Consumption
	m^3/min (gpm)	m^3/min (gpm)	m^3/min (gpm)	m^3/min (gpm)	m^3/min (gpm)
Steam Packing	–	–	–	0.0 (2.8)	0.0 (-2.8)
Deaerator Vent	–	–	–	0.0 (5.9)	0.0 (-5.9)
Condenser Makeup	**0.0 (8.7)**	**–**	**0.0 (8.7)**	**–**	**0.0 (8.7)**
BFW Makeup	0.0 (8.7)	–	0.0 (8.7)	–	0.0 (8.7)
Total	0.0 (8.7)	–	0.0 (8.7)	0.0 (8.7)	–

3.5.14.2 Energy and Mass Balance Diagrams

An energy and mass balance diagram is shown for Case CC2A-F in Exhibit 3-138.

An overall plant energy balance is provided in tabular form in Exhibit 3-139. The power out is the combined CT and ST power prior to generator losses. The power at the generator terminals (shown in Exhibit 3-132) is calculated by multiplying the power out by the generator efficiency: 98.6 percent for the CT, and 98.6 percent for the ST.

Exhibit 3-138. Case CC2A-F energy and mass balance, NGCC

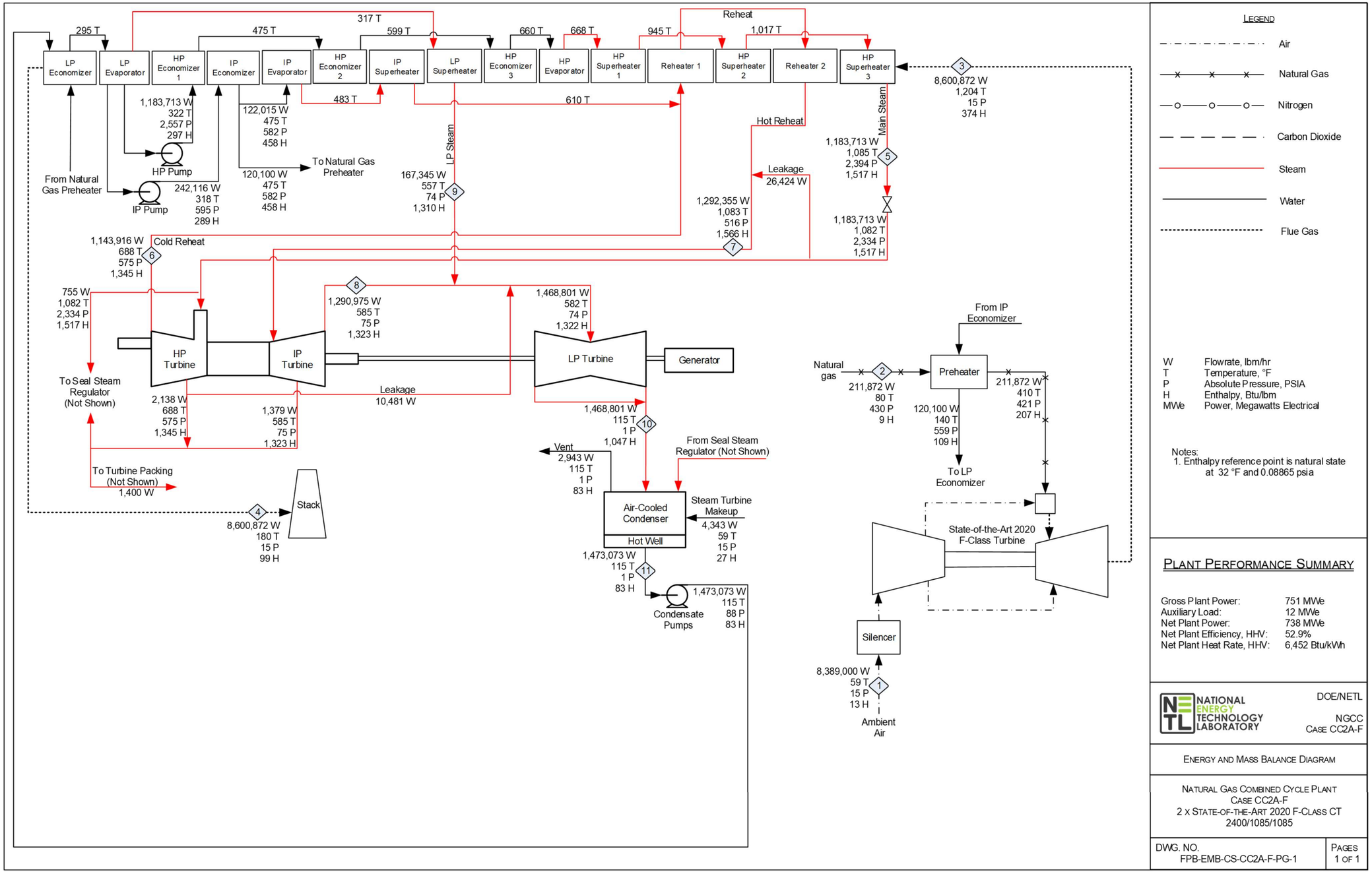

LEGEND

- Air
- Natural Gas
- Nitrogen
- Carbon Dioxide
- Steam
- Water
- Flue Gas

W	Flowrate, lbm/hr
T	Temperature, °F
P	Absolute Pressure, PSIA
H	Enthalpy, Btu/lbm
MWe	Power, Megawatts Electrical

Notes:
1. Enthalpy reference point is natural state at 32 °F and 0.08865 psia

PLANT PERFORMANCE SUMMARY

Gross Plant Power:	751 MWe
Auxiliary Load:	12 MWe
Net Plant Power:	738 MWe
Net Plant Efficiency, HHV:	52.9%
Net Plant Heat Rate, HHV:	6,452 Btu/kWh

NATIONAL ENERGY TECHNOLOGY LABORATORY

DOE/NETL

NGCC
CASE CC2A-F

ENERGY AND MASS BALANCE DIAGRAM

NATURAL GAS COMBINED CYCLE PLANT
CASE CC2A-F
2 X STATE-OF-THE-ART 2020 F-CLASS CT
2400/1085/1085

DWG. NO.	PAGES
FPB-EMB-CS-CC2A-F-PG-1	1 OF 1

This page intentionally left blank

Exhibit 3-139. Case CC2A-F overall energy balance (0°C [32°F] reference)

	HHV	Sensible + Latent	Power	Total
Heat In GJ/hr (MMBtu/hr)				
Natural Gas	5,026 (4,763)	3.4 (3.2)	–	5,029 (4,767)
Air	–	115 (109)	–	115 (109)
Raw Water Makeup	–	0.1 (0.1)	–	0.1 (0.1)
Auxiliary Power	–	–	44 (42)	44 (42)
TOTAL	**5,026 (4,763)**	**119 (112)**	**44 (42)**	**5,189 (4,918)**
Heat Out GJ/hr (MMBtu/hr)				
Stack Gas	–	896 (849)	–	896 (849)
Sulfur	–	–	–	–
Motor Losses and Design Allowances	–	–	36 (34)	36 (34)
Cooling Load[A]	–	1,524 (1,445)	–	1,524 (1,445)
CO_2 Product Stream	–	–	–	–
Deaerator Vent	–	0.3 (0.2)	–	0.3 (0.2)
Ambient Losses[B]	–	*53 (50)*	–	53 (50)
Power	–	–	2,703 (2,561)	2,703 (2,561)
TOTAL	**–**	**2,474 (2,344)**	**2,739 (2,596)**	**5,212 (4,940)**
Unaccounted Energy[C]	**–**	*-23 (-22)*	–	*-23 (-22)*

[A]Includes condenser and miscellaneous cooling loads
[B]Ambient losses include all losses to the environment through radiation, convection, etc. Sources of these losses include the combustor, reheater, superheater, and transformers
[C]By difference

3.5.15 Case CC2A-F – Part Load Performance Results

Plant performance results are summarized at each discrete load point in Exhibit 3-140. Exhibit 3-141 displays a detailed breakdown of the auxiliary power requirement at each discrete load point. Air emissions at each discrete load point are summarized in Exhibit 3-142. The load points are presented as a fraction of the CT nameplate capacity. The results presented in this section are reflective of steady-state operation. Performance associated with specific operating profiles (e.g., load-following, peaking) will differ.

Exhibit 3-140. Case CC2A-F part load plant performance summary

Performance Summary												
Percent Load, % of CTG Gross Output	**100%**	**95%**	**90%**	**85%**	**80%**	**75%**	**70%**	**65%**	**60%**	**55%**	**50%**	**42%**
Combustion Turbine Power, MWe	486	462	436	414	389	365	340	315	292	268	243	203
Steam Turbine Power, MWe	265	244	224	215	210	204	199	192	185	178	173	169
Total Gross Power, MWe	**751**	**706**	**661**	**629**	**599**	**569**	**539**	**508**	**476**	**446**	**416**	**372**
Nameplate Capacity, MWe	**751**	**751**	**751**	**751**	**751**	**751**	**751**	**751**	**751**	**751**	**751**	**751**
Total Auxiliaries, MWe	**12**	**11**	**10**	**10**	**9**	**9**	**9**	**8**	**8**	**7**	**7**	**7**
Total Auxiliaries, % of Gross Power	**1.6%**	**1.6%**	**1.6%**	**1.6%**	**1.6%**	**1.6%**	**1.6%**	**1.6%**	**1.6%**	**1.6%**	**1.7%**	**1.8%**
Net Power, MWe	**738**	**694**	**650**	**619**	**589**	**560**	**530**	**500**	**469**	**438**	**409**	**365**
HHV Net Plant Efficiency, %	52.9%	52.0%	52.1%	52.2%	52.2%	52.1%	51.9%	51.5%	50.9%	50.2%	49.4%	47.5%
HHV Net Plant Heat Rate, kJ/kWh (Btu/kWh)	6,807 (6,452)	6,926 (6,565)	6,911 (6,551)	6,894 (6,534)	6,892 (6,532)	6,910 (6,549)	6,942 (6,580)	6,995 (6,630)	7,072 (6,703)	7,171 (6,796)	7,295 (6,914)	7,573 (7,178)
HHV Combustion Turbine Efficiency, %	34.8%	34.6%	35.0%	34.9%	34.5%	33.9%	33.2%	32.5%	31.7%	30.7%	29.3%	26.4%
LHV Net Plant Efficiency, %	58.6%	57.6%	57.7%	57.9%	57.9%	57.7%	57.5%	57.0%	56.4%	55.6%	54.7%	52.7%
LHV Net Plant Heat Rate, kJ/kWh (Btu/kWh)	6,144 (5,823)	6,252 (5,926)	6,238 (5,913)	6,222 (5,898)	6,221 (5,896)	6,237 (5,911)	6,266 (5,939)	6,313 (5,984)	6,384 (6,050)	6,472 (6,134)	6,584 (6,241)	6,835 (6,479)
LHV Combustion Turbine Efficiency, %	38.6%	38.3%	38.7%	38.6%	38.2%	37.6%	36.8%	36.0%	35.1%	34.0%	32.4%	29.2%
Steam Turbine Cycle Efficiency, %	38.1%	37.4%	37.2%	37.2%	37.3%	37.5%	37.8%	37.9%	37.9%	37.9%	37.8%	37.6%
Steam Turbine Heat Rate, kJ/kWh (Btu/kWh)	9,451 (8,958)	9,614 (9,112)	9,686 (9,181)	9,680 (9,175)	9,640 (9,137)	9,591 (9,090)	9,528 (9,031)	9,488 (8,993)	9,487 (8,992)	9,503 (9,008)	9,521 (9,024)	9,581 (9,081)
Condenser Duty, GJ/hr (MMBtu/hr)	1,498 (1,420)	1,416 (1,342)	1,318 (1,249)	1,263 (1,197)	1,221 (1,158)	1,181 (1,120)	1,138 (1,079)	1,093 (1,036)	1,049 (995)	1,013 (960)	990 (939)	978 (927)
Natural Gas Feed Flow, kg/hr (lb/hr)	96,104 (211,872)	91,946 (202,705)	85,917 (189,414)	81,604 (179,905)	77,629 (171,143)	73,970 (163,075)	70,381 (155,163)	66,821 (147,316)	63,366 (139,697)	60,107 (132,514)	57,053 (125,779)	52,884 (116,590)
HHV Thermal Input, kWt	1,396,033	1,335,632	1,248,055	1,185,402	1,127,668	1,074,510	1,022,374	970,671	920,470	873,138	828,764	768,216
LHV Thermal Input, kWt	1,260,058	1,205,540	1,126,493	1,069,942	1,017,831	969,851	922,793	876,127	830,815	788,093	748,042	693,390
Raw Water Withdrawal, (m^3/min)/MWnet (gpm/MWnet)	0.00 (0.01)	0.00 (0.01)	0.00 (0.01)	0.00 (0.01)	0.00 (0.01)	0.00 (0.01)	0.00 (0.01)	0.00 (0.01)	0.00 (0.01)	0.00 (0.01)	0.00 (0.01)	0.00 (0.01)
Raw Water Consumption, (m^3/min)/MWnet (gpm/MWnet)	0.00 (0.00)	0.00 (0.00)	0.00 (0.00)	0.00 (0.00)	0.00 (0.00)	0.00 (0.00)	0.00 (0.00)	0.00 (0.00)	0.00 (0.00)	0.00 (0.00)	0.00 (0.00)	0.00 (0.00)

Exhibit 3-141. Case CC2A-F part load plant power summary

Power Summary												
Percent Load, % of CTG Gross Output	**100%**	**95%**	**90%**	**85%**	**80%**	**75%**	**70%**	**65%**	**60%**	**55%**	**50%**	**42%**
Combustion Turbine Power, MWe	486	462	436	414	389	365	340	315	292	268	243	203
Steam Turbine Power, MWe	265	244	224	215	210	204	199	192	185	178	173	169
Total Gross Power, MWe	**751**	**706**	**661**	**629**	**599**	**569**	**539**	**508**	**476**	**446**	**416**	**372**
Nameplate Capacity, MWe	**751**	**751**	**751**	**751**	**751**	**751**	**751**	**751**	**751**	**751**	**751**	**751**
Auxiliary Load Summary												
Air Cooled Condenser Fans	4,486	4,225	3,919	3,747	3,617	3,491	3,250	3,012	2,792	2,597	2,440	2,409
Ancillary Glycol Cooling Loops, kWe	89	89	89	89	89	89	89	89	89	89	89	89
Attemperating Air Fan, kWe	–	–	–	–	–	–	–	–	–	–	–	–
Combustion Turbine Auxiliaries, kWe	1,050	1,050	1,050	1,050	1,050	1,050	1,050	1,050	1,050	1,050	1,050	1,050
Combustion Turbine Water Injection Pump, kWe	–	–	–	–	–	–	–	–	–	–	–	–
Condensate Pumps, kWe	150	140	120	110	100	90	90	80	70	70	60	60
Feedwater Pumps, kWe	3,780	3,270	2,760	2,510	2,330	2,200	2,080	1,950	1,830	1,720	1,640	1,540
Ground Water Pumps, kWe	–	–	–	–	–	–	–	–	–	–	–	–
Miscellaneous Balance of Plant,[A] kWe	374	351	329	313	298	283	268	253	237	222	207	185
Natural Gas Compression, kWe	–	–	–	–	–	–	–	–	–	–	–	–
SCR, kWe	6	6	6	6	6	5	5	5	5	5	5	4
Steam Turbine Auxiliaries, kWe	139	139	139	139	139	139	139	139	139	139	139	139
Transformer Losses, kWe	2,280	2,140	2,000	1,910	1,820	1,730	1,640	1,540	1,450	1,350	1,260	1,130
Total Auxiliaries, MWe	**12**	**11**	**10**	**10**	**9**	**9**	**9**	**8**	**8**	**7**	**7**	**7**
Net Power, MWe	**738**	**694**	**650**	**619**	**589**	**560**	**530**	**500**	**469**	**438**	**409**	**365**

[A]Includes plant control systems, lighting, HVAC, and miscellaneous low voltage loads

Exhibit 3-142. Case CC2A-F part load air emissions summary

Emissions Summary												
Percent Load, % of CTG Gross Output	**100%**	**95%**	**90%**	**85%**	**80%**	**75%**	**70%**	**65%**	**60%**	**55%**	**50%**	**42%**
SO_2, kg/MWh-gross (lb/MWh-gross)	0.003 (0.006)	0.003 (0.006)	0.003 (0.006)	0.003 (0.006)	0.003 (0.006)	0.003 (0.006)	0.003 (0.006)	0.003 (0.006)	0.003 (0.006)	0.003 (0.006)	0.003 (0.006)	0.003 (0.007)
NOx, kg/MWh-gross (lb/MWh-gross)	0.012 (0.027)	0.012 (0.028)	0.012 (0.027)	0.012 (0.027)	0.012 (0.027)	0.012 (0.027)	0.013 (0.028)	0.013 (0.028)	0.013 (0.028)	0.013 (0.028)	0.013 (0.029)	0.014 (0.030)
Particulate, kg/MWh-gross (lb/MWh-gross)	0.009 (0.019)	0.009 (0.021)	0.010 (0.022)	0.010 (0.023)	0.011 (0.024)	0.012 (0.025)	0.012 (0.027)	0.013 (0.029)	0.014 (0.030)	0.015 (0.032)	0.016 (0.035)	0.018 (0.039)
Hg, kg/MWh-gross (lb/MWh-gross)	0.000 (0.000)	0.000 (0.000)	0.000 (0.000)	0.000 (0.000)	0.000 (0.000)	0.000 (0.000)	0.000 (0.000)	0.000 (0.000)	0.000 (0.000)	0.000 (0.000)	0.000 (0.000)	0.000 (0.000)
VOC, kg/MWh-gross (lb/MWh-gross)	0.005 (0.011)	0.005 (0.011)	0.005 (0.011)	0.005 (0.011)	0.005 (0.011)	0.005 (0.011)	0.005 (0.011)	0.005 (0.012)	0.005 (0.012)	0.005 (0.012)	0.005 (0.012)	0.006 (0.012)
CO, kg/MWh-gross (lb/MWh-gross)	0.006 (0.014)	0.006 (0.014)	0.006 (0.014)	0.006 (0.014)	0.006 (0.014)	0.006 (0.014)	0.006 (0.014)	0.007 (0.014)	0.007 (0.015)	0.007 (0.015)	0.007 (0.015)	0.007 (0.016)
CO_2, kg/MWh-gross (lb/MWh-gross)	341 (753)	348 (766)	347 (765)	346 (763)	346 (763)	347 (765)	348 (768)	351 (774)	355 (783)	360 (793)	366 (807)	380 (837)
CO_2, kg/MWh-net (lb/MWh-net)	347 (765)	353 (779)	353 (777)	352 (775)	352 (775)	352 (777)	354 (781)	357 (787)	361 (795)	366 (806)	372 (821)	387 (852)

All emissions are maintained at or below the environmental target emission limits across the entire load range.

Exhibit 3-143 displays the Case CC2A-F itemized efficiencies (HHV net plant efficiency, HHV CT efficiency, and ST cycle efficiency) and normalized auxiliary power consumption across the load range.

Exhibit 3-143. Case CC2A-F part load itemized efficiencies

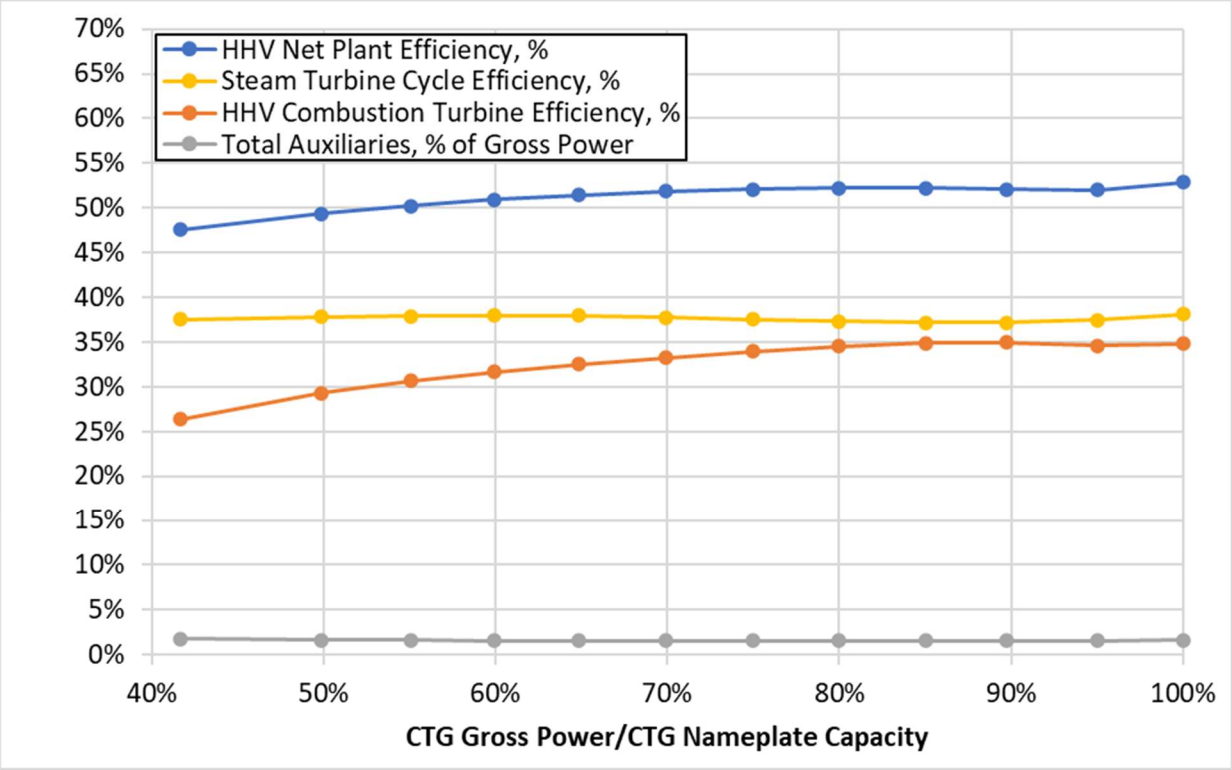

The decrease in part load net plant efficiency is primarily attributable to a decrease in the part load CT efficiency. The initial dip in the CT efficiency is the result of the turbine operation being limited by exhaust speed at base load. As parts of the turbine are undersized compared to the advanced compressor capability, the airflow through the IGVs is limited. From full load to approximately 90 percent load, the firing temperature is derated to control exhaust speed, which reduces the exhaust temperature. From approximately 90 percent load to approximately 60 percent load, the unit is primarily part loaded by closing the IGVs, which increases the exhaust temperature up to the limit of 1215°F. Below approximately 55 percent load, the IGVs are closed and the firing temperature is derated to maintain the exhaust temperature at 1215°F. The impact on net plant efficiency resulting from the increase in the normalized auxiliary power consumption is minor.

3.5.16 Case CC2A-F – Major Equipment List

Case CC2A-F – Account 3: Feedwater and Miscellaneous Balance of Plant Systems

Equipment No.	Description	Type	Design Condition	Operating Qty.	Spares
1	Demineralized Water Storage Tank	Vertical, cylindrical, outdoor	260,000 liters (69,000 gal)	2	0
2	Condensate Pumps	Vertical canned	12,330 lpm @ 70 m H_2O (3,260 gpm @ 240 ft H_2O)	1	1
3	Boiler Feedwater Pump	Horizontal, split case, multi-stage, centrifugal, with interstage bleed for IP and LP feedwater	HP water: 9,910 lpm @ 2,100 m H_2O (2,620 gpm @ 6,900 ft H_2O) IP water: 2,030 lpm @ 430 m H_2O (540 gpm @ 1,420 ft H_2O)	2	2
4	Auxiliary Boiler	Shop fabricated, water tube	18,000 kg/hr, 2.8 MPa, 343°C (40,000 lb/hr, 400 psig, 650°F)	1	0
5	Service Air Compressors	Flooded Screw	13 m^3/min @ 0.7 MPa (450 scfm @ 100 psig)	2	1
6	Instrument Air Dryers	Duplex, regenerative	13 m^3/min (450 scfm)	2	1
9	Engine-Driven Fire Pump	Vertical turbine, diesel engine	3,785 lpm @ 110 m H_2O (1,000 gpm @ 350 ft H_2O)	1	1
10	Fire Service Booster Pump	Two-stage horizontal centrifugal	2,650 lpm @ 80 m H_2O (700 gpm @ 250 ft H_2O)	1	1
11	Raw Water Pumps	Stainless steel, single suction	150 lpm @ 20 m H_2O (40 gpm @ 60 ft H_2O)	2	1
12	Filtered Water Pumps	Stainless steel, single suction	150 lpm @ 50 m H_2O (40 gpm @ 160 ft H_2O)	2	1
13	Filtered Water Tank	Vertical, cylindrical	145,000 liter (38,000 gal)	1	0
14	Makeup Water Demineralizer	Multi-media filter, cartridge filter, RO membrane assembly and electro-deionization unit	330 lpm (90 gpm)	1	0
15	Liquid Waste Treatment System	–	10 years, 24-hour storm	1	0
16	Gas Pipeline	Underground, coated carbon steel, wrapped cathodic protection	80 m^3/min @ 3.0 MPa (2,815 acfm @ 430 psia) 39 cm (16 in) standard wall pipe	16 km (10 mile)	0
17	Gas Metering Station	–	80 m^3/min (2,815 acfm)	1	0

Case CC2A-F – Account 6: Combustion Turbine and Accessories

Equipment No.	Description	Type	Design Condition	Operating Qty.	Spares
1	Combustion Turbine	Advanced F class w/ dry low-NOx burner	240 MW	2	0
2	Combustion Turbine Generator	Hydrogen Cooled	280 MVA @ 0.85 p.f., 18 kV, 60 Hz, 3-phase	2	0

Case CC2A-F – Account 7: HRSG, Ductwork, and Stack

Equipment No.	Description	Type	Design Condition	Operating Qty.	Spares
1	Stack	CS plate, type 409SS liner	46 m (150 ft) high x 5.6 m (19 ft) diameter	2	0
2	Heat Recovery Steam Generator	Drum, multi-pressure with economizer section	Main steam - 295,308 kg/hr, 16.4 MPa/585°C (651,042 lb/hr, 2,379 psig/1,085°F)	2	0

Equipment No.	Description	Type	Design Condition	Operating Qty.	Spares
			Reheat steam - 315,820 kg/hr, 3.5 MPa/585°C (696,262 lb/hr, 501 psig/1,085°F)		
3	CO Catalyst	–	2,150,000 kg/hr (4,730,000 lb/hr)	2	0
4	SCR Reactor	–	2,150,000 kg/hr (4,730,000 lb/hr)	2	0
5	SCR Catalyst	–	Space available for an additional catalyst layer	1 layer	0
6	Dilution Air Blowers	Centrifugal	17 m^3/min @ 108 cm WG (600 scfm @ 42 in WG)	2	1
7	Ammonia Feed Pump	Centrifugal	3.5 lpm @ 90 m H_2O (0.9 gpm @ 300 ft H_2O)	2	1
8	Ammonia Storage Tank	Horizontal tank	102,000 liter (27,000 gal)	1	0

Case CC2A-F – Account 8: Steam Turbine and Accessories

Equipment No.	Description	Type	Design Condition	Operating Qty.	Spares
1	Steam Turbine	Commercially available advanced steam turbine	278 MW 16.4 MPa/585°C/585°C (2379 psig/ 1085°F/1085.126°F)	1	0
2	Steam Turbine Generator	Hydrogen cooled, static excitation	330 MVA @ 0.85 p.f., 18 kV, 60 Hz, 3-phase	1	0
3	Air-cooled Condenser	Forced draft, direct, A-frame air-cooled condenser	1,650 GJ/hr (1,560 MMBtu/hr), Condensing temperature 46°C (115°F), Ambient temperature 15°C (59°F)	1	0
4	Steam Bypass	One per HRSG	50% steam flow @ design steam conditions	2	0

Case CC2A-F – Account 9: Cooling Water System

Equipment No.	Description	Type	Design Condition	Operating Qty.	Spares
1	Glycol Cooling Loops	Industrial grade, air to glycol, closed loop heat exchanger	10 GJ/hr (5 MMBtu/hr) heat duty	5	0

Case CC2A-F – Account 11: Accessory Electric Plant

Equipment No.	Description	Type	Design Condition	Operating Qty.	Spares
1	CTG Transformer	Oil-filled	18 kV/345 kV, 280 MVA, 3-ph, 60 Hz	2	0
2	STG Transformer	Oil-filled	18 kV/345 kV, 320 MVA, 3-ph, 60 Hz	1	0
3	Medium Voltage Transformer	Oil-filled	18 kV/4.16 kV, 10 MVA, 3-ph, 60 Hz	1	1
4	Low Voltage Transformer	Dry ventilated	4.16 kV/480 V, 2 MVA, 3-ph, 60 Hz	1	1
5	CTG Isolated Phase Bus Duct and Tap Bus	Aluminum, self-cooled	18 kV, 3-ph, 60 Hz	2	0
6	STG Isolated Phase Bus Duct and Tap Bus	Aluminum, self-cooled	18 kV, 3-ph, 60 Hz	1	0
7	Medium Voltage Switchgear	Metal clad	4.16 kV, 3-ph, 60 Hz	1	1
8	Low Voltage Switchgear	Metal enclosed	480 V, 3-ph, 60 Hz	1	1

Equipment No.	Description	Type	Design Condition	Operating Qty.	Spares
9	Emergency Diesel Generator	Sized for emergency shutdown	750 kW, 480 V, 3-ph, 60 Hz	1	0

Case CC2A-F – Account 12: Instrumentation and Control

Equipment No.	Description	Type	Design Condition	Operating Qty.	Spares
1	DCS - Main Control	Monitor/keyboard; Operator printer (laser color); Engineering printer (laser B&W)	Operator stations/printers and engineering stations/printers	1	0
2	DCS - Processor	Microprocessor with redundant input/output	N/A	1	0
3	DCS - Data Highway	Fiber optic	Fully redundant, 25% spare	1	0

3.5.17 Case CC2A-F – Cost Estimating

The cost estimating method was described previously in Section 2.8. Exhibit 3-144 shows a detailed breakdown of the capital costs; Exhibit 3-145 shows the owner's costs, along with the TOC; Exhibit 3-146 shows the initial and annual O&M costs; and Exhibit 3-147 and Exhibit 3-148 show the startup and shutdown costs.

The estimated TPC of Case CC2A-F is $525 million. The project contingency is 13.7 percent of the TPC.

Exhibit 3-144. Case CC2A-F total plant cost details

Case:		CC2A-F	– NGCC F-Class (2x1)				Estimate Type:			Conceptual
									Cost Base:	Dec 2018
Item No.	Description	Equipment Cost	Material Cost	Labor		Bare Erected Cost	Eng'g CM H.O.& Fee	Contingencies		Total Plant Cost
				Direct	Indirect			Process	Project	$/1,000
3		Feedwater & Miscellaneous BOP Systems								
3.1	Feedwater System	$1,826	$3,130	$1,565	$0	$6,521	$1,304	$0	$1,174	$8,999
3.2	Water Makeup & Pretreating	$1,315	$132	$745	$0	$2,192	$438	$0	$526	$3,157
3.3	Other Feedwater Subsystems	$1,037	$340	$323	$0	$1,700	$340	$0	$306	$2,346
3.4	Service Water Systems	$1,151	$2,198	$7,117	$0	$10,467	$2,093	$0	$2,512	$15,072
3.5	Other Boiler Plant Systems	$247	$90	$225	$0	$562	$112	$0	$101	$775
3.6	Natural Gas Pipeline and Start-Up System	$9,324	$401	$301	$0	$10,026	$2,005	$0	$1,805	$13,836
3.7	Waste Water Treatment Equipment	$232	$0	$142	$0	$374	$75	$0	$90	$538
3.9	Miscellaneous Plant Equipment	$15,764	$2,067	$8,011	$0	$25,842	$5,168	$0	$6,202	$37,213
3.10	Miscellaneous Fast Start Plant Equipment	$1,545	$0	$1,030	$0	$2,575	$515	$0	$464	$3,554
	SUBTOTAL 3	**$32,441**	**$8,358**	**$19,459**	**$0**	**$60,259**	**$12,052**	**$0**	**$13,179**	**$85,490**
6		Combustion Turbine & Accessories								
6.1	Combustion Turbine Generator	$66,744	$0	$4,062	$0	$70,806	$14,161	$0	$12,745	$97,712
6.3	Combustion Turbine Accessories	$2,682	$0	$163	$0	$2,845	$569	$0	$512	$3,926
6.4	Compressed Air Piping	$0	$885	$200	$0	$1,086	$217	$0	$195	$1,498
6.5	Combustion Turbine Foundations	$0	$917	$992	$0	$1,909	$382	$0	$458	$2,749
	SUBTOTAL 6	**$69,426**	**$1,803**	**$5,417**	**$0**	**$76,646**	**$15,329**	**$0**	**$13,911**	**$105,886**
7		Ductwork & Stack								
7.1	Heat Recovery Steam Generator	$39,561	$0	$9,890	$0	$49,452	$9,890	$0	$8,901	$68,243
7.2	Heat Recovery Steam Generator Accessories	$16,160	$0	$2,990	$0	$19,150	$3,830	$0	$3,447	$26,428
7.3	Ductwork	$0	$1,013	$704	$0	$1,718	$344	$0	$309	$2,370
7.4	Stack	$4,494	$0	$832	$0	$5,326	$1,065	$0	$959	$7,349
7.5	Heat Recovery Steam Generator, Ductwork & Stack Foundations	$0	$756	$709	$0	$1,465	$293	$0	$351	$2,109
7.6	Selective Catalytic Reduction System	$1,457	$612	$854	$0	$2,923	$585	$0	$526	$4,033
7.7	Carbon Monoxide Reduction System	$0	$190	$127	$0	$316	$63	$0	$57	$437
	SUBTOTAL 7	**$61,672**	**$2,571**	**$16,106**	**$0**	**$80,349**	**$16,070**	**$0**	**$14,551**	**$110,969**
8		Steam Turbine & Accessories								
8.1	Steam Turbine Generator & Accessories	$37,251	$0	$5,455	$0	$42,707	$8,541	$0	$7,687	$58,935
8.2	Steam Turbine Plant Auxiliaries	$146	$0	$334	$0	$481	$96	$0	$87	$663
8.3	Condenser & Auxiliaries[A]	$17,736	$0	$8,510	$0	$26,246	$5,249	$0	$4,724	$36,219
8.4	Steam Piping	$8,489	$0	$3,440	$0	$11,930	$2,386	$0	$2,147	$16,463
8.5	Turbine Generator Foundations	$0	$1,258	$2,078	$0	$3,335	$667	$0	$801	$4,803
8.6	Fast Start Stress Monitoring System	$875	$0	$375	$0	$1,250	$250	$0	$225	$1,725
	SUBTOTAL 8	**$64,498**	**$1,258**	**$20,192**	**$0**	**$85,948**	**$17,190**	**$0**	**$15,671**	**$118,809**
9		Cooling Water System								
9.6	Component Cooling Water System[B]	$341	$0	$262	$0	$602	$120	$0	$108	$831
	SUBTOTAL 9	**$341**	**$0**	**$262**	**$0**	**$602**	**$120**	**$0**	**$108**	**$831**
11		Accessory Electric Plant								

Case:		CC2A-F	– NGCC F-Class (2x1)					Estimate Type:		Conceptual
								Cost Base:		Dec 2018
Item No.	Description	Equipment Cost	Material Cost	Labor		Bare Erected Cost	Eng'g CM H.O.& Fee	Contingencies		Total Plant Cost
				Direct	Indirect			Process	Project	$/1,000
11.1	Generator Equipment	$2,600	$0	$1,962	$0	$4,562	$912	$0	$821	$6,295
11.2	Station Service Equipment	$2,773	$0	$238	$0	$3,011	$602	$0	$542	$4,155
11.3	Switchgear & Motor Control	$3,959	$0	$687	$0	$4,646	$929	$0	$836	$6,412
11.4	Conduit & Cable Tray	$0	$957	$2,757	$0	$3,714	$743	$0	$669	$5,125
11.5	Wire & Cable	$0	$1,428	$2,553	$0	$3,982	$796	$0	$717	$5,495
11.6	Protective Equipment	$94	$0	$325	$0	$419	$84	$0	$75	$578
11.7	Standby Equipment	$656	$0	$606	$0	$1,262	$252	$0	$227	$1,741
11.8	Main Power Transformers	$6,940	$0	$142	$0	$7,081	$1,416	$0	$1,275	$9,772
11.9	Electrical Foundations	$0	$95	$241	$0	$336	$67	$0	$81	$483
	SUBTOTAL 11	**$17,022**	**$2,480**	**$9,510**	**$0**	**$29,012**	**$5,802**	**$0**	**$5,242**	**$40,057**
12		**Instrumentation & Control**								
12.1	Natural Gas Combined Cycle Control Equipment	$203	$0	$129	$0	$333	$67	$0	$60	$459
12.2	Combustion Turbine Control Equipment	$390	$0	$248	$0	$638	$128	$0	$115	$881
12.3	Steam Turbine Control Equipment	$326	$0	$207	$0	$533	$107	$0	$96	$736
12.4	Other Major Component Control Equipment	$547	$0	$348	$0	$895	$179	$0	$161	$1,234
12.5	Signal Processing Equipment	$456	$0	$14	$0	$470	$94	$0	$85	$648
12.6	Control Boards, Panels & Racks	$121	$0	$74	$0	$194	$39	$0	$35	$268
12.7	Distributed Control System Equipment	$6,697	$0	$204	$0	$6,901	$1,380	$0	$1,242	$9,524
12.8	Instrument Wiring & Tubing	$553	$442	$1,769	$0	$2,764	$553	$0	$498	$3,815
12.9	Other Instrumentation & Controls Equipment	$383	$0	$887	$0	$1,270	$254	$0	$229	$1,752
	SUBTOTAL 12	**$9,675**	**$442**	**$3,881**	**$0**	**$13,998**	**$2,800**	**$0**	**$2,520**	**$19,318**
13		**Improvements to Site**								
13.1	Site Preparation	$0	$529	$11,222	$0	$11,751	$2,350	$0	$2,820	$16,921
13.2	Site Improvements	$0	$1,701	$2,246	$0	$3,946	$789	$0	$947	$5,683
13.3	Site Facilities	$1,632	$0	$1,712	$0	$3,343	$669	$0	$802	$4,814
	SUBTOTAL 13	**$1,632**	**$2,229**	**$15,180**	**$0**	**$19,041**	**$3,808**	**$0**	**$4,570**	**$27,418**
14		**Buildings & Structures**								
14.1	Combustion Turbine Area	$0	$349	$184	$0	$534	$107	$0	$96	$736
14.3	Steam Turbine Building	$0	$3,499	$4,655	$0	$8,154	$1,631	$0	$1,468	$11,252
14.4	Administration Building	$0	$370	$251	$0	$620	$124	$0	$112	$856
14.6	Water Treatment Buildings	$0	$203	$185	$0	$388	$78	$0	$70	$535
14.7	Machine Shop	$0	$553	$353	$0	$906	$181	$0	$163	$1,250
14.8	Warehouse	$0	$430	$260	$0	$690	$138	$0	$124	$952
14.9	Other Buildings & Structures	$0	$315	$228	$0	$543	$109	$0	$98	$749
14.10	Waste Treating Building & Structures	$0	$33	$60	$0	$93	$19	$0	$17	$129
	SUBTOTAL 14	**$0**	**$5,752**	**$6,176**	**$0**	**$11,928**	**$2,386**	**$0**	**$2,147**	**$16,460**
	TOTAL	**$256,708**	**$24,893**	**$96,182**	**$0**	**$377,783**	**$75,557**	**$0**	**$71,899**	**$525,238**

[A]ACC; [B] Component cooling water system consists of a closed loop system and glycol-to-air heat exchangers. The system utilizes a 45 percent solution of glycol and water

Exhibit 3-145. Case CC2A-F owner's costs

Description	$/1,000
Pre-Production Costs	
6 Months All Labor	$3,865
1 Month Maintenance Materials	$587
1 Month Non-fuel Consumables	$130
1 Month Waste Disposal	$0
25% of 1 Months Fuel Cost at 100% CF	$3,842
2% of TPC	$10,505
Total	**$18,929**
Inventory Capital	
60-day supply of consumables at 100% CF	$259
0.5% of TPC (spare parts)	$2,626
Total	**$2,885**
Other Costs	
Initial Cost for Catalyst and Chemicals	$2,625
Land	$300
Other Owner's Costs	$78,786
Financing Costs	$14,181
Total Overnight Costs (TOC)	**$642,945**

Exhibit 3-146. Case CC2A-F initial and annual operating and maintenance costs

Case:	CC2A-F	– NGCC F-Class (2x1)			Cost Base:	Dec 2018
Plant Size (MW, gross):	738		Heat Rate-net (Btu/kWh):		6,452	
Operating & Maintenance Labor						
Operating Labor					**Operating Labor Requirements per Shift**	
Operating Labor Rate (base):	38.50	**$/hour**			Skilled Operator:	1.0
Operating Labor Burden:	30.00	**% of base**			Operator:	2.0
Labor O-H Charge Rate:	25.00	**% of labor**			Foreman:	1.0
					Lab Techs, etc.:	1.0
					Total:	**5.0**
Fixed Operating Costs						
						Annual Cost ($)
					Annual Operating Labor:	$2,192,190
					Maintenance Labor:	$3,991,809
					Administrative & Support Labor:	$1,546,000
					Property Taxes and Insurance:	$10,504,760
					Total:	**$18,234,758**
Variable Operating Costs						
						Annual Cost ($)
					Maintenance Material:	$7,044,368 x CF
Consumables						
	Initial Fill	**Per Day**	**Per Unit**	**Initial Fill**	**Annual Cost ($)**	
Water (gal/1000):	0	6	$1.90	$0	$4,338 x CF	
Makeup and Waste Water Treatment Chemicals (ton):	0	0.019	$550.00	$0	$3,740 x CF	
Ammonia (19 wt%, ton):	0	9.4	$300.00	$0	$1,024,050 x CF	
SCR Catalyst (ft^3):	5,615	3.08	$150.00	$842,189	$168,438 x CF	
CO Catalyst (ft^3):	446	0.24	$4,000.00	$1,783,114	$356,623 x CF	
Subtotal:				**$2,625,303**	**$1,557,189 x CF**	
Waste Disposal						
SCR Catalyst (ft^3):	0	3.08	$2.50	$0	$2,807 x CF	
CO Catalyst (ft^3):	0	0.24	$2.50	$0	$223 x CF	
Subtotal:				**$0**	**$3,030 x CF**	
				Variable Operating Costs Total:	**$2,625,303**	**$8,604,587 x CF**
Fuel Cost						
Natural Gas (MMBtu):	0	114,323	$4.42	$0	$184,437,511 x CF	
				Fuel Costs Total:	**$0**	**$184,437,511 x CF**

Exhibit 3-147. Case CC2A-F synchronization startup and shutdown costs

Event to Synchronization		Hot Start	Warm Start	Cold Start	Shutdown
Energy and Duration					
Energy Produced	MWh	-	-	-	-
Duration	Min	5	5	5	58
NG Heat Input (HHV)	MMBtu	320	320	320	40
House Energy Consumed	MWh	0.9	0.9	0.9	0.1
Aux Boiler Heat Input (HHV)	MMBtu	-	200	400	-
Costs					
Energy Sold Cost	$	-	-	-	-
Variable O&M Cost	$	60	60	60	10
Natural Gas Cost	$	1,410	2,300	3,180	180
House Energy Cost	$	50	50	50	10
Total Cost for Event	**$**	**1,520**	**2,410**	**3,290**	**200**

Exhibit 3-148. Case CC2A-F full load startup and shutdown costs

Event to Full Load		Hot Start	Warm Start	Cold Start	Shutdown
Energy and Duration					
Energy Produced	MWh	137.1	247.3	435.3	92.7
Duration	Min	32	45	120	70
NG Heat Input (HHV)	MMBtu	1,552	2,495	7,729	822
House Energy Consumed	MWh	4.2	6.8	21.1	2.2
Aux Boiler Heat Input (HHV)	MMBtu	-	400	800	-
Costs					
Energy Sold Cost	$	(8,200)	(14,800)	(26,100)	(5,600)
Variable O&M Cost	$	300	500	1,400	100
Natural Gas Cost	$	6,900	12,800	37,700	3,600
House Energy Cost	$	300	400	1,300	100
Total Cost for Event	**$**	**(700)**	**(1,100)**	**14,300**	**(1,800)**

3.5.18 Case CC2A-FC – Cost Estimating

The cost estimating method was described previously in Section 2.8. Exhibit 3-149 shows a detailed breakdown of the capital costs; Exhibit 3-150 shows the owner's costs, along with the TOC; Exhibit 3-151 shows the initial and annual O&M costs; and Exhibit 3-152 and Exhibit 3-153 show the startup and shutdown costs.

The primary difference between the capital costs of Case CC1A-FC and CC1A-F is the absence of cost accounts 3.10 and 8.6, which are systems specifically associated with fast start operation.

The estimated TPC of Case CC2A-FC is $517 million. The project contingency is 13.7 percent of the TPC.

Exhibit 3-149. Case CC2A-FC total plant cost details

Case:		CC2A-FC	– NGCC F-Class (2x1) Conventional Start				Estimate Type:			Conceptual
									Cost Base:	Dec 2018
Item No.	Description	Equipment Cost	Material Cost	Labor		Bare Erected Cost	Eng'g CM H.O.& Fee	Contingencies		Total Plant Cost
				Direct	Indirect			Process	Project	$/1,000
	3					**Feedwater & Miscellaneous BOP Systems**				
3.1	Feedwater System	$1,826	$3,130	$1,565	$0	$6,521	$1,304	$0	$1,174	$8,999
3.2	Water Makeup & Pretreating	$1,315	$132	$745	$0	$2,192	$438	$0	$526	$3,157
3.3	Other Feedwater Subsystems	$1,037	$340	$323	$0	$1,700	$340	$0	$306	$2,346
3.4	Service Water Systems	$1,151	$2,198	$7,117	$0	$10,467	$2,093	$0	$2,512	$15,072
3.5	Other Boiler Plant Systems	$247	$90	$225	$0	$562	$112	$0	$101	$775
3.6	Natural Gas Pipeline and Start-Up System	$9,324	$401	$301	$0	$10,026	$2,005	$0	$1,805	$13,836
3.7	Waste Water Treatment Equipment	$232	$0	$142	$0	$374	$75	$0	$90	$538
3.9	Miscellaneous Plant Equipment	$15,764	$2,067	$8,011	$0	$25,842	$5,168	$0	$6,202	$37,213
3.10	Open	$0	$0	$0	$0	$0	$0	$0	$0	$0
	SUBTOTAL 3	**$29,676**	**$8,198**	**$17,809**	**$0**	**$55,684**	**$11,137**	**$0**	**$12,236**	**$79,056**
	6					**Combustion Turbine & Accessories**				
6.1	Combustion Turbine Generator	$66,744	$0	$4,062	$0	$70,806	$14,161	$0	$12,745	$97,712
6.3	Combustion Turbine Accessories	$2,682	$0	$163	$0	$2,845	$569	$0	$512	$3,926
6.4	Compressed Air Piping	$0	$885	$200	$0	$1,086	$217	$0	$195	$1,498
6.5	Combustion Turbine Foundations	$0	$917	$992	$0	$1,909	$382	$0	$458	$2,749
	SUBTOTAL 6	**$69,426**	**$1,803**	**$5,417**	**$0**	**$76,646**	**$15,329**	**$0**	**$13,911**	**$105,886**
	7					**Ductwork & Stack**				
7.1	Heat Recovery Steam Generator	$39,561	$0	$9,890	$0	$49,452	$9,890	$0	$8,901	$68,243
7.2	Heat Recovery Steam Generator Accessories	$16,160	$0	$2,990	$0	$19,150	$3,830	$0	$3,447	$26,428
7.3	Ductwork	$0	$1,013	$704	$0	$1,718	$344	$0	$309	$2,370
7.4	Stack	$4,494	$0	$832	$0	$5,326	$1,065	$0	$959	$7,349
7.5	Heat Recovery Steam Generator, Ductwork & Stack Foundations	$0	$756	$709	$0	$1,465	$293	$0	$351	$2,109
7.6	Selective Catalytic Reduction System	$1,457	$612	$854	$0	$2,923	$585	$0	$526	$4,033
7.7	Carbon Monoxide Reduction System	$0	$190	$127	$0	$316	$63	$0	$57	$437
	SUBTOTAL 7	**$61,672**	**$2,571**	**$16,106**	**$0**	**$80,349**	**$16,070**	**$0**	**$14,551**	**$110,969**
	8					**Steam Turbine & Accessories**				
8.1	Steam Turbine Generator & Accessories	$37,251	$0	$5,455	$0	$42,707	$8,541	$0	$7,687	$58,935
8.2	Steam Turbine Plant Auxiliaries	$146	$0	$334	$0	$481	$96	$0	$87	$663
8.3	Condenser & Auxiliaries[A]	$17,736	$0	$8,510	$0	$26,246	$5,249	$0	$4,724	$36,219
8.4	Steam Piping	$8,489	$0	$3,440	$0	$11,930	$2,386	$0	$2,147	$16,463
8.5	Turbine Generator Foundations	$0	$1,258	$2,078	$0	$3,335	$667	$0	$801	$4,803
8.6	Open	$0	$0	$0	$0	$0	$0	$0	$0	$0
	SUBTOTAL 8	**$63,623**	**$1,258**	**$19,817**	**$0**	**$84,698**	**$16,940**	**$0**	**$15,446**	**$117,084**
	9					**Cooling Water System**				
9.6	Component Cooling Water System[B]	$341	$0	$262	$0	$602	$120	$0	$108	$831
	SUBTOTAL 9	**$341**	**$0**	**$262**	**$0**	**$602**	**$120**	**$0**	**$108**	**$831**
	11					**Accessory Electric Plant**				

Case:		CC2A-FC	– NGCC F-Class (2x1) Conventional Start				Estimate Type:			Conceptual
							Cost Base:			Dec 2018
Item No.	Description	Equipment Cost	Material Cost	Labor		Bare Erected Cost	Eng'g CM H.O.& Fee	Contingencies		Total Plant Cost
				Direct	Indirect			Process	Project	$/1,000
11.1	Generator Equipment	$2,600	$0	$1,962	$0	$4,562	$912	$0	$821	$6,295
11.2	Station Service Equipment	$2,773	$0	$238	$0	$3,011	$602	$0	$542	$4,155
11.3	Switchgear & Motor Control	$3,959	$0	$687	$0	$4,646	$929	$0	$836	$6,412
11.4	Conduit & Cable Tray	$0	$957	$2,757	$0	$3,714	$743	$0	$669	$5,125
11.5	Wire & Cable	$0	$1,428	$2,553	$0	$3,982	$796	$0	$717	$5,495
11.6	Protective Equipment	$94	$0	$325	$0	$419	$84	$0	$75	$578
11.7	Standby Equipment	$656	$0	$606	$0	$1,262	$252	$0	$227	$1,741
11.8	Main Power Transformers	$6,940	$0	$142	$0	$7,081	$1,416	$0	$1,275	$9,772
11.9	Electrical Foundations	$0	$95	$241	$0	$336	$67	$0	$81	$483
	SUBTOTAL 11	**$17,022**	**$2,480**	**$9,510**	**$0**	**$29,012**	**$5,802**	**$0**	**$5,242**	**$40,057**
	12	**Instrumentation & Control**								
12.1	Natural Gas Combined Cycle Control Equipment	$203	$0	$129	$0	$333	$67	$0	$60	$459
12.2	Combustion Turbine Control Equipment	$390	$0	$248	$0	$638	$128	$0	$115	$881
12.3	Steam Turbine Control Equipment	$326	$0	$207	$0	$533	$107	$0	$96	$736
12.4	Other Major Component Control Equipment	$547	$0	$348	$0	$895	$179	$0	$161	$1,234
12.5	Signal Processing Equipment	$456	$0	$14	$0	$470	$94	$0	$85	$648
12.6	Control Boards, Panels & Racks	$121	$0	$74	$0	$194	$39	$0	$35	$268
12.7	Distributed Control System Equipment	$6,697	$0	$204	$0	$6,901	$1,380	$0	$1,242	$9,524
12.8	Instrument Wiring & Tubing	$553	$442	$1,769	$0	$2,764	$553	$0	$498	$3,815
12.9	Other Instrumentation & Controls Equipment	$383	$0	$887	$0	$1,270	$254	$0	$229	$1,752
	SUBTOTAL 12	**$9,675**	**$442**	**$3,881**	**$0**	**$13,998**	**$2,800**	**$0**	**$2,520**	**$19,318**
	13	**Improvements to Site**								
13.1	Site Preparation	$0	$527	$11,184	$0	$11,711	$2,342	$0	$2,811	$16,864
13.2	Site Improvements	$0	$1,695	$2,238	$0	$3,933	$787	$0	$944	$5,664
13.3	Site Facilities	$1,626	$0	$1,706	$0	$3,332	$666	$0	$800	$4,798
	SUBTOTAL 13	**$1,626**	**$2,222**	**$15,128**	**$0**	**$18,976**	**$3,795**	**$0**	**$4,554**	**$27,326**
	14	**Buildings & Structures**								
14.1	Combustion Turbine Area	$0	$349	$184	$0	$534	$107	$0	$96	$736
14.3	Steam Turbine Building	$0	$3,499	$4,655	$0	$8,154	$1,631	$0	$1,468	$11,252
14.4	Administration Building	$0	$370	$251	$0	$620	$124	$0	$112	$856
14.6	Water Treatment Buildings	$0	$203	$185	$0	$388	$78	$0	$70	$535
14.7	Machine Shop	$0	$553	$353	$0	$906	$181	$0	$163	$1,250
14.8	Warehouse	$0	$430	$260	$0	$690	$138	$0	$124	$952
14.9	Other Buildings & Structures	$0	$315	$228	$0	$543	$109	$0	$98	$749
14.10	Waste Treating Building & Structures	$0	$33	$60	$0	$93	$19	$0	$17	$129
	SUBTOTAL 14	**$0**	**$5,752**	**$6,176**	**$0**	**$11,928**	**$2,386**	**$0**	**$2,147**	**$16,460**
	TOTAL	**$253,062**	**$24,725**	**$94,106**	**$0**	**$371,893**	**$74,379**	**$0**	**$70,715**	**$516,987**

[A]ACC; [B] Component cooling water system consists of a closed loop system and glycol-to-air heat exchangers. The system utilizes a 45 percent solution of glycol and water

Exhibit 3-150. Case CC2A-FC owner's costs

Description	$/1,000
Pre-Production Costs	
6 Months All Labor	$3,826
1 Month Maintenance Materials	$578
1 Month Non-fuel Consumables	$130
1 Month Waste Disposal	$0
25% of 1 Months Fuel Cost at 100% CF	$3,842
2% of TPC	$10,340
Total	**$18,716**
Inventory Capital	
60-day supply of consumables at 100% CF	$259
0.5% of TPC (spare parts)	$2,585
Total	**$2,844**
Other Costs	
Initial Cost for Catalyst and Chemicals	$2,625
Land	$300
Other Owner's Costs	$77,548
Financing Costs	$13,959
Total Overnight Costs (TOC)	**$632,978**

Exhibit 3-151. Case CC2A-FC initial and annual operating and maintenance costs

Case:	CC2A-FC	– NGCC F-Class (2x1) Conventional Start		Cost Base:	Dec 2018
Plant Size (MW, gross):	738	Heat Rate-net (Btu/kWh):		6,452	
Operating & Maintenance Labor					
Operating Labor			**Operating Labor Requirements per Shift**		
Operating Labor Rate (base):	38.50	**$/hour**	Skilled Operator:		1.0
Operating Labor Burden:	30.00	**% of base**	Operator:		2.0
Labor O-H Charge Rate:	25.00	**% of labor**	Foreman:		1.0
			Lab Techs, etc.:		1.0
			Total:		**5.0**
Fixed Operating Costs					
					Annual Cost ($)
			Annual Operating Labor:		$2,192,190
			Maintenance Labor:		$3,929,099
			Administrative & Support Labor:		$1,530,322
			Property Taxes and Insurance:		$10,339,735
			Total:		**$17,991,347**
Variable Operating Costs					
					Annual Cost ($)
			Maintenance Material:		$6,933,705 x CF
Consumables					
	Initial Fill	**Per Day**	**Per Unit**	**Initial Fill**	**Annual Cost ($)**
Water (gal/1000):	0	6	$1.90	$0	$4,338 x CF
Makeup and Waste Water Treatment Chemicals (ton):	0	0.019	$550.00	$0	$3,740 x CF
Ammonia (19 wt%, ton):	0	9.4	$300.00	$0	$1,024,050 x CF
SCR Catalyst (ft^3):	5,615	3.08	$150.00	$842,189	$168,438 x CF
CO Catalyst (ft^3):	446	0.24	$4,000.00	$1,783,114	$356,623 x CF
Subtotal:				**$2,625,303**	**$1,557,189 x CF**
Waste Disposal					
SCR Catalyst (ft^3):	0	3.08	$2.50	$0	$2,807 x CF
CO Catalyst (ft^3):	0	0.24	$2.50	$0	$223 x CF
Subtotal:				**$0**	**$3,030 x CF**
			Variable Operating Costs Total:	**$2,625,303**	**$8,493,924 x CF**
Fuel Cost					
Natural Gas (MMBtu):	0	114,323	$4.42	$0	$184,437,511 x CF
			Fuel Costs Total:	**$0**	**$184,437,511 x CF**

Exhibit 3-152. Case CC2A-FC synchronization startup and shutdown costs

Event to Synchronization		Hot Start	Warm Start	Cold Start	Shutdown
Energy and Duration					
Energy Produced	MWh	-	-	-	-
Duration	min	9	9	9	58
NG Heat Input (HHV)	MMBtu	210	210	210	40
House Energy Consumed	MWh	0.6	0.6	0.6	0.1
Aux Boiler Heat Input (HHV)	MMBtu	-	-	-	-
Costs					
Energy Sold Cost	$	-	-	-	-
Variable O&M Cost	$	40	40	40	10
Natural Gas Cost	$	930	930	930	180
House Energy Cost	$	30	30	30	10
Total Cost for Event	**$**	**1,000**	**1,000**	**1,000**	**200**

Exhibit 3-153. Case CC2A-FC full load startup and shutdown costs

Event to Full Load		Hot Start	Warm Start	Cold Start	Shutdown
Energy and Duration					
Energy Produced	MWh	342.5	422.1	523.8	92.7
Duration	min	90	140	250	70
NG Heat Input (HHV)	MMBtu	3,693	4,280	5,822	822
House Energy Consumed	MWh	10.1	11.7	15.9	2.2
Aux Boiler Heat Input (HHV)	MMBtu	-	-	-	-
Costs					
Energy Sold Cost	$	(20,500)	(25,300)	(31,400)	(5,600)
Variable O&M Cost	$	700	800	1,000	100
Natural Gas Cost	$	16,300	18,900	25,700	3,600
House Energy Cost	$	600	700	1,000	100
Total Cost for Event	**$**	**(2,900)**	**(4,900)**	**(3,700)**	**(1,800)**

3.5.19 Case CC2A-H – Process Description

The process description for Case CC2A-H is the same as CC1A-F (see Section 3.5.3) , with the exception of Case CC2A-F having a 2x1 configuration, compared to Case CC1A-F's 1x1 configuration.

3.5.20 Case CC2A-H – Full Load Performance Results

The BFD for Case CC1-H is shown in Exhibit 3-154. Steam tables that outline process data for the numbered streams in the BFD are provided in Exhibit 3-155. The BFD shows only one of the trains, but the flow rates in the stream table are the total system. The BFD shows only one of the trains, but the flow rates in the stream table are the total system. Full stream tables are only provided for the 100 percent load point.

Exhibit 3-154. Case CC2A-H block flow diagram, NGCC

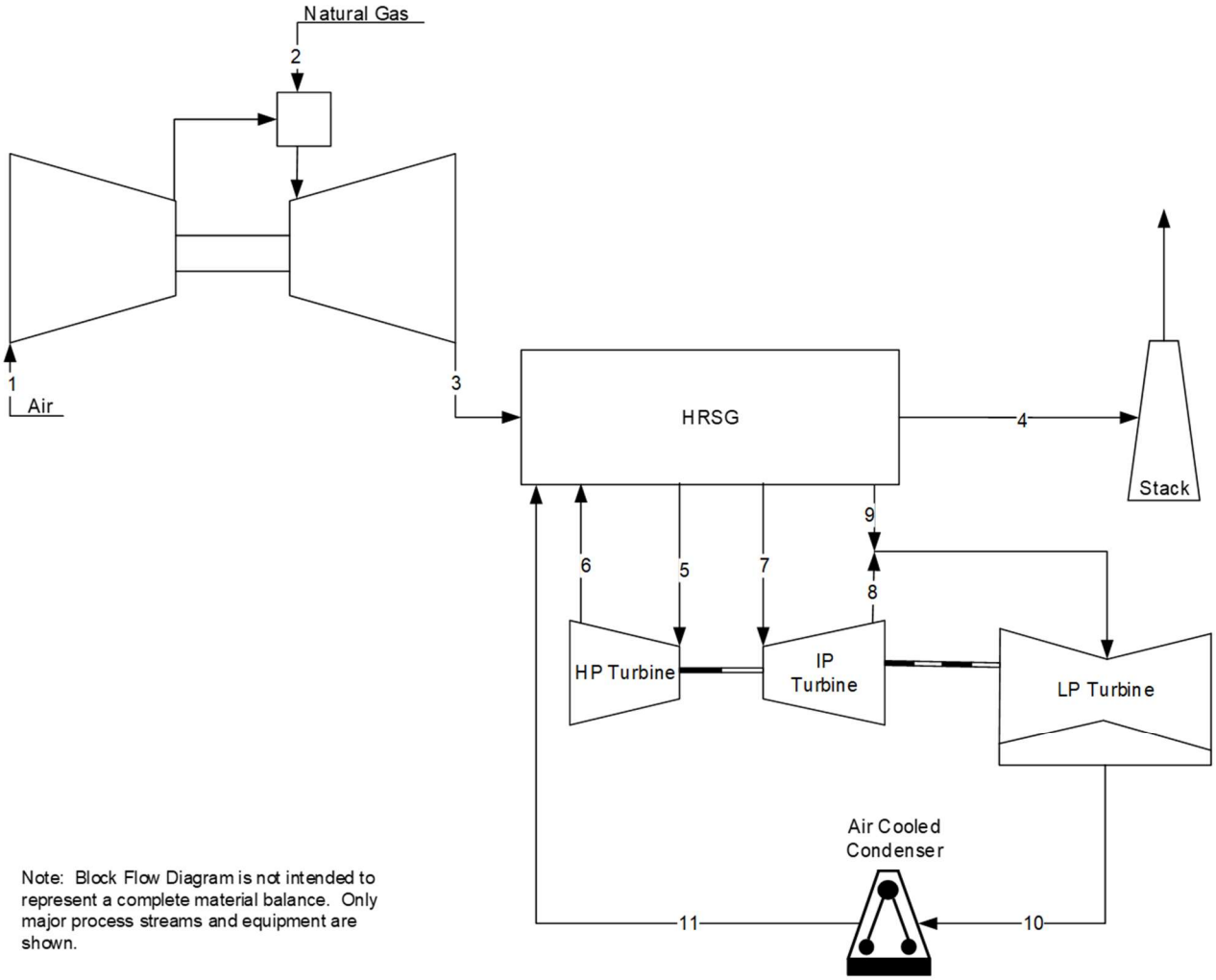

Exhibit 3-155. Case CC2A-H stream table, NGCC

	1	2	3	4	5	6	7	8	9	10	11
V-L Mole Fraction											
Ar	0.0092	0.0000	0.0088	0.0088	0.0000	0.0000	0.0000	0.0000	0.0000	0.0000	0.0000
CH_4	0.0000	0.9310	0.0000	0.0000	0.0000	0.0000	0.0000	0.0000	0.0000	0.0000	0.0000
CH_4S	0.0000	0.0000	0.0000	0.0000	0.0000	0.0000	0.0000	0.0000	0.0000	0.0000	0.0000
C_2H_6	0.0000	0.0320	0.0000	0.0000	0.0000	0.0000	0.0000	0.0000	0.0000	0.0000	0.0000
C_3H_8	0.0000	0.0070	0.0000	0.0000	0.0000	0.0000	0.0000	0.0000	0.0000	0.0000	0.0000
C_4H_{10}	0.0000	0.0040	0.0000	0.0000	0.0000	0.0000	0.0000	0.0000	0.0000	0.0000	0.0000
CO_2	0.0003	0.0100	0.0449	0.0449	0.0000	0.0000	0.0000	0.0000	0.0000	0.0000	0.0000
H_2O	0.0099	0.0000	0.0953	0.0953	1.0000	1.0000	1.0000	1.0000	1.0000	1.0000	1.0000
N_2	0.7732	0.0160	0.7398	0.7398	0.0000	0.0000	0.0000	0.0000	0.0000	0.0000	0.0000
O_2	0.2074	0.0000	0.1112	0.1112	0.0000	0.0000	0.0000	0.0000	0.0000	0.0000	0.0000
SO_2	0.0000	0.0000	0.0000	0.0000	0.0000	0.0000	0.0000	0.0000	0.0000	0.0000	0.0000
Total	1.0000	1.0000	1.0000	1.0000	1.0000	1.0000	1.0000	1.0000	1.0000	1.0000	1.0000
V-L Flowrate, kg_{mol}/hr	178,789	8,002	187,023	187,023	40,697	39,521	44,351	44,311	5,278	49,899	50,025
V-L Flowrate, kg/hr	5,159,315	138,658	5,297,973	5,297,973	733,169	711,986	798,999	798,270	95,086	898,936	901,206
Solids Flowrate, kg/hr	0	0	0	0	0	0	0	0	0	0	0
Temperature, °C	15	27	652	85	585	363	584	307	292	46	46
Pressure, MPa, abs	0.10	3.38	0.11	0.10	16.50	3.96	3.55	0.52	0.51	0.01	0.01
Steam Table Enthalpy, kJ/kg[A]	30.23	17.30	881.55	240.99	3,528.08	3,125.79	3,641.58	3,077.30	3,046.53	2,431.63	193.10
AspenPlus Enthalpy, kJ/kg[B]	-97.58	-4,491.92	-733.23	-1,373.79	-12,452.21	-12,854.50	-12,338.72	-12,902.99	-12,933.76	-13,548.66	-15,787.20
Density, kg/m^3	1.2	25.4	0.4	1.0	45.6	14.5	9.1	2.0	2.0	0.1	989.7
V-L Molecular, Weight	28.857	17.328	28.328	28.328	18.015	18.015	18.015	18.015	18.015	18.015	18.015
V-L Flowrate, lb_{mol}/hr	394,163	17,642	412,316	412,316	89,722	87,129	97,778	97,688	11,636	110,007	110,285
V-L Flowrate, lb/hr	11,374,343	305,688	11,680,031	11,680,031	1,616,362	1,569,661	1,761,492	1,759,883	209,628	1,981,814	1,986,819
Solids Flowrate, lb/hr	0	0	0	0	0	0	0	0	0	0	0
Temperature, °F	59	80	1,206	185	1,085	686	1,083	584	557	115	115
Pressure, psia	14.7	490.0	15.3	14.8	2,393.0	575.0	515.5	75.0	73.5	1.5	1.5
Steam Table Enthalpy, Btu/lb[A]	13.0	7.4	379.0	103.6	1,516.8	1,343.8	1,565.6	1,323.0	1,309.8	1,045.4	83.0
AspenPlus Enthalpy, Btu/lb[B]	-42.0	-1,931.2	-315.2	-590.6	-5,353.5	-5,526.4	-5,304.7	-5,547.3	-5,560.5	-5,824.9	-6,787.3
Density, lb/ft^3	0.076	1.588	0.024	0.061	2.849	0.905	0.571	0.122	0.123	0.005	61.784

[A]Steam table reference conditions are 32.02°F & 0.089 psia

[B]Aspen thermodynamic reference state is the component's constituent elements in an ideal gas state at 25°C and 1 atm

At full load, the plant produces a net output of 1,107 MW at a net plant efficiency of 55.0 percent (HHV basis). Full load performance for Case CC2A-H is summarized in Exhibit 3-156. Exhibit 3-157 presents a detailed breakdown of the auxiliary power requirements at full load.

Exhibit 3-156. Case CC2A-H plant performance summary

Performance Summary	
Combustion Turbine Power, MWe	763
Steam Turbine Power, MWe	361
Total Gross Power, MWe	**1,124**
Nameplate Capacity, MWe	**1,124**
Balance of Plant, kWe	16,713
Total Auxiliaries, MWe	**17**
Net Power, MWe	**1,107**
HHV Net Plant Efficiency, %	55.0%
HHV Net Plant Heat Rate, kJ/kWh (Btu/kWh)	6,549 (6,207)
HHV Combustion Turbine Efficiency, %	37.9%
LHV Net Plant Efficiency, %	60.9%
LHV Net Plant Heat Rate, kJ/kWh (Btu/kWh)	5,911 (5,603)
LHV Combustion Turbine Efficiency, %	41.94%
Steam Turbine Cycle Efficiency, %	38.3%
Steam Turbine Heat Rate, kJ/kWh (Btu/kWh)	9,390 (8,900)
Condenser Duty, GJ/hr (MMBtu/hr)	2,017 (1,912)
Natural Gas Feed Flow, kg/hr (lb/hr)	138,658 (305,688)
HHV Thermal Input, kWt	2,014,190
LHV Thermal Input, kWt	1,818,006
Raw Water Withdrawal, $(m^3/min)/MW_{net}$ (gpm/MW_{net})	0.00 (0.01)
Raw Water Consumption, $(m^3/min)/MW_{net}$ (gpm/MW_{net})	0.00 (0.00)

Exhibit 3-157. Case CC2A-H plant power summary

Power Summary	
Combustion Turbine Power, MWe	763
Steam Turbine Power, MWe	361
Total Gross Power, MWe	**1,124**
Nameplate Total Capacity, MWe	**1,124**
Auxiliary Load Summary	
Air Cooled Condenser Fans	6,039
Ancillary Glycol Cooling Loops, kWe	134
Attemperating Air Fan, kWe	–
Combustion Turbine Auxiliaries, kWe	1,000
Combustion Turbine Water Injection Pump, kWe	–
Condensate Pumps, kWe	200
Feedwater Pumps, kWe	5,170
Ground Water Pumps, kWe	–
Miscellaneous Balance of Plant,[A] kWe	560
Natural Gas Compression, kWe	–
SCR, kWe	9
Steam Turbine Auxiliaries, kWe	191
Transformer Losses, kWe	3,410
Total Auxiliaries, MWe	**17**
Net Power, MWe	**1,107**

[A]Includes plant control systems, lighting, HVAC, and miscellaneous low voltage loads

3.5.20.1 Environmental Performance

The environmental targets for emissions of NOx, SO_2, and PM were presented in Section 2.3. A summary of the plant air emissions for Case CC2A-H is presented in Exhibit 3-158.

Exhibit 3-158. Case CC2A-H air emissions

	kg/GJ (lb/MMBtu)	tonne/year (ton/year)[A]	kg/MWh (lb/MWh)[B]
SO_2	0.000 (0.001)	26 (28)	0.003 (0.006)
NOx	0.002 (0.004)	116 (128)	0.012 (0.026)
Particulate	0.001 (0.003)	94 (103)	0.010 (0.021)
Hg	0.000 (0.000)	0 (0)	0.000 (0.000)
VOC	0.001 (0.002)	48 (53)	0.005 (0.011)
CO	0.001 (0.002)	60 (66)	0.006 (0.013)
CO_2	51 (119)	3,237,104 (3,568,296)	329 (725)
CO_2[C]	-	-	334 (736)

[A]Calculations based on a 100 percent capacity factor
[B]Emissions based on gross power except where otherwise noted
[C]CO_2 emissions based on net power instead of gross power

For the purpose of this report, the natural gas was assumed to contain the domestic average value of total sulfur of 0.34 gr/100 scf ($4.71x10^{-4}$ lb-S/MMBtu). [9] It was also assumed that the added CH_4S was the sole contributor of sulfur to the natural gas. No sulfur capture systems were required.

Uncontrolled NOx emissions from the CT is about 25 ppmvd at 15 percent O_2, which is achieved with a DLN burner in the CTG. An SCR unit then further reduces the NOx concentration to 1.8 ppmvd at 15 percent O_2. [17] [16]

The pipeline natural gas was assumed to contain no Hg or HCl, resulting in zero emissions.

The uncontrolled CO and VOC emissions from this CT are 6.2 ppmvd at 15 percent O_2 and 1.1 ppmvd at 15 percent O_2, respectively. A CO catalyst is used to control the CO emissions to 1.0 ppmvd at 15 percent O_2 and the VOC emissions target of 1.4 ppmvd at 15 percent O_2 does not require further reduction (though the CO catalyst will passively reduce VOC).

The production of PM is a result of system inefficiencies and is not produced or emitted in any significant amount.

CO_2 emissions represent the uncontrolled discharge from the process.

The carbon balance for the plant is shown in Exhibit 3-159. The carbon input to the plant consists of carbon in the natural gas and carbon in the air. Carbon leaves the plant as CO_2 through the stack.

Exhibit 3-159. Case CC2A-H carbon balance

Carbon In		Carbon Out	
	kg/hr (lb/hr)		kg/hr (lb/hr)
Natural Gas	100,150 (220,793)	Stack Gas	100,851 (222,339)
Air (CO_2)	702 (1,547)		
Total	**100,851 (222,339)**	**Total**	**100,851 (222,339)**

As shown in Exhibit 3-160, the sulfur content of the natural gas is insignificant. All sulfur in the natural gas is emitted in the stack gas.

Exhibit 3-160. Case CC2A-H sulfur balance

Sulfur In		Sulfur Out	
	kg/hr (lb/hr)		kg/hr (lb/hr)
Natural Gas	1.5 (3.2)	Stack Gas	1.5 (3.2)
Total	**1.5 (3.2)**	**Total**	**1.5 (3.2)**

Exhibit 3-161 shows the water balance for Case CC2A-H.

Exhibit 3-161. Case CC2A-H water balance

Water Use	Water Demand	Internal Recycle	Raw Water Withdrawal	Process Water Discharge	Raw Water Consumption
	m^3/min (gpm)	m^3/min (gpm)	m^3/min (gpm)	m^3/min (gpm)	m^3/min (gpm)
Steam Packing	–	–	–	0.0 (2.8)	0.0 (-2.8)
Deaerator Vent	–	–	–	0.0 (7.9)	0.0 (-7.9)
Condenser Makeup	**0.0 (11)**	**–**	**0.0 (11)**	**–**	**0.0 (11)**
BFW Makeup	0.0 (11)	–	0.0 (11)	–	0.0 (11)
Total	0.0 (11)	–	0.0 (11)	0.0 (11)	–

3.5.20.2 Energy and Mass Balance Diagrams

An energy and mass balance diagram is shown for Case CC2A-H in Exhibit 3-162.

An overall plant energy balance is provided in tabular form in Exhibit 3-163. The power out is the combined CT and ST power prior to generator losses. The power at the generator terminals (shown in Exhibit 3-156) is calculated by multiplying the power out by the generator efficiency: 98.6 percent for the CT, and 98.6 percent for the ST.

Exhibit 3-162. Case CC2A-H energy and mass balance, NGCC

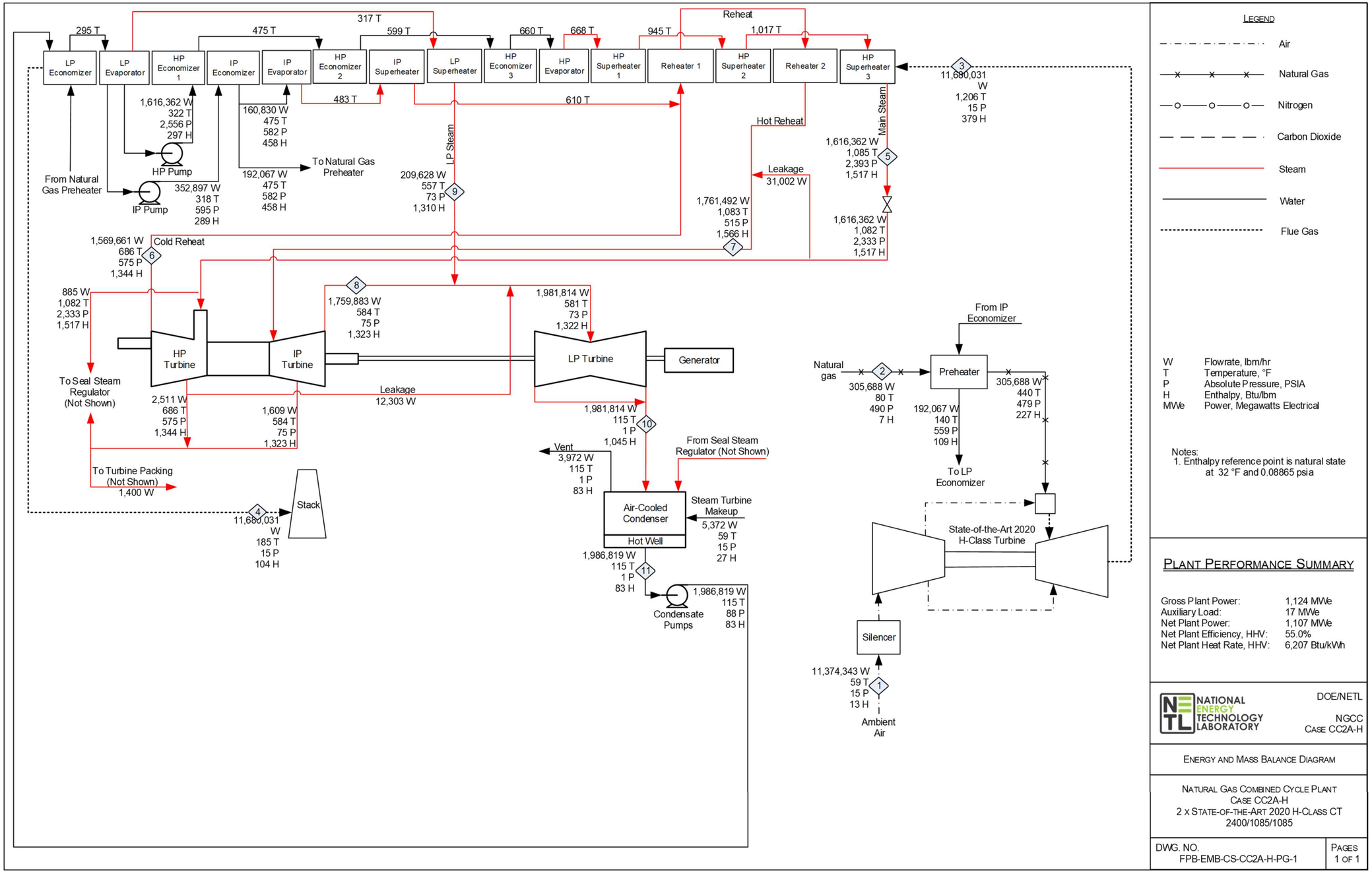

LEGEND

- Air
- Natural Gas
- Nitrogen
- Carbon Dioxide
- Steam
- Water
- Flue Gas

W	Flowrate, lbm/hr
T	Temperature, °F
P	Absolute Pressure, PSIA
H	Enthalpy, Btu/lbm
MWe	Power, Megawatts Electrical

Notes:
1. Enthalpy reference point is natural state at 32 °F and 0.08865 psia

PLANT PERFORMANCE SUMMARY

Gross Plant Power:	1,124 MWe
Auxiliary Load:	17 MWe
Net Plant Power:	1,107 MWe
Net Plant Efficiency, HHV:	55.0%
Net Plant Heat Rate, HHV:	6,207 Btu/kWh

NATIONAL ENERGY TECHNOLOGY LABORATORY

DOE/NETL

NGCC
CASE CC2A-H

ENERGY AND MASS BALANCE DIAGRAM

NATURAL GAS COMBINED CYCLE PLANT
CASE CC2A-H
2 X STATE-OF-THE-ART 2020 H-CLASS CT
2400/1085/1085

DWG. NO.	PAGES
FPB-EMB-CS-CC2A-H-PG-1	1 OF 1

This page intentionally left blank

Exhibit 3-163. Case CC2A-H overall energy balance (0°C [32°F] reference)

	HHV	Sensible + Latent	Power	Total
Heat In GJ/hr (MMBtu/hr)				
Natural Gas	7,251 (6,873)	4.9 (4.6)	–	7,256 (6,877)
Air	–	156 (148)	–	156 (148)
Raw Water Makeup	–	0.2 (0.1)	–	0.2 (0.1)
Auxiliary Power	–	–	60 (57)	60 (57)
TOTAL	**7,251 (6,873)**	**161 (153)**	**60 (57)**	**7,472 (7,082)**
Heat Out GJ/hr (MMBtu/hr)				
Stack Gas	–	1,277 (1,210)	–	1,277 (1,210)
Sulfur	–	–	–	–
Motor Losses and Design Allowances	–	–	56 (54)	56 (54)
Cooling Load[A]	–	2,056 (1,949)	–	2,056 (1,949)
CO_2 Product Stream	–	–	–	–
Deaerator Vent	–	0.3 (0.3)	–	0.3 (0.3)
Ambient Losses[B]	–	*74 (70)*	–	74 (70)
Power	–	–	4,046 (3,835)	4,046 (3,835)
TOTAL	**–**	**3,407 (3,229)**	**4,103 (3,888)**	**7,510 (7,118)**
Unaccounted Energy[C]	**–**	*-38 (-36)*	–	*-38 (-36)*

[A]Includes condenser and miscellaneous cooling loads
[B]Ambient losses include all losses to the environment through radiation, convection, etc. Sources of these losses include the combustor, reheater, superheater, and transformers
[C]By difference

3.5.21 Case CC2A-H – Part Load Performance Results

Plant performance results are summarized at each discrete load point in Exhibit 3-164. Exhibit 3-165 displays a detailed breakdown of the auxiliary power requirement at each discrete load point. Air emissions at each discrete load point are summarized in Exhibit 3-166. The results presented in this section are reflective of steady-state operation. Performance associated with specific operating profiles (e.g., load-following, peaking) will differ.

Exhibit 3-164. Case CC2A-H part load plant performance summary

Performance Summary				
Percent Load, % of CTG Gross Output	**100%**	**75%**	**50%**	**30%**
Combustion Turbine Power, MWe	763	573	382	229
Steam Turbine Power, MWe	361	295	242	195
Total Gross Power, MWe	**1,124**	**868**	**624**	**425**
Nameplate Capacity, MWe	**1,124**	**1,124**	**1,124**	**1,124**
Total Auxiliaries, MWe	**17**	**13**	**10**	**7**
Total Auxiliaries, % of Gross Power	**1.5%**	**1.5%**	**1.5%**	**1.6%**
Net Power, MWe	**1,107**	**855**	**614**	**418**
HHV Net Plant Efficiency, %	55.0%	54.1%	51.2%	47.1%
HHV Net Plant Heat Rate, kJ/kWh (Btu/kWh)	6,549 (6,207)	6,654 (6,307)	7,034 (6,667)	7,650 (7,250)
HHV Combustion Turbine Efficiency, %	37.9%	36.2%	31.8%	25.8%
LHV Net Plant Efficiency, %	60.9%	59.9%	56.7%	52.1%
LHV Net Plant Heat Rate, kJ/kWh (Btu/kWh)	5,911 (5,603)	6,006 (5,693)	6,349 (6,018)	6,905 (6,544)
LHV Combustion Turbine Efficiency, %	41.9%	40.1%	35.3%	28.6%
Steam Turbine Cycle Efficiency, %	38.3%	38.2%	37.8%	37.1%
Steam Turbine Heat Rate, kJ/kWh (Btu/kWh)	9,390 (8,900)	9,413 (8,922)	9,526 (9,029)	9,712 (9,205)
Condenser Duty, GJ/hr (MMBtu/hr)	2,017 (1,912)	1,651 (1,565)	1,379 (1,307)	1,151 (1,091)
Natural Gas Feed Flow, kg/hr (lb/hr)	138,658 (305,688)	108,765 (239,787)	82,594 (182,089)	61,084 (134,667)
HHV Thermal Input, kWt	2,014,190	1,579,964	1,199,791	887,325
LHV Thermal Input, kWt	1,818,006	1,426,074	1,082,930	800,899
Raw Water Withdrawal, (m^3/min)/MWnet (gpm/MWnet)	0.00 (0.01)	0.00 (0.01)	0.00 (0.01)	0.00 (0.02)
Raw Water Consumption, (m^3/min)/MWnet (gpm/MWnet)	0.00 (0.00)	0.00 (0.00)	0.00 (0.00)	0.00 (0.00)

Exhibit 3-165. Case CC2A-H part load plant power summary

Power Summary				
Percent Load, % of CTG Gross Output	**100%**	**75%**	**50%**	**30%**
Combustion Turbine Power, MWe	763	573	382	229
Steam Turbine Power, MWe	361	295	242	195
Total Gross Power, MWe	**1,124**	**868**	**624**	**425**
Nameplate Capacity, MWe	**1,124**	**1,124**	**1,124**	**1,124**
Auxiliary Load Summary				
Air Cooled Condenser Fans	6,039	4,890	3,593	2,434
Ancillary Glycol Cooling Loops, kWe	134	134	134	134
Attemperating Air Fan, kWe	–	–	–	–
Combustion Turbine Auxiliaries, kWe	1,000	1,000	1,000	1,000
Combustion Turbine Water Injection Pump, kWe	–	–	–	–
Condensate Pumps, kWe	200	130	90	60
Feedwater Pumps, kWe	5,170	3,420	2,340	1,590
Ground Water Pumps, kWe	–	–	–	–
Miscellaneous Balance of Plant,[A] kWe	560	433	311	212
Natural Gas Compression, kWe	–	–	–	–
SCR, kWe	9	8	7	5
Steam Turbine Auxiliaries, kWe	191	191	191	191
Transformer Losses, kWe	3,410	2,630	1,890	1,290
Total Auxiliaries, MWe	**17**	**13**	**10**	**7**
Net Power, MWe	**1,107**	**855**	**614**	**418**

[A]Includes plant control systems, lighting, HVAC, and miscellaneous low voltage loads

Exhibit 3-166. Case CC2A-H part load air emissions summary

Emissions Summary				
Percent Load, % of CTG Gross Output	**100%**	**75%**	**50%**	**30%**
SO_2, kg/MWh-gross (lb/MWh-gross)	0.003 (0.006)	0.003 (0.006)	0.003 (0.006)	0.003 (0.007)
NOx, kg/MWh-gross (lb/MWh-gross)	0.012 (0.026)	0.012 (0.026)	0.013 (0.028)	0.014 (0.030)
Particulate, kg/MWh-gross (lb/MWh-gross)	0.010 (0.021)	0.012 (0.027)	0.017 (0.038)	0.025 (0.056)
Hg, kg/MWh-gross (lb/MWh-gross)	0.000 (0.000)	0.000 (0.000)	0.000 (0.000)	0.000 (0.000)
VOC, kg/MWh-gross (lb/MWh-gross)	0.005 (0.011)	0.005 (0.011)	0.005 (0.012)	0.006 (0.013)
CO, kg/MWh-gross (lb/MWh-gross)	0.006 (0.013)	0.006 (0.014)	0.007 (0.014)	0.007 (0.016)
CO_2, kg/MWh-gross (lb/MWh-gross)	329 (725)	334 (737)	353 (779)	384 (847)
CO_2, kg/MWh-net (lb/MWh-net)	334 (736)	339 (748)	359 (791)	390 (861)

All emissions are maintained at or below the environmental target emission limits across the entire load range.

Exhibit 3-167 displays the Case CC2A-H itemized efficiencies (HHV net plant efficiency, HHV CT efficiency, and ST cycle efficiency) and normalized auxiliary power consumption across the load range.

Exhibit 3-167. Case CC2A-H part load itemized efficiencies

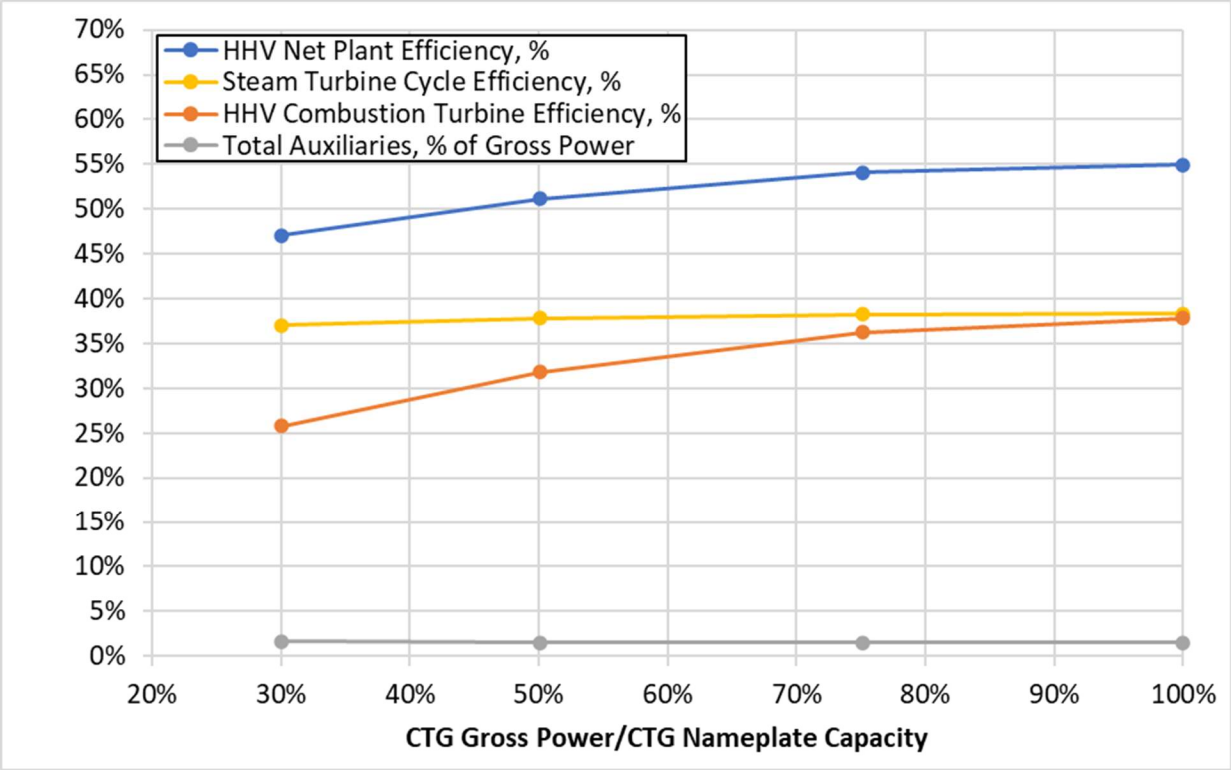

The decrease in part load net plant efficiency is primarily attributable to two key factors: 1) a decrease in the part load CT efficiency, and 2) a decrease in the ST cycle efficiency. The impact on net plant efficiency resulting from the increase in the normalized auxiliary power consumption is minor.

3.5.22 Case CC2A-H – Major Equipment List

Case CC2A-H – Account 3: Feedwater and Miscellaneous Balance of Plant Systems

Equipment No.	Description	Type	Design Condition	Operating Qty.	Spares
1	Demineralized Water Storage Tank	Vertical, cylindrical, outdoor	322,000 liters (85,000 gal)	2	0
2	Condensate Pumps	Vertical canned	16,640 lpm @ 70 m H_2O (4,390 gpm @ 240 ft H_2O)	1	1
3	Boiler Feedwater Pump	Horizontal, split case, multi-stage, centrifugal, with interstage bleed for IP and LP feedwater	HP water: 13,530 lpm @ 2,100 m H_2O (3,580 gpm @ 6,900 ft H_2O) IP water: 2,950 lpm @ 430 m H_2O (780 gpm @ 1,420 ft H_2O)	2	2
4	Auxiliary Boiler	Shop fabricated, water tube	18,000 kg/hr, 2.8 MPa, 343°C (40,000 lb/hr, 400 psig, 650°F)	1	0
5	Service Air Compressors	Flooded Screw	13 m^3/min @ 0.7 MPa (450 scfm @ 100 psig)	2	1
6	Instrument Air Dryers	Duplex, regenerative	13 m^3/min (450 scfm)	2	1
9	Engine-Driven Fire Pump	Vertical turbine, diesel engine	3,785 lpm @ 110 m H_2O (1,000 gpm @ 350 ft H_2O)	1	1
10	Fire Service Booster Pump	Two-stage horizontal centrifugal	2,650 lpm @ 80 m H_2O (700 gpm @ 250 ft H_2O)	1	1
11	Raw Water Pumps	Stainless steel, single suction	140 lpm @ 20 m H_2O (40 gpm @ 60 ft H_2O)	2	1
12	Filtered Water Pumps	Stainless steel, single suction	150 lpm @ 50 m H_2O (40 gpm @ 160 ft H_2O)	2	1
13	Filtered Water Tank	Vertical, cylindrical	145,000 liter (38,000 gal)	1	0
14	Makeup Water Demineralizer	Multi-media filter, cartridge filter, RO membrane assembly and electro-deionization unit	330 lpm (90 gpm)	1	0
15	Liquid Waste Treatment System	–	10 years, 24-hour storm	1	0
16	Gas Pipeline	Underground, coated carbon steel, wrapped cathodic protection	100 m^3/min @ 3.4 MPa (3,530 acfm @ 490 psia) 39 cm (16 in) standard wall pipe	16 km (10 mile)	0
17	Gas Metering Station	–	100 m^3/min (3,530 acfm)	1	0

Case CC2A-H – Account 6: Combustion Turbine and Accessories

Equipment No.	Description	Type	Design Condition	Operating Qty.	Spares
1	Combustion Turbine	Advanced H class w/ dry low-NOx burner	380 MW	2	0
2	Combustion Turbine Generator	Hydrogen Cooled	450 MVA @ 0.85 p.f., 18 kV, 60 Hz, 3-phase	2	0

Case CC2A-H – Account 7: HRSG, Ductwork, and Stack

Equipment No.	Description	Type	Design Condition	Operating Qty.	Spares
1	Stack	CS plate, type 409SS liner	46 m (150 ft) high x 6.6 m (22 ft) diameter	2	0
2	Heat Recovery Steam Generator	Drum, multi-pressure with economizer section	Main steam - 403,244 kg/hr, 16.4 MPa/585°C (888,999 lb/hr, 2,378 psig/1,085°F) Reheat steam - 431,716 kg/hr, 3.5 MPa/585°C (951,770 lb/hr, 501 psig/1,085°F)	2	0
3	CO Catalyst	–	2,910,000 kg/hr (6,420,000 lb/hr)	2	0
4	SCR Reactor	–	2,910,000 kg/hr (6,420,000 lb/hr)	2	0
5	SCR Catalyst	–	Space available for an additional catalyst layer	1 layer	0
6	Dilution Air Blowers	Centrifugal	24 m^3/min @ 108 cm WG (860 scfm @ 42 in WG)	2	1
7	Ammonia Feed Pump	Centrifugal	5.1 lpm @ 90 m H_2O (1.4 gpm @ 300 ft H_2O)	2	1
8	Ammonia Storage Tank	Horizontal tank	147,000 liter (39,000 gal)	1	0

Case CC2A-H – Account 8: Steam Turbine and Accessories

Equipment No.	Description	Type	Design Condition	Operating Qty.	Spares
1	Steam Turbine	Commercially available advanced steam turbine	380 MW 16.4 MPa/585°C/585°C (2378 psig/ 1085°F/1084.99956°F)	1	0
2	Steam Turbine Generator	Hydrogen cooled, static excitation	450 MVA @ 0.85 p.f., 18 kV, 60 Hz, 3-phase	1	0
3	Air-cooled Condenser	Forced draft, direct, A-frame air-cooled condenser	2,220 GJ/hr (2,100 MMBtu/hr), Condensing temperature 46°C (115°F), Ambient temperature 15°C (59°F)	1	0
4	Steam Bypass	One per HRSG	50% steam flow @ design steam conditions	2	0

Case CC2A-H – Account 9: Cooling Water System

Equipment No.	Description	Type	Design Condition	Operating Qty.	Spares
1	Glycol Cooling Loops	Industrial grade, air to glycol, closed loop heat exchanger	10 GJ/hr (7 MMBtu/hr) heat duty	5	0

Case CC2A-H – Account 11: Accessory Electric Plant

Equipment No.	Description	Type	Design Condition	Operating Qty.	Spares
1	CTG Transformer	Oil-filled	18 kV/345 kV, 450 MVA, 3-ph, 60 Hz	2	0
2	STG Transformer	Oil-filled	18 kV/345 kV, 430 MVA, 3-ph, 60 Hz	1	0
3	Medium Voltage Transformer	Oil-filled	18 kV/4.16 kV, 13 MVA, 3-ph, 60 Hz	1	1
4	Low Voltage Transformer	Dry ventilated	4.16 kV/480 V, 2 MVA, 3-ph, 60 Hz	1	1

Equipment No.	Description	Type	Design Condition	Operating Qty.	Spares
5	CTG Isolated Phase Bus Duct and Tap Bus	Aluminum, self-cooled	18 kV, 3-ph, 60 Hz	2	0
6	STG Isolated Phase Bus Duct and Tap Bus	Aluminum, self-cooled	18 kV, 3-ph, 60 Hz	1	0
7	Medium Voltage Switchgear	Metal clad	4.16 kV, 3-ph, 60 Hz	1	1
8	Low Voltage Switchgear	Metal enclosed	480 V, 3-ph, 60 Hz	1	1
9	Emergency Diesel Generator	Sized for emergency shutdown	750 kW, 480 V, 3-ph, 60 Hz	1	0

Case CC2A-H – Account 12: Instrumentation and Control

Equipment No.	Description	Type	Design Condition	Operating Qty.	Spares
1	DCS - Main Control	Monitor/keyboard; Operator printer (laser color); Engineering printer (laser B&W)	Operator stations/printers and engineering stations/printers	1	0
2	DCS - Processor	Microprocessor with redundant input/output	N/A	1	0
3	DCS - Data Highway	Fiber optic	Fully redundant, 25% spare	1	0

3.5.23 Case CC2A-H – Cost Estimating

The cost estimating method was described previously in Section 2.8. Exhibit 3-168 shows a detailed breakdown of the capital costs; Exhibit 3-169 shows the owner's costs, along with the TOC; Exhibit 3-170 shows the initial and annual O&M costs; and Exhibit 3-171 and Exhibit 3-172 show the startup and shutdown costs.

The estimated TPC of Case CC2A-H is $697 million. The project contingency is 13.6 percent of the TPC.

Exhibit 3-168. Case CC2A-H total plant cost details

Case:		CC2A-H	– NGCC H-Class (2x1)				Estimate Type:			Conceptual
									Cost Base:	Dec 2018
Item No.	Description	Equipment Cost	Material Cost	Labor		Bare Erected Cost	Eng'g CM H.O.& Fee	Contingencies		Total Plant Cost
				Direct	Indirect			Process	Project	$/1,000
3						Feedwater & Miscellaneous BOP Systems				
3.1	Feedwater System	$2,285	$3,917	$1,959	$0	$8,161	$1,632	$0	$1,469	$11,262
3.2	Water Makeup & Pretreating	$1,530	$153	$867	$0	$2,549	$510	$0	$612	$3,671
3.3	Other Feedwater Subsystems	$1,298	$426	$404	$0	$2,128	$426	$0	$383	$2,936
3.4	Service Water Systems	$1,533	$2,927	$9,479	$0	$13,939	$2,788	$0	$3,345	$20,073
3.5	Other Boiler Plant Systems	$309	$112	$281	$0	$703	$141	$0	$127	$970
3.6	Natural Gas Pipeline and Start-Up System	$10,925	$470	$352	$0	$11,748	$2,350	$0	$2,115	$16,212
3.7	Waste Water Treatment Equipment	$269	$0	$165	$0	$435	$87	$0	$104	$626
3.9	Miscellaneous Plant Equipment	$18,724	$2,456	$9,515	$0	$30,695	$6,139	$0	$7,367	$44,201
3.10	Miscellaneous Fast Start Plant Equipment	$2,049	$0	$1,366	$0	$3,416	$683	$0	$615	$4,713
	SUBTOTAL 3	**$38,923**	**$10,461**	**$24,389**	**$0**	**$73,773**	**$14,755**	**$0**	**$16,136**	**$104,664**
6						Combustion Turbine & Accessories				
6.1	Combustion Turbine Generator	$116,839	$0	$7,110	$0	$123,949	$24,790	$0	$22,311	$171,050
6.3	Combustion Turbine Accessories	$3,142	$0	$191	$0	$3,334	$667	$0	$600	$4,600
6.4	Compressed Air Piping	$0	$1,037	$235	$0	$1,272	$254	$0	$229	$1,756
6.5	Combustion Turbine Foundations	$0	$1,257	$1,359	$0	$2,616	$523	$0	$628	$3,767
	SUBTOTAL 6	**$119,982**	**$2,295**	**$8,895**	**$0**	**$131,171**	**$26,234**	**$0**	**$23,768**	**$181,173**
7						Ductwork & Stack				
7.1	Heat Recovery Steam Generator	$49,002	$0	$12,251	$0	$61,253	$12,251	$0	$11,026	$84,529
7.2	Heat Recovery Steam Generator Accessories	$20,016	$0	$3,704	$0	$23,720	$4,744	$0	$4,270	$32,734
7.3	Ductwork	$0	$1,264	$878	$0	$2,142	$428	$0	$386	$2,956
7.4	Stack	$5,604	$0	$1,037	$0	$6,641	$1,328	$0	$1,195	$9,165
7.5	Heat Recovery Steam Generator, Ductwork & Stack Foundations	$0	$942	$884	$0	$1,826	$365	$0	$438	$2,630
7.6	Selective Catalytic Reduction System	$1,817	$763	$1,064	$0	$3,645	$729	$0	$656	$5,030
7.7	Carbon Monoxide Reduction System	$0	$237	$158	$0	$395	$79	$0	$71	$544
	SUBTOTAL 7	**$76,440**	**$3,206**	**$19,976**	**$0**	**$99,622**	**$19,924**	**$0**	**$18,042**	**$137,588**
8						Steam Turbine & Accessories				
8.1	Steam Turbine Generator & Accessories	$47,818	$0	$7,002	$0	$54,821	$10,964	$0	$9,868	$75,653
8.2	Steam Turbine Plant Auxiliaries	$184	$0	$420	$0	$604	$121	$0	$109	$833
8.3	Condenser & Auxiliaries[A]	$20,848	$0	$10,003	$0	$30,851	$6,170	$0	$5,553	$42,574
8.4	Steam Piping	$10,994	$0	$4,455	$0	$15,450	$3,090	$0	$2,781	$21,321
8.5	Turbine Generator Foundations	$0	$1,580	$2,609	$0	$4,189	$838	$0	$1,005	$6,032
8.6	Fast Start Stress Monitoring System	$1,099	$0	$471	$0	$1,570	$314	$0	$283	$2,166
	SUBTOTAL 8	**$80,943**	**$1,580**	**$24,961**	**$0**	**$107,484**	**$21,497**	**$0**	**$19,598**	**$148,579**
9						Cooling Water System				
9.6	Component Cooling Water System[B]	$434	$0	$333	$0	$767	$153	$0	$138	$1,059
	SUBTOTAL 9	**$434**	**$0**	**$333**	**$0**	**$767**	**$153**	**$0**	**$138**	**$1,059**

Case:	CC2A-H	– NGCC H-Class (2x1)					Estimate Type:		Conceptual
							Cost Base:		Dec 2018
Item No.	Description	Equipment Cost	Material Cost	Labor		Bare Erected Cost	Eng'g CM H.O.& Fee	Contingencies		Total Plant Cost
				Direct	Indirect			Process	Project	$/1,000
11	Accessory Electric Plant									
11.1	Generator Equipment	$3,299	$0	$2,489	$0	$5,788	$1,158	$0	$1,042	$7,988
11.2	Station Service Equipment	$3,365	$0	$289	$0	$3,653	$731	$0	$658	$5,042
11.3	Switchgear & Motor Control	$4,804	$0	$834	$0	$5,638	$1,128	$0	$1,015	$7,780
11.4	Conduit & Cable Tray	$0	$1,161	$3,346	$0	$4,507	$901	$0	$811	$6,219
11.5	Wire & Cable	$0	$1,733	$3,098	$0	$4,831	$966	$0	$870	$6,667
11.6	Protective Equipment	$114	$0	$395	$0	$508	$102	$0	$92	$702
11.7	Standby Equipment	$796	$0	$735	$0	$1,532	$306	$0	$276	$2,114
11.8	Main Power Transformers	$9,243	$0	$189	$0	$9,431	$1,886	$0	$1,698	$13,015
11.9	Electrical Foundations	$0	$126	$319	$0	$445	$89	$0	$107	$641
	SUBTOTAL 11	**$21,621**	**$3,020**	**$11,693**	**$0**	**$36,333**	**$7,267**	**$0**	**$6,567**	**$50,167**
12	Instrumentation & Control									
12.1	Natural Gas Combined Cycle Control Equipment	$244	$0	$155	$0	$399	$80	$0	$72	$551
12.2	Combustion Turbine Control Equipment	$468	$0	$298	$0	$765	$153	$0	$138	$1,056
12.3	Steam Turbine Control Equipment	$391	$0	$249	$0	$639	$128	$0	$115	$882
12.4	Other Major Component Control Equipment	$655	$0	$417	$0	$1,072	$214	$0	$193	$1,480
12.5	Signal Processing Equipment	$546	$0	$17	$0	$563	$113	$0	$101	$777
12.6	Control Boards, Panels & Racks	$145	$0	$88	$0	$233	$47	$0	$42	$321
12.7	Distributed Control System Equipment	$8,029	$0	$244	$0	$8,273	$1,655	$0	$1,489	$11,417
12.8	Instrument Wiring & Tubing	$663	$530	$2,121	$0	$3,314	$663	$0	$597	$4,573
12.9	Other Instrumentation & Controls Equipment	$459	$0	$1,063	$0	$1,522	$304	$0	$274	$2,101
	SUBTOTAL 12	**$11,599**	**$530**	**$4,652**	**$0**	**$16,781**	**$3,356**	**$0**	**$3,021**	**$23,158**
13	Improvements to Site									
13.1	Site Preparation	$0	$606	$12,855	$0	$13,460	$2,692	$0	$3,230	$19,383
13.2	Site Improvements	$0	$1,948	$2,572	$0	$4,520	$904	$0	$1,085	$6,510
13.3	Site Facilities	$1,869	$0	$1,961	$0	$3,830	$766	$0	$919	$5,515
	SUBTOTAL 13	**$1,869**	**$2,554**	**$17,388**	**$0**	**$21,810**	**$4,362**	**$0**	**$5,235**	**$31,407**
14	Buildings & Structures									
14.1	Combustion Turbine Area	$0	$443	$234	$0	$677	$135	$0	$122	$935
14.3	Steam Turbine Building	$0	$4,220	$5,613	$0	$9,833	$1,967	$0	$1,770	$13,570
14.4	Administration Building	$0	$424	$287	$0	$712	$142	$0	$128	$982
14.6	Water Treatment Buildings	$0	$233	$213	$0	$446	$89	$0	$80	$616
14.7	Machine Shop	$0	$634	$405	$0	$1,039	$208	$0	$187	$1,434
14.8	Warehouse	$0	$493	$298	$0	$791	$158	$0	$142	$1,092
14.9	Other Buildings & Structures	$0	$361	$262	$0	$623	$125	$0	$112	$860
14.10	Waste Treating Building & Structures	$0	$39	$69	$0	$108	$22	$0	$19	$149
	SUBTOTAL 14	**$0**	**$6,848**	**$7,383**	**$0**	**$14,230**	**$2,846**	**$0**	**$2,561**	**$19,638**
	TOTAL	**$351,811**	**$30,493**	**$119,669**	**$0**	**$501,973**	**$100,395**	**$0**	**$95,065**	**$697,433**

[A]ACC; [B]Component cooling water system consists of a closed loop system and glycol-to-air heat exchangers. The system utilizes a 45 percent solution of glycol and water

Exhibit 3-169. Case CC2A-H owner's costs

Description	$/1,000
Pre-Production Costs	
6 Months All Labor	$4,683
1 Month Maintenance Materials	$779
1 Month Non-fuel Consumables	$184
1 Month Waste Disposal	$0
25% of 1 Months Fuel Cost at 100% CF	$5,544
2% of TPC	$13,949
Total	**$25,139**
Inventory Capital	
60-day supply of consumables at 100% CF	$367
0.5% of TPC (spare parts)	$3,487
Total	**$3,854**
Other Costs	
Initial Cost for Catalyst and Chemicals	$3,589
Land	$300
Other Owner's Costs	$104,615
Financing Costs	$18,831
Total Overnight Costs (TOC)	**$853,761**

Exhibit 3-170. Case CC2A-H initial and annual operating and maintenance costs

Case:	CC2A-H	– NGCC H-Class (2x1)			Cost Base:	Dec 2018
Plant Size (MW, gross):	1,107		Heat Rate-net (Btu/kWh):		6,207	
Operating & Maintenance Labor						
Operating Labor				**Operating Labor Requirements per Shift**		
Operating Labor Rate (base):	38.50	**$/hour**		Skilled Operator:		1.0
Operating Labor Burden:	30.00	**% of base**		Operator:		2.0
Labor O-H Charge Rate:	25.00	**% of labor**		Foreman:		1.0
				Lab Techs, etc.:		1.0
				Total:		**5.0**
Fixed Operating Costs						
						Annual Cost ($)
				Annual Operating Labor:		$2,192,190
				Maintenance Labor:		$5,300,491
				Administrative & Support Labor:		$1,873,170
				Property Taxes and Insurance:		$13,948,661
				Total:		**$23,314,512**
Variable Operating Costs						
						Annual Cost ($)
				Maintenance Material:		$9,353,808 x CF
Consumables						
	Initial Fill	**Per Day**	**Per Unit**	**Initial Fill**		**Annual Cost ($)**
Water (gal/1000):	0	8	$1.90	$0		$5,364 x CF
Makeup and Waste Water Treatment Chemicals (ton):	0	0.023	$550.00	$0		$4,626 x CF
Ammonia (19 wt%, ton):	0	13.5	$300.00	$0		$1,476,892 x CF
SCR Catalyst (ft^3):	7,633	4.18	$150.00	$1,144,932		$228,986 x CF
CO Catalyst (ft^3):	611	0.33	$4,000.00	$2,444,382		$488,876 x CF
Subtotal:				**$3,589,314**		**$2,204,745 x CF**
Waste Disposal						
SCR Catalyst (ft^3):	0	4.18	$2.50	$0		$3,816 x CF
CO Catalyst (ft^3):	0	0.33	$2.50	$0		$306 x CF
Subtotal:				**$0**		**$4,122 x CF**
			Variable Operating Costs Total:	**$3,589,314**		**$11,562,675 x CF**
Fuel Cost						
Natural Gas (MMBtu):	0	164,945	$4.42	$0		$266,105,564 x CF
			Fuel Costs Total:	**$0**		**$266,105,564 x CF**

Exhibit 3-171. Case CC2A-H synchronization startup and shutdown costs

Event to Synchronization		Hot Start	Warm Start	Cold Start	Shutdown
Energy and Duration					
Energy Produced	MWh	-	-	-	-
Duration	min	5	5	5	24
NG Heat Input (HHV)	MMBtu	470	470	470	40
House Energy Consumed	MWh	1.2	1.2	1.2	0.1
Aux Boiler Heat Input (HHV)	MMBtu	-	300	600	-
Costs					
Energy Sold Cost	$	-	-	-	-
Variable O&M Cost	$	80	80	80	10
Natural Gas Cost	$	2,080	3,400	4,730	180
House Energy Cost	$	70	70	70	10
Total Cost for Event	**$**	**2,230**	**3,550**	**4,880**	**200**

Exhibit 3-172. Case CC2A-H full load startup and shutdown costs

Event to Full Load		Hot Start	Warm Start	Cold Start	Shutdown
Energy and Duration					
Energy Produced	MWh	205.1	370.1	651.5	138.7
Duration	min	30	70	120	45
NG Heat Input (HHV)	MMBtu	2,051	6,487	11,266	763
House Energy Consumed	MWh	5.1	16.0	27.9	1.9
Aux Boiler Heat Input (HHV)	MMBtu	-	600	1,190	-
Costs					
Energy Sold Cost	$	(12,300)	(22,200)	(39,100)	(8,300)
Variable O&M Cost	$	300	1,100	1,900	100
Natural Gas Cost	$	9,100	31,300	55,100	3,400
House Energy Cost	$	300	1,000	1,700	100
Total Cost for Event	**$**	**(2,600)**	**11,200**	**19,600**	**(4,700)**

3.6 NATURAL GAS CASE SUMMARY

3.6.1 Performance Results

Exhibit 3-173 shows the performance and environmental profile summary for all cases at full and MECL. The performance of Case CC2A-FC is identical to that of CC2A-F and is not presented

in this section. The load points are provided for the combustion generator (CG) output – RICE or CTG – relative to the CG nameplate capacity for all cases; the total plant output (CG + STG) is also provided for all combined cycle cases, for reference.

This page intentionally blank

Exhibit 3-173. Performance summary and environmental profile for NG technologies

Case Name	Simple Cycle												Combined Cycle							
	R6A-S		R6A-E		R12A-S		R12A-E		SC1A		SC2A		CC1A-F		CC1A-H		CC2A-F		CC2A-H	
Load[A], % of CG (CG + STG)	100	10[B]	100	1.6[B]	100	10B	100	0.8[B]	100	15[B]	100	50[B]	100	41 (49)[B]	100	30 (38)[B]	100	42 (50)[B]	100	30 (38)[B]
PERFORMANCE																				
Nameplate Capacity, MWe	113	113	113	113	113	113	113	113	116	116	105	105	375	375	560	560	751	751	1,124	1,124
Gross Power Output, MWe	113	11	113	2	113	11	113	1	116	18	105	52	375	185	560	211	751	372	1,124	425
Auxiliary Power Requirement, MWe	2	0	2	0	1	0	1	0	3	1	2	1	6	3	8	3	12	7	17	7
Total Auxiliaries, % of Gross Power	1.4%	3.1%	1.4%	9.9%	1.3%	2.6%	1.3%	15.6%	2.3%	8.3%	1.8%	2.7%	1.6%	1.8%	1.5%	1.6%	1.6%	1.8%	1.5%	1.6%
Net Power Output, MWe	111	11	111	2	111	11	111	1	114	16	103	51	369	181	552	208	738	365	1,107	418
Natural Gas Flow rate, lb/hr	40,963	7,733	40,963	1,289	41,077	8,028	41,077	669	44,524	12,977	43,243	28,462	105,936	58,179	152,844	67,252	211,872	116,590	305,688	134,667
HHV Thermal Input, kWt	269,908	50,954	269,908	8,492	270,659	52,895	270,659	4,408	293,370	85,506	284,930	187,540	698,017	383,344	1,007,095	443,125	1,396,033	768,216	2,014,190	887,325
Net Plant HHV Efficiency, %	41.3%	21.5%	41.3%	20.0%	41.0%	20.8%	41.0%	18.0%	38.8%	18.8%	36.0%	27.1%	52.8%	47.3%	54.8%	46.9%	52.9%	47.5%	55.0%	47.1%
Net Plant HHV Heat Rate, Btu/kWh	8,262	15,875	8,262	17,084	8,319	16,391	8,319	18,924	8,805	18,187	9,467	12,572	6,461	7,217	6,225	7,279	6,452	7,178	6,207	7,250
Raw Water Withdrawal, gpm	0	0	0	0	0	0	0	0	56	8	0	0	6	5	7	5	9	7	11	7
Process Water Discharge, gpm	0	0	0	0	0	0	0	0	0	0	0	0	6	5	7	5	9	7	11	7
Raw Water Consumption[C], gpm	0	0	0	0	0	0	0	0	56	8	0	0	0	0	0	0	0	0	0	0
CO_2 Emissions, lb/MMBtu	117	105	117	105	116	110	116	110	119	119	119	119	119	119	119	119	119	119	119	119
CO_2 Emissions, lb/MWh-gross	955	1,608	955	1,608	954	1,765	954	1,765	1,020	1,985	1,106	1,457	754	842	727	850	753	837	725	847
SO_2 Emissions, lb/MWh-gross	0.008	0.015	0.008	0.015	0.008	0.015	0.008	0.015	0.008	0.016	0.009	0.012	0.006	0.007	0.006	0.007	0.006	0.007	0.006	0.007
NOx Emissions, lb/MWh-gross	0.095	0.163	0.095	0.163	0.095	0.177	0.095	0.177	0.061	0.119	0.066	0.087	0.027	0.030	0.026	0.031	0.027	0.030	0.026	0.030
PM Emissions, lb/MWh-gross	0.170	0.542	0.170	0.542	0.172	0.606	0.172	0.606	0.041	0.299	0.107	0.212	0.019	0.039	0.021	0.056	0.019	0.039	0.021	0.056
Hg Emissions, lb/MWh-gross[D]	0.000	0.000	0.000	0.000	0.000	0.000	0.000	0.000	0.000	0.000	0.000	0.000	0.000	0.000	0.000	0.000	0.000	0.000	0.000	0.000
VOC Emissions, lb/MWh-gross	0.265	0.452	0.265	0.452	0.265	0.493	0.265	0.493	0.022	0.042	0.024	0.031	0.011	0.013	0.011	0.013	0.011	0.012	0.011	0.013
CO Emissions, lb/MWh-gross	0.285	0.486	0.285	0.486	0.285	0.529	0.285	0.529	0.095	0.185	0.103	0.136	0.014	0.016	0.014	0.016	0.014	0.016	0.013	0.016

[A] Gross Output
[B] Minimum emissions-compliant load
[C] As all plants in this study are dry cooled, the combined cycle cases utilize an air cooled condenser
[D] As discussed in Section 2.3 the pipeline natural gas was assumed to contain no Hg

This page intentionally blank

EPA promulgated a New Source Performance Standard on October 23, 2015, for emissions of CO_2 for new fossil fuel-fired electric utility generating units. [5] The limit set by the regulation was 120 lb CO_2/MMBtu for non-base load CTs (primarily NGSC) and 1,000 lb-CO_2/MWh-gross for baseload CT (primarily NGCC) plants. There are no limits for RICE CO_2 emissions. The December 2018 proposed update to 111(b) does not impact the previously established emissions limit for NGCC plants. [6]

This regulation is always applicable—even during startup and shutdown periods. All cases are compliant with all emissions limits, including CO_2, across all loads assessed.

Exhibit 3-174 presents a comparison of the part load CG efficiencies; the load points are provided for the CG output relative to the CG nameplate capacity for all cases. The curves for CC2A-F and CC2A-H overlap the curves for CC1A-F and CC1A-H, respectively.

Exhibit 3-174. Combustion turbine/reciprocating engine cross case comparison for NG technologies

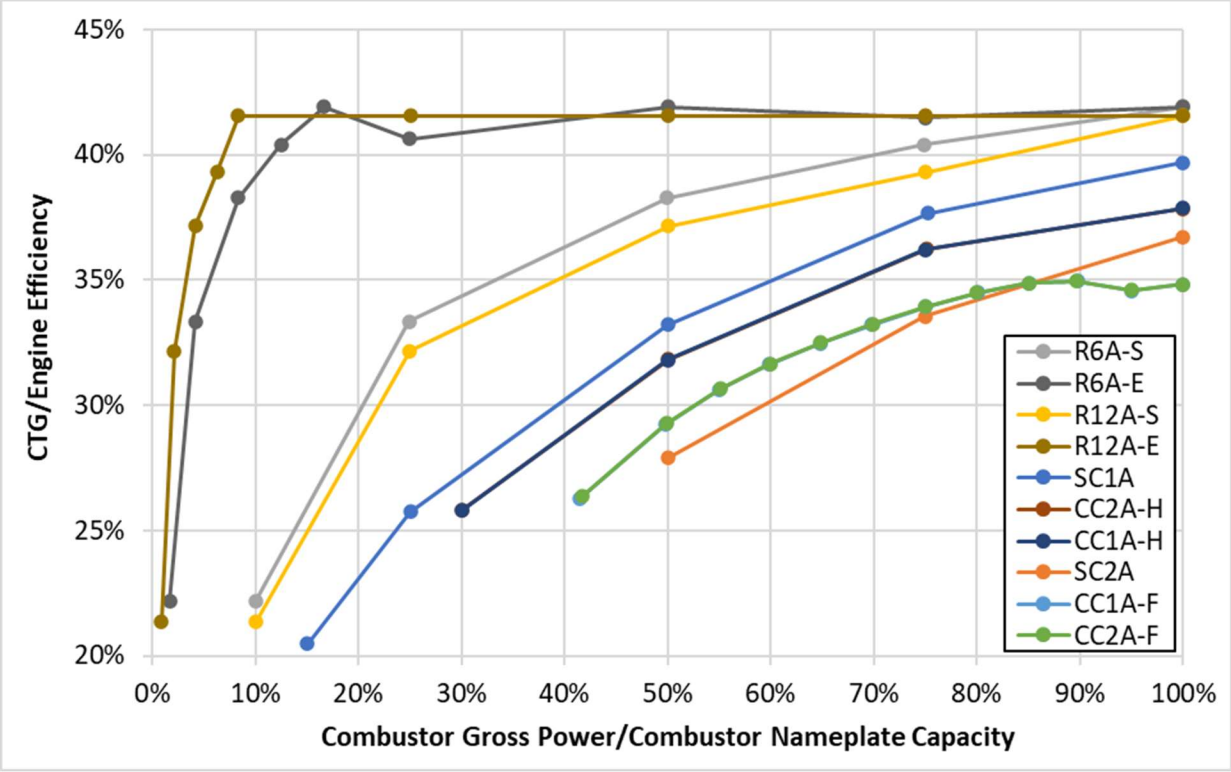

Aside from cases CC1A-F, CC2A-F, R6A-E, and R12A-E the relationship between cases doesn't change significantly across loads. While the F-Class cases have a lower CT efficiency than SC2A at full load, they have a higher partial-load efficiency beginning at approximately 85 percent load.

The initial dip observed in the F-Class cases is the result of the turbine operation being limited by exhaust speed at base load. As parts of the turbine are undersized compared to the advanced compressor capability, the airflow through the IGVs is limited. From full load to approximately 90 percent load, the firing temperature is derated to control exhaust speed,

which reduces the exhaust temperature. From approximately 90 percent load to approximately 60 percent load, the unit is primarily part loaded by closing the IGVs, which increases the exhaust temperature up to the limit of 1215°F. Below approximately 55 percent load the IGVs are closed and the firing temperature is derated to maintain the exhaust temperature at 1215°F.

The performance of each individual RICE unit is identical to that of the collection of RICE units used in each case. This can be observed by comparing the efficiencies of cases R6A-E and R12A-E at loads below 20 percent to the efficiencies of R6A-S and R12A-S. As cases R6A-E and R12A-E turn down each individual unit sequentially, operating as many engines at full-load as possible, these cases achieve the highest CG efficiencies across all common load points. The overall reciprocating engine efficiency of cases R6A-E and R12A-E is the weighted average of the number of operating full load units and the remaining part-load unit.

A graph of the net plant efficiency across the load range for each case is provided in Exhibit 3-175 (HHV basis) and Exhibit 3-176 (LHV basis); the load points are provided for the CG output relative to the CG nameplate capacity for all cases.

Exhibit 3-175. HHV net plant efficiency for NG technologies

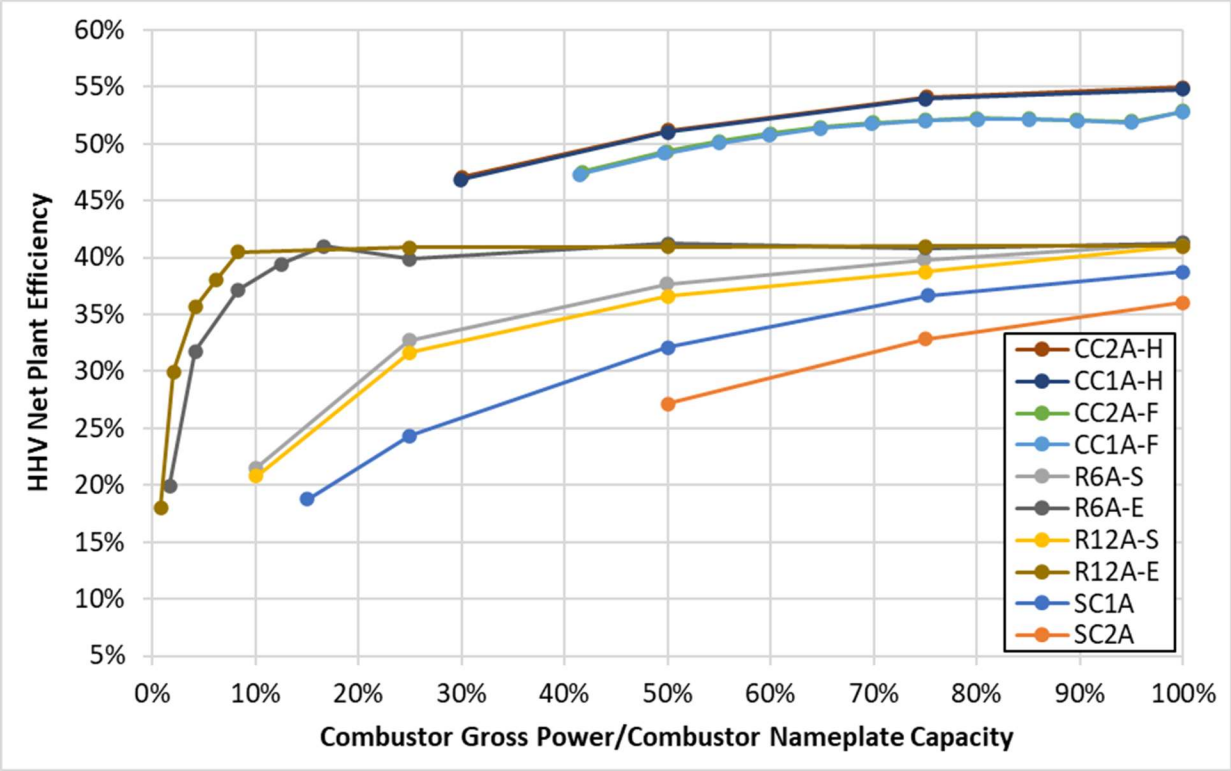

Note: The values of the 2x1 configuration cases (CC2A-H and CC2A-F) overlap with their respective 1x1 configuration cases (CC1A-H and CC1A-F)

Exhibit 3-176. LHV net plant efficiency for NG technologies

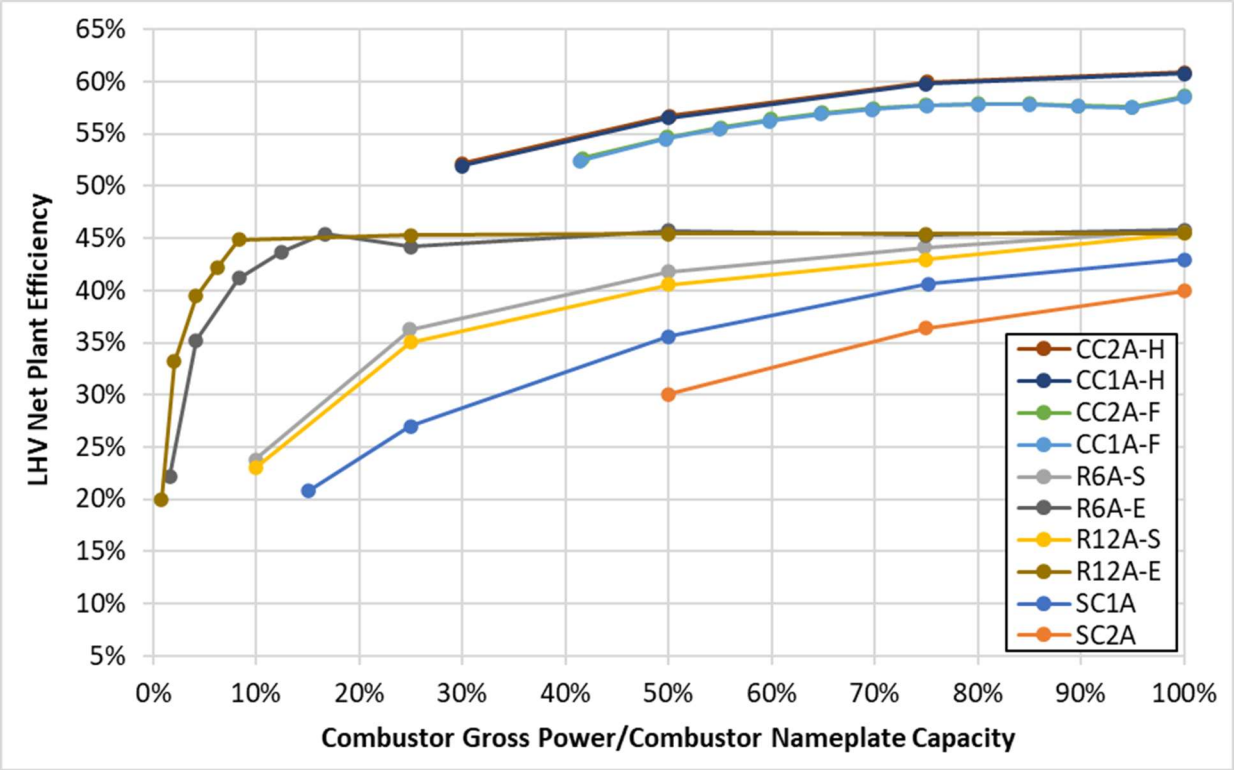

Note: The values of the 2x1 configuration cases (CC2A-H and CC2A-F) overlap with their respective 1x1 configuration cases (CC1A-H and CC1A-F)

While the SC cases have a higher CG efficiency than the CC cases, the added power output from the steam cycle significantly increases the net plant efficiency of the CC cases.

Exhibit 3-177 presents a cumulative case comparison of total normalized auxiliary load (as a percent of gross output) across the load range; the load point percentages are based on the combustion turbine/engine output relative to the CG nameplate capacity for all cases.

Exhibit 3-177. Normalized auxiliary power consumption cross-case comparison for NG technologies

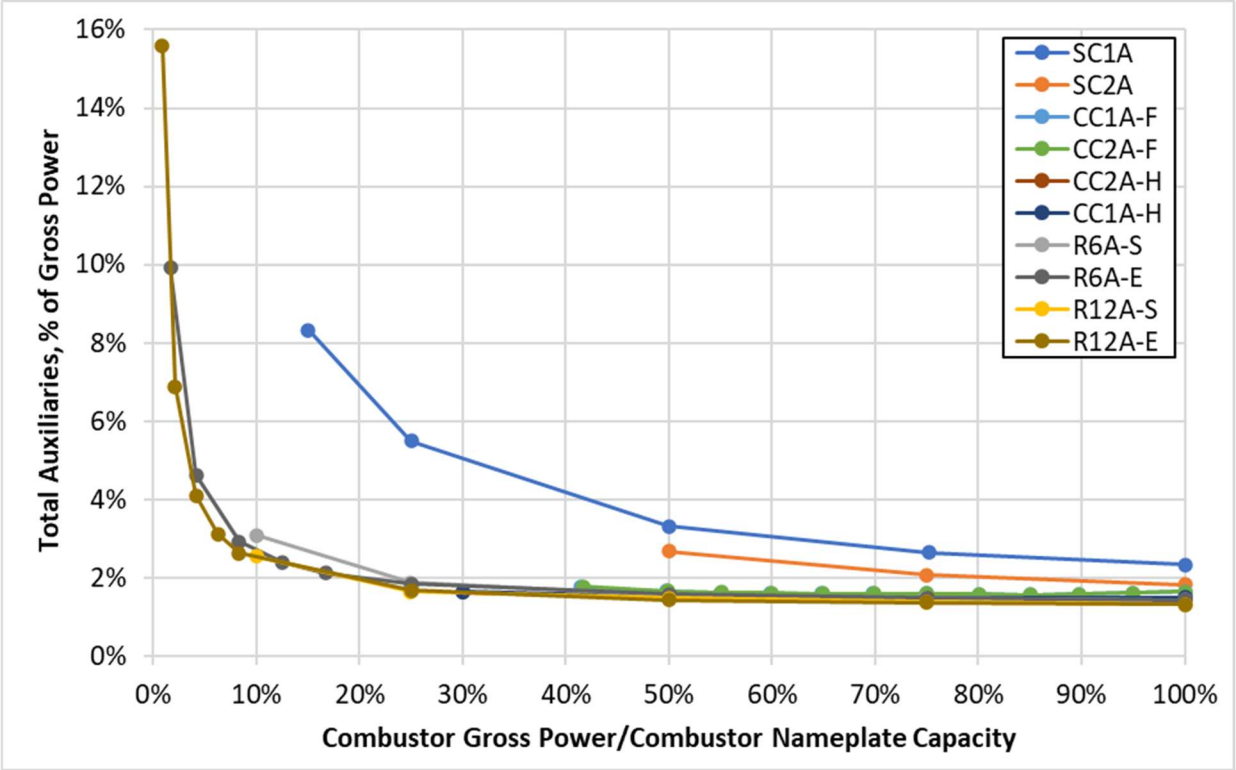

The normalized auxiliary power consumption is comparable for all technologies, with the aeroderivative cases having the largest normalized auxiliary load across all common load ranges, reaching over 8 percent at minimum load. The increased auxiliary load of the aeroderivative cases is primarily due to the necessity to include air attemperation to reduce the exhaust gas temperature below the maximum operating temperature of the SCR.

3.6.2 Flexibility Metric Results Comparison

The flexible capabilities of each natural gas technology are provided in Exhibit 3-178. The flexibility metrics total plant cost and O&M cost were omitted from the quantitative breakpoint table as they are covered in a separate section.

Exhibit 3-178. Flexibility metrics for all NG technologies

Case	R6A-S	R6A-E	R12A-S	R12A-E	SC1A	SC2A	CC1A-F	CC1A-H	CC2A-F	CC2A-FC	CC2A-H
Startup Time[A] to Full Load											
Cold Start to Full Load, Minutes	N/A	N/A	N/A	N/A	N/A	N/A	130	130	120	250	120
Warm Start to Full Load, Minutes	10	10	10	10	10	10	50	85	45	140	70
Hot Start to Full Load, Minutes	5	5	5	5	8	5	35	30	32	90	30
Ramp Rate, MW per Minute	67.9	26.4	67.5	30.0	50.2	99.6	40.1	60.0	80.3	80.3	121.4
MECL, % of Full Load	9.7	1.6	9.7	0.8	16	50	49	38	50	50	38
Design Life, Years[B]	30+	30+	30+	30+	30+	30+	30+	30+	30+	30+	30+
Availability/Reliability											
Equivalent Availability Factor, %	93.6	93.6	90.2	90.2	88.7	86.8	83.7	83.0	85.0	85.0	87.8
Equivalent Forced Outage Rate, %	6.4	6.4	24.6	24.6	28.4	37.5	5.1	4.5	3.6	3.6	1.6
Number of Starts, Per Year	Unlim.	Unlim.	Unlim.	Unlim.	Unlim.	Unlim.	300	300	300	300	300
Minimum Run Time,[C,D] Minutes	1	1	1	1	15	15	120	120	120	120	120
Minimum Downtime,[D,E] Minutes	5	5	5	5	30	30	60	60	60	60	60
Planned Outages											
Plant Maintenance Outage(s) (Spring/Fall)											
Frequency, Outages/Year[F]	1-2	1-2	1-2	1-2	1-2	1-2	1-2	1-2	1-2	1-2	1-2
Duration, Days	1-2	1-2	1-2	1-2	1-3	1-3	1-7	1-7	1-7	1-7	1-7
Plant/Combustion Turbine Generator Overhaul(s)											
Frequency, Years Between Overhauls	5	5	5	5	3-6	3-6	4-8	4-8	4-8	4-8	4-8
Duration, Weeks	1-2	1-2	1-2	1-2	4-6	4-6	3-5	3-5	3-5	3-5	3-5
Steam Turbine Generator Overhaul(s)											
Frequency, Years Between Overhauls	N/A	N/A	N/A	N/A	N/A	N/A	4-8	4-8	4-8	4-8	4-8
Duration, Weeks	N/A	N/A	N/A	N/A	N/A	N/A	3-6	3-6	3-6	3-6	3-6

[A] Cold Start – Offline >48 hours; Warm Start – Offline 8-48 hours, normal start for RICE and aeroderivatives; Hot Start – Offline <8 hours, fast start for RICE and aeroderivatives

[B] Non-baseload operation would need to account for additional costs (e.g., increased maintenance, component replacement) to achieve a design life of 30+ years.

[C] Estimate from the time of generator breaker closure to generator breaker opening. Assumed to be limited by CEMS calibration and reporting period. For CC options, minimum run time includes 60-minute allowance for hot start. A longer minimum run time may be required for other start events

[E] The minimum run time and minimum downtime values represent the technical capabilities of each technology. However, from a practical perspective, the minimum run time and minimum downtime may be limited to an hour to provide sufficient sample time for emissions monitoring. From a dispatch modeling perspective, a minimum run time and minimum downtime of one hour would likely be assumed for the simple cycle combustion turbines.

[D] Estimate from the time of generator breaker opening to generator breaker closure. Assume purge and turning gear operation are achieved within one hour

[F] For RICE cases, the annual outages apply to the BOP maintenance and does not include the hours-based maintenance of the RICE units, which may result in additional outages.

The startup times for the CC options are not limited by the CTGs, rather, their startup times are longer due to thermal soaking of the HRSG(s) and other lagging BOP startup procedures. While the RICE and SC options have higher ramp rates as a percentage of their full loads, the CC options often have higher ramp rates on a MW per minute basis. Due to the complexity of the CC plants, they will typically require slightly longer maintenance outages.

The reduced startup times enabled in the F-Class cases by the inclusion of miscellaneous fast start equipment and monitoring systems is substantial.

The performance of R6A-S and R12A-S is identical to that of R6A-E and R12A-E, respectively. However, the engines in R6A-E and R12A-E are turned down one at a time, whereas the engines in R6A-S and R12A-S are turned down simultaneously. By turning all but one engine off and turning the remaining engine down to the MECL, the minimum loads of cases R6A-E and R12A-E is significantly lower than those of cases R6A-S and R12A-S.

CTG outages include hot gas path inspections approximately every 3–4 years lasting 3–4 weeks and major inspections approximately every 6–8 years lasting 5–6 weeks. Rice outages occur more frequently, with maintenance completed on an annual- and hours-basis. Maintenance tasks on the RICE units occur approximately at intervals every 250 hours, 2,000 hours, 4,000 hours, 6,000 hours, 8,000 hours, 16,000 hours, 20,000 hours, 40,000 hours, and 80,000 hours, with outage durations ranging from a few hours to a few weeks. Additional BOP-focused plant maintenance is performed during the 1-2 planned annual maintenance outages. To the extent practical, the RICE unit hours-based maintenance tasks will be completed during the planned annual maintenance outages. RICE major inspections occur approximately every 5 years lasting 1–2 weeks.

STG minor inspections line up with CTG hot gas path inspections and are about 3 weeks; major inspections line up with CTG major inspections and are about 6 weeks.

RICE and SC aeroderivative options have no limit to number of starts per year as outage maintenance schedule is determined by hours. Combined cycle options, however, are limited in the number of starts that occur in a year. For example, if a unit operates 8,000 hours per year or more, then it could incur up to 300 starts before maintenance would shift from hours-based to starts-based. As the total operating hours decreases, the maximum number of starts also decreases to limit the hours/start ratio.

The availability and reliability metrics are based on a search of NERC-GADS database for the period 2014–2019. The NERC-GADS database does not allow for searching by specific RICE or CTG model or class; therefore, options had to be searched based on criteria such as frame versus aeroderivative versus RICE, SC versus CC, and plant capacity, etc., to get data for the correct group of operating units. Some options had limited data; as all data was included, outlying data can skew the overall data.

3.6.3 Cost Results

The TOC cost components of each case are presented in Exhibit 3-179 and summarized in Exhibit 3-180.

Exhibit 3-179. Total overnight cost, by component, for all NG technologies

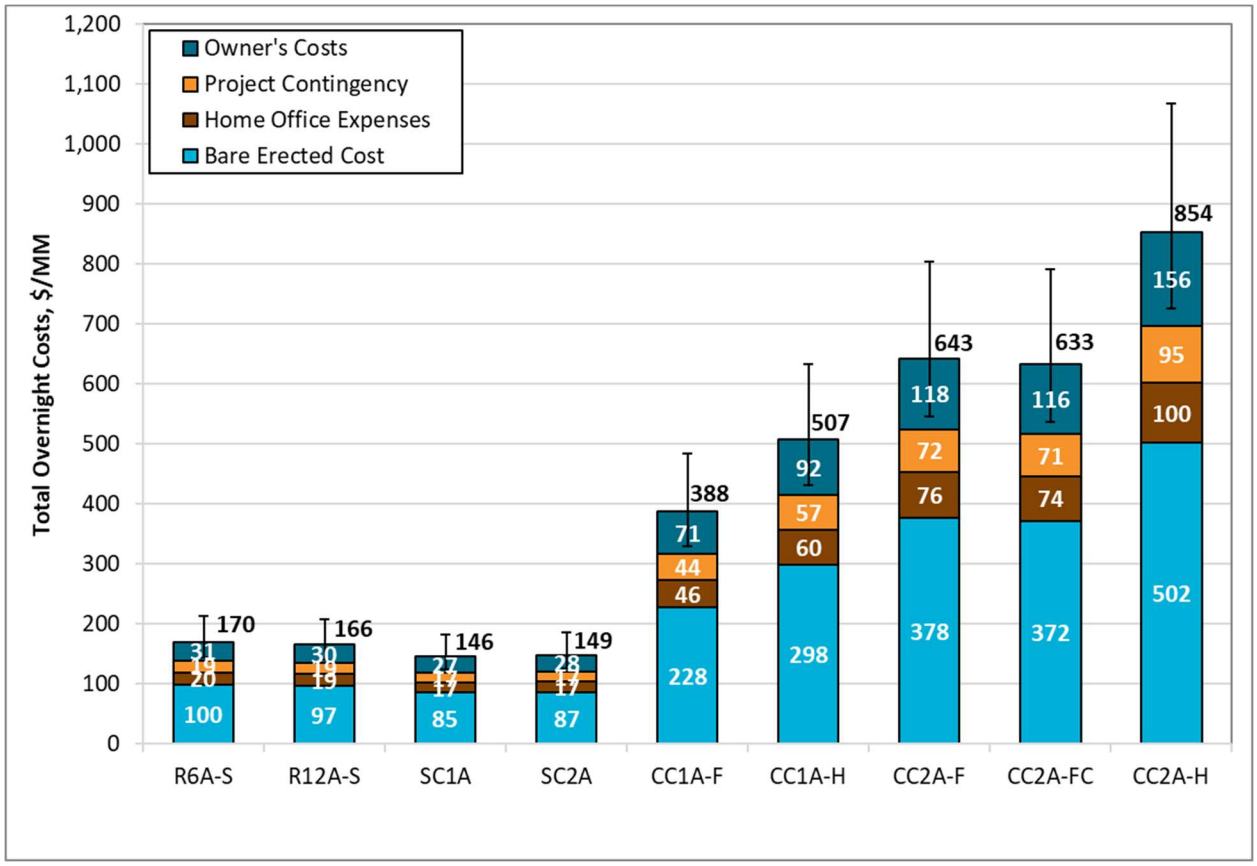

As shown in Exhibit 3-173, the net output of the RICE (R6A-S and R12A-S) and SC aeroderivative (SC1A and SC2A) cases are similar, ranging 103–114 MWe, allowing for reasonable cost comparison. As shown in Exhibit 3-180, the TOC of the RICE plants is 11.7–16.4 percent greater than that of the aeroderivative plants, whereas the fuel costs of the aeroderivative plants are 5.0–8.7 percent greater than the RICE plants. The fixed and variable O&M costs are comparable across technologies, with SC2A having a notably lower (>60 percent) consumable cost, which is driven by the lower uncontrolled NOx emissions of the aeroderivative plants—for Case SC1A, the cost reduction realized by the lower ammonia consumption is overshadowed by the cost of the demineralized water required for the water injected combustors used for NOx reduction.

As cases CC2A-FC and CC2A-F have identical performance, the difference in TOC (1.6 percent) is the result of the inclusion of miscellaneous fast start equipment and monitoring systems.

Exhibit 3-180. Summary of cost components for all NG technologies

Case	Simple Cycle				Combined Cycle				
	R6A-S /R6A-E	R12A-S /R12A-E	SC1A	SC2A	CC1A-F	CC1A-H	CC2A-F	CC2A-FC	CC2A-H
CAPITAL COST									
Total Plant Cost (2018$/MM)	139	136	119	121	317	415	525	517	697
Bare Erected Cost	100	97	85	87	228	298	378	372	502
Home Office Expenses	20	19	17	17	46	60	76	74	100
Project Contingency	19	19	17	17	44	57	72	71	95
Process Contingency	0	0	0	0	0	0	0	0	0
Total Overnight Cost (2018$/MM)	170	166	146	149	388	507	643	633	854
Owner's Costs	31	30	27	28	71	92	118	116	156
O&M COST									
Fixed Costs **(2018$/MM)**	5	6	5	5	12	14	18	18	23
Variable Costs **(2018$/MM)**	3 x CF	3 x CF	3 x CF	2 x CF	5 x CF	7 x CF	9 x CF	8 x CF	12 x CF
Fuel Costs **(2018$/MM)**	36 x CF	36 x CF	39 x CF	38 x CF	92 x CF	133 x CF	184 x CF	184 x CF	266 x CF

[A] The variable and fuel costs are reported on an annual basis at a capacity factor of 100 percent. To calculate these costs for a reduced operation period, multiply the values as indicated. See Exhibit 3-181 for the impact of operating at part-load 100% of the year.

The non-fuel variable O&M and fuel costs are presented as a function of plant load on an hourly basis in Exhibit 3-181 and Exhibit 3-182, respectively. These charts assume that the plant is operating at reduced output 100 percent of the year. If annual output is further reduced, the maintenance materials costs would be reduced. For the RICE cases operating in efficiency mode (R6A-E and R12A-E), it was assumed that the maintenance material costs would decrease proportional to the number of units shut down.

Exhibit 3-181. Non-fuel variable O&M costs as a function of plant load for all NG technologies

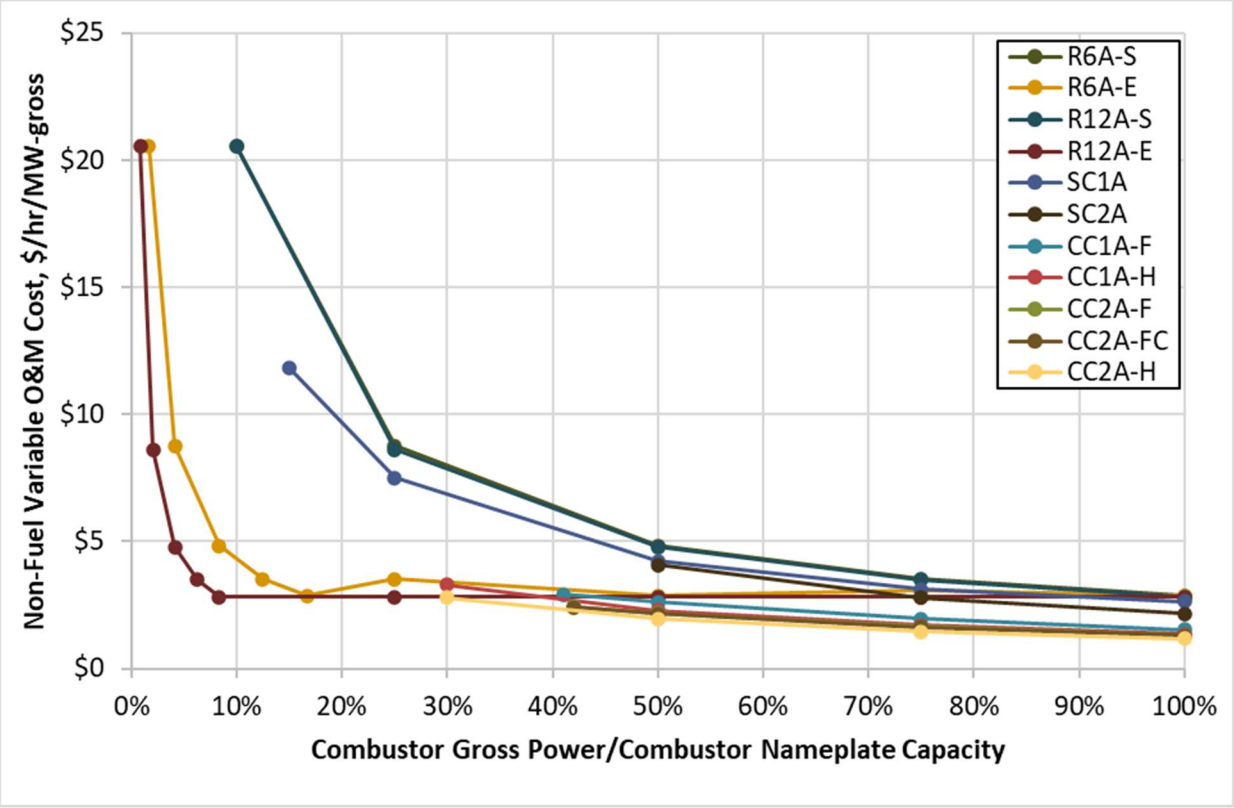

Exhibit 3-182. Fuel costs as a function of plant load for all NG technologies

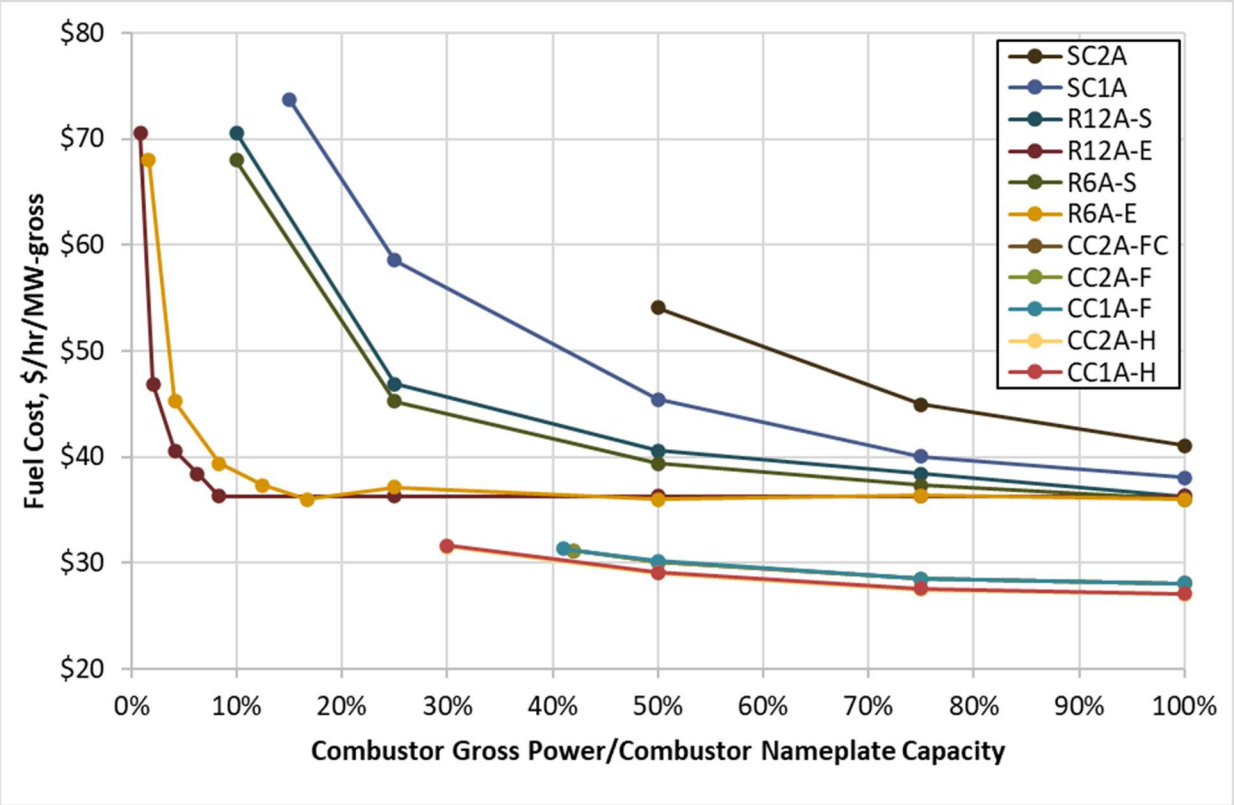

3.6.4 F-Class NGCC Results Comparison

While both Case CC2A-FC from this study and Case B31A from Revision 4 of the Bituminous Baseline [25] are configured as F-Class 2x1 conventional start combined cycle plants, the performance and cost results differ due to 1) differing cooling systems – Case CC2A-FC uses dry cooling and Case B31A uses wet cooling – and 2) differing vintage – Case B31A represents a state-of-the-art 2017 unit, whereas, Case CC2A-FC represents a state-of-the-art 2020 unit.

This section compares the major performance and cost differences between cases CC2A-FC and B31A.

3.6.4.1 Performance Results

Performance results for cases B31A and CC2A-FC are summarized in Exhibit 3-183. Exhibit 3-184 presents a detailed breakdown of the auxiliary power requirements for cases B31A and CC2A-FC. Part load performance results are not provided for either case since part load performance results have not been generated for Case B31A.

Exhibit 3-183. Baseload plant performance summary comparison: Case B31A and Case CC2A-FC

Performance Summary		
Case	**B31A**	**CC2A-FC**
Combustion Turbine Power, MWe	477	486
Steam Turbine Power, MWe	263	265
Total Gross Power, MWe	**740**	**751**
Total Auxiliaries, MWe	**14**	**12**
Net Power, MWe	**727**	**738**
HHV Net Plant Efficiency (%)	53.6%	52.9%
HHV Net Plant Heat Rate, kJ/kWh (Btu/kWh)	6,713 (6,363)	6,807 (6,452)
HHV Combustion Turbine Efficiency, %	35.2%	34.8%
LHV Net Plant Efficiency (%)	59.4%	58.6%
LHV Net Plant Heat Rate, kJ/kWh (Btu/kWh)	6,060 (5,743)	6,144 (5,823)
LHV Combustion Turbine Efficiency, %	39.0%	38.6%
Steam Turbine Cycle Efficiency, %	39.7%	38.1%
Steam Turbine Heat Rate, kJ/kWh (Btu/kWh)	9,074 (8,600)	9,451 (8,958)
Condenser Duty, GJ/hr (MMBtu/hr)	1,405 (1,332)	1,498 (1,420)
Natural Gas Feed Flow, kg/hr (lb/hr)	93,272 (205,630)	96,104 (211,872)
HHV Thermal Input, kWt	1,354,905	1,396,033
LHV Thermal Input, kWt	1,222,936	1,260,058
Raw Water Withdrawal, (m3/min)/MWnet (gpm/MWnet)	0.015 (4.0)	0.00 (0.01)
Raw Water Consumption, (m3/min)/MWnet (gpm/MWnet)	0.012 (3.1)	0.00 (0.00)

Exhibit 3-184. Baseload plant power summary comparison: Case B31A and Case CC2A-FC

Power Summary		
Case	**B31A**	**CC2A-FC**
Combustion Turbine Power, MWe	477	486
Steam Turbine Power, MWe	263	265
Total Gross Power, MWe	**740**	**751**
Nameplate Total Capacity, MWe	**740**	**751**
Auxiliary Load Summary		
Air Cooled Condenser Fans	0	4,486
Ancillary Glycol Cooling Loops, kWe	0	89
Attemperating Air Fan, kWe	0	0
Circulating Water Pumps, kWe	2,810	0
Combustion Turbine Auxiliaries, kWe	1,020	1,050
Combustion Turbine Water Injection Pump, kWe	0	0

Power Summary		
Condensate Pumps, kWe	150	150
Cooling Tower Fans, kWe	1,460	0
CO_2 Capture/Removal Auxiliaries, kWe	0	0
CO_2 Compression, kWe	0	0
Feedwater Pumps, kWe	4,830	3,780
Ground Water Pumps, kWe	260	0
Miscellaneous Balance of Plant[A], kWe	570	374
Natural Gas Compression, kWe	0	0
SCR, kWe	2	6
Steam Turbine Auxiliaries, kWe	200	139
Transformer Losses, kWe	2,250	2,280
Total Auxiliaries, MWe	**14**	**12**
Net Power, MWe	**727**	**738**

[A]Includes plant control systems, lighting, HVAC, and miscellaneous low voltage loads

The different design vintages of cases CC2A-FC and B31A leads to differences in auxiliary loads. Combined, the CT auxiliaries, ST auxiliaries, misc. BOP auxiliaries, and SCR auxiliaries are 13 percent lower in Case CC2A-FC than in Case B31A.

Additionally, Case CC2A-FC uses an ACC, whereas Case B31A uses a recirculating wet cooling tower. A wet cooling tower typically allows for an improvement in net plant efficiency, by way of a reduced condenser operating pressure, but requires substantial water withdrawal and results in significantly higher normalized water consumption (3.1 gpm/MWnet), as shown in Exhibit 3-183. While it is possible to design an ACC to a lower backpressure, a standard ITD was assumed to maintain a similar design methodology and remain geographically agnostic.

Furthermore, use of a recirculating wet cooling tower requires a circulating water system to deliver cooling water to the condenser and auxiliary cooling systems. This circulating water system can be eliminated if an ACC is used in lieu of a wet cooling system. However, glycol cooling loops will still be required for the auxiliary cooling systems. As shown in Exhibit 3-184, the combined auxiliary load of the ACC fans and glycol cooling pumps of Case CC2A-FC is 1 percent greater than the combined auxiliary load of the ground water pumps, cooling tower fans, and circulating water pumps of Case B31A.

The net plant efficiency of Case CC2A-FC is 0.7 percentage points lower than Case B31A. The primary contributor to this delta is the use of dry cooling in Case CC2A-FC, as opposed to the wet cooling system used in Case B31A. A waterfall plot is provided in Exhibit 3-185, which illustrates the primary contributors to the performance delta between cases CC2A-FC and B31A. The efficiencies shown in Exhibit 3-185 are provided on a gross basis to isolate the impacts of the auxiliary loads.

Exhibit 3-185. Baseload plant waterfall plot: Case B31A and Case CC2A-FC

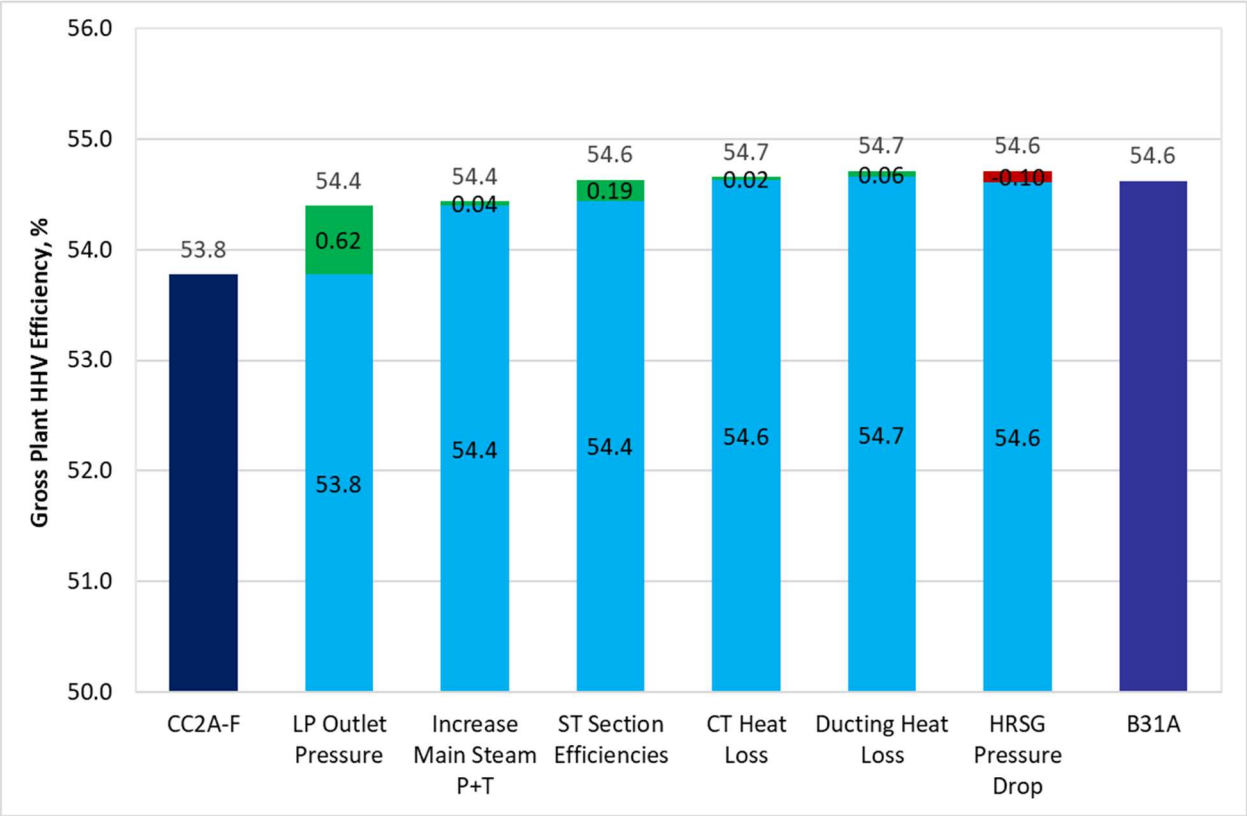

The air-cooled condenser used in Case CC2A-FC results in a higher LP turbine exhaust pressure, which negatively impacts the plant efficiency. Setting the LP turbine exhaust pressure equal to that of Case B31A results in a gross plant efficiency increase of 0.62 percentage points.

Additionally, the level of detail available when modeling Case CC2A-FC allowed for the inclusion of a stop valve upstream of the high-pressure steam turbines. While a stop valve is part of the design of Case B31A, the level of detail available at the time was not sufficient to model this aspect. Increasing the main steam pressure equal to that of Case B31A results in a gross plant efficiency increase of 0.04 percentage points.

The combination of a lower HP turbine inlet pressure and higher LP turbine exhaust pressure resulted in differences in steam turbine section efficiencies. Adjusting these efficiencies to match those of Case B31A results in a gross plant efficiency increase of 0.19 percentage points.

Accounting for differences in the assumed combustion turbine heat loss, ducting heat loss, and HRSG pressure drop results in a net reduction in gross plant efficiency of 0.02 percentage points.

After accounting for the differences noted above, the gross plant efficiency of Case CC2A-FC is 54.6 percent, identical to that of Case B31A.

3.6.4.1.1 Environmental Performance

The applicable environmental targets were presented in Section 2.3. A summary of the plant air emissions for Case CC2A-FC and Case B31A is presented in Exhibit 3-186.

Exhibit 3-186. Baseload plant air emissions summary comparison: Case B31A and Case CC2A-FC

Emissions Summary		
Case	B31A	CC2A-FC
SO_2, kg/MWh-gross (lb/MWh-gross)	0.003 (0.006)	0.003 (0.006)
NOx, kg/MWh-gross (lb/MWh-gross)	0.010 (0.022)	0.012 (0.027)
Particulate, kg/MWh-gross (lb/MWh-gross)	0.005 (0.012)	0.009 (0.019)
Hg, kg/MWh-gross (lb/MWh-gross)	0.000 (0.000)	0.000 (0.000)
VOC[A], kg/MWh-gross (lb/MWh-gross)	0.005 (0.011)	0.005 (0.011)
CO, kg/MWh-gross (lb/MWh-gross)	0.005 (0.012)	0.006 (0.014)
CO_2, kg/MWh-gross (lb/MWh-gross)	336 (741)	341 (753)
CO_2, kg/MWh-net (lb/MWh-net)	342 (755)	347 (765)

[A] As CH_4

The pipeline natural gas was assumed to contain no Hg or HCl, resulting in zero emissions.

The production of PM is a result of system inefficiencies and is not produced or emitted in any significant amount.

The natural gas was assumed to contain the domestic average value of total sulfur of 0.34 gr/100 scf (4.71×10^{-4} lb-S/MMBtu). [26] It was also assumed that the added CH_4S was the sole contributor of sulfur to the natural gas. No sulfur capture systems were required.

In Case B31A, the NOx is controlled to the lower detection limit, whereas in Case CC2A-FC, NOx is controlled to exactly meet the regulatory limit.

Case B31A, based on vendor input, assumed that the uncontrolled CO concentration was less than 1 ppmv, whereas the vendor input for Case CC2A-FC suggested an uncontrolled CO concentration of 6.6 ppmvd at 15 percent O_2. Consequently, a CO catalyst was included in Case CC2A-FC to control CO emissions to exactly meet the regulatory limit.

The VOC emissions target of 1.4 ppmvd at 15 percent O_2 does not require further reduction, though the CO catalyst will passively reduce VOC.

CO_2 emissions represent the uncontrolled discharge from the process.

3.6.4.2 Cost Results

The total plant costs of Case B31A is $567 million, 10 percent ($50 million) greater than that of Case CC2A-FC. While the air-cooled condenser used in Case CC2A-FC costs $22 million more than the water cooled condenser used in Case B31A, the dry cooling system reduces the total plant cost of Case CC2A-FC by $60 million (through lower costs for the water makeup and

pretreating systems, waste water treatment equipment and building, steam piping, and the elimination of the cooling water system [excluding the component cooling water system used for miscellaneous cooling loads]).

In addition, the total plant cost of Case CC2A-FC is reduced $17 million lower than B31A due to lower costs for the combustion turbine generator and stack. The lower cost of the combustion turbine generator is reflective of current commercial offerings, whereas the lower stack cost represents an adjustment in the estimation methodology from what was used for Case B31A. This adjustment was to align the stack costs with commercial estimates.

The balance of the difference ($4 million) is associated with larger equipment in Case CC2A-FC, due to higher feed rates, power output, and the inclusion of a CO reduction system.

While Case CC2A-FC includes a CO catalyst, which adds $360,000/year in operating costs, and the ammonia consumption of Case CC2A-FC is $650,000/year higher (due to higher uncontrolled NOx emissions from the combustion turbine, compared to Case B31A), the overall non-fuel variable O&M costs of Case CC2A-FC is 8 percent lower than that of Case B31A. The lower cost is primarily due to reduced water consumption and associated makeup and wastewater treatment chemicals ($2.7 million/year).

4 REFERENCES

[1] National Energy Technology Laboratory, "Quality Guidelines for Energy System Studies: Process Modeling Design Parameters," Department of Energy, Pittsburgh, 2019.

[2] National Energy Technology Laboratory, "Quality Guidelines for Energy System Studies: Fuel Prices for Selected Feedstocks in NETL Studies," Department of Energy, Pittsburgh, 2019.

[3] National Energy Technology Laboratory, "Quality Guidelines for Energy System Studies: Specification for Selected Feedstocks," Department of Energy, Pittsburgh, 2019.

[4] National Energy Technology Laboratory, "Quality Guidelines for Energy System Studies: Cost Estimation Methodology for NETL Assessments of Power Plant Performance," Department of Energy, Pittsburgh, 2019.

[5] Environmental Protection Agency, "40 CFR Part 60 - Carbon Pollution Emissions Guidelines for Existing Stationary Sources: Electric Utility Generating Units; Final Rule Vol. 80 No. 205," 23 October 2015. [Online]. Available: https://www.gpo.gov/fdsys/pkg/FR-2015-10-23/pdf/2015-22842.pdf. [Accessed 9 October 2018].

[6] Environmental Protection Agency, "40 CFR Part 60: Review of Standards of Performance for Greenhouse Gas Emissions from New, Modified, and Reconstructed Stationary Sources: Electric Utility Generating Units Vol. 83 No. 244," 20 December 2018. [Online].

[7] National Energy Technology Laboratory, "Quality Guidelines for Energy System Studies: Process Modeling Design Parameters," Department of Energy, Pittsburgh, 2019.

[8] National Energy Technology Laboratory, "Quality Guidelines for Energy System Studies: Specification for Selected Feedstocks," Department of Energy, Pittsburgh, 2019.

[9] Gas Research Institute, Variability of Natural Gas Composition in Select Major Metropolitan Areas of the United States, Springfield: Department of Commerce, 1992.

[10] Electronic Code of Federal Regulations, "Title 40, Chapter I, Subchapter C, Part 60," 20 April 2021. [Online]. Available: https://www.ecfr.gov/cgi-bin/text-idx?SID=957132b8f2cf1f2b83f4481e5b72ca4a&mc=true&node=pt40.8.60&rgn=div5#se40.8.60_14330. [Accessed 22 April 2021].

[11] Environmental Protection Agency, "Prevention of Significant Deterioration of Air Quality," 26 October 2016. [Online]. Available: https://www.ecfr.gov/current/title-40/chapter-I/subchapter-C/part-52/subpart-A/section-52.21. [Accessed 31 March 2023].

[12] Environmental Protection Agency, "Review of New Sources and Modifications," 7 November 1986. [Online]. Available: https://www.ecfr.gov/current/title-40/chapter-I/subchapter-C/part-51/subpart-I. [Accessed 31 March 2023].

[13] Environmental Protection Agency, "Map of Counties Designated "Nonattainment" for Clean Air Act's National Ambient Air Quality Standards (NAAQS)," 30 April 2018. [Online]. Available: https://www3.epa.gov/airquality/greenbook/map/mapnpoll.pdf. [Accessed 10 June 2019].

[14] Environmental Protection Agency, "40 CFR Part 423 Effluent Limitations Guidelines and Standards for the Steam Electric Power," 2019.

[15] Environmental Protection Agency, "National Pollutant Discharge Elimination System (NPDES)," [Online]. Available: https://www.epa.gov/npdes. [Accessed 13 July 2017].

[16] L. B. Davis and S. Black, "Dry Low NOx Combustions Systems for GE Heavy-Duty Gas Turbines," GE Power Systems, October 2000.

[17] GE Power, "7HA.01/.02 Gas Turbine," October 2015. [Online]. Available: https://www.ge.com/content/dam/gepower-pgdp/global/en_US/documents/product/gas%20turbines/Fact%20Sheet/7ha-fact-sheet-oct15.pdf. [Accessed 23 April 2021].

[18] Siemens Energy, "Gas turbines from 4 to 593 MW," 2019. [Online]. Available: https://assets.siemens-energy.com/siemens/assets/api/uuid:b86b3850-ef42-4c8d-a040-15866aa95f02/gas-turbines-siemens-int.pdf. [Accessed 23 April 2021].

[19] National Energy Technology Laboratory, "Quality Guidelines for Energy System Studies: Cost Estimation Methodology for NETL Assessments of Power Plant Performance," Department of Energy, Pittsburgh, 2019.

[20] Electric Power Research Institute, "Flexible Operation of Current and Next-Generation Fossil Plants With and Without Carbon Capture," EPRI, 2016.

[21] PJM, "Cost Development Subcommittee," 2 December 2021. [Online]. Available: https://www.pjm.com/-/media/committees-groups/subcommittees/cds/2021/20211202/20211202-item-06-start-cost-alternate-proposal.ashx. [Accessed 10 March 2023].

[22] ANSI/IEEE, "762-2006 - IEEE Standard Definitions for Use in Reporting Electric Generating Unit Reliability, Availability, and Productivity," ANSI/IEEE, 29 March 2012. [Online]. Available: https://ieeexplore.ieee.org/document/4135890. [Accessed January 2019].

[23] North American Electric Reliability Corporation, "Generating Availability Data System (GADS)," North American Electric Reliability Corporation, 2017. [Online]. Available: https://www.nerc.com/pa/RAPA/gads/Pages/GeneratingAvailabilityDataSystem-(GADS).aspx. [Accessed January 2019].

[24] GE Power, "LM6000 Power Plants," April 2021. [Online]. Available: https://www.ge.com/content/dam/gepower-new/global/en_US/downloads/gas-

new-site/products/gas-turbines/lm6000-fact-sheet-product-specifications.pdf. [Accessed 23 April 2021].

[25] National Energy Technology Laboratory, "Cost and Performance Baseline For Fossil Energy Plants Volume 1: Bituminous Coal and Natural Gas to Electricity," Department of Energy, Pittsburgh, 2019.

[26] Gas Research Institute, Variability of Natural Gas Composition in Select Major Metropolitan Areas of the United States, Springfield: U.S. Department of Commerce, 1992.

[27] National Energy Technology Laboratory, "Quality Guidelines for Energy System Studies: Fuel Prices for Selected Feedstocks in NETL Studies," Department of Energy, Pittsburgh, 2019.

[28] Energy Information Amdinstration, "Natural Gas Spot and Future Prices," [Online]. Available: https://www.eia.gov/dnav/ng/ng_pri_fut_s1_d.htm. [Accessed June 2022].

APPENDIX: STARTS-BASED O&M COSTS

Starts-based operation and maintenance (O&M) costs are provided for cases CC1A-F, CC1A-H, CC2A-F, CC2A-FC, and CC2A-H in Exhibit A-1 through Exhibit A-5.

Exhibit A-1. Case CC1A-F initial and annual O&M costs (starts-based)

Case:	CC1A-F	– NGCC F-Class (1x1)			Cost Base:	Dec 2018
Plant Size (MW, gross):	369	Heat Rate-net (Btu/kWh):	6,461		Capacity Factor (%):	25
Operating & Maintenance Labor						
Operating Labor				**Operating Labor Requirements per Shift**		
Operating Labor Rate (base):	38.50	**$/hour**		Skilled Operator:		1.0
Operating Labor Burden:	30.00	**% of base**		Operator:		1.0
Labor O-H Charge Rate:	25.00	**% of labor**		Foreman:		1.0
Starts Per Year:	365	**#/year**		Lab Techs, etc.:		1.0
Cost Per Start:	14,000	**$/start**		**Total:**		**4.0**
Fixed Operating Costs						
						Annual Cost ($)
				Annual Operating Labor:		$1,753,752
				Maintenance Labor:		$2,044,000
				Administrative & Support Labor:		$949,438
				Property Taxes and Insurance:		$6,337,140
				Total:		**$11,084,337**
Variable Operating Costs						
						Annual Cost ($)
				Maintenance Material:		$3,066,000
Consumables						
	Initial Fill	**Per Day**	**Per Unit**	**Initial Fill**		**Annual Cost ($)**
Water (gal/1000):	0	4	$1.90	$0		$718
Makeup and Waste Water Treatment Chemicals (ton):	0	0.012	$550.00	$0		$619
Ammonia (19 wt%, ton):	0	4.7	$300.00	$0		$128,006
SCR Catalyst (ft^3):	2,807	1.54	$150.00	$421,095		$21,055
CO Catalyst (ft^3):	223	0.12	$4,000.00	$891,044		$44,552
Subtotal:				**$1,312,139**		**$194,950**
Waste Disposal						
SCR Catalyst (ft^3):	0	1.54	$2.50	$0		$351
CO Catalyst (ft^3):	0	0.12	$2.50	$0		$28
Subtotal:				**$0**		**$379**
			Variable Operating Costs Total:	**$1,312,139**		**$3,261,328**
Fuel Cost						
Natural Gas (MMBtu):	0	57,162	$4.42	$0		$23,054,689
			Fuel Costs Total:	**$0**		**$23,054,689**

Exhibit A-2. Case CC1A-H initial and annual O&M costs (starts-based)

Case:	CC1A-H	– NGCC H-Class (1x1)			Cost Base:	Dec 2018
Plant Size (MW, gross):	552	Heat Rate-net (Btu/kWh):	6,225		Capacity Factor (%):	25
Operating & Maintenance Labor						
Operating Labor				**Operating Labor Requirements per Shift**		
Operating Labor Rate (base):	38.50	**$/hour**		Skilled Operator:		1.0
Operating Labor Burden:	30.00	**% of base**		Operator:		1.0
Labor O-H Charge Rate:	25.00	**% of labor**		Foreman:		1.0
Starts Per Year:	365	**#/year**		Lab Techs, etc.:		1.0
Cost Per Start:	27,000	**$/start**		**Total:**		**4.0**
Fixed Operating Costs						
						Annual Cost ($)
				Annual Operating Labor:		$1,753,752
				Maintenance Labor:		$3,942,000
				Administrative & Support Labor:		$1,423,938
				Property Taxes and Insurance:		$8,296,631
				Total:		**$15,416,321**
Variable Operating Costs						
						Annual Cost ($)
				Maintenance Material:		$5,913,000
Consumables						
	Initial Fill	**Per Day**	**Per Unit**	**Initial Fill**		**Annual Cost ($)**
Water (gal/1000):	0	5	$1.90	$0		$845
Makeup and Waste Water Treatment Chemicals (ton):	0	0.015	$550.00	$0		$729
Ammonia (19 wt%, ton):	0	6.7	$300.00	$0		$184,612
SCR Catalyst (ft^3):	3,816	2.09	$150.00	$572,466		$28,623
CO Catalyst (ft^3):	306	0.17	$4,000.00	$1,224,596		$61,230
Subtotal:				**$1,797,062**		**$276,039**
Waste Disposal						
SCR Catalyst (ft^3):	0	2.09	$2.50	$0		$477
CO Catalyst (ft^3):	0	0.17	$2.50	$0		$38
Subtotal:				**$0**		**$515**
				Variable Operating Costs Total:		**$1,797,062**	**$6,189,554**
Fuel Cost						
Natural Gas (MMBtu):	0	82,472	$4.42	$0		$33,263,196
				Fuel Costs Total:		**$0**	**$33,263,196**

Exhibit A-3. Case CC2A-F initial and annual O&M costs (starts-based)

Case:	CC2A-F	– NGCC F-Class (2x1)			Cost Base:	Dec 2018
Plant Size (MW, gross):	738	Heat Rate-net (Btu/kWh):	6,452		Capacity Factor (%):	25
Operating & Maintenance Labor						
Operating Labor				**Operating Labor Requirements per Shift**		
Operating Labor Rate (base):	38.50	**$/hour**		Skilled Operator:		1.0
Operating Labor Burden:	30.00	**% of base**		Operator:		2.0
Labor O-H Charge Rate:	25.00	**% of labor**		Foreman:		1.0
Starts Per Year:	365	**#/year**		Lab Techs, etc.:		1.0
Cost Per Start:	26,000	**$/start**		**Total:**		**5.0**
Fixed Operating Costs						
						Annual Cost ($)
				Annual Operating Labor:		$2,192,190
				Maintenance Labor:		$3,796,000
				Administrative & Support Labor:		$1,497,048
				Property Taxes and Insurance:		$10,504,760
				Total:		**$17,989,997**
Variable Operating Costs						
						Annual Cost ($)
				Maintenance Material:		$5,694,000
Consumables						
	Initial Fill	**Per Day**	**Per Unit**	**Initial Fill**		**Annual Cost ($)**
Water (gal/1000):	0	6	$1.90	$0		$1,084
Makeup and Waste Water Treatment Chemicals (ton):	0	0.019	$550.00	$0		$935
Ammonia (19 wt%, ton):	0	9.4	$300.00	$0		$256,013
SCR Catalyst (ft^3):	5,615	3.08	$150.00	$842,189		$42,109
CO Catalyst (ft^3):	446	0.24	$4,000.00	$1,783,114		$89,156
Subtotal:				**$2,625,303**		**$389,297**
Waste Disposal						
SCR Catalyst (ft^3):	0	3.08	$2.50	$0		$702
CO Catalyst (ft^3):	0	0.24	$2.50	$0		$56
Subtotal:				**$0**		**$758**
				Variable Operating Costs Total:		**$2,625,303**	**$6,084,055**
Fuel Cost						
Natural Gas (MMBtu):	0	114,323	$4.42	$0		$46,109,378
				Fuel Costs Total:		**$0**	**$46,109,378**

Exhibit A-4. Case CC2A-FC initial and annual O&M costs (starts-based)

Case:	CC2A-FC	– NGCC F-Class (2x1) Conventional Start		Cost Base:	Dec 2018
Plant Size (MW, gross):	738	Heat Rate-net (Btu/kWh):	6,452	Capacity Factor (%):	25

Operating & Maintenance Labor					
Operating Labor				**Operating Labor Requirements per Shift**	
Operating Labor Rate (base):	38.50	**$/hour**		Skilled Operator:	1.0
Operating Labor Burden:	30.00	**% of base**		Operator:	2.0
Labor O-H Charge Rate:	25.00	**% of labor**		Foreman:	1.0
Starts Per Year:	365	**#/year**		Lab Techs, etc.:	1.0
Cost Per Start:	26,000	**$/start**		**Total:**	**5.0**

Fixed Operating Costs	
	Annual Cost ($)
Annual Operating Labor:	$2,192,190
Maintenance Labor:	$3,796,000
Administrative & Support Labor:	$1,497,048
Property Taxes and Insurance:	$10,339,735
Total:	**$17,824,973**

Variable Operating Costs					
					Annual Cost ($)
Maintenance Material:					$5,694,000
Consumables					
	Initial Fill	**Per Day**	**Per Unit**	**Initial Fill**	**Annual Cost ($)**
Water (gal/1000):	0	6	$1.90	$0	$1,084
Makeup and Waste Water Treatment Chemicals (ton):	0	0.019	$550.00	$0	$935
Ammonia (19 wt%, ton):	0	9.4	$300.00	$0	$256,013
SCR Catalyst (ft^3):	5,615	3.08	$150.00	$842,189	$42,109
CO Catalyst (ft^3):	446	0.24	$4,000.00	$1,783,114	$89,156
Subtotal:				**$2,625,303**	**$389,297**
Waste Disposal					
SCR Catalyst (ft^3):	0	3.08	$2.50	$0	$702
CO Catalyst (ft^3):	0	0.24	$2.50	$0	$56
Subtotal:				**$0**	**$758**
Variable Operating Costs Total:				**$2,625,303**	**$6,084,055**

Fuel Cost					
Natural Gas (MMBtu):	0	114,323	$4.42	$0	$46,109,378
Fuel Costs Total:				**$0**	**$46,109,378**

Exhibit A-5. Case CC2A-H initial and annual O&M costs (starts-based)

Case:	CC2A-H	– NGCC H-Class (2x1)		Cost Base:	Dec 2018
Plant Size (MW, gross):	1107	Heat Rate-net (Btu/kWh):	6,207	Capacity Factor (%):	25
Operating & Maintenance Labor					
Operating Labor			**Operating Labor Requirements per Shift**		
Operating Labor Rate (base):	38.50	**$/hour**	Skilled Operator:	1.0	
Operating Labor Burden:	30.00	**% of base**	Operator:	2.0	
Labor O-H Charge Rate:	25.00	**% of labor**	Foreman:	1.0	
Starts Per Year:	365	**#/year**	Lab Techs, etc.:	1.0	
Cost Per Start:	51,500	**$/start**	**Total:**	**5.0**	

Fixed Operating Costs	
	Annual Cost ($)
Annual Operating Labor:	$2,192,190
Maintenance Labor:	$7,519,000
Administrative & Support Labor:	$2,427,798
Property Taxes and Insurance:	$13,948,661
Total:	**$26,087,648**

Variable Operating Costs					
					Annual Cost ($)
Maintenance Material:					$11,278,500
Consumables					
	Initial Fill	**Per Day**	**Per Unit**	**Initial Fill**	**Annual Cost ($)**
Water (gal/1000):	0	8	$1.90	$0	$1,341
Makeup and Waste Water Treatment Chemicals (ton):	0	0.023	$550.00	$0	$1,156
Ammonia (19 wt%, ton):	0	13.5	$300.00	$0	$369,223
SCR Catalyst (ft^3):	7,633	4.18	$150.00	$1,144,932	$57,247
CO Catalyst (ft^3):	611	0.33	$4,000.00	$2,444,382	$122,219
Subtotal:				**$3,589,314**	**$551,186**
Waste Disposal					
SCR Catalyst (ft^3):	0	4.18	$2.50	$0	$954
CO Catalyst (ft^3):	0	0.33	$2.50	$0	$76
Subtotal:				**$0**	**$1,030**
Variable Operating Costs Total:				**$3,589,314**	**$11,830,717**

Fuel Cost					
Natural Gas (MMBtu):	0	164,945	$4.42	$0	$66,526,391
Fuel Costs Total:				**$0**	**$66,526,391**

www.netl.doe.gov

Albany, OR • Anchorage, AK • Morgantown, WV • Pittsburgh, PA • Sugar Land, TX

(800) 553-7681

