U.S. DEPARTMENT OF ENERGY | National Energy Technology Laboratory

OFFICE OF FOSSIL ENERGY

Performance and Cost of a Natural Gas Fuel Cell Plant with Complete Internal Reformation

November 27, 2013

DOE/NETL-2014/1635

Disclaimer

This report was prepared as an account of work sponsored by an agency of the United States Government. Neither the United States Government nor any agency thereof, nor any of their employees, makes any warranty, express or implied, or assumes any legal liability or responsibility for the accuracy, completeness, or usefulness of any information, apparatus, product, or process disclosed, or represents that its use would not infringe privately owned rights. Reference therein to any specific commercial product, process, or service by trade name, trademark, manufacturer, or otherwise does not necessarily constitute or imply its endorsement, recommendation, or favoring by the United States Government or any agency thereof. The views and opinions of authors expressed therein do not necessarily state or reflect those of the United States Government or any agency thereof.

Author List:

Energy Sector Planning and Analysis (ESPA)

Arun K.S. Iyengar, Richard Newby, Mark Woods, and Dale Keairns
Booz Allen Hamilton, Inc.

This report was prepared by Energy Sector Planning and Analysis (ESPA) for the United States Department of Energy (DOE), National Energy Technology Laboratory (NETL). This work was completed under DOE NETL Contract Number DE-FE0004001. This work was performed under ESPA Task 341.02.05 and 341.03.05.

The authors wish to acknowledge the excellent guidance, contributions, and cooperation of the NETL staff, particularly:

Walter Shelton, NETL Technical Project Monitor

Gregory A. Hackett, NETL Technical Project Monitor

Kristin Gerdes, Shailesh Vora, and Travis Shultz

DOE Contract Number DE-FE0004001

This page intentionally left blank.

Table of Contents

Executive Summary 1
1 Introduction 9
2 NGFC Process 9
2.1 CO_2 Purification Unit 10
3 Stack Degradation and Production Costs 11
3.1 Stack Degradation 11
3.2 Degradation and Operation 12
4 Cost Estimation 25
5 Performance 27
6 System Costs 33
7 Sensitivity of COE to Stack Cost, Extra Area, and Degradation 39
8 Conclusion 43
9 References 44
Appendix A Updated IR-NGFC System without CPU 45

Exhibits

Exhibit ES-1 IR-NGFC process diagram 2
Exhibit ES-2 Performance and COE for the IR-NGFC system with and without the CPU 3
Exhibit ES-3 Comparison of the IR-NGFC system with CPU costs with NETL metrics 3
Exhibit ES-4 IR-NGFC system with CPU - COE variation with extra area and stack degradation rate 5
Exhibit ES-5 IR-NGFC system with CPU - COE variation with stack cost and degradation rate. 6
Exhibit ES-6 IR-NGFC system with CPU - cost of captured CO_2 variation with stack cost and degradation rate 7
Exhibit ES-7 Comparison of IR-NGFC COE with IGCC and NGCC systems 8
Exhibit 2-1 IR-NGFC process diagram 10
Exhibit 2-2 CO_2 purification process 11
Exhibit 3-1 Cell degradation data and model fits (7) 12
Exhibit 3-2 Cell voltage and ASR variations for the degradation models 14
Exhibit 3-3 Power variation with time for the two degradation models 15
Exhibit 3-4 Constant power operation scenario at 1.5% per 1000 hrs linear degradation rate with 50% extra installed area 17
Exhibit 3-5 Constant power operation scenario with first order degradation for an initial rate of 1.5% per 1000 hrs with 50% extra installed area 18
Exhibit 3-6 Constant power operation scenario with first order degradation for an initial rate of 1.5% per 1000 hrs with 100% extra installed area 19
Exhibit 3-7 Constant power operation scenario with first order degradation for an initial rate of 0.2% per 1000 hrs with 100% extra installed area 20
Exhibit 3-8 Variation of stack replacement period with degradation rate and extra installed area assuming linear degradation 21
Exhibit 3-9 Variation of stack replacement period with degradation rate and extra installed area assuming first order degradation 22
Exhibit 3-10 Variation of the average stack replacement period with degradation rate and extra installed area – average of the values form the two models 23
Exhibit 3-11 Average yearly cost of stack and the number of stack replacements per year for a 0.2% per 1000 hrs degradation rate for the two models 24
Exhibit 4-1 NGFC power island configurations 25
Exhibit 4-2 SOFC module costs in 2011$ 26
Exhibit 4-3 SOFC BOP costs in 2011$ 26
Exhibit 4-4 O&M costs in 2011$ 26
Exhibit 5-1 Block flow diagram of the IR-NGFC system with CPU 27
Exhibit 5-2 Performance of the IR-NGFC system with and without the CPU 28
Exhibit 5-3 Stream table for the IR-NGFC system with CPU 29
Exhibit 5-4 Process flow diagram of the IR-NGFC power island 30
Exhibit 5-5 Process flow diagram of the IR-NGFC CO_2 purification unit 31
Exhibit 5-6 IR-NGFC material and energy balance tables 32
Exhibit 6-1 SOFC power island capital costs 34
Exhibit 6-2 IR-NGFC with CPU - capital costs of system components, TPC, TOC, and TASC 35
Exhibit 6-3 Distribution of the IR-NGFC with CPU capital costs 36
Exhibit 6-4 IR-NGFC with CPU - fixed operating costs 36
Exhibit 6-5 IR-NGFC with CPU - variable operating costs 37

Exhibit 6-6 Cost of electricity for the IR-NGFC system with and without the CPU 37
Exhibit 6-7 Comparison of present COE results with previous NGFC study (1)..... 38
Exhibit 6-8 Comparison of the IR-NGFC system with CPU with NETL metrics..... 38
Exhibit 6-9 Sensitivity of IR-NGFC with CPU COE to capital charge factor 38
Exhibit 7-1 Sensitivity of IR-NGFC system COE with CPU to extra area and stack degradation rate..... 40
Exhibit 7-2 Sensitivity of IR-NGFC system COE with CPU to stack cost and stack degradation rate..... 41
Exhibit 7-3 IR-NGFC system with CPU - cost of captured CO_2 variation with stack cost and degradation rate..... 42
Exhibit A-1 IR-NGFC system without CPU - block flow diagram..... 45
Exhibit A-2 IR-NGFC system without CPU - stream table..... 46
Exhibit A-3 IR-NGFC system without CPU - process flow diagram..... 47
Exhibit A-4 IR-NGFC system without CPU - mass and energy balances..... 48
Exhibit A-5 IR-NGFC system without CPU - SOFC power island capital costs..... 49
Exhibit A-6 IR-NGFC system without CPU - capital costs, TPC, TOC, and TASC 50
Exhibit A-7 IR-NGFC system without CPU - fixed and variable O&M costs..... 51

Acronyms and Abbreviations

AC	Alternating current
Aspen	Aspen Plus®
ASR	Area specific resistance
ASU	Air separation unit
Atm	Atmospheres
ATR	Auto thermal reformer
AUSC	Advanced ultra supercritical
BB	Bituminous Baseline
BOP	Balance of plant
Btu	British thermal unit
Btu/h	British thermal unit per hour
Btu/kWh	British thermal unit per kilowatt hour
Btu/lb	British thermal unit per pound
CCS	Carbon capture and sequestration
CF	Capacity factor
cm	Centimeter
CO_2	Carbon dioxide
COE	Cost of electricity
CPU	CO_2 purification unit
DC	Direct current
DOE	Department of Energy
E	Stack inlet gas Nernst potential
EOR	Enhanced oil recovery
ESPA	Energy Sector Planning and Analysis
ft	Foot, Feet
FY-COE	First year cost of electricity
gpm	Gallons per minute
h	Hour
H_2	Hydrogen
HHV	Higher heating value
HP	High pressure
HRSG	Heat recovery steam generator
HTX	Heat exchanger
IGCC	Integrated gasification combined cycle
IGFC	Integrated gasification fuel cell
IP	Intermediate pressure
IR	Internal reformation
ISO	International Standards Organization
kg/GJ	Kilogram per gigajoule
kg/h, kg/hr	Kilogram per hour
kJ	Kilojoules
kJ/h	Kilojoules per hour
kJ/kg	Kilojoules per kilogram
kV	Kilovolt
kW	Kilowatt
kWe	Kilowatts electric
kWh	Kilowatt-hour
lb	Pound
lb/h, lb/hr	Pounds per hour
LHV	Lower heating value
LP	Low pressure
m	Meters
m^3/min	Cubic meter per minute
MMBtu	Million British thermal units (also shown as 106 Btu)
MMBtu/h	Million British thermal units (also shown as 106 Btu) per hour
MMkJ	Million kilojoules (10^6 kJ)
MMkJ/h	Million kilojoules (10^6 kJ) per hour
mol%	Composition bases on molar percentage of constituents
MPa	Megapascals
MWh	Megawatt-hour
N/A	Not applicable
NETL	National Energy Technology Laboratory
NG	Natural gas
NGCC	Natural gas combined cycle
NGFC	Natural gas fuel cell
O&M	Operation and maintenance
O_2	Oxygen
OP	Overpotential of cell
PC	Pulverized coal
ppmv	Parts per million volume
psia	Pounds per square inch absolute
psig	Pounds per square inch gage
QGESS	Quality Guidelines for Energy System Studies
SOFC	Solid oxide fuel cell
T	Temperature
TOC	Total overnight cost
TPC	Total plant cost
Tonne	Metric ton (1000 kg)
T&S	Transport and storage
V	Voltage of cell
vol%	Volume percent
$/MMBtu	Dollars per million British thermal units
$/MWh	Dollars per megawatt hour

Executive Summary

Natural Gas Fuel Cell (NGFC) systems that feature complete internal reformation (IR) of the natural gas (NG) within the Solid Oxide Fuel Cell (SOFC) stack are particularly attractive due to their higher electric efficiency coupled with lower costs relative to their counterparts that rely, either partly or fully, on external reformation of NG to produce syngas. Internal reformation, while eliminating the need for specialized process equipment, utilizes heat generated in the SOFC stack directly for the endothermic reformation reaction, and reduces the air flow rate needed to maintain a desired stack temperature gradient, resulting in higher process efficiency. Accordingly, NGFC systems with complete IR form the ultimate embodiment of the current SOFC technology development program at the National Energy Technology Laboratory (NETL), which is consistent with the commercialization strategies being pursued by SOFC industrial teams in the stationary power generator sector. The performance and cost of a NGFC system with IR with carbon capture and sequestration (CCS) is presented in this report. The system also includes a carbon dioxide (CO_2) purification unit (CPU) to meet enhanced oil recovery (EOR) requirements. Stack degradation limits the operating lifetime of the capital intensive SOFC stack and forms a significant component of the production costs. Modified stack operational procedure in addition to installation of extra area, common practical solutions generally used to mitigate adverse effects of stack degradation, were also modeled.

The IR-NGFC process, shown in Exhibit ES-1, was simulated using the Aspen Plus® (Aspen Technology Inc.) platform. Desulfurized NG is fed directly to the SOFC module and mixes with the recirculated anode off-gas, which supplies the steam required for reformation of inlet NG to syngas. To prevent cracking and deleterious carbon formation, a pre-reformer, which converts the higher hydrocarbons into methane, is generally included before completing the reformation internal to the stack. The anode off-gas recirculation rate is also maintained at an oxygen-to-carbon ratio of 2.1 to avoid carbon formation anywhere in the fuel path. The oxidant is supplied to the cathode by an air blower, and heat exchangers on both the anode and cathode side are appropriately designed to keep the desired temperature gradient across the stack. A cathode-gas recirculator is also included to modulate the air-side heat exchanger size. The heat from burning the electrochemically unutilized fuel to completion in an oxygen (O_2) driven (oxy-) combustor is transferred to a steam bottoming cycle. Waste heat from the cathode exhaust is also transferred to the steam cycle after satisfying the steam requirements of the cryogenic air separation unit (ASU), which is used to supply the O_2 to the combustor.

The SOFC power island costs were estimated based on the NETL SOFC stack goal of $225/kWe, in 2011 dollars. The SOFC module and balance of plant (BOP) costs, and costs of the other major components of the system including the air separation unit (ASU), the CPU, and the steam cycle were estimated in 2011 dollars based on the earlier NGFC system study (1) and the Bituminous Baseline (BB) update (2).

Exhibit ES-1 IR-NGFC process diagram

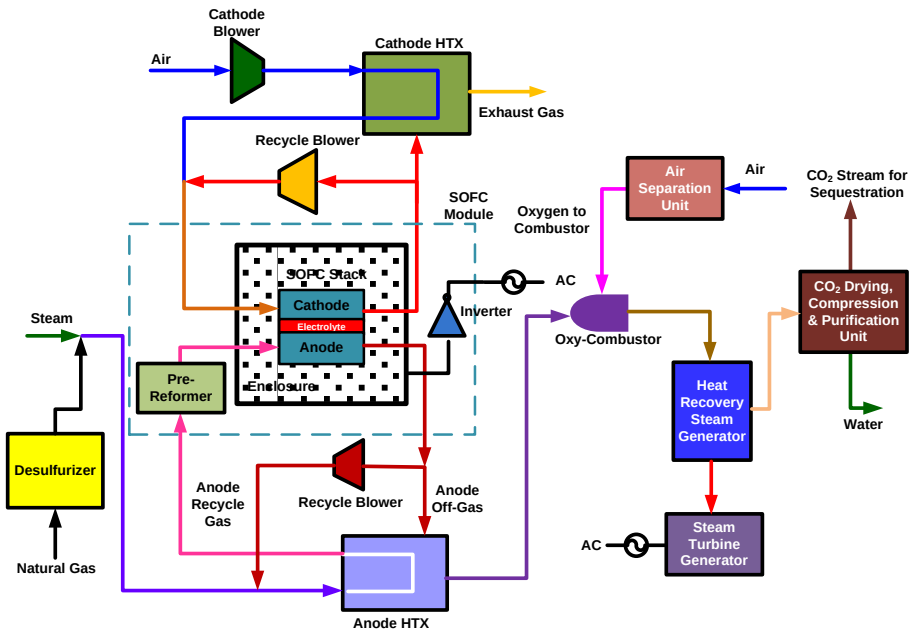

Source: NETL

In practice, degradation of stack performance is mitigated by providing additional capacity in the form of extra stack active surface, and a constant power output is maintained by operating the stack at a voltage above the design voltage (and the current below the design value) initially, and increasing the current subsequently as the stack voltage declines; the system efficiency, however, varies from a value that is higher than the nominal value to a value below it over the stack lifetime. The corresponding stack operational scenarios, which effectively compensates for stack degradation, were modeled to optimize the extra area installed and evaluate the corresponding stack replacement period. Both linear and first-order stack degradation models at various degradation rates were investigated in the present study. It was found that the first order degradation assumption results in stack life values that are generally 25 percent higher than the values computed assuming a linear degradation. For the projected SOFC stack degradation rate of 0.2 percent per 1000 h, installation of 10 percent extra area was found to be an optimum. The corresponding stack life was predicted to be about 6.4 years and 8.1 years for the linear and the first order models respectively. Accordingly, a stack with additional 10 percent area with an average stack replacement period of 7.3 years was assumed for the Nth of a kind NGFC unit in the cost of electricity (COE) calculations.

The analyzed IR-NGFC process with the CPU resulted in net plant efficiency of ~64.7 percent (HHV). This is ~1 percentage point lower than the performance predicted for the same NGFC process without the CPU as shown in Exhibit ES-2, which summarizes the performance and cost results for the present study. The total plant cost (TPC) was calculated to be $1129/kWe in 2011 dollars. The first year COE in 2011 dollars, excluding the CO_2 Transport and Storage (T&S) costs for the IR-NGFC process with the CPU is calculated to be $68.8/MWh based on a 85 percent capacity factor at a capital charge factor of 12.4 percent (5-year high-risk financial assumption) and with a natural gas price of $6.13/MMBtu. The COE with T&S charges is higher by ~$3.0/MWh as shown in Exhibit ES-2.

Unless explicitly stated the term COE refers to the COE value without T&S in the ensuing discussion. Elimination of the CPU was seen to result in a ~2 percent decrease in the COE value (Exhibit ES-2) while low-risk financial assumptions decrease the COE by 5 percent.

Exhibit ES-2 Performance and COE for the IR-NGFC system with and without the CPU

Parameter	Unit	With CPU	Without CPU
Net Plant Efficiency	%	64.7	65.6
Variable COE	$/MWh	40.5	39.8
Fuel		32.3	31.9
Variable O&M		8.1	7.9
Fixed O&M		5.4	5.3
Capital Charges		22.9	21.9
Total First Year COE (excl. T&S)		68.8	67.0
CO_2 T&S		3.0	3.1
Total First Year COE (with T&S)		71.8	70.1

The COE of the IR-NGFC system with the CPU is ~19 percent lower than the COE of the reference F-Frame natural gas combined cycle (NGCC) system with carbon capture ($85/MWh excluding T&S) (3) as shown in Exhibit ES-3; it is also ~48 percent lower than the COE of the baseline integrated gasification combined cycle (IGCC) system with carbon capture ($133/MWh excluding T&S). The cost of captured CO_2 calculated using the COE of the reference NGCC system without capture ($57.2/MWh) (3) is also presented in Exhibit ES-3.

Exhibit ES-3 Comparison of the IR-NGFC system with CPU costs with NETL metrics

Metric		Reference		Calculation	Present NGFC system
		System	COE ($/MWh)		
Reduction in COE	%	NGCC with CCS	85	$\frac{COE_{NGFC} - COE_{NGCC\ with\ CCS}}{COE_{NGCC\ with\ CCS}}$	***19.0***
		IGCC with CCS	133	$\frac{COE_{NGFC} - COE_{IGCC\ with\ CCS}}{COE_{IGCC\ with\ CCS}}$	***48.3***
Cost of CO_2 Captured	$/tonne CO_2	NGCC without Capture	57.2	$\frac{COE_{NGFC} - COE_{NGCC\ without\ CCS}}{CO_2\ captured\ (tonne/MWh)}$	***42.1***

At the stack cost of $225/kWe, a stack degradation rate of 0.5 percent per 1000 hours or lower was required to be cost competitive with the reference NGCC system (3) as depicted in Exhibit ES-4, which shows the sensitivity of the COE to the degradation rate and the extra installed area; the requirement on the stack degradation rate is less stringent, 1.0 percent per 1000 hours or lower, in order to achieve at least 20 percent reduction in COE over the IGCC system with capture. As mentioned earlier, there appears to be no significant advantage in installing more than 10 percent additional area at any degradation rate. The cost-competitiveness with the NGCC system can be met at higher degradation rates if the stack cost is reduced from the $225/kWe value used in present calculations, as illustrated in Exhibit ES-5. At a degradation rate of 0.2 percent per 1000 h, the IR-NGFC system remains attractive relative to the NGCC and IGCC systems (both with CCS) even for stack costs higher than $225/kWe. A stack degradation rate of 0.5 percent per 1000 h represents an upper limit beyond which the IR-NGFC system becomes less attractive relative to an NGCC system with CCS for the cost of CO_2 captured metric, as shown in Exhibit ES-6. These results underline the importance of reducing the stack degradation rates as part of the SOFC technology development roadmap set by NETL.

The IR-NGFC system costs are compared to IGCC and NGCC systems (without T&S costs) in Exhibit ES-7 with and without the CCS constraint. As discussed earlier, the IR-NGFC system is clearly superior to both the NGCC and the IGCC systems when carbon capture is desired. However, for cases without the CCS constraint, the IR-NGFC system cost, while still being attractive when compared to an IGCC system, is slightly higher than the NGCC system cost. A decrease in stack cost is required to be cost-competitive with the NGCC system in this case. The SOFC is essentially an oxy-fuel reactor, and along with the sealed design generally used to separate the air and fuel, it forms a highly effective inherent carbon separator (that produces power); it produces a concentrated CO_2 effluent that is ready for CCS with minimal incremental costs. This underscores the leading role played by SOFC-based systems in meeting NETL's environmental vision.

Exhibit ES-4 IR-NGFC system with CPU - COE variation with extra area and stack degradation rate[1]

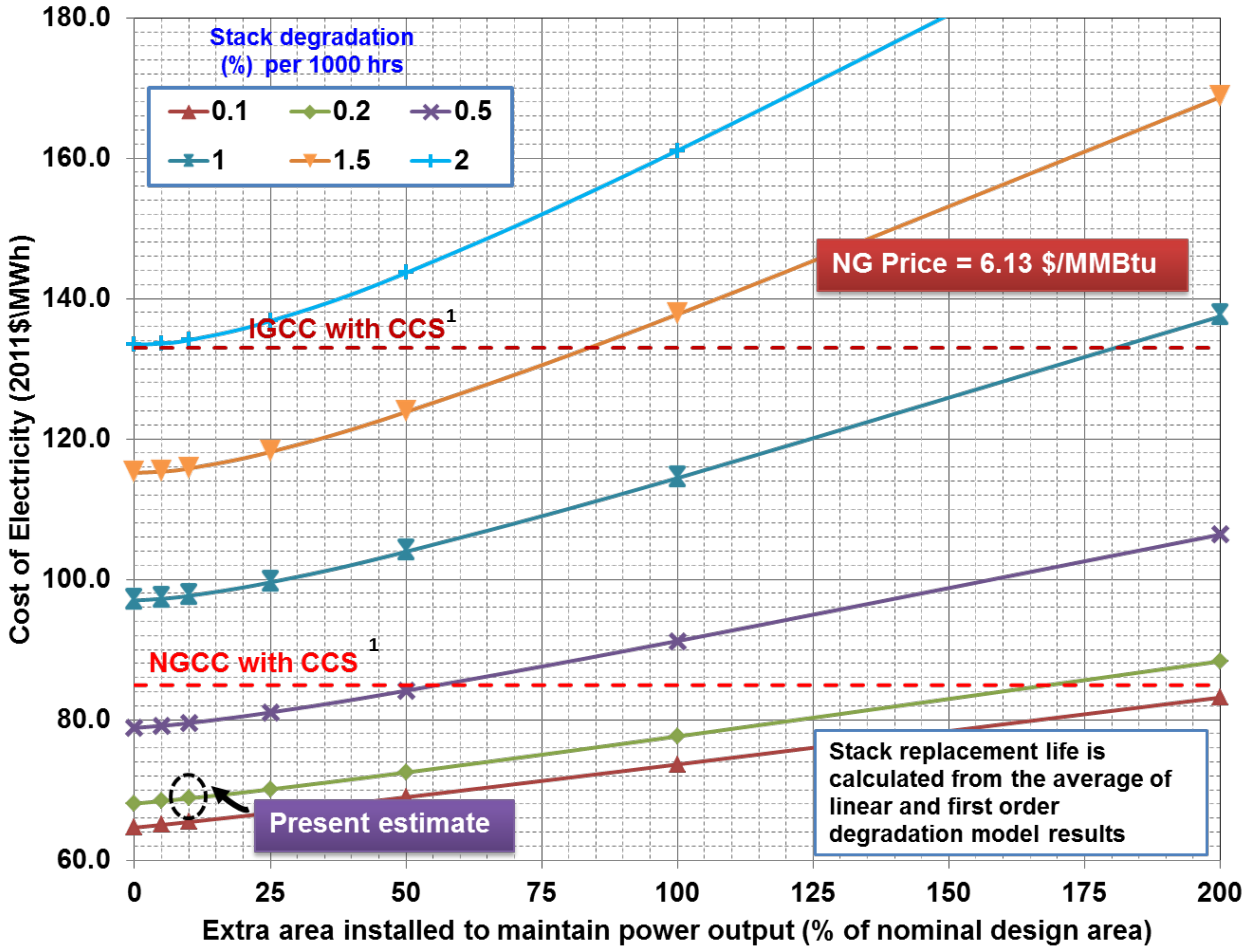

Source: NETL

[1] Costs of electricity (without T&S) for the reference IGCC and the reference NGCC systems with CCS are also shown (2), (3).

Exhibit ES-5 IR-NGFC system with CPU - COE variation with stack cost and degradation rate[1]

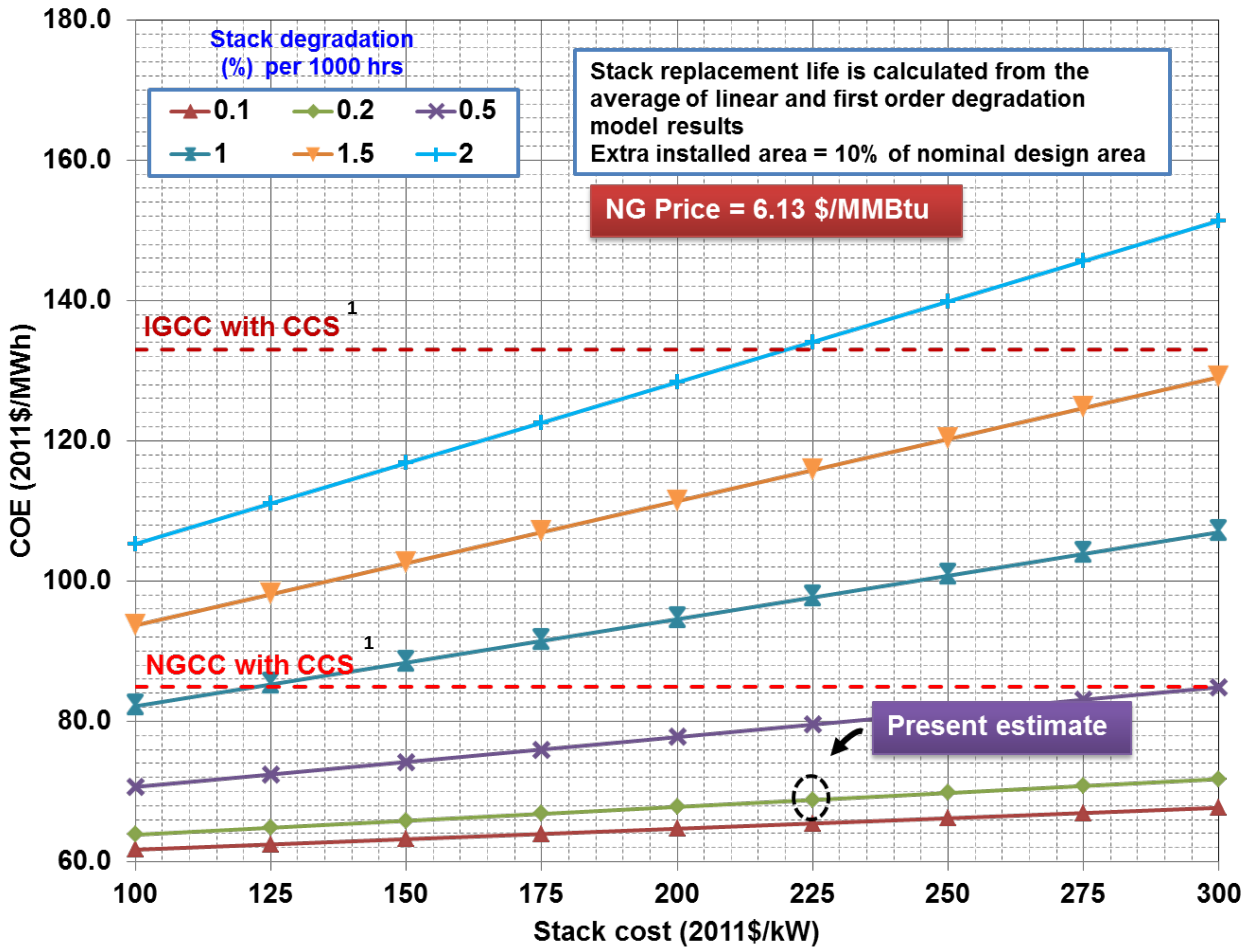

Source: NETL

[1] Costs of electricity (without T&S) for the reference IGCC and the reference NGCC systems with CCS are also shown (2), (3).

Exhibit ES-6 IR-NGFC system with CPU - cost of captured CO_2 variation with stack cost and degradation rate[1]

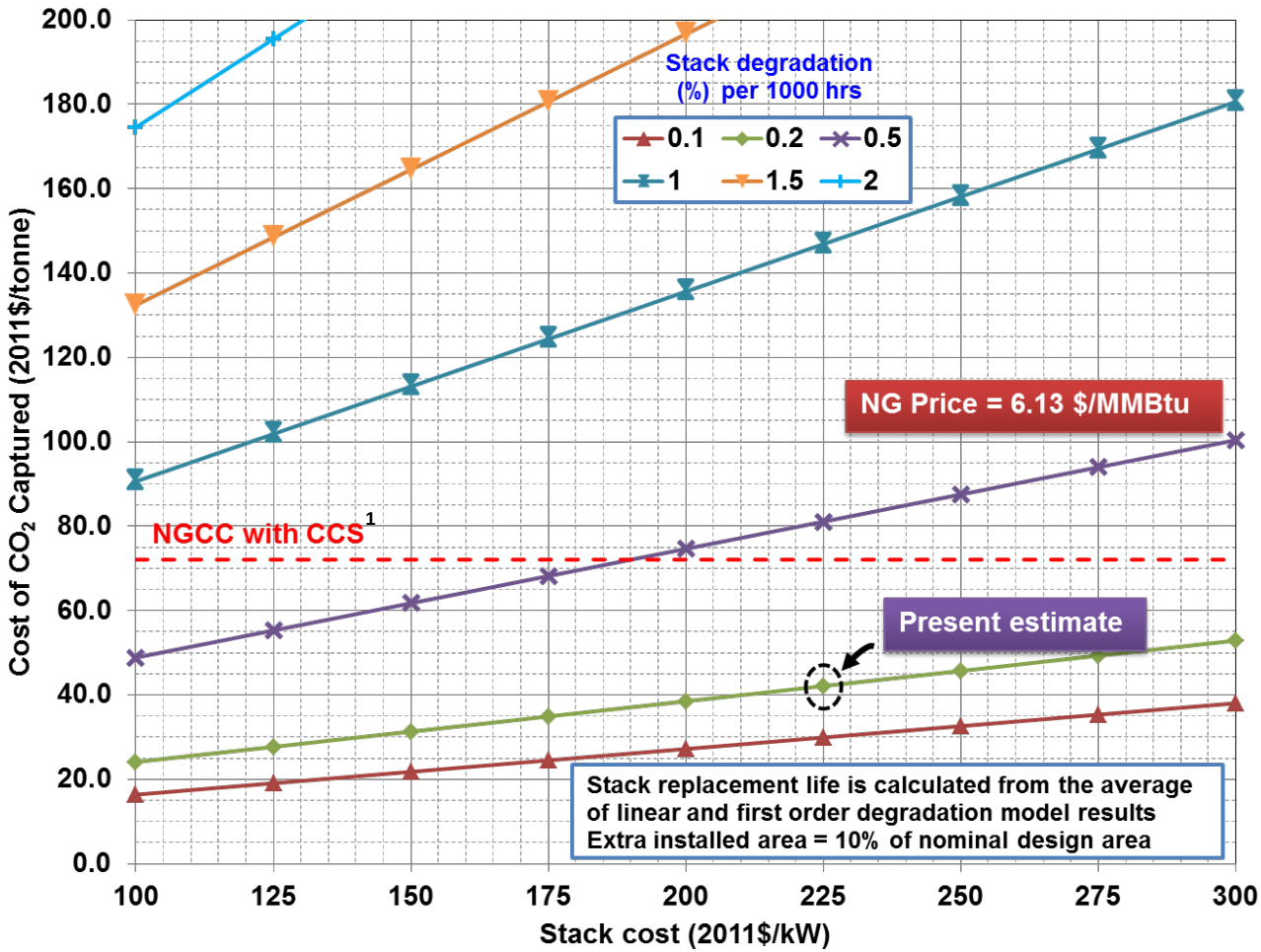

Source: NETL

[1] Cost of CO_2 captured for the reference NGCC system is also shown (3).

Exhibit ES-7 Comparison of IR-NGFC COE with IGCC and NGCC[1] systems

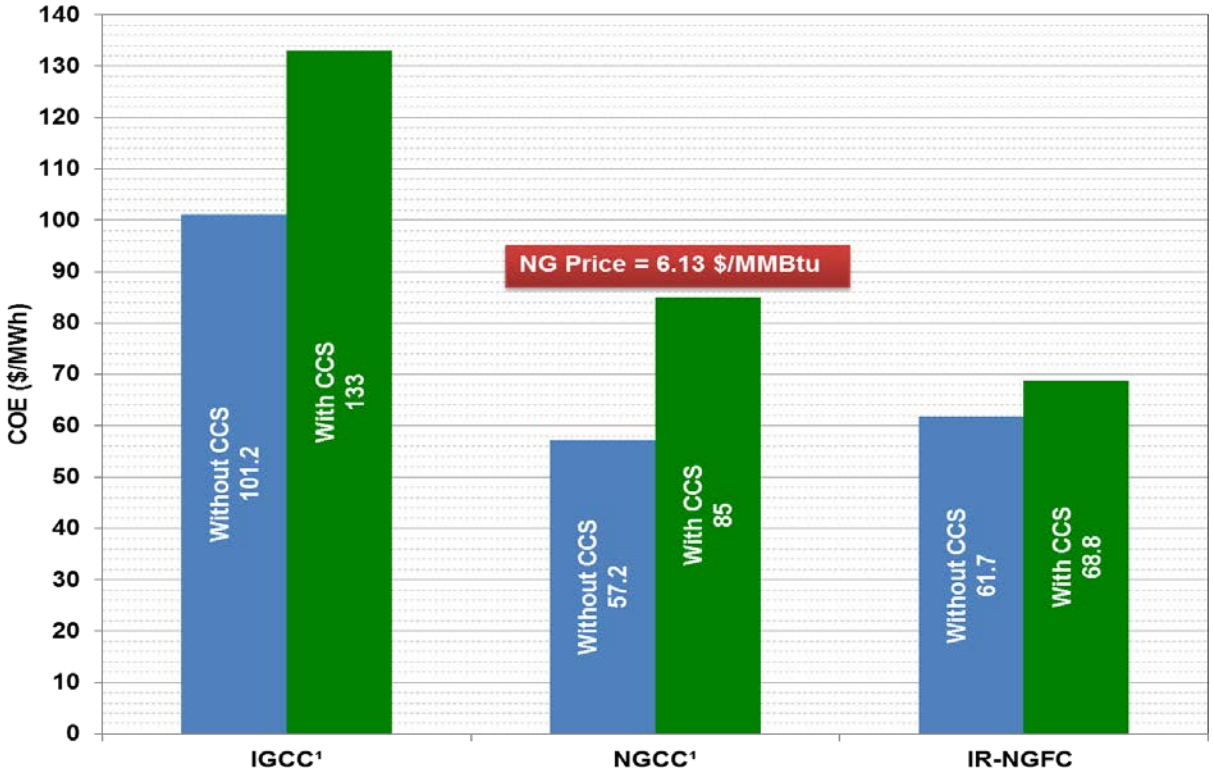

Source: NETL

[1] The CO_2 T&S charges are not included in the COE values shown for both the NGCC and IGCC system with CCS. A comparison of the corresponding COEs with CO_2 T&S charges will further favor the IR-IGFC system for the CCS option due to its considerably higher efficiency, which reduces the amount of CO_2 production.

1 Introduction

Natural Gas Fuel Cell (NGFC) systems that feature complete internal reformation (IR) of the natural gas (NG) within the Solid Oxide Fuel Cell (SOFC) stack are particularly attractive due to their higher electric efficiency coupled with lower costs relative to their counterparts that rely, either partly or fully, on external reformation of NG to produce syngas. Internal reformation, while eliminating the need for specialized process equipment, utilizes heat generated in the SOFC stack directly for the endothermic reformation reaction, and reduces the air flow rate needed to maintain a desired stack temperature gradient resulting in higher process efficiency. Accordingly, NGFC systems with complete IR form the ultimate embodiment of the current SOFC technology development program at the National Energy Technology Laboratory (NETL), which is consistent with the commercialization strategies being pursued by SOFC industrial teams in the stationary power generator sector. The performance and cost of a NGFC system with IR with carbon capture and sequestration (CCS) is presented in this report. The system also includes a carbon dioxide (CO_2) purification unit (CPU) to meet enhanced oil recovery (EOR) requirements. Stack degradation limits the operating lifetime of the capital intensive SOFC stack and forms a significant component of the production costs. Modified stack operational procedures, in addition to installation of extra area, common practical solutions generally used to mitigate adverse effects of stack degradation, were also modeled.

2 NGFC Process

The IR-NGFC process, shown in Exhibit 2-1, was simulated using the Aspen Plus® (Aspen Technology, Inc.) platform. Desulfurized natural gas is fed directly to the SOFC module and mixes with the recirculated anode off-gas, which supplies the steam required for reformation of inlet NG to syngas. To prevent cracking and deleterious carbon formation, a pre-reformer, which converts the higher hydrocarbons into methane, is generally included before completing the reformation internal to the stack. The anode off-gas recirculation rate is also maintained at an oxygen-to-carbon ratio of 2.1 to avoid carbon formation anywhere in the fuel path. Internal reformation, while eliminating the need for specialized process equipment, utilizes heat generated in the stack directly for the endothermic reformation reaction, and reduces the air flow rate needed to maintain a desired stack temperature gradient resulting in higher process efficiency. The oxidant is supplied to the cathode by an air blower, and heat exchangers on both the anode and cathode side are appropriately designed to keep the desired temperature gradient across the stack. A cathode-gas recirculator is also included to modulate the air-side heat exchanger size. The heat from burning the electrochemically unutilized fuel to completion in an oxygen (O_2) driven (oxy-) combustor is transferred to a steam bottoming cycle. Waste heat from the cathode exhaust is transferred to the steam cycle after satisfying the steam requirements of the cryogenic air separation unit, which is used to supply the O_2 to the combustor.

Exhibit 2-1 IR-NGFC process diagram

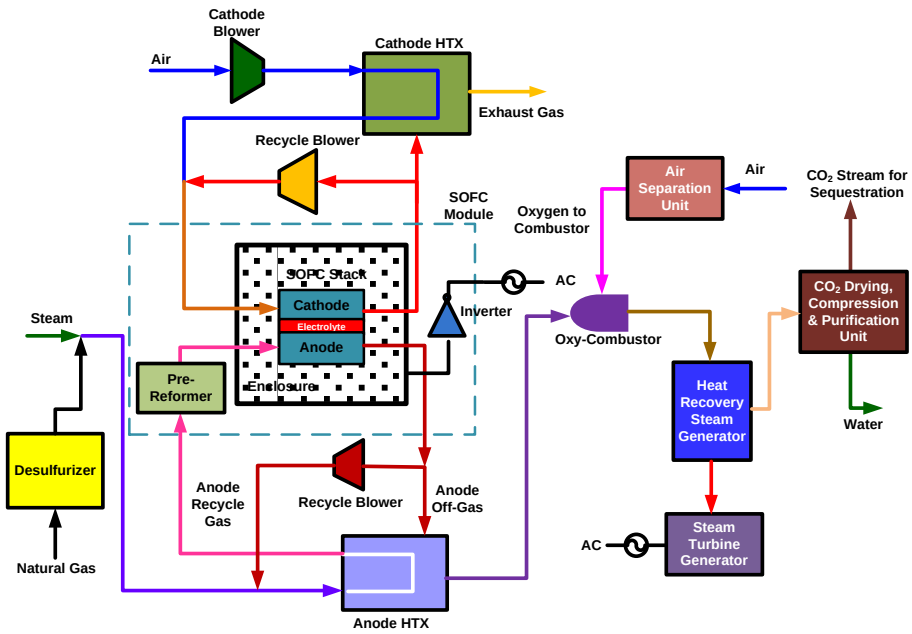

Source: NETL

2.1 CO_2 Purification Unit

The IR-NGFC system includes a cryogenic distillation-based CO_2 purification process, shown schematically in Exhibit 2-2, to purify the CO_2 product stream to EOR requirements. (4) The CO_2 stream is dried and liquefied by cooling to -60°F (to avoid the triple point to avert solid CO_2 formation), immediately following the initial compression to 30 bar (~450 psia). A distillation process subsequent to a phase separation stage immediately following liquefaction is used to purify the CO_2 stream to EOR levels[1]. The cooling for the liquefaction is accomplished by a combination of external refrigeration and recuperative heat exchange with vent gases from the downstream distillation steps.

The Aspen model of the corresponding process utilizes a RadFrac distiller with twenty stages to model the distillation, which is essentially a stripping column. An Aspen design spec that varied the boil-up ratio was used to control the O_2 purity at the exit of the distiller to a value of 10 ppm[2]. The reboiler heat was not assumed to be integrated with the external refrigeration cycle, which was not modeled.

[1] The QGESS reference (4) recommends a purity of the CO_2 at least 95 percent, as a conceptual design basis for EOR purposes; however, distillation methods used to meet the more stringent O_2 concentration requirement of 100 ppmv or less generally result in 99.9 percent + CO_2 purity.

[2] An O_2 concentration of 10ppmv in the CO_2 product stream was selected as the basis for conceptual design since it represents the lower limit of the range of values recommended in literature (4) for EOR applications. The number of distillation stages can be reduced slightly to design to the upper limit of 100 ppmv for O_2 concentration. (4) However, the impact of the associated small decrement in distillation cost on the overall cost is expected to be insignificant.

Exhibit 2-2 CO_2 purification process

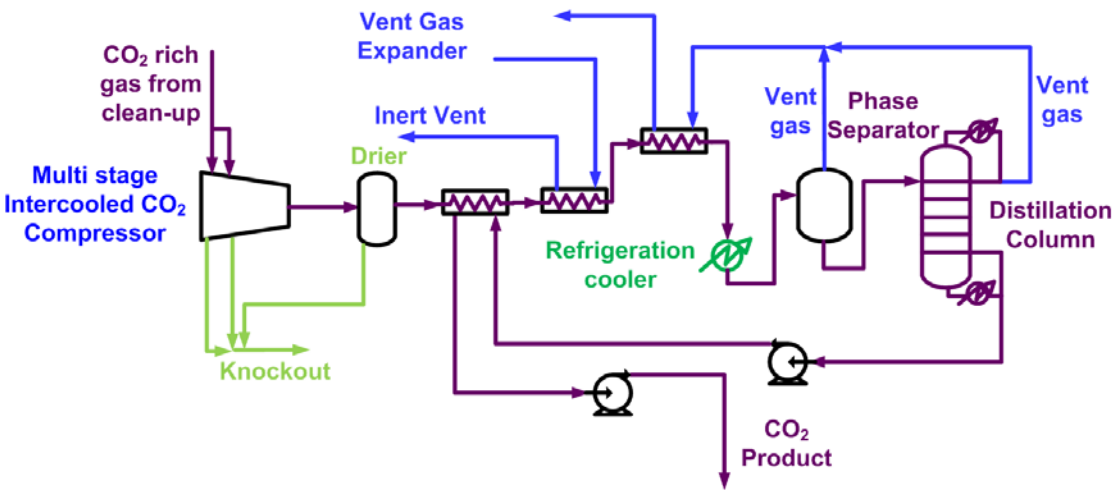

Source: NETL

3 Stack Degradation and Production Costs

Solid oxide fuel cells have the potential to operate over a long period of time, which has been demonstrated in laboratory scale tests, where operation for over five years has been demonstrated without appreciable loss of performance. (5) However, with current planar stack technologies, stack performance has been observed to decline over its lifetime, generally due to an increase in the apparent electrical resistance of the stack associated with a variety of material and design related factors, which limits the permissible current at the same voltage (in a constant voltage operation mode). Performance degradation limits the operating lifetime of the capital intensive SOFC stack and forms a significant component of the production costs. Apart from long-term material developments, practical considerations to mitigate the adverse effects of stack degradation are investigated here to enable an estimation of the production costs that is consistent with industry practice.

3.1 Stack Degradation

Stack performance degradation rates are generally between 1 to 2 percent per 1000 hours with current stack technology. (6) Reducing stack degradation to values below the 0.2 percent per 1000 hours generally observed with conventional heat engine-based power generation systems (7) forms the focus of current SOFC research and development. Published experimental data on the long-term (over 20,000 h) cell performance degradation data is generally limited to tubular cell designs. Exhibit 3-1 shows intermediate duration (~ 1 yr, 8000 h) performance degradation data for planar cell taken from the SOFC system study of Thijssen. (7) While the cell performance degradation rate, usually expressed as a loss in cell voltage (mV) per 1000 h, suggests a constant degradation rate with a linear decay of cell voltage with time, a first-order degradation model appears to fit the experimental data better (Exhibit 3-1). (7) The linear degradation model is determined by setting the initial voltage and a degradation rate. On the other hand, the first order model also needs the prescription of an asymptotic value. An initial degradation rate of 1.65 percent per 1000 hours along with an asymptotic value of ~0.710 V demonstrated a good fit to the data.

With a nickel-cermet anode, the nickel oxidation potential, which is ~0.700 V for the range of temperatures of interest, sets a lower limit for cell voltage. In practice, the stack is generally operated at a voltage with sufficient margin over the nickel oxidation potential to minimize potential operational risks[1] associated with temperature and cell resistance variations within a stack. The linear degradation model results in a stack lifetime of ~7 months (0.6 yr), whereas the first order model predicts a 50 percent higher stack lifetime of ~11 months (0.9 yr), assuming that the lower limit of stack voltage is 0.75 V (50 mV greater than the nickel-oxidation potential) from an operational perspective. It is clear that the reality lies somewhere in between these two extreme limits.

Exhibit 3-1 Cell degradation data and model fits (7)

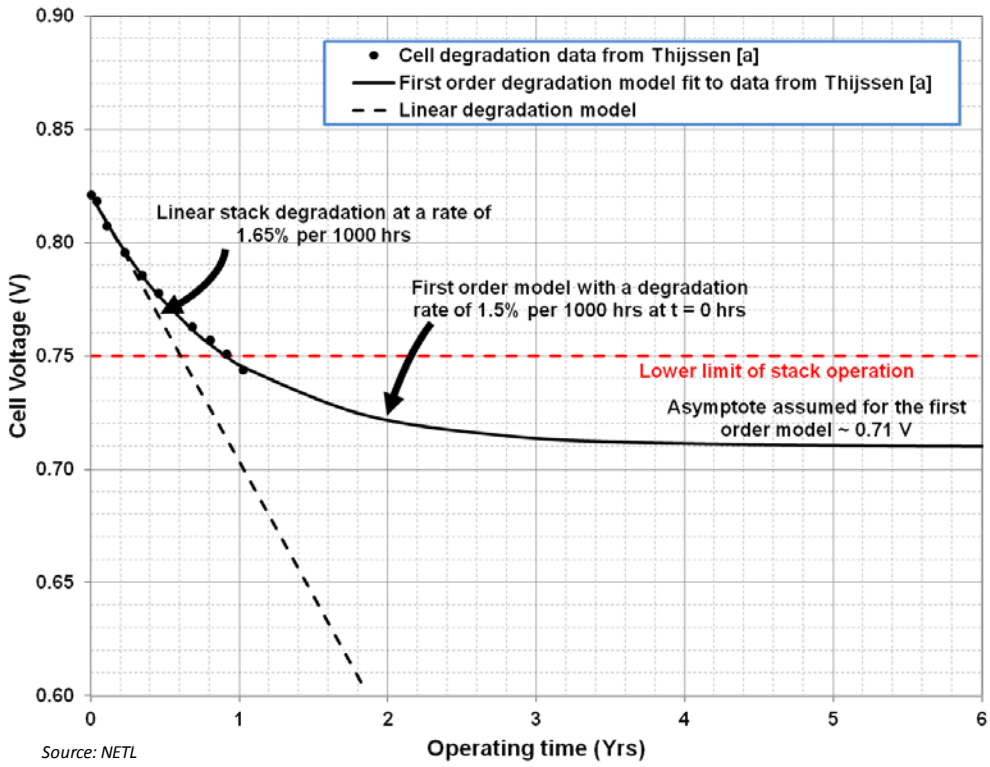

Source: NETL

3.2 Degradation and Operation

If the stack is operated at constant current as in the experimental data depicted in Exhibit 3-1, the stack power decreases quickly with time, which is commercially unattractive due to its detrimental effects on warranty costs. One way of prolonging the stack lifetime and still maintain the rated power is to provide additional capacity in the form extra stack surface. In theory, the system can be designed to periodically enable additional SOFC area online, to maintain a near-constant plant power output from the SOFC system. However, this approach is

[1]The nickel oxidation potential represents the voltage at which the nickel in the anode is getting oxidized, which often results in delamination of the anode leading to cell failure that could cascade into a catastrophic failure of the stack.

often economically prohibitive, and in practice, constant power output is maintained by operating the stack at a voltage above the design voltage (and the current below the design value) initially, and subsequently increasing the current as the stack voltage declines. While this approach is effective in maintaining a constant power output from the SOFC stack, the system efficiency varies from a value that is higher than the nominal value to a value below it over the stack lifetime. The corresponding stack operational scenarios, which effectively compensates for stack degradation, were modeled to optimize the extra area installed and evaluate the corresponding stack replacement period.

Both linear and first-order degradation models were investigated in the present study. Performance degradation rates were varied between 0.1 to 2 percent per 1000 hours along with a consideration of extra installed areas up to 500 percent of the nominal design area. The assumed stack voltage variations and the corresponding variations in the area specific resistance (ASR) of the stack (at a current density of J = 400 mA/cm^2) are shown in Exhibit 3-2 for different degradation rates. The degradation rate is the slope of the voltage decay for the linear model while it represents the gradient of the voltage curve at t = 0 h for the first order model. The initial cell voltage (at t = 0) and the Nernst voltage match the system model calculations. An asymptote of 0.7 V is used for the first order model. The corresponding power output is shown in Exhibit 3-3. With no additional area installed, stack power decreases rapidly with time at the 1.5 percent per 1000 hours degradation rate of the current technologies and a stack replacement is warranted almost within a year of operation. It also shows that a degradation rate of 0.2 percent per 1000 hours or below is required for an attractive commercial proposition.

The cell voltage, V_t, at time, t, is related to its instantaneous current density, J_t, and the ASR, Ω_t, by the equation,

$$V_t = E - J_t \Omega_t \tag{1}$$

where E is the inlet Nernst potential. Multiplying Equation 1 by the instantaneous current, $I_t = J_t A$, we get,

$$P = V_t I_t = E I_t - \frac{I_t^2 \Omega_t}{A} \tag{2}$$

where P is the power generated and A is the total installed area.

Assuming that the ASR is independent of current density, variation of $\Omega_t = f(t)$ can be evaluated using (1), which enables the computation of the instantaneous current and current density to maintain constant power, P, using Equation 2. The corresponding instantaneous voltage can be obtained by simply dividing the power value by the current. This process can be carried out for different values of the installed area.

Exhibit 3-2 Cell voltage and ASR variations for the degradation models

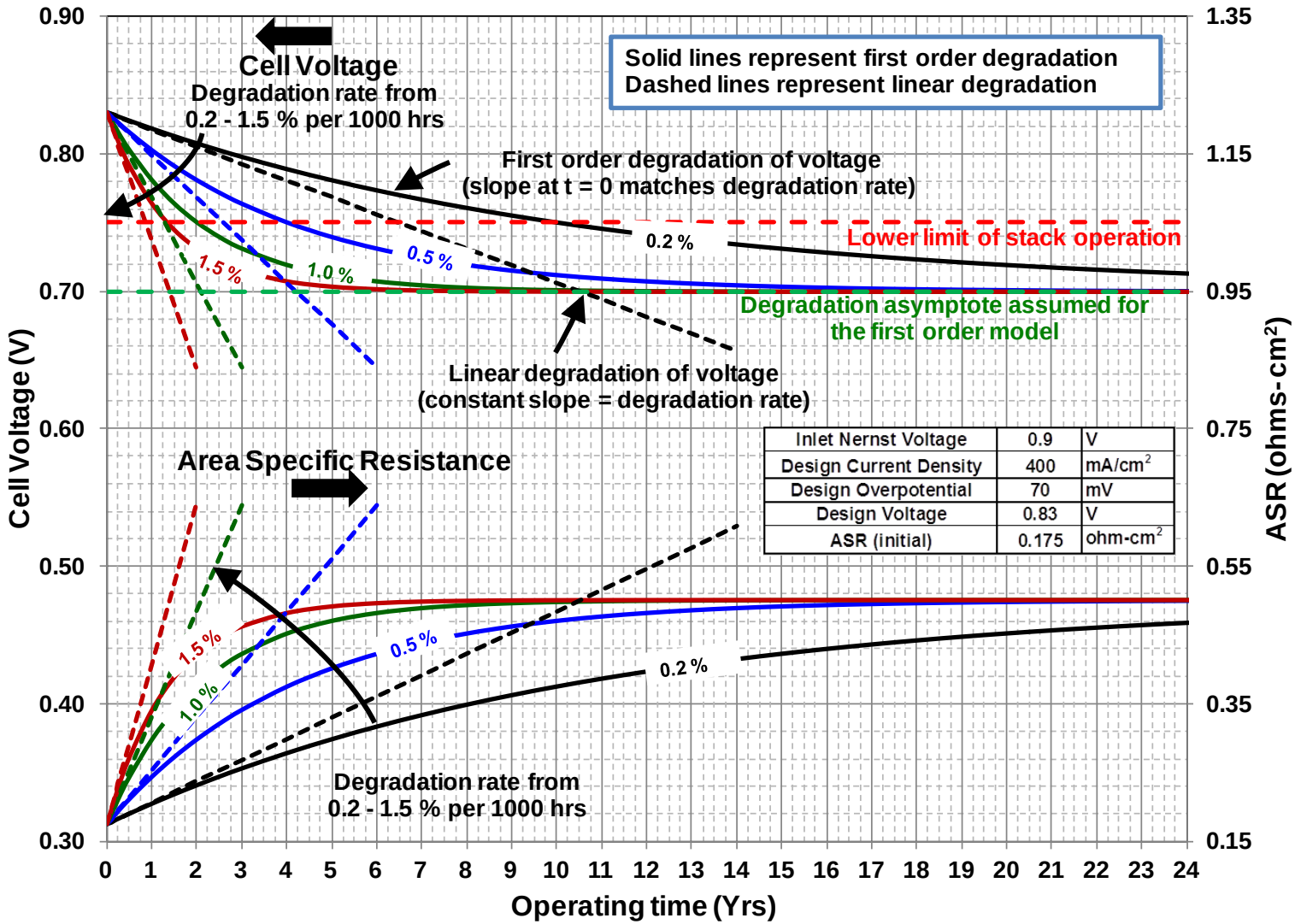

Inlet Nernst Voltage	0.9	V
Design Current Density	400	mA/cm²
Design Overpotential	70	mV
Design Voltage	0.83	V
ASR (initial)	0.175	ohm-cm²

Source: NETL

Exhibit 3-3 Power variation with time for the two degradation models

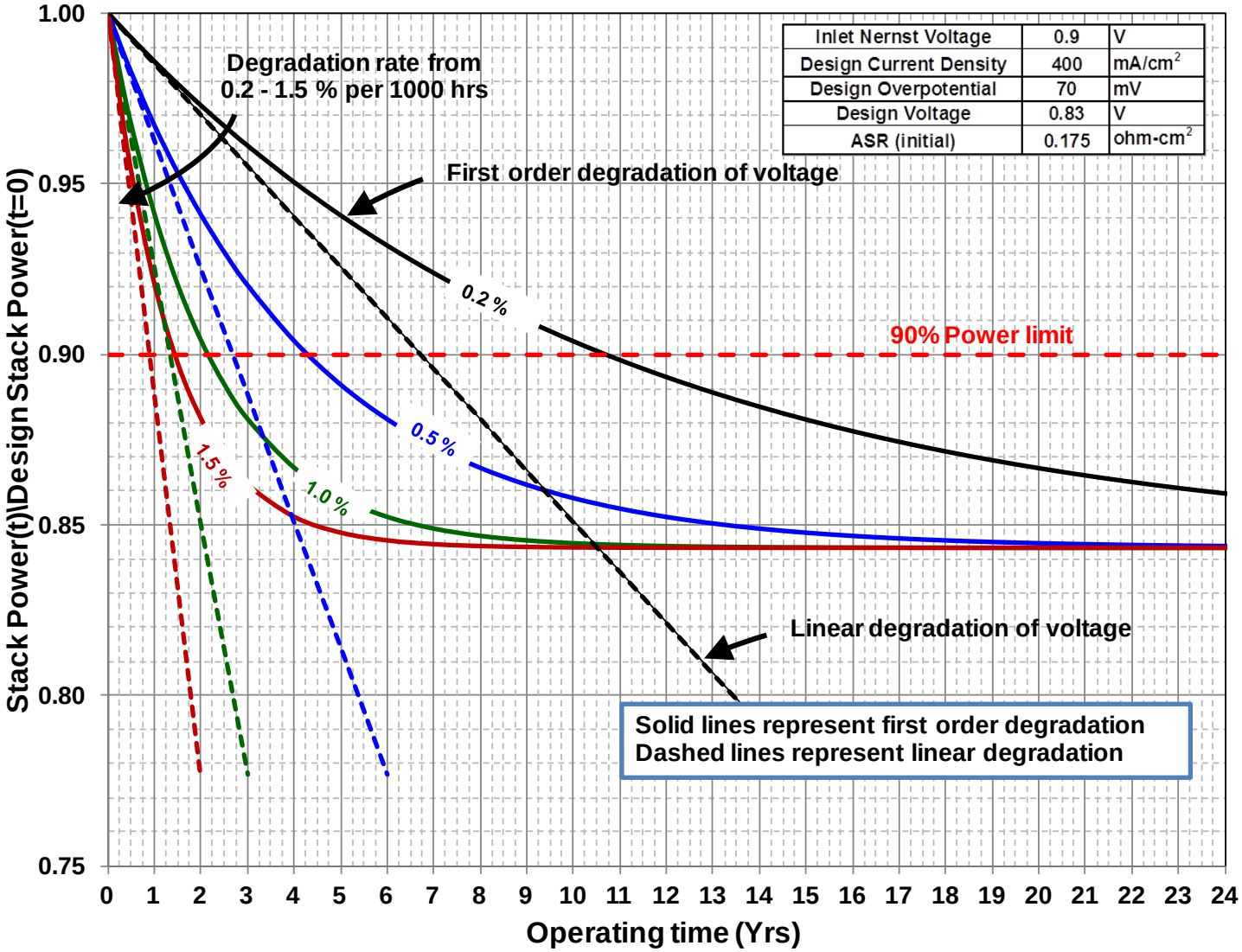

Source: NETL

Exhibit 3-4 shows the results for a degradation rate of 1.5 percent per thousand hours for 50 percent extra installed area (total area 1.5 times nominal area) using a linear voltage degradation model. The voltage versus current density (computed using the total area including the extra installed area) decay with time (stack performance degradation) is plotted along with the operating points, the V-J pairs, at which the power output is the same as the design power output (also shown in the figure). The efficiency normalized to its design efficiency, however, decreases with time due to the increasing current (or fuel flow rate) at the V-J pairs for the same power output. Assuming a stack voltage limit of 0.75 V, the addition of the 50 percent extra area along with the modified operating curve extends the life of the stack from ~9 months to ~12 months (~35 percent increase in stack life) while maintaining the power output at its design levels. The corresponding result assuming a first order degradation model with the same 1.5 percent per 1000 hour degradation rate initially, shown in Exhibit 3-5, indicates a longer stack life of 16 months for the same extra installed area. The stack life increases, but not in direct proportions as the amount of extra installed area is increased, as shown in Exhibit 3-6, which indicates that installation of 100 percent additional area (over the nominal design) extends the stack life to ~18 months. At an initial degradation rate of 0.2 percent per 1000 hours, the stack life is ~10 yr, as shown in Exhibit 3-7, assuming a first order degradation process.

Installation of additional area instantly reduces the current density at which the stack operates. Even with the operational scenarios described, which require operation at progressively increasing current densities, the operating current density is still below the design current density due to the additional area. The tendency of operating at the reduced current density to mitigate stack degradation rates presents a secondary benefit that is not taken into account in the present calculations.

The variation of stack replacement period (or stack life), defined as the time before the stack voltages reaches the operating limit of 0.75 V, with the degradation rate and the amount of extra area installed is shown in Exhibit 3-8 and Exhibit 3-9 for the linear and first order degradation models, respectively. An average of the results of the two degradation models is shown in Exhibit 3-10. The first order degradation assumption results in stack life values that are generally 25 percent higher than the values computed assuming a linear degradation. In most of the cases, adding extra area beyond 100 percent yields diminishing returns. The average yearly cost of stack over stack life is shown for different amounts if extra installed area for a 0.2 percent per 1000 hours degradation rate is shown in Exhibit 3-11. A 10 percent extra installed area appears to be an optimum value for both the models at this degradation rate as it results in the lowest normalized yearly stack cost. At this point the stack life is predicted to be ~6.4 years and 8.1 years for the linear and the first order models, respectively. Accordingly, a stack with additional 10 percent area with an average stack replacement period of 7.3 years was assumed for the Nth of a kind NGFC unit in the cost of electricity calculations.

Exhibit 3-4 Constant power operation scenario at 1.5% per 1000 hrs linear degradation rate with 50% extra installed area

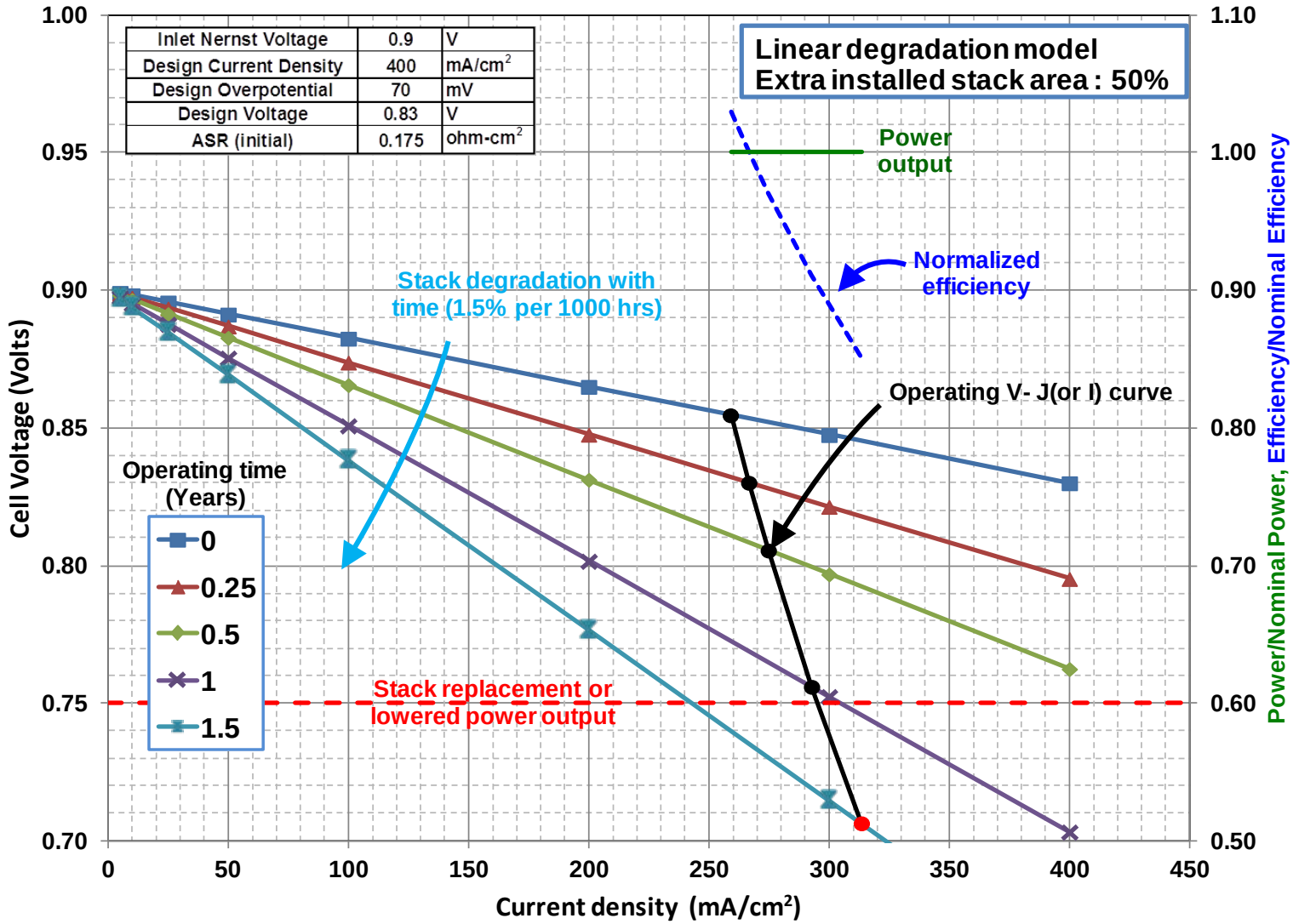

Source: NETL

Exhibit 3-5 Constant power operation scenario with first order degradation for an initial rate of 1.5% per 1000 hrs with 50% extra installed area

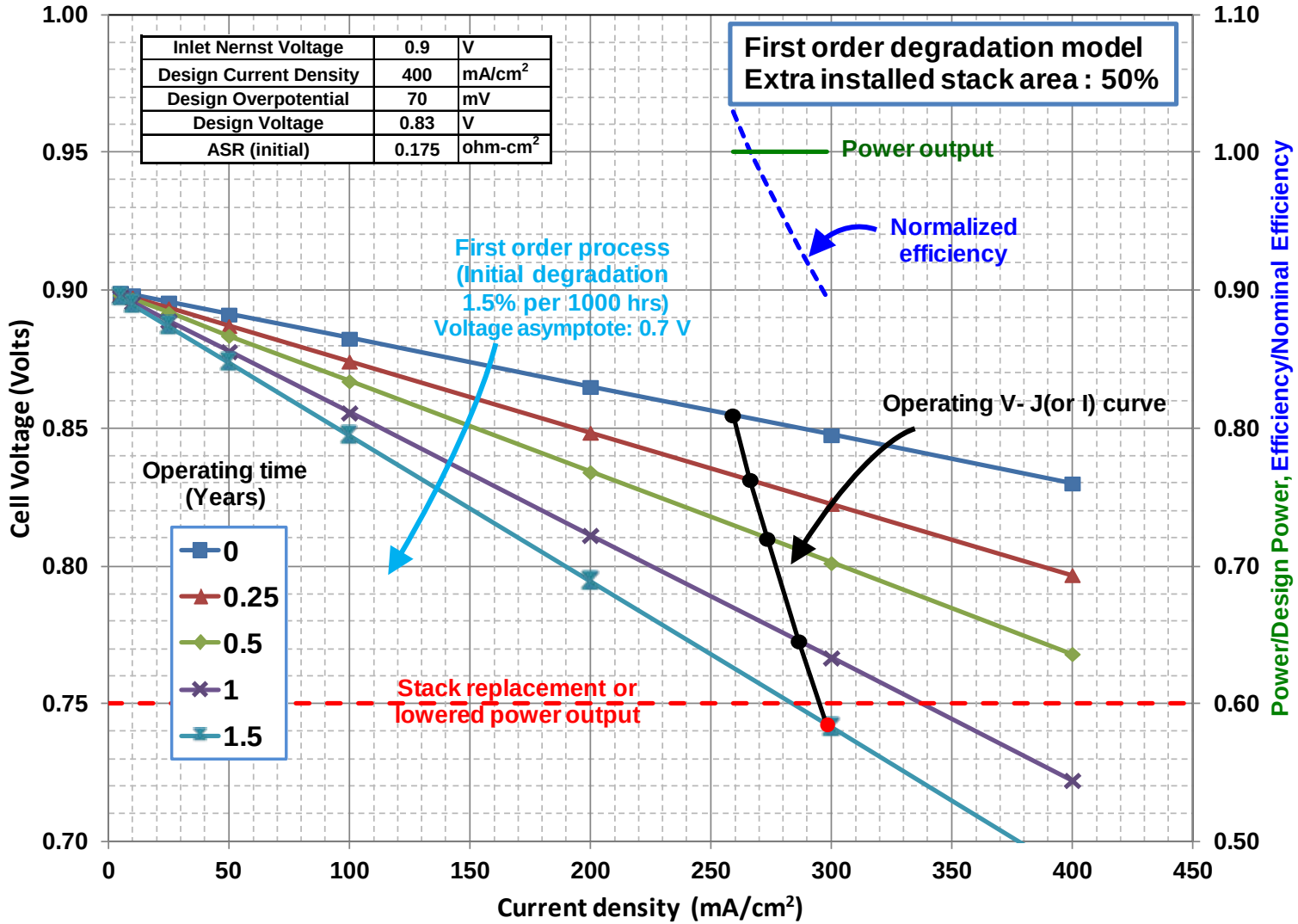

Source: NETL

Exhibit 3-6 Constant power operation scenario with first order degradation for an initial rate of 1.5% per 1000 hrs with 100% extra installed area

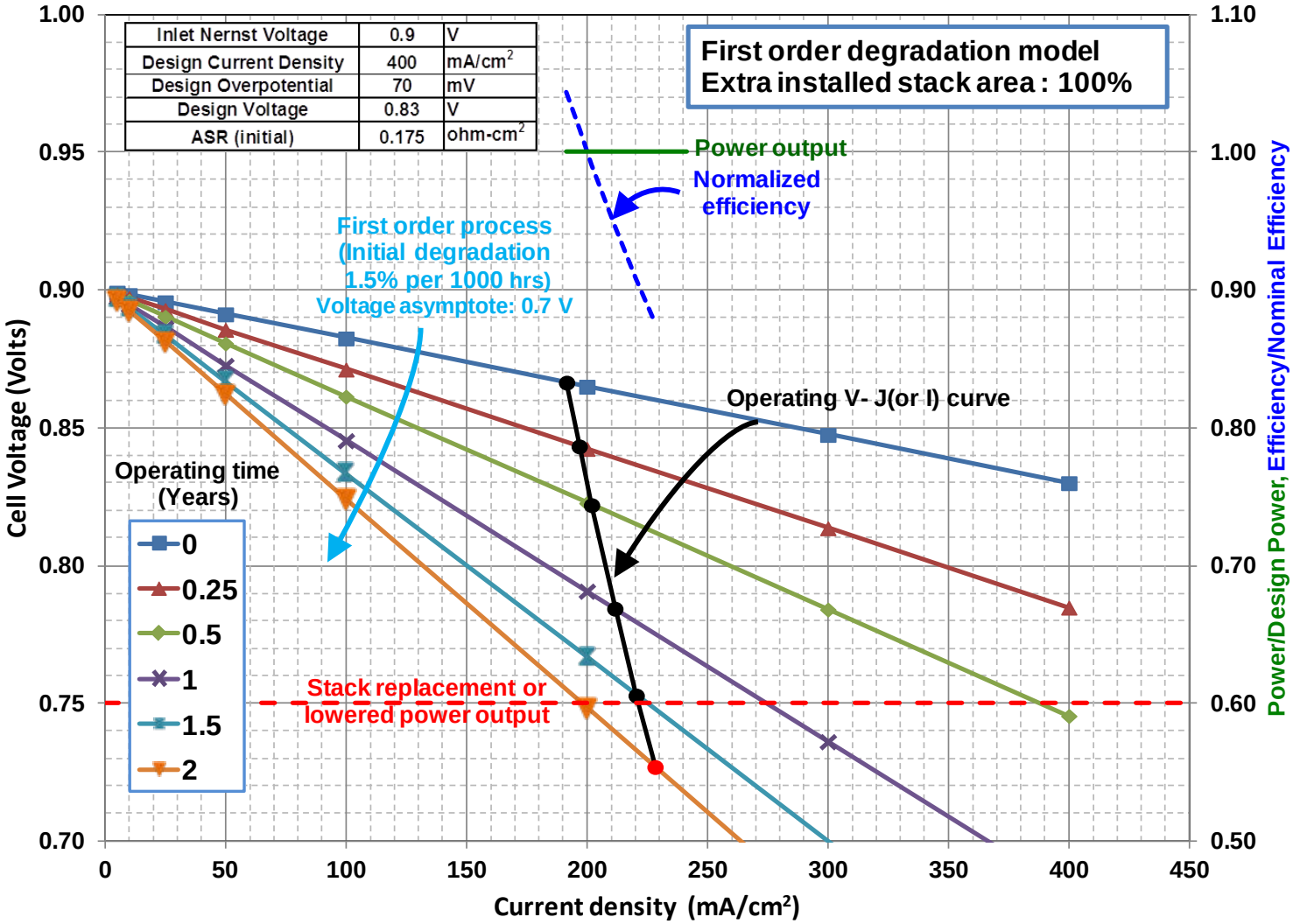

Source: NETL

Exhibit 3-7 Constant power operation scenario with first order degradation for an initial rate of 0.2% per 1000 hrs with 100% extra installed area

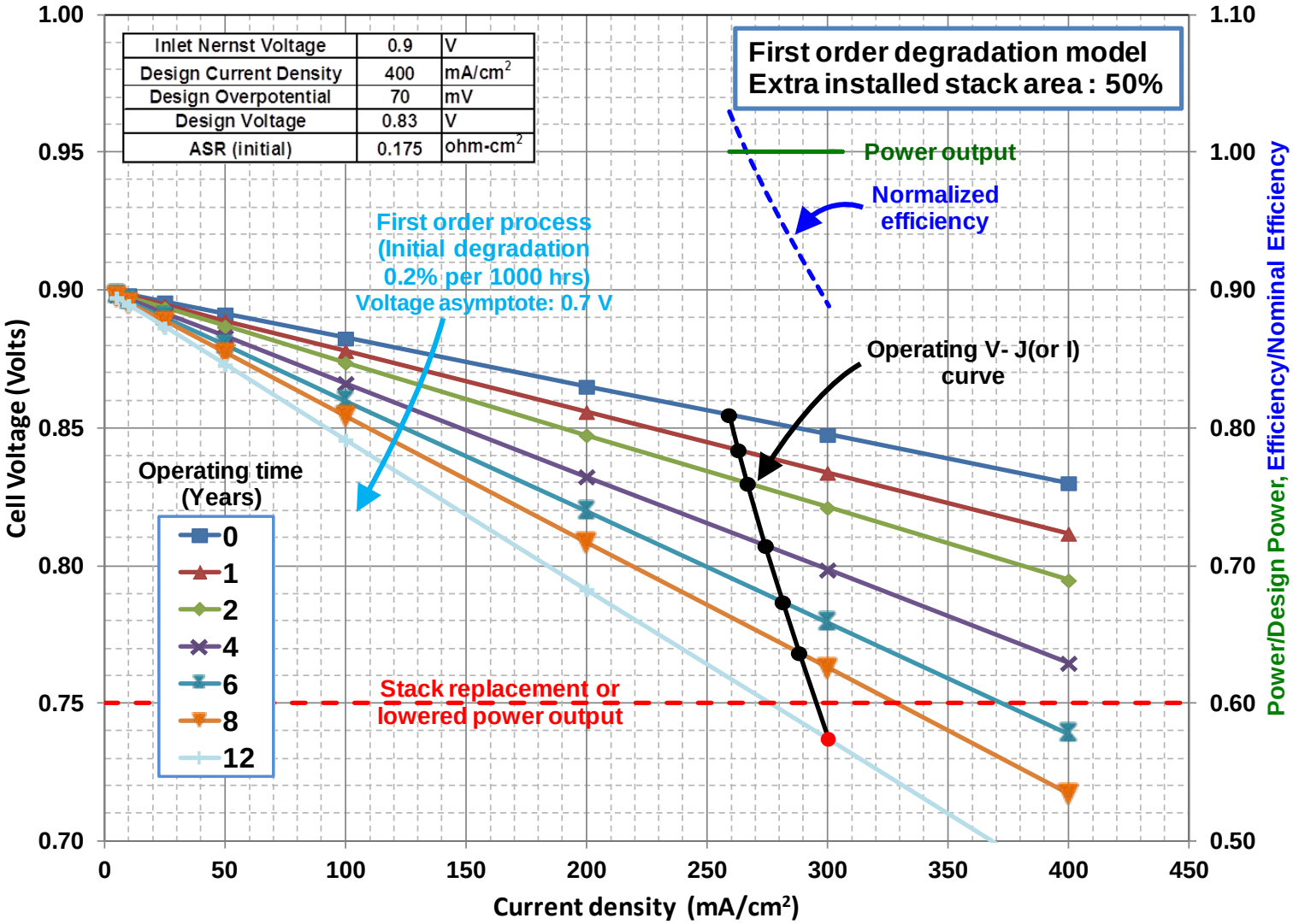

Source: NETL

Exhibit 3-8 Variation of stack replacement period with degradation rate and extra installed area assuming linear degradation

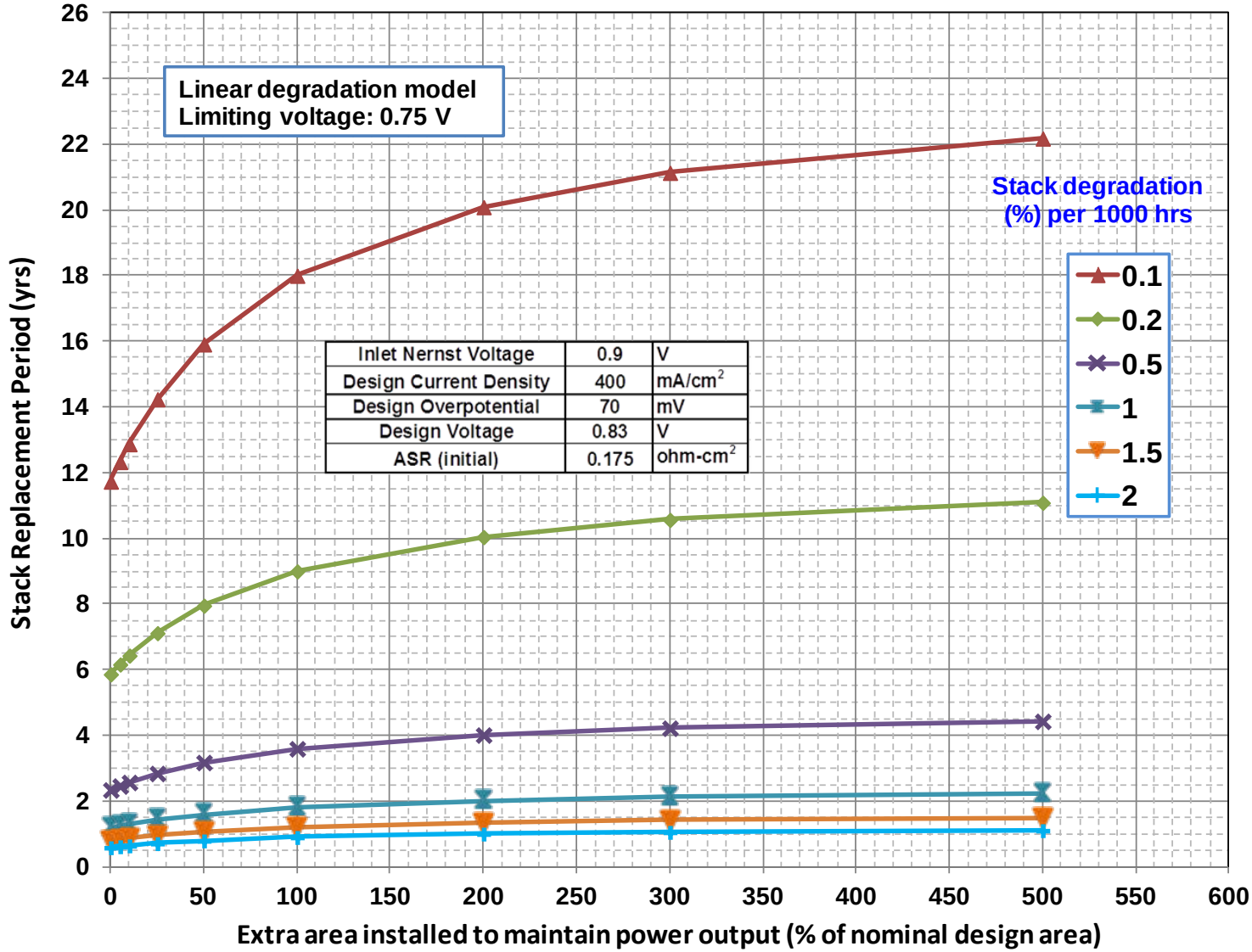

Source: NETL

Exhibit 3-9 Variation of stack replacement period with degradation rate and extra installed area assuming first order degradation

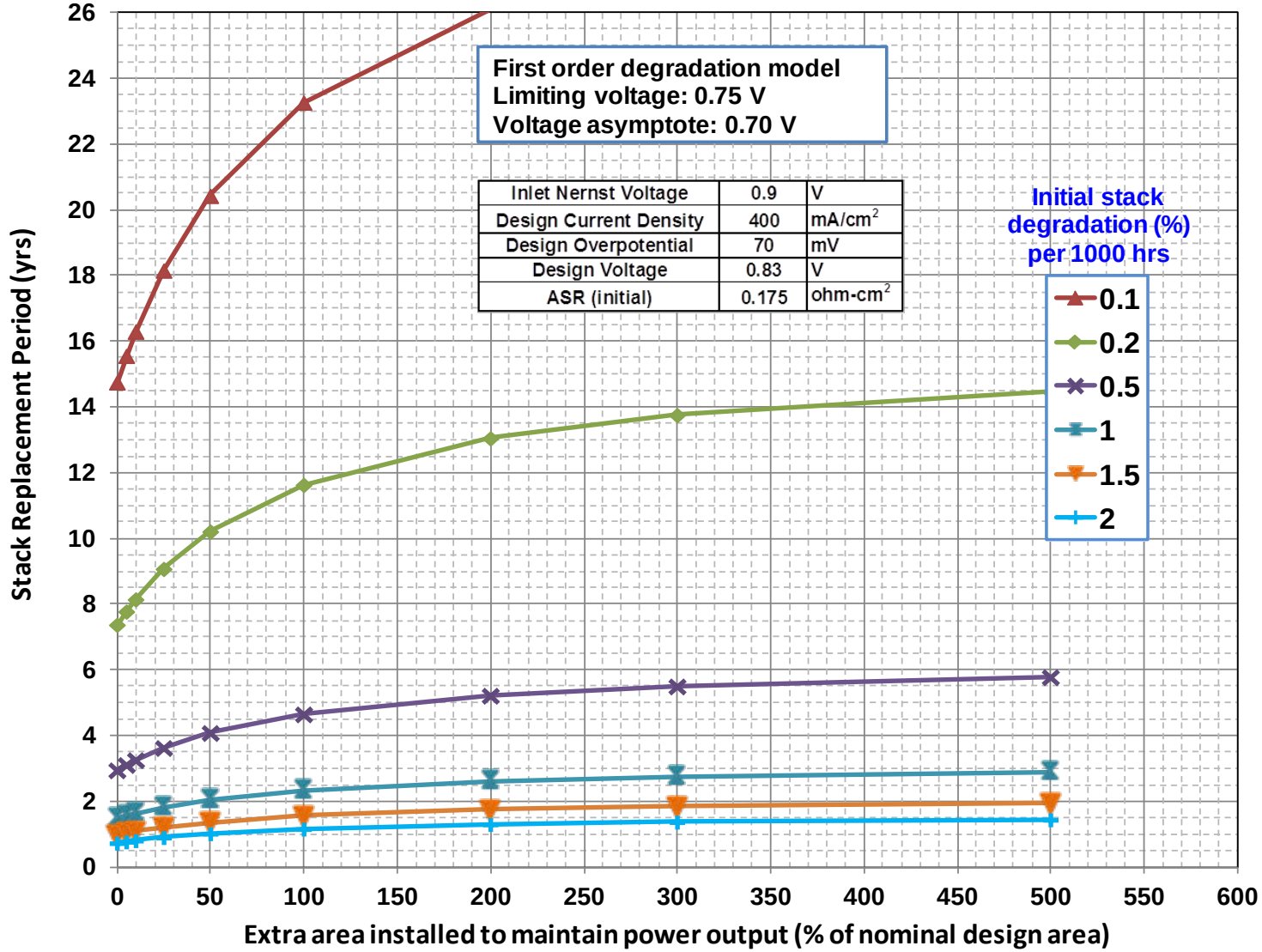

Source: NETL

Exhibit 3-10 Variation of the average stack replacement period with degradation rate and extra installed area – average of the values form the two models

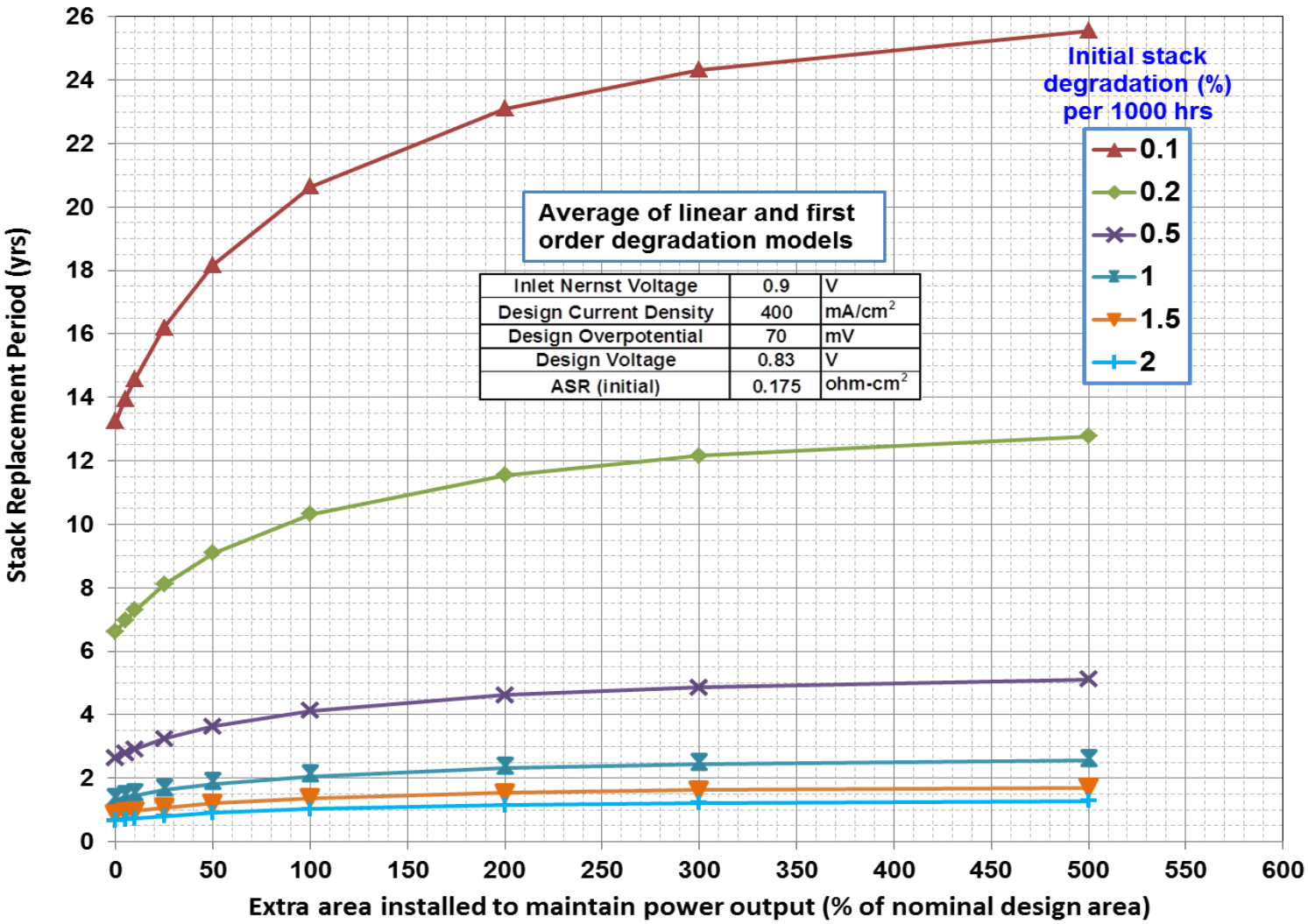

Source: NETL

Exhibit 3-11 Average yearly cost of stack and the number of stack replacements per year for a 0.2% per 1000 hrs degradation rate for the two models

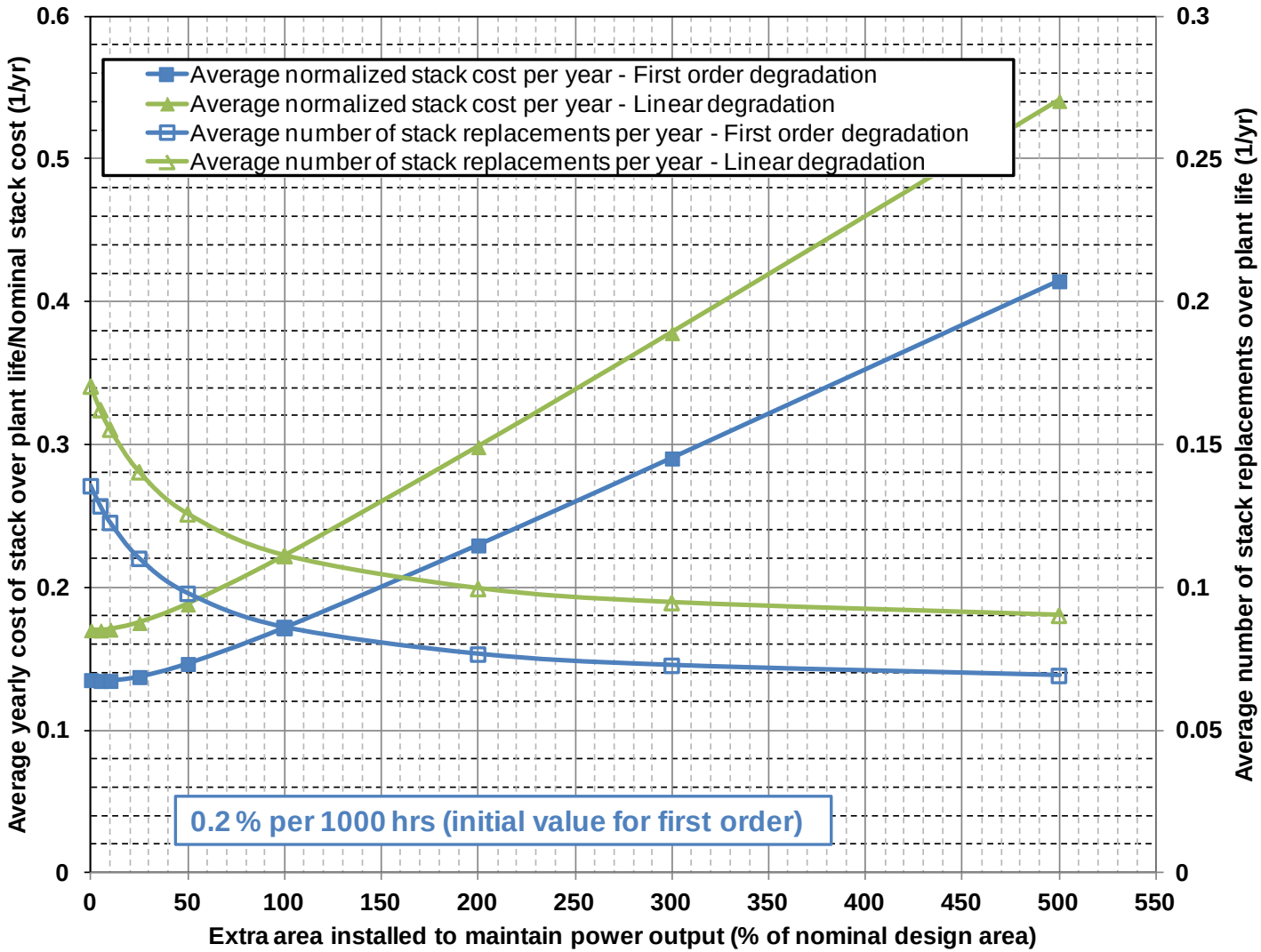

Source: NETL

4 Cost Estimation

The NGFC plant costs were estimated in 2011 dollars based on the earlier NGFC study (1) and BB report (2). The NGFC power island configuration is shown in Exhibit 4-1 and is based on a generic planar technology power island. It consists of several parallel trains of modularized SOFC sections each consisting of 42 planar SOFC modules. A block is defined to be a stack of 96 SOFCs with 550 cm^2 effective area and 64 blocks comprise a single SOFC module. The module envelope, as shown in Exhibit 2-1, is defined to include, in addition to the SOFC stacks, the enclosure, the pre-reformer, and the inverter. The incoming natural gas fuel is distributed into each section, which also houses an individual SOFC BOP including a desulfurizer, an air blower, recycle blowers, and heat exchangers. A single ASU is assumed to drive an oxy-combustor, which is fed with to the anode off-gas collected from all the sections.

Exhibit 4-1 NGFC power island configurations

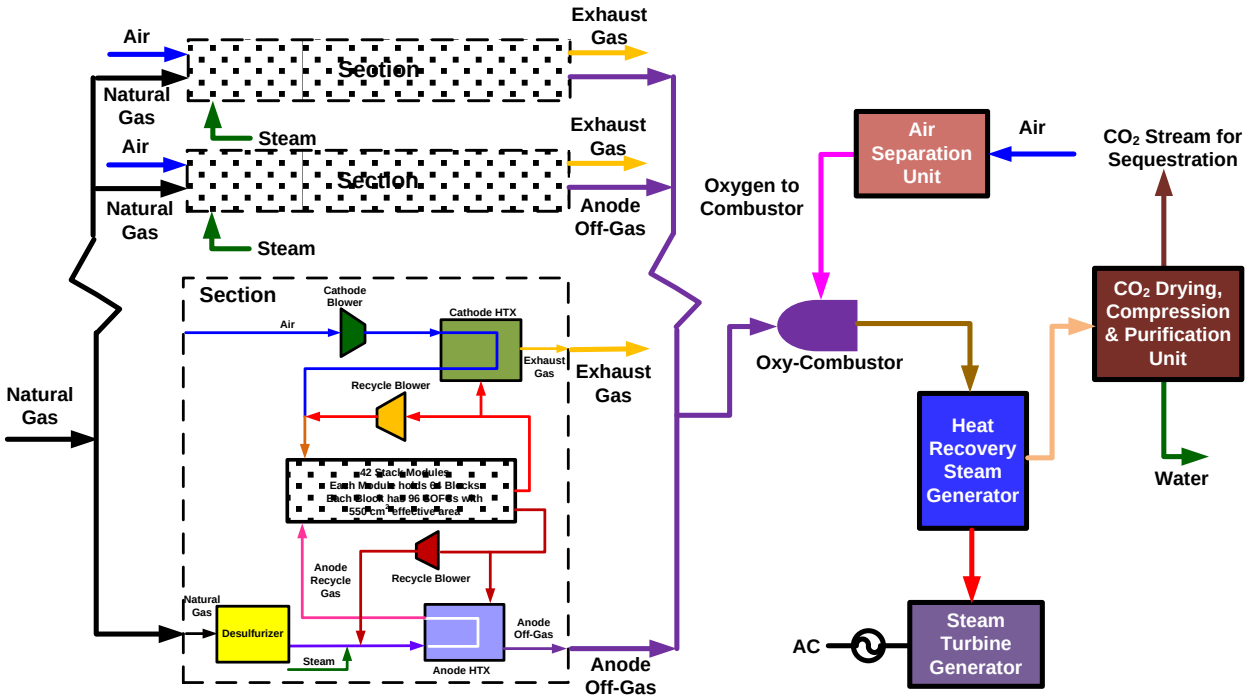

Source: NETL

The NETL goal of $225/kWe (in 2011 dollars) for the stack cost forms the basis for the SOFC stack cost calculations. The module costs in 2011 dollars are summarized in Exhibit 4-2 and include the module transport and placement costs and the site foundation costs, which represent the costs associated with the installation of each module. The total module cost including the 10 percent additional SOFC stack area installed, as per the discussion in the previous section, is also shown in the exhibit. The SOFC balance of plant (BOP) costs are tabulated in Exhibit 4-3.

Exhibit 4-2 SOFC module costs in 2011$

Module Costs ($/kWe)	2011$
SOFC Stack	225
Enclosure	30
Transport & Placement	14
Site Foundations	44
Inverter	68
Pre-Reformer	29
Total Module	411
Total Module with 10% extra installed area for 0.2% per 1000 h stack degradation	452

Exhibit 4-3 SOFC BOP costs in 2011$

BOP Costs ($/kWe)	2011$
Desulfurization System	2
Cathode Air Blower	3
Cathode Gas Recycle Blower	6
Cathode Heat Exchanger	67
Anode Recycle Blower	1
Anode Heat Exchanger	2
Oxy-Combustor	16
Total SOFC BOP	97

The costs associated with the air separation unit (ASU), the steam cycle, the cooling water system, and other usual plant costs are based on BB cost updates (2). The cost of CO_2 purification unit was based on an available quote. Exhibit 4-4 lists the relevant O&M. The CO_2 transport and storage costs (T&S) were estimated at $11/tonne CO_2. (8)

Exhibit 4-4 O&M costs in 2011$

O&M Costs	Specific Cost
	2011$
Operating Labor Rate ($/h)	34.65
Stack Replacement O&M ($/h)	16
Water ($/1000 gal)	1.08
Chemicals ($/lb)	0.17
NG Desulfurizer TDA Absorbent ($/lb)	5.0

5 Performance

The IR-NGFC process with the CPU, which is shown in Exhibit 5-1, results in a net plant efficiency of ~64.7 percent (HHV) as summarized in Exhibit 5-2. The stream table corresponding to the IR-NGFC process in Exhibit 5-1 is shown in Exhibit 5-3 while detailed process flow diagrams and mass and energy balance tables are presented in Exhibit 5-4 through Exhibit 5-6. The analogous diagrams and tables for the IR-NGFC system without a CPU are included in Appendix A for comparison.

Exhibit 5-1 Block flow diagram of the IR-NGFC system with CPU

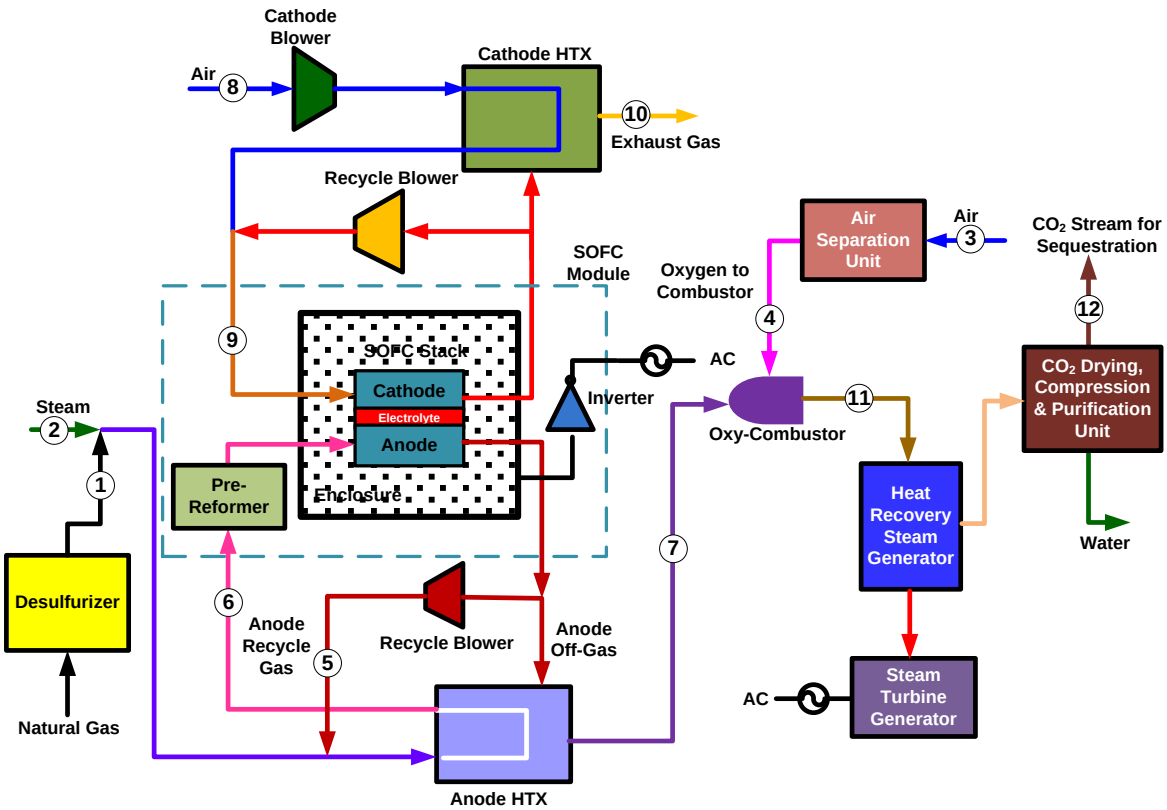

Source: NETL

Exhibit 5-2 Performance of the IR-NGFC system with and without the CPU

	Present Study	
CARBON DIOXIDE PURIFICATION	Yes	No
SOFC OPERATING CONDITIONS	Atmospheric Overpotential = 70 mV	
POWER SUMMARY (Gross Power at Generator Terminals, kW_e)		
SOFC Power	537,600	530,100
Natural Gas/Syngas Expander Power	-	-
Anode Expander	-	-
Steam Turbine Power	63,500	62,400
TOTAL GROSS POWER (kW_e)	601,100	592,500
AUXILIARY LOAD SUMMARY, kW_e		
Air Separation Unit Auxiliaries	144	142
Air Separation Unit Main Air Compressor	6,680	6,580
CO_2 Compressor	16,000	20,120
CO_2 Purification	12,554	-
Boiler Feedwater Pumps	1,102	1,083
Condensate Pump	82	81
Circulating Water Pump	1,590	1,600
Cooling Tower Fans	830	840
Steam Turbine Auxiliaries	26	26
Cathode Air Blower	4,050	3,640
Cathode Recycle Blower	3,870	4,130
Anode Recycle Blower	1,830	1,950
Miscellaneous Balance of Plant[2]	344	339
Transformer Losses	1,940	1,890
TOTAL AUXILIARIES, kW_e	51,042	42,421
NET POWER, kW_e	550,058	550,079
NET PLANT EFFICIENCY, % (HHV)	64.7	65.6
NET PLANT HEAT RATE, kJ/kWh (Btu/kWh)	5,567 (5,277)	5,489 (5,202)
CONDENSER COOLING DUTY 10^6 kJ/h (10^6 Btu/h)	369 (350)	369 (350)
CONSUMABLES		
As-Received Coal Feed, kg/h (lb/h)	58,389 (128,725)	57,563 (126,905)
Thermal Input[1], kWt	850,673	838,646
Raw Water Consumption, m^3/min (gpm)	2.9 (754)	2.9 (768)

[1] *HHV of Natural Gas is 53,103 kJ/kg (22,830 Btu/lb)*
[2] *Includes plant control systems, lighting, HVAC, and miscellaneous low voltage loads*

Exhibit 5-3 Stream table for the IR-NGFC system with CPU

	1	2	3	4	5	6	7	8	9	10	11	12
V-L Mole Fraction												
Ar	0.0000	0.0000	0.0094	0.0031	0.0000	0.0000	0.0002	0.0094	0.0100	0.0106	0.0002	0.0000
CH_4	0.9310	0.0000	0.0000	0.0000	0.0000	0.1710	0.0000	0.0000	0.0000	0.0000	0.0000	0.0000
CO	0.0000	0.0000	0.0000	0.0000	0.0428	0.0349	0.0000	0.0000	0.0000	0.0000	0.0000	0.0000
CO_2	0.0100	0.0000	0.0003	0.0000	0.2973	0.2445	0.3366	0.0003	0.0003	0.0003	0.3366	1.0000
H_2	0.0000	0.0000	0.0000	0.0000	0.0900	0.0735	0.0000	0.0000	0.0000	0.0000	0.0000	0.0000
H_2O	0.0000	0.0000	0.0104	0.0000	0.5647	0.4610	0.6480	0.0104	0.0110	0.0118	0.6480	0.0000
N_2	0.0160	0.0000	0.7722	0.0019	0.0052	0.0072	0.0053	0.7722	0.8196	0.8731	0.0053	0.0000
C_2H_6	0.0320	0.0000	0.0000	0.0000	0.0000	0.0059	0.0000	0.0000	0.0000	0.0000	0.0000	0.0000
C_3H_8	0.0070	0.0000	0.0000	0.0000	0.0000	0.0013	0.0000	0.0000	0.0000	0.0000	0.0000	0.0000
C_4H_{10}	0.0040	0.0000	0.0000	0.0000	0.0000	0.0007	0.0000	0.0000	0.0000	0.0000	0.0000	0.0000
O_2	0.0000	0.0000	0.2077	0.9950	0.0000	0.0000	0.0098	0.2077	0.1591	0.1041	0.0098	0.0000
Total	1.0000	0.0000	1.0000	1.0000	1.0000	1.0000	1.0000	1.0000	1.0000	1.0000	1.0000	1.0000
V-L Flowrate (kg_{mol}/hr)	3,370	0	3,915	792	14,978	18,348	10,431	53,399	100,625	47,227	10,431	3,441
V-L Flowrate (kg/hr)	58,389	0	112,950	25,354	371,187	429,576	281,227	1,540,794	2,884,043	1,343,279	281,227	151,434
Solids Flowrate (kg/hr)	0	0	0	0	0	0	0	0	0	0	0	0
Temperature (°C)	15	---	15	27	759	649	1,324	15	650	132	1,324	24
Pressure (MPa, abs)	0.14	---	0.10	0.16	0.11	0.11	0.10	0.10	0.11	0.10	0.10	15.27
Enthalpy (kJ/kg)[A]	31.11	---	31.06	23.95	2,227.66	2,031.30	3,249.89	31.06	710.03	154.15	3,249.26	-241.59
Density (kg/m^3)	1.0	---	1.2	2.0	0.3	0.3	0.2	1.2	0.4	0.9	0.2	737.8
V-L Molecular Weight	17.328	---	28.854	32.016	24.782	23.413	26.961	28.854	28.661	28.443	26.961	44.010
V-L Flowrate (lb_{mol}/hr)	7,429	0	8,630	1,746	33,020	40,449	22,996	117,725	221,840	104,117	22,996	7,586
V-L Flowrate (lb/hr)	128,725	0	249,012	55,895	818,328	947,053	619,999	3,396,870	6,358,226	2,961,424	619,999	333,856
Solids Flowrate (lb/hr)	0	0	0	0	0	0	0	0	0	0	0	0
Temperature (°F)	59	---	59	80	1,398	1,200	2,415	59	1,202	270	2,414	75
Pressure (psia)	20.0	---	14.7	23.0	16.2	16.2	14.8	14.7	15.8	14.7	14.8	2,215.0
Enthalpy (Btu/lb)[A]	13.4	---	13.4	10.3	957.7	873.3	1,397.2	13.4	305.3	66.3	1,396.9	-103.9
Density (lb/ft^3)	0.062	---	0.076	0.127	0.020	0.021	0.013	0.076	0.025	0.053	0.013	46.061

A - Reference conditions are 32.02 F & 0.089 PSIA

Exhibit 5-4 Process flow diagram of the IR-NGFC power island

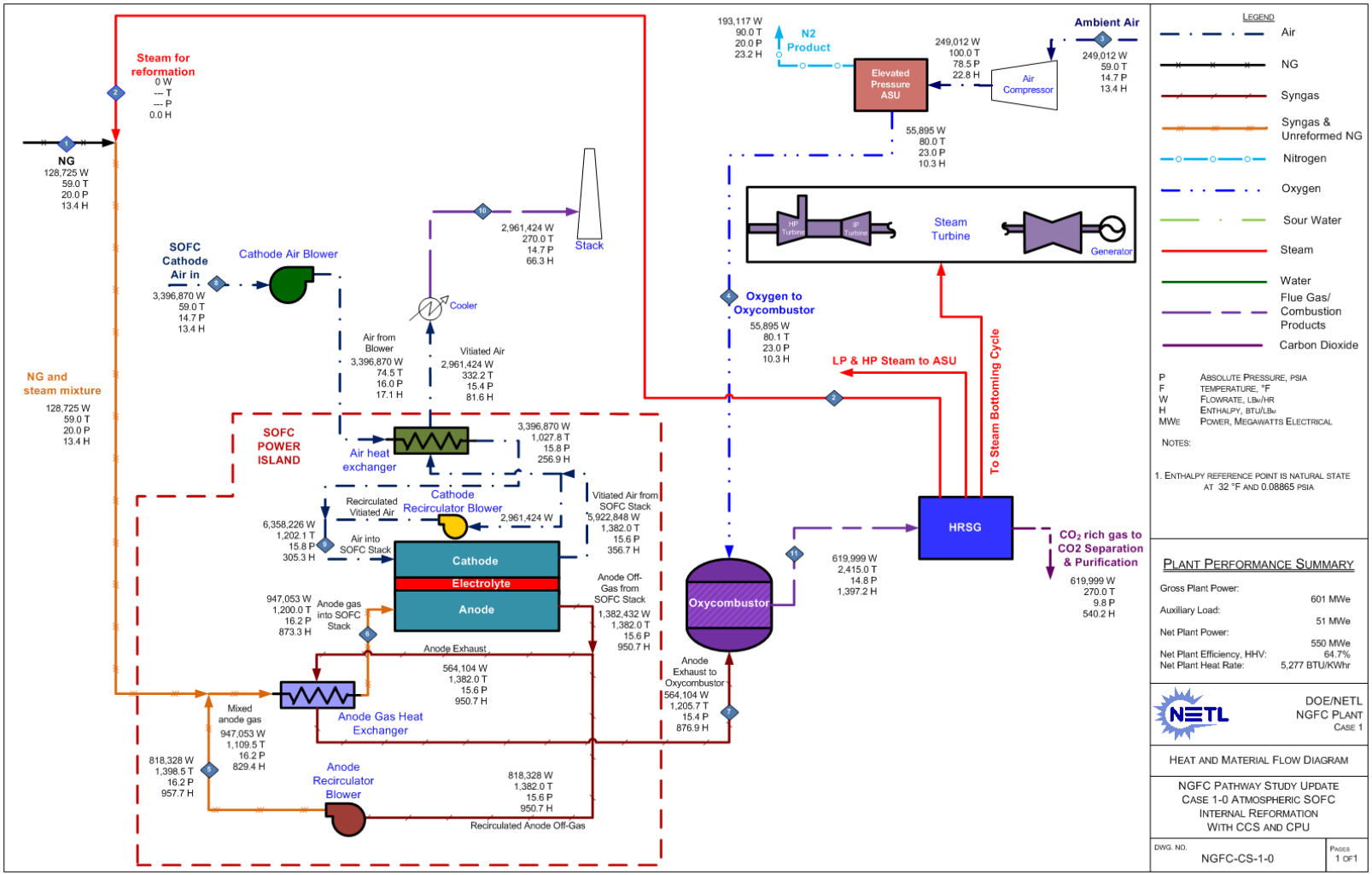

Source: NETL

Exhibit 5-5 Process flow diagram of the IR-NGFC CO_2 purification unit

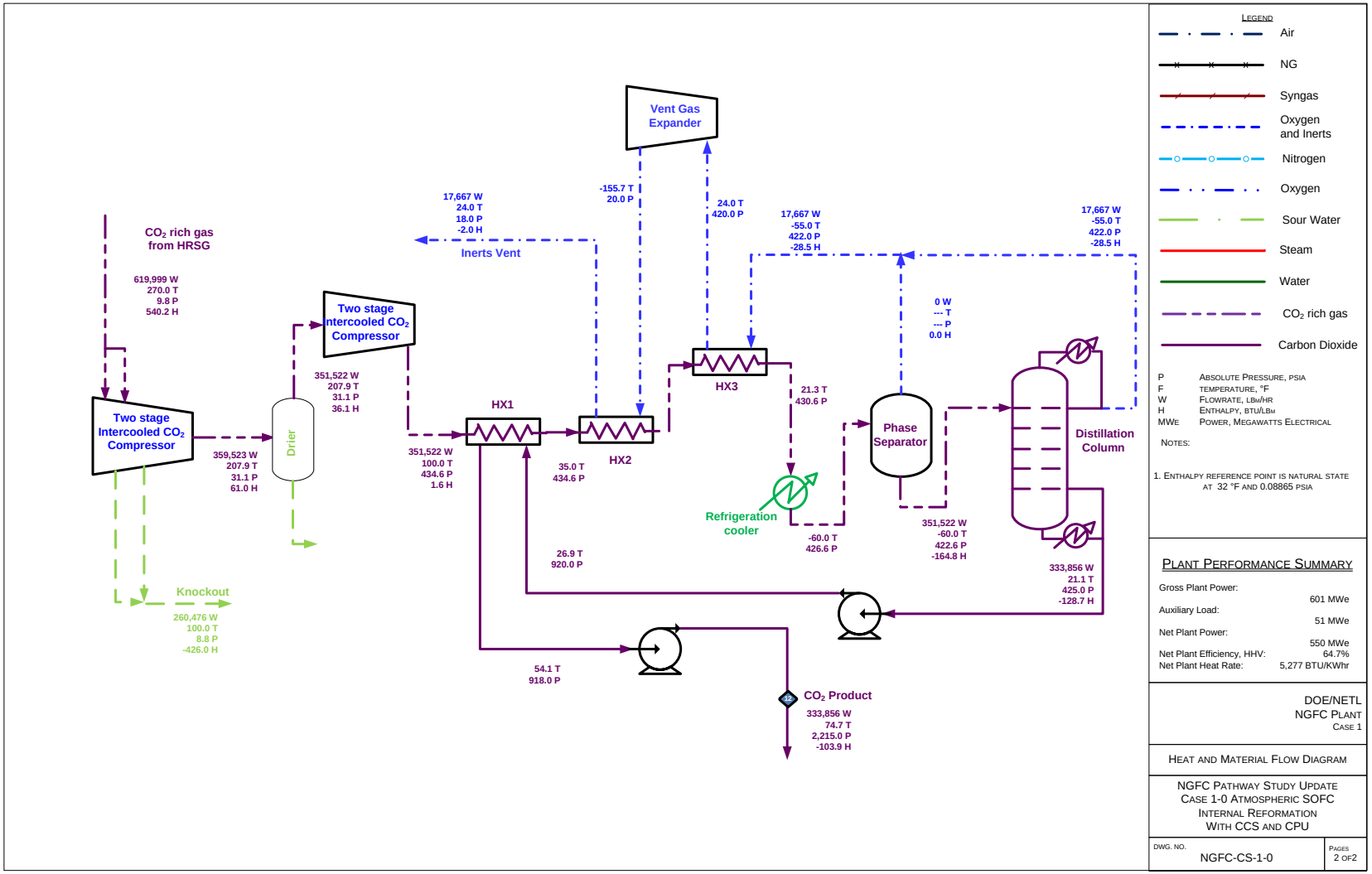

Source: NETL

Exhibit 5-6 IR-NGFC material and energy balance tables

Carbon balance

Carbon In		Carbon Out	
kg/hr(lb/hr)		kg/hr(lb/hr)	
NG	42,173 (92,977)	Stack Gas	192 (424)
Air (CO2)	207 (455)	CO2 Product	41,329 (91,114)
		N2 Product	14 (31)
		Convergence Tolerance	1 (1)
Total	42,380 (93,432)	Total	42,380 (93,432)

Sulfur balance

Sulfur In		Sulfur Out	
kg/hr(lb/hr)		kg/hr(lb/hr)	
NGIN	0 (0)	Elemental Sulfur	0 (0)
		Polishing Sorbent	0 (0)
		Convergence Tolerance	0 (0)
Total	0 (0)	Total	0 (0)

Energy Balance

	HHV	Sensible + Latent	Power	Total
Heat In GJ/hr (MMBtu/hr)				
NG	3,062 (2,903)	2.0 (1.9)		3,064 (2,905)
ASU Air		3.5 (3.3)		4 (3)
Fuel cell Air		47.9 (45.4)		48 (45)
Raw Water Makeup		15.9 (15.1)		16 (15)
Auxiliary Power			184 (174)	184 (174)
TOTAL	**3,062 (2,903)**	**69.4 (65.7)**	**184 (174)**	**3,316 (3,143)**
Heat Out GJ/hr (MMBtu/hr)				
CO2		-36.6 (-34.7)		-37 (-35)
Cooling Tower Blowdown		10.3 (9.8)		10 (10)
Stack Flue Gas		207.1 (196.3)		207 (196)
Nitrogen vent		4.7 (4.5)		5 (4)
Condenser		371 (352)		371 (352)
Non-Condenser Cooling Tower Loads*		435 (412)		435 (412)
Process Losses**		160 (152)		160 (152)
Power			2,164 (2,051)	2,164 (2,051)
TOTAL	**0 (0)**	**1,152 (1,091)**	**2,164 (2,051)**	**3,316 (3,143)**

Water balance

Water Use	Water Demand	Internal Recycle	Raw Water Withdrawal	Process Water Discharge	Raw Water Consumption
	m3/min (gpm)	m3/min (gpm)	m3/min (gpm)	m3/min (gpm)	m3/min (gpm)
Condenser Makeup	**0.0 (11)**	**0.0 (0)**	**0.0 (11)**	**0.0 (0)**	**0.0 (11)**
Reformer Steam	0.0 (0)	0.0 (0)	0.0 (0)		
BFW Makeup	0.0 (11)	0.0 (0)	0.0 (11)		
Cooling Tower	**6.2 (1,630)**	**1.97 (521)**	**4.2 (1,109)**	**1.4 (367)**	**2.8 (743)**
CO2 Dehydration	0.0 (0)	1.97 (521)	-1.97 (-521)		
Total	**6.2 (1,641)**	**1.97 (521)**	**4.2 (1,120)**	**1.4 (367)**	**2.9 (754)**

Emissions

	kg/GJ (lb/10^6Btu)	Tonne/year (tons/year)	kg/MWh (lb/MWh)
SO2	0 (0)	0 (0)	0 (0)
NOx	0 (0)	0 (0)	0 (0)
Particulate	0 (0)	0 (0)	0 (0)
Hg	0 (0)	0 (0)	0 (0)
CO2	1146 (2666)	24,585 (27,100)	6 (13)

* Includes ASU compressor intercoolers & CO_2 compressor intercoolers

** Includes accounting of losses such as inverter, transformer, generator, and motor losses

6 System Costs

The capital costs for the SOFC power island of the IR-NGFC system with CPU (Exhibit 5-1) are itemized in Exhibit 6-1. The total plant cost (TPC), shown in Exhibit 6-2, is $1129/kWe (in 2011 dollars). It is evident from the distribution of the capital cost shown in Exhibit 6-3 that the SOFC power island accounts for nearly half of the system cost. The capital costs for the steam cycle, the CPU, and the ASU add up to 30 percent of the system cost at approximately ten percent apiece. Exhibit 6-4Exhibit 6-4 lists the operating and maintenance labor costs while the variable and fuel costs are listed in Exhibit 6-5. A capacity factor of 85 percent as in the previous NGFC study (1) along with the 2011 natural gas price of $6.13/MMBtu have been assumed in these calculations. The corresponding cost tables for the NGFC system without a CPU are listed in Appendix A for the sake of reference.

The first year COE (excluding T&S) in 2011 dollars for the IR-NGFC unit with the CPU is calculated to be $68.8/MWh, as listed in Exhibit 6-6 based on a capital charge factor of 12.4 percent (five-year high-risk financial assumption). The addition of the CPU results in ~2 percent increase in the COE as evident from a comparison with the corresponding costs for an IR-NGFC system without the CPU, which is also shown in the same exhibit. The COE with T&S charges is higher by ~$3.0/MWh as shown.

Unless explicitly stated the term COE refers to the COE value without T&S in the ensuing discussions. The COE results for the IR-NGFC system is compared in Exhibit 6-7 with the corresponding results from the previous study (1) along with a listing of the assumptions for key parameters. In consistence with projected SOFC technology capabilities, a fixed current density of 400 mA/cm^2 was assumed in the present calculations in contrast to the fixed power density (400 mW/cm^2) assumption used in the previous study. (1)

It can be seen from Exhibit 6-8 that the IR-NGFC system with the CPU results in ~ 19 percent reduction in COE when compared with the reference natural gas combined cycle (NGCC) system with CCS ($85/MWh excluding T&S) (3) and it is lower by ~ 48 percent when compared with the baseline IGCC system with carbon capture ($133/MWh without T&S). The cost of captured CO_2 calculated using the COE of the reference NGCC system without capture ($57.2/MWh) (3) is also presented in Exhibit 6-8.

Exhibit 6-9 shows the sensitivity of the COE of the IR-NGFC system to the capital charge factor. The COE decreases by about 5 percent with alternate low risk assumptions.

Exhibit 6-1 SOFC power island capital costs

Cost Component	Cost (S1000)	Specific Cost ($/kWe AC)
	2011$	
SOFC POWER ISLAND		
SOFC Module		
SOFC Stack	123,763	225
Enclosure	16,502	30
Transport and Placement	7,921	14
Site Foundations	24,423	44
Inverter	37,513	68
Pre-Reformer	15,701	29
Total SOFC Module	**225,822**	**411**
Total SOFC Module with 10 % Extra Installed Area	**248,404**	**452**
SOFC BOP		
Desulfurization System	1,098	2
Cathode Air Blower	1,588	3
Cathode Gas Recycle Blower	3,386	6
Cathode Heat Exchanger	36,663	67
Anode Recycle Blower	570	1
Anode Heat Exchanger	1,177	2
Oxy-Combustor	8,786	16
Total SOFC BOP	**53,268**	**97**
TOTAL SOFC POWER ISLAND	**301,672**	**548**

Exhibit 6-2 IR-NGFC with CPU - capital costs of system components, TPC, TOC, and TASC

Cost Component	Cost (S1000)	Specific Cost ($/kWe AC)
	2011$	
SOFC POWER ISLAND	**301,672**	**548**
ASU	**49,592**	**90**
STEAM CYCLE		
HRSG, Ducting, and Stack	20,264	37
Steam Power System	27,457	50
Feedwater and Misc BOP systems	11,443	21
TOTAL STEAM CYCLE	**59,165**	**108**
CO_2 COMPRESSION & PURIFICATION		
CO_2 Drying and Compression	-	-
CO_2 Purification	55,233	100
TOTAL CO_2 COMPRESSION & PURIFICATION	**55,233**	**100**
COOLING WATER SYSTEM	**16,333**	**30**
ACCESSORY ELECTRIC PLANT	**42,590**	**77**
INSTRUMENTATION & CONTROL	**32,985**	**60**
IMPROVEMENTS TO SITE	**32,783**	**60**
BUILDING & STRUCTURES	**30,767**	**56**
TOTAL PLANT COST (TPC)	**621,120**	**1129**
OWNER'S COSTS		
Preproduction Costs		
6 Months All Labor	4,971	
1 Month Maintenance Materials	993	
1 Month Non-fuel Consumables	254	
2% of TPC	12,422	
Total Preproduction Costs	**18,640**	
Inventory Capital		
60 day supply of fuel and consumables at 100% CF	414	
0.5% of TPC (spare parts)	3,106	
Total Inventory Capital	**3,520**	
Initial Cost for Catalyst and Chemicals	**234**	
Land	**900**	
Other Owner's Costs	**93,168**	
Financing Costs	**16,770**	
TOTAL OWNER'S COSTS	**133,232**	
TOTAL OVERNIGHT COST (TOC)	**754,352**	**1371**
TASC Multiplier	1.14	
TOTAL AS-SPENT COST (TASC)	**859,962**	**1563**

Exhibit 6-3 Distribution of the IR-NGFC with CPU capital costs

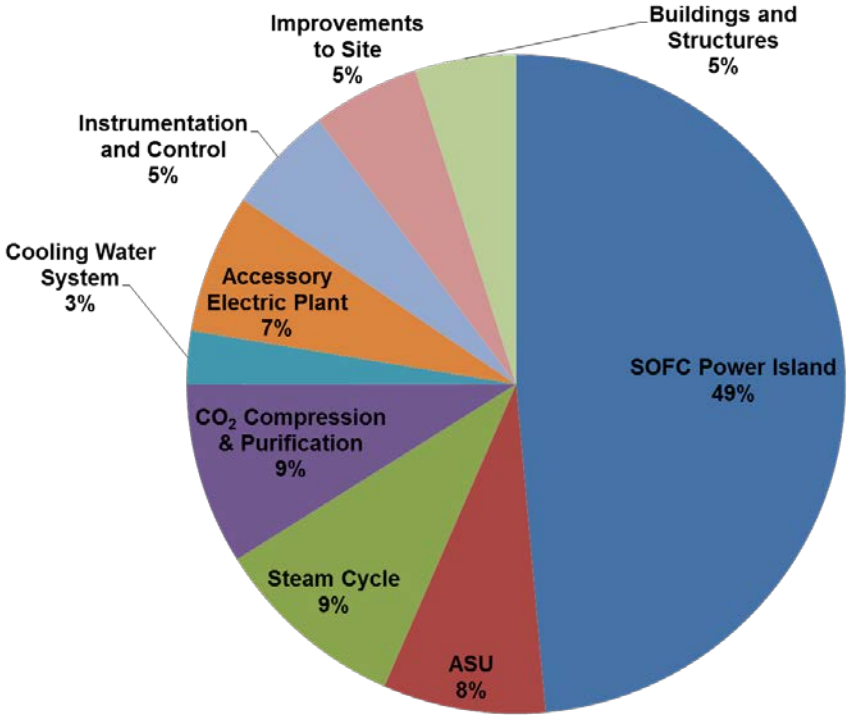

Source: NETL

Exhibit 6-4 IR-NGFC with CPU - fixed operating costs

Cost Component	Cost	Cost ($/MWh)
	2011$	
OPERATING & MAINTENANCE LABOR		
Operating Labor Rate (base)	39.70	
Operating Labor Burden		
Labor O-H Charge Rate		
Total Operators per shift		
Maintenance labor/Operating labor		
Maintenance materials/Maintenance labor		
Stack replacement O&M, $/hr per stack kW	18.33	
Annual Operating Labor Cost	2,712,622	
Maintenance Labor Cost	5,240,785	
Administrative & Support Labor	1,988,352	
Property Taxes and Insurance	12,254,452	
TOTAL FIXED OPERATING COSTS	**22,196,210**	**5.42**

Exhibit 6-5 IR-NGFC with CPU - variable operating costs

Cost Component	Cost	Cost ($/MWh)
	2011$	
VARIABLE OPERATING COSTS		
Maintenance Material Cost	10,125,196	
Stack replacement		
SOFC stack life (years)		
Discount rate for stack replacement (%)		
SOFC stack replacement cost, $/kW AC	$342	
SOFC Stack replacement O&M, $/yr per kW	$34	
Stack Replacement Cost	**20,627,574**	**3.53**
CONSUMABLES		
Water (/1000 gallons)		
Use (1000 gal/day)	922	
Price ($/1000 gal)	1.67	
Annual ($)	477,579	
Chemicals		
MU & WT Chem. (lbs)		
Use (lb/day)	4,073	
Price ($/lb)	0.27	
Annual ($)	341,219	
NG Desulfur TDA Adsorbent (lb)		
Initial Fill (lb)	39,053	
Use (lb/day)	951	
Price ($/lb)	6.0	
Initial Cost ($)	234,316	
Annual ($)	1,770,107	
TOTAL VARIABLE OPERATING COSTS		
Initial Fill ($)	234,316	
Annual ($)	**33,341,675**	**8.14**
Fuel Natural Gas (MMBtu)		
Price ($/MMBtu)	6.13	
Annual ($)	132,486,995	**32.35**

Exhibit 6-6 Cost of electricity for the IR-NGFC system with and without the CPU

Cost Of Electricity (2011$/MWh) with and without CPU		
	With CPU	**Without CPU**
Variable COE	40.5	39.8
Fuel	32.3	31.9
Variable O&M	8.1	7.9
Fixed O&M	5.4	5.3
Capital Charges	22.9	21.9
Total First Year COE (excl. T&S)	68.8	67.0
CO_2 T&S	3.0	3.1
Total First Year COE (with T&S)	71.8	70.1

Exhibit 6-7 Comparison of present COE results with previous NGFC study (1)

Parameter		Previous Study (1) Case 3-1	Present Study Updated Case 3-1	
		2007$	2007$	2011$
NG Reforming		Internal		
Cell Overpotential	mV	70		
Fuel Utilization	%	90		
Current Density	mA/cm^2	Varied to fix Power density = 400 mW/cm^2	400	
O_2 purity in CO_2	ppmv	<100 (No CPU)	<100 (No CPU)	10 (With CPU)
Degradation	%/1000 h	0.2 (17-20% spare/11-13 yr replacement)	0.2 (10% spare/~ 7 yr replacement)	0.2 (10% spare/~ 7 yr replacement)
COE	($/MWh)	61.2	62.4	68.8

Exhibit 6-8 Comparison of the IR-NGFC system with CPU with NETL metrics

Metric		Reference		Calculation	Present NGFC system
		System	COE ($/MWh)		
Reduction in COE	%	NGCC with CCS	85.0[1]	$\frac{COE_{NGFC} - COE_{NGCC\ with\ CCS}}{COE_{NGCC\ with\ CCS}}$	19.0
		IGCC with CCS	133	$\frac{COE_{NGFC} - COE_{IGCC\ with\ CCS}}{COE_{IGCC\ with\ CCS}}$	48.3
Cost of CO_2 Captured	$/tonne CO_2	NGCC without Capture	57.2	$\frac{COE_{NGFC} - COE_{NGGC\ with\ Capture}}{CO_2\ captured\ (tonne/MWh)}$	42.1

Exhibit 6-9 Sensitivity of IR-NGFC with CPU COE to capital charge factor

	Risk	Capital Charge factor (%)	COE (2011 $/MWh)
5 yr	Low	11.6	67.3
	High	12.4	68.8
3 yr	Low	10.5	65.2
	High	11.1	66.4

[1] Corresponds to the COE from the NGCC study (3) without the CO_2 T&S charges, which is also not included in the COE of the NGFC system shown in the exhibit.

7 Sensitivity of COE to Stack Cost, Extra Area, and Degradation

Sensitivity of the IR-NGFC with CPU system COE (excluding T&S) to extra area installed and the stack degradation rate is shown in Exhibit 7-1, assuming a stack lifetime that is an average of the values for the linear and first order stack degradation models. The costs of the reference NGCC system (3) and the baseline IGCC system, both with CCS, are shown. It is clear that a stack degradation rate of 0.5 percent per 1000 hours or lower is necessary to be cost competitive with the reference NGCC system. The requirement on the stack degradation rate is less stringent, 1.0 percent per 1000 hours or lower, in order to achieve a 20 percent reduction in COE relative to an IGCC plant with CCS. There appears to be little advantage in installing more than 10 percent additional area at any degradation rate.

The cost-competitiveness with the NGCC system can be met at higher degradation rates, as shown in Exhibit 7-2, if the stack cost is reduced from the $225/kW used in the present calculations. At the degradation rate of 0.2 percent per 1000 hours, the IR-NGFC system remains attractive, relative to the NGCC and IGCC systems even for stack costs higher than $225/kW. For the cost of captured CO_2 metric, a stack degradation rate of 0.5 percent per 1000 hours represents an upper limit beyond which the IR-NGFC system becomes less attractive when compared to the reference NGCC system with CCS (3) as depicted in Exhibit 7-3. These results underline the importance of reducing the stack degradation rates as part of the SOFC technology development roadmap set by NETL

Exhibit 7-1 Sensitivity of IR-NGFC system COE with CPU to extra area and stack degradation rate[1]

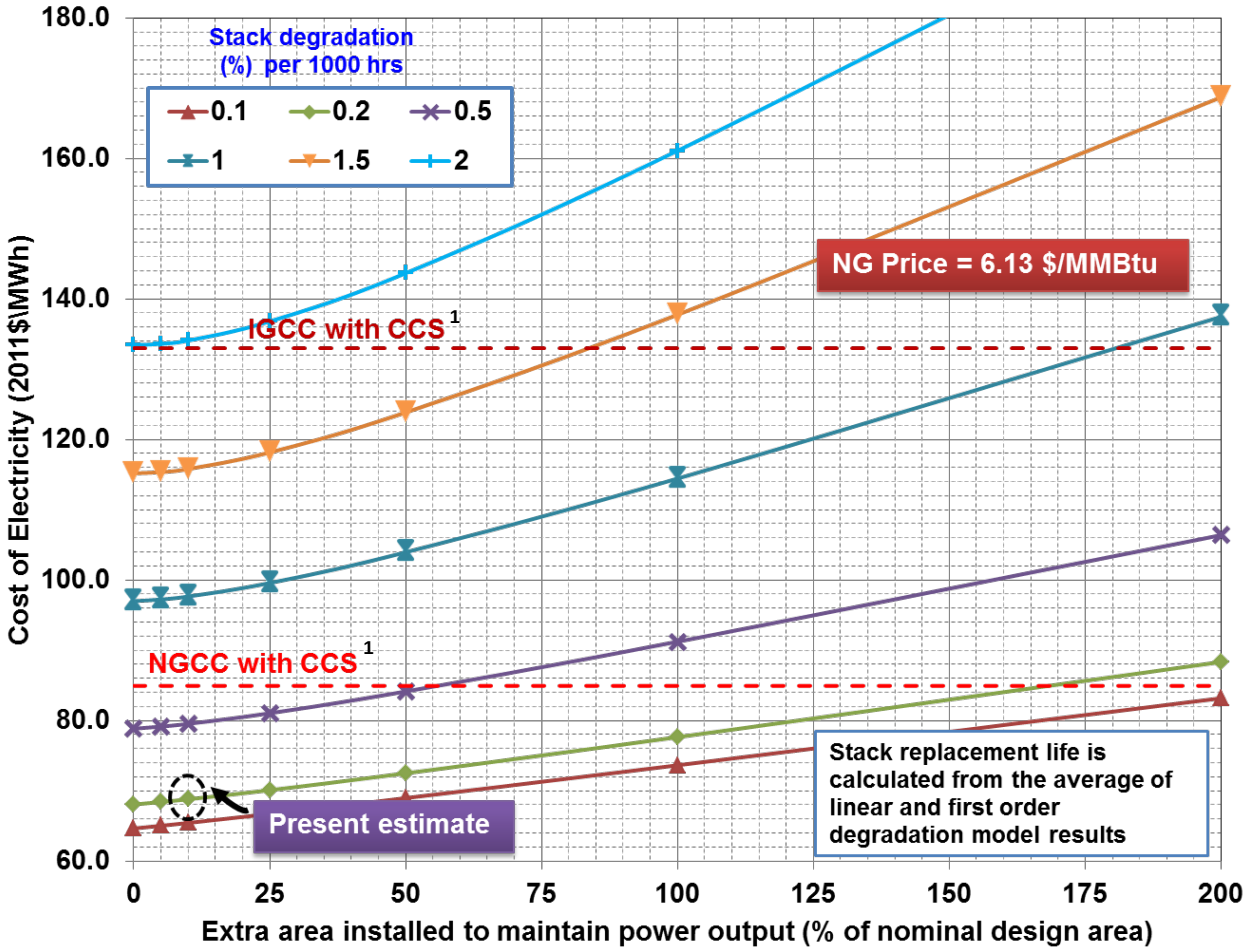

Source: NETL

[1] Costs of electricity (without T&S) for the reference IGCC and the reference NGCC systems with CCS are also shown (2), (3).

Exhibit 7-2 Sensitivity of IR-NGFC system COE with CPU to stack cost and stack degradation rate[1]

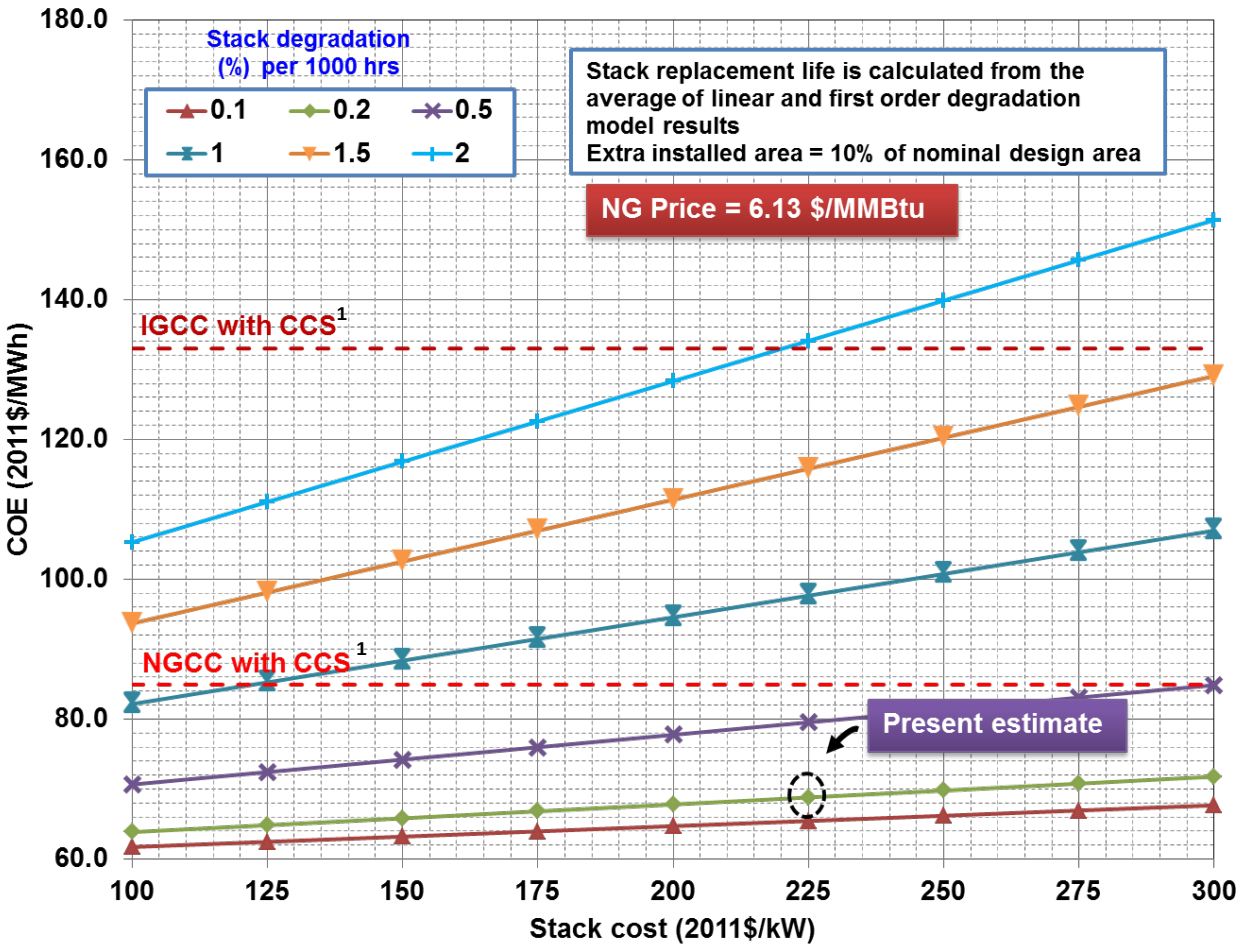

Source: NETL

[1] Costs of electricity (without T&S) for the reference IGCC and the reference NGCC systems with CCS are also shown (2), (3).

Exhibit 7-3 IR-NGFC system with CPU - cost of captured CO_2 variation with stack cost and degradation rate [1]

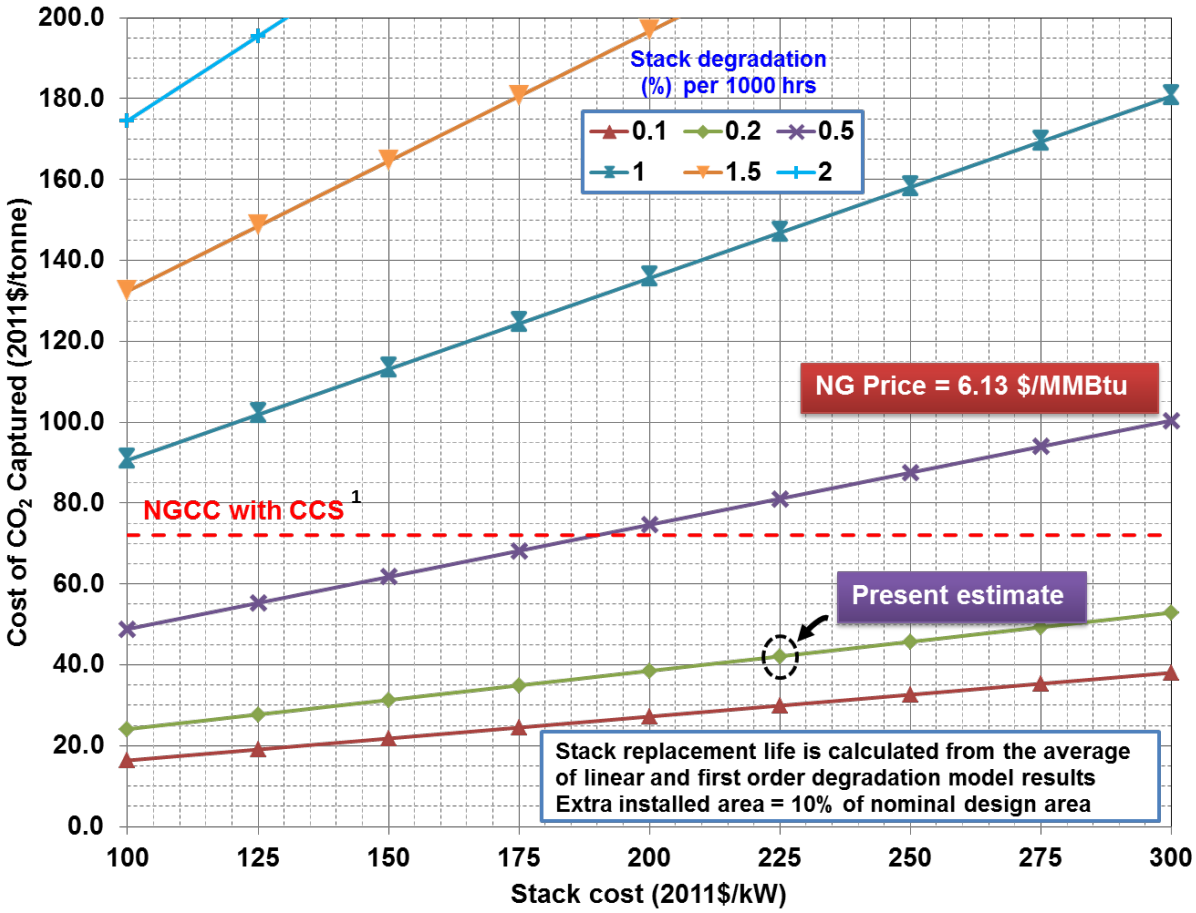

Source: NETL

[1] Cost of CO_2 captured for the reference NGCC system is also shown (3).

8 Conclusion

The performance and cost of an NGFC system with complete IR with carbon capture and sequestration (CCS) is presented in this report. The system also includes a carbon dioxide (CO_2) purification unit (CPU) to meet enhanced oil recovery (EOR) requirements. The SOFC power island costs were estimated based on the NETL SOFC stack goal of $225/kWe in 2011 dollars.

The analyzed IR-NGFC process with the CPU resulted in net plant efficiency of ~64.7 percent (HHV), and is ~1 percentage point lower than the performance predicted by the Aspen model of the process without the CPU. The carbon capture rate of the system was estimated to be 98 percent.

The TPC was calculated to be $1129/kWe in 2011 dollars. The first year COE (excluding T&S) in 2011 dollars for the IR-NGFC unit with the CPU was calculated to be $68.8/MWh based on a 85 percent capacity factor at a capital charge factor of 12.4 percent (five-year high-risk financial assumption) and a natural gas price of $6.13/MMBtu. Inclusion of the CO_2 T&S charges increases the COE by ~$3.0/MWh.

The elimination of the CPU was seen to result in ~2 percent decrease in the COE (excluding T&S) while low risk assumptions decreased it by about 5 percent. The COE (excluding T&S) of the IR-NGFC system with the CPU is ~19 and 48 percent lower than the corresponding COEs of the reference NGCC system with carbon capture and the baseline IGCC system with carbon capture.

At the stack cost of $225/kWe, a stack degradation rate of 0.5 percent per 1000 hours or lower was required to be cost competitive with the reference NGCC system. There appears to be no significant advantage in installing more than 10 percent additional area at any degradation rate. The cost-competitiveness with the NGCC system can be met at higher degradation rates if the stack cost is reduced from the $225/kWe value used in present calculations. At the degradation rate of 0.2 percent per 1000 hours, the IR-NGFC system remains attractive relative to the NGCC and IGCC systems (both with CCS) even for stack costs higher than $225/kWe. A stack degradation rate of 0.5 percent per 1000 hours represents an upper limit beyond which the IR-NGFC system becomes less attractive relative to an NGCC system with CCS for the cost of CO_2 captured metric. These results underline the importance of reducing the stack degradation rates as part of the SOFC technology development roadmap set by NETL.

9 References

1. **NETL - National Energy Technology Laboratory.** *Analysis of Natural Gas Fuel Cell Plant Configurations - Updated.* November 16, 2012. DOE/NETL-2013/1593.

2. —. *Updated Costs (June 2011 Basis) for Selected Bituminous Baseline Cases.* 2012. DOE/NETL-341/082312.

3. **NETL - National Energy Technology Laboratory.** *Cost and Performance of Retrofitting NGCC Units for Carbon Capture* . 2013. DOE/NETL - 341/081213.

4. **NETL - National Energy Technology Laboratory.** *QGESS: CO2 Impurity Design Parameter.* March 2012,. NETL/DOE -341/011212.

5. **Vora, S.D.,.** SECA Program at Siemens Westinghouse. s.l. : Siemens Westinghouse, 2005.

6. **Blum, L., Meulenberg, W.A., Nabielek, H., Steinbcrgcr-Wilckens, R.** Worldwide SOFC Technology Overview and Benchmark. *Advances in Solid Oxide Fuel Cells.* s.l. : The American Ceramic Society, 2005, Vol. 26.

7. **Thijssen, J.,.** *Natural Gas-Fueled Distributed Generation Solid Oxide Fuel Cell Systems: Projection of Performance Cost and Cost of Electricity.* s.l. : J.Thijssen, LLC, 2009. R10204 2009/1.

8. **NETL - National Energy Technology Laboratory.** *QGESS: Carbon Dioxide Transport and Storage Costs in NETL Studies.* s.l. : NETL, September 30, 2013. DOE/NETL - 2013/1614.

Appendix A Updated IR-NGFC System without CPU

Exhibit A-1 IR-NGFC system without CPU - block flow diagram

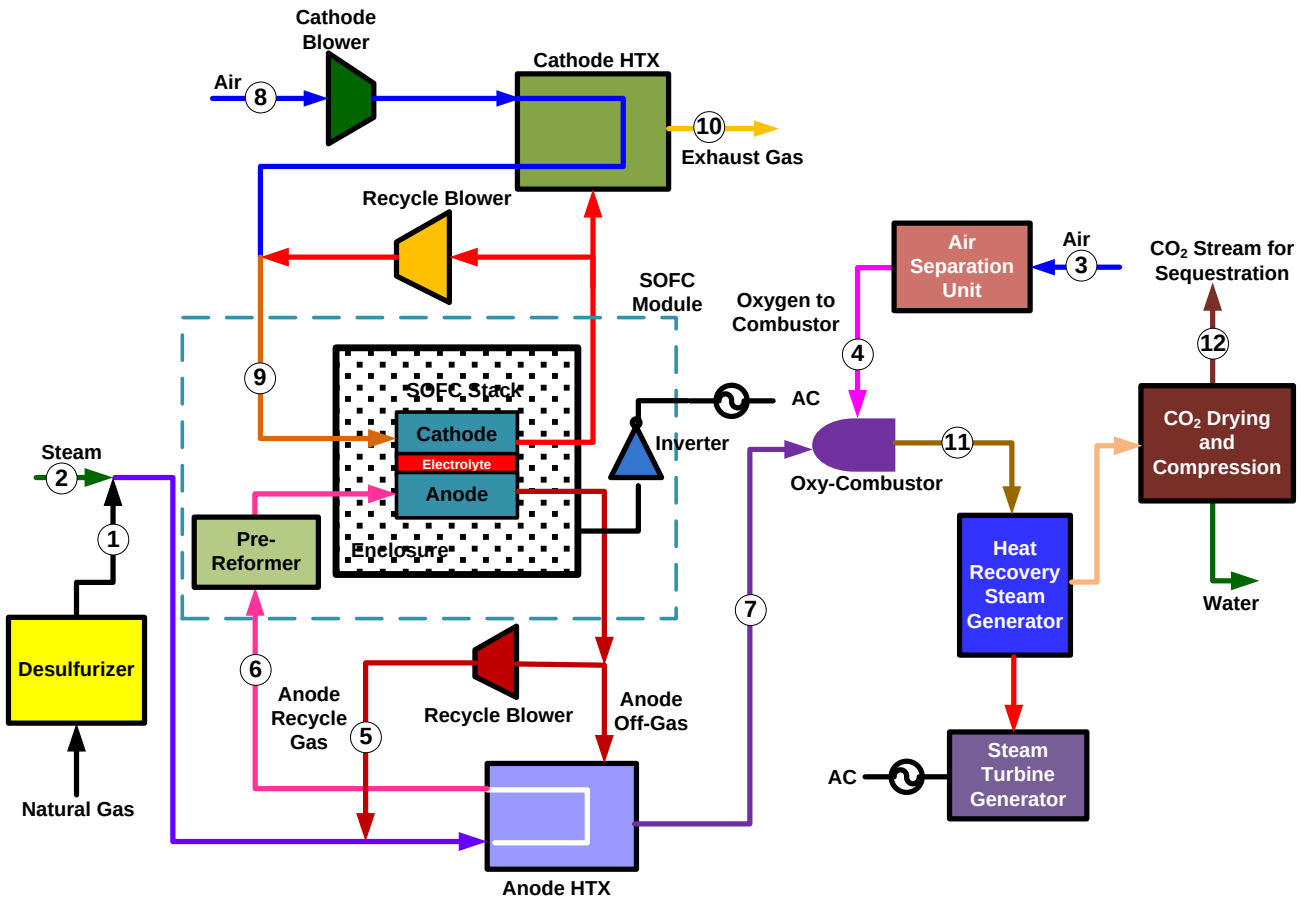

Source: NETL

Exhibit A-2 IR-NGFC system without CPU - stream table

	1	2	3	4	5	6	7	8	9	10	11	12
V-L Mole Fraction												
Ar	0.0000	0.0000	0.0094	0.0031	0.0000	0.0000	0.0002	0.0094	0.0100	0.0106	0.0002	0.0007
CH_4	0.9310	0.0000	0.0000	0.0000	0.0000	0.1710	0.0000	0.0000	0.0000	0.0000	0.0000	0.0000
CO	0.0000	0.0000	0.0000	0.0000	0.0428	0.0349	0.0000	0.0000	0.0000	0.0000	0.0000	0.0000
CO_2	0.0100	0.0000	0.0003	0.0000	0.2973	0.2445	0.3366	0.0003	0.0003	0.0003	0.3366	0.9564
H_2	0.0000	0.0000	0.0000	0.0000	0.0900	0.0735	0.0000	0.0000	0.0000	0.0000	0.0000	0.0000
H_2O	0.0000	0.0000	0.0104	0.0000	0.5647	0.4610	0.6480	0.0104	0.0110	0.0118	0.6480	0.0000
N_2	0.0160	0.0000	0.7722	0.0019	0.0052	0.0072	0.0053	0.7722	0.8196	0.8731	0.0053	0.0151
C_2H_6	0.0320	0.0000	0.0000	0.0000	0.0000	0.0059	0.0000	0.0000	0.0000	0.0000	0.0000	0.0000
C_3H_8	0.0070	0.0000	0.0000	0.0000	0.0000	0.0013	0.0000	0.0000	0.0000	0.0000	0.0000	0.0000
C_4H_{10}	0.0040	0.0000	0.0000	0.0000	0.0000	0.0007	0.0000	0.0000	0.0000	0.0000	0.0000	0.0000
O_2	0.0000	0.0000	0.2077	0.9950	0.0000	0.0000	0.0098	0.2077	0.1591	0.1041	0.0098	0.0278
Total	1.0000	0.0000	1.0000	1.0000	1.0000	1.0000	1.0000	1.0000	1.0000	1.0000	1.0000	1.0000
V-L Flowrate (kg_{mol}/hr)	3,322	0	3,859	781	14,766	18,088	10,283	52,628	99,172	46,544	10,283	3,619
V-L Flowrate (kg/hr)	57,563	0	111,352	24,995	365,946	423,509	277,250	1,518,539	2,842,386	1,323,847	277,250	157,193
Solids Flowrate (kg/hr)	0	0	0	0	0	0	0	0	0	0	0	0
Temperature (°C)	15	---	15	27	759	649	1,324	15	650	132	1,324	114
Pressure (MPa, abs)	0.14	---	0.10	0.16	0.11	0.11	0.10	0.10	0.11	0.10	0.10	15.27
Enthalpy (kJ/kg)[A]	31.11	---	31.06	23.95	2,227.66	2,031.34	3,249.88	31.06	710.03	154.15	3,249.25	3.53
Density (kg/m^3)	1.0	---	1.2	2.0	0.3	0.3	0.2	1.2	0.4	0.9	0.2	283.4
V-L Molecular Weight	17.328	---	28.854	32.016	24.782	23.413	26.961	28.854	28.661	28.443	26.961	43.431
V-L Flowrate (lb_{mol}/hr)	7,324	0	8,508	1,721	32,554	39,878	22,671	116,025	218,636	102,611	22,671	7,979
V-L Flowrate (lb/hr)	126,905	0	245,488	55,104	806,773	933,678	611,232	3,347,805	6,266,388	2,918,582	611,232	346,551
Solids Flowrate (lb/hr)	0	0	0	0	0	0	0	0	0	0	0	0
Temperature (°F)	59	---	59	80	1,398	1,200	2,415	59	1,202	270	2,414	237
Pressure (psia)	20.0	---	14.7	23.0	16.2	16.2	14.8	14.7	15.8	14.7	14.8	2,215.0
Enthalpy (Btu/lb)[A]	13.4	---	13.4	10.3	957.7	873.3	1,397.2	13.4	305.3	66.3	1,396.9	1.5
Density (lb/ft^3)	0.062	---	0.076	0.127	0.020	0.021	0.013	0.076	0.025	0.053	0.013	17.693

A - Reference conditions are 32.02 F & 0.089 PSIA

Exhibit A-3 IR-NGFC system without CPU - process flow diagram

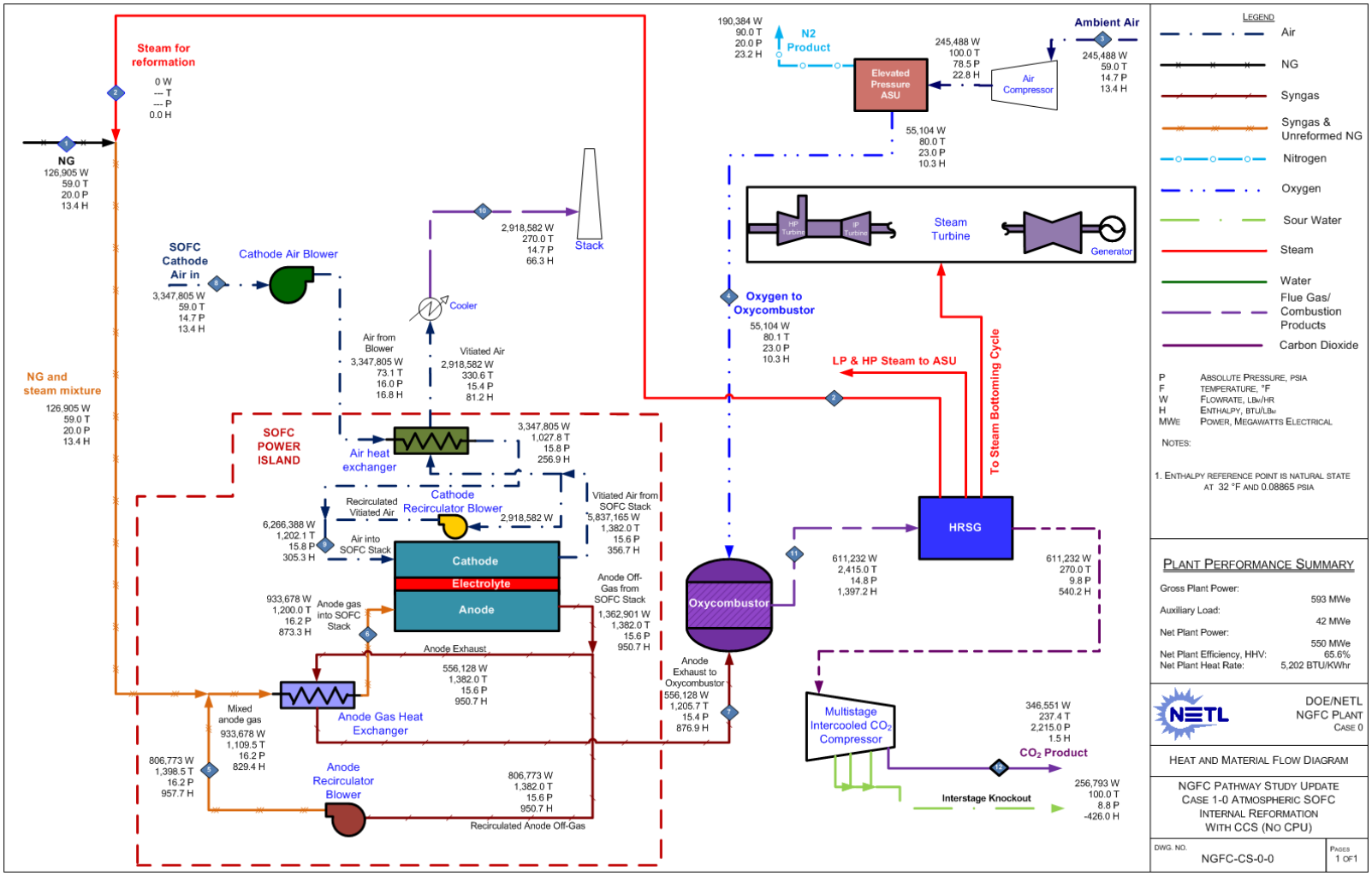

Source: NETL

Exhibit A-4 IR-NGFC system without CPU - mass and energy balances

Carbon balance

Carbon In		Carbon Out	
kg/hr(lb/hr)		kg/hr(lb/hr)	
NG	41,577 (91,662)	Stack Gas	190 (418)
Air (CO2)	204 (449)	CO2 Product	41,577 (91,661)
		N2 Product	14 (31)
		Convergence Tolerance	1 (1)
Total	41,781 (92,111)	Total	41,781 (92,111)

Sulfur balance

Sulfur In		Sulfur Out	
kg/hr(lb/hr)		kg/hr(lb/hr)	
NGIN	0 (0)	Elemental Sulfur	0 (0)
		Polishing Sorbent	0 (0)
		Convergence Tolerance	0 (0)
Total	0 (0)	Total	0 (0)

Energy Balance

	HHV	Sensible + Latent	Power	Total
Heat In GJ/hr (MMBtu/hr)				
NG	3,019 (2,862)	2.0 (1.9)		3,021 (2,863)
ASU Air		3.5 (3.3)		3 (3)
Fuel cell Air		47.2 (44.7)		47 (45)
Raw Water Makeup		16.2 (15.3)		16 (15)
Auxiliary Power			153 (145)	153 (145)
TOTAL	**3,019 (2,862)**	**68.8 (65.2)**	**153 (145)**	**3,241 (3,072)**
Heat Out GJ/hr (MMBtu/hr)				
CO2		0.6 (0.5)		1 (1)
Cooling Tower Blowdown		10.4 (9.8)		10 (10)
Stack Flue Gas		204.1 (193.4)		204 (193)
Nitrogen vent		4.7 (4.4)		5 (4)
Condenser		365 (346)		365 (346)
Non-Condenser Cooling Tower Loads*		445 (422)		445 (422)
Process Losses*		78 (74)		78 (74)
Power			2,133 (2,022)	2,133 (2,022)
TOTAL	**0 (0)**	**1,108 (1,050)**	**2,133 (2,022)**	**3,241 (3,072)**

Water balance

Water Use	Water Demand	Internal Recycle	Raw Water Withdrawal	Process Water Discharge	Raw Water Consumption
	m3/min (gpm)	m3/min (gpm)	m3/min (gpm)	m3/min (gpm)	m3/min (gpm)
Condenser Makeup	**0.0 (11)**	**0.0 (0)**	**0.0 (11)**	**0.0 (0)**	**0.0 (11)**
Reformer Steam	0.0 (0)	0.0 (0)	0.0 (0)		
BFW Makeup	0.0 (11)	0.0 (0)	0.0 (11)		
Cooling Tower	**6.2 (1,639)**	**1.94 (514)**	**4.3 (1,125)**	**1.4 (369)**	**2.9 (757)**
CO2 Dehydration	0.0 (0)	1.94 (514)	-1.94 (-514)		
Total	**6.2 (1,650)**	**1.94 (514)**	**4.3 (1,136)**	**1.4 (369)**	**2.9 (768)**

Emissions

	kg/GJ ($lb/10^6 Btu$)	Tonne/year (tons/year)	kg/MWh (lb/MWh)
SO2	0 (0)	0 (0)	0 (0)
NOx	0 (0)	0 (0)	0 (0)
Particulate	0 (0)	0 (0)	0 (0)
Hg	0 (0)	0 (0)	0 (0)
CO2	0 (0)	0 (0)	0 (0)

** Includes ASU compressor intercoolers & CO_2 compressor intercoolers*

*** Includes accounting of losses such as inverter, transformer, generator, and motor losses*

Exhibit A-5 IR-NGFC system without CPU - SOFC power island capital costs

Cost Component	Cost ($1000)	Specific Cost ($/kWe AC)
	2011$	
SOFC POWER ISLAND		
SOFC Module		
SOFC Stack	123,768	225
Enclosure	16,502	30
Transport and Placement	7,921	14
Site Foundations	24,424	44
Inverter	37,514	68
Pre-Reformer	15,701	29
Total SOFC Module	**225,830**	**411**
Total SOFC Module with 10 % Extra Installed Area	**248,413**	**452**
SOFC BOP		
Desulfurization System	1,085	2
Cathode Air Blower	1,568	3
Cathode Gas Recycle Blower	3,344	6
Cathode Heat Exchanger	36,133	66
Anode Recycle Blower	565	1
Anode Heat Exchanger	1,161	2
Oxy-Combustor	8,786	16
Total SOFC BOP	**52,641**	**96**
TOTAL SOFC POWER ISLAND	**301,054**	547

Exhibit A-6 IR-NGFC system without CPU - capital costs, TPC, TOC, and TASC

Cost Component	Cost ($1000)	Specific Cost ($/kWe AC)
	2011$	2011$
SOFC POWER ISLAND	**301,054**	547
ASU	**49,100**	**89**
STEAM CYCLE		
HRSG, Ducting, and Stack	20,009	36
Steam Power System	27,124	49
Feedwater and Misc BOP systems	11,590	21
TOTAL STEAM CYCLE	**58,723**	**107**
CO_2 COMPRESSION & PURIFICATION		
CO_2 Drying and Compression	34,156	62
CO_2 Purification	-	-
TOTAL CO_2 COMPRESSION & PURIFICATION	**34,156**	**62**
COOLING WATER SYSTEM	**16,394**	**30**
ACCESSORY ELECTRIC PLANT	**37,417**	**68**
INSTRUMENTATION & CONTROL	**32,985**	**60**
IMPROVEMENTS TO SITE	**32,784**	**60**
BUILDING & STRUCTURES	**30,768**	**56**
TOTAL PLANT COST (TPC)	**593,381**	**1079**
OWNER'S COSTS		
Preproduction Costs		
6 Months All Labor	4,971	
1 Month Maintenance Materials	993	
1 Month Non-fuel Consumables	253	
2% of TPC	11,868	
Total Preproduction Costs	**18,084**	
Inventory Capital		
60 day supply of fuel and consumables at 100% CF	410	
0.5% of TPC (spare parts)	2,967	
Total Inventory Capital	**3,377**	
Initial Cost for Catalyst and Chemicals	**231**	
Land	**900**	
Other Owner's Costs	**89,007**	
Financing Costs	**16,021**	
TOTAL OWNER"S COSTS	**127,621**	
TOTAL OVERNIGHT COST (TOC)	**721,001**	**1311**
TASC Multiplier	1.14	
TOTAL AS-SPENT COST (TASC)	**821,941**	**1494**

Exhibit A-7 IR-NGFC system without CPU - fixed and variable O&M costs

Cost Component	Cost	Cost ($/MWh)
	2011$	
OPERATING & MAINTENANCE LABOR		
Operating Labor Rate (base)	39.70	
Operating Labor Burden		
Labor O-H Charge Rate		
Total Operators per shift		
Maintenance labor/Operating labor		
Maintenance materials/Maintenance labor		
Stack replacement O&M, $/hr per stack kW	18.33	
Annual Operating Labor Cost	2,712,622	
Maintenance Labor Cost	5,240,785	
Administrative & Support Labor	1,988,352	
Property Taxes and Insurance	11,712,665	
TOTAL FIXED OPERATING COSTS	**21,654,424**	**5.29**
VARIABLE OPERATING COSTS		
Maintenance Material Cost	10,125,196	
Stack replacement		
SOFC stack life (years)		
Discount rate for stack replacement (%)		
SOFC stack replacement cost, $/kW AC	$342	
SOFC Stack replacement O&M, $/yr per kW	$34	
Stack Replacement Cost	**19,852,544**	**3.40**
CONSUMABLES		
Water (/1000 gallons)		
Use (1000 gal/day)	939	
Price ($/1000 gal)	1.67	
Annual ($)	486,373	
Chemicals		
MU & WT Chem. (lbs)		
Use (lb/day)	4,148	
Price ($/lb)	0.27	
Annual ($)	347,502	
NG Desulfur TDA Adsorbent (lb)		
Initial Fill (lb)	38,501	
Use (lb/day)	937	
Price ($/lb)	6.0	
Initial Cost ($)	231,003	
Annual ($)	1,745,080	
TOTAL VARIABLE OPERATING COSTS		
Initial Fill ($)	231,003	
Annual ($)	**32,556,695**	**7.95**
Fuel Natural Gas (MMBtu)		
Price ($/MMBtu)	6.13	
Annual ($)	130,613,806	**31.89**

Walter Shelton
walter.shelton@netl.doe.gov

Dale Keairns
dale.keairns@contr.netl.doe.gov

www.netl.doe.gov

Pittsburgh, PA • Morgantown, WV • Albany, OR • Sugar Land, TX • Anchorage, AK

(800) 553-7681