U.S. DEPARTMENT OF ENERGY | National Energy Technology Laboratory

OFFICE OF FOSSIL ENERGY

Cost and Performance Baseline for Fossil Energy Plants

Volume 4: Coal-to-Liquids via Fischer-Tropsch Synthesis

October 15, 2014

DOE/NETL-2011/1477

Disclaimer

This report was prepared as an account of work sponsored by an agency of the United States Government. Neither the United States Government nor any agency thereof, nor any of their employees, makes any warranty, express or implied, or assumes any legal liability or responsibility for the accuracy, completeness, or usefulness of any information, apparatus, product, or process disclosed, or represents that its use would not infringe privately owned rights. Reference therein to any specific commercial product, process, or service by trade name, trademark, manufacturer, or otherwise does not necessarily constitute or imply its endorsement, recommendation, or favoring by the United States Government or any agency thereof. The views and opinions of authors expressed therein do not necessarily state or reflect those of the United States Government or any agency thereof.

NETL Contact:

National Energy Technology Laboratory (NETL)

Morgan Summers, General Engineer

Office of Program Performance and Benefits

Prepared By:

Energy Sector Planning and Analysis (ESPA)

Vasant Shah, Norma J. Kuehn, Marc J. Turner

Sheldon J. Kramer
Consultant

This report was prepared by Energy Sector Planning and Analysis (ESPA) for the United States Department of Energy (DOE), National Energy Technology Laboratory (NETL). This work was completed under DOE NETL Contract Number DE-FE0004001. This work was performed under ESPA Task 341.02.07.

The authors wish to acknowledge the excellent guidance, contributions, and cooperation of the NETL staff, particularly:

Thomas J. Tarka, NETL, Team Lead, OSEAP

Kristin Gerdes, NETL, Office Director, OPPB

John Wimer, NETL, Office Director, SCC

DOE Contract Number DE-FE0004001

This page intentionally left blank.

Table of Contents

Executive Summary 1
Plant Design & Constraints 1
Performance Results 3
Economic Results 3
Cost Sensitivity to Financing Structures and Capital Charge Factors 5
1 Introduction 7
1.1 Site Description 7
1.2 Design Coal 8
1.3 Environmental Requirements 8
1.3.1 Carbon Dioxide 9
1.3.2 Mercury 10
1.4 Raw Water Usage 10
1.5 Balance of Plant 12
1.6 Economic Analysis 13
1.6.1 Capital Costs 14
1.6.2 Production Costs and Expenses 15
1.6.3 Cost of Production of Liquid Fuels 16
2 Plant Configuration 18
3 System Description 20
3.1 Synthesis Gas Production 21
3.1.1 Air Separation Unit 27
3.1.2 Coal Drying 28
3.1.3 Gasifier 29
3.1.4 Particulate Removal 29
3.1.5 Gas Scrubbing 30
3.1.6 Water Gas Shift through Acid Gas Removal 30
3.1.7 CO_2 Compression and Dehydration 33
3.1.8 Claus Unit 33
3.1.9 Zinc Oxide 33
3.2 Fischer-Tropsch Synthesis 34
3.3 Product Recovery 44
3.4 Recycle Gas Loop 45
3.5 Product Upgrading 45
3.5.1 Naphtha Hydrotreaters 45
3.5.2 Middle Distillate Hydrotreaters 45
3.5.3 Wax Hydrocracking 46
3.6 Power Production 47
3.6.1 Combustion Turbine Generators 47
3.6.2 Steam Turbine Power Generation 49
3.6.3 Flare Stack 50
4 Performance Summary and Mass Balances 51
4.1.1 Carbon Balance 53
4.1.2 Sulfur Balance 54
4.1.3 Water Balance 54
5 Cost Estimation Results 56

5.1 Capital and Operating Costs 56
5.2 Cost of Production 69
5.3 Cost of Carbon Capture 73
6 Conclusions and Recommendations 74
6.1 Conclusions.....74
6.2 Recommendations for Further Study 74
7 References.....75

List of Exhibits

Exhibit ES-1 Plant performance summary 3
Exhibit ES-2 Capital, operating cost, and COP summary 4
Exhibit ES-3 TOC ($1,000) with error bars 5
Exhibit ES-4 Comparison of ECO bbl and EPD bbl 6
Exhibit 1-1 Site ambient conditions 7
Exhibit 1-2 Site characteristics 7
Exhibit 1-3 Design coal analysis – Illinois No. 6 8
Exhibit 1-4 BACT environmental design basis 9
Exhibit 1-5 Standards of performance for electric utility steam-generating units built, reconstructed, or modified after February 28, 2005 9
Exhibit 1-6 Balance of plant design requirements 12
Exhibit 1-7 Process and cooling water properties 13
Exhibit 1-8 Features of an AACE Class 4 cost estimate 14
Exhibit 1-9 Financial structure for fuels projects 16
Exhibit 1-10 Financial assumptions for PSFM 17
Exhibit 3-1 Coal-to-liquids process flow diagram (red items only in sequestration case) 20
Exhibit 3-2 Block flow diagram of the gasification, syngas shift, and acid gas removal area (sequestration only systems shown in red) 22
Exhibit 3-3 Stream table for the gasification, syngas shift, and acid gas removal area – CO_2 sequestration case 23
Exhibit 3-4 Stream table for the gasification, syngas shift, and acid gas removal area – CO_2 vent case 25
Exhibit 3-5 Typical ASU process schematic 28
Exhibit 3-6 F-T reactor syngas operating parameters for both cases 30
Exhibit 3-7 Rectisol process flow diagram example 32
Exhibit 3-8 Simplified representation of the F-T synthesis section 35
Exhibit 3-9 Block flow diagram for the F-T synthesis and product upgrading area 37
Exhibit 3-10 Stream table for the F-T synthesis and product upgrading area – CO_2 sequestration 38
Exhibit 3-11 Stream table for the F-T synthesis and product upgrading area – CO_2 vent 41
Exhibit 3-12 Diesel properties 46
Exhibit 3-13 Wax hydrocracking model product yield distributions 46
Exhibit 3-14 Block flow diagram for the fuel gas preparation and power generation area 48
Exhibit 3-15 Fuel gas LHV comparison between turbine and F-T models 49
Exhibit 4-1 Plant performance summary – CO_2 sequestration case 52
Exhibit 4-2 Plant performance summary – CO_2 vent case 53
Exhibit 4-3 Elemental carbon mass balance – CO_2 sequestration case 54
Exhibit 4-4 Elemental carbon mass balance – CO_2 vent case 54
Exhibit 4-5 Water balance – CO_2 sequestration case 55
Exhibit 4-6 Water balance – CO_2 vent case 55
Exhibit 5-1 Total plant cost summary with CO_2 sequestration 57
Exhibit 5-2 Total operating and maintenance costs with CO_2 sequestration 62
Exhibit 5-3 Total plant cost summary – CO_2 vent 63
Exhibit 5-4 Total operating and maintenance costs – CO_2 vent 68
Exhibit 5-5 Cost estimation results summary (CO_2 sequestration) 69

Exhibit 5-6 COP sensitivity to market price of electricity 70
Exhibit 5-7 Comparison of TOC per F-T bbl, ECO bbl, and EPD bbl 71
Exhibit 5-8 FT-Liquids COP sensitivity to CCF 72
Exhibit 5-9 Cost summary of CTL facility with and without CCS 73

Acronyms and Abbreviations

AEO	Annual Energy Outlook
AGR	Acid gas removal
ASTM	formerly American Society for Testing and Materials
ASU	Air separation unit
ATR	Autothermal reformer
API	American Petroleum Institute
BACT	Best available control technology
bbl	barrel
BEC	Bare erected cost
BFD	Block flow diagram
BFW	Boiler feed water
bpd	barrel per day
Btu	British thermal unit
Btu/hr	British thermal unit per hour
Btu/kWh	British thermal unit per kilowatt hour
Btu/lb	British thermal unit per pound
CBTL	Coal and biomass to liquids
CBM	Coal bed methane
CCF	Capital charge factor
CCS	Carbon capture and sequestration
CF	Capacity factor
CFM	Cubic feet per minute
CFR	Code of Federal Regulations
CH_4	Methane
cm	Centimeter
CO	Carbon monoxide
CO_2	Carbon dioxide
COP	Cost of production of liquid fuels
COR	Contracting Officer's Representative
COS	Carbonyl sulfide
CT	Combustion turbine
CTG	Combustion turbine-generator
CTL	Coal-to-liquids
CWR	Circulating water return
CWS	Circulating water system
CWT	Cold water temperature
DCA	Direct contact aftercooler
DOE	Department of Energy
ECO	Equivalent crude oil
EIA	Energy Information Administration
EOR	Enhanced oil recovery
EPA	Environmental Protection Agency
EPC	Engineer/procure/construct
EPCM	Engineering/procurement/ construction management
EPD	Equivalent petroleum diesel
ESPA	Energy Sector Planning and Analysis
F-T, FT	Fischer-Tropsch
ft	Foot, Feet
FTL	Fischer-Tropsch liquid
gal	Gallon
GE	General Electric
GHG	Greenhouse gas
GJ	Gigajoules
GJ/hr	Gigajoules per hour
gpm	Gallons per minute
GT	Gas turbine
h, hr	Hour
H_2	Hydrogen
H_2O	Water
H_2S	Hydrogen sulfide
HAP	Hazardous air pollutant
HCl	Hydrochloric acid
Hg	Mercury
HDPE	High density polyethylene
HHV	Higher heating value
hp	Horsepower
HP	High pressure
HRSG	Heat recovery steam generator
HVAC	Heating, ventilating, and air conditioning
IGCC	Integrated gasification combined cycle
IOU	Investor owned utility
IP	Intermediate pressure
IRR	Internal rate or return
IRROE	Internal rate of return on equity
ISBL	Inside battery limits
ISO	International Standards Organization
kg/hr	Kilogram per hour
kJ	Kilojoules
kJ/hr	Kilojoules per hour
kJ/kg	Kilojoules per kilogram
km	Kilometer
kV	Kilovolt
kW	Kilowatt
kWe	Kilowatts electric

kWh	Kilowatt-hour
kWt	Kilowatts thermal
lb	Pound
lb/10^6Btu	Pounds per million British thermal units (also lb/MMBtu)
lb/hr	Pounds per hour
lb/ft^2	Pounds per square foot
lb/MMBtu	Pounds per million British thermal units (also lb/10^6Btu)
lb/MWh	Pounds per megawatt hour
LHV	Lower heating value
LNB	Low NO_x burner
LP	Low pressure
lpm	Liters per minute
m	Meters
mg	Milligram
m/min	Meters per minute
m^3/min	Cubic meter per minute
MMBtu	Million British thermal units (also shown as 10^6 Btu)
MMBtu/hr	Million British thermal units (also shown as 10^6 Btu) per hour
MP	Medium Pressure
MPa	Megapascals
MWe	Megawatts electric
MWh	Megawatt-hour
MWt	Megawatts thermal
N/A	Not applicable
NETL	National Energy Technology Laboratory
NGCC	Natural gas combined cycle
NH_3	Ammonia
NOx	Nitrogen oxides
NSPS	New Source Performance Standards
OPPB	Office of Program Performance and Benefits
O&M	Operation and maintenance
PM	Particulate matter
PM_{10}	Particulate matter measuring 10 µm or less
POTW	Publicly owned treatment works
ppm	Parts per million
ppmv	Parts per million volume
ppmvd	Parts per million volume, dry
PSA	Pressure swing adsorption
PSFM	Power systems financial model
psia	Pounds per square inch absolute
psid	Pounds per square inch differential
psig	Pounds per square inch gage
PT	Product transport
RDS	Research and Development Solutions, LLC
RMA	Raw material acquisition
RMT	Raw material transport
ROE	Return on equity
S#	Stoichiometric number
SGC	Synthesis gas cooler
SGS	Sour gas shift
SO_2	Sulfur dioxide
SOx	Oxides of sulfur
STG	Steam turbine generator
SWS	Sour water stripper
TASC	Total as-spent cost
TGTU	Tail gas treating unit
TOC	Total overnight cost
Tonne	Metric ton (1,000 kg)
TPC	Total plant cost
TPD	Tons per day
TPH	Tons per hour
TSS	Total suspended solids
T&S	Transport and storage
ULSD	Ultra-low sulfur diesel
U.S.	United States
USC	Ultra-supercritical
VGO	Vacuum gas oil
vol%	Volume percent
WGS	Water gas shift
wt%	Weight percent
WTI	West Texas Intermediate
WTW	Well-to-Wheels
ZnO	Zinc oxide
ZnS	Zinc sulfide
$/bbl	Dollars per barrel
µS/cm	micro Siemens per cm, a measure of conductivity
°C	Celsius
°F	Fahrenheit

Executive Summary

Economic and national security concerns related to liquid fuels have revived national interest in alternative liquid fuel sources. Coal-to-Fischer-Tropsch fuels production is a major technology option for many states and for the Department of Energy (DOE). This report examines the technical and economic feasibility of a commercial coal-to-liquids (CTL) facility in the Illinois coal basin that nominally produces 50,000 barrels per day (bbl/day) F-T liquids using an iron-based catalyst with an expected final product split of approximately 70:30 diesel/naphtha. The facility employs dry-feed Shell-type gasification technology and Fischer-Tropsch (F-T/FT) technology to produce commercial-grade diesel and naphtha liquids from medium-sulfur bituminous coal.

A minimal amount of excess electrical power is also produced and assumed to be sold into the power market to provide an operating credit in the cost estimation calculations.

The scope of this study includes:

- Development of a conceptual plant design
- Modeling and analysis of the process
- Capital cost estimate
- Economic viability assessment

Where incentives (e.g., loan guarantees) are available, this study concludes that a CTL facility is economically competitive with crude oil prices as low as $107 per barrel[1] – in the scenario where CO_2 is not sequestered – or $116 per barrel in the case where CO_2 is sequestered for greenhouse gas (GHG) impact mitigation[1].

As removal of CO_2 from the shifted gas is inherent to F-T operations, a large portion of the cost of capture is already incorporated into the design of a typical F-T facility. The low incremental cost of sequestration – about $9 per barrel of Equivalent Crude Oil, or $0.27 per gallon of petroleum diesel equivalent fuel – demonstrates the relatively low costs of additional capture requirement and compression.

If no incentives are available (using the commercial fuels financing structure), the CTL facility is economically viable when the crude oil prices are $125 per barrel – in the scenario where CO_2 is not sequestered – or $134 per barrel in the case where CO_2 is sequestered for GHG impact mitigation[1].

Plant Design & Constraints

The initial plant design used for this study was based on the April 2007 National Energy Technology Laboratory (NETL) report, "Baseline Technical and Economic Assessment of a Commercial Scale Fischer-Tropsch Liquids Facility." [1] The work in this study built upon and incorporated several design changes and improvements that were identified during that analysis

[1]The crude oil values listed above are based on Energy Information Administration (EIA) data of historic spot prices from June 2009 through November 2013 for the various fuel types. These were used to develop correlations between the various fuel prices and the West Texas Intermediate (WTI) crude oil price (Crude oil: Ultra-low sulfur diesel is 1.25 and Naphtha:Diesel is 0.70). The correlations were used to estimate the Equivalent Crude Oil (ECO) price. The ECO price is the minimum market price for crude oil at which the first-year COPs will be met.

and through other work, such as the January 2009 NETL report, "Affordable, Low-Carbon Diesel Fuel from Domestic Coal and Biomass." [2] Design changes from the April 2007 study include:

1. The gasifier system was changed from the ConocoPhillips E-Gas™ system to a dry-feed, single-stage, entrained-flow system similar to a Shell Global Solutions commercial design.
2. The operations of the F-T liquids upgrading units were altered to achieve a product split emphasizing diesel fuel production over naphtha (approximately 70:30). Specifically, the wax hydrocracking unit was adjusted to provide the desired diesel yield.
3. The process configuration was changed to increase the amount of CO_2 captured for storage by adding a new water-gas shift (WGS) reactor prior to the combined cycle power generation step to convert CO to CO_2, and by employing a dual-stage Rectisol® unit upstream of the F-T Synthesis loop for CO_2 separation.
4. A second scenario was added in order to ascertain the incremental cost of CO_2 sequestration. In this scenario, the separated CO_2 is vented to the atmosphere instead of compressing, transporting, and storing it. The CO_2 is still separated to prevent the build-up of inert CO_2 in the recycle loop and otherwise reduce equipment sizes, and consequently capital costs.
5. The system design incorporated low-cost efforts to reduce water usage.

The CTL plant design that was evaluated utilizes an iron-based catalyst and a low-temperature F-T reactor. The concept includes a total of eight gasifiers that produce syngas, which is cleaned and combined before being ducted to the F-T reactor.

Vapor products from the second-stage reactors (those leaving the F-T synthesis section) are sent to a cyclone to prevent liquid carryover. They are then cooled and sent to a three-phase separator. The hot condensate is sent to the product upgrading processes. The remaining vapors are processed for CO_2 removal, oxygenate removal, dehydration, and additional hydrocarbon recovery. The majority of the resulting tail-gas vapor is recycled to the F-T reactor, with the remainder being processed in the hydrogen recovery unit.

The remaining pre-fuel gas from the hydrogen recovery unit is mixed with the light gases produced in the hydrocarbon upgrading sections and the off-gas from the wax stream. In the case of the CO_2 sequestration case, this fuel gas is shifted to maximize CO_2 capture potential. In both cases, a portion of the fuel gas is separated out for combustion in direct-fired heaters, which allows for more steam from the heat recovery to be directed to electrical power production. An additional portion of fuel gas is utilized for coal drying and the remainder is sent to the combustion turbines.

The plant was designed with the goal to operate independent of the bulk electric power system (i.e. the power grid) during steady-state operations – producing enough power for plant needs – while minimizing the production of export power (export power was desired to be less than 10 percent of total electrical power production). The total amount of excess electrical power output varies based on a combination of the internal heat requirements (consumption of fuel gas) and facility heat sources (available for steam production) as well as on whether CO_2 captured at the facility is to be sequestered or merely vented to the atmosphere due to the large electrical load associated with compression.

The electrical power was produced via two sources and in the following ways: 1) the steam from the F-T reactor and from the combustion turbine heat recovery unit were combined and utilized in steam turbines, and 2) the aforementioned fuel gas by-product from the F-T process was combusted in off-the-shelf GE turbines, which were sized specifically to the available fuel flow in order to achieve the goal of minimizing the export power.

The sequestration case achieves the goal of producing less than 10 percent excess electricity (4.6 MW_e); however, as the vent case was designed to have the same coal flow rate as the sequestration case in order to maintain a liquids output of 50,000 bbl/day, it produces 97.1 MW_e and consequently does not meet the excess electricity production limit.

Performance Results

Total plant performance data are summarized in Exhibit ES-1. Both facilities were designed to nominally produce 50,000 bpd of liquid fuels, but the CO_2 vent case is slightly more thermally efficient owing to the reduced parasitic load (the result of not having to compress the CO_2).

Exhibit ES-1 Plant performance summary

	CO_2 Sequestration Case	CO_2 Vent Case
As-received Coal Feed Rate, tonne/day (tpd)	19,056 (21,006)	19,056 (21,006)
Syngas feed rate, lb/hr	2,498,396	2,498,396
Fuel gas recycle rate, lb/hr	743,921	743,921
Diesel Production, bbl/day	35,230 (70.5%)	35,230 (70.5%)
Naphtha Production, bbl/day	14,762 (29.5%)	14,762 (29.5%)
Gross Plant Power, MW_e	427	473
Net Plant Power for Export, MW_e	4.7	97.1
Carbon Dioxide Captured, tonne/day (tpd)	23,954 (26,405)	23,196 (25,569)
Carbon Dioxide Sequestered, tonne/day (tpd)	23,954 (26,405)	n/a

The CTL plant is capable of producing 35,230 bbl/day of commercial-grade diesel liquid (70.5 percent) and 14,762 bbl/day of F-T naphtha liquids (29.5 percent). The naphtha would be shipped to a refinery for further upgrading into commercial-grade end products or for use as a feedstock for the chemicals industry.

Economic Results

The capital and operating costs, as well as the breakeven selling prices required for the project to be economically viable (meeting a 20 percent Internal Rate of Return on Equity [IRROE]), are summarized in Exhibit ES-2. As shown, a commercial-scale CTL facility will require approximately $6.4 and $6.5 billion in total overnight cost for the CO_2 vent case and CO_2 sequestration cases, respectively, ranging between $127,996 and $130,662 per barrel of F-T liquids daily production capacity ($/bbl/day). For comparison purposes, the TOC values are shown in Exhibit ES-3 in thousands of dollars ($1,000) with error bars demonstrating the impact of the +30%/-15% accuracy (see Section 1.6.1) in the available cost estimates for this study and consistent with the screening study level of design engineering.

The primary figure-of-merit in this report is the cost of production (COP) (a.k.a. required selling price) expressed in $/bbl of product. The COP values were calculated using the Power Systems Financial Model (PSFM) and estimated to be the value that yields a net present value of zero at a given internal rate of return on equity (IRROE) for 30 years of operation based on the assumed financial structure and escalations. The COP was assumed to escalate at three percent per year for the thirty-year economic life of the plant. All costs are expressed in June 2011 dollars. Two financial structures were assumed for calculating the figures-of-merit. These structures are based on typical values for fuel projects with and without loan guarantees or government subsidies. The results are listed in Exhibit ES-2.

Two additional figures-of-merit included in this study are the equivalent crude oil (ECO) price and the equivalent petroleum diesel (EPD) price. These are the theoretical crude oil and petroleum based diesel prices, based on historic data that would produce the calculated COP values. Both of the equivalent prices take into account the differences in energy content between the F-T and petroleum-derived fuels (explained further in Section 1.6.3). These results are also listed in Exhibit ES-2.

For cases with loan guarantee incentives, the facility will be economically competitive with traditional (or petroleum) means of fuel production when crude oil prices are between $107/bbl and $116/bbl for the CO_2 vent and sequestration cases, respectively. This equates to a petroleum-diesel equivalent price of $3.18/gallon and $3.44/gallon (prices do not include federal or state taxes) for the CO_2 vent and sequestration cases, respectively. The fuel produced in the sequestration case is more expensive due to the compression, transport, and storage costs, as evidenced by the positive value for the incremental cost of CCS.

Exhibit ES-2 Capital, operating cost, and COP summary

	CO_2 Sequestration	CO_2 Vent	Incr. CCS Cost
Total Overnight Cost, $1000	6,532,052	6,398,760	133,292
Total Overnight Cost, ($/bbl/day)	130,662	127,996	2,666
Total As Spent Cost*, $1000	7,494,877 [7,715,660]	7,341,938 [7,558,216]	152,939 [157,444]
Total As Spent Cost*, ($/bbl/day)	149,922 [154,388]	146,862 [151,189]	3,060 [3,150]
Total annual fixed O&M, $1000	200,854	197,405	3,448
Total variable O&M (90% CF), $1000	130,076	127,370	2,706
Total annual fuel cost (90% CF), $1000	473,377	473,377	0
Total annual power credit (90% CF), $1000	-2,149	-44,844	42,695
COP F-T Diesel, $/bbl$_{FTD}$	133.2 [154.2]	123.1 [143.7]	10.1 [10.5]
COP F-T Naphtha, $/bbl$_{FTN}$	92.8 [107.4]	85.8 [100.1]	7.0 [7.3]
Equivalent Crude Oil Price*, $/bbl$_{ECO}$	115.6 [133.8]	106.9 [124.7]	8.7 [9.1]
Equivalent Petroleum Diesel Price*, $/bbl$_{EPD}$	144.5 [167.2]	133.6 [155.8]	10.9 [11.4]

** Values are shown for two financial structures. The first (lower) value is based on the loan guarantee finance structure. The second (higher/bracketed) value is based on the commercial fuels finance structure.*
All costs in June 2011 dollars.

Exhibit ES-3 TOC ($1,000) with error bars

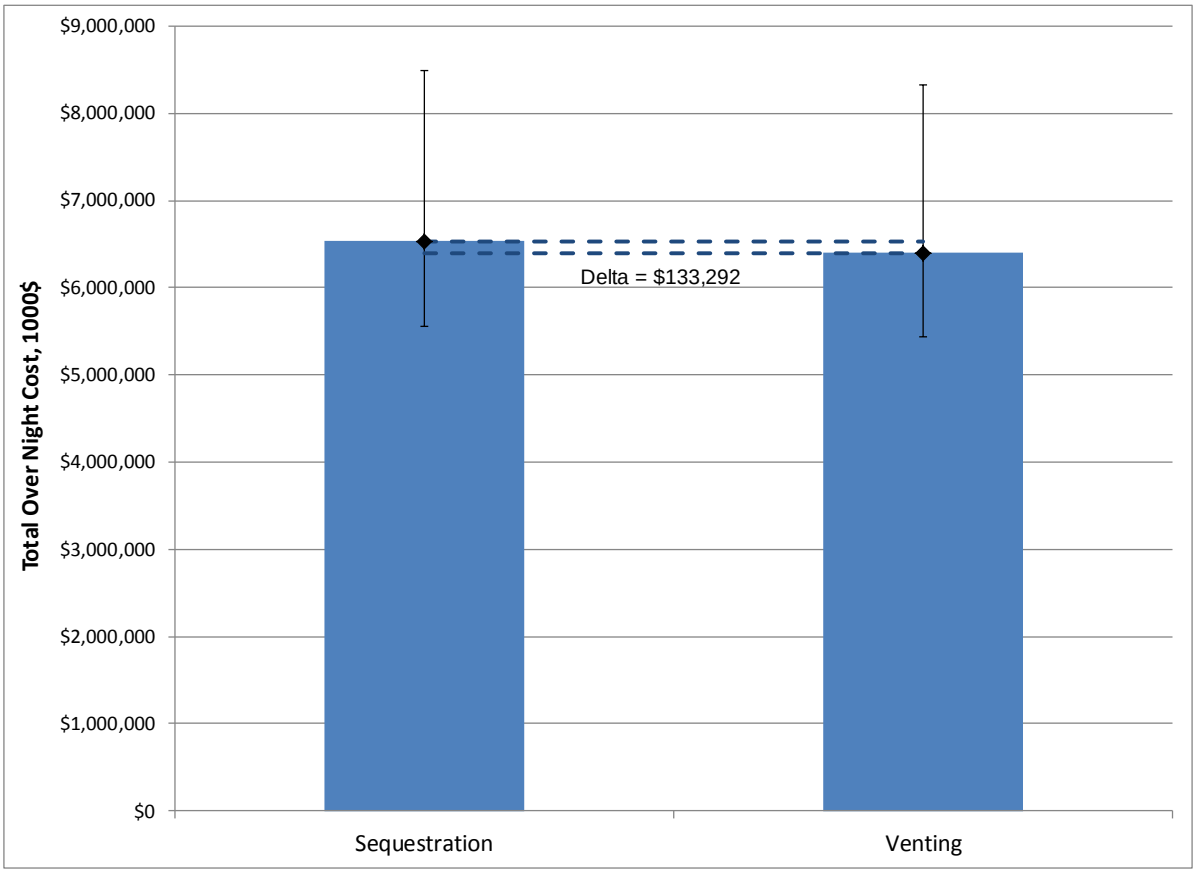

Source: NETL

Cost Sensitivity to Financing Structures and Capital Charge Factors

Two financial structures were examined in this study: the first structure, considered to be representative of a commercial fuels project, is assumed to have no loan guarantees, while the second structure assumed moderate government incentives – in the form of government loan guarantees. Both scenarios face a high degree of market risk as the facilities involve a large amount of capital that must be financed with revenues from a volatile commodity fuels market; co-production of electricity via an integrated gasification combined cycle (IGCC) plant allows for diversification of products which dampens the impact of the volatile fuels market. The COPs for both structures are listed in Exhibit ES-2. The costs include a credit of $60/MWh for excess power generated. The sensitivity of economic results to the power credit and different financing structures is included in Section 5.2.

To achieve economic viability, a commercial-scale CTL facility equipped for CO_2 sequestration will require crude oil prices to be above $133.8/bbl (in the case with no incentives) and $115.6/bbl (in the moderate incentives case) to obtain parity with petroleum derived diesel.

Exhibit ES-4 summarizes the results of the study, presenting the equivalent crude oil prices and equivalent petroleum diesel prices for each scenario. The sequestration case with no loan guarantees has the highest ECO price and EPD price ($133.8/bbl and $167.2/bbl, respectively). The case that includes incentives and does not sequester CO_2 has the lowest ECO price and EPD

price ($106.9/bbl and $133.6/bbl, respectively) due primarily to the lower CCF, but also in part to the increased power production, reduced auxiliary loads, and reduced capital cost resulting from the exclusion of CO_2 compression systems.

Exhibit ES-4 Comparison of ECO bbl and EPD bbl

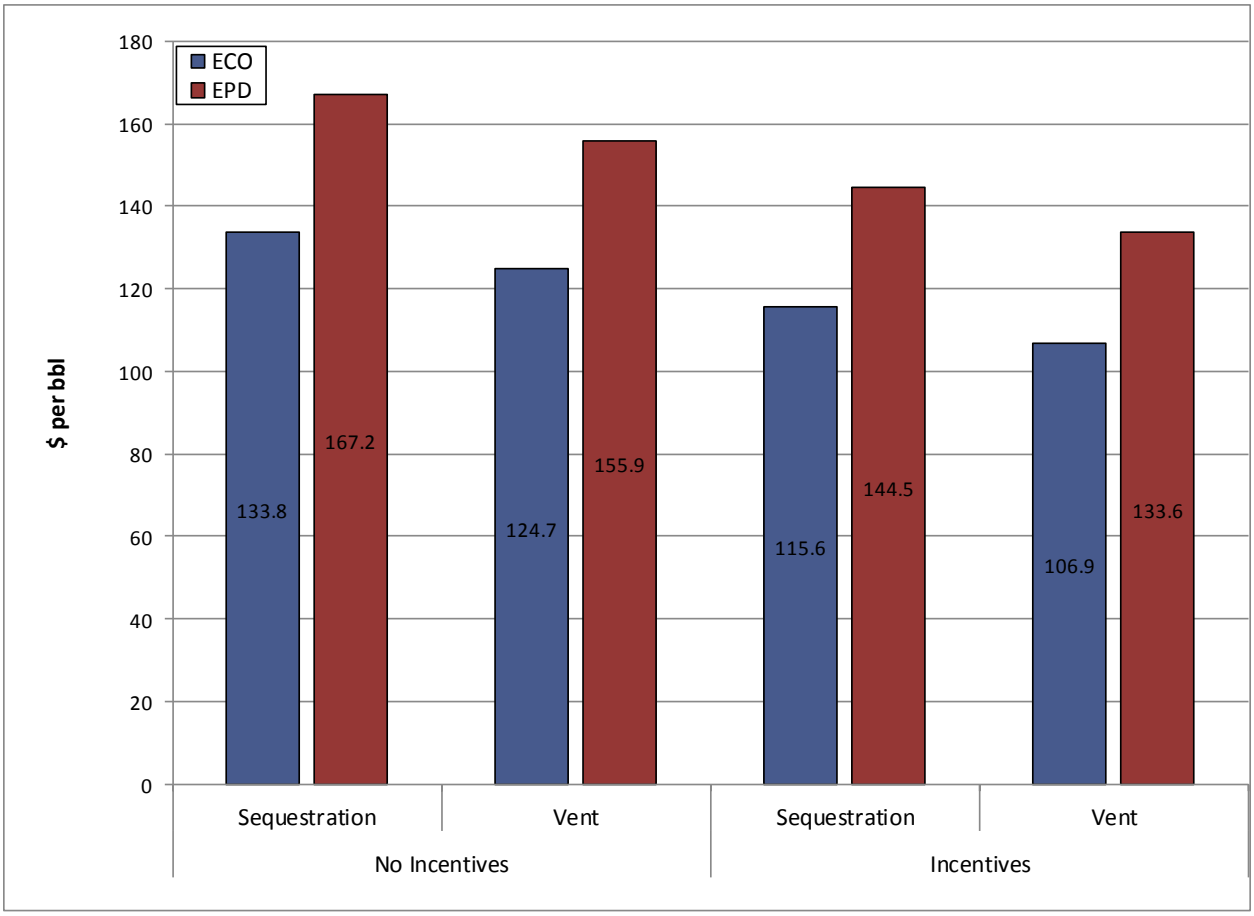

Source: NETL

1 Introduction

The objective of this report is to assess the design and financial performance of a commercial-scale coal-to-Fischer-Tropsch liquids plant using a dry-feed Shell Global Solutions-type commercial gasifier with optimum carbon capture.

1.1 Site Description

All plants in this study are assumed to be located at a generic plant site in the Midwestern United States, with ambient conditions and site characteristics as presented in Exhibit 1-1 and Exhibit 1-2.

Exhibit 1-1 Site ambient conditions

Elevation, ft	0
Barometric Pressure, psia	14.7
Design Ambient Temperature, Dry Bulb, °F	59
Design Ambient Temperature, Wet Bulb, °F	51.5
Design Ambient Relative Humidity, %	60

Exhibit 1-2 Site characteristics

Location	Greenfield, Midwestern United States
Topography	Level
Size, acres	300
Transportation	Rail, Road, Pipeline
Ash Disposal	Off Site
Water	Municipal (50%) / Groundwater (50%)
Access	Landlocked, with access by railway and highway
CO_2 Storage	Delivered to plant boundary at 15.2 MPa (2,215 psia)

The following design parameters are considered site-specific and are not quantified for this study. Allowances for normal conditions and construction are included in the cost estimates.

- Flood plain considerations
- Existing soil/site conditions
- Water discharges and reuse
- Rainfall/snowfall criteria
- Seismic design
- Buildings/enclosures
- Fire protection
- Local code height requirements
- Noise regulations, and their impact on site and surrounding area

1.2 Design Coal

The design coal assumed for this study is presented in Exhibit 1-3.

Exhibit 1-3 Design coal analysis – Illinois No. 6

Rank	Bituminous	
Seam	Illinois No. 6 (Herrin)	
Source	Old Ben mine [3]	
Proximate Analysis (weight %)[a]		
	As Received	**Dry**
Moisture	11.12	0.00
Ash	9.70	10.91
Volatile Matter	34.99	39.37
Fixed Carbon	44.19	49.72
Total	100.00	100.00
Sulfur	2.51	2.82
HHV, kJ/kg	27,113	30,506
HHV, Btu/lb	11,666	13,126
LHV, kJ/kg	26,151	29,544
LHV, Btu/lb	11,252	12,712
Ultimate Analysis (weight %)		
	As Received	**Dry**
Moisture	11.12	0.00
Carbon	63.75	71.72
Hydrogen	4.50	5.06
Nitrogen	1.25	1.41
Chlorine	0.29	0.33
Sulfur	2.51	2.82
Ash	9.70	10.91
Oxygen[b]	6.88	7.75
Total	100.00	100.00

Notes:
[a] The proximate analysis assumes sulfur as volatile matter
[b] By difference

1.3 Environmental Requirements

The environmental control equipment used in the conceptual design conforms to best available control technology (BACT) guidelines, which are summarized in Exhibit 1-4.

Exhibit 1-4 BACT environmental design basis

Pollutant	Environmental Design Basis	
	Control Technology	Limit
Sulfur Oxides (SO_2)	Rectisol®/Selexol/Econamine Plus/Sulfinol-M + Claus Plant	99^+% or ≤ 0.050 lb/10^6Btu
Nitrogen Oxides (NOx)	LNB and N_2 Dilution primarily with humidification as needed	15 ppmvd (@ 15% O_2)
Particulate Matter (PM)	Cyclone/Barrier Filter/Wet Scrubber/AGR Absorber	0.006 lb/10^6Btu
Mercury (Hg)	Activated Carbon Bed	95% removal

While the coal-to-liquids (CTL) process is considered a petrochemical complex, the regulations on emissions considered in this study were for fossil-fuel-fired power plants. The current regulation governing new fossil-fuel-fired power plants is the New Source Performance Standards (NSPS) published in February 2006 and shown in Exhibit 1-5. These standards supersede the previous performance standards established in 1978. [4] The new standards apply to units with the capacity to generate greater than 73 MW of power by burning fossil fuels, as well as cogeneration units that sell more than 25 MW of power and more than one-third of the potential output capacity to any utility power distribution system. The rule also applies to combined cycle, including integrated gasification combined cycle (IGCC) plants, and combined heat and power combustion turbines that burn 75 percent or more synthetic-coal gas.

Exhibit 1-5 Standards of performance for electric utility steam-generating units built, reconstructed, or modified after February 28, 2005

Pollutant	New Units		Reconstructed Units		Modified Units	
	Emission Limit	% Reduction	Emission Limit (lb/10^6Btu)	% Reduction	Emission Limit (lb/10^6Btu)	% Reduction
PM	0.015 lb/10^6Btu	99.9	0.015	99.9	0.015	99.8
SO_2	1.4 lb/MWh	95	0.15	95	0.15	90
NOx	1.0 lb/MWh	N/A	0.11	N/A	0.15	N/A

The BACT emission limits assumed for this study exceed the emission requirements of the 2006 NSPS. It is possible that state and local requirements could supersede NSPS or BACT and impose even more stringent requirements.

1.3.1 Carbon Dioxide

For both the sequestration and vent cases, the basis is an optimum removal based on carbon input in the coal, and excluding carbon in the Fischer-Tropsch (F-T) product and the carbon that exits the gasifier with the slag. CO_2 is captured from the syngas leaving the gasifiers using the Rectisol® process, from the vapor stream exiting the F-T reactor using a proprietary amine CO_2-removal system, and in the sequestration case only CO_2 is captured from the fuel gas

downstream of the water gas shift (WGS) unit using a proprietary amine system. The design includes compression of the recovered CO_2 to 2,215 psia for pipeline transport at the plant boundary. The CO_2 is transported 100 km (62 miles) via pipeline to a geologic sequestration field for injection into a saline formation. The CO_2 is transported and injected as a supercritical fluid in order to avoid two-phase flow and achieve maximum efficiency. CO_2 transport and storage (T&S) performance specifications were independently estimated by the National Energy Technology Laboratory (NETL). The T&S estimation methodology is explained in more detail in the Quality Guidelines for Energy System Studies (QGESS) document "Carbon Dioxide Transport and Storage Costs in NETL Studies." [5]

1.3.2 Mercury

The mercury content in the Illinois No. 6 coal is reported as a mean value of 0.09 ppm (dry basis), with a standard deviation of 0.06, based on 34 samples of coal shipped by Illinois mines. Mercury capture from the syngas via activated carbon is assumed to be 95 percent, based on experience at the Eastman Chemical plant. If additional capture is necessary, dual carbon beds can be used to achieve greater than 99 percent mercury removal.

1.4 Raw Water Usage

Raw water makeup is assumed to be provided 50 percent by publicly owned treatment works (POTW) and 50 percent from groundwater. The amount of raw water usage for an IGCC case has been estimated in a previous study done for NETL. [5] In that study, raw water usage was defined as the water metered from a raw water source and used in the plant processes for any and all purposes, such as cooling tower makeup, condenser makeup, ash handling makeup, syngas humidification, and quench system makeup. In that study, as in the current study, the plant is equipped with an evaporative cooling tower, and all process blowdown streams are treated and recycled to the cooling tower. This is the "lowest hanging fruit" on the water minimization system.

Since the F-T plant differs from an IGCC plant, the technique for estimating water usage is different and based on the following:

1. The power generation processes were modeled in the Aspen process simulation program, which calculates the required cooling water load and stack water loss.
2. The Aspen model for the F-T synthesis area and the product upgrading area was used to predict the required F-T cooling water load.
3. The total of the cooling tower blowdown and vaporization losses was predicted based on the estimated cooling water circulation rate.

Other water minimization options are possible but were not factored into the present study. One option to reduce the makeup water demand would be to add a reverse osmosis unit and treat the cooling tower system blowdown streams and recycle them either to the cooling tower or steam systems. However, most of the water loss is evaporative loss from the cooling towers. More air-cooled heat exchangers could be added to reduce the load on the cooling tower and its corresponding evaporative losses.

Another water minimization option includes recovering water from the coal dryer. The Shell-based gasification process uses a dry-feed system, which is sensitive to the coal moisture content.

Coal moisture consists of two parts: surface moisture and inherent moisture. For coal to flow smoothly through the lock hoppers, the surface moisture must be removed. The Illinois No. 6 coal used in this study contains 11.12 percent total moisture on an as-received basis. It was assumed that the coal must be dried to 5 percent moisture to allow for smooth flow through the dry-feed system. The coal is simultaneously crushed and dried in the coal mill then delivered to a surge hopper with an approximate 2-hour capacity. The drying medium is provided by combining the off-gas from the Claus plant and a slipstream of clean syngas and passing them through an incinerator. The incinerator flue gas, with an oxygen content of 6 volume percent, is then used to dry the coal in the mill. The design does not include the recovery of water from the coal drying system.

1.5 Balance of Plant

Assumed balance of plant requirements are listed in Exhibit 1-6.

Exhibit 1-6 Balance of plant design requirements

Cooling system	Recirculating, Evaporative Cooling Tower Cooling tower makeup water composition is available. [3]
Fuel and Other storage	
Coal	30 days
Slag	30 days
Sulfur	30 days
Plant Distribution Voltage	
Motors below 1 hp	110/220 volt
Motors 250 hp and below	480 volt
Motors above 250 hp	4,160 volt
Motors above 5,000 hp	13,800 volt
Steam and Gas Turbine generators	24,000 volt
Grid Interconnection voltage	345 kV
Water and Waste	
Makeup Water	Process water is available at a flow rate of 1,500 gpm. [3]
Feed water	Process water treatment is included and will produce boiler feed quality water.
Process Wastewater	Process wastewater and storm water that contacts equipment surfaces is collected and treated for recycle as slurry or quench makeup. Selected blowdown is discharged through a permitted discharge permit.
Sanitary Waste Disposal	Design includes a packaged domestic sewage treatment plant with effluent discharged to the industrial wastewater treatment system. Sludge is hauled off site.
Water Discharge	Most of the wastewater is recycled for plant needs. Blowdown is treated for chloride and metals, and discharged.
Solid Waste	Slag is assumed to be a solid waste that is classified as non-hazardous. An offsite waste disposal site is assumed to have the capacity to accept waste generated throughout the life of the facility. Solid waste sent to disposal is at an assumed nominal fee per ton, even if the waste is hauled back to the mine. Solid waste generated that can be recycled or reused is assumed to have a zero cost to the technology.

Process water and cooling water come from two different treatment facilities. The composition and physical properties of each are shown in Exhibit 1-7.

Exhibit 1-7 Process and cooling water properties

Property	Process Water	Cooling Water
Total Dissolved Solids (TDS)	200 µS/cm	1250 µS/cm
Total Suspended Solids (TSS)	N/A	N/A
Hardness	100 mg/l as $CaCO_3$	75 mg/l as $CaCO_3$
Alkalinity	100 ppm	350 ppm
Sulfate	4 ppm	50 ppm
Chloride	10 ppm	200 ppm
Silica	30 mg/l	30 mg/l
Aluminum	N/A	N/A
Iron	0.25 mg/l	0.25 mg/l
Calcium	70 mg/l	25 mg/l
Magnesium	25 mg/l	45 mg/l
Phosphate	0.4 mg/l	6.0 mg/l (ortho)
Ammonia	<1 mg/l	19 mg/l
Chlorine	<0.1 mg/l	<0.1 mg/l
pH	8.0	8.0

1.6 Economic Analysis

Estimates of capital cost, operating costs, and financial performance were updated using the best available information and expressed in June 2011 dollars.

Capital cost and production cost estimates developed for the CTL plant were based on adjusted vendor-furnished, actual cost data, or best possible projections (when necessary). The financial performance of the facility was estimated using various costs, product prices, and financial parameters to generate a cost of production (COP) value.

Detailed information pertaining to topics such as contracting strategy, EPC contractor services, estimation of capital cost contingencies, owner's costs, cost estimate scope, economic assumptions, finance structures, cost of electricity, etc. are available in the April 2011 revision of the QGESS document "Cost Estimation Methodology for NETL Assessment of Power Plant Performance" [6] Select portions are repeated here for completeness.

Despite the application of process contingencies and other best efforts to realistically project the cost of emerging technologies, it should be noted that such cost projections are often shown to be optimistic when compared to actual costs. Accordingly, the "next commercial offering" cost estimates in this report, while intended for plants that lie somewhere between first-of-a-kind (FOAK) and nth-of-a-kind (NOAK) in the maturity spectrum, could be closer to NOAK plant costs given the inherent "technology optimism" associated with projecting costs for emerging technologies. Continuing research and development could result in technologies that are more advanced than the emerging technologies assessed by this report, leading to costs that are lower than those estimated herein.

Detailed information regarding FOAK and NOAK can be found in the August 2013 revision of the QGESS document "Technology Learning Curve (FOAK to NOAK)" [7]

1.6.1 Capital Costs

The cost estimation methodology is explained in more detail in Section 2.7 of "Cost and Performance Baseline for Fossil Energy Power Plants, Volume 1: Bituminous Coal and Natural Gas to Electricity." [8]

Bare erected costs (BEC) comprises the cost of process equipment, on-site facilities and infrastructure that support the plant (e.g., shops, offices, labs, road), and the direct and indirect labor required for its construction and/or installation. The cost of EPC services and contingencies are not included in BEC. BEC is an overnight cost expressed in base-year dollars.

Engineering, procurement, and construction costs (EPCC) comprise the BEC plus the cost of services provided by the engineering, procurement and construction (EPC) contractor. EPC services include: detailed design, contractor permitting (i.e., those permits that individual contractors must obtain to perform their scopes of work, as opposed to project permitting, which is not included here), and project/construction management costs. EPCC is an overnight cost expressed in base-year dollars.

Total plant costs (TPC) comprise the EPCC plus project and process contingencies. TPC is an overnight cost expressed in base-year dollars.

Total overnight capital costs (TOC) comprise the TPC plus all other overnight costs, including owner's costs. TOC is an "overnight" cost, expressed in base-year dollars and as such does not include escalation during construction or interest during construction. The TOC for each plant was calculated by adding owner's costs to the total plant cost (TPC).

Total as-spent capital costs (TASC) are the sum of all capital expenditures as they are incurred during the capital expenditure period including their escalation. TASC also includes interest during construction. Accordingly, TASC is expressed in mixed, current-year dollars over the capital expenditure period.

The capital costs have an estimated accuracy of +30/-15 percent, consistent with the screening study level of design engineering applied to the two cases in the study. The accuracy reflects the recommended practice 18R-97 guidelines of the AACE (formerly Association for the Advancement of Cost Engineering International) for estimates intended for the purpose of a "Feasibility Study" (AACE Class 4). [9] Exhibit 1-8 describes the characteristics of an AACE Class 4 cost estimate. The value of the study lies not in the absolute accuracy of the individual cases, but in the fact that both cases were evaluated under the same set of technical and economic assumptions. The consistency of approach allows meaningful comparisons.

Exhibit 1-8 Features of an AACE Class 4 cost estimate

Project Definition	Typical Engineering Completed	Expected Accuracy
1 to 15%	• plant capacity, block schematics, indicated layout, process flow diagrams for main process • systems, and preliminary engineered process and utility • equipment lists	-15% to -30% on the low side, and +20% to +50% on the high side

The costs are grouped according to a process/system oriented code of accounts. This type of code-of-account structure has the advantage of grouping all reasonably allocable components of a system or process so they are included in the specific system account. (This would not be the case had a facility, area, or commodity account structure been chosen instead).

Process contingency was added to cost account items that were deemed to pose significant risk due to lack of operating experience. Process contingency is intended to compensate for uncertainty in cost estimates caused by performance uncertainties associated with the development status of a technology. Process contingencies are applied to each plant section based on its current technology status using guidelines in the AACE International Recommended Practice 16R-90. [10]

Project contingency was added to the EPCC accounts to cover the cost of any additional equipment or other costs that would result from a more detailed design. Project contingencies are added to the summation of EPC and process contingency costs.

Both contingencies represent costs that are expected to occur. Each BEC account was evaluated against the level of estimate detail and field experience to determine project contingency.

TOC values are expressed in June 2011 dollars. The estimate represents current commercial offerings for the gasification and F-T technologies, or best possible projections for very near-term, yet non-commercial, offerings. The estimates represent a complete fuels plant facility. The boundary limit is defined as the total plant facility within the "fence line," including the coal receiving facilities, power generation facility, and water supply system. Costs were grouped according to a process/system-oriented code of accounts.

1.6.2 Production Costs and Expenses

The production or operating and maintenance (O&M) costs described in this report section pertain to charges associated with operating and maintaining the entire plant over its expected life.

O&M costs are determined on an annual basis for the first year of operation. Quantities for major consumables such as fuel were taken from the heat and mass balance developed for this application. Other consumables evaluated on the basis of the quantity required the use of reference data. Operating labor costs were determined on the basis of the number of operators. Maintenance costs were evaluated on the basis of requirements for each major plant section.

The O&M costs and expenses associated with the plant include:

- Operating labor
- Maintenance – material and labor
- Administrative and support labor
- Consumables
- Fuel cost
- Taxes and insurance

These costs and expenses are estimated on a reference basis and escalated to June 2011 dollars. The costs assume normal operation and do not include the initial startup costs. The operating labor, maintenance material and labor, and other labor-related costs were combined and then divided into two components: fixed O&M costs, which are independent of liquids production,

and variable O&M costs, which are proportional to liquids production. The variable O&M cost estimate allocation is based on the plant capacity factor.

The other operating costs, consumables and fuel, are determined on a daily 100-percent operating capacity basis and adjusted to an annual plant operation basis. The inputs for each category of operating costs and expenses are identified in the succeeding subsections, along with more specific discussion of the evaluation processes.

The petroleum equivalent diesel price is calculated by taking the cost of production for diesel in $/bbl and multiplying this value by the ratio of the lower heating values of FT diesel and petroleum diesel.

$$Petroleum\ Equivalent\ Diesel\ Price = \left(\frac{Petroleum\ Diesel\ LHV}{FT\ Diesel\ LHV}\right) * FY\ COP\ FT\ Diesel$$

The equivalent crude oil price is then calculated by multiplying the petroleum equivalent diesel price by a factor of 0.80. The factor of 0.80 was calculated from data of historic spot prices provided by the EIA from June 2009 through November 2013 for various fuel types.

$$Equivalent\ Crude\ Oil = 0.80 * Petroleum\ Equivalent\ Diesel\ Price$$

This data was used to develop correlations between the various fuel prices and the WTI crude oil price (Crude oil: Ultra-low sulfur diesel is 1.25 and Naphtha: Diesel is 0.70). The ECO price is the theoretical crude oil price, based on historic data, which would produce the calculated COP.

1.6.3 Cost of Production of Liquid Fuels

The figure-of-merit in this report is the COP expressed in $/bbl. The COPs were calculated using the Power Systems Financial Model (PSFM) which is a discounted cash flow model. [11] The COP values is estimated to be the required revenue that yields a net present value of zero at a given internal rate of return on equity (IRROE) for 30 years of operation based on the assumed financial structure and escalations. COP is assumed to escalate at three percent per year for the thirty-year economic life of the plant. All costs are expressed in June 2011 dollars.

The capital and operating costs for CO_2 T&S were modeled based on the specifications in the NETL QGESS: [5] In the sequestration case, the costs were combined with the plant capital and operating costs to produce an overall COP.

There are two project financial structures: one is representative of commercial fuel projects and the second is representative of a project with loan guarantees. The economic assumptions used to estimate the COPs are shown in Exhibit 1-9 and Exhibit 1-10. [12,13]

Exhibit 1-9 Financial structure for fuels projects

Scenario	Commercial Fuels	Loan Guarantees
Percent Debt	50%	60%
Percent Equity	50%	40%
Debt Interest Rate	8.00%	4.56%
Internal Rate of Return on Equity (IRROE)	20%	20%
After Tax Weighted Cost of Capital	12.48%	9.70%
Capital Charge Factor (CCF)	0.218	0.170

Exhibit 1-10 Financial assumptions for PSFM

Parameter	Value
TAXES	
Income Tax Rate	38% (Effective 34% Federal, 6% State)
Capital Depreciation	20 years, 150% declining balance
Investment Tax Credit	None
Tax Holiday	None
FINANCING TERMS	
Repayment Term of Debt	30 years
Grace Period on Debt Repayment	None
Debt Reserve Fund	None
TREATMENT OF CAPITAL COSTS	
Capital Cost Escalation During Construction (nominal annual rate)	3.6%[a]
Distribution of Total Overnight Capital over the Capital Expenditure Period (before escalation)	5-Year Period: 10%, 30%, 25%, 20%, 15%
Working Capital	zero for all parameters
% of Total Overnight Capital that is Depreciated	100% *(this assumption introduces a very small error even if a substantial amount of TOC is actually non-depreciable)*
INFLATION	
COP, O&M, Fuel Escalation (nominal annual rate)	3.0%[b] COP, O&M, ECO, Fuel

[a] A nominal average annual rate of 3.6 percent is assumed for escalation of capital costs during construction. This rate is equivalent to the nominal average annual escalation rate for process plant construction costs between 1947 and 2008, according to the *Chemical Engineering* Plant Cost Index.

[b] An average annual inflation rate of 3.0 percent is assumed. This rate is equivalent to the average annual escalation rate between 1947 and 2008 for the U.S. Department of Labor's Producer Price Index for Finished Goods, the so-called "headline" index of the various Producer Price Indices. (The Producer Price Index for the Electric Power Generation Industry may be more applicable, but that data does not provide a long-term historical perspective since it only dates back to December 2003.)

2 Plant Configuration

The CTL process configuration chosen for this study is designed to

(1) Maximize the conversion of feedstocks to liquid transportation fuels, achieved through recycling unreacted synthesis gas back to the reactor;

(2) Maximize diesel fuel as the primary liquid fuel product;

(3) Produce enough electrical power for the facility to be self-sufficient, but minimize exported electrical power to a level no greater than 10 percent of the internal power requirements for the CO_2 sequestration case;

(4) Minimize the amount of CO_2 and other greenhouse gases released to the atmosphere during production of the fuel, in so far as plant performance or final product cost is not significantly impacted.

The facility was designed to produce 50,000 bbl/day of F-T liquids using an iron-based catalyst with an expected final product split of approximately 70:30 diesel/naphtha. This is in contrast to the April 2007 study wherein F-T naphtha represented a more significant portion of the final product, based on a desire to focus on gasoline production (via the upgrading of naphtha).

The production of additional diesel fuel in the current configuration requires that extra hydrogen (compared to the previous design) be supplied to the diesel hydroprocessing units in the product upgrading step. In addition, the wax hydrocracker model was redesigned to achieve higher diesel fuel yields. The diesel produced in the facility is ready for delivery to end-use customers, after the addition of the appropriate additives (additives are added at the distribution site). The naphtha produced has been stabilized and can either be shipped to a refinery for further upgrading to a commercial grade gasoline blendstock or sold as a chemical feedstock.

The plant achieves the goal of electrical power independence, in part, by recovering heat from the Fischer-Tropsch synthesis reactors to produce steam, which is then used in a steam turbine along with steam produced by syngas cooling and in the heat recovery steam generation unit. In the CO_2 sequestration case, the steam derived power represents 26 percent (29 percent in the CO_2 vent case) of the electrical power generated in the CTL facility with the remaining 74 percent (71 percent in the CO_2 vent case) being produced by the combustion of light gases recovered from the reactor vapor overhead and the various product recovery and upgrading sections of the CTL facility in the combustion turbines.

The final product slate of the facility is nominally:

- 35,230 bbl/day of F-T diesel fuel
- 14,762 bbl/day of stabilized (heteroatom, olefinic, and aromatic content is reduced) F-T naphtha
- The sequestration case produces 427.2 MWe of electrical power, 422.5 MWe of which is used within the facility and 4.7 MWe of which is sold into the grid (1.1 percent of total power production at a credit of $60/MWh. The vent case produces 472.8 MWe of electrical power, 375.7 MWe of which is used within the facility and 97.1 MWe of which is sold into the grid (20.5 percent of total power production) at a credit of $60/MWh.

- The sequestration case captures 26,405 tons/day of CO_2 (2,200,423 lb/hr) and compresses it to approximately 2,215 psia for pipeline transport from the facility to a geologic formation 100 km (62 miles) away. The vent case vents 25,569 tons/day of CO_2 (2,200,424 lb/hr) from the capture systems.

3 System Description

The CTL plant design utilized in this report represents the culmination of "lessons learned" over (a) the course of a number of years studying CTL facilities, (b) shifting environmental and performance concerns, and (c) numerous sensitivity analyses to ascertain optimal process performance.

A simplified process flow diagram of the major unit processes is provided in Exhibit 3-1 in order to provide an overview of the CTL plant configuration. The CO_2 vent case differs only in that it does not include CO_2 compression, water gas shift of the fuel gas, or CO_2 capture from the fuel gas.

Exhibit 3-1 Coal-to-liquids process flow diagram (red items only in sequestration case)

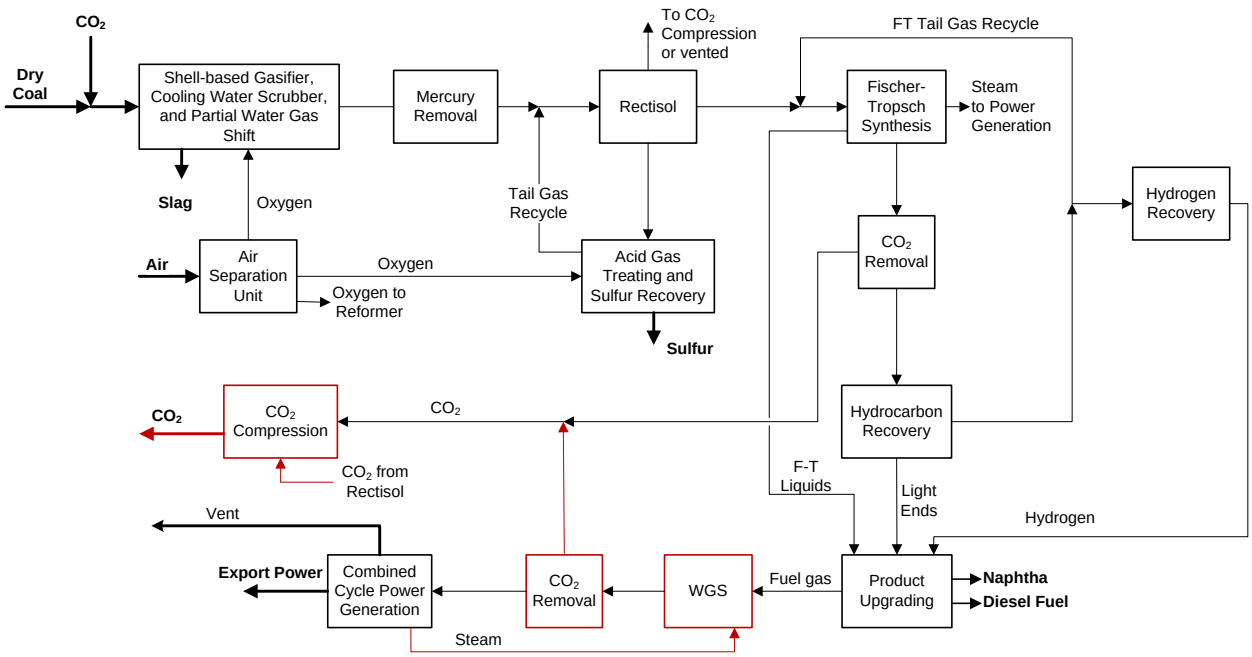

Source: NETL

Synthesis gas (syngas) is produced in a dry-feed Shell type gasifier. In order for the syngas to be usable in an F-T synthesis reactor, it must be cleaned and treated. The major equipment used to clean the syngas consists of a water-wash scrubber for particulate removal (which also has the added benefit of removing some of the mercury), an activated carbon bed for mercury removal, a WGS reactor[2], a dual-stage Rectisol® acid gas removal (AGR) system using a refrigerated methanol solution for sulfur and CO_2 removal[3]. A Claus plant is used to produce elemental sulfur from the sulfur-containing gases captured in the AGR system.

[2] Only a portion of the syngas is passed through the WGS reactor. The amount of syngas shifted is controlled to obtain an overall H_2:CO molar ratio between 1:1 and 1.1:1, as required for the F-T process.

[3] CO_2 is removed to reduce the volume of syngas, and therefore equipment sizes and capital expenditures. H_2S and COS are removed in order to protect the F-T catalyst.

The clean syngas is then mixed with tail gas recycle from the hydrogen recovery unit and fed to the low-temperature, slurry-phase, iron-based, F-T synthesis reactor, which converts the syngas to saturated hydrocarbons. The majority of the hydrocarbon products (those with a carbon chain length greater than four) are upgraded in the hydrocracking and hydrotreating units (Product Upgrading in the flow diagram) to produce F-T diesel (70 percent by volume) and F-T naphtha (30 percent by volume). The tail gas from the F-T unit, which includes unconverted CO and H_2, short chain hydrocarbons, and CO_2 is processed in an amine unit for CO_2 removal. This prevents the buildup of CO_2 in the recycle loop and reduces CO_2 emissions from the facility (in the scenario where captured CO_2 is sequestered). A portion of the tail gas is then directly recycled to the F-T reactor for maximum conversion of carbon to fuels, while the remainder is sent to: (a) a combustion turbine and subsequent heat recovery steam generator (HRSG), (b) direct fired heaters for coal drying, and (c) direct fired heaters for process heating needs.

The sequestration and vent cases differ in that:

1) In the sequestration case the CO_2 streams from the syngas capture system (Rectisol®), F-T tail gas capture system (amine), and F-T fuel gas capture system (amine) are combined and compressed, transported, and sequestered in a geologic formation.
2) In the vent case, there is no compression, transportation, or sequestration. The CO_2 is still captured in the syngas capture system and F-T tail gas capture system but not in the F-T fuel gas capture system. The CO_2 produced from the two capture systems is vented into the atmosphere.

The steam produced by the recovery of heat in the F-T synthesis reactor, along with the steam produced in the HRSG, is utilized in a steam turbine to produce power.

The combined output of the combustion and steam turbines is within 10 percent of total plant electricity requirement for the CO_2 capture case.

Individual process components are described in greater detail in the following sections.

3.1 Synthesis Gas Production

Exhibit 3-2 provides a simplified block flow diagram of the gasification and syngas cleanup sections. The primary differences between the CO_2 vent and sequestration cases are that: (a) CO_2 is captured in the CO_2 vent case, but it is not compressed, but instead vented, (b) the CO_2 vent case does not have water gas shift of the fuel gas or an amine CO_2 capture system for the fuel gas, and (c) the absence of these fuel gas treatment systems and CO_2 compression results in a lower auxiliary power requirement, as well as lower cooling water requirement for the facility, therefore, the amount of power exported increases and the amount of water withdrawal decreases. These differences are shown in the performance summaries provided in Exhibit 4-1 and Exhibit 4-2.

Exhibit 3-2 Block flow diagram of the gasification, syngas shift, and acid gas removal area (sequestration only systems shown in red)

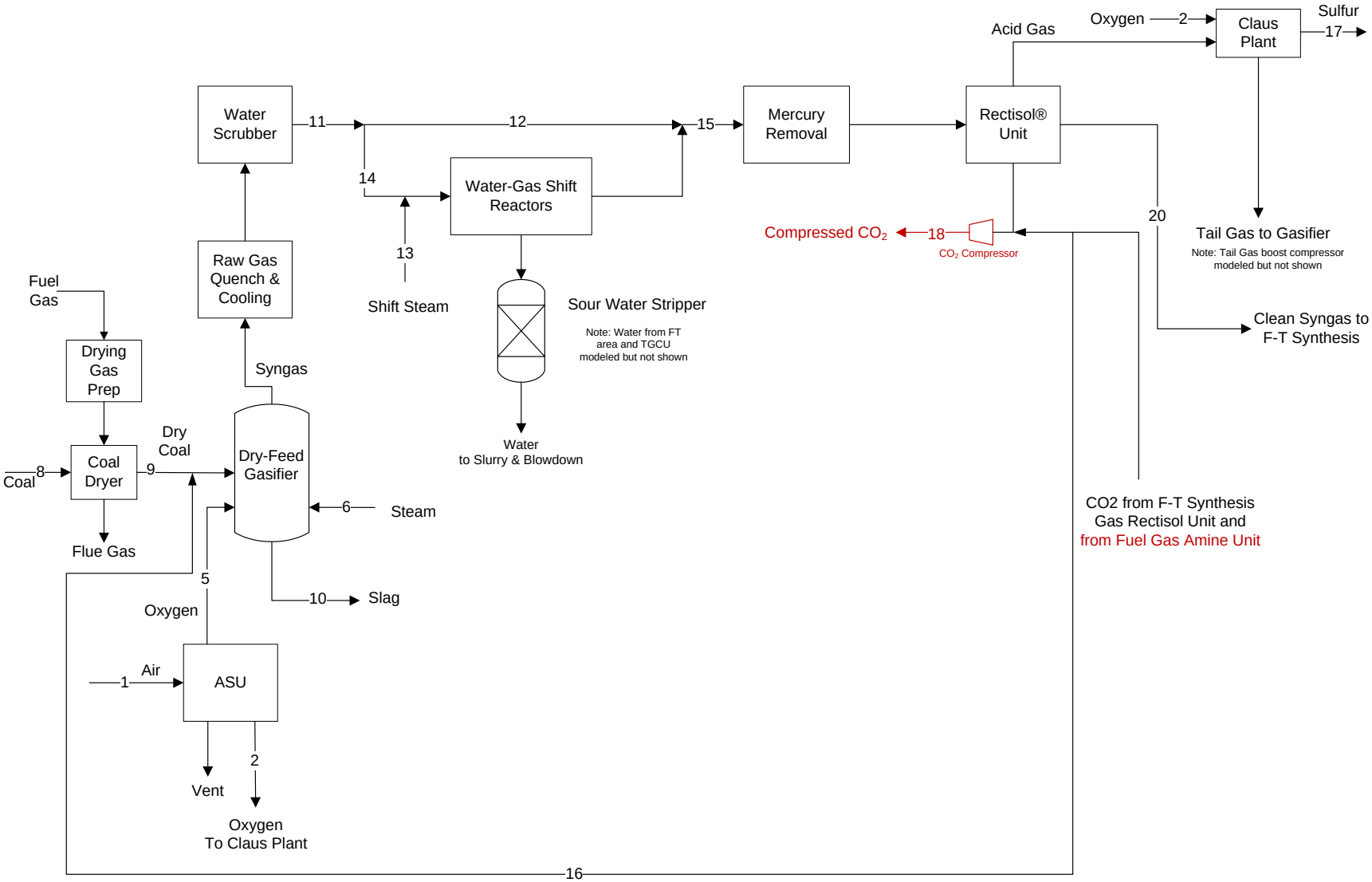

Source: NETL

Exhibit 3-3 Stream table for the gasification, syngas shift, and acid gas removal area – CO_2 sequestration case

	1	2	5	6	8	9	10	11	12
V-L Mole Fraction									
Ar	0.0092	0.0318	0.0318	0.0000	0.0000	0.0000	0.0000	0.0067	0.0067
CH_4	0.0000	0.0000	0.0000	0.0000	0.0000	0.0000	0.0000	0.0002	0.0002
CO	0.0000	0.0000	0.0000	0.0000	0.0000	0.0000	0.0000	0.4256	0.4256
CO_2	0.0003	0.0000	0.0000	0.0000	0.0000	0.0000	0.0000	0.0190	0.0190
COS	0.0000	0.0000	0.0000	0.0000	0.0000	0.0000	0.0000	0.0005	0.0005
H_2	0.0000	0.0000	0.0000	0.0000	0.0000	0.0000	0.0000	0.2034	0.2034
H_2O	0.0099	0.0000	0.0000	1.0000	0.0000	1.0000	0.0000	0.3320	0.3320
HCl	0.0000	0.0000	0.0000	0.0000	0.0000	0.0000	0.0000	0.0002	0.0002
H_2S	0.0000	0.0000	0.0000	0.0000	0.0000	0.0000	0.0000	0.0057	0.0057
N_2	0.7732	0.0178	0.0178	0.0000	0.0000	0.0000	0.0000	0.0057	0.0057
NH_3	0.0000	0.0000	0.0000	0.0000	0.0000	0.0000	0.0000	0.0010	0.0010
O_2	0.2074	0.9504	0.9504	0.0000	0.0000	0.0000	0.0000	0.0000	0.0000
SO_2	0.0000	0.0000	0.0000	0.0000	0.0000	0.0000	0.0000	0.0000	0.0000
Total	1.0000	1.0000	1.0000	1.0000	0.0000	1.0000	0.0000	1.0000	1.0000
V-L Flowrate (lb_{mol}/hr)	210,973	845	40,525	9,376	0	6,298	0	218,718	185,910
V-L Flowrate (lb/hr)	1,522,014	27,189	1,304,136	168,908	0	113,459	0	4,336,854	3,686,326
Solids Flowrate (lb/hr)	0	0	0	0	1,750,518	1,637,058	175,324	0	0
Temperature (°F)	59	90	90	650	59	220	2,600	389	389
Pressure (psia)	14.70	125.00	125.00	740.00	14.70	14.70	615.00	575.00	575.00
Enthalpy (Btu/lb)[A]	30.23	26.67	26.67	3,063.97	---	14,149.18	---	1,043.28	1,043.28
Density (lb/ft^3)	0.1	0.7	0.7	1.3	---	0.0	---	1.3	1.3
V-L Molecular Weight	28.857	32.181	32.181	18.015	---	18.015	---	19.829	19.829
	A - Reference conditions are 32.02 F & 0.089 PSIA								

Exhibit 3-3 Stream table for the gasification, syngas shift, and acid gas removal area – CO_2 sequestration case (continued)

	13	14	15	16	17	18	19	20	35
V-L Mole Fraction									
Ar	0.0000	0.0067	0.0063	0.0000	0.0000	0.0000	0.0000	0.0105	0.0000
CH_4	0.0000	0.0002	0.0002	0.0000	0.0000	0.0000	0.0000	0.0003	0.4394
CO	0.0000	0.4256	0.3410	0.0000	0.0000	0.0000	0.0000	0.5602	0.0512
CO_2	0.0000	0.0190	0.0764	1.0000	0.0000	1.0000	1.0000	0.0093	0.0008
COS	0.0000	0.0005	0.0004	0.0000	0.0000	0.0000	0.0000	0.0000	0.0000
H_2	0.0000	0.2034	0.2495	0.0000	0.0000	0.0000	0.0000	0.4101	0.2001
H_2O	1.0000	0.3320	0.3142	0.0000	0.0000	0.0000	0.0000	0.0000	0.0029
HCl	0.0000	0.0002	0.0002	0.0000	0.0000	0.0000	0.0000	0.0000	0.0000
H_2S	0.0000	0.0057	0.0054	0.0000	0.0000	0.0000	0.0000	0.0000	0.0000
N_2	0.0000	0.0057	0.0054	0.0000	0.0000	0.0000	0.0000	0.0096	0.3053
NH_3	0.0000	0.0010	0.0010	0.0000	0.0000	0.0000	0.0000	0.0000	0.0003
O_2	0.0000	0.0000	0.0000	0.0000	0.0000	0.0000	0.0000	0.0000	0.0000
SO_2	0.0000	0.0000	0.0000	0.0000	0.0000	0.0000	0.0000	0.0000	0.0000
Total	1.0000	1.0000	1.0000	1.0000	0.0000	1.0000	1.0000	1.0000	1.0000
V-L Flowrate (lb_{mol}/hr)	14,243	32,808	232,961	4,970	0	49,998	16,600	141,810	7,002
V-L Flowrate (lb/hr)	256,596	650,528	4,593,450	218,718	0	2,200,423	730,542	2,498,405	122,766
Solids Flowrate (lb/hr)	0	0	0	0	43,875	0	0	0	0
Temperature (°F)	550	389	401	80	359	121	60	95	385
Pressure (psia)	800.00	575.00	560.00	749.50	17.30	2,214.70	135.00	520.00	460.00
Enthalpy (Btu/lb)[A]	2,918.18	1,043.28	1,026.52	-43.00	---	-169.59	3.27	51.50	378.62
Density (lb/ft^3)	1.6	1.3	1.2	8.7	329.1	41.7	1.1	1.5	0.9
V-L Molecular Weight	18.015	19.829	19.718	44.010	---	44.010	44.010	17.618	17.533

Exhibit 3-4 Stream table for the gasification, syngas shift, and acid gas removal area – CO_2 vent case

	1	2	3	6	8	9	10	11	12
V-L Mole Fraction									
Ar	0.0092	0.0318	0.0318	0.0000	0.0000	0.0000	0.0000	0.0067	0.0067
CH_4	0.0000	0.0000	0.0000	0.0000	0.0000	0.0000	0.0000	0.0002	0.0002
CO	0.0000	0.0000	0.0000	0.0000	0.0000	0.0000	0.0000	0.4256	0.4256
CO_2	0.0003	0.0000	0.0000	0.0000	0.0000	0.0000	0.0000	0.0190	0.0190
COS	0.0000	0.0000	0.0000	0.0000	0.0000	0.0000	0.0000	0.0005	0.0005
H_2	0.0000	0.0000	0.0000	0.0000	0.0000	0.0000	0.0000	0.2034	0.2034
H_2O	0.0099	0.0000	0.0000	1.0000	0.0000	1.0000	0.0000	0.3320	0.3320
HCl	0.0000	0.0000	0.0000	0.0000	0.0000	0.0000	0.0000	0.0002	0.0002
H_2S	0.0000	0.0000	0.0000	0.0000	0.0000	0.0000	0.0000	0.0057	0.0057
N_2	0.7732	0.0178	0.0178	0.0000	0.0000	0.0000	0.0000	0.0057	0.0057
NH_3	0.0000	0.0000	0.0000	0.0000	0.0000	0.0000	0.0000	0.0010	0.0010
O_2	0.2074	0.9504	0.9504	0.0000	0.0000	0.0000	0.0000	0.0000	0.0000
SO_2	0.0000	0.0000	0.0000	0.0000	0.0000	0.0000	0.0000	0.0000	0.0000
Total	1.0000	1.0000	1.0000	1.0000	0.0000	1.0000	0.0000	1.0000	1.0000
V-L Flowrate (lb_{mol}/hr)	52,743	211	494	2,344	0	1,574	0	54,679	46,478
V-L Flowrate (lb/hr)	1,522,010	6,797	15,900	42,227	0	28,365	0	1,084,214	921,581
Solids Flowrate (lb/hr)	0	0	0	0	437,629	409,265	43,831	0	0
Temperature (°F)	59	90	90	650	59	220	2,600	389	389
Pressure (psia)	14.7	125.0	125.0	740.0	14.7	14.7	615.0	575.0	575.0
Enthalpy (Btu/lb)[A]	13.0	11.5	11.5	1,317.3	---	6,083.1	---	448.5	448.5
Density (lb/ft^3)	0.076	0.687	0.687	1.257	---	0.037	---	1.277	1.277

A - Reference conditions are 32.02 F & 0.089 PSIA

Exhibit 3-4 Stream table for the gasification, syngas shift, and acid gas removal area – CO_2 vent case (continued)

	13	14	15	16	17	18	20	35
V-L Mole Fraction								
Ar	0.0000	0.0067	0.0063	0.0000	0.0000	0.0000	0.0105	0.0000
CH_4	0.0000	0.0002	0.0002	0.0000	0.0000	0.0000	0.0003	0.5918
CO	0.0000	0.4256	0.3410	0.0000	0.0000	0.0000	0.5602	0.0396
CO_2	0.0000	0.0190	0.0764	1.0000	0.0000	1.0000	0.0093	0.0026
COS	0.0000	0.0005	0.0004	0.0000	0.0000	0.0000	0.0000	0.0000
H_2	0.0000	0.2034	0.2495	0.0000	0.0000	0.0000	0.4101	0.0479
H_2O	1.0000	0.3320	0.3142	0.0000	0.0000	0.0000	0.0000	0.0011
HCl	0.0000	0.0002	0.0002	0.0000	0.0000	0.0000	0.0000	0.0000
H_2S	0.0000	0.0057	0.0054	0.0000	0.0000	0.0000	0.0000	0.0000
N_2	0.0000	0.0057	0.0054	0.0000	0.0000	0.0000	0.0096	0.3171
NH_3	0.0000	0.0010	0.0010	0.0000	0.0000	0.0000	0.0000	0.0000
O_2	0.0000	0.0000	0.0000	0.0000	0.0000	0.0000	0.0000	0.0000
SO_2	0.0000	0.0000	0.0000	0.0000	0.0000	0.0000	0.0000	0.0000
Total	1.0000	1.0000	1.0000	1.0000	0.0000	1.0000	1.0000	1.0000
V-L Flowrate (lb_{mol}/hr)	3,561	8,202	58,240	1,242	0	12,104	35,453	1,714
V-L Flowrate (lb/hr)	64,149	162,632	1,148,363	54,680	0	532,696	624,601	33,801
Solids Flowrate (lb/hr)	0	0	0	0	10,969	0	0	0
Temperature (°F)	550	389	401	80	359	121	95	385
Pressure (psia)	800.0	575.0	560.0	749.5	17.3	2,214.7	520.0	460.0
Enthalpy (Btu/lb)[A]	1,254.6	448.5	441.3	-18.5	---	-72.9	22.1	148.4
Density (lb/ft^3)	1.597	1.277	1.217	9	329.101	41.660	1.528	0.999

3.1.1 Air Separation Unit

The facility is equipped with a total of four air separation units (ASU) for the eight gasifier trains. Each ASU, composed of two cold boxes, is designed to produce a nominal output of 15,182 tonne/day (16,739 tpd) of 95 mole percent O_2. This O_2 is used in the gasifier, F-T plant, and Claus plant. The ASU is designed with two production trains. The air compressors are powered by an electric motor. There is no direct integration between the ASU and the rest of the facility. A process schematic of a typical ASU is shown in Exhibit 3-6

The air feed to the air separation unit is supplied from stand-alone air compressors. The filtered air is compressed in centrifugal compressors, with intercooling between each stage. The air stream is cooled and then fed to an adsorbent-based pre-purifier system.

Air from the stand-alone compressor is cooled and fed to an adsorbent-based pre-purifier system. The adsorbent removes water, CO_2, and C_4+ saturated hydrocarbons in the air. After passing through the adsorption beds, the air is filtered with a dust filter to remove any adsorbent fines that may be present. Downstream of the dust filter a small stream of air is withdrawn to supply the instrument air requirements of the ASU.

Regeneration of the adsorbent in the pre-purifiers is accomplished by passing a hot nitrogen stream through the off-stream bed(s) in a direction countercurrent to the normal airflow. The nitrogen is heated against extraction steam (1.7 MPa [250 psia]) in a shell and tube heat exchanger. The regeneration nitrogen drives off the adsorbed contaminants. Following regeneration, the heated bed is cooled to near normal operating temperature by passing a cool nitrogen stream through the adsorbent beds. The bed is re-pressurized with air and placed on stream so that the current on-stream bed(s) can be regenerated.

The air from the pre-purifier is then split into three streams. About 70 percent of the air is fed directly to the cold box. About 25 to 30 percent of the air is compressed in an air booster compressor. This boosted air is then cooled in an aftercooler against cooling water before it is fed to the cold box. About 5 percent of the air is fed to a turbine-driven, single-stage, centrifugal booster compressor. This stream is cooled in a shell and tube aftercooler against cooling water before it is fed to the cold box.

All three air feeds are cooled in the cold box to cryogenic temperatures against returning product oxygen and nitrogen streams in plate-and-fin heat exchangers. The large air stream is fed directly to the first distillation column to begin the separation process. The second air stream is liquefied against boiling liquid oxygen before it is fed to the distillation columns. The third, small air stream is fed to the cryogenic expander to produce refrigeration to sustain the cryogenic separation process. The work produced from the expansion is used to power the turbine booster compressor.

Inside the cold box the air is separated into oxygen and nitrogen products. The oxygen product is withdrawn from the distillation columns as a liquid and is pressurized in a cryogenic pump. The pressurized liquid oxygen is then vaporized against the high-pressure air feed before being warmed to ambient temperature. The gaseous oxygen exits the cold box and is split into two streams. Essentially all of the gaseous oxygen is fed to the centrifugal compressor with intercooling between each stage of compression. The compressed oxygen is then fed to the gasification unit. The second oxygen stream is fed to the Claus plant, the autothermal reformers in the F-T area, and to the autothermal reformer in the fuel gas cleanup area.

Nitrogen is produced from the cold box at two pressure levels. Low-pressure nitrogen is split into two streams. The majority of the low-pressure nitrogen is compressed and fed to the gas turbine as diluent nitrogen. A small portion of the nitrogen is used as the regeneration gas for the pre-purifiers and recombined with the diluent nitrogen. A high-pressure nitrogen stream is also produced from the cold box and is further compressed before it is also supplied to the gas turbine.

Exhibit 3-5 Typical ASU process schematic

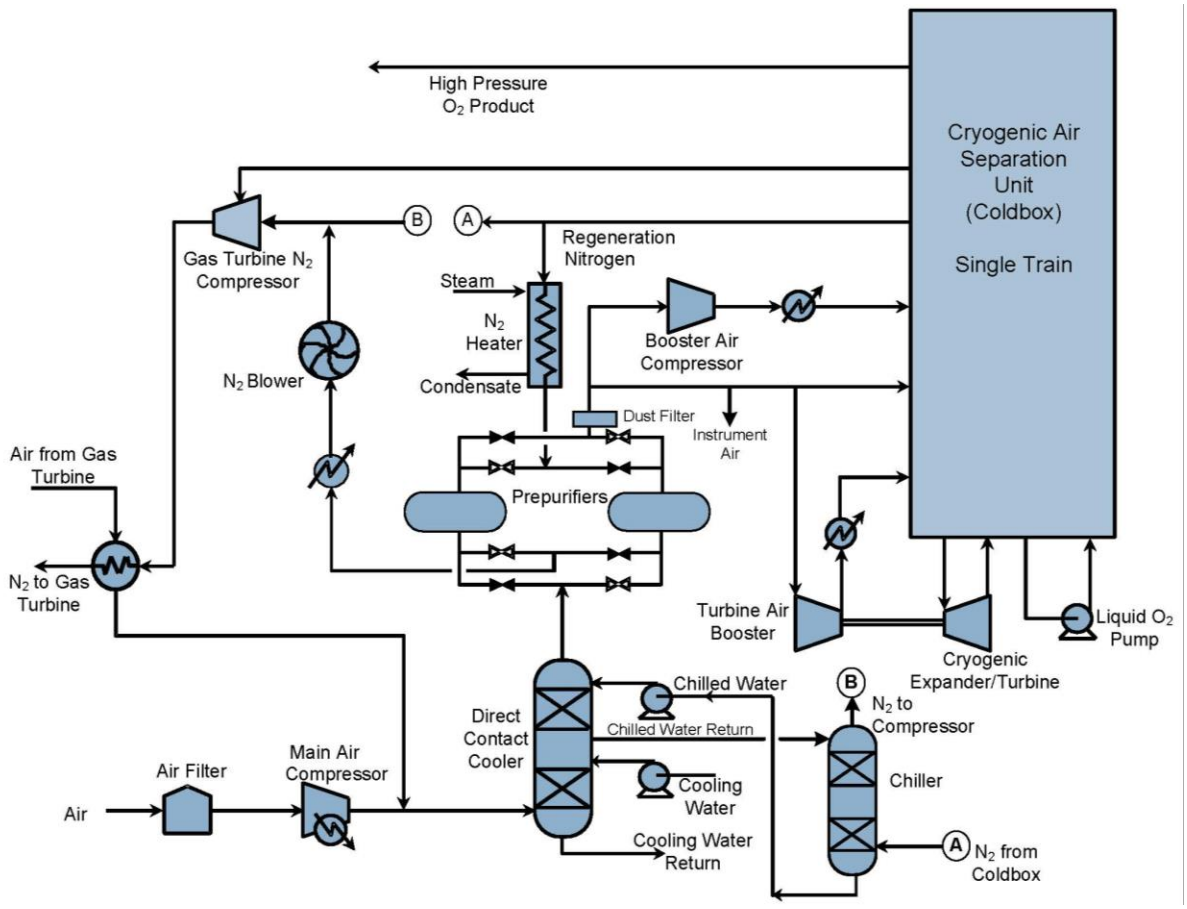

Source: NETL

3.1.2 Coal Drying

The Shell-based gasification process uses a dry-feed system that is sensitive to the coal moisture content. Coal moisture consists of two parts: surface moisture and inherent moisture. For coal to flow smoothly through the lock hoppers, the surface moisture must be removed. The Illinois No. 6 coal used in this study contains approximately eleven weight-percent total moisture on an as-received basis. It was assumed that the coal must be dried to approximately 5 percent moisture to allow for smooth flow through the dry feed system.

The coal is simultaneously crushed and dried in the coal mill and then delivered to a surge hopper, which has approximately a two-hour capacity. The drying medium is provided by combining the off-gas from the Claus plant and a slipstream of F-T tail gas and passing them

through an incinerator. The incinerator flue gas, with an oxygen content of 6 volume percent, is used to dry the coal in the mill.

The coal is drawn from the surge hoppers and fed through a pressurized lock hopper system to a dense phase pneumatic conveyor, which uses CO_2 recovered from the syngas to convey the coal to the gasifiers.

The equipment in the coal drying and grinding system is fabricated of materials appropriate for the abrasive environment present in the system. The tanks and agitators are rubber lined. The pumps are either rubber-lined or hardened metal to minimize erosion. Piping is fabricated of high-density polyethylene (HDPE).

3.1.3 Gasifier

The gasifier is a dry-feed, single-stage, entrained-flow gasification system similar to a Shell Global Solutions commercial design. The gasifier system includes high-temperature gas cooling via syngas recycle, slag handling, and solid waste handling equipment. The gasifier also includes a refractory-lined water wall that is protected by molten slag that solidifies on the cooled walls.

The heat recovery from the gasifier is broken into two stages. The first stage 1) recovers high-temperature heat in each gasifier train via a gasifier jacket, which cools the syngas by maintaining the reaction temperature at 1,427°C (2,600°F). The second stage 2) reduces the temperature of the product gas from the gasifier to 1,082°C (1,980°F) by mixing in recycled gas, then to 399 °C (750°F) with water quench, which provides a portion of the water required for the WGS reaction.

The gasification system consists of four gasifier trains with two gasifiers in each train, along with one spare gasifier, for a total of nine dry-feed gasifiers. The spare gasifier is included to maintain overall plant availability of 90 percent. The gasification plant section was modeled as four copies of a single gasification train to enable direct comparison with baseline study case models of similar size, and the results were combined to generate the required quantity of syngas for the F-T facility.

These gasifiers, operate at 4.2 MPa (615 psia) and process a total of 19,056 tonne/day (21,006 tpd) of as-received coal for both the CO_2 sequestration and vent cases. Coal reacts with oxygen and steam at a temperature of 1,427 °C (2,600 °F) to produce principally H_2 and CO, with little CO_2 or CH_4 formed.

3.1.4 Particulate Removal

After passing through the water quench, the syngas passes through a cyclone and a raw gas candle filter system where a majority of the fine particles are removed and returned to the gasifier with the coal fuel. The filter consists of an array of ceramic candle elements in a pressure vessel. Fines produced by the gasification system are recirculated to extinction. The ash that is not carried out with the gas forms slag and runs down the interior walls, exiting the gasifier in liquid form. The slag is solidified in a quench tank for disposal. Lockhoppers reduce the pressure of the solids from 4.2 MPa to atmospheric pressure 1.0 MPa (615 to 14.7 psia).

Following the water quench and particulate removal, the syngas is cooled to 232°C (450°F) before going to the syngas scrubber by vaporizing high-pressure boiler feed water (BFW) and

pre-heating intermediate-pressure BFW. The syngas scrubber removes residual particulate matter further downstream.

3.1.5 Gas Scrubbing

The "sour" gas leaving the particulate filter system consists mostly of H_2, CO, CO_2, water vapor, N_2, and smaller quantities of CH_4, COS, H_2S, and NH_3.

The quench scrubber washes the syngas in a counter-current flow in two packed beds. The syngas leaves the scrubber saturated at a temperature of 193 °C (379 ºF). The quench scrubber removes essentially all of the entrained particles, principally unconverted carbon, slag, and metals. The bottoms from the scrubber are sent to the slag removal and handling system for processing.

Sour water from the syngas scrubber is stripped of sour gas and treated for recycle or discharge. The sour water stripper removes chlorides, NH_3, and other impurities from the waste water stream of the scrubber. The sour gas stripper consists of a sour drum that accumulates sour water from the gas scrubber and condensate from synthesis gas coolers. Sour water from the drum flows to the sour water stripper, which consists of a packed column with a steam-heated reboiler. Sour gas is stripped from the liquid at about 250 °F and sent to the sulfur recovery unit. Remaining water is sent to wastewater treatment.

3.1.6 Water Gas Shift through Acid Gas Removal

The required operating parameters of the F-T synthesis reactor are satisfied with the WGS and AGR units. These parameters (H_2:CO, H_2O:CO, and stoichiometric number [S#]) are described below and reported in Exhibit 3-6. The metrics apply to the total F-T reactor feed, which includes the clean syngas, steam and recycle from the hydrocarbon recovery process.

Exhibit 3-6 F-T reactor syngas operating parameters for both cases

Parameter	Value
S# [1]	0.98
H_2:CO [2]	1.02
H_2O:CO [3]	1.80

[1]Synthesis gas metric at the inlet of the F-T reactor
[2]Ratio of hydrogen to carbon monoxide at the inlet of the F-T reactor
[3]Ratio of moisture to carbon monoxide at the inlet to the WGS units

The H_2:CO ratio is simply calculated by dividing the moles of hydrogen by the moles of carbon monoxide in the syngas stream. Due to the ability of the iron-based F-T catalyst to promote water gas shift in situ enabling CO_2 to be a source of carbon, the F-T reactor requires a relatively low H_2/CO molar ratio of 1:1 to 1.1:1.

The H_2O:CO ratio was based on common practice and assures an atmosphere conducive to shifting and provides a suitable moisture content at the WGS exit to prevent coking.

The S# metric is calculated using the following equation:

$$S\# = {(H_2 - CO_2)}/{(CO + CO_2)}$$

In systems without significant water gas shift activity, the S# is targeted to values near 2 [14]. Since the iron-based catalyst promotes the WGS reaction, the S# is less than 2 in the study cases.

The process descriptions are provided in the following subsections.

3.1.6.1 Water Gas Shift

In order to achieve the desired H_2:CO ratio of 1:1 at the reactor inlet, about 15 percent of the syngas is routed through two WGS reactors in series. The WGS reactors convert most of the CO to H_2 and CO_2 by reacting the CO with water over a fixed bed of catalyst via the water gas shift reaction shown below.

$$Water\ Gas\ Shift: CO + H_2O \leftrightarrow CO_2 + H_2$$

Steam is injected prior to the first stage of WGS to adjust the H_2O/CO molar ratio.

As water gas shift is a net exothermic process, the heat of reaction must be managed between stages. The exiting temperature of the first stage is 470 °C (878 ºF), which is an increase over the inlet temperature of 219 °C (426 ºF). The temperature is reduced by utilizing a heat exchanger that reduces the temperature to 204 °C (400 ºF) by producing steam.

The temperature again rises to 254 °C (489 ºF) in the second stage of WGS. This heat is recovered (the temperature is reduced to 230 °C (446 ºF)) by preheating the syngas exiting the gas scrubber (described in Section 3.1.5) to 198 °C (389 °F) from 193 °C (379 °F) prior to entering the first stage of WGS.

The two stages of WGS result in a 95.6 percent overall conversion of CO to CO_2. The WGS catalyst also serves to hydrolyze COS thus eliminating the need for a separate COS hydrolysis reactor.

The shifted syngas rejoins the bypassed syngas and enters the low temperature cooling system, where it is cooled to 35 °C (95 °F) prior to the mercury removal beds.

3.1.6.2 Mercury Removal

Mercury is removed by packed beds of sulfur-impregnated carbon similar to what has been used at the Eastman Chemical gasification plant in Kingsport, Tennessee. A bed of sulfur-impregnated carbon, with approximately a 20-second superficial gas residence time, can achieve 95 percent mercury removal in addition to removal of other volatile heavy metals, such as arsenic. The spent carbon sorbent is discarded as a hazardous waste with a disposal cost of $1,300/ton.

3.1.6.3 Acid Gas Removal

A feature of this plant configuration is that COS, H_2S, and CO_2 are removed from the syngas within the same process system, the Rectisol® unit. The purpose of the Rectisol® unit, which utilizes a refrigerated methanol solvent, is to preferentially remove H_2S and COS as a product stream, and then to remove the remaining H_2S and a majority of the CO_2. This is achieved in the

dual-stage Rectisol® unit. Since the Rectisol® system removes COS, the COS hydrolysis pre-treatment step is unnecessary and has been eliminated.

The use of methanol prevents formation of ice and hydrates at the low operating temperatures. Cool, dry, particulate-free syngas enters the first absorber unit at approximately 100 ºF and 520 psia. The low operating temperatures are beneficial, because at these temperatures the solvent carrying capacity for both CO_2 and H_2S becomes very high. (1) These features allow for high separations of both CO_2 and H_2S.

The low temperature operation can lead to complicated flow schemes, as well as elevated plant costs. (1) Therefore, Rectisol generally finds application only in relatively difficult gas treating conditions where extremely high purities are required.

Shown below in Exhibit 3-7 is an example Rectisol process employed as the Texaco refinery, in Wilmington, CA. (2) The unit was built by Linde A.G. of Munich and is part of a hydrogen production train where vacuum residual oil is gasified to provide hydrogen for the refinery.

Exhibit 3-7 Rectisol process flow diagram example

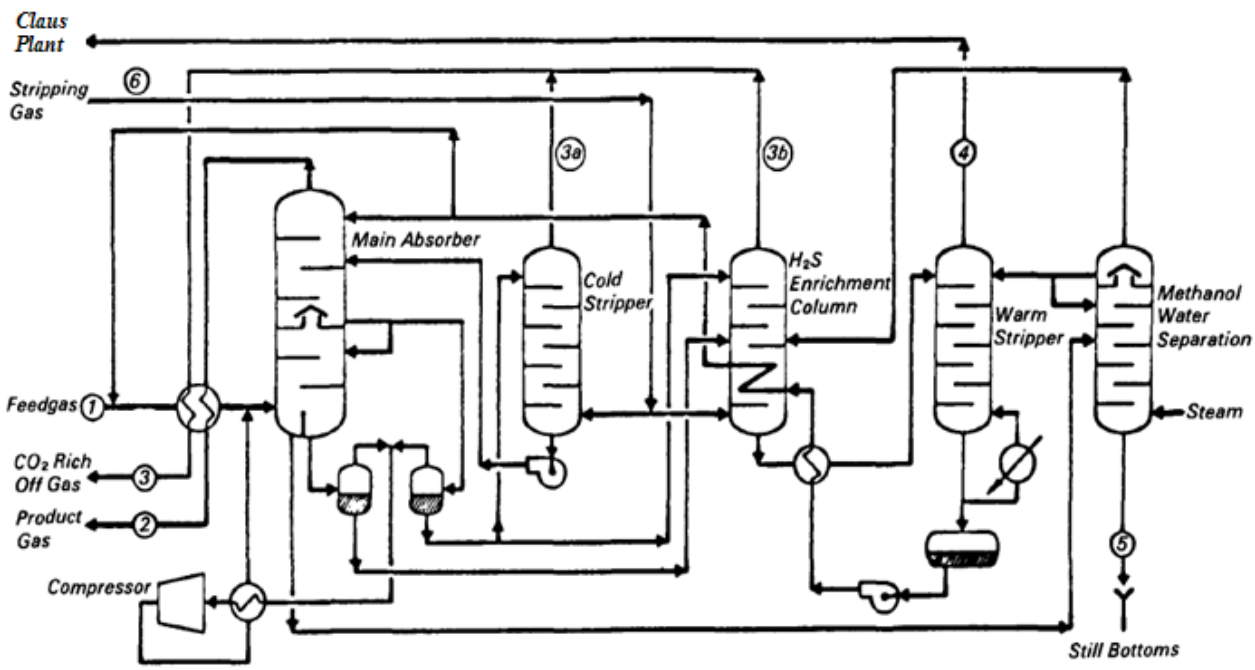

Source: EPA

The feedgas (stream 1) is first cooled against the separation products, and is sent to the main absorber where H_2S and CO_2 are removed in the bottom section of the tower. The sulfur-free gas is washed in the top section of the main absorber to remove remaining CO_2 (stream 2). The bottom product from the main absorber contains all H_2S, some CO_2, and some H_2. This stream is flashed to recover H_2 from the loaded methanol solvent. The H_2 is pressurized and recycled to the feedgas inlet. The bottoms product of the flash is sent to the H_2S enrichment column to remove additional CO_2 to achieve the required H_2S concentration. This is accomplished with the stripping gas (stream 6), which is nitrogen obtained from the oxygen plant. The CO_2 rich off gas (stream 3b) is combined with the off gas from the cold stripper (stream 3a) and is the product CO_2 stream (stream 3), which is vented to the atmosphere or compressed (see Section 3.1.7).

The bottom of the H_2S enrichment column is sent to the warm stripper where the absorbed H_2S and CO_2 are stripped and sent to the Claus plant (stream 4).

The stream of CO_2-loaded methanol, leaving the CO_2-absorption section of the main absorber (middle section) after H_2 flashing, is stripped with nitrogen in the cold stripper, and the overhead (stream 3a) is combined with stream 3b, as discussed prior. The bottoms of the cold stripper, partially stripped, cold methanol, is sent back to the main absorber. The methanol/water mixture condensed from the feed gas is separated in the methanol water separation still to produce an overhead methanol stream, which is recycled, and a bottoms waste water stream (stream 5).

The amine CO_2 capture systems associated with the F-T tail gas and F-T fuel gas are discussed in Section 3.2.

3.1.7 CO_2 Compression and Dehydration

CO_2 is generated at three pressure levels from the AGR process. In the CO_2 vent case, this CO_2 is vented to the atmosphere, while in the sequestration case the low pressure (LP) stream is compressed from 0.15 MPa (22 psia) to 1.1 MPa (160 psia) and then combined with the medium pressure (MP) stream. The high pressure (HP) stream is combined between compressor stages at 2.1 MPa (300 psia). The combined stream is compressed from 2.1 MPa (300 psia) to a supercritical condition at 15.3 MPa (2,215 psia) using a multiple-stage, intercooled compressor. During compression, the CO_2 stream is dehydrated to a dewpoint of -40 ºC (-40 °F) with triethyleneglycol. The raw CO_2 stream from the Rectisol® process contains over 99 percent CO_2 with the balance being primarily nitrogen and hydrogen, for modeling purposes it was treated as 100 percent CO_2. The pure CO_2 is transported via pipeline to a geologic sequestration site 100 km (62 miles).

3.1.8 Claus Unit

Acid gas from each Rectisol® stripper unit is routed to the associated Claus plant. The Claus plant partially oxidizes the H_2S in the acid gas to elemental sulfur. The rate of sulfur recovery is approximately 43,875 lb/hr in both cases. This rate represents ~100 percent recovery.

Acid gas from the Rectisol® unit is preheated to 450 °F. A portion of the acid gas, along with all of the sour water stripper overhead vapor and oxidant, is fed to the Claus furnace. In the furnace, H_2S is oxidized to SO_2 using 95 percent oxygen. A furnace temperature greater than 2,450 °F must be maintained in order to thermally decompose all of the NH_3 present in the sour gas stream.

Three preheaters and three sulfur converters are used to obtain a per-pass H_2S conversion efficiency of approximately 97.8 percent. In the furnace waste heat boiler, 650 psia steam is generated. This steam is used to satisfy all Claus process preheating and reheating requirements as well as to produce excess steam that is sent to the medium-pressure steam header. The sulfur condensers produce 50 psig steam that goes to the low-pressure steam header.

3.1.9 Zinc Oxide

While the Rectisol® system is capable of reducing the sulfur levels to between 0.1 and 1.0 ppm, which are sufficiently low for an F-T process using iron-based catalyst, the long term on-specification operation of the Rectisol® unit cannot be guaranteed.

Therefore, the treated, clean syngas is fed to a packed bed of solid zinc oxide (ZnO) to remove any residual heteroatom content (i.e., sulfur) that makes it through the syngas treatment processes. The zinc oxide is a final guard bed to protect the Fischer-Tropsch synthesis catalyst and is capable of reducing the sulfur content of the sweet gas to the F-T feed to less than 1 ppb.

The cost of the addition of the required two ZnO beds to the process is insignificant compared to the total plant cost. If the sulfur polishing step were not there during an upset in the Rectisol® unit, the entire amount of F-T catalyst in the reactors might be poisoned and would have to be replaced. The cost of the shutdown and lost production would far outweigh the cost of the sulfur polishing unit. The addition of this unit is insurance in the same manner that spares are installed for almost all liquid pumps.

3.2 Fischer-Tropsch Synthesis

The cleaned syngas is preheated and mixed with steam and recycled tail gas and fed to the slurry-bed F-T hydrocarbon synthesis reactor (which operates at around 475°F and 300 psia). The coal-derived syngas has a hydrogen-to-carbon monoxide (H_2:CO) ratio of 0.73, prior to tail gas recycle (1.02 post tail gas recycle), which is converted in the F-T reactor to straight chain olefinic and aliphatic hydrocarbons with a H:C ratio of approximately 2.1. Use of an iron-based F-T catalyst (as opposed to cobalt-based) is preferred when utilizing low H_2:CO ratio syngas as the iron-based catalyst also promotes WGS activity, which allows a portion of the WGS reaction to occur in the reactor. This additional WGS activity within the reactor produces a liquid product with a H:C ratio that is higher than the H_2:CO ratio of the inlet syngas.

The F-T reactor consists of two parallel first-stage slurry beds that feed a common second-stage slurry bed. The conceptual design of the F-T synthesis section is represented in Exhibit 3-8. Unconverted synthesis gas is cooled between the first and second stages to 65.6^{o}C (150°F) to remove water and a hot hydrocarbon condensate (which is sent to product recovery), and then re-heated prior to entering the second stage. Each stage accomplishes approximately 61 percent conversion of carbon monoxide (hydrogen is in excess) leading to a per-pass conversion of 85 percent of carbon monoxide. There is no direct recycle of unconverted synthesis gas back into the second-stage reactor (the implementation of the recycle loop is discussed in a subsequent section).

Reactor temperature is modulated by removing tremendous heat released by the Fischer-Tropsch process through generation of 24.8 bar (360 psig) steam through bayonet tubes suspended from an internal double tubesheet. The reactors operate at 21-22 bar (305-319 psia) and nominally 249°C (480°F)[4].

Synthesis gas is introduced into the reactors through a cylindrical gas distributor and bubbles up through the slurry phase. Fischer-Tropsch wax and catalyst make up the slurry phase, into which the synthesis gas dissolves, contacts the catalyst, and is oligomerized, producing more Fischer-Tropsch liquids. Streams of liquid wax are withdrawn from the reactors with a slurry valve, which accomplishes the majority of the catalyst-wax separation.

[4] The outlet temperature is set by the target that was yield in the systems model, with this choice being at the edge of the operating window referred to as low temperature Fischer-Tropsch synthesis.

Exhibit 3-8 Simplified representation of the F-T synthesis section

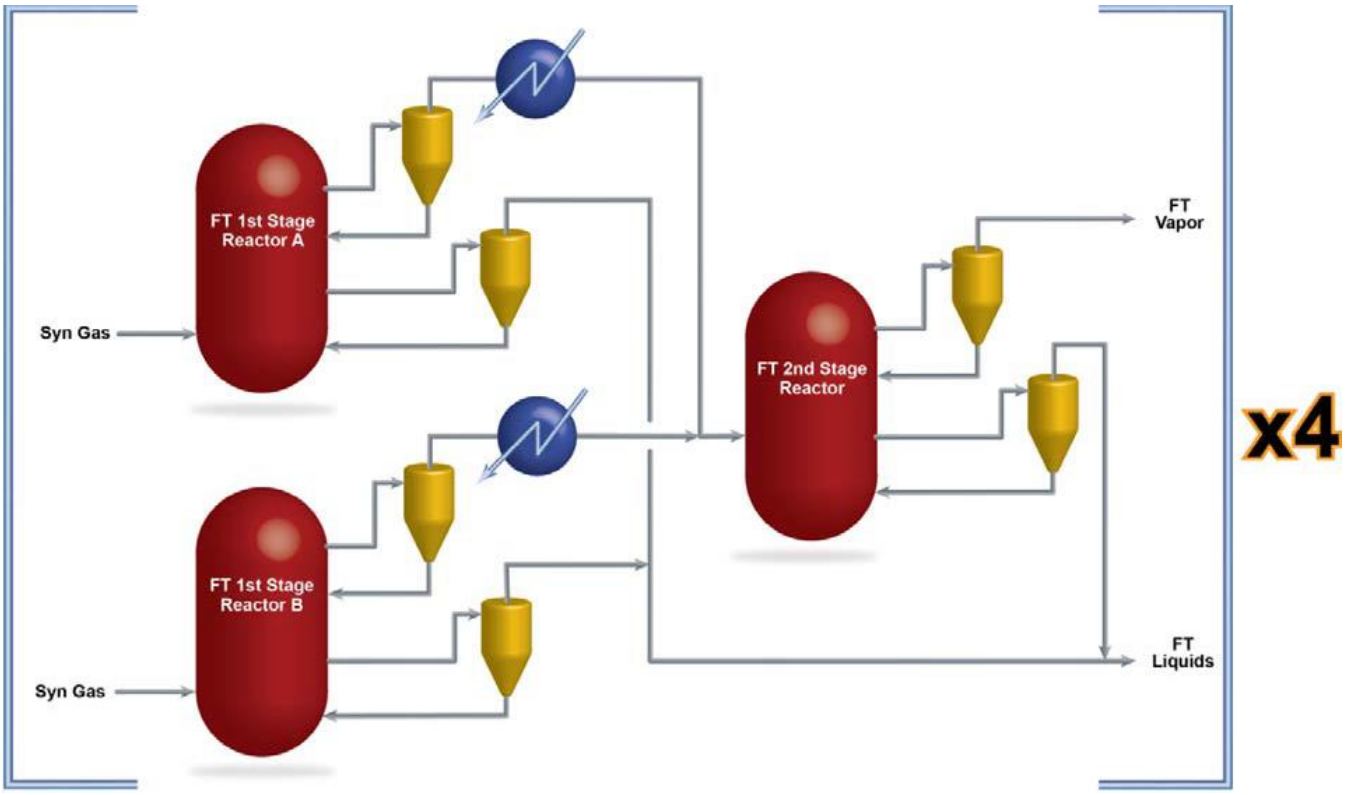

Source: NETL

Vapor is removed from the overhead of the first-stage reactor passing through a cyclone to prevent liquid carryover. The vapor is cooled and sent to a three-phase separator. The hot condensate (light liquid hydrocarbons) is recovered for further use. The water is sent to treatment, and the remaining vapors are reheated and sent to the second-stage reactor.

A cyclone removes entrained catalyst particles from the vapor stream leaving the top of the F-T reactor before being sent to a condenser for recovery of condensable hydrocarbon products, which are then processed in hydrotreaters in the product upgrading section of the plant.

The remaining vapor stream – containing unreacted syngas, inerts, and light hydrocarbons (predominantly methane, ethane, and propane) – is processed in an amine unit for CO_2 removal to prevent CO_2 build up in the recycle loop and reduce equipment sizes. In the sequestration case, the captured CO_2 is sent to the gasification section for compression with CO_2 from the Rectisol® unit. In the vent case it is merely vented to the atmosphere. A portion of the vapor stream is compressed for recycle to the F-T reactor while the rest of the gas is sent through a hydrogen recovery process to separate out hydrogen that is used for hydrotreating the liquids. The remaining gas is used as fuel gas.

The wax products are sent to hydrocyclones to accomplish the remaining catalyst-wax separation. Subsequently, the resulting wax stream is degassed with the resulting vapor cooled to remove additional condensate that is sent to product recovery and the residual vapor combined with the tail gas for recycling. The liquid wax is sent to wax clarifying and fed to the hydrocarbon recovery section.

The catalyst that is separated from the bulk of the wax streams is recycled back to the Fischer-Tropsch reactors. To maintain performance, a portion of the catalyst inventory of the reactors is removed for disposal and replaced. Catalyst replacement rates are influenced by loss of catalyst functional lifetime (activity and selectivity) and attrition losses. A composite lifetime (mechanical and functional) of the catalyst in this system analysis is 0.78 years, meaning 0.015 percent of catalyst inventory is replaced per hour.

The catalyst-free liquid leaving the filter system is reduced in pressure and flashed. The vapor stream is further cooled to 100 °F and flashed. The vapor stream from the second flash is used as fuel for the gas turbine and the liquid from both flash drums is sent to the feed drum of the product fractionators, along with the condensate recovered from the overhead vapor streams.

Exhibit 3-9 provides simplified block flow diagram of the F-T, product recovery, and product upgrading areas. Exhibit 3-10 and Exhibit 3-11 show the temperature, pressure, flow, and compositions of the process streams in the F-T area at the design coal feed rate for the CO_2 sequestration and CO_2 vent cases, respectively.

Exhibit 3-9 Block flow diagram for the F-T synthesis and product upgrading area

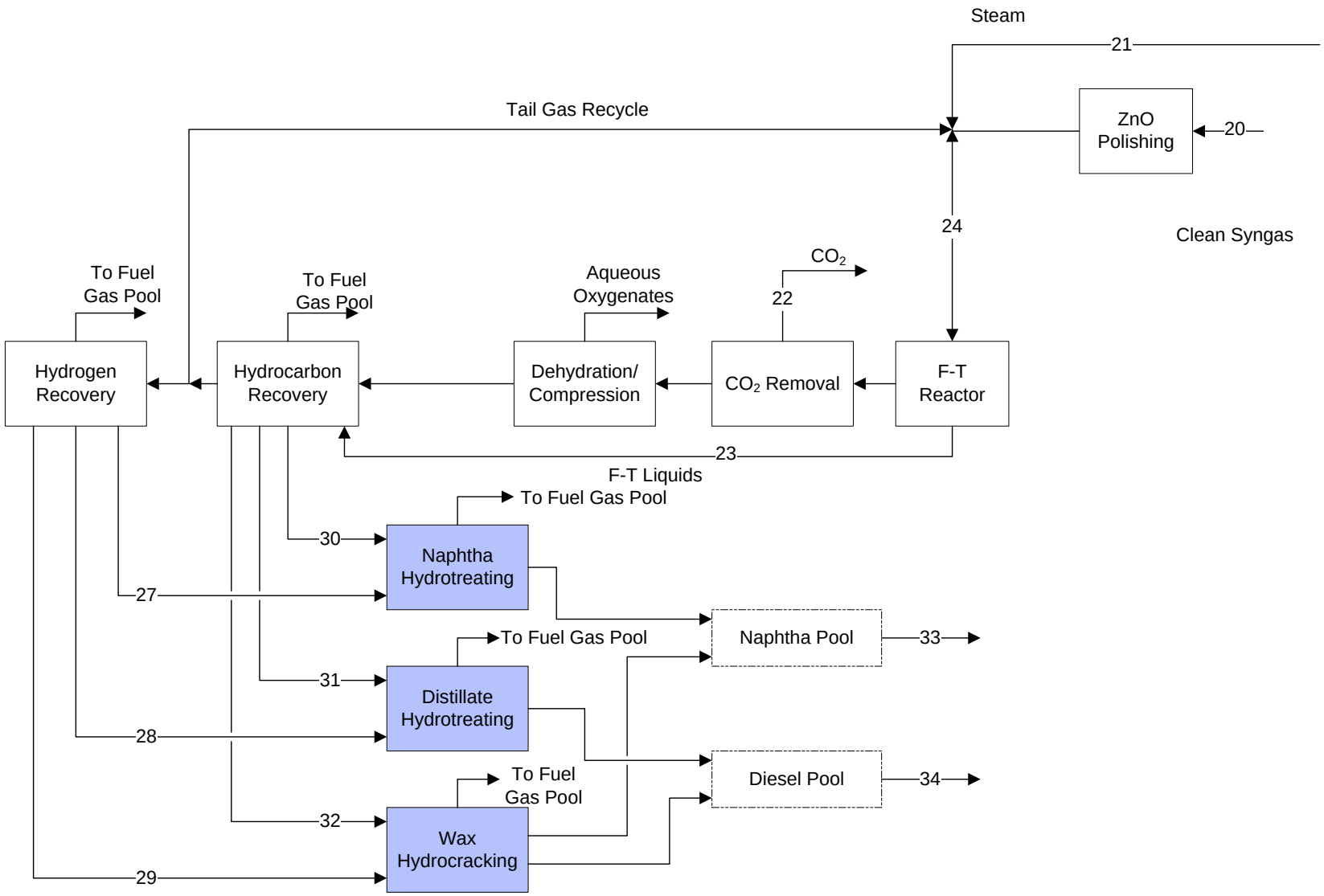

Source: NETL

Exhibit 3-10 Stream table for the F-T synthesis and product upgrading area – CO_2 sequestration

	20	21	22	23	24	27	28	29	30	31	32	33	34
V-L Mole Fraction													
H2	0.4102	0.0000	0.0000	0.0013	0.4102	1.0000	1.0000	1.0000	0.0000	0.0000	0.0000	0.0000	0.0000
N2	0.0200	0.0000	0.0000	0.0017	0.0962	0.0000	0.0000	0.0000	0.0000	0.0000	0.0000	0.0000	0.0000
O2	0.0000	0.0000	0.0000	0.0000	0.0000	0.0000	0.0000	0.0000	0.0000	0.0000	0.0000	0.0000	0.0000
H2S	0.0000	0.0000	0.0000	0.0000	0.0000	0.0000	0.0000	0.0000	0.0000	0.0000	0.0000	0.0000	0.0000
CO	0.5602	0.0000	0.0000	0.0002	0.4031	0.0000	0.0000	0.0000	0.0000	0.0000	0.0000	0.0000	0.0000
CO2	0.0093	0.0000	1.0000	0.0116	0.0069	0.0000	0.0000	0.0000	0.0000	0.0000	0.0000	0.0000	0.0000
H2O	0.0000	1.0000	0.0000	0.0507	0.0431	0.0000	0.0000	0.0000	0.0000	0.0000	0.0000	0.0000	0.0000
NH3	0.0000	0.0000	0.0000	0.0000	0.0000	0.0000	0.0000	0.0000	0.0000	0.0000	0.0000	0.0000	0.0000
HCL	0.0000	0.0000	0.0000	0.0000	0.0000	0.0000	0.0000	0.0000	0.0000	0.0000	0.0000	0.0000	0.0000
C	0.0000	0.0000	0.0000	0.0000	0.0000	0.0000	0.0000	0.0000	0.0000	0.0000	0.0000	0.0000	0.0000
HCN	0.0000	0.0000	0.0000	0.0000	0.0000	0.0000	0.0000	0.0000	0.0000	0.0000	0.0000	0.0000	0.0000
SULFUR	0.0000	0.0000	0.0000	0.0000	0.0000	0.0000	0.0000	0.0000	0.0000	0.0000	0.0000	0.0000	0.0000
COS	0.0000	0.0000	0.0000	0.0000	0.0000	0.0000	0.0000	0.0000	0.0000	0.0000	0.0000	0.0000	0.0000
CH4	0.0003	0.0000	0.0000	0.0012	0.0284	0.0000	0.0000	0.0000	0.0000	0.0000	0.0000	0.0000	0.0000
C2H4	0.0000	0.0000	0.0000	0.0009	0.0103	0.0000	0.0000	0.0000	0.0000	0.0000	0.0000	0.0000	0.0000
C2H6	0.0000	0.0000	0.0000	0.0002	0.0017	0.0000	0.0000	0.0000	0.0000	0.0000	0.0000	0.0000	0.0000
C3H6	0.0000	0.0000	0.0000	0.0003	0.0001	0.0000	0.0000	0.0000	0.0000	0.0000	0.0000	0.0000	0.0000
C3H8	0.0000	0.0000	0.0000	0.0001	0.0000	0.0000	0.0000	0.0000	0.0000	0.0000	0.0000	0.0000	0.0000
IC4H8	0.0000	0.0000	0.0000	0.0000	0.0000	0.0000	0.0000	0.0000	0.0000	0.0000	0.0000	0.0000	0.0000
NC4H8	0.0000	0.0000	0.0000	0.0004	0.0000	0.0000	0.0000	0.0000	0.0000	0.0000	0.0000	0.0000	0.0000
IC4H10	0.0000	0.0000	0.0000	0.0000	0.0000	0.0000	0.0000	0.0000	0.0000	0.0000	0.0000	0.0000	0.0000
NC4H10	0.0000	0.0000	0.0000	0.0001	0.0000	0.0000	0.0000	0.0000	0.0000	0.0000	0.0000	0.0000	0.0000
C5H10	0.0000	0.0000	0.0000	0.0005	0.0000	0.0000	0.0000	0.0000	0.0006	0.0000	0.0000	0.1431	0.0000
NC5H12	0.0000	0.0000	0.0000	0.0002	0.0000	0.0000	0.0000	0.0000	0.0418	0.0000	0.0000	0.0808	0.0000
IC5H12	0.0000	0.0000	0.0000	0.0000	0.0000	0.0000	0.0000	0.0000	0.0000	0.0000	0.0000	0.0424	0.0000
C6H12	0.0000	0.0000	0.0000	0.0008	0.0000	0.0000	0.0000	0.0000	0.1819	0.0000	0.0000	0.0000	0.0000
NC6H14	0.0000	0.0000	0.0000	0.0003	0.0000	0.0000	0.0000	0.0000	0.0546	0.0000	0.0000	0.1739	0.0000
IC6H14	0.0000	0.0000	0.0000	0.0000	0.0000	0.0000	0.0000	0.0000	0.0061	0.0000	0.0000	0.0651	0.0000
C7H14	0.0000	0.0000	0.0000	0.0011	0.0000	0.0000	0.0000	0.0000	0.1415	0.0000	0.0000	0.0000	0.0000
C7H16	0.0000	0.0000	0.0000	0.0005	0.0000	0.0000	0.0000	0.0000	0.0606	0.0000	0.0000	0.0000	0.0000
C8H16	0.0000	0.0000	0.0000	0.0014	0.0000	0.0000	0.0000	0.0000	0.1181	0.0000	0.0000	0.0000	0.0000
C8H18	0.0000	0.0000	0.0000	0.0006	0.0000	0.0000	0.0000	0.0000	0.0506	0.0000	0.0000	0.0000	0.0000
C9H18	0.0000	0.0000	0.0000	0.0018	0.0000	0.0000	0.0000	0.0000	0.0986	0.0000	0.0000	0.0000	0.0000
C9H20	0.0000	0.0000	0.0000	0.0008	0.0000	0.0000	0.0000	0.0000	0.0422	0.0000	0.0000	0.0000	0.0000

Exhibit 3-10 Stream table for the F-T synthesis and product upgrading area – CO_2 sequestration (continued)

	20	21	22	23	24	27	28	29	30	31	32	33	34
V-L Mole Fraction													
C10H20	0.0000	0.0000	0.0000	0.0022	0.0000	0.0000	0.0000	0.0000	0.0822	0.0000	0.0000	0.0000	0.0000
C10H22	0.0000	0.0000	0.0000	0.0010	0.0000	0.0000	0.0000	0.0000	0.0352	0.0000	0.0000	0.0000	0.0000
C11H22	0.0000	0.0000	0.0000	0.0027	0.0000	0.0000	0.0000	0.0000	0.0000	0.1206	0.0000	0.0000	0.0000
C11H24	0.0000	0.0000	0.0000	0.0012	0.0000	0.0000	0.0000	0.0000	0.0000	0.0517	0.0000	0.0000	0.0000
C12H24	0.0000	0.0000	0.0000	0.0033	0.0000	0.0000	0.0000	0.0000	0.0000	0.1006	0.0000	0.0000	0.0000
C12H26	0.0000	0.0000	0.0000	0.0015	0.0000	0.0000	0.0000	0.0000	0.0000	0.0431	0.0000	0.0000	0.0000
C13H26	0.0000	0.0000	0.0000	0.0039	0.0000	0.0000	0.0000	0.0000	0.0000	0.0840	0.0000	0.0000	0.0000
C13H28	0.0000	0.0000	0.0000	0.0018	0.0000	0.0000	0.0000	0.0000	0.0000	0.0360	0.0000	0.0000	0.0000
C14H28	0.0000	0.0000	0.0000	0.0046	0.0000	0.0000	0.0000	0.0000	0.0000	0.0700	0.0000	0.0000	0.0000
C14H30	0.0000	0.0000	0.0000	0.0021	0.0000	0.0000	0.0000	0.0000	0.0000	0.0300	0.0000	0.0000	0.0000
C15H30	0.0000	0.0000	0.0000	0.0054	0.0000	0.0000	0.0000	0.0000	0.0000	0.0584	0.0000	0.0000	0.0000
C15H32	0.0000	0.0000	0.0000	0.0024	0.0000	0.0000	0.0000	0.0000	0.0000	0.0250	0.0000	0.0000	0.0000
C16H32	0.0000	0.0000	0.0000	0.0061	0.0000	0.0000	0.0000	0.0000	0.0000	0.0487	0.0000	0.0000	0.0000
C16H34	0.0000	0.0000	0.0000	0.0026	0.0000	0.0000	0.0000	0.0000	0.0000	0.0209	0.0000	0.0000	0.0000
C17H34	0.0000	0.0000	0.0000	0.0066	0.0000	0.0000	0.0000	0.0000	0.0000	0.0407	0.0000	0.0000	0.0000
C17H36	0.0000	0.0000	0.0000	0.0030	0.0000	0.0000	0.0000	0.0000	0.0000	0.0174	0.0000	0.0000	0.0000
C18H36	0.0000	0.0000	0.0000	0.0074	0.0000	0.0000	0.0000	0.0000	0.0000	0.0339	0.0000	0.0000	0.0000
C18H38	0.0000	0.0000	0.0000	0.0032	0.0000	0.0000	0.0000	0.0000	0.0000	0.0145	0.0000	0.0000	0.0000
C19H38	0.0000	0.0000	0.0000	0.0077	0.0000	0.0000	0.0000	0.0000	0.0000	0.0283	0.0000	0.0000	0.0000
C19H40	0.0000	0.0000	0.0000	0.0035	0.0000	0.0000	0.0000	0.0000	0.0000	0.0121	0.0000	0.0000	0.0000
C20H40	0.0000	0.0000	0.0000	0.0082	0.0000	0.0000	0.0000	0.0000	0.0000	0.0000	0.0230	0.0000	0.0000
C20H42	0.0000	0.0000	0.0000	0.0037	0.0000	0.0000	0.0000	0.0000	0.0000	0.0000	0.0099	0.0000	0.0000
ALKYLATE	0.0000	0.0000	0.0000	0.0000	0.0000	0.0000	0.0000	0.0000	0.0000	0.0000	0.0000	0.0000	0.0000
ISOMERAT	0.0000	0.0000	0.0000	0.0000	0.0000	0.0000	0.0000	0.0000	0.0000	0.0000	0.0000	0.0000	0.0000
REFORMAT	0.0000	0.0000	0.0000	0.0000	0.0000	0.0000	0.0000	0.0000	0.0000	0.0000	0.0000	0.0000	0.0000
C7-300HC	0.0000	0.0000	0.0000	0.0000	0.0000	0.0000	0.0000	0.0000	0.0000	0.0000	0.0000	0.1006	0.0000
3-350HC	0.0000	0.0000	0.0000	0.0000	0.0000	0.0000	0.0000	0.0000	0.0000	0.0000	0.0000	0.0265	0.0000
350-5HC	0.0000	0.0000	0.0000	0.0000	0.0000	0.0000	0.0000	0.0000	0.0000	0.0000	0.0000	0.0000	0.7298
500+HC	0.0000	0.0000	0.0000	0.0000	0.0000	0.0000	0.0000	0.0000	0.0000	0.0000	0.0000	0.0000	0.0557
C7-300HT	0.0000	0.0000	0.0000	0.0000	0.0000	0.0000	0.0000	0.0000	0.0000	0.0000	0.0000	0.2981	0.0000
3-350HT	0.0000	0.0000	0.0000	0.0000	0.0000	0.0000	0.0000	0.0000	0.0000	0.0000	0.0000	0.0695	0.0000
350-5HT	0.0000	0.0000	0.0000	0.0000	0.0000	0.0000	0.0000	0.0000	0.0000	0.0000	0.0000	0.0000	0.1475
500+HT	0.0000	0.0000	0.0000	0.0000	0.0000	0.0000	0.0000	0.0000	0.0000	0.0000	0.0000	0.0000	0.0670

Exhibit 3-10 Stream table for the F-T synthesis and product upgrading area – CO_2 sequestration (continued)

	20	21	22	23	24	27	28	29	30	31	32	33	34
V-L Mole Fraction													
OXVAP	0.0000	0.0000	0.0000	0.0001	0.0000	0.0000	0.0000	0.0000	0.0000	0.0000	0.0000	0.0000	0.0000
OXHC	0.0000	0.0000	0.0000	0.0018	0.0000	0.0000	0.0000	0.0000	0.0860	0.1638	0.0000	0.0000	0.0000
OXH2O	0.0000	0.0000	0.0000	0.0005	0.0000	0.0000	0.0000	0.0000	0.0000	0.0000	0.0000	0.0000	0.0000
C5N	0.0000	0.0000	0.0000	0.0000	0.0000	0.0000	0.0000	0.0000	0.0000	0.0000	0.0000	0.0000	0.0000
C6N	0.0000	0.0000	0.0000	0.0000	0.0000	0.0000	0.0000	0.0000	0.0000	0.0000	0.0000	0.0000	0.0000
C7N	0.0000	0.0000	0.0000	0.0000	0.0000	0.0000	0.0000	0.0000	0.0000	0.0000	0.0000	0.0000	0.0000
C8N	0.0000	0.0000	0.0000	0.0000	0.0000	0.0000	0.0000	0.0000	0.0000	0.0000	0.0000	0.0000	0.0000
C9N	0.0000	0.0000	0.0000	0.0000	0.0000	0.0000	0.0000	0.0000	0.0000	0.0000	0.0000	0.0000	0.0000
C10N	0.0000	0.0000	0.0000	0.0000	0.0000	0.0000	0.0000	0.0000	0.0000	0.0000	0.0000	0.0000	0.0000
C6A	0.0000	0.0000	0.0000	0.0000	0.0000	0.0000	0.0000	0.0000	0.0000	0.0000	0.0000	0.0000	0.0000
C7A	0.0000	0.0000	0.0000	0.0000	0.0000	0.0000	0.0000	0.0000	0.0000	0.0000	0.0000	0.0000	0.0000
C8A	0.0000	0.0000	0.0000	0.0000	0.0000	0.0000	0.0000	0.0000	0.0000	0.0000	0.0000	0.0000	0.0000
C9A	0.0000	0.0000	0.0000	0.0000	0.0000	0.0000	0.0000	0.0000	0.0000	0.0000	0.0000	0.0000	0.0000
C10AP	0.0000	0.0000	0.0000	0.0000	0.0000	0.0000	0.0000	0.0000	0.0000	0.0000	0.0000	0.0000	0.0000
C21OP	0.0000	0.0000	0.0000	0.0136	0.0000	0.0000	0.0000	0.0000	0.0000	0.0000	0.0317	0.0000	0.0000
C22OP	0.0000	0.0000	0.0000	0.0153	0.0000	0.0000	0.0000	0.0000	0.0000	0.0000	0.0305	0.0000	0.0000
C23OP	0.0000	0.0000	0.0000	0.0168	0.0000	0.0000	0.0000	0.0000	0.0000	0.0000	0.0294	0.0000	0.0000
C24OP	0.0000	0.0000	0.0000	0.0179	0.0000	0.0000	0.0000	0.0000	0.0000	0.0000	0.0284	0.0000	0.0000
C25OP	0.0000	0.0000	0.0000	0.0188	0.0000	0.0000	0.0000	0.0000	0.0000	0.0000	0.0274	0.0000	0.0000
C26OP	0.0000	0.0000	0.0000	0.0193	0.0000	0.0000	0.0000	0.0000	0.0000	0.0000	0.0264	0.0000	0.0000
C27OP	0.0000	0.0000	0.0000	0.0197	0.0000	0.0000	0.0000	0.0000	0.0000	0.0000	0.0254	0.0000	0.0000
C28OP	0.0000	0.0000	0.0000	0.0197	0.0000	0.0000	0.0000	0.0000	0.0000	0.0000	0.0245	0.0000	0.0000
C29OP	0.0000	0.0000	0.0000	0.0197	0.0000	0.0000	0.0000	0.0000	0.0000	0.0000	0.0236	0.0000	0.0000
C30WAX	0.0000	0.0000	0.0000	0.6758	0.0000	0.0000	0.0000	0.0000	0.0000	0.0000	0.7198	0.0000	0.0000
Total	1.0000	1.0000	1.0000	1.0000		1.0000	1.0000	1.0000	1.0000	1.0000	1.0000	1.0000	1.0000
V-L Molecular Weight	17.493	18.015	44.010	608.035	16.693	2.016	2.016	2.016	104.506	177.165	658.868	105.664	194.681
V-L Flowrate (lb_{mol}/hr)	142,824	8,775	36,786	572	203,707	709	362	2,756	921	524	537	1,398	2,013
V-L Flowrate (lb/hr)	2,498,396	158,087	1,618,962	347,549	3,400,404	1,429	731	5,556	96,211	92,751	353,896	147,699	391,830
Solids Flowrate (lb/hr)	0	0	0	0	0	0	0	0	0	0	0	0	0
Temperature (°F)	600	240	100	487	343	100	100	100	100	100	100	112	255
Pressure (psia)	360.0	325.0	265.0	75.0	325.0	600.0	600.0	120.0	50.0	50.0	50.0	40.0	20.0
Density (lb/ft^3)	0.549	56.237	2.138	37.600	0.625	0.197	0.197	0.040	43.116	46.189	51.458	41.122	42.502

Exhibit 3-11 Stream table for the F-T synthesis and product upgrading area – CO_2 vent

	20	21	22	23	23	27	28	29	30	31	32	33	34
V-L Mole Fraction													
H2	0.4102	0.0000	0.0000	0.0013	0.4102	1.0000	1.0000	1.0000	0.0000	0.0000	0.0000	0.0000	0.0000
N2	0.0200	0.0000	0.0000	0.0017	0.0962	0.0000	0.0000	0.0000	0.0000	0.0000	0.0000	0.0000	0.0000
O2	0.0000	0.0000	0.0000	0.0000	0.0000	0.0000	0.0000	0.0000	0.0000	0.0000	0.0000	0.0000	0.0000
H2S	0.0000	0.0000	0.0000	0.0000	0.0000	0.0000	0.0000	0.0000	0.0000	0.0000	0.0000	0.0000	0.0000
CO	0.5602	0.0000	0.0000	0.0002	0.4031	0.0000	0.0000	0.0000	0.0000	0.0000	0.0000	0.0000	0.0000
CO2	0.0093	0.0000	1.0000	0.0116	0.0069	0.0000	0.0000	0.0000	0.0000	0.0000	0.0000	0.0000	0.0000
H2O	0.0000	1.0000	0.0000	0.0507	0.0431	0.0000	0.0000	0.0000	0.0000	0.0000	0.0000	0.0000	0.0000
NH3	0.0000	0.0000	0.0000	0.0000	0.0000	0.0000	0.0000	0.0000	0.0000	0.0000	0.0000	0.0000	0.0000
HCL	0.0000	0.0000	0.0000	0.0000	0.0000	0.0000	0.0000	0.0000	0.0000	0.0000	0.0000	0.0000	0.0000
C	0.0000	0.0000	0.0000	0.0000	0.0000	0.0000	0.0000	0.0000	0.0000	0.0000	0.0000	0.0000	0.0000
HCN	0.0000	0.0000	0.0000	0.0000	0.0000	0.0000	0.0000	0.0000	0.0000	0.0000	0.0000	0.0000	0.0000
SULFUR	0.0000	0.0000	0.0000	0.0000	0.0000	0.0000	0.0000	0.0000	0.0000	0.0000	0.0000	0.0000	0.0000
COS	0.0000	0.0000	0.0000	0.0000	0.0000	0.0000	0.0000	0.0000	0.0000	0.0000	0.0000	0.0000	0.0000
CH4	0.0003	0.0000	0.0000	0.0012	0.0284	0.0000	0.0000	0.0000	0.0000	0.0000	0.0000	0.0000	0.0000
C2H4	0.0000	0.0000	0.0000	0.0009	0.0103	0.0000	0.0000	0.0000	0.0000	0.0000	0.0000	0.0000	0.0000
C2H6	0.0000	0.0000	0.0000	0.0002	0.0017	0.0000	0.0000	0.0000	0.0000	0.0000	0.0000	0.0000	0.0000
C3H6	0.0000	0.0000	0.0000	0.0003	0.0001	0.0000	0.0000	0.0000	0.0000	0.0000	0.0000	0.0000	0.0000
C3H8	0.0000	0.0000	0.0000	0.0001	0.0000	0.0000	0.0000	0.0000	0.0000	0.0000	0.0000	0.0000	0.0000
IC4H8	0.0000	0.0000	0.0000	0.0000	0.0000	0.0000	0.0000	0.0000	0.0000	0.0000	0.0000	0.0000	0.0000
NC4H8	0.0000	0.0000	0.0000	0.0004	0.0000	0.0000	0.0000	0.0000	0.0000	0.0000	0.0000	0.0000	0.0000
IC4H10	0.0000	0.0000	0.0000	0.0000	0.0000	0.0000	0.0000	0.0000	0.0000	0.0000	0.0000	0.0000	0.0000
NC4H10	0.0000	0.0000	0.0000	0.0001	0.0000	0.0000	0.0000	0.0000	0.0000	0.0000	0.0000	0.0000	0.0000
C5H10	0.0000	0.0000	0.0000	0.0005	0.0000	0.0000	0.0000	0.0000	0.0006	0.0000	0.0000	0.1431	0.0000
NC5H12	0.0000	0.0000	0.0000	0.0002	0.0000	0.0000	0.0000	0.0000	0.0418	0.0000	0.0000	0.0808	0.0000
IC5H12	0.0000	0.0000	0.0000	0.0000	0.0000	0.0000	0.0000	0.0000	0.0000	0.0000	0.0000	0.0424	0.0000
C6H12	0.0000	0.0000	0.0000	0.0008	0.0000	0.0000	0.0000	0.0000	0.1819	0.0000	0.0000	0.0000	0.0000
NC6H14	0.0000	0.0000	0.0000	0.0003	0.0000	0.0000	0.0000	0.0000	0.0546	0.0000	0.0000	0.1739	0.0000
IC6H14	0.0000	0.0000	0.0000	0.0000	0.0000	0.0000	0.0000	0.0000	0.0061	0.0000	0.0000	0.0651	0.0000
C7H14	0.0000	0.0000	0.0000	0.0011	0.0000	0.0000	0.0000	0.0000	0.1415	0.0000	0.0000	0.0000	0.0000
C7H16	0.0000	0.0000	0.0000	0.0005	0.0000	0.0000	0.0000	0.0000	0.0606	0.0000	0.0000	0.0000	0.0000
C8H16	0.0000	0.0000	0.0000	0.0014	0.0000	0.0000	0.0000	0.0000	0.1181	0.0000	0.0000	0.0000	0.0000
C8H18	0.0000	0.0000	0.0000	0.0006	0.0000	0.0000	0.0000	0.0000	0.0506	0.0000	0.0000	0.0000	0.0000
C9H18	0.0000	0.0000	0.0000	0.0018	0.0000	0.0000	0.0000	0.0000	0.0986	0.0000	0.0000	0.0000	0.0000
C9H20	0.0000	0.0000	0.0000	0.0008	0.0000	0.0000	0.0000	0.0000	0.0422	0.0000	0.0000	0.0000	0.0000

Exhibit 3-11 Stream table for the F-T synthesis and product upgrading area – CO_2 vent (continued)

	20	21	22	23	23	27	28	29	30	31	32	33	34
V-L Mole Fraction													
C10H20	0.0000	0.0000	0.0000	0.0022	0.0000	0.0000	0.0000	0.0000	0.0822	0.0000	0.0000	0.0000	0.0000
C10H22	0.0000	0.0000	0.0000	0.0010	0.0000	0.0000	0.0000	0.0000	0.0352	0.0000	0.0000	0.0000	0.0000
C11H22	0.0000	0.0000	0.0000	0.0027	0.0000	0.0000	0.0000	0.0000	0.0000	0.1206	0.0000	0.0000	0.0000
C11H24	0.0000	0.0000	0.0000	0.0012	0.0000	0.0000	0.0000	0.0000	0.0000	0.0517	0.0000	0.0000	0.0000
C12H24	0.0000	0.0000	0.0000	0.0033	0.0000	0.0000	0.0000	0.0000	0.0000	0.1006	0.0000	0.0000	0.0000
C12H26	0.0000	0.0000	0.0000	0.0015	0.0000	0.0000	0.0000	0.0000	0.0000	0.0431	0.0000	0.0000	0.0000
C13H26	0.0000	0.0000	0.0000	0.0039	0.0000	0.0000	0.0000	0.0000	0.0000	0.0840	0.0000	0.0000	0.0000
C13H28	0.0000	0.0000	0.0000	0.0018	0.0000	0.0000	0.0000	0.0000	0.0000	0.0360	0.0000	0.0000	0.0000
C14H28	0.0000	0.0000	0.0000	0.0046	0.0000	0.0000	0.0000	0.0000	0.0000	0.0700	0.0000	0.0000	0.0000
C14H30	0.0000	0.0000	0.0000	0.0021	0.0000	0.0000	0.0000	0.0000	0.0000	0.0300	0.0000	0.0000	0.0000
C15H30	0.0000	0.0000	0.0000	0.0054	0.0000	0.0000	0.0000	0.0000	0.0000	0.0584	0.0000	0.0000	0.0000
C15H32	0.0000	0.0000	0.0000	0.0024	0.0000	0.0000	0.0000	0.0000	0.0000	0.0250	0.0000	0.0000	0.0000
C16H32	0.0000	0.0000	0.0000	0.0061	0.0000	0.0000	0.0000	0.0000	0.0000	0.0487	0.0000	0.0000	0.0000
C16H34	0.0000	0.0000	0.0000	0.0026	0.0000	0.0000	0.0000	0.0000	0.0000	0.0209	0.0000	0.0000	0.0000
C17H34	0.0000	0.0000	0.0000	0.0066	0.0000	0.0000	0.0000	0.0000	0.0000	0.0407	0.0000	0.0000	0.0000
C17H36	0.0000	0.0000	0.0000	0.0030	0.0000	0.0000	0.0000	0.0000	0.0000	0.0174	0.0000	0.0000	0.0000
C18H36	0.0000	0.0000	0.0000	0.0074	0.0000	0.0000	0.0000	0.0000	0.0000	0.0339	0.0000	0.0000	0.0000
C18H38	0.0000	0.0000	0.0000	0.0032	0.0000	0.0000	0.0000	0.0000	0.0000	0.0145	0.0000	0.0000	0.0000
C19H38	0.0000	0.0000	0.0000	0.0077	0.0000	0.0000	0.0000	0.0000	0.0000	0.0283	0.0000	0.0000	0.0000
C19H40	0.0000	0.0000	0.0000	0.0035	0.0000	0.0000	0.0000	0.0000	0.0000	0.0121	0.0000	0.0000	0.0000
C20H40	0.0000	0.0000	0.0000	0.0082	0.0000	0.0000	0.0000	0.0000	0.0000	0.0000	0.0230	0.0000	0.0000
C20H42	0.0000	0.0000	0.0000	0.0037	0.0000	0.0000	0.0000	0.0000	0.0000	0.0000	0.0099	0.0000	0.0000
ALKYLATE	0.0000	0.0000	0.0000	0.0000	0.0000	0.0000	0.0000	0.0000	0.0000	0.0000	0.0000	0.0000	0.0000
ISOMERAT	0.0000	0.0000	0.0000	0.0000	0.0000	0.0000	0.0000	0.0000	0.0000	0.0000	0.0000	0.0000	0.0000
REFORMAT	0.0000	0.0000	0.0000	0.0000	0.0000	0.0000	0.0000	0.0000	0.0000	0.0000	0.0000	0.0000	0.0000
C7-300HC	0.0000	0.0000	0.0000	0.0000	0.0000	0.0000	0.0000	0.0000	0.0000	0.0000	0.0000	0.1006	0.0000
3-350HC	0.0000	0.0000	0.0000	0.0000	0.0000	0.0000	0.0000	0.0000	0.0000	0.0000	0.0000	0.0265	0.0000
350-5HC	0.0000	0.0000	0.0000	0.0000	0.0000	0.0000	0.0000	0.0000	0.0000	0.0000	0.0000	0.0000	0.7298
500+HC	0.0000	0.0000	0.0000	0.0000	0.0000	0.0000	0.0000	0.0000	0.0000	0.0000	0.0000	0.0000	0.0557
C7-300HT	0.0000	0.0000	0.0000	0.0000	0.0000	0.0000	0.0000	0.0000	0.0000	0.0000	0.0000	0.2981	0.0000
3-350HT	0.0000	0.0000	0.0000	0.0000	0.0000	0.0000	0.0000	0.0000	0.0000	0.0000	0.0000	0.0695	0.0000
350-5HT	0.0000	0.0000	0.0000	0.0000	0.0000	0.0000	0.0000	0.0000	0.0000	0.0000	0.0000	0.0000	0.1475
500+HT	0.0000	0.0000	0.0000	0.0000	0.0000	0.0000	0.0000	0.0000	0.0000	0.0000	0.0000	0.0000	0.0670

Exhibit 3-11 Stream table for the F-T synthesis and product upgrading area – CO_2 vent (continued)

	20	21	22	23	23	27	28	29	30	31	32	33	34
V-L Mole Fraction													
OXVAP	0.0000	0.0000	0.0000	0.0001	0.0000	0.0000	0.0000	0.0000	0.0000	0.0000	0.0000	0.0000	0.0000
OXHC	0.0000	0.0000	0.0000	0.0018	0.0000	0.0000	0.0000	0.0000	0.0860	0.1638	0.0000	0.0000	0.0000
OXH2O	0.0000	0.0000	0.0000	0.0005	0.0000	0.0000	0.0000	0.0000	0.0000	0.0000	0.0000	0.0000	0.0000
C5N	0.0000	0.0000	0.0000	0.0000	0.0000	0.0000	0.0000	0.0000	0.0000	0.0000	0.0000	0.0000	0.0000
C6N	0.0000	0.0000	0.0000	0.0000	0.0000	0.0000	0.0000	0.0000	0.0000	0.0000	0.0000	0.0000	0.0000
C7N	0.0000	0.0000	0.0000	0.0000	0.0000	0.0000	0.0000	0.0000	0.0000	0.0000	0.0000	0.0000	0.0000
C8N	0.0000	0.0000	0.0000	0.0000	0.0000	0.0000	0.0000	0.0000	0.0000	0.0000	0.0000	0.0000	0.0000
C9N	0.0000	0.0000	0.0000	0.0000	0.0000	0.0000	0.0000	0.0000	0.0000	0.0000	0.0000	0.0000	0.0000
C10N	0.0000	0.0000	0.0000	0.0000	0.0000	0.0000	0.0000	0.0000	0.0000	0.0000	0.0000	0.0000	0.0000
C6A	0.0000	0.0000	0.0000	0.0000	0.0000	0.0000	0.0000	0.0000	0.0000	0.0000	0.0000	0.0000	0.0000
C7A	0.0000	0.0000	0.0000	0.0000	0.0000	0.0000	0.0000	0.0000	0.0000	0.0000	0.0000	0.0000	0.0000
C8A	0.0000	0.0000	0.0000	0.0000	0.0000	0.0000	0.0000	0.0000	0.0000	0.0000	0.0000	0.0000	0.0000
C9A	0.0000	0.0000	0.0000	0.0000	0.0000	0.0000	0.0000	0.0000	0.0000	0.0000	0.0000	0.0000	0.0000
C10AP	0.0000	0.0000	0.0000	0.0000	0.0000	0.0000	0.0000	0.0000	0.0000	0.0000	0.0000	0.0000	0.0000
C21OP	0.0000	0.0000	0.0000	0.0136	0.0000	0.0000	0.0000	0.0000	0.0000	0.0000	0.0317	0.0000	0.0000
C22OP	0.0000	0.0000	0.0000	0.0153	0.0000	0.0000	0.0000	0.0000	0.0000	0.0000	0.0305	0.0000	0.0000
C23OP	0.0000	0.0000	0.0000	0.0168	0.0000	0.0000	0.0000	0.0000	0.0000	0.0000	0.0294	0.0000	0.0000
C24OP	0.0000	0.0000	0.0000	0.0179	0.0000	0.0000	0.0000	0.0000	0.0000	0.0000	0.0284	0.0000	0.0000
C25OP	0.0000	0.0000	0.0000	0.0188	0.0000	0.0000	0.0000	0.0000	0.0000	0.0000	0.0274	0.0000	0.0000
C26OP	0.0000	0.0000	0.0000	0.0193	0.0000	0.0000	0.0000	0.0000	0.0000	0.0000	0.0264	0.0000	0.0000
C27OP	0.0000	0.0000	0.0000	0.0197	0.0000	0.0000	0.0000	0.0000	0.0000	0.0000	0.0254	0.0000	0.0000
C28OP	0.0000	0.0000	0.0000	0.0197	0.0000	0.0000	0.0000	0.0000	0.0000	0.0000	0.0245	0.0000	0.0000
C29OP	0.0000	0.0000	0.0000	0.0197	0.0000	0.0000	0.0000	0.0000	0.0000	0.0000	0.0236	0.0000	0.0000
C30WAX	0.0000	0.0000	0.0000	0.6758	0.0000	0.0000	0.0000	0.0000	0.0000	0.0000	0.7198	0.0000	0.0000
Total	1.0000	1.0000	1.0000	1.0000	1.0000	1.0000	1.0000	1.0000	1.0000	1.0000	1.0000	1.0000	1.0000
V-L Molecular Weight	17.493	18.015	44.010	608.035	16.693	2.016	2.016	2.016	104.506	177.165	658.868	105.664	194.681
V-L Flowrate (lb_{mol}/hr)	142,824	8,775	36,786	572	203,707	709	362	2,756	921	524	537	1,398	2,013
V-L Flowrate (lb/hr)	2,498,396	158,087	1,618,962	347,549	3,400,404	1,429	731	5,556	96,211	92,751	353,896	147,699	391,830
Solids Flowrate (lb/hr)	0	0	0	0	0	0	0	0	0	0	0	0	0
Temperature (°F)	600	240	100	487	343	100	100	100	100	100	100	112	255
Pressure (psia)	360.0	325.0	265.0	75.0	325.0	600.0	600.0	120.0	50.0	50.0	50.0	40.0	20.0
Density (lb/ft^3)	0.549	56.237	2.138	37.600	0.625	0.197	0.197	0.040	43.116	46.189	51.458	41.122	42.502
	A - Reference conditions are 32.02 F & 0.089 PSIA												

3.3 Product Recovery

All of the hydrocarbon streams from the Fischer-Tropsch synthesis section (wax and condensate recovered from the overhead vapor streams) are combined in the feed drum of the product fractionator. The product fractionator separates these hydrocarbons into a low-pressure light hydrocarbon vapor stream and three liquid streams: naphtha, middle distillate, and wax. The liquid cuts of the fractionators are defined by the following boiling range cut points:

Naphtha	C_5 saturates to 350°F (177°C)
Middle Distillate	350-650°F (177-343°C)
Wax	Greater than 650°F (343°C)

This simple separation section consists of one fractionation column with a steam side-stripper. Required support equipment (heat exchangers, flash drums, and furnace utilities) are included in the capital estimate of this section. The feed drum operates as a flash drum at approximately 135°F (57°C) and 90 psia (6.2 Bar). The vapor feed rate to the tower is used for pressure control of the flash drum. The vapor serves as stripping media after being fed to the middle of the column. The liquid is heated to approximately 343°F (173°C) via a fired heater, which burns residual fuel gas.

The naphtha product is withdrawn from an upper tray and is sent to the naphtha hydrotreating section. Steam stripping is used to provide a stable liquid middle distillate stream from the middle of the column, which is cooled (via contact with the column feed stream), and then is sent to the distillate hydrotreating section. The tower bottoms are withdrawn and cooled via contact with the tower feed and subsequent water-cooled exchangers prior to being sent to the wax hydrocracking section.

The Hydrogen Recovery system processes a slipstream of the F-T tail gas to recover H_2 for use in the hydrotreaters and hydrocracker. A pressure swing adsorption (PSA) unit is used to produce high purity H_2 and the rejected stream from the process is blended with the remaining F-T tail gas for use as fuel gas.

The rationale for placement of the hydrogen recovery downstream of the F-T reactor is three-fold:

1. The presence of H_2 promotes the F-T reaction:
   $CO + 2n\ H_2 = CnH_2n + n\ H_2O$.
2. The F-T reactor produces additional H_2 via the WGS reaction:
   $CO + H_2O = CO_2 + H_2$.
3. Less gas is treated per unit of H_2 recovered since the F-T liquids are removed.

Fuel gas recovered from the Hydrocarbon Recovery, Hydrogen Recovery, Naphtha Hydrotreating, Distillate Hydrotreating, and Wax Hydrocracking units is mixed, flashed, and then compressed to 350 psia at 110 °F.

Oxygen and steam are then added to this stream prior to a WGS reactor in order to increase the H_2 and CO_2 fractions in the fuel gas. After the WGS reactor in the sequestration case, this stream is treated by proprietary amine AGR process which is used to capture CO_2, thereby reducing the greenhouse gas (GHG) emissions in the turbine exhaust. This captured CO_2 is mixed with the CO_2 removed from the F-T synthesis loop and sent to the gasification island for

dehydration and compression. In the vent case the fuel gas is combusted without shifting or CO_2 capture.

The remaining fuel gas at 335 psia is separated and part of it routed to the various F-T process furnaces. The remaining F-T fuel gas is sent to the gasification area for coal drying and power production. A simplified block flow diagram of the power generation area of the facility is provided in Section 3.6.1.

3.4 Recycle Gas Loop

Vapor products from the second-stage reactors (those leaving the Fischer-Tropsch synthesis section) are sent to a cyclone to prevent liquid carryover, cooled, and then sent to a three-phase separator. The hot condensate is sent to the product upgrading processes. The remaining vapors are processed for CO_2 removal, oxygenate removal, dehydration, and additional hydrocarbon recovery. The majority of the resulting tail-gas vapor is recycled to the F-T reactor, with the remainder being processed in the hydrogen recovery unit.

The remaining pre-fuel gas from the hydrogen recovery unit is mixed with the light gases produced in the hydrocarbon upgrading sections and the off-gas from the wax stream. In the case of the CO_2 sequestration case, this fuel gas is shifted to maximize CO_2 capture potential. In both cases, a portion of the fuel gas is separated out for combustion in direct fired heaters throughout the CTL plant, which allows for more steam from the heat recovery to be directed to electrical power production, and the remainder is sent to the combustion turbines.

3.5 Product Upgrading

3.5.1 Naphtha Hydrotreaters

Light liquid hydrocarbon products are processed in the naphtha hydrotreating units to produce stabilized (heteroatom, olefinic, and aromatic content is reduced) F-T naphtha. This is then blended with naphtha produced in the hydrocracker. The off gas from this process is combined with portions of the F-T tail gas.

3.5.2 Middle Distillate Hydrotreaters

The product recovery distillation tower produces a middle distillate that is sent to a fixed bed catalytic hydrotreater that produces an acceptable quality diesel fuel. This processing section removes oxygenates and any residual heteroatoms (sulfur and nitrogen), and greatly reduces the olefinic and aromatic content. The distillate hydrotreater also produces, and the processing section separates off, a waste-water stream and a residual C4- vapor stream, which is recovered. The hydrotreated middle distillate from this processing section is blended with the analogous stream from the wax hydrocracker to form a product diesel. The product diesel has an estimated pour point of -45.6°C (-50.1°F), which is well below the target value of any region in the United States [15], and the estimated cetane index of this diesel product is 70.7, which is above the standards set in the World Wide Fuel Charter (minimum requirements between 48 and 55 depending on category [16]); hence there is no need for additives. These values are provided in Exhibit 3-12.

Exhibit 3-12 Diesel properties

Property	Value
Density, lb/bbl	266.9
Net Heat of Combustion, MMBtu/gal (LHV)	0.12
Pour Point, °F	-50.1
Cetane Index	70.7

3.5.3 Wax Hydrocracking

The models utilized in this study are based on Chevron's isocracking process that emphasized diesel production compared to naphtha production. [10] Based on the reported yields for a two-stage design processing VGO (Vacuum Gas Oil), a set of wax hydrocracking yields was developed. Exhibit 3-13 provides the wax hydrocracking model product yield. The wax hydrocracking model produces a Diesel/(C5+ naphtha) product ratio of 6.

Exhibit 3-13 Wax hydrocracking model product yield distributions

Component	Yields	
	Weight %	Volume %
C_1-C_4s	4.50	-
C_5-C_6s	4.59	5.58
Naphtha	6.67	7.39
Diesel	84.24	87.03
Total	**100.00**	**100.00**
C_5+Naphtha	11.26	12.97
Diesel/(C_5+Naphtha)	7.48	6.71

The F-T process design can be adjusted to a low wax yield (as little as 56 weight percent) and still make the desired 2.33/1 Diesel/(C5+Naphtha) ratio by using the wax hydrocracking model described previously.

This facility was designed for maximum diesel fuel production and the hydrocracker is configured to maximize diesel production by selectively hydrocracking the wax product mainly to the diesel boiling range. The wax fraction is sent to the wax hydrocracker, which breaks down the wax into naphtha and middle distillate, as well as some residual C4- vapor, which is recovered. The single, multibed, downflow wax hydrocracker catalytically cracks the wax under a 75-103 bar (1088-1494 psia) hydrogen atmosphere at a nominal temperature of 371°C (700°F). There is inter-bed cooling to remove the heat of reaction from hydrogen-rich recycle gas. A flash drum is used to recover unutilized hydrogen-rich gas for recycle back to the hydrocracker. A distillation column is used to separate the liquids from the flash into naphtha, middle distillate, and wax streams. The residual uncracked wax is recycled to extinction. The middle distillate from the wax hydrocracker is sent for blending with the middle distillate range product from the

distillate hydrotreating section. The naphtha stream from the wax hydrocracker is sent to the naphtha reforming unit.

To achieve a 70:30 diesel/naphtha product split (volume basis), the wax hydrocracker model was redesigned from that used in the April 2007 study to increase the diesel fuel yield. In the process, a certain amount of hydroisomerization occurs, which has the beneficial effect of lowering the pour point of the diesel fuel.

3.6 Power Production

The plant is designed to produce sufficient electric power to satisfy the power requirements for the gasification plant and the F-T facility, to make the entire facility electric power independent. Limiting the amount of excess power produced has two benefits: 1) the facility is not dependent on external power sources or supplies and 2) it improves the efficiency of the facility.

The prevailing industry philosophy in designing CTL facilities is that excess syngas should only be combusted in a direct-fired boiler so as to maximize the amount of syngas converted to the higher value liquid fuel products. It was determined, however, that the use of a combined-cycle power cycle (i.e., adding a combustion turbine to the facility) improved both the environmental and economic performance of the facility, and subsequently it was decided to use such a power cycle. Commercially available combustion turbines of the appropriate size were selected in order to minimize excess power production.

3.6.1 Combustion Turbine Generators

The combustion turbine generators that could be used for this application are three General Electric (GE) gas turbines (MS6001B) each producing a nominal 45 MWe. The actual total power production is 112 MWe in the CO_2 sequestration case and 136 MWe in the CO_2 vent case. The difference in power output between the cases is attributed to differences in fuel gas composition. The stream data are available in Exhibit 3-3 and the block diagram is provided in Exhibit 3-14

Exhibit 3-14 Block flow diagram for the fuel gas preparation and power generation area

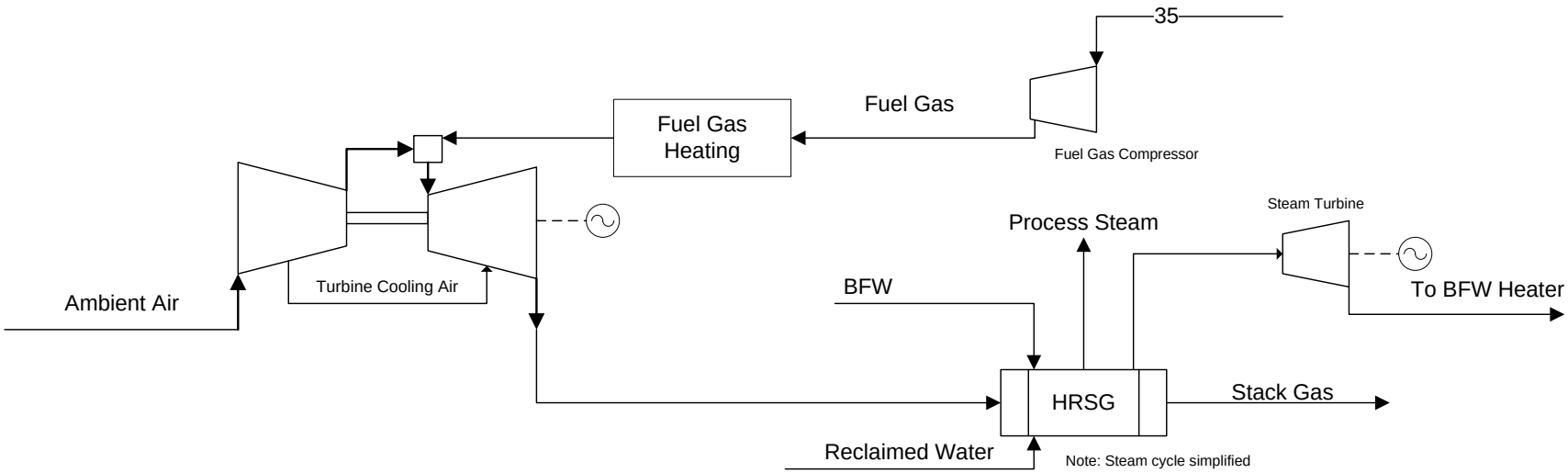

Source: NETL

Because fuel gas from the F-T area is imported into the gasification and power production Aspen model, some adjustment had to be made to the composition of the imported fuel gas. The Aspen gasification and power plant model do not contain any hydrocarbons heavier than methane. Therefore, in order to import the fuel gas into the power plant model, the heavier hydrocarbons were changed to methane on a weight basis. This overestimates the heating value and tends to increase the power production because methane has a higher heating value than the heavier hydrocarbons. However, this change is slight since there is only a relatively small amount of these hydrocarbons in the total fuel gas going to the gas turbine. Using the sequestration case as an example, Exhibit 3-15 shows there is negligible effect on lower heating value (LHV) by substituting trace heavy components with methane.

Exhibit 3-15 Fuel gas LHV comparison between turbine and F-T models

Component	LHV Btu/lb	Mass Fraction in F-T Fuel Gas	LHV F-T Fuel Gas, Btu/lb	Mass Fraction in Turbine Fuel Gas	LHV Turbine Fuel Gas, Btu/lb
H_2	51,573	0.02301009	1186.69937	0.0230101	1186.69937
CO	4,344	0.0818232	355.43998	0.0818232	355.43998
CO_2	0	0.00211792	0.00000	0.0021179	0.00000
H_2O	0	0.00296592	0.00000	0.0029659	0.00000
NH_3	7,998	0.00025819	2.06500	0.0002582	2.06500
HCN	9,915	8.51E-07	0.00844	8.51E-07	0.00844
CH_4	21,509	0.40201125	8646.85998	0.4021163	8649.11842
C_2H_4	20,275	1.18E-06	0.02394	0	0.00000
C_2H_6	20,424	0.00010435	2.13124	0	0.00000
C_3H_6	19,675	8.44E-09	0.00017	0	0.00000
C_3H_8	19,920	6.39E-08	0.00127	0	0.00000
IC_4H_8	19,469	1.16E-11	0.00000	0	0.00000
			10193.22939		10193.33121

3.6.2 Steam Turbine Power Generation

Heat from the various gasification, AGR, and F-T processes is recovered with multiple heat exchangers matching the quality and quantity of available heat. This heat recovery produces steam at various pressures, part of which is used for process needs and the remainder is used to run the steam turbines to produce additional power of 316 MWe and 337 MWe of power in the sequestration and CO_2 vent cases, respectively.

The HRSG is a horizontal gas flow, drum-type, multi-pressure design that is matched to the characteristics of the gas turbine exhaust gas. The HP drum produces steam at main steam pressure; while the intermediate pressure (IP) drum produces steam for export to the cold reheat. The HRSG drum pressures are nominally 1,800/452 psia for the HP/IP turbine sections, respectively.

Natural circulation of steam is accomplished in the HRSG by utilizing differences in densities due to temperature differences of the steam. The natural circulation HRSG provides the most cost-effective and reliable design.

3.6.3 Flare Stack

Each gasifier has a self-supporting, refractory-lined, carbon steel flare stack to combust and dispose of product gas during startup, shutdown, and upset conditions. The flare stack is provided with multiple pilot burners, fueled by natural gas or propane, with pilot monitoring instrumentation.

4 Performance Summary and Mass Balances

The plant power output, including auxiliary load, for the facilities is summarized in Exhibit 4-1 and Exhibit 4-2.

The total F-T liquids production of 49,992 bpd consists of 35,230 bpd (70.5 percent) diesel and 14,762 bpd (29.5 percent) of low-octane C5+ naphtha. The diesel product can be sold as a commercial diesel fuel after the addition of appropriate additives. The C5+ naphtha product is a low octane material that is an excellent ethylene cracker feedstock, or it can be further processed to make a gasoline blending component.

If more export power is required, additional coal must be consumed to produce it.

Exhibit 4-1 Plant performance summary – CO_2 sequestration case

Plant Output		
Gas Turbine Power	111,600	kW_e
Steam Turbine Power	315,600	kW_e
Total	427,200	kW_e
Auxiliary Load		
Coal Handling	1,760	kW_e
Coal Milling	8,160	kW_e
Slag Handling	2,080	kW_e
Air Separation Unit Auxiliaries	4,000	kW_e
Air Separation Unit Main Air Compressor	235,480	kW_e
Oxygen Compressor	35,600	kW_e
Nitrogen Compressors	6,080	kW_e
CO_2 Compressor	43,480	kW_e
Boiler Feedwater Pumps	1,640	kW_e
Condensate Pump	200	kW_e
Quench Water Pump	2,280	kW_e
Syngas Recycle Compressor	2,920	kW_e
Circulating Water Pump	6,800	kW_e
Ground Water Pumps	800	kW_e
Cooling Tower Fans	3,560	kW_e
Scrubber Pumps	1,360	kW_e
Acid Gas Removal	13,640	kW_e
Gas Turbine Auxiliaries	4,000	kW_e
Steam Turbine Auxiliaries	400	kW_e
Claus Plant/TGTU Auxiliaries	1,000	kW_e
Claus Plant TG Recycle Compressor	840	kW_e
F-T Power requirement	31,948	kW_e
Miscellaneous Balance of Plant[A]	12,000	kW_e
Transformer Losses	2,520	kW_e
Total	422,548	kW_e
Plant Performance		
Net Auxiliary Load	422,548	kW_e
Net Plant Power	4,652	kW_e
Coal Feed Flowrate	794,022 (1,750,518)	kg/hr (lb/hr)
Thermal Input[B]	5,984,963	kW_t
Condenser Duty	928 (880)	GJ/hr (MMBtu/hr)
Raw Water Withdrawal	32.8 (8,672)	m^3/min (gpm)
Carbon in coal	506,147 (1,115,863)	kg/hr (lb/hr)
Carbon in Slag	2,531 (5,579)	kg/hr (lb/hr)
Sulfur	19,901 (43,875)	kg/hr (lb/hr)
Raw Water Consumption	26.8 (7,078)	m^3/min (gpm)

A - Includes plant control systems, lighting, HVAC, and miscellaneous low voltage loads
B - HHV of Illinois No. 6 coal is 27,135 kJ/kg (11,666 Btu/lb)

Exhibit 4-2 Plant performance summary – CO_2 vent case

Plant Output		
Gas Turbine Power	136,000	kW_e
Steam Turbine Power	336,800	kW_e
Total	472,800	kW_e
Auxiliary Load		
Coal Handling	1,760	kW_e
Coal Milling	8,160	kW_e
Slag Handling	2,080	kW_e
Air Separation Unit Auxiliaries	4,000	kW_e
Air Separation Unit Main Air Compressor	235,480	kW_e
Oxygen Compressor	35,600	kW_e
Nitrogen Compressors	6,080	kW_e
CO_2 Compressor	0	kW_e
Boiler Feedwater Pumps	1,840	kW_e
Condensate Pump	240	kW_e
Quench Water Pump	2,280	kW_e
Syngas Recycle Compressor	2,920	kW_e
Circulating Water Pump	6,240	kW_e
Ground Water Pumps	720	kW_e
Cooling Tower Fans	3,280	kW_e
Scrubber Pumps	1,360	kW_e
Acid Gas Removal	13,640	kW_e
Gas Turbine Auxiliaries	4,000	kW_e
Steam Turbine Auxiliaries	400	kW_e
Claus Plant/TGTU Auxiliaries	1,000	kW_e
Claus Plant TG Recycle Compressor	840	kW_e
F-T Power requirement	29,278	kW_e
Miscellaneous Balance of Plant[A]	12,000	kW_e
Transformer Losses	2,520	kW_e
Total	375,718	kW_e
Plant Performance		
Net Auxiliary Load	375,718	kW_e
Net Plant Power	97,082	kW_e
Coal Feed Flowrate	794,022 (1,750,518)	kg/hr (lb/hr)
Thermal Input[B]	5,984,963	kW_t
Condenser Duty	928 (880)	GJ/hr (MMBtu/hr)
Raw Water Withdrawal	30.1 (7,940)	m^3/min (gpm)
Carbon in coal	506,147 (1,115,863)	kg/hr (lb/hr)
Carbon in Slag	2,531 (5,579)	kg/hr (lb/hr)
Sulfur	19,901 (43,875)	kg/hr (lb/hr)
Raw Water Consumption	24.5 (6,473)	m^3/min (gpm)

A - Includes plant control systems, lighting, HVAC, and miscellaneous low voltage loads
B - HHV of Illinois No. 6 coal is 27,135 kJ/kg (11,666 Btu/lb)

4.1.1 Carbon Balance

An overall carbon balance for the facilities is provided in Exhibit 4-3 and Exhibit 4-4. About 0.5 percent of the total carbon is encapsulated in the slag, while over 80 percent of the entering carbon is converted to syngas going to the F-T reactor. In the sequestration case the compressed CO_2 and F-T liquid product streams contain the majority of carbon exiting the plant, accounting

for approximately 55 percent and 40 percent of the total entering carbon, respectively. The total amount of carbon lost to the environment is about 6 percent of the entering carbon.

Note that carbon emissions from the stack are in the form of CO_2 emissions to the atmosphere, and that these emissions only represent a fraction of the total life cycle GHG emissions associated with the finished diesel fuel.

Exhibit 4-3 Elemental carbon mass balance – CO_2 sequestration case

Carbon In, kg/hr (lb/hr)		Carbon Out, kg/hr (lb/hr)		
Coal	506,109 (1,115,863)	Naphtha	56,404 (124,349)	11%
		Diesel	150,183 (331,096)	30%
		Slag	2,531 (5,579)	1%
		CO_2	272,389 (600,516)	54%
		Stack gas	24,603 (54,324)	5%
Total	**506,109 (1,115,863)**	**Total**	**506,109 (1,115,863)**	**100%**

Exhibit 4-4 Elemental carbon mass balance – CO_2 vent case

Carbon In, kg/hr (lb/hr)		Carbon Out, kg/hr (lb/hr)		
Coal	506,109 (1,115,863)	Naphtha	56,404 (124,349)	11%
		Diesel	150,183 (331,096)	30%
		Slag	2,531 (5,579)	1%
		Stack gas	297,030 (654,839)	59%
Total	**506,109 (1,115,863)**	**Total**	**506,109 (1,115,863)**	**100%**

4.1.2 Sulfur Balance

All the sulfur in the coal is recovered as elemental sulfur in the Claus plant.

4.1.3 Water Balance

Water balances in Exhibit 4-5 and Exhibit 4-6 represent one of the four gasification sections (see Section 3.1.3) and one quarter of the F-T area water needs. The last row represents the complete F-T plant and all four of the gasification sections. The water demand is the total water demand for that plant section; this consists of a combination of raw and recycled water. Some water may also be discharged via a permitted discharge. The raw water consumption is the difference between the water withdrawal and consumption. Raw water consumption is 8.4 and 7.7 barrels of water per bbl of diesel produced for the CO_2 Sequestration Case and CO_2 Vent Case, respectively (5.9 and 5.4 barrels of water per barrel of F-T liquids produced).

Exhibit 4-5 Water balance – CO_2 sequestration case

Water Usage by Area m^3/min (gpm)	Water Demand	Internal Recycle	Raw Water Withdrawal	Process Water Discharge	Raw Water Consumption
Slag Handling	0.43 (114)	0.43 (114)	0.0 (0)	0.0 (0)	0.0 (0)
Quench/Wash	3.0 (786)	2.07 (548)	0.9 (238)	0.0 (0)	0.9 (238)
SWS Blowdown	0.0 (0)	0.0 (0)	0.0 (0)	0.03 (7)	-0.03 (-7)
Condenser Makeup	0.8 (221)	0.0 (0)	0.8 (221)	0.0 (0)	0.8 (221)
Gasifier Steam	0.3 (84)	0.0 (0)	0.3 (84)		
Shift Steam	0.5 (128)	0.0 (0)	0.5 (128)		
BFW Makeup	0.03 (8)	0.0 (0)	0.03 (8)		
Cooling Tower	6.7 (1,742)	0.28 (74)	6.3 (1,668)	1.5 (392)	4.8 (1,276)
BFW Blowdown	0	0.03 (8)	-0.03 (-8)		
SWS Blowdown	0.0 (0)	0.25 (66)	-0.25 (-66)		
SWS Excess Water	0.0 (0)	0.0 (0)	0.0 (0)		
¼ of F-T area values	0.16 (41.60)	0	0.16 (41.60)	0	0.16 (41.60)
Total	10.99 (2,904)	2.79 (736)	8.21 (2,168)	1.5 (398)	6.70 (1,770)
Total 4 Gasifier sections plus F-T plant	**43.98 (11,617)**	**11.15 (2,945)**	**32.83 (8,672)**	**6.03 (1,594)**	**26.79 (7,078)**

Exhibit 4-6 Water balance – CO_2 vent case

Water Usage by Area m^3/min (gpm)	Water Demand	Internal Recycle	Raw Water Withdrawal	Process Water Discharge	Raw Water Consumption
Slag Handling	0.43 (114)	0.43 (114)	0.0 (0)	0.0 (0)	0.0 (0)
Quench/Wash	3.0 (786)	2.07 (548)	0.9 (238)	0.0 (0)	0.9 (238)
SWS Blowdown	0.0 (0)	0.0 (0)	0.0 (0)	0.03 (7)	-0.03 (-7)
Condenser Makeup	0.8 (222)	0.0 (0)	0.8 (222)	0.0 (0)	0.8 (222)
Gasifier Steam	0.3 (84)	0.0 (0)	0.3 (84)		
Shift Steam	0.5 (128)	0.0 (0)	0.5 (128)		
BFW Makeup	0.03 (9)	0.0 (0)	0.03 (9)		
Cooling Tower	6.1 (1,601)	0.28 (75)	5.8 (1,526)	1.4 (360)	4.4 (1,166)
BFW Blowdown	0.0 (0)	0.03 (9)	-0.03 (-9)		
SWS Blowdown	0.0 (0)	0.25 (66)	-0.25 (-66)		
SWS Excess Water	0.0 (0)	0.0 (0)	0.0 (0)		
¼ of F-T area values	0.04 (9)	0.04 (9)	0.0 (0)	0.0 (00)	0.0 (00)
Total	10.3 (2,722)	2.79 (737)	7.5 (1,985)	1.4 (367)	6.1 (1,618)
Total 4 Gasifier sections plus F-T plant	**41.3 (10,896)**	**11.20 (2956)**	**30.1 (7,940)**	**5.6 (1,467)**	**24.5 (6,473)**

5 Cost Estimation Results

5.1 Capital and Operating Costs

The gasifier, associated syngas treatment units, Rectisol® system, CO_2 compressors, Claus unit, gas and steam turbines, and other equipment typically associated with an IGCC plant were scaled from updated cost estimates (2011 dollar basis) for the Shell gasifier Case 6 in "Cost and Performance Baseline for Fossil Energy Power Plants, Volume 1: Bituminous Coal and Natural Gas to Electricity." [8] Capital costs for the F-T reactor and various treatment and upgrading systems were based on adjusted, vendor-furnished, actual cost data, and best possible projections.

A process contingency of 25 percent was applied to the F-T reactor and associated equipment. The capital costs at the TPC level include equipment, materials, labor, indirect construction costs, engineering, and contingencies. Additional details are highlighted in Section 1.6 of this report and the NETL QGESS. [6]

The TOC for the entire CTL facility with CO_2 capture was estimated to be $6,532 million. This cost includes appropriate contingency factors and owners costs. [6] On a per barrel basis of daily liquid capacity, this cost is $130,662/bpd$_{FTL}$ for the sequestration case. Exhibit 5-1 shows a summary breakdown of the capital costs for the CO_2 sequestration case and Exhibit 5-3 shows a summary breakdown of the capital costs for the CO_2 vent case. The total TOC is the TPC plus owner's costs.

A credit of $60/MWh is included for excess power generated. Exhibit 5-2 and Exhibit 5-4 show the breakdown of the total operating cost for the sequestration and vent cases, respectively.

Exhibit 5-1 Total plant cost summary with CO_2 sequestration

	Client:	USDOE/NETL								**Report Date**	2013-Dec-23			
	Project:	Activity 25												
						TOTAL PLANT COST SUMMARY								
	Case:	Base Case 1 - Total System												
	Plant Size:	49,992	bbl/day	**Estimate Type:**		Conceptual			**Cost Base (Jun)**		2011	($x1000)		
Acct		**Equipment**	**Material**	**Labor**		**Sales**	**Bare Erected**	**Eng'g CM**	**Contingencies**		**TOTAL PLANT COST**			
No.	**Item/Description**	**Cost**	**Cost**	**Direct**	**Indirect**	**Tax**	**Cost $**	**H.O.& Fee**	**Process**	**Project**	**$**	**$/bpd**	**$/bpd$_{ECO}$**	**$/bpd$_{EPD}$**
1	COAL & SORBENT HANDLING													
1.1	Coal Receive & Unload	$10,063	$0	$4,850	$0	$0	$14,913	$1,296	$0	$3,242	$19,451	$389	$371	$464
1.2	Coal Stackout & Reclaim	$13,003	$0	$3,109	$0	$0	$16,112	$1,368	$0	$3,496	$20,976	$420	$400	$500
1.3	Coal Conveyors & Yd Crush	$12,090	$0	$3,076	$0	$0	$15,166	$1,290	$0	$3,291	$19,747	$395	$377	$471
1.4	Other Coal Handling	$3,163	$0	$712	$0	$0	$3,875	$328	$0	$841	$5,044	$101	$96	$120
1.5	Sorbent Receive & Unload	$0	$0	$0	$0	$0	$0	$0	$0	$0	$0	$0	$0	$0
1.6	Sorbent Stackout & Reclaim	$0	$0	$0	$0	$0	$0	$0	$0	$0	$0	$0	$0	$0
1.7	Sorbent Conveyors	$0	$0	$0	$0	$0	$0	$0	$0	$0	$0	$0	$0	$0
1.8	Other Sorbent Handling	$0	$0	$0	$0	$0	$0	$0	$0	$0	$0	$0	$0	$0
1.9	Coal & Sorbent Hnd.Foundations	$0	$6,719	$17,561	$0	$0	$24,281	$2,307	$0	$5,318	$31,906	$638	$608	$760
	SUBTOTAL 1.	**$38,318**	**$6,719**	**$29,308**	**$0**	**$0**	**$74,346**	**$6,589**	**$0**	**$16,187**	**$97,122**	**$1,943**	**$1,852**	**$2,315**
2	COAL & SORBENT PREP & FEED													
2.1	Coal Crushing & Drying	$121,566	$7,331	$17,471	$0	$0	$146,368	$12,217	$0	$31,717	$190,302	$3,807	$3,629	$4,536
2.2	Prepared Coal Storage & Feed	$5,758	$1,383	$891	$0	$0	$8,032	$664	$0	$1,739	$10,435	$209	$199	$249
2.3	Dry Coal Injection System	$189,497	$2,184	$17,357	$0	$0	$209,038	$17,410	$0	$45,290	$271,738	$5,436	$5,182	$6,477
2.4	Misc.Coal Prep & Feed	$3,166	$2,313	$6,814	$0	$0	$12,293	$1,099	$0	$2,678	$16,070	$321	$306	$383
2.5	Sorbent Prep Equipment	$0	$0	$0	$0	$0	$0	$0	$0	$0	$0	$0	$0	$0
2.6	Sorbent Storage & Feed	$0	$0	$0	$0	$0	$0	$0	$0	$0	$0	$0	$0	$0
2.7	Sorbent Injection System	$0	$0	$0	$0	$0	$0	$0	$0	$0	$0	$0	$0	$0
2.8	Booster Air Supply System	$0	$0	$0	$0	$0	$0	$0	$0	$0	$0	$0	$0	$0
2.9	Coal & Sorbent Feed Foundation	$0	$11,614	$9,966	$0	$0	$21,580	$2,005	$0	$4,717	$28,301	$566	$540	$675
	SUBTOTAL 2.	**$319,987**	**$24,826**	**$52,498**	**$0**	**$0**	**$397,310**	**$33,395**	**$0**	**$86,141**	**$516,846**	**$10,339**	**$9,856**	**$12,319**
3	FEEDWATER & MISC. BOP SYSTEMS													
3.1	Feedwater System	$1,568	$2,706	$1,419	$0	$0	$5,693	$515	$0	$1,242	$7,449	$149	$142	$178
3.2	Water Makeup & Pretreating	$1,161	$120	$638	$0	$0	$1,919	$177	$0	$629	$2,724	$54	$52	$65
3.3	Other Feedwater Subsystems	$882	$291	$260	$0	$0	$1,433	$124	$0	$311	$1,868	$37	$36	$45
3.4	Service Water Systems	$679	$1,354	$4,666	$0	$0	$6,698	$637	$0	$2,200	$9,535	$191	$182	$227
3.5	Other Boiler Plant Systems	$3,658	$1,367	$3,364	$0	$0	$8,390	$764	$0	$1,831	$10,985	$220	$209	$262
3.6	FO Supply Sys & Nat Gas	$511	$966	$895	$0	$0	$2,372	$223	$0	$519	$3,113	$62	$59	$74
3.7	Waste Treatment Equipment	$1,570	$0	$973	$0	$0	$2,543	$245	$0	$836	$3,624	$73	$69	$86
3.8	Misc. Power Plant Equipment	$1,709	$228	$889	$0	$0	$2,826	$270	$0	$929	$4,025	$81	$77	$96
	SUBTOTAL 3.	**$11,739**	**$7,032**	**$13,103**	**$0**	**$0**	**$31,874**	**$2,953**	**$0**	**$8,497**	**$43,324**	**$867**	**$826**	**$1,033**

Exhibit 5-1 Total plant cost summary with CO_2 sequestration (continued)

Acct		Equipment	Material	Labor		Sales	Bare Erected	Eng'g CM	Contingencies		TOTAL PLANT COST			
No.	Item/Description	Cost	Cost	Direct	Indirect	Tax	Cost $	H.O.& Fee	Process	Project	$	$/bpd	$/bpd$_{ECO}$	$/bpd$_{EPD}$
4	GASIFIER & ACCESSORIES													
4.1	Gasifier, Syngas Cooler & Auxiliaries (Shell)	$699,517	$0	$301,659	$0	$0	$1,001,175	$88,113	$137,204	$188,698	$1,415,190	$28,308	$26,986	$33,732
4.2	Syngas Cooling	w/4.1	$0	w/ 4.1	$0	$0	$0	$0	$0	$0	$0	$0	$0	$0
4.3	ASU/Oxidant Compression	$551,221	$0	w/equip.	$0	$0	$551,221	$51,506	$0	$60,273	$663,000	$13,262	$12,642	$15,803
4.4	LT Heat Recovery & FG Saturation	$42,214	$0	$15,797	$0	$0	$58,011	$5,481	$0	$12,698	$76,191	$1,524	$1,453	$1,816
4.5	Misc. Gasification Equipment	w/4.1&4.2	$0	w/4.1&4.2	$0	$0	$0	$0	$0	$0	$0	$0	$0	$0
4.6	Flare Stack System	$0	$3,287	$1,328	$0	$0	$4,615	$431	$0	$1,009	$6,056	$121	$115	$144
4.8	Major Component Rigging	w/4.1&4.2	$0	w/4.1&4.2	$0	$0	$0	$0	$0	$0	$0	$0	$0	$0
4.9	Gasification Foundations	$0	$39,797	$23,734	$0	$0	$63,531	$5,856	$0	$17,347	$86,734	$1,735	$1,654	$2,067
	SUBTOTAL 4.	**$1,292,951**	**$43,084**	**$342,518**	**$0**	**$0**	**$1,678,553**	**$151,389**	**$137,204**	**$280,025**	**$2,247,170**	**$44,951**	**$42,850**	**$53,563**
5A	GAS CLEANUP & PIPING													
5A.1	Rectisol System	$217,615	$0	$176,832	$0	$0	$394,447	$37,218	$78,889	$102,111	$612,665	$12,255	$11,683	$14,603
5A.2	Elemental Sulfur Plant	$24,556	$4,786	$31,465	$0	$0	$60,808	$5,775	$0	$13,317	$79,900	$1,598	$1,524	$1,904
5A.3	Mercury Removal	$2,985	$0	$2,256	$0	$0	$5,241	$494	$262	$1,199	$7,196	$144	$137	$172
5A.4	Shift Reactors	$5,623	$0	$2,248	$0	$0	$7,870	$735	$0	$1,721	$10,327	$207	$197	$246
5A.5	Particulate Removal	w/4.1	$0	w/4.1	$0	$0	$0	$0	$0	$0	$0	$0	$0	$0
5A.6	Blowback Gas Systems	$3,633	$611	$342	$0	$0	$4,587	$423	$0	$1,002	$6,012	$120	$115	$143
5A.7	Fuel Gas Piping	$0	$1,692	$1,107	$0	$0	$2,799	$244	$0	$609	$3,652	$73	$70	$87
5A.9	HGCU Foundations	$0	$1,965	$1,324	$0	$0	$3,289	$304	$0	$1,078	$4,671	$93	$89	$111
	SUBTOTAL 5A.	**$254,412**	**$9,055**	**$215,574**	**$0**	**$0**	**$479,041**	**$45,194**	**$79,151**	**$121,037**	**$724,423**	**$14,491**	**$13,814**	**$17,267**
5AA	F-T SYNTHESIS AND PRODUCT UPGRADE													
5AA.1	FT Synthesis*	$220,379	w/equip.	w/equip.	$0	$0	$220,379	$21,156	$59,502	$75,260	$376,298	$7,527	$7,175	$8,969
5AA.2	Amine CO2 Adsorption	$15,940	w/equip.	w/equip.	$0	$0	$15,940	$1,530	$4,304	$5,444	$27,218	$544	$519	$649
5AA.3	Amine Regeneration Section	$74,537	w/equip.	w/equip.	$0	$0	$74,537	$7,156	$20,125	$25,455	$127,273	$2,546	$2,427	$3,034
5AA.4	Compression	$27,040	w/equip.	w/equip.	$0	$0	$27,040	$2,596	$7,301	$9,234	$46,171	$924	$880	$1,101
5AA.5	Hydrocarbon Recovery	$81,544	w/equip.	w/equip.	$0	$0	$81,544	$7,828	$22,017	$27,847	$139,237	$2,785	$2,655	$3,319
5AA.6	Hydrogen Recovery	$47,842	w/equip.	w/equip.	$0	$0	$47,842	$4,593	$12,917	$16,338	$81,690	$1,634	$1,558	$1,947
5AA.7	Autothermal Reformer	$0	w/equip.	w/equip.	$0	$0	$0	$0	$0	$0	$0	$0	$0	$0
5AA.8	Naphtha Hydrotreater	$5,481	w/equip.	w/equip.	$0	$0	$5,481	$526	$1,480	$1,872	$9,358	$187	$178	$223
5AA.9	Diesel Hydrotreater	$11,841	w/equip.	w/equip.	$0	$0	$11,841	$1,137	$3,197	$4,044	$20,219	$404	$386	$482
5AA.10	Wax Hydrocracker	$42,706	w/equip.	w/equip.	$0	$0	$42,706	$4,100	$11,531	$14,584	$72,921	$1,459	$1,390	$1,738
5AA.11	Raw Fuel Gas Compressor, HP	$21,883	w/equip.	w/equip.	$0	$0	$21,883	$2,041	$0	$4,785	$28,708	$574	$547	$684
5AA.12	Fuel Gas to GT Compressor, HP	$5,767	w/equip.	w/equip.	$0	$0	$5,767	$538	$0	$1,261	$7,566	$151	$144	$180
5AA.13	WGS Shift Reactor	$10,835	w/equip.	w/equip.	$0	$0	$10,835	$1,040	$2,925	$3,700	$18,501	$370	$353	$441
5AA.14	Amine CO2 Adsorption	$3,896	w/equip.	w/equip.	$0	$0	$3,896	$374	$1,052	$1,331	$6,653	$133	$127	$159
5AA.15	Amine Regeneration Section	$364	w/equip.	w/equip.	$0	$0	$364	$35	$98	$124	$621	$12	$12	$15
	SUBTOTAL 5AA.	**$570,056**	**$0**	**$0**	**$0**	**$0**	**$570,056**	**$54,649**	**$146,450**	**$191,277**	**$962,432**	**$19,252**	**$18,352**	**$22,940**
5B	CO2 REMOVAL & COMPRESSION													
5B.1	CO2 Removal System	$0	$0	$0	$0	$0	$0	$0	$0	$0	$0	$0	$0	$0
5B.2	CO2 Compression & Drying	$51,200	$0	$17,359	$0	$0	$68,560	$6,393	$0	$14,991	$89,944	$1,799	$1,715	$2,144
	SUBTOTAL 5B.	**$51,200**	**$0**	**$17,359**	**$0**	**$0**	$68,560	**$6,393**	**$0**	**$14,991**	**$89,944**	**$1,799**	**$1,715**	**$2,144**

Exhibit 5-1 Total plant cost summary with CO_2 sequestration (continued)

Acct		Equipment	Material	Labor		Sales	Bare Erected	Eng'g CM	Contingencies		TOTAL PLANT COST			
No.	Item/Description	Cost	Cost	Direct	Indirect	Tax	Cost $	H.O.& Fee	Process	Project	$	$/bpd	$/bpd$_{ECO}$	$/bpd$_{EPD}$
6	COMBUSTION TURBINE/ACCESSORIES						$0							
6.1	Combustion Turbine Generator	$47,397	$0	$3,359	$0	$0	$50,756	$10,985	$11,909	$14,199	$87,848	$1,757	$1,675	$2,094
6.2	Open	$0	$0	$0	$0	$0	$0	$0	$0	$0	$0	$0	$0	$0
6.3	Compressed Air Piping	$0	$0	$0	$0	$0	$0	$0	$0	$0	$0	$0	$0	$0
6.9	Combustion Turbine Foundations	$0	$394	$455	$0	$0	$849	$186	$0	$653	$1,689	$34	$32	$40
	SUBTOTAL 6.	**$47,397**	**$394**	**$3,814**	**$0**	**$0**	**$51,604**	**$11,171**	**$11,909**	**$14,852**	**$89,537**	**$1,791**	**$1,707**	**$2,134**
7	HRSG, DUCTING & STACK													
7.1	Heat Recovery Steam Generator	$12,719	$0	$2,463	$0	$0	$15,182	$1,408	$0	$1,659	$18,249	$365	$348	$435
7.2	Open	$0	$0	$0	$0	$0	$0	$0	$0	$0	$0	$0	$0	$0
7.3	Ductwork	$0	$1,076	$754	$0	$0	$1,830	$156	$0	$397	$2,382	$48	$45	$57
7.4	Stack	$2,076	$0	$775	$0	$0	$2,850	$266	$0	$312	$3,428	$69	$65	$82
7.9	HRSG,Duct & Stack Foundations	$0	$395	$397	$0	$0	$792	$74	$0	$260	$1,125	$23	$21	$27
	SUBTOTAL 7.	**$14,795**	**$1,471**	**$4,388**	**$0**	**$0**	**$20,654**	**$1,904**	**$0**	**$2,627**	**$25,185**	**$504**	**$480**	**$600**
8	STEAM TURBINE GENERATOR													$0
8.1	Steam TG & Accessories	$40,717	$0	$6,409	$0	$0	$47,126	$4,151	$0	$5,128	$56,404	$1,128	$1,076	$1,344
8.2	Turbine Plant Auxiliaries	$268	$0	$611	$0	$0	$879	$84	$0	$96	$1,059	$21	$20	$25
8.3	Condenser & Auxiliaries	$2,960	$0	$1,436	$0	$0	$4,396	$412	$0	$481	$5,288	$106	$101	$126
8.4	Steam Piping	$7,100	$0	$3,079	$0	$0	$10,179	$779	$0	$2,739	$13,697	$274	$261	$326
8.9	TG Foundations	$0	$1,264	$2,233	$0	$0	$3,497	$330	$0	$1,148	$4,975	$100	$95	$119
	SUBTOTAL 8.	**$51,045**	**$1,264**	**$13,768**	**$0**	**$0**	**$66,077**	**$5,755**	**$0**	**$9,592**	**$81,423**	**$1,629**	**$1,553**	**$1,941**
9	COOLING WATER SYSTEM													
9.1	Cooling Towers	$5,852	$0	$1,773	$0	$0	$7,626	$710	$0	$1,250	$9,587	$192	$183	$229
9.2	Circulating Water Pumps	$2,358	$0	$173	$0	$0	$2,531	$216	$0	$412	$3,159	$63	$60	$75
9.3	Circ.Water System Auxiliaries	$241	$0	$34	$0	$0	$275	$25	$0	$45	$345	$7	$7	$8
9.4	Circ.Water Piping	$0	$8,535	$2,068	$0	$0	$10,603	$889	$0	$2,298	$13,790	$276	$263	$329
9.5	Make-up Water System	$614	$0	$844	$0	$0	$1,458	$135	$0	$319	$1,912	$38	$36	$46
9.6	Component Cooling Water Sys	$1,220	$1,460	$1,002	$0	$0	$3,682	$329	$0	$802	$4,813	$96	$92	$115
9.9	Circ.Water System Foundations	$0	$3,410	$6,058	$0	$0	$9,468	$893	$0	$3,108	$13,469	$269	$257	$321
	SUBTOTAL 9.	**$10,285**	**$13,404**	**$11,953**	**$0**	**$0**	**$35,642**	**$3,198**	**$0**	**$8,235**	**$47,075**	**$942**	**$898**	**$1,122**
10	ASH/SPENT SORBENT HANDLING SYS													
10.1	Slag Dewatering & Cooling	$45,749	$0	$22,407	$0	$0	$68,157	$6,384	$0	$7,454	$81,994	$1,640	$1,564	$1,954
10.2	Gasifier Ash Depressurization	w/10.1	w/10.1	w/10.1	$0	$0	$0	$0	$0	$0	$0	$0	$0	$0
10.3	Cleanup Ash Depressurization	w/10.1	w/10.1	w/10.1	$0	$0	$0	$0	$0	$0	$0	$0	$0	$0
10.4	High Temperature Ash Piping	$0	$0	$0	$0	$0	$0	$0	$0	$0	$0	$0	$0	$0
10.5	Other Ash Recovery Equipment	$0	$0	$0	$0	$0	$0	$0	$0	$0	$0	$0	$0	$0
10.6	Ash Storage Silos	$1,381	$0	$1,493	$0	$0	$2,874	$272	$0	$472	$3,618	$72	$69	$86
10.7	Ash Transport & Feed Equipment	$1,901	$0	$444	$0	$0	$2,345	$209	$0	$383	$2,937	$59	$56	$70
10.8	Misc. Ash Handling Equipment	$2,861	$3,506	$1,040	$0	$0	$7,408	$686	$0	$1,214	$9,308	$186	$177	$222
10.9	Ash/Spent Sorbent Foundation	$0	$116	$152	$0	$0	$268	$25	$0	$88	$382	$8	$7	$9
	SUBTOTAL 10.	**$51,893**	**$3,622**	**$25,537**	**$0**	**$0**	**$81,052**	**$7,576**	**$0**	**$9,611**	**$98,239**	**$1,965**	**$1,873**	**$2,342**

Exhibit 5-1 Total plant cost summary with CO_2 sequestration (continued)

Acct		Equipment	Material	Labor		Sales	Bare Erected	Eng'g CM	Contingencies		TOTAL PLANT COST			
No.	Item/Description	Cost	Cost	Direct	Indirect	Tax	Cost $	H.O.& Fee	Process	Project	$	$/bpd	$/bpd$_{ECO}$	$/bpd$_{EPD}$
11	ACCESSORY ELECTRIC PLANT													
11.1	Generator Equipment	$837	$0	$815	$0	$0	$1,653	$153	$0	$181	$1,987	$40	$38	$47
11.2	Station Service Equipment	$7,702	$0	$708	$0	$0	$8,410	$773	$0	$918	$10,102	$202	$193	$241
11.3	Switchgear & Motor Control	$14,215	$0	$2,642	$0	$0	$16,857	$1,560	$0	$2,763	$21,180	$424	$404	$505
11.4	Conduit & Cable Tray	$0	$7,223	$22,264	$0	$0	$29,487	$2,748	$0	$8,059	$40,293	$806	$768	$960
11.5	Wire & Cable	$0	$13,926	$8,473	$0	$0	$22,398	$1,520	$0	$5,980	$29,898	$598	$570	$713
11.6	Protective Equipment	$0	$797	$2,958	$0	$0	$3,755	$361	$0	$617	$4,733	$95	$90	$113
11.7	Standby Equipment	$211	$0	$211	$0	$0	$422	$40	$0	$69	$531	$11	$10	$13
11.8	Main Power Transformers	$13,787	$0	$117	$0	$0	$13,904	$1,052	$0	$2,243	$17,200	$344	$328	$410
11.9	Electrical Foundations	$0	$123	$336	$0	$0	$460	$44	$0	$151	$654	$13	$12	$16
	SUBTOTAL 11.	**$36,753**	**$22,069**	**$38,525**	**$0**	**$0**	**$97,346**	**$8,251**	**$0**	**$20,981**	**$126,578**	**$2,532**	**$2,414**	**$3,017**
12	INSTRUMENTATION & CONTROL													
12.1	IGCC Control Equipment	w/4.1	$0	w/4.1	$0	$0	$0	$0	$0	$0	$0	$0	$0	$0
12.2	Combustion Turbine Control	w/6.1	$0	w/6.1	$0	$0	$0	$0	$0	$0	$0	$0	$0	$0
12.3	Steam Turbine Control	w/8.1	$0	w/8.1	$0	$0	$0	$0	$0	$0	$0	$0	$0	$0
12.4	Other Major Component Control	$1,428	$0	$973	$0	$0	$2,400	$225	$120	$412	$3,157	$63	$60	$75
12.5	Signal Processing Equipment	w/12.7	$0	w/12.7	$0	$0	$0	$0	$0	$0	$0	$0	$0	$0
12.6	Control Boards,Panels & Racks	$328	$0	$215	$0	$0	$543	$51	$27	$124	$745	$15	$14	$18
12.7	Computer & Accessories	$7,615	$0	$249	$0	$0	$7,864	$721	$393	$898	$9,875	$198	$188	$235
12.8	Instrument Wiring & Tubing	$0	$2,931	$5,549	$0	$0	$8,480	$686	$424	$2,398	$11,988	$240	$229	$286
12.9	Other I & C Equipment	$5,090	$0	$2,522	$0	$0	$7,612	$711	$381	$1,306	$10,009	$200	$191	$239
	SUBTOTAL 12.	**$14,461**	**$2,931**	**$9,507**	**$0**	**$0**	**$26,899**	**$2,394**	**$1,345**	**$5,137**	**$35,775**	**$716**	**$682**	**$853**
13	IMPROVEMENTS TO SITE													
13.1	Site Preparation	$0	$262	$5,948	$0	$0	$6,210	$605	$0	$2,045	$8,860	$177	$169	$211
13.2	Site Improvements	$0	$4,653	$6,578	$0	$0	$11,231	$1,114	$0	$3,704	$16,049	$321	$306	$383
13.3	Site Facilities	$8,339	$0	$9,360	$0	$0	$17,699	$1,760	$0	$5,838	$25,296	$506	$482	$603
	SUBTOTAL 13.	**$8,339**	**$4,915**	**$21,887**	**$0**	**$0**	**$35,140**	**$3,479**	**$0**	**$11,586**	**$50,205**	**$1,004**	**$957**	**$1,197**
14	BUILDINGS & STRUCTURES													
14.1	Combustion Turbine Area	$0	$317	$179	$0	$0	$496	$43	$0	$108	$647	$13	$12	$15
14.2	Steam Turbine Building	$0	$5,495	$7,822	$0	$0	$13,317	$1,200	$0	$2,178	$16,694	$334	$318	$398
14.3	Administration Building	$0	$2,275	$1,649	$0	$0	$3,924	$342	$0	$640	$4,906	$98	$94	$117
14.4	Circulation Water Pumphouse	$0	$356	$240	$0	$0	$596	$51	$0	$97	$744	$15	$14	$18
14.5	Water Treatment Buildings	$0	$954	$930	$0	$0	$1,885	$167	$0	$308	$2,359	$47	$45	$56
14.6	Machine Shop	$0	$1,164	$796	$0	$0	$1,961	$170	$0	$320	$2,451	$49	$47	$58
14.7	Warehouse	$0	$1,880	$1,213	$0	$0	$3,093	$268	$0	$504	$3,865	$77	$74	$92
14.8	Other Buildings & Structures	$0	$1,126	$876	$0	$0	$2,002	$175	$0	$435	$2,613	$52	$50	$62
14.9	Waste Treating Building & Str.	$0	$1,182	$2,257	$0	$0	$3,438	$314	$0	$750	$4,503	$90	$86	$107
	SUBTOTAL 14.	**$0**	**$14,749**	**$15,963**	**$0**	**$0**	**$30,712**	**$2,729**	**$0**	**$5,340**	**$38,781**	**$776**	**$739**	**$924**
	TOTAL COST	**$2,773,630**	**$155,535**	**$815,702**	**$0**	**$0**	**$3,744,868**	**$347,018**	**$376,059**	**$806,116**	**$5,274,060**	**$105,498**	**$100,569**	**$125,711**

Exhibit 5-1 Total plant cost summary with CO_2 sequestration (continued)

Acct		Equipment	Material	Labor		Sales	Bare Erected	Eng'g CM	Contingencies		TOTAL PLANT COST			
No.	Item/Description	Cost	Cost	Direct	Indirect	Tax	Cost $	H.O.& Fee	Process	Project	$	$/bpd	$/bpd$_{ECO}$	$/bpd$_{EPD}$
	Owner's Costs													
	Preproduction Costs													
	6 Months All Labor										$47,686	$954	$909	$1,137
	1 Month Maintenance Materials										$8,285	$166	$158	$197
	1 Month Non-fuel Consumables										$2,142	$43	$41	$51
	1 Month Waste Disposal										$1,617	$32	$31	$39
	25% of 1 Months Fuel Cost at 100% CF										$10,958	$219	$209	$261
	2% of TPC										$105,481	$2,110	$2,011	$2,514
	Total										**$176,169**	**$3,524**	**$3,359**	**$4,199**
	Inventory Capital													
	60 day supply of fuel and consumables at 100% CF										$91,311	$1,827	$1,741	$2,176
	0.5% of TPC (spare parts)										$26,370	$527	$503	$629
	Total										**$117,681**	**$2,354**	**$2,244**	**$2,805**
	Initial Cost for Catalyst and Chemicals										$29,733	$595	$567	$709
	Land										$900	$18	$17	$21
	Other Owner's Costs										$791,109	$15,825	$15,085	$18,857
	Financing Costs										$142,400	$2,848	$2,715	$3,394
	Total Overnight Costs (TOC)										**$6,532,052**	**$130,662**	**$124,557**	**$155,696**
	TASC Multiplier							(Loan Guarantees FUELS, 35 year)			1.147			
	Total As-Spent Cost (TASC)										**$7,494,877**	**$149,922**	**$142,917**	**$178,646**

Exhibit 5-2 Total operating and maintenance costs with CO_2 sequestration

INITIAL & ANNUAL O&M EXPENSES					Cost Base (Jun):	2011
Base Case 1 - Total System						
					bbl/day:	49,992
					Capacity Factor (%):	90
OPERATING & MAINTENANCE LABOR						
Operating Labor						
Operating Labor Rate(base):	39.70	$/hour				
Operating Labor Burden:	30.00	% of base				
Labor O-H Charge Rate:	25.00	% of labor				
			Total			
Operating Labor Requirements(O.J.)per Shift:	1 unit/mod.		Plant			
Skilled Operator	2.0		8.0			
Operator	10.0		40.0			
Foreman	1.0		4.0			
Lab Tech's, etc.	3.0		12.0			
TOTAL-O.J.'s	16.0		64.0			
					Annual Cost	Annual Unit Cost
					$	$/(bbl/day)
Annual Operating Labor Cost					$28,934,630	$578.785
Maintenance Labor Cost					$47,363,570	$947.423
Administrative & Support Labor					$19,074,550	$381.552
Property Taxes and Insurance					$105,481,202	$2,109.962
TOTAL FIXED OPERATING COSTS					**$200,853,953**	**$4,017.722**
VARIABLE OPERATING COSTS						
						$/bbl
Maintenance Material Cost					**$89,476,433**	**$5.44845**
Consumables	Consumption		Unit	Initial Fill		
	Initial Fill	/Day	Cost	Cost		
Water (/1000 gallons)	0	6,244	1.67	**$0**	**$3,433,490**	**$0.20907**
Chemicals		6				
MU & WT Chem. (lbs)	0	37,199	0.27	$0	$3,272,918	$0.19930
Carbon (Mercury Removal) (lb)	301,013	515	1.63	$489,217	$275,185	$0.01676
FT Catalyst (lbs)	1,010,363.60	3,532.22	7.15	$7,224,100	$8,296,378	$0.50519
Water Gas Shift Catalyst (ft3)	3,655	3	771.99	$2,821,253	$793,477	$0.04832
Methanol (tons)	1,871	45	300.00	$561,300	$4,434,750	$0.27004
Amine Solution (gal)	479,971	153	36.79	$17,658,727	$1,849,146	$0.11260
Hydrotreating Catalyst (ft^3)	772.62	0.71	700.00	$540,835	$162,187	$0.00988
Naphtha reforming catalyst (ft^3)	278.90	0.25	900.00	$251,008	$75,273	$0.00458
Isomerization Catalysts (ft^3)	373.12	0.34	500.00	$186,560	$55,946	$0.00341
Claus Catalyst (ft3)	w/equip.	7	203.15	$0	$486,163	$0.02960
Subtotal Chemicals				**$29,732,998**	**$19,701,423**	**$1.19967**
Other						
Butane (tons)	0	0	651.34	$0	$0	$0.00000
Gases, N2 etc. (/100scf)	0	0	0.00	$0	$0	$0.00000
L.P. Steam (/1000 pounds)	0	0	0.00	$0	$0	$0.00000
Subtotal Other				**$0**	**$0**	**$0.00000**
Waste Disposal						
Spent Mercury Catalyst (lb.)	0	515	0.65	$0	$110,074	$0.00670
Flyash (ton)	0	0	0.00	$0	$0	$0.00000
Slag (ton)	0	2,104	25.11	$0	$17,354,113	$1.05674
Subtotal-Waste Disposal				**$0**	**$17,464,187**	**$1.06344**
By-products & Emissions (credit)						
Sulfur (ton)	0	0	0.00	$0	$0	$0.00000
Supplemental Electricity (for sale) (MWh)	0	112	58.59	$0	($2,148,868)	-$0.13085
Subtotal By-Products				**$0**	**($2,148,868)**	**-$0.13085**
TOTAL VARIABLE OPERATING COSTS				**$29,732,998**	**$127,926,663**	**$7.78978**
Fuel (ton)	0	21,006	68.60	**$0**	**$473,377,146**	**$28.82514**

Exhibit 5-3 Total plant cost summary – CO_2 vent

	Client:	USDOE/NETL								**Report Date:**	2013-Dec-23			
	Project:	Activity 25												
						TOTAL PLANT COST SUMMARY								
	Case:	Base Case 1 - Total System												
	Plant Size:	49,992	bbl/day	**Estimate Type:**		Conceptual				**Cost Base (Jun)**	2011	($x1000)		
Acct		**Equipment**	**Material**	**Labor**		**Sales**	**Bare Erected**	**Eng'g CM**	**Contingencies**		**TOTAL PLANT COST**			
No.	**Item/Description**	**Cost**	**Cost**	**Direct**	**Indirect**	**Tax**	**Cost $**	**H.O.& Fee**	**Process**	**Project**	**$**	**$/bpd**	**$/bpd$_{ECO}$**	**$/bpd$_{EPD}$**
1	COAL & SORBENT HANDLING													
1.1	Coal Receive & Unload	$10,063	$0	$4,850	$0	$0	$14,913	$1,296	$0	$3,242	$19,451	$389	$371	$464
1.2	Coal Stackout & Reclaim	$13,003	$0	$3,109	$0	$0	$16,112	$1,368	$0	$3,496	$20,976	$420	$400	$500
1.3	Coal Conveyors & Yd Crush	$12,090	$0	$3,076	$0	$0	$15,166	$1,290	$0	$3,291	$19,747	$395	$377	$471
1.4	Other Coal Handling	$3,163	$0	$712	$0	$0	$3,875	$328	$0	$841	$5,044	$101	$96	$120
1.5	Sorbent Receive & Unload	$0	$0	$0	$0	$0	$0	$0	$0	$0	$0	$0	$0	$0
1.6	Sorbent Stackout & Reclaim	$0	$0	$0	$0	$0	$0	$0	$0	$0	$0	$0	$0	$0
1.7	Sorbent Conveyors	$0	$0	$0	$0	$0	$0	$0	$0	$0	$0	$0	$0	$0
1.8	Other Sorbent Handling	$0	$0	$0	$0	$0	$0	$0	$0	$0	$0	$0	$0	$0
1.9	Coal & Sorbent Hnd.Foundations	$0	$6,719	$17,561	$0	$0	$24,281	$2,307	$0	$5,318	$31,906	$638	$608	$760
	SUBTOTAL 1.	**$38,318**	**$6,719**	**$29,308**	**$0**	**$0**	**$74,346**	**$6,589**	**$0**	**$16,187**	**$97,122**	**$1,943**	**$1,852**	**$2,315**
2	COAL & SORBENT PREP & FEED													
2.1	Coal Crushing & Drying	$121,566	$7,331	$17,471	$0	$0	$146,368	$12,217	$0	$31,717	$190,302	$3,807	$3,629	$4,536
2.2	Prepared Coal Storage & Feed	$5,758	$1,383	$891	$0	$0	$8,032	$664	$0	$1,739	$10,435	$209	$199	$249
2.3	Dry Coal Injection System	$189,497	$2,184	$17,357	$0	$0	$209,038	$17,410	$0	$45,290	$271,738	$5,436	$5,182	$6,477
2.4	Misc.Coal Prep & Feed	$3,166	$2,313	$6,814	$0	$0	$12,293	$1,099	$0	$2,678	$16,070	$321	$306	$383
2.5	Sorbent Prep Equipment	$0	$0	$0	$0	$0	$0	$0	$0	$0	$0	$0	$0	$0
2.6	Sorbent Storage & Feed	$0	$0	$0	$0	$0	$0	$0	$0	$0	$0	$0	$0	$0
2.7	Sorbent Injection System	$0	$0	$0	$0	$0	$0	$0	$0	$0	$0	$0	$0	$0
2.8	Booster Air Supply System	$0	$0	$0	$0	$0	$0	$0	$0	$0	$0	$0	$0	$0
2.9	Coal & Sorbent Feed Foundation	$0	$11,614	$9,966	$0	$0	$21,580	$2,005	$0	$4,717	$28,301	$566	$540	$675
	SUBTOTAL 2.	**$319,987**	**$24,826**	**$52,498**	**$0**	**$0**	**$397,310**	**$33,395**	**$0**	**$86,141**	**$516,846**	**$10,339**	**$9,855**	**$12,319**
3	FEEDWATER & MISC. BOP SYSTEMS													
3.1	Feedwater System	$1,750	$3,020	$1,583	$0	$0	$6,354	$574	$0	$1,386	$8,314	$166	$159	$198
3.2	Water Makeup & Pretreating	$1,091	$113	$599	$0	$0	$1,802	$166	$0	$591	$2,559	$51	$49	$61
3.3	Other Feedwater Subsystems	$984	$325	$291	$0	$0	$1,600	$138	$0	$348	$2,085	$42	$40	$50
3.4	Service Water Systems	$638	$1,271	$4,383	$0	$0	$6,292	$598	$0	$2,067	$8,956	$179	$171	$213
3.5	Other Boiler Plant Systems	$3,436	$1,284	$3,160	$0	$0	$7,881	$718	$0	$1,720	$10,318	$206	$197	$246
3.6	FO Supply Sys & Nat Gas	$511	$966	$895	$0	$0	$2,372	$223	$0	$519	$3,113	$62	$59	$74
3.7	Waste Treatment Equipment	$1,475	$0	$914	$0	$0	$2,389	$230	$0	$786	$3,405	$68	$65	$81
3.8	Misc. Power Plant Equipment	$1,709	$228	$889	$0	$0	$2,826	$270	$0	$929	$4,025	$81	$77	$96
	SUBTOTAL 3.	**$11,594**	**$7,208**	**$12,713**	**$0**	**$0**	**$31,515**	**$2,917**	**$0**	**$8,344**	**$42,775**	**$856**	**$816**	**$1,020**

Exhibit 5-3 Total plant cost summary – CO_2 vent (continued)

Acct		Equipment	Material	Labor		Sales	Bare Erected	Eng'g CM	Contingencies		TOTAL PLANT COST			
No.	Item/Description	Cost	Cost	Direct	Indirect	Tax	Cost $	H.O.& Fee	Process	Project	$	$/bpd	$/bpd$_{ECO}$	$/bpd$_{EPD}$
4	GASIFIER & ACCESSORIES													
4.1	Gasifier, Syngas Cooler & Auxiliaries (Shell)	$699,517	$0	$301,659	$0	$0	$1,001,175	$88,113	$137,204	$188,698	$1,415,190	$28,308	$26,985	$33,732
4.2	Syngas Cooling	w/4.1	$0	w/ 4.1	$0	$0	$0	$0	$0	$0	$0	$0	$0	$0
4.3	ASU/Oxidant Compression	$551,221	$0	w/equip.	$0	$0	$551,221	$51,506	$0	$60,273	$663,000	$13,262	$12,642	$15,803
4.4	LT Heat Recovery & FG Saturation	$42,214	$0	$15,797	$0	$0	$58,011	$5,481	$0	$12,698	$76,191	$1,524	$1,453	$1,816
4.5	Misc. Gasification Equipment	w/4.1&4.2	$0	w/4.1&4.2	$0	$0	$0	$0	$0	$0	$0	$0	$0	$0
4.6	Flare Stack System	$0	$3,287	$1,328	$0	$0	$4,615	$431	$0	$1,009	$6,056	$121	$115	$144
4.8	Major Component Rigging	w/4.1&4.2	$0	w/4.1&4.2	$0	$0	$0	$0	$0	$0	$0	$0	$0	$0
4.9	Gasification Foundations	$0	$39,797	$23,734	$0	$0	$63,531	$5,856	$0	$17,347	$86,734	$1,735	$1,654	$2,067
	SUBTOTAL 4.	**$1,292,951**	**$43,084**	**$342,518**	**$0**	**$0**	**$1,678,553**	**$151,389**	**$137,204**	**$280,025**	**$2,247,170**	**$44,951**	**$42,850**	**$53,562**
5A	GAS CLEANUP & PIPING													
5A.1	Rectisol System	$217,615	$0	$176,832	$0	$0	$394,447	$37,218	$78,889	$102,111	$612,665	$12,255	$11,683	$14,603
5A.2	Elemental Sulfur Plant	$24,556	$4,786	$31,465	$0	$0	$60,808	$5,775	$0	$13,317	$79,900	$1,598	$1,524	$1,904
5A.3	Mercury Removal	$2,985	$0	$2,256	$0	$0	$5,241	$494	$262	$1,199	$7,196	$144	$137	$172
5A.4	Shift Reactors	$5,623	$0	$2,248	$0	$0	$7,870	$735	$0	$1,721	$10,327	$207	$197	$246
5A.5	Particulate Removal	w/4.1	$0	w/4.1	$0	$0	$0	$0	$0	$0	$0	$0	$0	$0
5A.6	Blowback Gas Systems	$3,633	$611	$342	$0	$0	$4,587	$423	$0	$1,002	$6,012	$120	$115	$143
5A.7	Fuel Gas Piping	$0	$1,692	$1,107	$0	$0	$2,799	$244	$0	$609	$3,652	$73	$70	$87
5A.9	HGCU Foundations	$0	$1,965	$1,324	$0	$0	$3,289	$304	$0	$1,078	$4,671	$93	$89	$111
	SUBTOTAL 5A.	**$254,412**	**$9,055**	**$215,574**	**$0**	**$0**	**$479,041**	**$45,194**	**$79,151**	**$121,037**	**$724,423**	**$14,491**	**$13,814**	**$17,267**
5AA	F-T SYNTHESIS AND PRODUCT UPGRADE													
5AA.1	FT Synthesis*	$220,380	w/equip.	w/equip.	$0	$0	$220,380	$21,156	$59,503	$75,260	$376,298	$7,527	$7,175	$8,969
5AA.2	Amine CO2 Adsorption	$15,940	w/equip.	w/equip.	$0	$0	$15,940	$1,530	$4,304	$5,444	$27,218	$544	$519	$649
5AA.3	Amine Regeneration Section	$74,538	w/equip.	w/equip.	$0	$0	$74,538	$7,156	$20,125	$25,455	$127,273	$2,546	$2,427	$3,034
5AA.4	Compression	$27,040	w/equip.	w/equip.	$0	$0	$27,040	$2,596	$7,301	$9,234	$46,171	$924	$880	$1,101
5AA.5	Hydrocarbon Recovery	$81,544	w/equip.	w/equip.	$0	$0	$81,544	$7,828	$22,017	$27,847	$139,237	$2,785	$2,655	$3,319
5AA.6	Hydrogen Recovery	$47,841	w/equip.	w/equip.	$0	$0	$47,841	$4,593	$12,917	$16,338	$81,689	$1,634	$1,558	$1,947
5AA.7	Autothermal Reformer	$0	w/equip.	w/equip.	$0	$0	$0	$0	$0	$0	$0	$0	$0	$0
5AA.8	Naphtha Hydrotreater	$5,480	w/equip.	w/equip.	$0	$0	$5,480	$526	$1,480	$1,872	$9,358	$187	$178	$223
5AA.9	Diesel Hydrotreater	$11,841	w/equip.	w/equip.	$0	$0	$11,841	$1,137	$3,197	$4,044	$20,219	$404	$386	$482
5AA.10	Wax Hydrocracker	$42,706	w/equip.	w/equip.	$0	$0	$42,706	$4,100	$11,531	$14,584	$72,921	$1,459	$1,390	$1,738
5AA.11	Raw Fuel Gas Compressor, HP	$29,451	w/equip.	w/equip.	$0	$0	$29,451	$2,746	$0	$6,440	$38,637	$773	$737	$921
5AA.12	Fuel Gas to GT Compressor, HP	$6,764	w/equip.	w/equip.	$0	$0	$6,764	$631	$0	$1,479	$8,874	$177	$169	$212
	SUBTOTAL 5AA.	**$563,527**	**$0**	**$0**	**$0**	**$0**	**$563,527**	**$53,999**	**$142,374**	**$187,995**	**$947,895**	**$18,961**	**$18,075**	**$22,594**
5B	CO2 REMOVAL & COMPRESSION													
5B.1	CO2 Removal System	$0	$0	$0	$0	$0	$0	$0	$0	$0	$0	$0	$0	$0
5B.2	CO2 Compression & Drying	$0	$0	$0	$0	$0	$0	$0	$0	$0	$0	$0	$0	$0
	SUBTOTAL 5B.	**$0**	**$0**	**$0**	**$0**	**$0**	$0	**$0**	**$0**	**$0**	**$0**	**$0**	**$0**	**$0**

Exhibit 5-3 Total plant cost summary – CO_2 vent (continued)

Acct		Equipment	Material	Labor		Sales	Bare Erected	Eng'g CM	Contingencies		TOTAL PLANT COST			
No.	Item/Description	Cost	Cost	Direct	Indirect	Tax	Cost $	H.O.& Fee	Process	Project	$	$/bpd	$/bpd$_{ECO}$	$/bpd$_{EPD}$
6	COMBUSTION TURBINE/ACCESSORIES						$0							
6.1	Combustion Turbine Generator	$42,610	$0	$3,020	$0	$0	$45,630	$10,985	$11,909	$14,199	$82,723	$1,655	$1,577	$1,972
6.2	Open	$0	$0	$0	$0	$0	$0	$0	$0	$0	$0	$0	$0	$0
6.3	Compressed Air Piping	$0	$0	$0	$0	$0	$0	$0	$0	$0	$0	$0	$0	$0
6.9	Combustion Turbine Foundations	$0	$354	$409	$0	$0	$763	$186	$0	$653	$1,603	$32	$31	$38
	SUBTOTAL 6.	**$42,610**	**$354**	**$3,429**	**$0**	**$0**	**$46,393**	**$11,171**	**$11,909**	**$14,852**	**$84,326**	**$1,687**	**$1,608**	**$2,010**
7	HRSG, DUCTING & STACK													
7.1	Heat Recovery Steam Generator	$14,626	$0	$2,833	$0	$0	$17,458	$1,619	$0	$1,908	$20,986	$420	$400	$500
7.2	Open	$0	$0	$0	$0	$0	$0	$0	$0	$0	$0	$0	$0	$0
7.3	Ductwork	$0	$1,070	$750	$0	$0	$1,819	$155	$0	$395	$2,369	$47	$45	$56
7.4	Stack	$2,064	$0	$770	$0	$0	$2,834	$265	$0	$310	$3,409	$68	$65	$81
7.9	HRSG,Duct & Stack Foundations	$0	$393	$394	$0	$0	$787	$73	$0	$258	$1,119	$22	$21	$27
	SUBTOTAL 7.	**$16,690**	**$1,463**	**$4,747**	**$0**	**$0**	**$22,899**	**$2,112**	**$0**	**$2,871**	**$27,882**	**$558**	**$532**	**$665**
8	STEAM TURBINE GENERATOR													
8.1	Steam TG & Accessories	$42,612	$0	$6,707	$0	$0	$49,319	$4,344	$0	$5,366	$59,029	$1,181	$1,126	$1,407
8.2	Turbine Plant Auxiliaries	$281	$0	$640	$0	$0	$921	$88	$0	$101	$1,110	$22	$21	$26
8.3	Condenser & Auxiliaries	$3,090	$0	$1,499	$0	$0	$4,589	$430	$0	$502	$5,521	$110	$105	$132
8.4	Steam Piping	$7,924	$0	$3,436	$0	$0	$11,360	$869	$0	$3,057	$15,287	$306	$291	$364
8.9	TG Foundations	$0	$1,325	$2,340	$0	$0	$3,665	$346	$0	$1,203	$5,214	$104	$99	$124
	SUBTOTAL 8.	**$53,907**	**$1,325**	**$14,623**	**$0**	**$0**	**$69,854**	**$6,076**	**$0**	**$10,230**	**$86,160**	**$1,723**	**$1,643**	**$2,054**
9	COOLING WATER SYSTEM													
9.1	Cooling Towers	$5,530	$0	$1,676	$0	$0	$7,206	$671	$0	$1,182	$9,058	$181	$173	$216
9.2	Circulating Water Pumps	$2,227	$0	$164	$0	$0	$2,391	$204	$0	$389	$2,984	$60	$57	$71
9.3	Circ.Water System Auxiliaries	$228	$0	$32	$0	$0	$260	$24	$0	$43	$327	$7	$6	$8
9.4	Circ.Water Piping	$0	$8,107	$1,964	$0	$0	$10,070	$844	$0	$2,183	$13,098	$262	$250	$312
9.5	Make-up Water System	$582	$0	$801	$0	$0	$1,383	$128	$0	$302	$1,813	$36	$35	$43
9.6	Component Cooling Water Sys	$1,156	$1,383	$949	$0	$0	$3,488	$312	$0	$760	$4,560	$91	$87	$109
9.9	Circ.Water System Foundations	$0	$3,243	$5,763	$0	$0	$9,007	$850	$0	$2,957	$12,813	$256	$244	$305
	SUBTOTAL 9.	**$9,724**	**$12,733**	**$11,349**	**$0**	**$0**	**$33,805**	**$3,033**	**$0**	**$7,815**	**$44,653**	**$893**	**$851**	**$1,064**
10	ASH/SPENT SORBENT HANDLING SYS													
10.1	Slag Dewatering & Cooling	$45,749	$0	$22,407	$0	$0	$68,157	$6,384	$0	$7,454	$81,994	$1,640	$1,563	$1,954
10.2	Gasifier Ash Depressurization	w/10.1	w/10.1	w/10.1	$0	$0	$0	$0	$0	$0	$0	$0	$0	$0
10.3	Cleanup Ash Depressurization	w/10.1	w/10.1	w/10.1	$0	$0	$0	$0	$0	$0	$0	$0	$0	$0
10.4	High Temperature Ash Piping	$0	$0	$0	$0	$0	$0	$0	$0	$0	$0	$0	$0	$0
10.5	Other Ash Recovery Equipment	$0	$0	$0	$0	$0	$0	$0	$0	$0	$0	$0	$0	$0
10.6	Ash Storage Silos	$1,381	$0	$1,493	$0	$0	$2,874	$272	$0	$472	$3,618	$72	$69	$86
10.7	Ash Transport & Feed Equipment	$1,901	$0	$444	$0	$0	$2,345	$209	$0	$383	$2,937	$59	$56	$70
10.8	Misc. Ash Handling Equipment	$2,861	$3,506	$1,040	$0	$0	$7,408	$686	$0	$1,214	$9,308	$186	$177	$222
10.9	Ash/Spent Sorbent Foundation	$0	$116	$152	$0	$0	$268	$25	$0	$88	$382	$8	$7	$9
	SUBTOTAL 10.	**$51,893**	**$3,622**	**$25,537**	**$0**	**$0**	**$81,052**	**$7,576**	**$0**	**$9,611**	**$98,239**	**$1,965**	**$1,873**	**$2,342**

Exhibit 5-3 Total plant cost summary – CO_2 vent (continued)

Acct		Equipment	Material	Labor		Sales	Bare Erected	Eng'g CM	Contingencies		TOTAL PLANT COST			
No.	Item/Description	Cost	Cost	Direct	Indirect	Tax	Cost $	H.O.& Fee	Process	Project	$	$/bpd	$/bpd$_{ECO}$	$/bpd$_{EPD}$
11	ACCESSORY ELECTRIC PLANT													
11.1	Generator Equipment	$889	$0	$866	$0	$0	$1,755	$163	$0	$192	$2,110	$42	$40	$50
11.2	Station Service Equipment	$7,322	$0	$673	$0	$0	$7,996	$735	$0	$873	$9,604	$192	$183	$229
11.3	Switchgear & Motor Control	$13,515	$0	$2,512	$0	$0	$16,027	$1,483	$0	$2,626	$20,136	$403	$384	$480
11.4	Conduit & Cable Tray	$0	$6,867	$21,168	$0	$0	$28,034	$2,613	$0	$7,662	$38,309	$766	$730	$913
11.5	Wire & Cable	$0	$13,240	$8,055	$0	$0	$21,295	$1,445	$0	$5,685	$28,425	$569	$542	$678
11.6	Protective Equipment	$0	$797	$2,958	$0	$0	$3,755	$361	$0	$617	$4,733	$95	$90	$113
11.7	Standby Equipment	$222	$0	$221	$0	$0	$443	$42	$0	$73	$558	$11	$11	$13
11.8	Main Power Transformers	$14,819	$0	$126	$0	$0	$14,945	$1,131	$0	$2,411	$18,487	$370	$353	$441
11.9	Electrical Foundations	$0	$133	$361	$0	$0	$494	$47	$0	$162	$703	$14	$13	$17
	SUBTOTAL 11.	**$36,767**	**$21,036**	**$36,940**	**$0**	**$0**	**$94,744**	**$8,019**	**$0**	**$20,302**	**$123,065**	**$2,462**	**$2,347**	**$2,933**
12	INSTRUMENTATION & CONTROL													
12.1	IGCC Control Equipment	w/4.1	$0	w/4.1	$0	$0	$0	$0	$0	$0	$0	$0	$0	$0
12.2	Combustion Turbine Control	w/6.1	$0	w/6.1	$0	$0	$0	$0	$0	$0	$0	$0	$0	$0
12.3	Steam Turbine Control	w/8.1	$0	w/8.1	$0	$0	$0	$0	$0	$0	$0	$0	$0	$0
12.4	Other Major Component Control	$1,406	$0	$958	$0	$0	$2,364	$222	$118	$406	$3,109	$62	$59	$74
12.5	Signal Processing Equipment	w/12.7	$0	w/12.7	$0	$0	$0	$0	$0	$0	$0	$0	$0	$0
12.6	Control Boards,Panels & Racks	$323	$0	$211	$0	$0	$535	$50	$27	$122	$734	$15	$14	$17
12.7	Computer & Accessories	$7,500	$0	$245	$0	$0	$7,745	$710	$387	$884	$9,726	$195	$185	$232
12.8	Instrument Wiring & Tubing	$0	$2,887	$5,465	$0	$0	$8,352	$676	$418	$2,361	$11,806	$236	$225	$281
12.9	Other I & C Equipment	$5,013	$0	$2,484	$0	$0	$7,497	$700	$375	$1,286	$9,858	$197	$188	$235
	SUBTOTAL 12.	**$14,242**	**$2,887**	**$9,363**	**$0**	**$0**	**$26,491**	**$2,358**	**$1,325**	**$5,059**	**$35,233**	**$705**	**$672**	**$840**
13	IMPROVEMENTS TO SITE													
13.1	Site Preparation	$0	$262	$5,948	$0	$0	$6,210	$605	$0	$2,045	$8,860	$177	$169	$211
13.2	Site Improvements	$0	$4,653	$6,578	$0	$0	$11,231	$1,114	$0	$3,704	$16,049	$321	$306	$383
13.3	Site Facilities	$8,339	$0	$9,360	$0	$0	$17,699	$1,760	$0	$5,838	$25,296	$506	$482	$603
	SUBTOTAL 13.	**$8,339**	**$4,915**	**$21,887**	**$0**	**$0**	**$35,140**	**$3,479**	**$0**	**$11,586**	**$50,205**	**$1,004**	**$957**	**$1,197**
14	BUILDINGS & STRUCTURES													
14.1	Combustion Turbine Area	$0	$317	$179	$0	$0	$496	$43	$0	$108	$647	$13	$12	$15
14.2	Steam Turbine Building	$0	$5,495	$7,822	$0	$0	$13,317	$1,200	$0	$2,178	$16,694	$334	$318	$398
14.3	Administration Building	$0	$2,275	$1,649	$0	$0	$3,924	$342	$0	$640	$4,906	$98	$94	$117
14.4	Circulation Water Pumphouse	$0	$352	$234	$0	$0	$586	$50	$0	$95	$732	$15	$14	$17
14.5	Water Treatment Buildings	$0	$896	$874	$0	$0	$1,770	$157	$0	$289	$2,216	$44	$42	$53
14.6	Machine Shop	$0	$1,164	$796	$0	$0	$1,961	$170	$0	$320	$2,451	$49	$47	$58
14.7	Warehouse	$0	$1,880	$1,213	$0	$0	$3,093	$268	$0	$504	$3,865	$77	$74	$92
14.8	Other Buildings & Structures	$0	$1,126	$876	$0	$0	$2,002	$175	$0	$435	$2,613	$52	$50	$62
14.9	Waste Treating Building & Str.	$0	$1,172	$2,239	$0	$0	$3,411	$311	$0	$744	$4,467	$89	$85	$106
	SUBTOTAL 14.	**$0**	**$14,678**	**$15,883**	**$0**	**$0**	**$30,560**	**$2,716**	**$0**	**$5,313**	**$38,590**	**$772**	**$736**	**$920**
	TOTAL COST	**$2,714,962**	**$153,903**	**$796,368**	**$0**	**$0**	**$3,665,233**	**$340,021**	**$371,963**	**$787,368**	**$5,164,585**	**$103,308**	**$98,480**	**$123,101**

Exhibit 5-3 Total plant cost summary – CO_2 vent (continued)

Acct		Equipment	Material	Labor		Sales	Bare Erected	Eng'g CM	Contingencies		TOTAL PLANT COST			
No.	Item/Description	Cost	Cost	Direct	Indirect	Tax	Cost $	H.O.& Fee	Process	Project	$	$/bpd	$/bpd$_{ECO}$	$/bpd$_{EPD}$
	Owner's Costs													
	Preproduction Costs													
	6 Months All Labor										$47,057	$941	$897	$1,122
	1 Month Maintenance Materials										$8,109	$162	$155	$193
	1 Month Non-fuel Consumables										$2,068	$41	$39	$49
	1 Month Waste Disposal										$1,617	$32	$31	$39
	25% of 1 Months Fuel Cost at 100% CF										$10,958	$219	$209	$261
	2% of TPC										$103,292	$2,066	$1,970	$2,462
	Total										**$173,100**	**$3,463**	**$3,301**	**$4,126**
	Inventory Capital													
	60 day supply of fuel and consumables at 100% CF										$91,216	$1,825	$1,739	$2,174
	0.5% of TPC (spare parts)										$25,823	$517	$492	$616
	Total										**$117,039**	**$2,341**	**$2,232**	**$2,790**
	Initial Cost for Catalyst and Chemicals										$29,005	$580	$553	$691
	Land										$900	$18	$17	$21
	Other Owner's Costs										$774,688	$15,496	$14,772	$18,465
	Financing Costs										$139,444	$2,789	$2,659	$3,324
	Total Overnight Costs (TOC)										**$6,398,760**	**$127,996**	**$122,014**	**$152,518**
	TASC Multiplier							(Loan Guarantees FUELS, 35 year)			1.147			
	Total As-Spent Cost (TASC)										**$7,341,938**	**$146,862**	**$139,999**	**$174,999**

Exhibit 5-4 Total operating and maintenance costs – CO_2 vent

INITIAL & ANNUAL O&M EXPENSES					Cost Base (Jun):	2011
Base Case 1 - Total System						
					bbl/day:	49,992
					Capacity Factor (%):	90
OPERATING & MAINTENANCE LABOR						
Operating Labor						
Operating Labor Rate(base):	39.70	$/hour				
Operating Labor Burden:	30.00	% of base				
Labor O-H Charge Rate:	25.00	% of labor				
			Total			
Operating Labor Requirements(O.J.)per Shift:	1 unit/mod.		Plant			
Skilled Operator	2.0		8.0			
Operator	10.0		40.0			
Foreman	1.0		4.0			
Lab Tech's, etc.	3.0		12.0			
TOTAL-O.J.'s	16.0		64.0			
					Annual Cost	Annual Unit Cost
					$	$/(bbl/day)
Annual Operating Labor Cost					$28,934,630	$578.785
Maintenance Labor Cost					$46,356,386	$927.276
Administrative & Support Labor					$18,822,754	$376.515
Property Taxes and Insurance					$103,291,707	$2,066.165
TOTAL FIXED OPERATING COSTS					**$197,405,478**	**$3,948.741**
VARIABLE OPERATING COSTS						
						$/bbl
Maintenance Material Cost					**$87,573,721**	**$5.33259**
Consumables	Consumption		Unit	Initial Fill		
	Initial Fill	/Day	Cost	Cost		
Water (/1000 gallons)	0	5,717	1.67	**$0**	**$3,143,709**	**$0.19143**
Chemicals		6				
MU & WT Chem. (lbs)	0	34,059	0.27	$0	$2,996,689	$0.18248
Carbon (Mercury Removal) (lb)	301,013	515	1.63	$489,217	$275,185	$0.01676
F-T Catalyst (lb)	1,010,363.60	3,532.22	7.15	$7,224,100	$8,296,378	$0.50519
Water Gas Shift Catalyst (ft3)	3,655	3	771.99	$2,821,253	$793,477	$0.04832
Methanol (tons)	1,871	45	300.00	$561,300	$4,434,751	$0.27004
Amine Solution (gal)	460,177	147	36.79	$16,930,492	$1,772,888	$0.10796
Hydrotreating Catalyst (ft^3)	772.62	0.71	700.00	$540,835	$162,187	$0.00988
Naphtha reforming catalyst (ft^3)	278.90	0.25	900.00	$251,008	$75,273	$0.00458
Isomerization Catalysts (ft^3)	373.12	0.34	500.00	$186,560	$55,946	$0.00341
Claus Catalyst (ft3)	w/equip.	5	203.15	$0	$325,539	$0.01982
Subtotal Chemicals				**$29,004,764**	**$19,188,314**	**$1.16843**
Other						
Butane (tons)	0	0	651.34	$0	$0	$0.00000
Gases, N2 etc. (/100scf)	0	0	0.00	$0	$0	$0.00000
L.P. Steam (/1000 pounds)	0	0	0.00	$0	$0	$0.00000
Subtotal Other				**$0**	**$0**	**$0.00000**
Waste Disposal						
Spent Mercury Catalyst (lb.)	0	515	0.65	$0	$110,074	$0.00670
Flyash (ton)	0	0	0.00	$0	$0	$0.00000
Slag (ton)	0	2,104	25.11	$0	$17,354,113	$1.05674
Subtotal-Waste Disposal				**$0**	**$17,464,187**	**$1.06344**
By-products & Emissions (credit)						
Sulfur (ton)	0	0	0.00	$0	$0	$0.00000
Supplemental Electricity (for sale) (MWh)	0	2,330	58.59	$0	($44,844,463)	-$2.73069
Subtotal By-Products				**$0**	**($44,844,463)**	**-$2.73069**
TOTAL VARIABLE OPERATING COSTS				**$29,004,764**	**$82,525,467**	**$5.02519**
Fuel (ton)	0	21,006	68.60	**$0**	**$473,377,146**	**$28.82514**

5.2 Cost of Production

Two financial structures were examined that reflect a hypothetical future in which technical risk has been partially mitigated by the demonstration of two or three commercial-scale CTL plants. The first is assumed to have no government incentives (commercial fuels) while moderate government incentives – in the form of a government loan guarantee – are assumed to be available under the second. Both scenarios face a high degree of market risk because of the volatile nature of energy prices, especially the world oil price. The TOC, TASC, and annual O&M costs were estimated based on plant performance and a 90 percent capacity factor (CF). The COP under each financial scenario structure were calculated. The results are presented in Exhibit 5-5. These costs include a credit of $60/MWh for excess power generated. These values are consistent with those expected in an environment after a carbon regulatory framework has been established. The electricity credit accounts for less than 0.5 percent of the total COP in the sequestration case and less than 2.5 percent of the total COP in the vent case, as shown in Exhibit 5-6, any change in the assumed price would have very little impact on the overall COP values calculated.

Exhibit 5-7 provides the TOC per F-T bbl, ECO bbl, and EPD bbl values for each case for ease of comparison.

Exhibit 5-5 Cost estimation results summary (CO_2 sequestration)

	CO_2 Venting Case		CO_2 Sequestration Case	
	Commercial Fuels	Loan Guarantees	Commercial Fuels	Loan Guarantees
Total Overnight Cost, $1000	6,398,760		6,532,052	
Total Overnight Cost, $/bpd	127,996		130,662	
Total Overnight Cost, $/bpd$_{ECO}$	122,014		124,557	
Total Overnight Cost, $/bpd$_{EPD}$	152,518		155,696	
Total As Spent Cost, $1000	7,558,216	7,341,938	7,715,660	7,494,877
Total As Spent Cost, $/bpd	151,189	146,862	154,338	149,922
Total As Spent Cost, $/bpd$_{ECO}$	144,123	139,999	147,127	142,917
Total As Spent Cost, $/bpdl$_{EPD}$	180,154	174,999	183,908	178,646
Total annual fixed O&M, $1000	197,405	197,405	200,854	200,854
Total annual variable O&M (90% CF), $1000	127,370	127,370	130,076	130,076
Total annual feedstock cost (90% CF), $1000	473,377	473,377	473,377	473,377
Total annual power credit (90% CF), $1000	-44,844	-44,844	-2,149	-2,149
COP F-T Diesel, $/bbl$_{FTD}$	143.7	123.1	154.2	133.2
COP F-T Naphtha, $/bbl$_{FTN}$	100.1	85.8	107.4	92.8
Equivalent Crude Oil Price, $/bbl$_{ECO}$	124.7	106.9	133.8	115.6
Equivalent Petroleum Diesel Price, $/bbl$_{EPD}$	155.9	133.6	167.2	144.5

All costs in June 2011 dollars.

Exhibit 5-6 COP sensitivity to market price of electricity

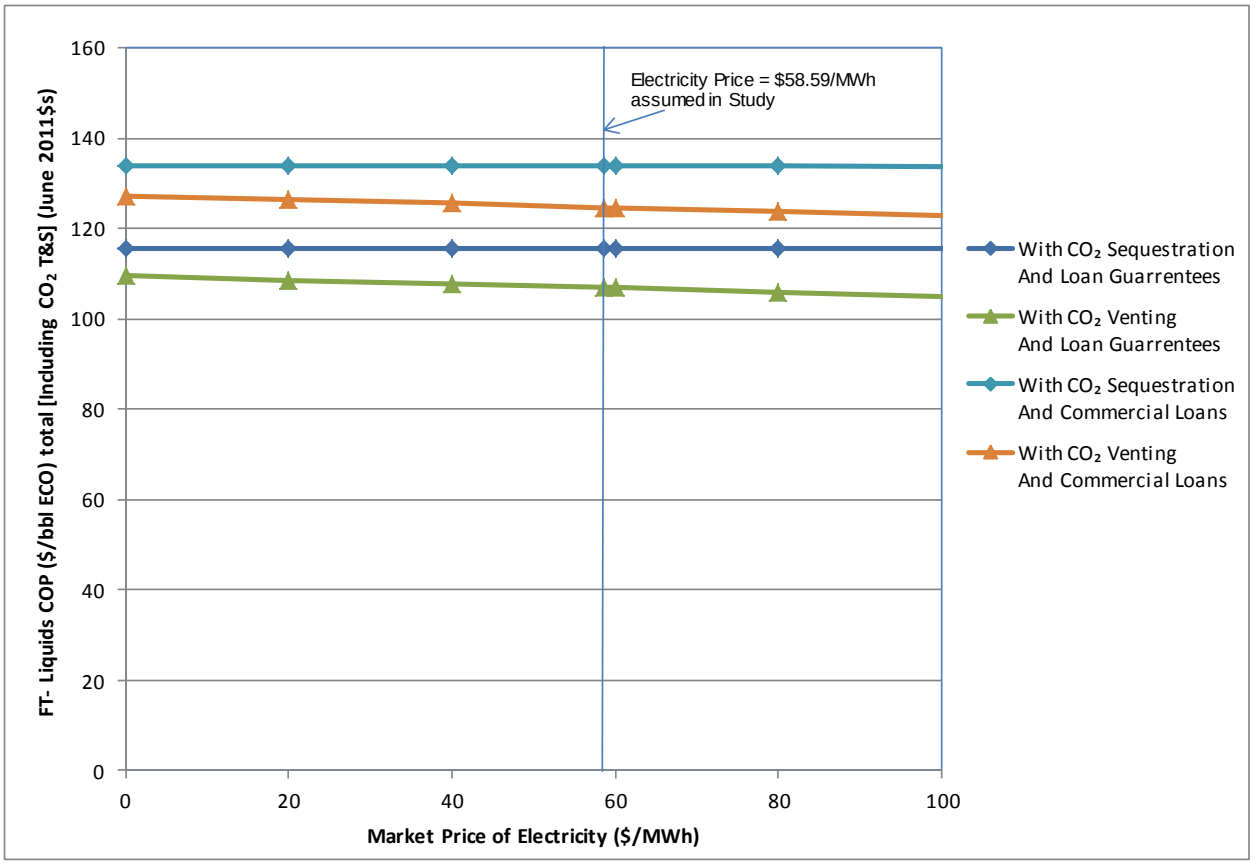

Exhibit 5-7 Comparison of TOC per F-T bbl, ECO bbl, and EPD bbl

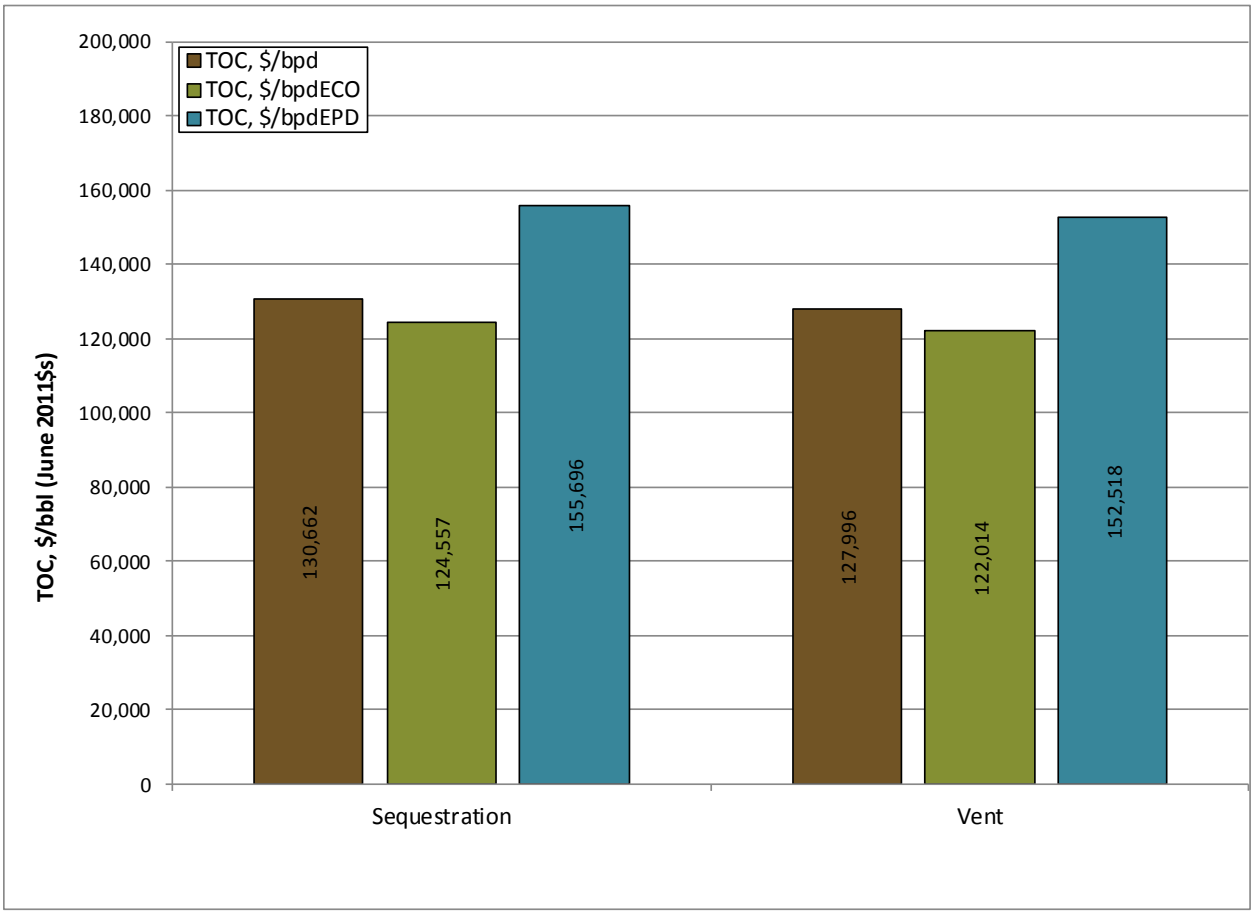

Source: NETL

Exhibit 5-8 provides a chart that demonstrates the sensitivity of the cost of production of FT-Liquids to the capital charge factor. The capital charge factors (CCF) correlate with various finance structures, as pointed out in the chart, with high-risk investor owned utility (IOU) having a CCF of 0.124, loan guarantees having a CCF of 0.170, commercial fuels having a CCF of 0.218 and 100 percent equity at 20 percent internal rate of return on equity (IRROE) having a CCF of 0.350.

Exhibit 5-8 FT-Liquids COP sensitivity to CCF

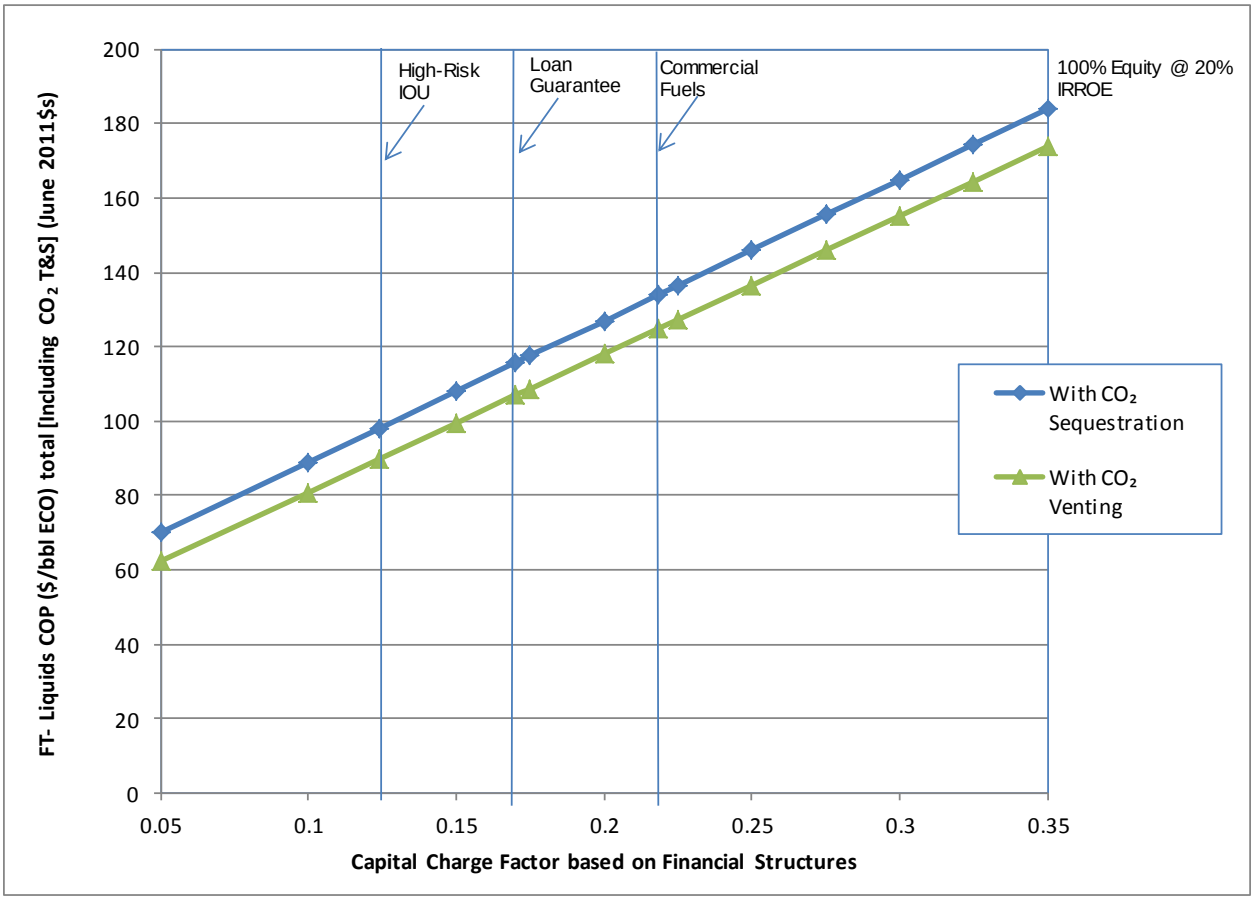

Source: NETL

5.3 Cost of Carbon Capture

The base case F-T process with carbon sequestration was compared to the case where CO_2 was vented. In the vent case the partial shift and carbon separation from syngas using Rectisol® was kept to maintain the H_2/CO ratio fed to F-T reactor as was the amine-based tail gas CO_2 capture system to prevent the build-up of inerts in the recycle loop. However, the WGS reactors and amine-based capture process were removed from the fuel gas stream as was the CO_2 compressors, pipeline, and cost of sequestration. Exhibit 5-9 summarizes the additional costs due to carbon capture.

The cost of capture was calculating using the following equation:

Cost of Carbon Capture = $(A - B)/\left(\frac{C}{D}\right)$

Where: A = Cost of production for Fischer Tropsch Diesel with sequestration ($\$/bbl_{FTD}$)

B = Cost of production for Fischer Tropsch Diesel without sequestration ($\$/bbl_{FTD}$)

C = Rate of CO_2 sequestration (tonne/day)

D = Sum of total diesel daily production and adjusted total naphtha production. Naphtha is adjusted by a factor of 0.70 to account for lower value.

Exhibit 5-9 Cost summary of CTL facility with and without CCS

	Vent Case	Sequestration Case	Cost of adding CCS (delta)
Total Overnight Cost, $1000	6,398,760	6,532,052	133,292
Total annual fixed O&M, $1000	197,405	200,854	3,448
Total annual variable O&M (90% CF), $1000	127,370	130,076	2,706
Total annual fuel cost (90% CF), $1000	473,377	473,377	0
COP F-T Diesel*, $\$/bbl_{FTD}$	123.1 [143.7]	133.2 [154.2]	10.1 [10.5]
COP F-T Naphtha*, $\$/bbl_{FTN}$	85.8 [100.1]	92.8 [107.4]	7.0 [7.3]
Equivalent Crude Oil Price*, $\$/bbl_{ECO}$	106.9 [124.7]	115.6 [133.8]	8.7 [9.1]
Equivalent Petroleum Diesel Price*, $\$/bbl_{EPD}$	133.6 [155.9]	144.5 [167.2]	10.9 [11.3]
Cost of Carbon Capture*, $/Tonne	N/A	19.11 [19.94]	19.11 [19.94]

** Values are shown for two financial structures. The first (lower) value is based on the loan guarantee finance structure. The second (higher/bracketed) value is based on the commercial fuels finance structure.*

All costs in June 2011 dollars.

6 Conclusions and Recommendations

6.1 Conclusions

Developing an alternative source of liquid fuels using coal as the carbon input has national security implications and economic consequences. The results of this study show that liquid fuels produced from a 50,000 bbl/day coal-based F-T plant (low temperature, iron-based catalyst) are more expensive than fuels produced conventionally from crude oil at today's oil prices (about $98/barrel, WTI average in 2013). Government incentives in the form of loan guarantees significantly reduce the cost of F-T liquids, but not to less than current fuel prices derived from crude oil. The two cases examined in this study, one with CO_2 captured and one with CO_2 vented, have ECO prices of $134/bbl and $125/bbl, respectively, using the commercial fuels financing structure. Government loan guarantees reduce the ECO price for the same two cases to $116/bbl and $107/bbl, respectively. Barring a dramatic shift in the oil market, and given the extremely large capital investment required for these CTL plants (on the order of $6.5 billion TOC), loan guarantees will likely be required to incentivize project development.

CO_2 capture is an inherent part of the F-T process resulting in two point sources: from the shifted syngas via the Rectisol process and from the F-T tail gas via an amine-based process. In the vent case, CO_2 from these two sources was released to the atmosphere. In the sequestration case, CO_2 from these two sources was compressed to 2,214 psia along with additional CO_2 captured from the combined cycle power section. The incremental cost of adding this capture and compression for sequestration is about $9/bbl (ECO price) independent of the financing structure used.

6.2 Recommendations for Further Study

Suggestions for future work include:

- Evaluate plant performance and economics using different coal types (subbituminous and lignite).
- Perform a detailed water usage analysis of the facility to determine more accurately the water makeup and discharge rates. Also determine the best means for minimizing water usage.
- Perform a literature search to identify ways of reducing nitrogen and argon concentration in syngas to reduce recycle load to the F-T reactor.

7 References

1 "Baseline Technical and Economic Assessment of a Commercial Scale Fischer-Tropsch Liquids Facility," DOE/NETL-2007/1260, Final Report for Subtask 41817.401.08.001, National Energy Technology Laboratory. April 2007. Available at: http://netl.doe.gov/research/energy-analysis/publications/details?pub=c0067f0f-422d-4a28-ba34-46025b4ce0c0

2 Tarka, T. J., et al. "Affordable, Low-Carbon Diesel Fuel from Domestic Coal and Biomass," DOE/NETL-2009/1349, National Energy Technology Laboratory, Pittsburgh, PA. January 2009. Available at: http://www.netl.doe.gov/File%20Library/Research/Energy%20Analysis/Coal/CBTL-Final-Report.pdf

3 Research and Development Solutions, LLC (RDS). "Design Basis: Market Based Advanced Coal Power Systems Comparison Study," Revision 4, November 2005.

4 "Standards of Performance for Electric Utility Steam Generating Units for Which Construction Commenced after September 18, 1978," 40 CFR 60, Subpart Da.

5 National Energy Technology Laboratory. "Quality Guidelines for Energy System Studies: Carbon Dioxide Transport and Storage Costs in NETL Studies." September 2013.

6 National Energy Technology Laboratory (NETL). (2011). QGESS: Cost Estimation Methodology for NETL Assessments of Power Plant Performance. Energy Analysis Publications: Details. Retrieved on March 16, 2012, from http://www.netl.doe.gov/research/energy-analysis/quality-guidelines-qgess

7 National Energy Technology Laboratory (NETL). (2011). QGESS: Technology Learning Curve (FOAK to NOAK). Energy Analysis Publications: Details. Retrieved on September 16, 2013, from http://www.netl.doe.gov/research/energy-analysis/quality-guidelines-qgess

8 NETL. "Cost and Performance Baseline for Fossil Energy Plants, Volume 1: Bituminous Coal and Natural Gas to Electricity". DOE/NETL-2010/1397, Final Report. November 2010 Available at: http://www.netl.doe.gov/File%20Library/Research/Energy%20Analysis/OE/BitBase_FinRep_Rev2a-3_20130919_1.pdf

9 AACE (formerly Advancement of Cost Engineering International) (2005) *Cost Estimate Classification System – As Applied in Engineering, Procurement, and Construction for the Process Industries; TCM Framework 7.3 – Cost Estimating and Budgeting*, AACE International Recommended Practice No. 18R-97, 2005, Rev. November 29, 2011 Retrieved on April 8, 2013 from http://www.aacei.org/non/rps/18R-97.pdf

10 Advancement of Cost Engineering (AACE) International. (2003) *Conducting Technical and Economic Evaluations – as Applied for the Process and Utility Industries TCM Framework: 3.2 – Asset Planning, 3.3 – Investment Decision Making*, AACE

International Recommended Practice No. 16R-90, 2003.
Retrieved on April 8, 2013 from http://www.aacei.org/non/rps/16R-90.pdf

11 NETL Power Systems Financial Model Version 5.0, December 2008. User Guide available at http://www.netl.doe.gov/research/energy-analysis/publications/listing?progcat=all

12 Wimer, J. *Recommended Project Finance Structures for the Economic Analysis of Fossil-Based Energy Projects.* September 2008.

13 Tarka, T. *Polygeneration of Fischer-Tropsch Diesel Fuel and Electricity from Coal* U.S. Department of Energy, National Energy Technology Laboratory. August 2010.

14 Stefan Rabe, Thanh-Binh, Truong, et al. *Low Temperature Catalytic Partial Oxidation of Methane for Gas-to-Liquids applications.* s.l. : Elsevier, applied catalysts, 2005.

15 ASTM, *TABLE X5.1 Tenth Percentile Minimum Ambient Air Temperatures for the United States (except Hawaii)*, American National Standard Designation: D 975 – 07, 2007.

16 Worldwide Fuel Charter Committee, *World Wide Fuel Charter, Fifth Edition*, 2013.