Dynamic Interactions in the Power Electronics-based Systems caused by the Phase-locked Loops (PLL)

Dong Dong, Igor Cvetkovic, Bo Wen, Dushan Boroyevich, Paolo Mattavelli, Fred C. Lee and Rolando Burgos

Virginia Tech CPES Center for Power Electronics Systems

GTC NETL-RUA Regional University Alliance

Scope of Work

Explore functionality and performance of the bidirectional three-phase *ac-dc* microgrid-interface converter for the medium/high voltage applications, through the functional average modeling.

WECC 9 bus (Benchmark System)

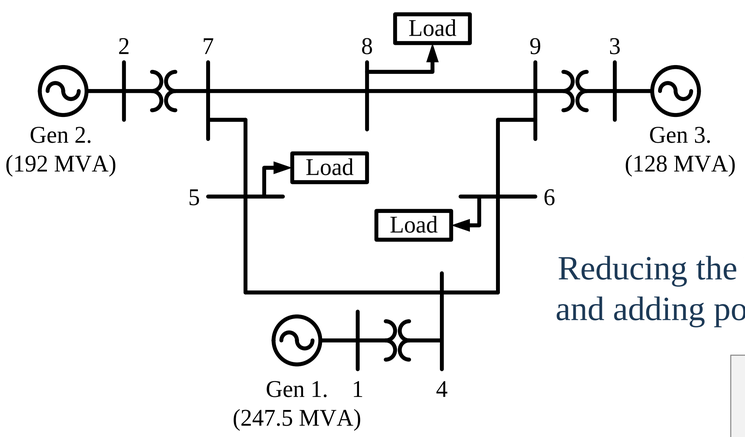

Reducing the WECC system and adding power converters

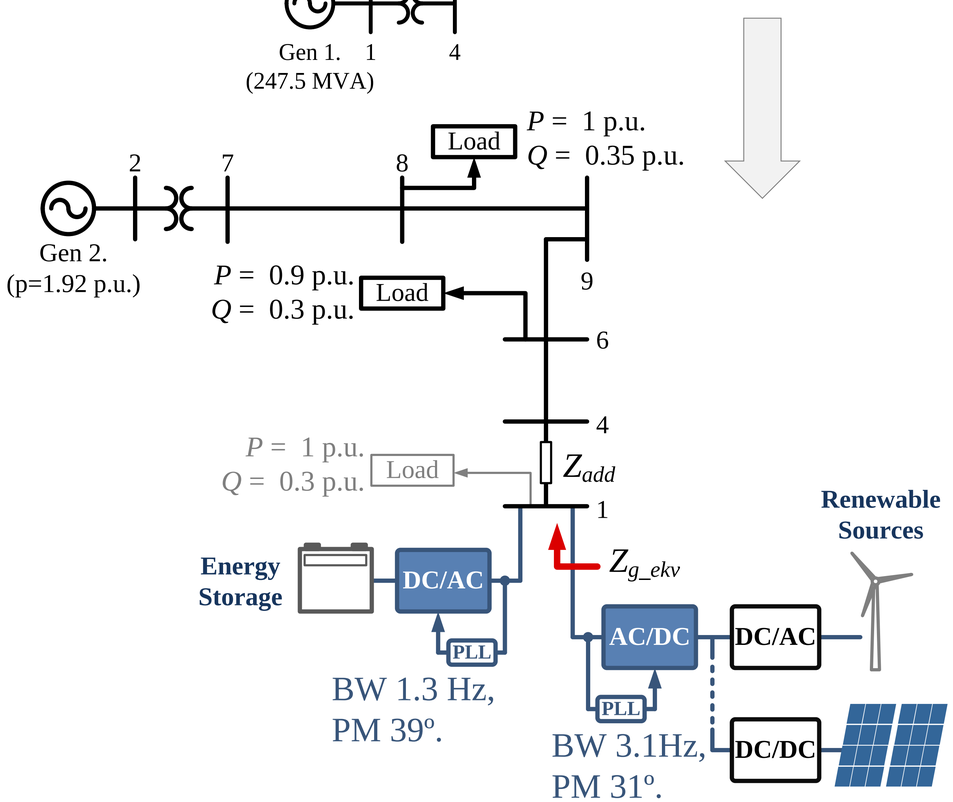

PLL Model with Grid Impedance

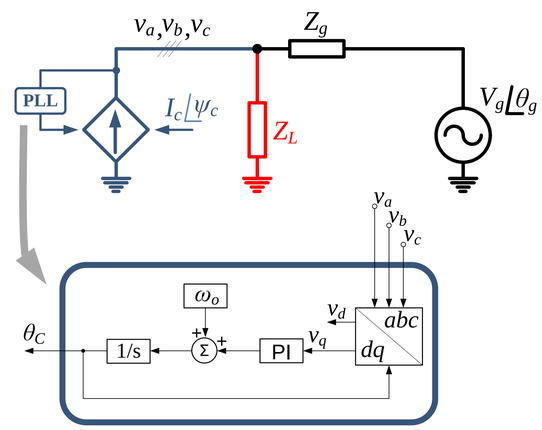

Negative Feedback Loop

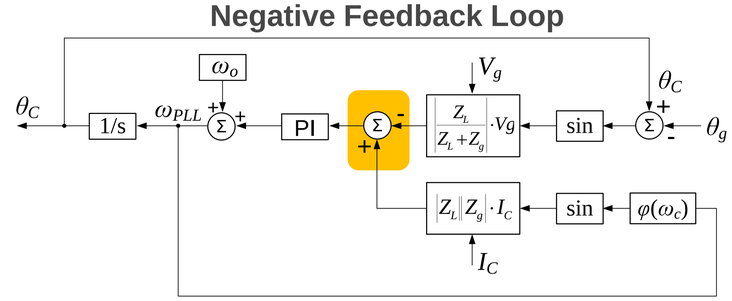

Positive Feedback Loop

Condition for the stable operation (before the positive feedback loop becomes dominant):

$$I_C < \frac{V_g}{\left|\sin(\varphi(\omega_C)) \cdot Z_g\right|}$$

PLL-caused Instability

Equivalent output impedance of the reduced WECC system – Z_{g_ekv}

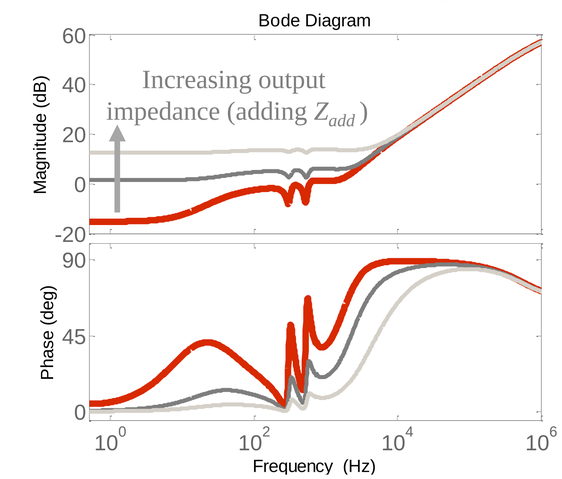

Moment when load (WECC) output impedance increases

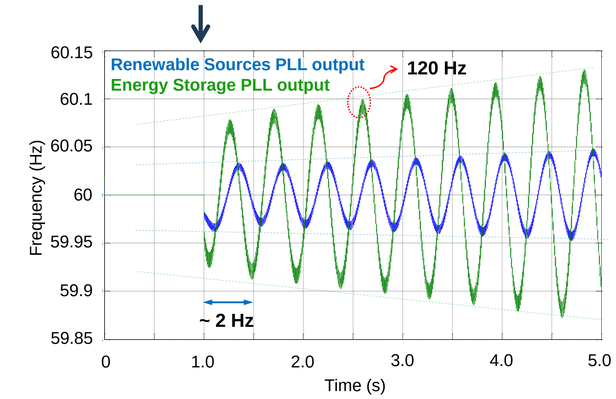
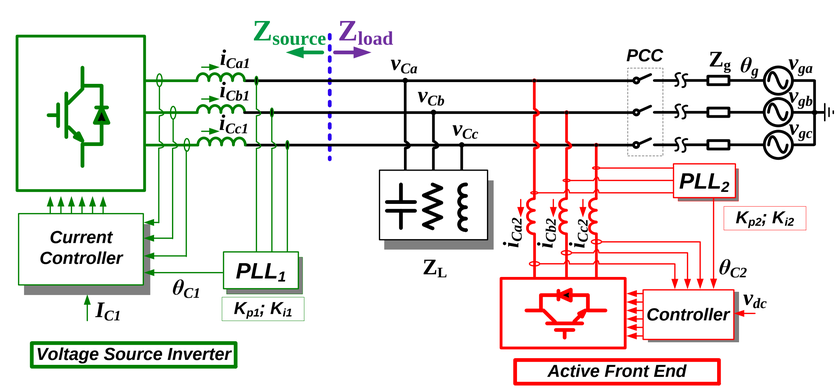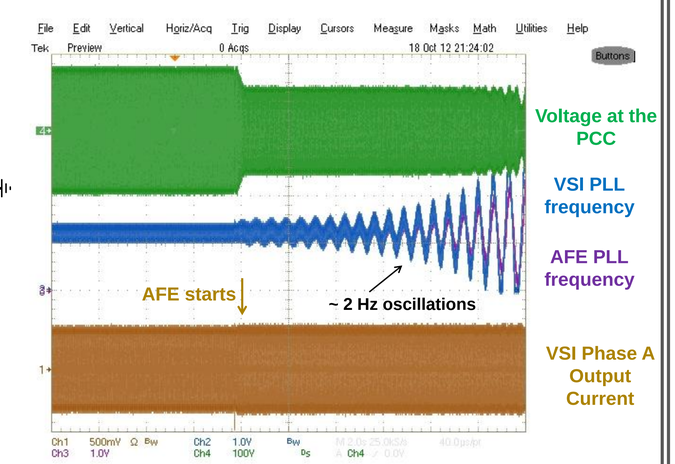
Experimental verification