Contract No. DE-FC22-90PC90548

Operations and Post-LIFAC Tests Environmental Monitoring Report

LIFAC Sorbent Injection Desulfurization Demonstration Project

Presented By

LIFAC North America, Inc.

A Joint Venture Between

ICF KAISER ENGINEERS

Four Gateway Center
Pittsburgh, Pennsylvania 15222

Tampella power

2300 Windy Ridge Parkway
Marietta, Georgia 30067

Presented To

U.S. Department of Energy

Pittsburgh Energy Technology Center
Pittsburgh, Pennsylvania 15236

TABLE OF CONTENTS

Section		*Page*
1.0	INTRODUCTION	1
2.0	TECHNOLOGY DESCRIPTION	4
3.0	LIFAC TEST PARAMETERS	6
4.0	METHODOLOGIES	8
5.0	RESULTS	9
6.0	REFERENCES	28

List of Figures

Figure		*Page*
2-1	Schematic with LIFAC System Installed	5

List of Tables

Table		*Page*
1-1	Compliance Monitoring	2
1-2	Supplemental Monitoring	3
3-1	Operations Testing - Test Parameters	6
3-2	Post-LIFAC Testing - Test Parameters	7
5-1	Summary of Particulate Matter Test Data	10
5-2	Summary of Gaseous Emissions	11
5-3	Summary of Coal Data	12
5-4	Summary of Analysis of Economizer Ash	15
5-5	Summary of Analysis of LIFAC Ash	17
5-6	Summary of Analysis of ESP Inlet Hopper Ash	19
5-7	Summary of Analysis of ESP Outlet Hopper Ash	21
5-8	Summary of Analysis of Boiler Bottom Ash	23
5-9	Summary of Analysis of Boiler Bottom Aqueous Effluent	25
5-10	Summary of RP&L's NPDES and Feedwater	26

TABLE OF CONTENTS (Continued)

Appendices

Appendix A	Particulate Matter Test Data
Appendix B	Analytical Results: Aqueous and Solid Waste Samples
Appendix C	Production Information - Operations Tests
Appendix D	Production Information - Post-LIFAC Optimization Tests
Appendix E	RP&L's Monthly NPDES Monitoring Reports
Appendix F	Coal Analysis
Appendix G	Particulate Matter Analytical Data, Field Data Sheets, and Equipment Calibration Data - Operations Tests
Appendix H	Particulate Matter Analytical Data, Field Data Sheets, and Equipment Calibration Data - Post-LIFAC Tests

1.0 INTRODUCTION

In 1988, the Department of Energy (DOE) was provided with federal funding to cost-share the design, construction, and operation of the Clean Coal Technology (CCT) projects. The intention of these projects is to demonstrate the feasibility and effectiveness of technologies capable of retrofitting or repowering existing coal-burning power plants so as to reduce air emissions of sulfur dioxide (SO_2) and oxides of nitrogen (NO_x). Under Round III of the CCT program, the Limestone Injection into the Furnace with Activation of Unreacted Calcium (LIFAC) project of LIFAC-North America (LIFAC NA) was chosen from among 48 other proposals to demonstrate its innovative technology to reduce SO_2 emissions. LIFAC NA was a joint venture between ICF Kaiser Engineers, Inc. (ICF Kaiser), located in Pittsburgh Pennsylvania, and Tampella Power based in Marietta, Georgia. The Richmond Power and Light (RP&L) Whitewater Valley Generating Station Unit #2 was the host for the LIFAC demonstration project.

LIFAC NA, on behalf of RP&L, sought and received from Indiana Department of Environmental Management (IDEM) a variance to operate Unit #2 for the testing performed during the different project stages. The variance required specific compliance tests to be conducted at milestones identified in the variance request. In addition to the compliance testing, the project also required supplemental monitoring to be performed. As defined by the Environmental Monitoring Plan (EMP) for the LIFAC project, the supplemental monitoring was performed to identify and characterize potential environmental and health impacts of the project, both on-site and off-site. This monitoring included, yet not limited to, measurement of processes, feedstocks, operating conditions, discharges, and ambient environmental conditions. This supplemental monitoring focused on the measurement of coal feedstocks, boiler and generator operating conditions, gaseous and particulate discharges, and solid and aqueous process by-products. Measurement of coal feedstocks included coal analysis and feed rate to boiler. Boiler and generator operating conditions were recorded on operator log sheets. Measured discharges included total particulate matter, nitrogen oxides (NO_x), sulfur dioxide (SO_2), carbon monoxide (CO), carbon dioxide (CO_2), and oxygen (O_2). Determinations of alkalinity, pH, sulfate content, and any quantities of specified metals, organic compounds, and volatile organic compounds (VOC) present in the process liquid and solid by-products were made. Tables 1-1 and 1-2 provide a summary of the required compliance and supplemental monitoring required under the EMP.

Compliance and supplemental monitoring in accordance with the EMP, was conducted on May 17, 1994 during LIFAC's operation (long-term) tests. As per the Test Plan, operations (long-term) testing will be performed after the optimization tests and the second set of parametric tests to determine the reliability and capability of the LIFAC process over long, continuous operation periods. This set of tests was performed continuously over 500 and 800 hours. Although three different coals were to be tested during this period to evaluate LIFAC's suitability for high sulfur Indiana coals, environmental monitoring was only conducted for coal #1.

The second round of environmental monitoring, including compliance and supplemental monitoring, was conducted on August 16, 1994, during post-LIFAC testing in accordance with the Test Plan. As defined in the Test Plan post-LIFAC testing will be similar to baseline testing. Data will be gathered without the LIFAC system operating which, when compared with the baseline data, will yield evidence of the impacts LIFAC may have had on the host site's boiler and associated subsystem.

TABLE 1-1

COMPLIANCE MONITORING
EMP

Parameter	Sample	Sample Frequency and Duration	Limit[1]	Sample Location (see Figure 2-1)
GASEOUS EMISSIONS				
SO_2[2]	Calculation	Daily	6.0 lb/MBtu	9 - Breeching-duct downstream of the I.D. fan*
Total Suspended Particulates (TSP)	EPA Method 5[3]	2/year	0.22 lb/MBtu	9 - Breeching-duct downstream of the I.D. fan*
Opacity	CEM[4]	Continuous	40%/30%[5]	9 - Breeching-duct downstream of the I.D. fan*
AQUEOUS EFFLUENT (RP&L's NPDES Discharge Permit Requirements)				
Flow	Instantaneous	3 × Weekly	Report	6 - Weir at ponds system outfall
Total Suspended Solids (TSS)	Grab	2 × Weekly	70 mg/l	6 - Weir at ponds system outfall
Oil and Grease	Grab	2 × Weekly	15 mg/l	6 - Weir at ponds system outfall
Total Residual Oxidants (Chlorine)	Grab	2 × Weekly	0.02 mg/l	6 - Weir at ponds system outfall
Temperature	Instantaneous	2 × Weekly	Report	6 - Weir at ponds system outfall
Ammonia (NH_3)	Grab	2 × Monthly	1.8 mg/l (summer) 2.6 (winter)	6 - Weir at ponds system outfall
Copper	Grab	2 × Monthly	0.05 mg/l	6 - Weir at ponds system outfall
Lead	Grab	2 × Monthly	0.02 mg/l	6 - Weir at ponds system outfall
Zinc	Grab	2 × Monthly	0.46 mg/l	6 - Weir at ponds system outfall
Aluminum	Grab	2 × Monthly	0.40 mg/l	6 - Weir at ponds system outfall
Iron	Grab	2 × Monthly	Report	6 - Weir at ponds system outfall
Total Polychlorinated Biphenols (PCBs)	Grab	2 × Monthly	Report	6 - Weir at ponds system outfall

[1] Limits for air emissions are based on the LIFAC Variance to the draft boiler Operating Permits. Limits for water discharges are daily limits.
[2] Complete coal analysis is performed as part of the Test Program.
[3] 40 CFR Part 60.
[4] Continuous Emissions Monitor.
[5] Opacity Limit revised to 30% as per RP&L's variance from IDEM.

* Emissions tests can be conducted at the 250' level on the stack when Unit #1 is not in operation.

TABLE 1-2

SUPPLEMENTAL MONITORING
EMP

Parameter	Sample	Sample Frequency and Duration	Range	Sample Location (see Figure 2-1)
GASEOUS EMISSIONS				
NO_x	EPA Method 7 D&E[1]	Continuous or 3/condition	0-1 lb/MBtu	9 - Breeching-duct* downstream of the I.D. fan
SO_2[2]	EPA Method, 6, 6C or 8	Continuous or 3/condition	0-6 lb/MBtu	9 - Breeching-duct* downstream of the I.D. fan
TSP	EPA Methods 1-5	Continuous or 3/condition	0-1 lb/MBtu	9 - Breeching-duct* downstream of the I.D. fan
PM_{10}	EPA Method 201A	Continuous or 3/condition	0-1 lb/MBtu	9 - Breeching-duct* downstream of the I.D. fan
CO_2	EPA Method 3	Continuous of 3/condition	0-500 lb/MBtu	9 - Breeching-duct* downstream of the I.D. fan
CO	EPA Method 10	Continuous or 3/condition	0-500 ppmv	9 - Breeching-duct* downstream of the I.D. fan
AQUEOUS EFFLUENT				
Alkalinity	EPA Method 310.2	1/Condition	mg $CaCO_3$	6 - Weir at ponds system outfall
SOLID WASTE AND BY-PRODUCT				
TCLP	EPA Method 1311 TCLP Metals, Methods 8240 and 8270 for Organics	1/Condition	Various per parameter	3 - Economizer Hopper 4 - LIFAC Ash 5 - ESP Hoppers 10 - Bottom Ash
Sulfates	ASTM Extraction[3] EPA Method 9035	1/Condition	0-1,000 mg/l	3 - Economizer Hopper 4 - LIFAC Ash 5 - ESP Hoppers 10 - Bottom Ash
Alkalinity	ASTM Extraction Method EPA Method 310.2	1/Condition	mg $CaCO_3$	3 - Economizer Hopper 4 - LIFAC Ash 5 - ESP Hoppers 10 - Bottom Ash
Organics	EPA Method 8240	1/Condition	0-1,000 mg/l	3 - Economizer Hopper 4 - LIFAC Ash 5 - ESP Hoppers 10 - Bottom Ash
pH	EPA Method 9045	1/Condition	0-14 H^+	3 - Economizer Hopper 4 - LIFAC Ash 5 - ESP Hoppers 10 - Bottom Ash

[1] 40 CFR Part 60 Appendix A.
[2] SO_2 monitoring will be performed as part of process monitoring.
[3] Annual book of ASTM standards.

* Emissions tests can be conducted at the 250' level on the stack when Unit #1 is not in operation.

2.0 TECHNOLOGY DESCRIPTION

The LIFAC project involved the installation and testing of the LIFAC system on Unit #2, a 60 MW tangentially-fired, coal-burning boiler. A schematic of the system is included as Figure 2-1. LIFAC is a retrofit flue gas desulfurization technology capable of reducing SO_2 emissions in the range of 75 to 85 percent. The system utilized limestone injection and a unique activation reactor with a humidification process for effective SO_2 removal. The pulverized limestone was pneumatically injected into the upper regions of the furnace. Here, the calcium carbonate ($CaCO_3$) in the limestone was broken down to form calcium oxide (CaO) and carbon dioxide (CO_2). A portion of the sulfur dioxide (SO_2) and sulfur trioxide (SO_3) present in the flue gas chemically reacted with the limestone constituents to form calcium compounds calcium sulphite ($CaSO_3$) and calcium sulphate ($CaSO_4$). Subsequently, the flue gas, carrying along with it the calcium compounds and unreacted CaO, then continued to a unique piece of equipment known as the activation reactor, a cylindrically-shaped vertical tower located between the Unit #2 air preheater and the ESP. Further removal of the SO_2 was achieved by the humidification of the flue gas as it entered and passed through the activation reactor. The addition of the water mists in the reactor caused the remaining untreated CaO to form calcium hydroxide (CaOH). The calcium hydroxide then reacted with additional sulfur dioxide, nearly completing the removal process. The purpose of initiating reductions of SO_2 emissions is to minimize generation of acid rain, as SO_2 is a precursor to its occurrence.

In addition to the boiler bottom ash and fly ash normally produced by coal combustion, there are other "new" by-products associated with the LIFAC system. The addition of limestone to the process and the subsequent reactions create a dry, powdery material referred to as LIFAC solid waste and by-product. Approximately 50 to 60 percent of the solid waste and by-product is collected by the ESP (and the ESP hoppers). The remainder of the waste exits as a powdery ash through hoppers at the bottom of the activation reactor. A small fraction of LIFAC solid waste and by-product may collect in the economizer ash hopper. Wastes captured by the EPS hopper and economizer hopper is collected using a dry mechanical exhauster system and transported to an off-site, permitted landfill. The carbon dioxide leaves with the flue gas in the stack emissions.

There was no change to the amount of coal fired at the plant. Different varieties of coal were tested ranging from a high sulfur to a low sulfur bituminous coal.

FIGURE 4-1
WHITEWATER VALLEY UNIT 2
SCHEMATIC WITH LIFAC SYSTEM INSTALLED

LOCATION	MEDIA	MONITORING PURPOSE: TEST PROGRAM	EMP: SUPPLEMENTAL	EMP: COMPLIANCE
1	SOLID	X		
2	SOLID	X		
3	SOLID	X	X	
4	SOLID	X	X	
5	SOLID	X	X	
6	AQUEOUS			X
7	GASEOUS	X		
8	GASEOUS	X	X	
9	GASEOUS			X
10	SOLID	X	X	

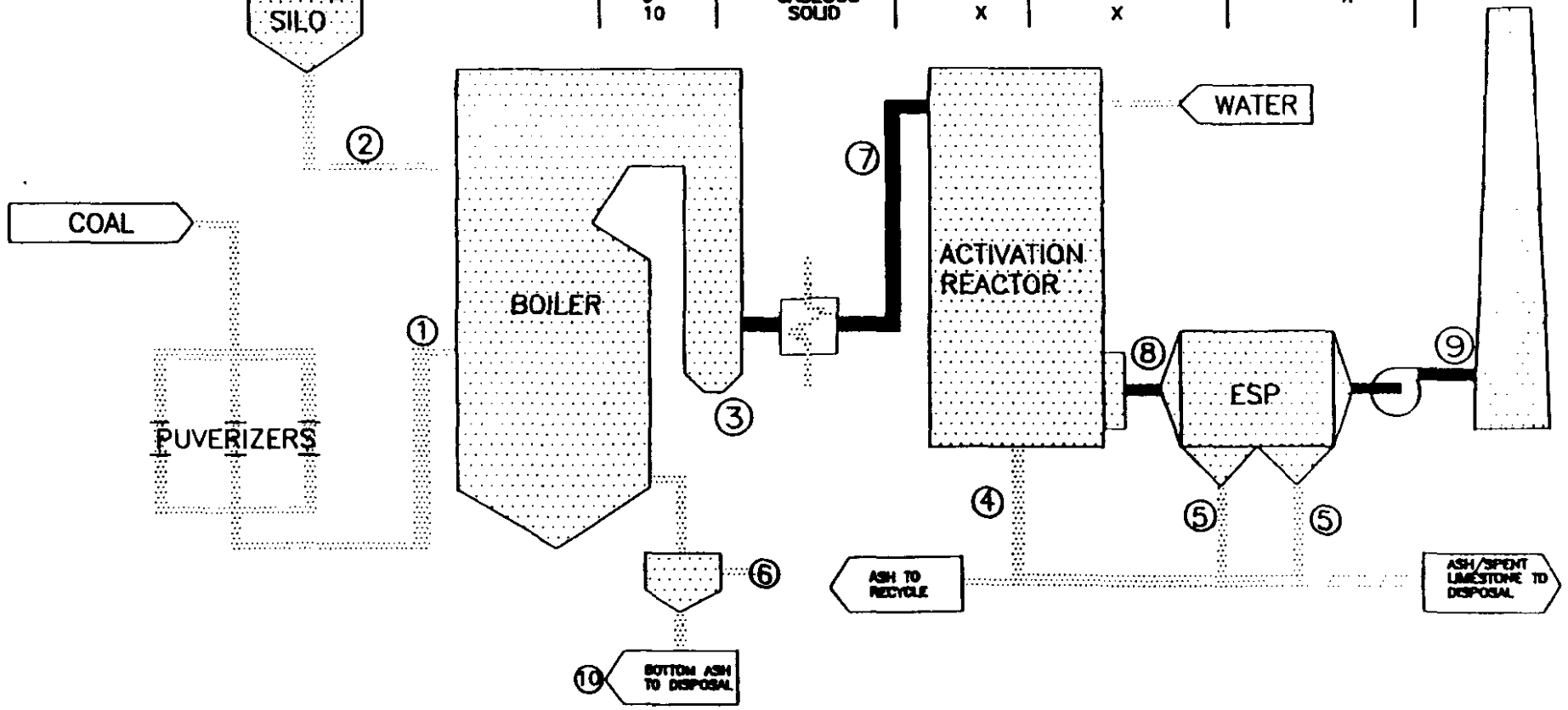

3.0 LIFAC TEST PARAMETERS

Operations (Long-Term) Testing

Environmental monitoring was conducted during operations (long-term) tests on May 17, 1994. Monitoring included compliance and supplemental emissions testing. With both units in operation, sampling was performed at the test portals located in the duct breeching, the point just prior to where exhaust from Unit #2 joins with Unit #1 exhaust, downstream of the I.D. fan. Sootblowing was performed during one of the three PM tests conducted that day.

Under supplemental monitoring ash samples were collected at the economizer hoppers, LIFAC bottom hoppers, ESP inlet and outlet hoppers, and boiler bottom ash disposal bin. Monitoring of the plant's feedwater was also conducted since its incoming quality is believed to be impacting compliance with effluent criteria in accordance with RP&L's NPDES Permit. Feedwater for the plant is either pumped from the river, or during dry seasons, is pumped from the local sanitary treatment plant's effluent discharge. Feedwater during the May test was coming from the river.

The boiler bottom ash discharge water was also sampled since it is believed that immediate impacts will not be seen at the pond outfall as a result of LIFAC operations due to the long residence time through the pond system. The team plans to utilize RP&L's pond discharge monitoring analyses as required under their NPDES permit to identify any long-term trends after LIFAC has been running.

LIFAC test parameters during the May 17, 1994 environmental monitoring are summarized in Table 3-1:

TABLE 3-1

OPERATIONS TESTING
TEST PARAMETERS

	May 17, 1994
Boiler Load (MW)	58
Coal Quality - % S - SO_2 lb/MMBtu	2.25 3.98
Limestone Quality	80% - 325 Fine
Ca/S Molar Ratio	2.0
Reactor Outlet Temperature (°F) (approach to saturation)	10
% Bypass (1)	0
Recycling (2)	Yes

(1) % Bypass is the amount of flue gas that is bypassed around the reactor.

(2) Recycle is when spent sorbent from the inlet ESP hoppers is recycled through LIFAC to improve sorbent utilization and increase SO_2 reduction.

Post-LIFAC Testing

On August 16, 1994, environmental monitoring was conducted during post-LIFAC testing. Compliance and supplemental tests were conducted each day including emissions testing. Since Units

#1 and #2 were both in operation, emissions monitoring was conducted at the test portals located in the duct breeching located downstream of the I.D. fan. Sootblowing was performed during one of the three PM tests for that day.

Ash samples were collected at the economizer hoppers, ESP inlet and outlet hoppers and the boiler bottom ash disposal bin. The sampling team also continued to monitor the feedwater to the plant which, at this time, was coming from the treatment plant's effluent discharge, as well as the boiler bottom ash discharge water.

LIFAC test parameters during the August 16, 1994 environmental monitoring are summarized in Table 3-2:

TABLE 3-2

POST-LIFAC TESTING
TEST PARAMETERS

	August 16, 1994
Boiler Load (MW)	64.0
Coal Quality - % S - SO_2 lb/MMBtu	2.20 4.05
Limestone Quality	–
Ca/S Molar Ratio	–
Reactor Outlet Temperature (°F) (approach to saturation)	–
% Bypass	–
Recycling	–

4.0 METHODOLOGIES

The majority of the compliance and supplemental monitoring centered around the testing of particulate matter and gaseous parameters. The test programs utilized methodologies promulgated in 40 CFR 60, Appendix A, for the particulate matter and duct gas determinations necessary for the test program. EPA Methods 1, 2, 3A, and 4 were used for the determination of the sampling point locations, gas velocities and volumetric flow rates, gas molecular weight on a dry basis, and percent moisture content, respectively. Particulate matter was determined using EPA Method 5. Gas concentrations of NO_x, SO_2, and CO were determined utilizing EPA Methods 7E, 6C, and 10, respectively. PM_{10} was determined using EPA Method 201A. Also, verification tests for absence of cyclonic flow was performed each of the May and August test days at the breech sampling location, in accordance with EPA Method 1, Section 2.5.

Analyses of the solid and aqueous LIFAC by-products followed EPA methods and ASTM extraction methods. The specific EPA methods which were referenced are sited in the footnotes on the actual analytical results provided by Antech Ltd. attached in Appendix B. Total alkalinity of both the aqueous and solid samples were determined by EPA Method 310.2. Before the alkalinity of the solid samples could be measured, they were extracted using ASTM extraction methods. The remaining analyses of the solid wastes were performed using the following EPA Methods: pH, 9045; sulfate, 9038 (using ASTM extraction method); metals, Toxicity Characteristics Leaching Procedures (TCLP) 1311, 6010, 7470, and 7740; organic materials, TCLP 8260 and 8270; and VOC, TCLP 8260.

5.0 RESULTS

A summary of results for compliance and supplemental monitoring for particulate matter testing for LIFAC's baseline, parametric and optimization, and operations and post-LIFAC testing are presented in Tables 5-1 and 5-2. Table 5-1, Summary of Particulate Matter Test Data, includes pertinent process conditions such as power generation in units of megawatts (MW), coal feed rates (lb/hr) and firing rates (MBtu/hr). It also includes correction to the particulate matter loading to account for sootblowing which IDEM required to be done during one of the three PM tests conducted on May 17, 1994 and August 1994. Table 5-2 provides a summary of gaseous emissions as required under supplemental monitoring. This table indicates a reduction in SO_2 for parametric and optimization tests, however SO_2 was not measured during the operations testing. Detailed particulate matter test data and actual gaseous emission results are provided in Appendix A. For backup calculations, refer to the Baseline Monitoring Report[1] (for baseline information), Parametric and Optimization Report[2], and see Appendix A for tests conducted in May and August 1993. Coal data for the different testing events is summarized in Table 5-3, with actual analysis provided in Appendix F.

The particulate matter mass loadings summarized in Table 5-1 are expressed in grains per dry standard cubic feet (gr/dscf), pounds per hour (lb/hr), and mass per heat input, expressed as pounds per million Btu (lb/MBtu). Mass emission per heat input was calculated using two different methods. The first method was based on actual process parameters such as coal feed rate to the boiler and coal heating value. The second method utilized EPA Method 19, also known as the F factor method. The following equation, extracted from the method, calculates a theoretical mass emission per heat input based on the F_d, which is the ratio of the gas volume of the products of combustion to the heat contents of the fuel (dependent on the type of coal), measured pollutant concentration, and the measured percent oxygen, with all variables being on a dry basis.

$$E = F_d * C_d * [20.9/(20.9 - \%O_{2d})]$$

where
- E = Emission rate (lb/MBtu)
- F_d = Oxygen-based F factor (dscf/MBtu), dry basis (9780 dscf/MBtu for bituminous coal)
- C_d = Pollutant concentration (lb/dscf)
- $\%O_{2d}$ = Percent oxygen (%), dry basis

Detailed calculations using the F factor method can be found in the Baseline Monitoring Report[1] (for baseline information), Parametric and Optimization Report[2], and Appendix A for the operations and post-LIFAC testing. Stack gas conditions have been presented in the tables. Flow rates have been expressed in two different formats: actual cubic feet per minute (acfm) and dry standard cubic feet per minute (dscfm). Other stack gas parameters such as temperature and percent moisture have also been included. Percent isokinetics have been calculated for each test run. The percent isokinetic value represents a ratio of the gas velocity through the sampling probe nozzle to the gas velocity in the stack. An isokinetic value is acceptable if it falls within the range of 90 to 110 percent. All isokinetic values are within the acceptable limits. After review of the calibration data, all particulate matter sampling equipment was operated in accordance with EPA Methods 2 through 5. Particulate matter emission calculations, analytical data, field data sheets, and equipment

TABLE 5-1
SUMMARY OF
ENVIRONMENTAL MONITORING
PARTICULATE MATTER TEST DATA

	UNITS	Baseline		Parametric		Optimization		Operations	Post-LIFAC
		9-2-92	12-18-92	9-23-93	9-24-93	12-7-93	12-8-93	(5-17-94)	(6-18-94)
Process Conditions		Duct Breeching		Stack 250' Level		Duct Breeching		Duct Breeching	Duct Breeching
Power Generation	MW	65.1	65.8	62.3	60.6	63.3	58.5	58	64
Coal Feed Rate	lb/hr	61220	59677	58860	54360	56800	53400	52817	57050
Heat Input	MBtu/hr	691.1	672.3	665.0	614.2	644.9	609.6	606.7	656.2
Particulate Matter Loadings									
Concentration	gr/dscf	0.0135	0.0912	0.0425	0.0672	0.1335	0.1109	0.0511	0.0627
Mass Flow Rate	lb/hr	17.28	120.30	55.36	84.83	193.10	155.60	72.55	96.07
Mass Emission/Heat Input (1)	lb/MBtu	0.025	0.180	0.085	0.131	0.295	0.250	0.121	0.146
Mass Emission/Heat Input (2)	lb/MBtu	0.024	0.174	0.074	0.140	0.257	0.209	0.103	0.116
Mass Emission/Heat Input (2*)	lb/MBtu	–	–	0.072	0.128	0.253	0.206	0.103	0.116
Duct Conditions									
Average Flow Rate	acfm	247167	265939	236622	229237	264200	257800	245528	304100
Dry Standard Flow Rate	dscfm	149267	155968	152089	147086	168900	163600	165867	179367
Temperature	deg F	338	342	225	225	250	254	235	337
Percent Moisture	%	9.9	8.6	13.2	14.0	12.5	12.5	9.47	9.3
Percent O2	%	4.4	5.7	4.1	6.8	5.7	5.4	6.43	5.1
Percent CO2	%	14.8	14.2	14.0	13.0	13.3	13.8	13.33	13.8
Isokinetics	%	102.8	108.1	105.7	104.7	102.7	101.7	99	101
Opacity	%	–	–	12.6	12.1	19.7	15.7	12.3	8.0

(1) Based on measured coal feed rates and heating values.
(2) Based on EPA Method 19 (F factor method).
(2*) Corrected for sootblowing.

TABLE 5-2
SUMMARY OF
ENVIRONMENTAL MONITORING
GASEOUS EMISSIONS

PARAMETERS	LIMITS	BASELINE (9-2-92) DUCT BREECHING	BASELINE (12-18-92) DUCT BREECHING	PARAMETRIC (9-23-93) STACK 250' LEVEL	PARAMETRIC (9-24-93) STACK 250' LEVEL	OPTIMIZATION (12-7-93) DUCT BREECHING	OPTIMIZATION (12-8-93) DUCT BREECHING	OPERATION (5-17-94) DUCT BREECHING	POST-LIFAC (8-16-94) DUCT BREECHING
TSP (lb/M btu)	0.22-0.40*	0.024	0.174	0.074	0.140	0.253	0.206	0.103	0.116
OPACITY	30%	–	–	8-25%	10-18%	19-21%	14-18%	11-14%	7.8-8.2%
SO2 lb / Mbtu (ppmv)	6.0	(1972)	–	(1411.8)	(891.9)	(844.3)	(925.8)	---	3.9
NOx lb / Mbtu (ppmv)	0-1 (0-588)	(375.6)	–	(379.0)	(352.7)	(337.2)	(350.3)	---	0.6
PM-10 lb/M btu (%)	0-1 (100%)	–	–	(77.1 >) (22.9 <)	(51.1 >) (48.9 <)	(55.27 >) (44.73 <)	(50.66 >) (49.34 <)	---	0.02
CO2 lb/M btu (%)	0-500 (0-50)	(14.8)	–	(14.36)	(13.95)	(13.35)	(13.83)	---	(13.8)
CO (ppmv)	0-500	19.9	–	66.57	216.23	4.1	6.5	---	6.0

* Per IDEM Variance

TABLE 5-3
SUMMARY OF
ENVIRONMENTAL MONITORING
COAL DATA

PARAMETERS	Baseline 9-2-92	Baseline 9-22-93	Parametric 9-23-93	Parametric 9-24-93	Optimization 12-7-93	Optimization 12-8-93	Operations (5-17-94)	Post-LIFAC (8-16-94)
Btu/lb. (Rec'd)	11355	11307	11250	11253	11390	11417	11487	11513
Btu/lb. (Dry)	13084	12893	12967	12983	13016	13094	13274	13247
Moisture % (Rec'd)	13.22	12.30	13.24	13.33	12.49	12.81	13.46	13.09
Ash (Rec'd)	9.00	10.53	9.98	9.86	9.79	9.53	8.27	8.62
Ash (Dry)	10.37	12.00	11.50	11.37	11.19	10.93	9.56	9.91
Sulfur % (Rec'd)	2.46	2.25	2.20	2.18	2.24	2.14	2.12	2.34
Sulfur % (Dry)	2.83	2.57	2.54	2.51	2.56	2.45	2.45	2.69

Based on analysis conducted by Standard Laboratories, original laboratory results attached in Appendix F.

calibrations can be found in the Baseline Monitoring Report[1] (for baseline information), Parametric and Optimization Report[2], and Appendices A, G, and H for the May and August testing.

Also verification tests for absence of cyclonic flow was performed each test day during the May and August tests at the breeching sampling location, in accordance with EPA Method 1, Section 2.5. The location is acceptable if the average angle of rotation, as measured by the pilot tube, is less than 20 degrees. The average angle of rotation for the May and August test days was less than 20 degrees, thus the sampling location was deemed acceptable.

Table 5-1 also summarizes the opacity measurements taken during the three PM test runs for each day. The opacity readings were read directly from RP&L's opacity recorder. The opacities are averaged over six minute periods and are represented by the stepped blocks on the recorder chart. Copies of the opacity charts can be found in Appendix C for the operations tests and Appendix D for the post-LIFAC test, while averages for each individual test can be found in the Baseline Monitoring Report[1], Parametric and Optimization Report[2], and Appendix A for the operations and post-LIFAC testing. The high spikes on the chart are due to the periodic cleaning (rapping cycles) of the ESP collector plates. The action of rapping the collector plates produces a sudden spike on the opacity recorder which represents that instantaneous reading at that time. These rapping spikes are subsequently incorporated into the six minute averages. As shown on Table 5-2, the averaged opacity readings for all tests are below the variance limit of 40%.

PM_{10} was determined employing EPA Method 201A. PM_{10} results for the August 16 testing are provided in Table 5-2. (PM_{10} testing was not conducted during the May test.) Also there are no baseline PM_{10} results due to sampling equipment access difficulties with the test ports, which were too small for the PM_{10} test probe heads. This problem was corrected for subsequent testing.

Analyses of the aqueous effluent and solid waste were conducted by Antech Ltd. in accordance with the EMP. The aqueous effluent sample was collected from the Boiler Bottom Ash Bin (sample location 6A) and from the plants incoming feed water. Based on the review of RP&L's monthly monitoring data, the plant has had several exceedance of their 0.40 mg/l aluminum limit. They believed that the feedwater from the treatment plant (source during the August tests) could possibly be coming into the plant at an elevated level of aluminum, therefore impacting their discharge. However, based on our August analysis this does not appear to be the case.

A summary of the aqueous samples are presented in Tables 5-9 and 5-10, with Antech's actual analytical results located in Appendix B.

Solid samples were collected from the following during the May 17 and August 16 testing:

Sample Location	Sample Location Description
3	Economizer Ash Hopper
4	Reactor Bottom Ash
5A	ESP Inlet Hopper
5B	ESP Outlet Hopper
6B	Boiler Bottom Ash Bin

A summary of the analytical results for the solid samples are presented in Tables 5-4 through 5-8. A table was developed for each type of ash sampled to make the comparison of baseline results to

the parametric and optimization results and to the operations and post-LIFAC easier. Antech's actual analytical results are located in Appendix B, along with a list of Regulatory Levels for TCLPs.

During operations testing all metals in all five samples locations were below detectable limits. All metals under the post-LIFAC testing were below detectable limits except for the following:

Sample Location	Parameter/Level	Regulatory Limit
Front ESP Hopper	Cadmium 0.13 mg/l	1.0 mg/l
Back ESP Hopper	Arsenic 0.29 mg/l	5.0 mg/l
	Cadmium 0.21 mg/l	1.0 mg/l
	Chromium 0.27 mg/l	5.0 mg/l

All of the above are below regulatory levels. In regard to TCLP organic and VOC analyses during operations testing all parameters for all five separate sample locations were below detectable limits with the exception of 5.0 μg/kg of toluene found in the back ESP hopper . There is no regulatory levels established for toluene. Also, during post-LIFAC testing all TCLP and VOC parameters were below detectable levels except again for 30 μg/kg of methylene chloride in the back ESP hopper and 12 μg/kg of methylene chloride in the boiler bottom ash. The source of methylene chloride is not known at this time. Results of the method blank runs for the TCLP analyses are also in Appendix B with the actual analytical results.

TABLE 5-4
SUMMARY OF
ENVIRONMENTAL MONITORING
SOLID WASTE AND BY PRODUCT
ECONOMIZER ASH

SAMPLE LOCATION : ECONOMIZER HOPPER (3)

PARAMETERS	REGULATORY LIMIT (mg/l)* (if established)	UNITS	BASELINE (9-2-92)	BASELINE (9-22-93)	PARAMETRIC (9-23-93)	PARAMETRIC (9-24-93)	OPTIMIZATION (12-7-93)	OPTIMIZATION (12-8-93)	OPERATIONS (5-17-94)	POST-LIFAC (8-16-94)
Alkalinity	–	mg/l CaCO3	87.0	417	2540	2760	2090	2130	2430	858
pH	–	pH units	11.90	12.48	12.55	12.44	12.55	12.52	12.70	12.78
Sulfate	–	mg/l	100	170	1200	1200	1600	1700	1700	310
Percent Carbon	–	%	–	5.6	4.5	4.4	6.5	5.3	4.4	4.7
Total Metals:										
Arsenic (Total)	–	mg/kg	–	–	–	26	47	35	23	34
TCLP (5) Metals :										
Silver	5.0	mg/l	<0.10	<0.10	<0.10	<0.10	<0.10	<0.10	<0.10	<0.10
Arsenic	5.0	mg/l	<0.10	<0.10	<0.10	<0.10	<0.10	<0.10	<0.10	<0.10
Barium	100.0	mg/l	<10	<10	<10	<10	<10	<10	<10	<10
Cadmium	1.0	mg/l	<0.10	<0.10	<0.10	<0.10	<0.10	<0.10	<0.10	<0.10
Chromium	5.0	mg/l	<0.10	<0.10	<0.10	<0.10	<0.10	<0.10	<0.10	<0.10
Mercury	0.2	mg/l	<0.010	<0.010	<0.010	<0.010	<0.010	<0.010	<0.010	<0.010
Lead	5.0	mg/l	<0.10	<0.10	<0.10	<0.10	<0.10	<0.10	<0.10	<0.10
Selenium	1.0	mg/l	<0.10	<0.10	<0.10	<0.10	<0.10	<0.10	<0.10	<0.10
TCLP Extraction Fluid Data:										
Extraction Fluid	–		No.1	No.1	No.2	No.2	No.2	No.2	No.2	No.1
pH w/ Deionized Water	–	pH Units	11.05	10.70	11.75	11.75	12.69	12.71	12.06	11.04
pH after Addition of 1 Normal HCL	–	pH Units	1.55	3.21	11.17	11.40	11.95	11.78	11.84	2.54
pH of TCLP Extract	–	pH Units	5.15	5.33	12.31	12.37	12.30	12.59	12.16	6.03
Amount of Sample Extracted	–	g	100	100	100	100	100	100	100	80
TCLP Volatile Organic Analysis : (8260)										
Benzene	0.5	ug/l	<50	<50	<50	<50	<50	<50	<50	<50
2-Butanone	200.0	ug/l	<5000	<5000	<5000	<5000	<5000	<5000	<5000	<5000
Carbon Tetrachloride	0.5	ug/l	<50	<50	<50	<50	<50	<50	<50	<50
Chlorobenzene	100.0	ug/l	<1000	<1000	<1000	<1000	<1000	<1000	<1000	<1000
Chloroform	6.0	ug/l	<500	<500	<500	<500	<500	<500	<500	<500
1,2-Dichloroethane	0.5	ug/l	<50	<50	<50	<50	<50	<50	<50	<50
1,1-Dichloroethene	0.7	ug/l	<50	<50	<50	<50	<50	<50	<50	<50
Tetrachloroethene	0.7	ug/l	<50	<50	<50	<50	<50	<50	<50	<50
Trichloroethene	0.5	ug/l	<50	<50	<50	<50	<50	<50	<50	<50
Vinyl Chloride	0.2	ug/l	<50	<50	<50	<50	<50	<50	<50	<25
TCLP Base/Neutral Extractables : (8270)										
1,4-Dichlorobenzene	7.5	ug/l	<500	<500	<500	<500	<500	<500	<500	<500
2,4-Dinitrotoluene	0.13	ug/l	<50	<50	<50	<50	<50	<50	<50	<50
Hexachlorobutadiene	0.5	ug/l	<50	<50	<50	<50	<50	<50	<50	<50
Hexachlorobenzene	0.13	ug/l	<100	<100	<100	<100	<100	<100	<100	<100
Hexachloroethane	3.0	ug/l	<500	<500	<500	<500	<500	<500	<500	<500
Nitrobenzene	2.0	ug/l	<100	<100	<100	<100	<100	<100	<100	<100
Pyridine	5.0	ug/l	<500	<500	<500	<500	<500	<500	<500	<500

TABLE 5-4 (continued)
SUMMARY OF
ENVIRONMENTAL MONITORING
SOLID WASTE AND BY PRODUCT
ECONOMIZER ASH

SAMPLE LOCATION : ECONOMIZER HOPPER (3)

PARAMETERS	REGULATORY LIMIT (mg/l)* (if established)	UNITS	BASELINE (9-2-92)	BASELINE (9-22-93)	PARAMETRIC (9-23-93)	PARAMETRIC (9-24-93)	OPTIMIZATION (12-7-93)	OPTIMIZATION (12-8-93)	OPERATIONS (5-17-94)	POST-LIFAC (8-16-94)
0										
Total Cresol	200.0	ug/l	<5000	<5000	<5000	<5000	<5000	<5000	<5000	<5000
Pentachlorophenol	100.0	ug/l	<5000	<5000	<5000	<5000	<5000	<5000	<5000	<5000
2,4,5-Trichlorophenol	400.0	ug/l	<5000	<5000	<5000	<5000	<5000	<5000	<5000	<5000
2,4,6-Trichlorophenol	2.0	ug/l	<100	<100	<100	<100	<100	<100	<100	<100
Acetone	–	ug/kg	<500	<13000	<13000	<13000	<13000	<13000	<500	<500
Benzene	0.5	ug/kg	<25	<630	<630	<630	<630	<630	<25	<25
Bromodichloromethane	–	ug/kg	<25	<630	<630	<630	<630	<630	<25	<25
Bromoform	–	ug/kg	<25	<630	<630	<630	<630	<630	<25	<25
Bromomethane	–	ug/kg	<50	<1300	<1300	<1300	<1300	<1300	<50	<50
2-Butanone	200.0	ug/kg	<500	<13000	<13000	<13000	<13000	<13000	<50	<50
Carbon Disulfide	–	ug/kg	<25	<630	<630	<630	<630	<630	<25	<25
Carbon Tetrachloride	0.5	ug/kg	<25	<630	<630	<630	<630	<630	<25	<25
Chlorobenzene	100.0	ug/kg	<25	<630	<630	<630	<630	<630	<25	<25
Chlorodibromomethane	–	ug/kg	<25	<630	<630	<630	<630	<630	<25	<25
Chloroethane	–	ug/kg	<50	<1300	<1300	<1300	<1300	<1300	<50	<50
Chloromethane	–	ug/kg	<50	<1300	<1300	<1300	<1300	<1300	<50	<50
Chloroform	6.0	ug/kg	<25	<630	<630	<630	<630	<630	<25	<25
1,1-Dichloroethane	–	ug/kg	<25	<630	<630	<630	<630	<630	<25	<25
1,2-Dichloroethane	0.5	ug/kg	<25	<630	<630	<630	<630	<630	<25	<25
1,1-Dichloroethene	0.7	ug/kg	<25	<630	<630	<630	<630	<630	<25	<25
cis-1,2-Dichloroethene	–	ug/kg	<25	<630	<630	<630	<630	<630	<25	<25
trans-1,2-Dichloroethene	–	ug/kg	<25	<630	<630	<630	<630	<630	<25	<25
1,2-Dichloropropane	–	ug/kg	<25	<630	<630	<630	<630	<630	<25	<25
cis-1,3-Dichloropropene	–	ug/kg	<25	<630	<630	<630	<630	<630	<25	<25
trans-1,3-Dichloropropene	–	ug/kg	<25	<630	<630	<630	<630	<630	<25	<25
Ethylbenzene	–	ug/kg	<25	<630	<630	<630	<630	<630	<25	<25
2-Hexanone	–	ug/kg	<250	<6300	<6300	<6300	<6300	<6300	<250	<250
Methylene Chloride	–	ug/kg	46	<630	<630	<630	<630	<630	<25	<25
4-Methyl-2-Pentanone (MIBK)	–	ug/kg	<250	<6300	<6300	<6300	<6300	<6300	<250	<250
Styrene	–	ug/kg	<25	<630	<630	<630	<630	<630	<25	<25
1,1,2,2-Tetrachloroethane	–	ug/kg	<25	<630	<630	<630	<630	<630	<25	<25
Tetrachloroethene	0.7	ug/kg	<25	<630	<630	<630	<630	<630	<25	<25
Toluene	–	ug/kg	<25	<630	<630	<630	<630	<630	<25	<25
1,1,1-Trichloroethane	–	ug/kg	<25	<630	<630	<630	<630	<630	<25	<25
1,1,2-Trichloroethane	–	ug/kg	<25	<630	<630	<630	<630	<630	<25	<25
Trichloroethene	0.5	ug/kg	<25	<630	<630	<630	<630	<630	<25	<25
Vinyl Chloride	0.2	ug/kg	<50	<1300	<1300	<1300	<1300	<1300	<50	<50
Xylenes (Total)	–	ug/kg	<25	<630	<630	<630	<630	<630	<25	<25

* Regulatory limit units may differ from measured value units.

TABLE 5-5
SUMMARY OF
ENVIRONMENTAL MONITORING
SOLID WASTE AND BY PRODUCT
LIFAC ASH

SAMPLE LOCATION : REACTOR BOTTOM ASH (4)

PARAMETERS	REGULATORY LIMIT (mg/l)* (if established)	UNITS	PARAMETRIC (9-23-93)	PARAMETRIC (9-24-93)	OPTIMIZATION (12-7-93)	OPTIMIZATION (12-8-93)	OPERATIONS (5-17-94)	POST-LIFAC (8-16-94)
Alkalinity		mg/l CaCO3	2220	2440	1050	1850	2220	---
pH		pH units	12.33	12.48	12.42	12.41	12.72	---
Sulfate		mg/l	850	950	1500	990	1600	---
Percent Carbon		%	3.9	2.9	3.3	3.5	3.6	---
Total Metals:								
Arsenic (total)	5.0	mg/kg	–	25	32	23	29	---
TCLP Metals :								
Silver	5.0	mg/l	<0.10	<0.10	<0.10	<0.10	<0.10	---
Arsenic	5.0	mg/l	<0.10	<0.10	<0.10	<0.10	<0.10	---
Barium	100.0	mg/l	<10	<10	<10	<10	<10	---
Cadmium	1.0	mg/l	<0.10	<0.10	<0.10	<0.10	<0.10	---
Chromium	5.0	mg/l	<0.10	<0.10	<0.10	<0.10	<0.10	---
Mercury	0.2	mg/l	<0.010	<0.010	<0.010	<0.010	<0.010	---
Lead	5.0	mg/l	<0.10	<0.10	<0.10	<0.10	<0.10	---
Selenium	1.0	mg/l	<0.10	<0.10	<0.10	<0.10	<0.10	---
TCLP Extraction Fluid Data:								
Extraction Fluid			No.2	No.2	No.2	No.2	No.2	---
pH w/ Deionized Water		pH Units	11.65	11.60	12.46	12.52	11.99	---
pH after Addition of 1 Normal HCL		pH Units	11.09	10.65	11.23	11.88	11.77	---
pH of TCLP Extract		pH Units	12.02	12.11	12.02	6.74	11.94	---
Amount of Sample Extracted		g	100	100	100	100	100	---
TCLP Volatile Organic Analysis : (8260)								
Benzene	0.5	ug/l	<50	<50	<50	<50	<50	---
2-Butanone	200.0	ug/l	<5000	<5000	<5000	<5000	<5000	---
Carbon Tetrachloride	0.5	ug/l	<50	<50	<50	<50	<50	---
Chlorobenzene	100.0	ug/l	<1000	<1000	<1000	<1000	<1000	---
Chloroform	6.0	ug/l	<500	<500	<500	<500	<500	---
1,2-Dichloroethane	0.5	ug/l	<50	<50	<50	<50	<50	---
1,1-Dichloroethene	0.7	ug/l	<50	<50	<50	<50	<50	---
Tetrachloroethene	0.7	ug/l	<50	<50	<50	<50	<50	---
Trichloroethene	0.5	ug/l	<50	<50	<50	<50	<50	---
Vinyl Chloride	0.2	ug/l	<50	<50	<50	<50	<50	---
TCLP Base/Neutral Extractables : (8270)								
1,4-Dichlorobenzene	7.5	ug/l	<500	<500	<500	<500	<500	---
2,4-Dinitrotoluene	0.13	ug/l	<50	<50	<50	<50	<50	---
Hexachlorobutadiene	0.5	ug/l	<50	<50	<50	<50	<50	---
Hexachlorobenzene	0.13	ug/l	<100	<100	<100	<100	<100	---
Hexachloroethane	3.0	ug/l	<500	<500	<500	<500	<500	---
Nitrobenzene	2.0	ug/l	<100	<100	<100	<100	<100	---
Pyridine	5.0	ug/l	<500	<500	<500	<500	<500	---

TABLE 5-5 (continued)
SUMMARY OF
ENVIRONMENTAL MONITORING
SOLID WASTE AND BY PRODUCT
LIFAC ASH

SAMPLE LOCATION : REACTOR BOTTOM ASH (4)

PARAMETERS	REGULATORY LIMIT (mg/l)* (if established)	UNITS	PARAMETRIC (9-23-93)	PARAMETRIC (9-24-93)	OPTIMIZATION (12-7-93)	OPTIMIZATION (12-8-93)	OPERATIONS (5-17-94)	POST-LIFAC (8-16-94)
TCLP Acid Extractables : (8270)								
Total Cresol	200.0	ug/l	<5000	<5000	<5000	<5000	<5000	---
Pentachlorophenol	100.0	ug/l	<5000	<5000	<5000	<5000	<5000	---
2,4,5-Trichlorophenol	400.0	ug/l	<5000	<5000	<5000	<5000	<5000	---
2,4,6-Trichlorophenol	2.0	ug/l	<100	<100	<100	<100	<100	---
Acetone		ug/kg	<13000	<13000	<13000	<13000	<500	---
Benzene	0.5	ug/kg	<630	<630	<630	<630	<25	---
Bromodichloromethane		ug/kg	<630	<630	<630	<630	<25	---
Bromoform		ug/kg	<630	<630	<630	<630	<25	---
Bromomethane		ug/kg	<1300	<1300	<1300	<1300	<50	---
2-Butanone	200.0	ug/kg	<13000	<13000	<13000	<13000	<50	---
Carbon Disulfide		ug/kg	<630	<630	<630	<630	<25	---
Carbon Tetrachloride	0.5	ug/kg	<630	<630	<630	<630	<25	---
Chlorobenzene	100.0	ug/kg	<630	<630	<630	<630	<25	---
Chlorodibromomethane		ug/kg	<630	<630	<630	<630	<25	---
Chloroethane		ug/kg	<1300	<1300	<1300	<1300	<50	---
Chloromethane		ug/kg	<1300	<1300	<1300	<1300	<50	---
Chloroform	6.0	ug/kg	<630	<630	<630	<630	<25	---
1,1-Dichloroethane		ug/kg	<630	<630	<630	<630	<25	---
1,2-Dichloroethane	0.5	ug/kg	<630	<630	<630	<630	<25	---
1,1-Dichloroethene	0.7	ug/kg	<630	<630	<630	<630	<25	---
cis-1,2-Dichloroethene		ug/kg	<630	<630	<630	<630	<25	---
trans-1,2-Dichloroethene		ug/kg	<630	<630	<630	<630	<25	---
1,2-Dichloropropane		ug/kg	<630	<630	<630	<630	<25	---
cis-1,3-Dichloropropene		ug/kg	<630	<630	<630	<630	<25	---
trans-1,3-Dichloropropene		ug/kg	<630	<630	<630	<630	<25	---
Ethylbenzene		ug/kg	<630	<630	<630	<630	<25	---
2-Hexanone		ug/kg	<6300	<6300	<6300	<6300	<250	---
Methylene Chloride		ug/kg	<630	<630	<630	<630	<25	---
4-Methyl-2-Pentanone (MIBK)		ug/kg	<6300	<6300	<6300	<6300	<250	---
Styrene		ug/kg	<630	<630	<630	<630	<25	---
1,1,2,2-Tetrachloroethane		ug/kg	<630	<630	<630	<630	<25	---
Tetrachloroethene	0.7	ug/kg	<630	<630	<630	<630	<25	---
Toluene		ug/kg	<630	<630	<630	<630	<25	---
1,1,1-Trichloroethane		ug/kg	<630	<630	<630	<630	<25	---
1,1,2-Trichloroethane		ug/kg	<630	<630	<630	<630	<25	---
Trichloroethene	0.5	ug/kg	<630	<630	<630	<630	<25	---
Vinyl Chloride	0.2	ug/kg	<1300	<1300	<1300	<1300	<50	---
Xylenes (Total)		ug/kg	<630	<630	<630	<630	<25	---

* Regulatory limit units may differ from measured value units.

TABLE 5-6
SUMMARY OF
ENVIRONMENTAL MONITORING
SOLID WASTE AND BY PRODUCT
ESP INLET HOPPER

SAMPLE LOCATION : ESP INLET HOPPERS #7 & #8 (5A)

PARAMETERS	REGULATORY LIMIT (mg/l)* (if established)	UNITS	BASELINE (9-2-92)	BASELINE (9-22-93)	PARAMETRIC (9-23-93)	PARAMETRIC (9-24-93) (5A-1)	PARAMETRIC (9-24-93) (5A-2)	OPTIMIZATION (12-7-93)	OPTIMIZATION (12-8-93)	OPERATIONS (5-17-94)	POST-LIFAC (6-18-94)
Alkalinity	–	mg/l CaCO3	299	2070	2920	3060	2780	2250	2400	2670	370
pH	–	pH units	11.60	12.65	12.51	12.44	12.50	12.42	12.60	12.69	11.83
Sulfate	–	mg/l	260	810.0	1400	1200	1100	1700	1600	1800	320
Percent Carbon	–	%	–	3.6	3.3	2.6	2.3	3.3	3.1	2.9	4.5
Total Metals:											
Arsenic (Total)	5.0	mg/kg	–	340	–	69	36	60	50	41	9.8
TCLP Metals :											
Silver	5.0	mg/l	<0.10	<0.10	<0.10	<0.10	<0.10	<0.10	<0.10	<0.10	<0.10
Arsenic	5.0	mg/l	1.3	0.14	<0.10	<0.10	<0.10	<0.10	<0.10	<0.10	<0.10
Barium	100.0	mg/l	<10	<10	<10	<10	<10	<10	<10	<10	<10
Cadmium	1.0	mg/l	<0.10	<0.10	<0.10	<0.10	<0.10	<0.10	<0.10	<0.10	0.13
Chromium	5.0	mg/l	<0.10	<0.10	<0.10	<0.10	<0.10	<0.10	<0.10	<0.10	<0.10
Mercury	0.2	mg/l	<0.010	<0.010	<0.010	<0.010	<0.010	<0.010	<0.010	<0.010	<0.010
Lead	5.0	mg/l	<0.10	<0.10	<0.10	<0.10	<0.10	<0.10	<0.10	<0.10	<0.10
Selenium	1.0	mg/l	<0.10	<0.10	<0.10	<0.10	<0.10	<0.10	<0.10	<0.10	<0.10
TCLP Extraction Fluid Data:											
Extraction Fluid	–		No.1	No.2	No.2	No.2	No.2	No.2	No.2	No.2	No.1
pH w/ Deionized Water	–	pH Units	11.50	11.18	11.74	11.76	11.76	12.61	12.71	12.21	10.88
pH after Addition of 1 Normal HCL	–	pH Units	1.90	10.39	11.60	11.37	11.59	11.48	12.20	11.95	2.07
pH of TCLP Extract	–	pH Units	5.20	6.31	12.44	12.55	12.45	12.36	12.66	12.15	5.33
Amount of Sample Extracted	–	g	100	100	100	100	100	100	100	100	80
TCLP Volatile Organic Analysis : (8260)											
Benzene	0.5	ug/l	<50	<50	<50	<50	<50	<50	<50	<50	<50
2-Butanone	200.0	ug/l	<5000	<5000	<5000	<5000	<5000	<5000	<5000	<5000	<5000
Carbon Tetrachloride	0.5	ug/l	<50	<50	<50	<50	<50	<50	<50	<50	<50
Chlorobenzene	100.0	ug/l	<1000	<1000	<1000	<1000	<1000	<1000	<1000	<1000	<1000
Chloroform	6.0	ug/l	<500	<500	<500	<500	<500	<500	<500	<500	<500
1,2-Dichloroethane	0.5	ug/l	<50	<50	<50	<50	<50	<50	<50	<50	<50
1,1-Dichloroethene	0.7	ug/l	<50	<50	<50	<50	<50	<50	<50	<50	<50
Tetrachloroethene	0.7	ug/l	<50	<50	<50	<50	<50	<50	<50	<50	<50
Trichloroethene	0.5	ug/l	<50	<50	<50	<50	<50	<50	<50	<50	<50
Vinyl Chloride	0.2	ug/l	<50	<50	<50	<50	<50	<50	<50	<50	<25
TCLP Base/Neutral Extractables : (8270)											
1,4-Dichlorobenzene	7.5	ug/l	<500	<500	<500	<500	<500	<500	<500	<500	<500
2,4-Dinitrotoluene	0.13	ug/l	<50	<50	<50	<50	<50	<50	<50	<50	<50
Hexachlorobutadiene	0.5	ug/l	<50	<50	<50	<50	<50	<50	<50	<50	<50
Hexachlorobenzene	0.13	ug/l	<100	<100	<100	<100	<100	<100	<100	<100	<100
Hexachloroethane	3.0	ug/l	<500	<500	<500	<500	<500	<500	<500	<500	<500
Nitrobenzene	2.0	ug/l	<100	<100	<100	<100	<100	<100	<100	<100	<100
Pyridine	5.0	ug/l	<500	<500	<500	<500	<500	<500	<500	<500	<500

TABLE 5-6 (Continued)
SUMMARY OF
ENVIRONMENTAL MONITORING
SOLID WASTE AND BY PRODUCT
ESP INLET HOPPER

SAMPLE LOCATION : ESP INLET HOPPERS #7 & #8 (5A)

PARAMETERS	REGULATORY LIMIT (mg/l)* (if established)	UNITS	BASELINE (9-2-92)	BASELINE (9-22-93)	PARAMETRIC (9-23-93)	PARAMETRIC (9-24-93)	PARAMETRIC (9-24-93)	OPTIMIZATION (12-7-93)	OPTIMIZATION (12-8-93)	OPERATIONS (5-17-94)	POST-LIFAC (6-18-94)
TCLP Acid Extractables : (8270)											
Total Cresol	200.0	ug/l	<5000	<5000	<5000	<5000	<5000	<5000	<5000	<5000	<5000
Pentachlorophenol	100.0	ug/l	<5000	<5000	<5000	<5000	<5000	<5000	<5000	<5000	<5000
2,4,5-Trichlorophenol	400.0	ug/l	<5000	<5000	<5000	<5000	<5000	<5000	<5000	<5000	<5000
2,4,6-Trichlorophenol	2.0	ug/l	<100	<100	<100	<100	<100	<100	<100	<100	<100
Acetone	–	ug/kg	<13000	<13000	<13000	<13000	<13000	<13000	<13000	<500	<500
Benzene	0.5	ug/kg	<630	<630	<630	<630	<630	<630	<630	<25	<25
Bromodichloromethane	–	ug/kg	<630	<630	<630	<630	<630	<630	<630	<25	<25
Bromoform	–	ug/kg	<630	<630	<630	<630	<630	<630	<630	<25	<25
Bromomethane	–	ug/kg	<1300	<1300	<1300	<1300	<1300	<1300	<1300	<50	<50
2-Butanone	200.0	ug/kg	<13000	<13000	<13000	<13000	<13000	<13000	<13000	<50	<50
Carbon Disulfide	–	ug/kg	730	<630	<630	<630	<630	<630	<630	<25	<25
Carbon Tetrachloride	0.5	ug/kg	<630	<630	<630	<630	<630	<630	<630	<25	<25
Chlorobenzene	100.0	ug/kg	<630	<630	<630	<630	<630	<630	<630	<25	<25
Chlorodibromomethane	–	ug/kg	<630	<630	<630	<630	<630	<630	<630	<25	<25
Chloroethane	–	ug/kg	<1300	<1300	<1300	<1300	<1300	<1300	<1300	<50	<50
Chloromethane	–	ug/kg	<1300	<1300	<1300	<1300	<1300	<1300	<1300	<50	<50
Chloroform	6.0	ug/kg	<630	<630	<630	<630	<630	<630	<630	<25	<25
1,1-Dichloroethane	–	ug/kg	<630	<630	<630	<630	<630	<630	<630	<25	<25
1,2-Dichloroethane	0.5	ug/kg	<630	<630	<630	<630	<630	<630	<630	<25	<25
1,1-Dichloroethene	0.7	ug/kg	<630	<630	<630	<630	<630	<630	<630	<25	<25
cis-1,2-Dichloroethene	–	ug/kg	<630	<630	<630	<630	<630	<630	<630	<25	<25
trans-1,2-Dichloroethene	–	ug/kg	<630	<630	<630	<630	<630	<630	<630	<25	<25
1,2-Dichloropropane	–	ug/kg	<630	<630	<630	<630	<630	<630	<630	<25	<25
cis-1,3-Dichloropropene	–	ug/kg	<630	<630	<630	<630	<630	<630	<630	<25	<25
trans-1,3-Dichloropropene	–	ug/kg	<630	<630	<630	<630	<630	<630	<630	<25	<25
Ethylbenzene	–	ug/kg	<630	<630	<630	<630	<630	<630	<630	<25	<25
2-Hexanone	–	ug/kg	<6300	<6300	<6300	<6300	<6300	<6300	<6300	<250	<250
Methylene Chloride	–	ug/kg	<630	<630	<630	<630	<630	<630	<630	<25	<25
4-Methyl-2-Pentanone (MIBK)	–	ug/kg	<6300	<6300	<6300	<6300	<6300	<6300	<6300	<250	<250
Styrene	–	ug/kg	<630	<630	<630	<630	<630	<630	<630	<25	<25
1,1,2,2-Tetrachloroethane	–	ug/kg	<630	<630	<630	<630	<630	<630	<630	<25	<25
Tetrachloroethene	0.7	ug/kg	<630	<630	<630	<630	<630	<630	<630	<25	<25
Toluene	–	ug/kg	2200	<630	<630	<630	<630	<630	<630	<25	<25
1,1,1-Trichloroethane	–	ug/kg	<630	<630	<630	<630	<630	<630	<630	<25	<25
1,1,2-Trichloroethane	–	ug/kg	<630	<630	<630	<630	<630	<630	<630	<25	<25
Trichloroethene	0.5	ug/kg	<630	<630	<630	<630	<630	<630	<630	<25	<25
Vinyl Chloride	0.2	ug/kg	<1300	<1300	<1300	<1300	<1300	<1300	<1300	<50	<50
Xylenes (Total)	–	ug/kg	<630	<630	<630	<630	<630	<630	<630	<25	<25

* Regulatory limit units may differ from measured value units.

TABLE 5-7
SUMMARY OF
ENVIRONMENTAL MONITORING
SOLID WASTE AND BY PRODUCT
ESP OUTLET HOPPER ASH

SAMPLE LOCATION : ESP OUTLET HOPPERS #5 & #6 (5B)

PARAMETERS	REGULATORY LIMIT (mg/l)* (if established)	UNITS	PARAMETRIC (9-23-93)	PARAMETRIC (9-24-93)	OPTIMIZATION (12-7-93)	OPTIMIZATION (12-8-93)	OPERATIONS (5-17-94)	POST-LIFAC (8-16-94)
Alkalinity	–	mg/l CaCO3	2840	2990	2560	2400	2740	42.0
pH	–	pH units	12.47	12.46	12.52	12.52	12.70	8.21
Sulfate	–	mg/l	1700	1200	1600	1600	1700	720
Percent Carbon	–	%	NA**	4.1	2.7	2.8	2.9	6.0
Total Metals:								
Arsenic (total)	5.0	mg/kg	–	95	67	68	52	21
TCLP Metals :								
Silver	5.0	mg/l	<0.10	<0.10	<0.10	<0.10	<0.10	<0.10
Arsenic	5.0	mg/l	<0.10	<0.10	<0.10	<0.10	<0.10	0.29
Barium	100.0	mg/l	<10	<10	<10	<10	<10	<10
Cadmium	1.0	mg/l	<0.10	<0.10	<0.10	<0.10	<0.10	0.21
Chromium	5.0	mg/l	1.1	<0.10	<0.10	<0.10	<0.10	0.27
Mercury	0.2	mg/l	<0.010	<0.010	<0.010	<0.010	<0.010	<0.010
Lead	5.0	mg/l	<0.10	<0.10	<0.10	<0.10	<0.10	<0.10
Selenium	1.0	mg/l	<0.10	<0.10	<0.10	<0.10	<0.10	<0.10
TCLP Extraction Fluid Data:								
Extraction Fluid			No.2	No.2	No.2	No.2	No.2	No.1
pH w/ Deionized Water	–	pH Units	12.17	11.69	12.69	12.69	12.11	8.91
pH after Addition of 1 Normal HCL	–	pH Units	12.05	11.51	12.03	12.14	11.90	1.77
pH of TCLP Extract	–	pH Units	12.02	12.51	12.13	12.66	12.13	4.99
Amount of Sample Extracted	–	g	50.0	100	100	100	100	80
TCLP Volatile Organic Analysis : (8260) (3)								
Benzene	0.5	ug/l	<50	<50	<50	<50	<50	<50
2-Butanone	200.0	ug/l	<5000	<5000	<5000	<5000	<5000	<5000
Carbon Tetrachloride	0.5	ug/l	<50	<50	<50	<50	<50	<50
Chlorobenzene	100.0	ug/l	<1000	<1000	<1000	<1000	<1000	<1000
Chloroform	6.0	ug/l	<500	<500	<500	<500	<500	<500
1,2-Dichloroethane	0.5	ug/l	<50	<50	<50	<50	<50	<50
1,1-Dichloroethene	0.7	ug/l	<50	<50	<50	<50	<50	<50
Tetrachloroethene	0.7	ug/l	<50	<50	<50	<50	<50	<50
Trichloroethene	0.5	ug/l	<50	<50	<50	<50	<50	<50
Vinyl Chloride	0.2	ug/l	<50	<50	<50	<50	<50	<5.0
TCLP Base/Neutral Extractables : (8270) (3)								
1,4-Dichlorobenzene	7.5	ug/l	<500	<500	<500	<500	<500	<500
2,4-Dinitrotoluene	0.13	ug/l	<50	<50	<50	<50	<50	<50
Hexachlorobutadiene	0.5	ug/l	<50	<50	<50	<50	<50	<50
Hexachlorobenzene	0.13	ug/l	<100	<100	<100	<100	<100	<100
Hexachloroethane	3.0	ug/l	<500	<500	<500	<500	<500	<500
Nitrobenzene	2.0	ug/l	<100	<100	<100	<100	<100	<100
Pyridine	5.0	ug/l	<500	<500	<500	<500	<500	<500

TABLE 5-7 (Continued)
SUMMARY OF
ENVIRONMENTAL MONITORING
SOLID WASTE AND BY PRODUCT
ESP OUTLET HOPPER ASH

SAMPLE LOCATION : ESP OUTLET HOPPERS #5 & #6 (5B)

PARAMETERS	REGULATORY LIMIT (mg/l)* (if established)	UNITS	PARAMETRIC (9-23-93)	PARAMETRIC (9-24-93)	OPTIMIZATION (12-7-93)	OPTIMIZATION (12-8-93)	OPERATIONS (5-17-94)	POST-LIFAC (8-16-94)
TCLP Acid Extractables : (8270) (3)								
Total Cresol	200.0	ug/l	<5000	<5000	<5000	<5000	<5000	<5000
Pentachlorophenol	100.0	ug/l	<5000	<5000	<5000	<5000	<5000	<5000
2,4,5-Trichlorophenol	400.0	ug/l	<5000	<5000	<5000	<5000	<5000	<5000
2,4,6-Trichlorophenol	2.0	ug/l	<100	<100	<100	<100	<100	<100
Acetone	-	ug/kg	<500	<13000	<13000	<13000	<100	<100
Benzene	0.5	ug/kg	<25	<630	<630	<630	<54	<5.0
Bromodichloromethane	-	ug/kg	<25	<630	<630	<630	<5.0	<5.0
Bromoform	-	ug/kg	<25	<630	<630	<630	<5.0	<5.0
Bromomethane	-	ug/kg	<50	<1300	<1300	<1300	<10	<10
2-Butanone	200.0	ug/kg	<500	<13000	<13000	<13000	<10	<10
Carbon Disulfide	-	ug/kg	<25	<630	<630	<630	<5.0	<5.0
Carbon Tetrachloride	0.5	ug/kg	<25	<630	<630	<630	<5.0	<5.0
Chlorobenzene	100.0	ug/kg	<25	<630	<630	<630	<5.0	<5.0
Chlorodibromomethane	-	ug/kg	<25	<630	<630	<630	<5.0	<5.0
Chloroethane	-	ug/kg	<50	<1300	<1300	<1300	<10	<10
Chloromethane	-	ug/kg	<50	<1300	<1300	<1300	<10	<10
Chloroform	6.0	ug/kg	<25	<630	<630	<630	<5.0	<5.0
1,1-Dichloroethane	-	ug/kg	<25	<630	<630	<630	<5.0	<5.0
1,2-Dichloroethane	0.5	ug/kg	<25	<630	<630	<630	<5.0	<5.0
1,1-Dichloroethene	0.7	ug/kg	<25	<630	<630	<630	<5.0	<5.0
cis-1,2-Dichloroethene	-	ug/kg	<25	<630	<630	<630	<5.0	<5.0
trans-1,2-Dichloroethene	-	ug/kg	<25	<630	<630	<630	<5.0	<5.0
1,2-Dichloropropane	-	ug/kg	<25	<630	<630	<630	<5.0	<5.0
cis-1,3-Dichloropropene	-	ug/kg	<25	<630	<630	<630	<5.0	<5.0
trans-1,3-Dichloropropene	-	ug/kg	<25	<630	<630	<630	<5.0	<5.0
Ethylbenzene	-	ug/kg	<25	<630	<630	<630	<5.0	<5.0
2-Hexanone	-	ug/kg	<250	<6300	<6300	<6300	<50	<50
Methylene Chloride	-	ug/kg	900	<630	<630	<630	<5.0	30
4-Methyl-2-Pentanone (MIBK)	-	ug/kg	<250	<6300	<6300	<6300	<50	<50
Styrene	-	ug/kg	<25	<630	<630	<630	<5.0	<5.0
1,1,2,2-Tetrachloroethane	-	ug/kg	<25	<630	<630	<630	<5.0	<5.0
Tetrachloroethene	0.7	ug/kg	<25	<630	<630	<630	<5.0	<5.0
Toluene	-	ug/kg	40	<630	<630	<630	5.0	<5.0
1,1,1-Trichloroethane	-	ug/kg	<25	<630	<630	<630	<5.0	<5.0
1,1,2-Trichloroethane	-	ug/kg	<25	<630	<630	<630	<5.0	<5.0
Trichloroethene	0.5	ug/kg	<25	<630	<630	<630	<5.0	<5.0
Vinyl Chloride	0.2	ug/kg	<50	<1300	<1300	<1300	<10	<10
Xylenes (Total)	-	ug/kg	<25	<630	<630	<630	<5.0	<5.0

* Regulatory limit units may differ from measured value units.

TABLE 5-8
SUMMARY OF
ENVIRONMENTAL MONITORING
SOLID WASTE AND BY PRODUCT
BOILER BOTTOM ASH (SOLID)

SAMPLE LOCATION : BOILER BOTTOM ASH BIN (6B)

PARAMETERS	REGULATORY LIMIT (mg/l)* (if established)	UNITS	BASELINE (9-22-93)	PARAMETRIC (9-23-93) 6B-1	(9-23-93) 6B-2	(9-24-93)	OPTIMIZATION (12-7-93)	(12-8-93)	OPERATIONS (5-17-94)	POST-LIFAC (8-16-94)
Alkalinity	–	mg/l CaCO3	17	20	51	123	87	168	448	7.0
pH	–	pH units	8.57	10.47	10.98	11.14	11.21	11.86	12.70	7.96
Sulfate	–	mg/l	8.6	49	80	240	110	920	570	16
Percent Carbon	–	%	2.5	0.54	0.32	1.5	0.5	1.1	1.9	46.0
Total Metals:										
Arsenic (total)	5.0	mg/kg	10	–	–	9.6	5.4	8.7	8.4	0.56
TCLP (5) Metals :										
Silver	5.0	mg/l	<0.10	<0.10	<0.10	<0.10	<0.10	<0.10	<0.10	<0.10
Arsenic	5.0	mg/l	<0.10	<0.10	<0.10	<0.10	<0.10	<0.10	<0.10	<0.10
Barium	100.0	mg/l	<10	<10	<10	<10	<10	<10	<10	<10
Cadmium	1.0	mg/l	<0.10	<0.10	<0.10	<0.10	<0.10	<0.10	<0.10	<0.10
Chromium	5.0	mg/l	<0.10	<0.10	<0.10	<0.10	<0.10	<0.10	<0.10	<0.10
Mercury	0.2	mg/l	<0.010	<0.010	<0.010	<0.010	<0.010	<0.010	<0.010	<0.010
Lead	5.0	mg/l	<0.10	<0.10	<0.10	<0.10	<0.10	<0.10	<0.10	<0.10
Selenium	1.0	mg/l	<0.10	<0.10	<0.10	<0.10	<0.10	<0.10	<0.10	<0.10
TCLP Extraction Fluid Data:										
Extraction Fluid			No.1	No.1	No.1	No.1	No.1	No.2	No.1	No.1
pH w/ Deionized Water	–	pH Units	9.70	10.00	9.57	9.48	10.61	11.16	11.26	8.46
pH after Addition of 1 Normal HCL	–	pH Units	2.93	1.62	1.68	2.02	1.35	8.69	2.08	1.38
pH of TCLP Extract	–	pH Units	5.21	4.97	3.76	5.69	5.02	4.78	6.89	4.92
Amount of Sample Extracted	–	g	100	100	100	100	100	100	100	80
TCLP Volatile Organic Analysis : (8260)										
Benzene	0.5	ug/l	<50	<50	<50	<50	<50	<50	<50	<50
2-Butanone	200.0	ug/l	<5000	<5000	<5000	<5000	<5000	<5000	<5000	<5000
Carbon Tetrachloride	0.5	ug/l	<50	<50	<50	<50	<50	<50	<50	<50
Chlorobenzene	100.0	ug/l	<1000	<1000	<1000	<1000	<1000	<1000	<1000	<1000
Chloroform	6.0	ug/l	<500	<500	<500	<500	<500	<500	<500	<500
1,2-Dichloroethane	0.5	ug/l	<50	<50	<50	<50	<50	<50	<50	<50
1,1-Dichloroethene	0.7	ug/l	<50	<50	<50	<50	<50	<50	<50	<50
Tetrachloroethene	0.7	ug/l	<50	<50	<50	<50	<50	<50	<50	<50
Trichloroethene	0.5	ug/l	<50	<50	<50	<50	<50	<50	<50	<50
Vinyl Chloride	0.2	ug/l	<50	<50	<50	<50	<50	<50	<50	<5.0
TCLP Base/Neutral Extractables : (8270)										
1,4-Dichlorobenzene	7.5	ug/l	<500	<500	<500	<500	<500	<500	<500	<500
2,4-Dinitrotoluene	0.13	ug/l	<50	<50	<50	<50	<50	<50	<50	<50
Hexachlorobutadiene	0.5	ug/l	<50	<50	<50	<50	<50	<50	<50	<50
Hexachlorobenzene	0.13	ug/l	<100	<100	<100	<100	<100	<100	<100	<100
Hexachloroethane	3.0	ug/l	<500	<500	<500	<500	<500	<500	<500	<500
Nitrobenzene	2.0	ug/l	<100	<100	<100	<100	<100	<100	<100	<100
Pyridine	5.0	ug/l	<500	<500	<500	<500	<500	<500	<500	<500

TABLE 5-8 (Continued)
SUMMARY OF
ENVIRONMENTAL MONITORING
SOLID WASTE AND BY PRODUCT
BOILER BOTTOM ASH (SOLID)

SAMPLE LOCATION : BOILER BOTTOM ASH BIN (6B)

PARAMETERS	REGULATORY LIMIT (mg/l)*	UNITS	BASELINE (9-22-93)	PARAMETRIC (9-23-93) 6B-1	(9-23-93) 6B-2	(9-24-93)	OPTIMIZATION (12-7-93)	(12-8-93)	OPERATIONS (5-17-94)	POST-LIFAC (8-16-94)
TCLP Acid Extractables : (8270)										
Total Cresol	200.0	ug/l	<5000	<5000	<5000	<5000	<5000	<5000	<5000	<5000
Pentachlorophenol	100.0	ug/l	<5000	<5000	<5000	<5000	<5000	<5000	<5000	<5000
2,4,5-Trichlorophenol	400.0	ug/l	<5000	<5000	<5000	<5000	<5000	<5000	<5000	<5000
2,4,6-Trichlorophenol	2.0	ug/l	<100	<100	<100	<100	<100	<100	<100	<100
Acetone	-	ug/kg	<100	<100	<100	<13000	<100	<13000	<500	<100
Benzene	0.5	ug/kg	<5.0	<5.0	<5.0	<630	<5.0	<630	<25	<5.0
Bromodichloromethane	-	ug/kg	<5.0	<5.0	<5.0	<630	<5.0	<630	<25	<5.0
Bromoform	-	ug/kg	<5.0	<5.0	<5.0	<630	<5.0	<630	<25	<5.0
Bromomethane	-	ug/kg	<10	<10	<10	<1300	<10	<1300	<50	<10
2-Butanone	200.0	ug/kg	<100	<100	<100	<13000	<100	<13000	<50	<10
Carbon Disulfide	-	ug/kg	<5.0	<5.0	<5.0	<630	<5.0	<630	<25	<5.0
Carbon Tetrachloride	0.5	ug/kg	<5.0	<5.0	<5.0	<630	<5.0	<630	<25	<5.0
Chlorobenzene	100.0	ug/kg	<5.0	<5.0	<5.0	<630	<5.0	<630	<25	<5.0
Chlorodibromomethane	-	ug/kg	<5.0	<5.0	<5.0	<630	<5.0	<630	<25	<5.0
Chloroethane	-	ug/kg	<10	<10	<10	<1300	<10	<1300	<50	<10
Chloromethane	-	ug/kg	<10	<10	<10	<1300	<10	<1300	<50	<10
Chloroform	6.0	ug/kg	<5.0	<5.0	<5.0	<630	<5.0	<630	<25	<5.0
1,1-Dichloroethane	-	ug/kg	<5.0	<5.0	<5.0	<630	<5.0	<630	<25	<5.0
1,2-Dichloroethane	0.5	ug/kg	<5.0	<5.0	<5.0	<630	<5.0	<630	<25	<5.0
1,1-Dichloroethene	0.7	ug/kg	<5.0	<5.0	<5.0	<630	<5.0	<630	<25	<5.0
cis-1,2-Dichloroethene	-	ug/kg	<5.0	<5.0	<5.0	<630	<5.0	<630	<25	<5.0
trans-1,2-Dichloroethene	-	ug/kg	<5.0	<5.0	<5.0	<630	<5.0	<630	<25	<5.0
1,2-Dichloropropane	-	ug/kg	<5.0	<5.0	<5.0	<630	<5.0	<630	<25	<5.0
cis-1,3-Dichloropropene	-	ug/kg	<5.0	<5.0	<5.0	<630	<5.0	<630	<25	<5.0
trans-1,3-Dichloropropene	-	ug/kg	<5.0	<5.0	<5.0	<630	<5.0	<630	<25	<5.0
Ethylbenzene	-	ug/kg	<5.0	<5.0	<5.0	<630	<5.0	<630	<25	<5.0
2-Hexanone	-	ug/kg	<50	<50	<50	<6300	<50	<6300	<250	<50
Methylene Chloride	-	ug/kg	<5.0	8.0	<5.0	<630	13	<630	<25	12
4-Methyl-2-Pentanone (MIBK)	-	ug/kg	<50	<50	<50	<6300	<50	<6300	<250	<50
Styrene	-	ug/kg	<5.0	<5.0	<5.0	<630	<5.0	<630	<25	<5.0
1,1,2,2-Tetrachloroethane	-	ug/kg	<5.0	<5.0	<5.0	<630	<5.0	<630	<25	<5.0
Tetrachloroethene	0.7	ug/kg	<5.0	<5.0	<5.0	<630	<5.0	<630	<25	<5.0
Toluene	-	ug/kg	<5.0	<5.0	<5.0	<630	<5.0	<630	<25	<5.0
1,1,1-Trichloroethane	-	ug/kg	<5.0	<5.0	<5.0	<630	<5.0	<630	<25	<5.0
1,1,2-Trichloroethane	-	ug/kg	<5.0	<5.0	<5.0	<630	<5.0	<630	<25	<5.0
Trichloroethene	0.5	ug/kg	<5.0	<5.0	<5.0	<630	<5.0	<630	<25	<5.0
Vinyl Chloride	0.2	ug/kg	<10	<10	<10	<1300	<10	<1300	<50	<10
Xylenes (Total)	-	ug/kg	<5.0	<5.0	<5.0	<630	<5.0	<630	<25	<5.0

* Regulatory limit units may differ from measured value units.

TABLE 5-9
SUMMARY OF
ENVIRONMENTAL MONITORING
BOILER BOTTOM ASH (AQUEOUS)

SAMPLE LOCATION : BOILER BOTTOM ASH (AQUEOUS) (6A)

PARAMETERS	LIMITS (RP&L's NPDES Permit)	BASELINE (9-2-92)	PARAMETRIC (9-23-93) 6A-1	PARAMETRIC (9-23-93) 6A-2	PARAMETRIC (9-24-93)	OPTIMIZATION (12-7-93)	OPTIMIZATION (12-8-93)	OPERATIONS (5-17-94)	POST-LIFAC (8-16-94)
FLOW	REPORT	–	–	–	–	–	–	–	–
TSS (mg/l)	70	–	17	1	9	30	38	13	31
OIL & GREASE (mg/l)	15	–	<1.0	<1.0	<1.0	<1.0	<1.0	<1.0	<1.0
TOT. RESID. OXIDANTS (mg/l)	0.02	–	<1.0	<1.0	<.10	<1.0	<1.0	<0.050	<0.050
TEMPERATURE (F)	REPORT	–	–	–	–	–	–	–	–
AMMONIA (NH3) (mg/l)	1.8 (summer) 2.6 (winter)	–	0.11	0.13	0.15	<0.10	0.37	<0.10	<0.10
COPPER (mg/l)	0.05	–	0.014	<0.010	0.011	<0.010	0.012	<0.010	0.012
LEAD (mg/l)	0.02	–	<0.10	<0.10	<0.10	<0.10	<0.10	<0.10	<0.10
ZINC (mg/l)	0.46	–	0.026	0.023	<0.005	0.011	0.020	0.012	0.046
ALUMINUM (mg/l)	0.40	–	0.59	0.60	0.25	0.46	0.53	0.11	0.34
IRON (mg/l)	REPORT	–	0.20	0.18	0.061	0.16	0.11	<0.030	0.33
PCBS (mg/l)	REPORT	–	<1.0	<1.0	<1.0	<1.0	<1.0	<1.0	<1.0
ALKALINITY (mg CaCO3)	(per EMP)	111	182	200	65	31.1	40	254	186

(See footnotes for methodology on actual laboratory analytical reports attached in Appendix B)

TABLE 5-10
SUMMARY OF
ENVIRONMENTAL MONITORING
RP&L's NPDES DISCHARGE AND FEEDWATER
(1993)

		RP&L MONTHLY MONITORING (1993)*						FEEDWATER SAMPLE LOCATION (Z)				
PARAMETERS	LIMITS	JULY	AUG.	SEPT.	OCT.	NOV.	DEC.	(9-22-93)	(9-23-93)	(9-24-93)	(12-7-93)	(12-8-93)
FLOW	REPORT	–	–	–	–	–	–	–	–	–	–	–
TSS (mg/l)	70	17.9	20.4	19.1	13.1	19.5	15.4	2	73	<1	<1	9
OIL & GREASE (mg/l)	15	<1.0	<1.0	<1.1	<2.72	<1.82	<1.34	1.0	1.8	<1.0	<1.0	<1.0
TOT. RESID. OXIDANTS (mg/l)	0.02	<0.05	<0.05	<0.05	<0.05	<0.05	<0.05	<0.10	<1.0	0.12	<1.0	<1.0
TEMPERATURE (F)	REPORT	88.2	85.2	77.1	64.7	61.2	61.3	–	–	–	–	–
AMMONIA (NH3) (mg/l)	1.8 (SUM) 2.6 (WIN)	0.16	0.09	0.110	0.18	0.03	0.062	<0.10	0.14	0.14	<0.10	<0.10
COPPER (mg/l)	0.05	0.033	0.038	0.057	0.046	0.064	0.020	0.035	<0.01	0.013	<0.010	<0.010
LEAD (mg/l)	0.02	0.007	0.007	0.006	0.006	0.004	0.002	<0.10	<0.10	<0.10	<0.10	<0.10
ZINC (mg/l)	0.46	0.053	0.046	0.054	0.071	0.098	0.040	0.035	0.026	0.023	0.024	0.019
ALUMINUM (mg/l)	0.40	1.094	1.045	1.066	0.824	0.528	0.880	0.63	0.31	0.29	0.36	0.82
IRON (mg/l)	REPORT	1.281	0.612	0.936	1.040	1.747	0.280	0.056	0.20	0.099	0.057	0.73
pH (pH units)	6.0 MIN/9.0 MAX	7.5	7.5	7.7	7.4	7.7	7.8	–	–	–	–	–
PCBS (mg/l)	(EMP)	–	–	–	–	–	–	<1.0	<1.0	<1.0	<1.0	<1.0
ALKALINITY (mg CaCO3)	(EMP)	–	–	–	–	–	–	232	61	205	262	248

*RP&L monthly monitoring reports attached in Appendix E.

(See footnotes for methodology on actual laboratory analytical reports attached in Appendix B)

TABLE 5-10
SUMMARY OF
ENVIRONMENTAL MONITORING
RP&L's NPDES DISCHARGE AND FEEDWATER
(1994)

		RP&L MONTHLY MONITORING (1994)*								FEEDWATER SAMPLE LOCATION (Z)	
PARAMETERS	LIMITS	JAN	FEB	MAR	APR	MAY	JUNE	JULY	AUG	(5-17-94)	(8-16-94)
FLOW	REPORT	–	–	–	–	–	–	–	–	–	–
TSS (mg/l)	70	16.9	11.6	9.4	14.8	20.9	18.6	15.4	11.4	1	3
OIL & GREASE (mg/l)	15	<1.4	<1.09	2.31	1.78	<1.25	<1.31	<1.29	<1.1	1.1	<1.0
TOT. RESID. OXIDANTS (mg/l)	0.02	<0.05	<0.05	<0.05	<0.05	<0.05	<0.05	<0.05	<0.05	<0.05	<0.05
TEMPERATURE (F)	REPORT	59.5	60.3	64.2	66.2	75.6	84.4	–	–	–	–
AMMONIA (NH3) (mg/l)	1.8 (SUM) 2.6 (WIN)	0.25	0.183	0.140	0.164	0.226	0.182	–	–	<0.10	<0.10
COPPER (mg/l)	0.05	0.028	0.026	0.030	0.015	0.045	0.044	0.053	0.054	<0.010	<0.010
LEAD (mg/l)	0.02	0.004	0.004	0.008	0.004	0.009	0.010	0.009	0.006	<0.10	<0.10
ZINC (mg/l)	0.46	0.060	0.112	0.106	0.086	0.078	0.097	0.230	0.102	0.040	0.041
ALUMINUM (mg/l)	0.40	<0.003	1.243	0.834	1.440	1.149	0.960	0.580	0.400	0.14	<0.10
IRON (mg/l)	REPORT	0.606	0.566	0.438	1.840	0.700	0.646	0.714	0.447	0.045	0.051
pH (pH units)	6.0 MIN/9.0 MAX	7.6	7.7	8.0	7.6	7.7	7.8	7.5	7.7	–	–
PCBS (mg/l)	(EMP)	–	–	–	–	–	–	–	–	<1.0	<1.0
ALKALINITY (mg CaCO3)	(EMP)	–	–	–	–	–	–	–	–	264	209

*RP&L monthly monitoring reports attached in Appendix E.

(See footnotes for methodology on actual laboratory analytical reports attached in Appendix B)

6.0 REFERENCES

1. Baseline Environmental Monitoring Report - LIFAC Sorbent Injection Desulfurization Demonstration Project presented to the U.S. Department of Energy dated October 13, 1993.

2. Parametric and Optimization Tests Environmental Monitoring Report - LIFAC Sorbent Injection Desulfurization Demonstration Projected presented to the U.S. Department of Energy dated April 1, 1994.

APPENDIX A

PARTICULATE MATTER TEST DATA

LIFAC NA DEMONSTRATION PROJECT
RICHMOND POWER AND LIGHT
WHITEWATER VALLEY GENERATING UNIT #2

OPERATIONS AND POST-LIFAC TESTS
ENVIRONMENTAL MONITORING REPORT

ICF KAISER ENGINEERS, INC.
PITTSBURGH, PENNSYLVANIA

TABLE 4-1

RICHMOND POWER AND LIGHT
RICHMOND, IN
WHITEWATER VALLEY GENERATING STATION UNIT #2

PARTICULATE MATTER TEST DATA: MAY 17, 1994
WITH RECYCLE

	Test Run Test Date Units	1 5/17/94	2 5/17/94	3[5] 5/17/94	Average
Process Conditions[1]					
Power Generation	(MW)	58	58	58	58
Coal Feed Rate	(lb/hr)	54643	51534	52274	52817
Heat Input	(MBtu/hr)	627.7	592.0	600.5	606.7
Particulate Matter Loadings					
Concentration	(gr/dscf)	0.0449	0.0484	0.0600	0.0511
Mass Flow Rate	(lb/hr)	63.32	70.31	84.02	72.55
Mass Emission/Heat Input[2]	(lb/MBtu)	0.102	0.120	0.141	0.121 (0.121)[6]
Mass Emission/Heat Input[3]	(lb/MBtu)	0.092	0.097	0.121	0.103 (0.103)[6]
Duct Conditions					
Average Flow Rate	(acfm)	240611	249970	246004	245528
Dry Standard Flow Rate	(dscfm)	164594	169556	163452	165867
Temperature	(°F)	231	237	236	235
Percent Moisture	(%)	8.77	8.82	10.82	9.47
Percent O_2[4]	(%)	6.6	6.3	6.4	6.43
Percent CO_2[4]	(%)	13.4	13.3	13.3	13.33
Sampling Conditions					
Test Clock Times		10:02 to 11:22	12:17 to 13:29	14:12 to 15:22	
Sampling Time	(minutes)	64	64	64	
Sampling Volume	(dscf)	43.496	46.885	44.956	
Isokinetics	(%)	96	101	100	

Notes:
[1] Only Unit #2 was operating for testing
[2] Based on measured coal feed rates and heating values.
[3] Based on EPA Method 19 (F factor method).
[4] Percent O_2 and CO_2 are collected as grab sample and analyzed with a Orsat gas analyzer
[5] Soot blow during sampling period.
[6] Numbers in parentheses indicate correction for soot blowing.

TABLE 4-2

RICHMOND POWER AND LIGHT
RICHMOND, IN
WHITEWATER VALLEY GENERATING STATION UNIT #2

OPACITY MEASUREMENTS: MAY 17, 1994

5/17/94

Test Run	Maximum[1] Opacity (%)	Average[2] Opacity (%)
1	14	11
2	13	12
3	18	14

Notes: [1] Highest 6 minute reading during test run period.
[2] Average of all six minute readings during test run periods.

LIFAC RICHMOND POWER AND LIGHT
UNIT #2 AIR EMISSIONS TESTING
TEST DATE: MAY 17, 1994
PROJECT NO.: 91001-002-33

DETERMINATION OF FURNACE HEAT INPUT AND ACTUAL PARTICULATE MATTER MASS EMISSIONS PER HEAT INPUT

TEST DATE	STACK TEST TIME	COAL ANALYSIS SAMPLE ID #	COAL HEATING VALUE AS REC'D (BTU/lb)	COAL FEED RATE (lb/min)	COAL FEED RATE (lb/hr)	HEAT INPUT (MMBTU/hr)	PARTICULATE MATTER EMISSION RATE (lb/hr)	ACTUAL PM MASS EMISSIONS PER HEAT INPUT (lb/MMBTU)
5-17-94	10:02-11:22	Stack Test #1	11,368	911	54,660	621.4	63.3	0.1019
5-17-94	12:17-13:29	Stack Test #2	11,343	859	51,540	584.6	70.3	0.1203
5-17-94	14:12-15:22 *	Stack Test #3	11,432	871	52,260	597.4	84.0	0.1406
Average			11,381		52,820	601.1	72.6	0.1209

* = Soot blown during test run

LIFAC RICHMOND POWER AND LIGHT
UNIT #2 AIR EMISSIONS TESTING
TEST DATE: MAY 17, 1994
PROJECT NO.: 91001-002-33

CORRECTION FOR SOOT BLOWING FOR ACTUAL PARTICULATE MATTER MASS EMISSIONS PER HEAT INPUT

$$E = Ecc * [((A+B)*S)/(A*R)] + Eccc * [((R-S)/R) - ((B*S)/(A*R))]$$

where:
E = Average emission concentration (lb/MMBtu)
Ecc = Average emission concentration for sootblowing run (lb/MMBtu)
Eccc = Average emission concentration for non-sootblowing runs (lb/MMBtu)
A = Hours of sootblowing during sootblowing run (hours)
B = Hours of not sootblowing during sootblowing run (hours)
S = Average hours of sootblowing per day (hours)
R = Average hours of operation of the source tested per day (hours)

TEST DATE	Ecc (lb/MMBtu)	Eccc (lb/MMBtu)	A (hours)	B (hours)	S (hours)	R (hours)	E (lb/MMBtu)
5-17-94	0.1406	0.1111	0.917	0.15	7	24	0.1211

LIFAC RICHMOND POWER AND LIGHT
UNIT #2 AIR EMISSIONS TESTING
TEST DATE: MAY 17, 1994
PROJECT NO.: 91001-002-33

DETERMINATION OF MASS EMISSIONS PER HEAT INPUT BASED ON EPA METHOD 19, 40 CFR 60

$$E = Cd * Fd * (20.9/(20.9 - \%O2d))$$

where:
E Mass Emissions per Heat Input, lb/MMBTU
Cd = Particulate matter concentration, lb/dscf
Fd = F Factor (dry basis) for bituminous coal, 9780 dscf/MMBTU
20.9 = percent of oxygen in ambient air
%O2d = Percent oxygen by volume (dry basis)

TEST DATE	TEST TIME	Cd (gr/dscf)	Cd (lb/dscf)	Fd (dscf/MMBTU)	%O2d (%)	E (lb/MMBTU)
5-17-94	9:30-10:44	0.0449	6.41E-06	9,780	6.60	0.0917
5-17-94	12:05-13:17	0.0484	6.91E-06	9,780	6.30	0.0968
5-17-94	14:20-15:36	0.0600	8.57E-06	9,780	6.40	0.1208
Average		0.0511				0.1031

TABLE 4-1

RICHMOND POWER AND LIGHT
RICHMOND, IN
WHITEWATER VALLEY GENERATING STATION UNIT #2

PARTICULATE MATTER TEST DATA: AUGUST 16, 1994

	Test Run Test Date Units	1 8/16/94	2[5] 8/16/94	3 8/16/94	Average
Process Conditions[1]					
Power Generation	(MW)	64	64	64	64
Coal Feed Rate	(lb/hr)	57150	56880	57120	57050
Heat Input	(MBtu/hr)	653.2	658.6	656.9	656.2
Particulate Matter Loadings					
Concentration	(gr/dscf)	0.0568	0.0661	0.0653	0.0627
Mass Flow Rate	(lb/hr)	93.93	97.37	96.90	96.07
Mass Emission/Heat Input[2]	(lb/MBtu)	0.144	0.148	0.148	0.146 (0.146)[6]
Mass Emission/Heat Input[3]	(lb/MBtu)	0.104	0.122	0.121	0.116 (0.116)[6]
Duct Conditions					
Average Flow Rate	(acfm)	324505	295666	292128	304100
Dry Standard Flow Rate	(dscfm)	193083	171780	173239	179367
Temperature	(°F)	337	340	335	337
Percent Moisture	(%)	8.5	10.3	9.0	9.3
Percent O_2[4]	(%)	5.0	5.1	5.1	5.1
Percent CO_2[4]	(%)	13.8	13.8	13.8	13.8
Sampling Conditions					
Test Clock Times		12:20 to 13:38	14:30 to 15:48	16:35 to 17:49	
Sampling Time	(minutes)	64	64	64	
Sampling Volume	(dscf)	33.536	55.054	53.718	
Isokinetics	(%)	102	102	99	

Notes:
[1] Only Unit #2 was operating for testing
[2] Based on measured coal feed rates and heating values.
[3] Based on EPA Method 19 (F factor method).
[4] Percent O_2 and CO_2 are collected as grab sample and analyzed with a Orsat gas analyzer
[5] Soot blow during sampling period.
[6] Numbers in parentheses indicate correction for soot blowing.

TABLE 4-2

RICHMOND POWER AND LIGHT
RICHMOND, IN
WHITEWATER VALLEY GENERATING STATION UNIT #2

OPACITY MEASUREMENTS: AUGUST 16, 1994

8/16/94

Test Run	Maximum[1] Opacity (%)	Average[2] Opacity (%)
1	9.5	7.9
2	10	8.2
3	9.5	7.8

Notes: [1] Highest 6 minute reading during test run period.
[2] Average of all six minute readings during test run periods.

LIFAC RICHMOND POWER AND LIGHT
UNIT #2 AIR EMISSIONS TESTING
TEST DATES: AUGUST 16, 1994
PROJECT NO.: 91001-002-33

DETERMINATION OF FURNACE HEAT INPUT AND ACTUAL PARTICULATE MATTER MASS EMISSIONS PER HEAT INPUT

TEST DATE	STACK TEST TIME	COAL ANALYSIS SAMPLE ID #	COAL HEATING VALUE AS REC'D (BTU/lb)	COAL FEED RATE (lb/min)	COAL FEED RATE (lb/hr)	HEAT INPUT (MMBTU/hr)	PARTICULATE MATTER EMISSION RATE (lb/hr)	ACTUAL PM MASS EMISSIONS PER HEAT INPUT (lb/MMBTU)
8-16-94	12:20-13:38	Stack Test #1	11,429	953	57,150	653.2	93.9	0.1438
8-16-94	14:30-15:48 *	Stack Test #2	11,578	948	56,880	658.6	97.4	0.1479
8-16-94	16:35-17:49	Stack Test #3	11,500	952	57,120	656.9	96.9	0.1475
Average			11,502		57,050	656.2	96.1	0.1464

* = Soot blown during test run

LIFAC RICHMOND POWER AND LIGHT
UNIT #2 AIR EMISSIONS TESTING
TEST DATES: AUGUST 16, 1994
PROJECT NO.: 91001-002-33

CORRECTION FOR SOOT BLOWING FOR ACTUAL PARTICULATE MATTER MASS EMISSIONS PER HEAT INPUT

$$E = Ecc * [((A+B)*S)/(A*R)] + Eccc * [((R-S)/R) - ((B*S)/(A*R))]$$

where:
E = Average emission concentration (lb/MMBtu)
Ecc = Average emission concentration for sootblowing run (lb/MMBtu)
Eccc = Average emission concentration for non-sootblowing runs (lb/MMBtu)
A = Hours of sootblowing during sootblowing run (hours)
B = Hours of not sootblowing during sootblowing run (hours)
S = Average hours of sootblowing per day (hours)
R = Average hours of operation of the source tested per day (hours)

TEST DATE	Ecc (lb/MMBtu)	Eccc (lb/MMBtu)	A (hours)	B (hours)	S (hours)	R (hours)	E (lb/MMBtu)
8-16-94	0.1479	0.1457	1.17	0.13	7	24	0.1464

LIFAC RICHMOND POWER AND LIGHT
UNIT #2 AIR EMISSIONS TESTING
TEST DATES: AUGUST 16, 1994
PROJECT NO.: 91001-002-33

DETERMINATION OF MASS EMISSIONS PER HEAT INPUT BASED ON EPA METHOD 19, 40 CFR 60

$$E = Cd * Fd * (20.9/(20.9 - \%O2d))$$

where:
E Mass Emissions per Heat Input, lb/MMBTU
Cd = Particulate matter concentration, lb/dscf
Fd = F Factor (dry basis) for bituminous coal, 9780 dscf/MMBTU
20.9 = percent of oxygen in ambient air
%O2d = Percent oxygen by volume (dry basis)

TEST DATE	TEST TIME	Cd (gr/dscf)	Cd (lb/dscf)	Fd (dscf/MMBTU)	%O2d (%)	E (lb/MMBTU)
8-16-94	12:20-13:38	0.0568	8.11E-06	9,780	5.00	0.1043
8-16-94	14:30-15:48	0.0661	9.44E-06	9,780	5.10	0.1222
8-16-94	16:35-17:49	0.0653	9.33E-06	9,780	5.10	0.1207
Average		0.0627				0.1157

APPENDIX B

ANALYTICAL RESULTS:
AQUEOUS AND SOLID WASTE SAMPLES

LIFAC NA DEMONSTRATION PROJECT
RICHMOND POWER AND LIGHT
WHITEWATER VALLEY GENERATING UNIT #2

OPERATIONS AND POST-LIFAC TESTS
ENVIRONMENTAL MONITORING REPORT

ICF KAISER ENGINEERS, INC.
PITTSBURGH, PENNSYLVANIA

Antech Ltd.

One Triangle Drive • Export, Pennsylvania 15632 • Phone: (412) 733-1161 • Fax: (412) 327-7793

June 7, 1994

Ms. Kathleen D. Conner
ICF Kaiser Engineers, Inc.
Four Gateway Center
Pittsburgh, PA 15222-1207

Water/Waste Characterization: 91001-002-33
LIFAC
Antech Ltd. Project No. 94-1771

Dear Ms. Conner:

Enclosed are analytical results for the samples submitted by ICF Kaiser Engineers, Inc. The samples were received and logged in for analysis on May 18, 1994.

Appropriate U.S. Environmental Protection Agency methods were used and are indicated accordingly on the data tables. Appropriate quality assurance/quality control analyses were performed in accordance with Antech Ltd.'s Statement of Qualifications. If you have any questions, please call me.

Sincerely,

Edward W. Kifer

Edward W. Kifer, Ph.D.
Inorganic Chemistry Manager

EWK:aeb

Enclosures

ANTECH LTD.
CASE NARRATIVE

I. GENERAL:

A: PROJECT NUMBERS:

ANTECH LTD.: 94-1771
CLIENT: 91001-002-33

B: SAMPLE IDENTIFICATIONS:

ANTECH LTD.: 9405-1533 through 9405-1539
CLIENT: 2, 6A, 3, 4, 5A, 5B, and 6B

C: SHIPPING/RECEIVING COMMENTS:

None

II. PREPARATION/ANALYSIS COMMENTS:

A: PREPARATION:

None

B: GENERAL CHEMISTRY:

None

C: METALS:

None

D: ORGANICS:

1. VOLATILES:
Total detection limits have been elevated due to matrix interference.

2. SEMIVOLATILES:
None

3. PCBS:
None

III. GENERAL COMMENTS:

Trailing zeroes and decimal places appearing on the data should not be interpreted as precision of the analytical procedure, but rather as a result of reporting format. Please refer to the enclosed TCLP Regulatory Levels table for appropriate regulatory levels and hazardous waste numbers.

Table 1
Polychlorinated Biphenyl Data Table
EPA Method 8080[1]
ICF Kaiser Engineers, Inc.
Antech Ltd. Project No. 94-1771
Water Characterization; 91001-002-33
LIFAC

Antech Sample ID	Client Sample ID	Date Collected	Parameter Identification: Polychlorinated Biphenyls µg/l	Parameter Identification: Aroclor Source
9405-1533	2	5/17/94	<1.0	NONE
9405-1534	6A	5/17/94	<1.0	NONE
9405-1540	Method Blank	5/18/94	<1.0	NONE

(1) U.S. Environmental Protection Agency, 1987, Test Methods for Evaluating Solid Waste, SW-846, 3rd ed., Office of Solid Waste and Emergency Response, Washington, DC.

Table 2
General Data Table
ICF Kaiser Engineers, Inc.
Antech Ltd. Project No. 94-1771
Water Characterization; 91001-002-33
LIFAC

Parameter	Analytical Method	Units	Sample Identification		
			9405-1533 2 Z (5/17/94)	9405-1534 6A (5/17/94)	9405-1540 Method Blank (5/18/94)
Alkalinity (Total)	310.2(1)	mg/l $CaCO_3$	264	254	<2.00
Ammonia	350.1(1)	mg/l NH_3-N	<0.10	<0.10	<0.10
Chlorine (Residual)	330.4(1)	mg/l	<0.050	<0.050	<0.050
Oil and Grease (413.1)	413.1(1)	mg/l	1.1	<1.0	<1.0
Total Suspended Solids @ 105°C	160.2(1)	mg/l	1	13	<1
Metals:					
Aluminum (Total)	6010(2)	mg/l	0.14	0.11	<0.10
Copper (Total)	6010(2)	mg/l	<0.010	<0.010	<0.010
Iron (Total)	6010(2)	mg/l	0.045	<0.030	<0.030
Lead (Total)	6010(2)	mg/l	<0.10	<0.10	<0.10
Zinc (Total)	6010(2)	mg/l	0.040	0.012	<0.0050

(1) U.S. Environmental Protection Agency, 1983, Methods for Chemical Analysis of Water and Wastes, EPA-600/4-79-020, Environmental Monitoring and Support Laboratory, Cincinnati, Ohio.
(2) U.S. Environmental Protection Agency, 1987, Test Methods for Evaluating Solid Waste, SW-846, 3rd ed., Office of Solid Waste and Emergency Response, Washington, DC.

Table 3
General Data Table
ICF Kaiser Engineers, Inc.
Antech Ltd. Project No. 94-1771
Water Characterization; 91001-002-33
LIFAC

Parameter	Analytical Method	Units	Sample Identification 9405-1535 3 (5/17/94)	9405-1536 4 (5/17/94)	9405-1537 5A (5/17/94)
Alkalinity (ASTM)	310.2(1)	mg/l $CaCO_3$	2430	2220	2670
pH	9045(2)	pH units	12.70	12.72	12.69
Sulfate (ASTM)	9038(2)	mg/l	1700	1600	1800
Percent Carbon		%	4.43%	3.56%	2.90%
Metal:					
Arsenic (Total)	7060(2)	mg/kg	23	29	41
TCLP(3) Metals:					
Silver (TCLP)	6010(2)	mg/l	<0.10	<0.10	<0.10
Arsenic (TCLP)	6010(2)	mg/l	<0.10	<0.10	<0.10
Barium (TCLP)	6010(2)	mg/l	<10	<10	<10
Cadmium (TCLP)	6010(2)	mg/l	<0.10	<0.10	<0.10
Chromium (TCLP)	6010(2)	mg/l	<0.10	<0.10	<0.10
Mercury (TCLP)	7470(2)	mg/l	<0.010	<0.010	<0.010
Lead (TCLP)	6010(2)	mg/l	<0.10	<0.10	<0.10
Selenium (TCLP)	7740(2)	mg/l	<0.10	<0.10	<0.10
TCLP Extraction Fluid Data:					
Extraction Fluid	1311(2)	-	No.2	No.2	No.2
pH with Deionized Water		pH units	12.06	11.99	12.21
pH After Addition of 1 Normal HCL		pH units	11.84	11.77	11.95
pH of TCLP Extract		pH units	12.16	11.94	12.15
Amount of Sample Extracted		g	100	100	100

See footnotes at end of table.

Table 3
(Continued)

Parameter	Analytical Method	Units	Sample Identification: 9405-1538 5B (5/17/94)	9405-1539 6B (5/17/94)	9405-1541 Method Blank (5/18/94)
Alkalinity (ASTM)	310.2(1)	mg/l $CaCO_3$	2740	448	3.00
pH	9045(2)	pH units	12.70	12.70	NAP(4)
Sulfate (ASTM)	9038(2)	mg/l	1700	570	<1.0
Percent Carbon		%	2.89%	1.89%	———
Metal:					
Arsenic (Total)	7060(2)	mg/kg	52	8.4	<0.20
TCLP(3) Metals:					
Silver (TCLP)	6010(2)	mg/l	<0.10	<0.10	<0.10
Arsenic (TCLP)	6010(2)	mg/l	<0.10	<0.10	<0.10
Barium (TCLP)	6010(2)	mg/l	<10	<10	<10
Cadmium (TCLP)	6010(2)	mg/l	<0.10	<0.10	<0.10
Chromium (TCLP)	6010(2)	mg/l	<0.10	<0.10	<0.10
Mercury (TCLP)	7470(2)	mg/l	<0.010	<0.010	<0.010
Lead (TCLP)	6010(2)	mg/l	<0.10	<0.10	<0.10
Selenium (TCLP)	7740(2)	mg/l	<0.10	<0.10	<0.10
TCLP Extraction Fluid Data:					
Extraction Fluid	1311(2)	-	No.2	No.1	No.2
pH with Deionized Water		pH units	12.11	11.26	NAP
pH After Addition of 1 Normal HCL		pH units	11.90	2.08	NAP
pH of TCLP Extract		pH units	12.13	6.89	2.93
Amount of Sample Extracted		g	100	100	NAP

(1)U.S. Environmental Protection Agency, 1983, Methods for Chemical Analysis of Water and Wastes, EPA-600/4-79-020, Environmental Monitoring and Support Laboratory, Cincinnati, Ohio.
(2)U.S. Environmental Protection Agency, 1987, Test Methods for Evaluating Solid Waste, SW-846, 3rd ed., Office of

Table 3
(Continued)

Solid Waste and Emergency Response, Washington, DC.
(3)TCLP = Toxicity Characteristic Leaching Procedure.
(4)NAP = Not applicable.

Table 4
TCLP[1] Organic Analyses
ICF Kaiser Engineers, Inc.
Antech Ltd. Project No. 94-1771
Water Characterization; 91001-002-33
LIFAC

Parameter	CAS[2] Number	Units	Sample Identification 9405-1535 3 (5/17/94)	9405-1536 4 (5/17/94)
TCLP Volatile Organic Analyses:(8260)[3]				
Benzene	71-43-2	µg/l	<50	<50
2-Butanone	78-93-3	µg/l	<5000	<5000
Carbon tetrachloride	56-23-5	µg/l	<50	<50
Chlorobenzene	108-90-7	µg/l	<1000	<1000
Chloroform	67-66-3	µg/l	<500	<500
1,2-Dichloroethane	107-06-2	µg/l	<50	<50
1,1-Dichloroethene	75-35-4	µg/l	<50	<50
Tetrachloroethene	127-18-4	µg/l	<50	<50
Trichloroethene	79-01-6	µg/l	<50	<50
Vinyl chloride	75-01-4	µg/l	<50	<50
TCLP Base Neutral Extractables:(8270)[3]				
1,4-Dichlorobenzene	106-46-7	µg/l	<500	<500
2,4-Dinitrotoluene	121-14-2	µg/l	<50	<50
Hexachlorobutadiene	87-68-3	µg/l	<50	<50
Hexachlorobenzene	118-74-1	µg/l	<100	<100
Hexachloroethane	67-72-1	µg/l	<500	<500
Nitrobenzene	98-95-3	µg/l	<100	<100
Pyridine	110-86-1	µg/l	<500	<500
TCLP Acid Extractables:(8270)[3]				
Total Cresol (TCLP)	(4)	µg/l	<5000	<5000
Pentachlorophenol	87-86-5	µg/l	<5000	<5000
2,4,5-Trichlorophenol	95-95-4	µg/l	<5000	<5000
2,4,6-Trichlorophenol	88-06-2	µg/l	<100	<100

See footnotes at end of table.

Table 4
(Continued)

Parameter	CAS(2) Number	Units	Sample Identification 9405-1537 5A (5/17/94)	9405-1538 5B (5/17/94)
TCLP Volatile Organic Analyses:(8260)(3)				
Benzene	71-43-2	µg/l	<50	<50
2-Butanone	78-93-3	µg/l	<5000	<5000
Carbon tetrachloride	56-23-5	µg/l	<50	<50
Chlorobenzene	108-90-7	µg/l	<1000	<1000
Chloroform	67-66-3	µg/l	<500	<500
1,2-Dichloroethane	107-06-2	µg/l	<50	<50
1,1-Dichloroethene	75-35-4	µg/l	<50	<50
Tetrachloroethene	127-18-4	µg/l	<50	<50
Trichloroethene	79-01-6	µg/l	<50	<50
Vinyl chloride	75-01-4	µg/l	<50	<50
TCLP Base Neutral Extractables:(8270)(3)				
1,4-Dichlorobenzene	106-46-7	µg/l	<500	<500
2,4-Dinitrotoluene	121-14-2	µg/l	<50	<50
Hexachlorobutadiene	87-68-3	µg/l	<50	<50
Hexachlorobenzene	118-74-1	µg/l	<100	<100
Hexachloroethane	67-72-1	µg/l	<500	<500
Nitrobenzene	98-95-3	µg/l	<100	<100
Pyridine	110-86-1	µg/l	<500	<500
TCLP Acid Extractables:(8270)(3)				
Total Cresol (TCLP)	(4)	µg/l	<5000	<5000
Pentachlorophenol	87-86-5	µg/l	<5000	<5000
2,4,5-Trichlorophenol	95-95-4	µg/l	<5000	<5000
2,4,6-Trichlorophenol	88-06-2	µg/l	<100	<100

See footnotes at end of table.

Table 4
(Continued)

Parameter	CAS[2] Number	Units	Sample Identification 9405-1539 6B (5/17/94)	Sample Identification 9405-1541 Method Blank (5/18/94)
TCLP Volatile Organic Analyses:(8260)[3]				
Benzene	71-43-2	µg/l	<50	<50
2-Butanone	78-93-3	µg/l	<5000	<5000
Carbon tetrachloride	56-23-5	µg/l	<50	<50
Chlorobenzene	108-90-7	µg/l	<1000	<1000
Chloroform	67-66-3	µg/l	<500	<500
1,2-Dichloroethane	107-06-2	µg/l	<50	<50
1,1-Dichloroethene	75-35-4	µg/l	<50	<50
Tetrachloroethene	127-18-4	µg/l	<50	<50
Trichloroethene	79-01-6	µg/l	<50	<50
Vinyl chloride	75-01-4	µg/l	<50	<50
TCLP Base Neutral Extractables:(8270)[3]				
1,4-Dichlorobenzene	106-46-7	µg/l	<500	<500
2,4-Dinitrotoluene	121-14-2	µg/l	<50	<50
Hexachlorobutadiene	87-68-3	µg/l	<50	<50
Hexachlorobenzene	118-74-1	µg/l	<100	<100
Hexachloroethane	67-72-1	µg/l	<500	<500
Nitrobenzene	98-95-3	µg/l	<100	<100
Pyridine	110-86-1	µg/l	<500	<500
TCLP Acid Extractables:(8270)[3]				
Total Cresol (TCLP)	(4)	µg/l	<5000	<5000
Pentachlorophenol	87-86-5	µg/l	<5000	<5000
2,4,5-Trichlorophenol	95-95-4	µg/l	<5000	<5000
2,4,6-Trichlorophenol	88-06-2	µg/l	<100	<100

(1) TCLP = Toxicity Characteristic Leaching Procedure.
(2) CAS = Chemical Abstracts Services.
(3) U.S. Environmental Protection Agency, 1987, Test Methods for Evaluating Solid Waste, SW-846, 3rd ed., Office of Solid Waste and Emergency Response, Washington, DC.
(4) m-Cresol 108-39-4, o-Cresol 95-48-7, and p-Cresol 106-44-5.

Table 5
Volatile Organic Analyses
Target Compound List/EPA Method 8260(1)
ICF Kaiser Engineers, Inc.
Antech Ltd. Project No. 94-1771
Water Characterization; 91001-002-33
LIFAC

Parameter	CAS(2) Number	Units	Sample Identification 9405-1535 3 (5/17/94)	9405-1536 4 (5/17/94)
Acetone	67-64-1	µg/kg	<500	<500
Benzene	71-43-2	µg/kg	<25	<25
Bromodichloromethane	75-27-4	µg/kg	<25	<25
Bromoform	75-25-2	µg/kg	<25	<25
Bromomethane	74-83-9	µg/kg	<50	<50
2-Butanone (MEK)	78-93-3	µg/kg	<50	<50
Carbon disulfide	75-15-0	µg/kg	<25	<25
Carbon tetrachloride	56-23-5	µg/kg	<25	<25
Chlorobenzene	108-90-7	µg/kg	<25	<25
Chlorodibromomethane	124-48-1	µg/kg	<25	<25
Chloroethane	75-00-3	µg/kg	<50	<50
Chloromethane	74-87-3	µg/kg	<50	<50
Chloroform	67-66-3	µg/kg	<25	<25
1,1-Dichloroethane	75-34-3	µg/kg	<25	<25
1,2-Dichloroethane	107-06-2	µg/kg	<25	<25
1,1-Dichloroethene	75-35-4	µg/kg	<25	<25
cis-1,2-Dichloroethene	156-59-2	µg/kg	<25	<25
trans-1,2-Dichloroethene	156-60-5	µg/kg	<25	<25
1,2-Dichloropropane	78-87-5	µg/kg	<25	<25
cis-1,3-Dichloropropene	10061-01-5	µg/kg	<25	<25
trans-1,3-Dichloropropene	10061-02-6	µg/kg	<25	<25
Ethylbenzene	100-41-4	µg/kg	<25	<25
2-Hexanone	591-78-6	µg/kg	<250	<250
Methylene chloride	75-09-2	µg/kg	<25	<25
4-Methyl-2-pentanone (MIBK)	108-10-1	µg/kg	<250	<250
Styrene	100-42-5	µg/kg	<25	<25
1,1,2,2-Tetrachloroethane	79-34-5	µg/kg	<25	<25
Tetrachloroethene	127-18-4	µg/kg	<25	<25
Toluene	108-88-3	µg/kg	<25	<25
1,1,1-Trichloroethane	71-55-6	µg/kg	<25	<25
1,1,2-Trichloroethane	79-00-5	µg/kg	<25	<25
Trichloroethene	79-01-6	µg/kg	<25	<25
Vinyl chloride	75-01-4	µg/kg	<50	<50
Xylenes (Total)	1330-20-7	µg/kg	<25	<25

See footnotes at end of table.

Table 5
(Continued)

Parameter	CAS(2) Number	Units	Sample Identification 9405-1537 5A (5/17/94)	Sample Identification 9405-1538 5B (5/17/94)
Acetone	67-64-1	µg/kg	<500	<100
Benzene	71-43-2	µg/kg	<25	<54
Bromodichloromethane	75-27-4	µg/kg	<25	<5.0
Bromoform	75-25-2	µg/kg	<25	<5.0
Bromomethane	74-83-9	µg/kg	<50	<10
2-Butanone (MEK)	78-93-3	µg/kg	<50	<10
Carbon disulfide	75-15-0	µg/kg	<25	<5.0
Carbon tetrachloride	56-23-5	µg/kg	<25	<5.0
Chlorobenzene	108-90-7	µg/kg	<25	<5.0
Chlorodibromomethane	124-48-1	µg/kg	<25	<5.0
Chloroethane	75-00-3	µg/kg	<50	<10
Chloromethane	74-87-3	µg/kg	<50	<10
Chloroform	67-66-3	µg/kg	<25	<5.0
1,1-Dichloroethane	75-34-3	µg/kg	<25	<5.0
1,2-Dichloroethane	107-06-2	µg/kg	<25	<5.0
1,1-Dichloroethene	75-35-4	µg/kg	<25	<5.0
cis-1,2-Dichloroethene	156-59-2	µg/kg	<25	<5.0
trans-1,2-Dichloroethene	156-60-5	µg/kg	<25	<5.0
1,2-Dichloropropane	78-87-5	µg/kg	<25	<5.0
cis-1,3-Dichloropropene	10061-01-5	µg/kg	<25	<5.0
trans-1,3-Dichloropropene	10061-02-6	µg/kg	<25	<5.0
Ethylbenzene	100-41-4	µg/kg	<25	<5.0
2-Hexanone	591-78-6	µg/kg	<250	<50
Methylene chloride	75-09-2	µg/kg	<25	<5.0
4-Methyl-2-pentanone (MIBK)	108-10-1	µg/kg	<250	<50
Styrene	100-42-5	µg/kg	<25	<5.0
1,1,2,2-Tetrachloroethane	79-34-5	µg/kg	<25	<5.0
Tetrachloroethene	127-18-4	µg/kg	<25	<5.0
Toluene	108-88-3	µg/kg	<25	5.0
1,1,1-Trichloroethane	71-55-6	µg/kg	<25	<5.0
1,1,2-Trichloroethane	79-00-5	µg/kg	<25	<5.0
Trichloroethene	79-01-6	µg/kg	<25	<5.0
Vinyl chloride	75-01-4	µg/kg	<50	<10
Xylenes (Total)	1330-20-7	µg/kg	<25	<5.0

See footnotes at end of table.

Table 5
(Continued)

Parameter	CAS[2] Number	Units	Sample Identification 9405-1539 6B (5/17/94)	9405-1541 Method Blank (5/18/94)
Acetone	67-64-1	µg/kg	<500	<100
Benzene	71-43-2	µg/kg	<25	<5.0
Bromodichloromethane	75-27-4	µg/kg	<25	<5.0
Bromoform	75-25-2	µg/kg	<25	<5.0
Bromomethane	74-83-9	µg/kg	<50	<10
2-Butanone (MEK)	78-93-3	µg/kg	<50	<10
Carbon disulfide	75-15-0	µg/kg	<25	<5.0
Carbon tetrachloride	56-23-5	µg/kg	<25	<5.0
Chlorobenzene	108-90-7	µg/kg	<25	<5.0
Chlorodibromomethane	124-48-1	µg/kg	<25	<5.0
Chloroethane	75-00-3	µg/kg	<50	<10
Chloromethane	74-87-3	µg/kg	<50	<10
Chloroform	67-66-3	µg/kg	<25	<5.0
1,1-Dichloroethane	75-34-3	µg/kg	<25	<5.0
1,2-Dichloroethane	107-06-2	µg/kg	<25	<5.0
1,1-Dichloroethene	75-35-4	µg/kg	<25	<5.0
cis-1,2-Dichloroethene	156-59-2	µg/kg	<25	<5.0
trans-1,2-Dichloroethene	156-60-5	µg/kg	<25	<5.0
1,2-Dichloropropane	78-87-5	µg/kg	<25	<5.0
cis-1,3-Dichloropropene	10061-01-5	µg/kg	<25	<5.0
trans-1,3-Dichloropropene	10061-02-6	µg/kg	<25	<5.0
Ethylbenzene	100-41-4	µg/kg	<25	<5.0
2-Hexanone	591-78-6	µg/kg	<250	<50
Methylene chloride	75-09-2	µg/kg	<25	<5.0
4-Methyl-2-pentanone (MIBK)	108-10-1	µg/kg	<250	<50
Styrene	100-42-5	µg/kg	<25	<5.0
1,1,2,2-Tetrachloroethane	79-34-5	µg/kg	<25	<5.0
Tetrachloroethene	127-18-4	µg/kg	<25	<5.0
Toluene	108-88-3	µg/kg	<25	<5.0
1,1,1-Trichloroethane	71-55-6	µg/kg	<25	<5.0
1,1,2-Trichloroethane	79-00-5	µg/kg	<25	<5.0
Trichloroethene	79-01-6	µg/kg	<25	<5.0
Vinyl chloride	75-01-4	µg/kg	<50	<10
Xylenes (Total)	1330-20-7	µg/kg	<25	<5.0

(1) U.S. Environmental Protection Agency, 1987, Test Methods for Evaluating Solid Waste, SW-846, 3rd ed., Office of Solid Waste and Emergency Response, Washington, DC.
(2) CAS = Chemical Abstracts Services.

Toxicity Characteristic Leaching Procedure (TCLP)
Regulatory Levels

Contaminant	Regulatory Level (mg/l)	USEPA Hazardous Waste Number
Arsenic	5.0	D004
Barium	100.0	D005
Cadmium	1.0	D006
Chromium	5.0	D007
Lead	5.0	D008
Mercury	0.2	D009
Selenium	1.0	D010
Silver	5.0	D011
Endrin	0.02	D012
Lindane	0.4	D013
Methoxychlor	10.0	D014
Toxaphene	0.5	D015
2,4-D	10.0	D016
2,4,5-TP (silvex)	1.0	D017
Benzene	0.5	D018
Carbon Tetrachloride	0.5	D019
Chlordane	0.03	D020
Chlorobenzene	100.0	D021
Chloroform	6.0	D022
o-Cresol	200.0	D023
m-Cresol	200.0	D024
p-Cresol	200.0	D025
Cresol	200.0	D026
1,4-Dichlorobenzene	7.5	D027
1,2-Dichloroethane	0.5	D028
1,1-Dichloroethene	0.7	D029
2,4-Dinitrotoluene	0.13	D030
Heptachlor (and its epoxide)	0.008	D031
Hexachlorobenzene	0.13	D032
Hexachlorobutadiene	0.5	D033
Hexachloroethane	3.0	D034
2-Butanone	200.0	D035
Nitrobenzene	2.0	D036
Pentachlorophenol	100.0	D037
Pyridine	5.0	D038
Tetrachloroethene	0.7	D039
Trichloroethene	0.5	D040
2,4,5-Trichlorophenol	400.0	D041
2,4,6-Trichlorophenol	2.0	D042
Vinyl Chloride	0.2	D043

Antech Ltd.

One Triangle Drive • Export, Pennsylvania 15632 • Phone: (412) 733-1161 • Fax: (412) 327-7793

August 26, 1994

rec'd 8-30-94

Ms. Kathleen D. Conner
ICF Kaiser Engineers, Inc.
Four Gateway Center
Pittsburgh, PA 15222-1207

Waste Characterization; 91001-002-33
LIFAC
Antech Ltd. Project No. 94-3117

Dear Ms. Conner:

Enclosed are analytical results for samples submitted by CNG Transmission Corporation. Samples were received on August 18, 1994 and logged in for analysis on August 19, 1994.

Appropriate U.S. Environmental Protection Agency methods were used and are indicated accordingly on the data tables. Appropriate quality assurance/quality control analyses were performed in accordance with Antech Ltd.'s Statement of Qualifications. If you have any questions, please call me.

Sincerely,

Randal T. Hill

Randal T. Hill
Organic Chemistry Manager

RTH:ljk

Enclosures

ANTECH LTD.
CASE NARRATIVE

I. GENERAL:

A: PROJECT NUMBERS:

ANTECH LTD.: 94-3117
CLIENT: 91001-002-33

B: SAMPLE IDENTIFICATIONS:

ANTECH LTD.: 9408-1869 through 9408-1872
CLIENT: 3 Economizer Ash, 5A ESP Ash (7&8), 5B ESP Ash (5&6), and 6B Bottom Ash

C: SHIPPING/RECEIVING COMMENTS:

None

II. PREPARATION/ANALYSIS COMMENTS:

A: PREPARATION:

None

B: GENERAL CHEMISTRY:

None

C: METALS:

None

D: ORGANICS:

1. VOLATILES:

None

2. SEMIVOLATILES:

None

III. GENERAL COMMENTS:

Trailing zeroes and decimal places appearing on the data should not be interpreted as precision of the analytical procedure, but rather as a result of reporting format. Please refer to the enclosed TCLP Regulatory Levels table for appropriate regulatory levels and hazardous waste numbers.

Table 1
General Data Table
ICF Kaiser Engineers, Inc.
Antech Ltd. Project No. 94-3117
Waste Characterization; 91001-002-33
LIFAC

Parameter	Analytical Method	Units	Sample Identification				
			9408-1869 3 Economizer Ash (8/16/94)	9408-1870 5A ESP Ash (7&8) (8/16/94)	9408-1871 5B ESP Ash (5&6) (8/16/94)	9408-1872 6B Bottom Ash (8/16/94)	9408-1873 Method Blank (8/18/94)
pH	9045(1)	pH units	12.78	11.83	8.21	7.96	NAP(2)
Percent Carbon		%	4.74%	4.49%	6.00%	46%	<0.010
ASTM							
Alkalinity (ASTM)	310.2(3)	mg/l $CaCO_3$	858	370	42.0	7.00	<2.00
Sulfate (ASTM)	9038(1)	mg/l	310	320	720	16	<1.0
Total Metal:							
Arsenic (Total)	7060(1)	mg/kg	34	9.8	21	0.56	<0.20
TCLP(4) Metals:							
Silver (TCLP)	6010(1)	mg/l	<0.10	<0.10	<0.10	<0.10	<0.10
Arsenic (TCLP)	6010(1)	mg/l	<0.10	<0.10	0.29	<0.10	<0.10
Barium (TCLP)	6010(1)	mg/l	<10	<10	<10	<10	<10
Cadmium (TCLP)	6010(1)	mg/l	<0.10	0.13	0.21	<0.10	<0.10
Chromium (TCLP)	6010(1)	mg/l	<0.10	<0.10	0.27	<0.10	<0.10
Mercury (TCLP)	7470(1)	mg/l	<0.010	<0.010	<0.010	<0.010	<0.010
Lead (TCLP)	6010(1)	mg/l	<0.10	<0.10	<0.10	<0.10	<0.10
Selenium (TCLP)	7740(1)	mg/l	<0.10	<0.10	<0.10	<0.10	<0.10
TCLP Extraction Fluid Data:							
Extraction Fluid	1311(1)	-	No.1	No.1	No.1	No.1	No.1
pH with Deionized Water		pH units	11.04	10.88	8.91	8.46	NAP
pH After Addition of 1 Normal HCL		pH units	2.54	2.07	1.77	1.38	NAP
pH of TCLP Extract		pH units	6.03	5.33	4.99	4.92	4.93
Amount of Sample Extracted		g	80.0	60.0	60.0	80.0	NAP

(1) U.S. Environmental Protection Agency, 1987, Test Methods for Evaluating Solid Waste, SW-846, 3rd ed., Office of Solid Waste and Emergency Response, Washington, DC.
(2) NAP = Not applicable.
(3) U.S. Environmental Protection Agency, 1983, Methods for Chemical Analysis of Water and Wastes, EPA-600/4-79-020, Environmental Monitoring and Support Laboratory, Cincinnati, Ohio.
(4) TCLP = Toxicity Characteristic Leaching Procedure.

Table 1
(Continued)

Cincinnati, Ohio.

(5) TCLP = Toxicity Characteristic Leaching Procedure.

Table 2
TCLP[1] Organic Analyses
EPA Method 8270[2]
ICF Kaiser Engineers, Inc.
Antech Ltd. Project No. 94-3117
Waste Characterization; 91001-002-33
LIFAC

Parameter	CAS[3] Number	Units	Sample Identification				
			9408-1869 3 Economizer Ash (8/16/94)	9408-1870 5A ESP Ash (7&8) (8/16/94)	9408-1871 5B ESP Ash (5&6) (8/16/94)	9408-1872 6B Bottom Ash (8/16/94)	9408-1873 Method Blank (8/18/94)
TCLP Volatile Organic Analyses:(8260)[2]							
Benzene	71-43-2	µg/l	<50	<50	<50	<50	<50
2-Butanone	78-93-3	µg/l	<5000	<5000	<5000	<5000	<5000
Carbon tetrachloride	56-23-5	µg/l	<50	<50	<50	<50	<50
Chlorobenzene	108-90-7	µg/l	<1000	<1000	<1000	<1000	<1000
Chloroform	67-66-3	µg/l	<500	<500	<500	<500	<500
1,2-Dichloroethane	107-06-2	µg/l	<50	<50	<50	<50	<50
1,1-Dichloroethene	75-35-4	µg/l	<50	<50	<50	<50	<50
Tetrachloroethene	127-18-4	µg/l	<50	<50	<50	<50	<50
Trichloroethene	79-01-6	µg/l	<50	<50	<50	<50	<50
Vinyl chloride	75-01-4	µg/l	<50	<50	<50	<50	<50
Xylenes (Total)	1330-20-7	µg/kg	<25	<25	<5.0	<5.0	<5.0
TCLP Base/Neutral Extractables:(8270)[2]							
1,4-Dichlorobenzene	106-46-7	µg/l	<500	<500	<500	<500	<500
2,4-Dinitrotoluene	121-14-2	µg/l	<50	<50	<50	<50	<50
Hexachlorobutadiene	87-68-3	µg/l	<50	<50	<50	<50	<50
Hexachlorobenzene	118-74-1	µg/l	<100	<100	<100	<100	<100
Hexachloroethane	67-72-1	µg/l	<500	<500	<500	<500	<500
Nitrobenzene	98-95-3	µg/l	<100	<100	<100	<100	<100
Pyridine	110-86-1	µg/l	<500	<500	<500	<500	<500
TCLP Acid Extractables:(8270)[2]							
Total Cresol (TCLP)	(4)	µg/l	<5000	<5000	<5000	<5000	<5000
Pentachlorophenol	87-86-5	µg/l	<5000	<5000	<5000	<5000	<5000
2,4,5-Trichlorophenol	95-95-4	µg/l	<5000	<5000	<5000	<5000	<5000
2,4,6-Trichlorophenol	88-06-2	µg/l	<100	<100	<100	<100	<100

(1)TCLP = Toxicity Characteristic Leaching Procedure.
(2)U.S. Environmental Protection Agency, 1987, Test Methods for Evaluating Solid Waste, SW-846, 3rd ed., Office of Solid Waste and Emergency Response, Washington, DC.
(3)CAS = Chemical Abstracts Services.
(4)m-Cresol 108-39-4, o-Cresol 95-48-7, and p-Cresol 106-44-5.

Table 3
Volatile Organic Analyses
Target Compound List/EPA Method 8260[1]
ICF Kaiser Engineers, Inc.
Antech Ltd. Project No. 94-3117
Waste Characterization; 91001-002-33
LIFAC

Parameter	CAS[2] Number	Units	Sample Identification				
			9408-1869 3 Economizer Ash (8/16/94)	9408-1870 5A ESP Ash (7&8) (8/16/94)	9408-1871 5B ESP Ash (5&6) (8/16/94)	9408-1872 6B Bottom Ash (8/16/94)	9408-1873 Method Blank (8/18/94)
Acetone	67-64-1	µg/kg	<500	<500	<100	<100	<100
Benzene	71-43-2	µg/kg	<25	<25	<5.0	<5.0	<5.0
Bromodichloromethane	75-27-4	µg/kg	<25	<25	<5.0	<5.0	<5.0
Bromoform	75-25-2	µg/kg	<25	<25	<5.0	<5.0	<5.0
Bromomethane	74-83-9	µg/kg	<50	<50	<10	<10	<10
2-Butanone (MEK)	78-93-3	µg/kg	<50	<50	<10	<10	<10
Carbon disulfide	75-15-0	µg/kg	<25	<25	<5.0	<5.0	<5.0
Carbon tetrachloride	56-23-5	µg/kg	<25	<25	<5.0	<5.0	<5.0
Chlorobenzene	108-90-7	µg/kg	<25	<25	<5.0	<5.0	<5.0
Chlorodibromomethane	124-48-1	µg/kg	<25	<25	<5.0	<5.0	<5.0
Chloroethane	75-00-3	µg/kg	<50	<50	<10	<10	<10
Chloromethane	74-87-3	µg/kg	<50	<50	<10	<10	<10
Chloroform	67-66-3	µg/kg	<25	<25	<5.0	<5.0	<5.0
1,1-Dichloroethane	75-34-3	µg/kg	<25	<25	<5.0	<5.0	<5.0
1,2-Dichloroethane	107-06-2	µg/kg	<25	<25	<5.0	<5.0	<5.0
1,1-Dichloroethene	75-35-4	µg/kg	<25	<25	<5.0	<5.0	<5.0
cis-1,2-Dichloroethene	156-59-2	µg/kg	<25	<25	<5.0	<5.0	<5.0
trans-1,2-Dichloroethene	156-60-5	µg/kg	<25	<25	<5.0	<5.0	<5.0
1,2-Dichloropropane	78-87-5	µg/kg	<25	<25	<5.0	<5.0	<5.0
cis-1,3-Dichloropropene	10061-01-5	µg/kg	<25	<25	<5.0	<5.0	<5.0
trans-1,3-Dichloropropene	10061-02-6	µg/kg	<25	<25	<5.0	<5.0	<5.0
Ethylbenzene	100-41-4	µg/kg	<25	<25	<5.0	<5.0	<5.0
2-Hexanone	591-78-6	µg/kg	<250	<250	<50	<50	<50
Methylene chloride	75-09-2	µg/kg	<25	<25	30	12	5.1
4-Methyl-2-pentanone (MIBK)	108-10-1	µg/kg	<250	<250	<50	<50	<50
Styrene	100-42-5	µg/kg	<25	<25	<5.0	<5.0	<5.0
1,1,2,2-Tetrachloroethane	79-34-5	µg/kg	<25	<25	<5.0	<5.0	<5.0
Tetrachloroethene	127-18-4	µg/kg	<25	<25	<5.0	<5.0	<5.0
Toluene	108-88-3	µg/kg	<25	<25	<5.0	<5.0	<5.0
1,1,1-Trichloroethane	71-55-6	µg/kg	<25	<25	<5.0	<5.0	<5.0
1,1,2-Trichloroethane	79-00-5	µg/kg	<25	<25	<5.0	<5.0	<5.0
Trichloroethene	79-01-6	µg/kg	<25	<25	<5.0	<5.0	<5.0
Vinyl chloride	75-01-4	µg/kg	<50	<50	<10	<10	<10
Xylenes (Total)	1330-20-7	µg/kg	<25	<25	<5.0	<5.0	<5.0

(1) U.S. Environmental Protection Agency, 1987, Test Methods for Evaluating Solid Waste, SW-846, 3rd ed., Office of Solid Waste and Emergency Response, Washington, DC.
(2) CAS = Chemical Abstracts Services.

Antech Ltd.

One Triangle Drive • Export, Pennsylvania 15632 • Phone: (412) 733-1161 • Fax: (412) 327-7793

August 26, 1994

rec'd 8-30-94

Ms. Kathleen D. Conner
ICF Kaiser Engineers, Inc.
Four Gateway Center
Pittsburgh, PA 15222-1207

Water Characterization: #91001-002-33
Antech Ltd. Project No. 94-3120

Dear Ms. Conner:

Enclosed are analytical results for samples submitted by ICF Kaiser Engineers, Inc. Samples were received on August 18, 1994 and logged in for analysis on August 19, 1994.

Appropriate U.S. Environmental Protection Agency methods were used and are indicated accordingly on the data table. Appropriate quality assurance/quality control analyses were performed in accordance with Antech Ltd.'s Statement of Qualifications. If you have any questions, please call me.

Sincerely,

Randal T. Hill
Organic Chemistry Manager

RTH:mav

Enclosures

ANTECH LTD.
CASE NARRATIVE

I. GENERAL:

A: PROJECT NUMBERS:

ANTECH LTD.: 94-3120
CLIENT: #91001-002-33

B: SAMPLE IDENTIFICATIONS:

ANTECH LTD.: 94-1882 and 9408-1883
CLIENT: Z Feedwater and 6A Bottom Ash

C: SHIPPING/RECEIVING COMMENTS:

A request for analysis was not received.

II. PREPARATION/ANALYSIS COMMENTS:

A: PREPARATION:

None

B: GENERAL CHEMISTRY:

None

C: METALS:

None

D: ORGANICS:

1. PCBS:
None

III. GENERAL COMMENTS:

Trailing zeroes and decimal places appearing on the data should not be interpreted as precision of the analytical procedure, but rather as a result of reporting format.

Table 1
General Data Table
ICF Kaiser Engineers, Inc.
Antech Ltd. Project No. 94-3120
Water Characterization; #91001-002-33 Water Characterization

Parameter	Analytical Method	Units	Sample Identification		
			9408-1882 Z Feedwater (8/16/94)	9408-1883 6A Bottom Ash (8/16/94)	9408-1884 Method Blank (8/18/94)
Alkalinity (Total)	310.2(1)	mg/l $CaCO_3$	209	186	<2.00
Chlorine (Residual)	330.4(1)	mg/l	<0.050	<0.050	<0.050
Ammonia	350.1(1)	mg/l NH_3-N	<0.10	<0.10	<0.10
Oil and Grease	413.1(1)	mg/l	<1.0	<1.0	<1.0
Total Suspended Solids @ 105°C	160.2(1)	mg/l	3	31	<1
Polychlorinated Biphenyls	8080(2)	µg/l	<1.0	<1.0	<1.0
Metals:					
Aluminum (Total)	6010(2)	mg/l	<0.10	0.34	<0.10
Copper (Total)	6010(2)	mg/l	<0.010	0.012	<0.010
Iron (Total)	6010(2)	mg/l	0.051	0.33	<0.030
Lead (Total)	6010(2)	mg/l	<0.10	<0.10	<0.10
Zinc (Total)	6010(2)	mg/l	0.041	0.046	<0.0050

(1) U.S. Environmental Protection Agency, 1983, Methods for Chemical Analysis of Water and Wastes, EPA-600/4-79-020, Environmental Monitoring and Support Laboratory, Cincinnati, Ohio.
(2) U.S. Environmental Protection Agency, 1987, Test Methods for Evaluating Solid Waste, SW-846, 3rd ed., Office of Solid Waste and Emergency Response, Washington, DC.

APPENDIX C

PRODUCTION INFORMATION - OPERATIONS TESTS

LIFAC NA DEMONSTRATION PROJECT
RICHMOND POWER AND LIGHT
WHITEWATER VALLEY GENERATING UNIT #2

OPERATIONS AND POST-LIFAC TESTS
ENVIRONMENTAL MONITORING REPORT

ICF KAISER ENGINEERS, INC.
PITTSBURGH, PENNSYLVANIA

- ..tac Stack Test 5/17/94

Test #1

	Time	gen #	#21	coal scales #22	#23
STOP	1126	05757	363248	418449	138720
START	1002	04941	363165	418368	138629
		81.6	83	81	91

Coal RATE .938

TEST #2

	GEN	#21	#22	#23
STOP 1332	06933	363364	418565	138848
START 1217	06236	363296	418498	138774
	69.7	68	67	74

Coal Rate .900

TEST #3

	GEN	#21	#22	#23
STOP 1525	08016	363474	418673	13896
START 1412	07327	363405	418605	13889
	688	069	68	7

Coal Rate = .924

ATTACHMENT
SWITCHBOARD LOG

TUESDAY MAY 1994

RICHMOND POWER ANI

WHITEWATER VALLEY STATIC

SWITCHBOARD LOG

GENERATOR No. 2											INDIANA & MICHIGAN EL. CO. (to R.P.&L.)						
Temp		Amps			MW	MVAR (-) In	KV	Field Amps	MWH Meter		IMP GEN	MW (-) Out					
	P	1	2	3					Reads	MWH			Reads X.1	MWH	Reserve	Short Term	Emer.
									99206				11750			10	
9		2300	2200	2300	58	-15	146	530	99730	574		7	11826	7.6			
9		2300	2200	2300	58	-15	146	525	00352	572		5	11892	6.6			
9		2300	2200	2300	58	-15	146	520	00925	573		6	11955	6.3			
9		2300	2200	2300	58	-15	146	525	01498	573		7	12022	6.7			
9		2300	2200	2300	58	0	146	540	02071	573		7	12089	6.6			
9		2300	2200	2300	58	-10	146	435	02644	573		6	12137	4.9			
		[illegible]	[illegible]	[illegible]	[illegible]	[illegible]	[illegible]	[illegible]	[illegible]	573		6	[illegible]	[illegible]			
		[illegible]	[illegible]	[illegible]	[illegible]	[illegible]	[illegible]	[illegible]	[illegible]	[illegible]		[illegible]	[illegible]	17.9			
		[illegible]	[illegible]	[illegible]	[illegible]	[illegible]	[illegible]	[illegible]	[illegible]	570		8	[illegible]	[illegible]		0	
		[illegible]	[illegible]	[illegible]	[illegible]			[illegible]	[illegible]	56.6		[illegible]	[illegible]	24.0		0	
		[illegible]	[illegible]	[illegible]	[illegible]	[illegible]	[illegible]	[illegible]	05500	570		[illegible]	[illegible]			0	
		[illegible]	[illegible]	2290	[illegible]	[illegible]	[illegible]	[illegible]	[illegible]	[illegible]		[illegible]	[illegible]	[illegible]			
		[illegible]	[illegible]	[illegible]				[illegible]	06052	56.0		[illegible]	[illegible]	[illegible]			
		2300	2200	[illegible]	[illegible]			[illegible]	[illegible]	56.0		18	30[illegible]	21.6		0	
		2280	2180	2280	58	-10	147	530	07771	56.7		10	13870	18.0		0	
		2280	2180	2280	58	0	147	530	08541	57.0		14	14044	16.0		0	
		2280	2180	2280	58	-10	147	530	09309	56.8		11	14182	13.8		0	
		2280	2180	2280	58	0	147	530	10077	56.8		8	14296	11.4		0	
		2280	2180	2280	58	-10	147	530	10846	56.7		9	14390	9.3		0	
		2280	2180	2280	58	0	147	530	10618	57.3		11	14490	10.4		0	
		2280	2180	2280	58	0	146	540	11389	57.0		12	14626	14.3		0	
		2280	2180	2280	58	-10	146	535	11957	56.8		7	14737	10.1			
9		2290	2200	2290	58	0	146	540	12533	[illegible]		7	14817	[illegible]			
9		2300	2200	2300	58	-10	146	530	12902	57[illegible]		4	14882	9.1			
									1369.2	1369.0			3148	3148	21	24	

Indicated	Maximum Indicated		Maximum		24 Hour	System Maximum		Time	12M	6AM	12N	6PM	MAX.
Time	MW	Time	MWH	Hour	Gross MWH Delivered	Net MWH	Time	Weather	Heavy	Clear	[illegible]	[illegible]	
								Temp.	49	42		59	60
									0	0	0	0	
[illegible]	305	0554	[illegible]	1100	2024.[illegible]	2276	1100						
519	350	1035	[illegible]	1100	314.8	234	1000						
257	47	1035	12	1100	2339.4	10616	1100						

N'T SAY IT — WRITE IT"

ATTACHMENT -

SWITCHBOARD LOG CONTINUED

273	22.0	77-8	4339	37-8	77-2
25	26.6	20.61	348.2	20.61	257.07
1081	1060	[illegible]	1162.7	14398	6018.72

iS.		UNIT No. 2 AUX TRANS.					TOTAL HP		SYSTEM MWH		
.2		No. 1			No. 2						
Meter		MWH Meter			MWH Meter						
MWH	Amps	Reads	MWH	Amps	Reads	MWH	WW VS	IM PA	GROSS	TOTAL HOUSE POWER	NET
		39566			56-0						
44	815	396.5	49				671	0	8260	6.11	7619
43	805	396.64	49				628	[illegible]	8000	628	7372
43	810	397.2	48				613	[illegible]	7900	613	7287
44	810	397.60	48				[illegible]	[illegible]	7850	[illegible]	7240
47	815	398.09	49				627	[illegible]	8030	627	7403
46	795	398.56	47				629	[illegible]	8350	629	7721
53	795	[illegible]	4.8				[illegible]	[illegible]	[illegible]	605	[illegible]
54	785	[illegible]	[illegible]				[illegible]	[illegible]	10680	650	[illegible]
[illegible]	785	[illegible]	48				[illegible]		[illegible]	[illegible]	[illegible]
59	[illegible]	[illegible]	47				672	[illegible]	110.30	6.72	03.58
[illegible]	[illegible]	[illegible]	47				[illegible]		112.80	[illegible]	[illegible]
[illegible]	785	[illegible]	[illegible]				[illegible]		10[illegible]	650	[illegible]
54	[illegible]	[illegible]	47				668	0	110.90	6.68	104.22
52	[illegible]	402[illegible]	47				663	0	10.04	6.63	03.37
47	800	402.50	4.8				667	0	106.70	6.67	100.03
47	800	402.28	4.8				667	0	102.50	6.67	98.83
48	795	402.76	4.8				668	0	102.40	6.68	95.72
48	800	403.24	4.8				668	0	100.00	6.68	[illegible]
47	800	404.72	4.8				667	0	98.10	6.67	91.43
47	800	405.20	4.8				[illegible]	0	99.60	6.66	[illegible]
47	800	405.68	4.8				667	0	103.20	6.67	96.53
47	810	406.16	4.8				667	0	98.90	6.67	92.23
47	810	406.65	49				669	0	91.40	6.69	84.71
45	812	407.12	47				[illegible]	1	45.30	[illegible]	[illegible]
1173		1146	1146				[illegible]	[illegible]	2339.40	[illegible]	2182.52

INDUSTRIAL LINE

	Amps				
TIME	1	2	3	MW (-) In	MVAR (-) In
1	110	120	120	52	[illegible]
5	170	170	150	[illegible]	[illegible]
9	[illegible]	[illegible]	[illegible]	[illegible]	[illegible]
1					
5	[illegible]	[illegible]	170	[illegible]	[illegible]
9	[illegible]	610	190	604	[illegible]

BOSTON TWP. LINE

	Amps				
TIME	1	2	3	MW (-) In	MVAR (-) In
1	170	170	150	171	[illegible]
5	170	120	120	64	[illegible]
9		[illegible]			[illegible]
1					[illegible]
5	100	100	110	65	[illegible]
9	[illegible]	[illegible]	100	60	[illegible]

WHITEWATER LINE

	Amps				
TIME	1	2	3	MW (-) In	MVAR (-) In
1	230	240	230	[illegible]	[illegible]
5	[illegible]	230	230	[illegible]	[illegible]
9				[illegible]	
1					
5	280	250	280	33.6	[illegible]
9	[illegible]	[illegible]	[illegible]	[illegible]	[illegible]

TEST LINE

	Amps				
TIME	1	2	3	MW (-) In	MVAR (-) In
1	[illegible]	[illegible]	10[illegible]	[illegible]	[illegible]
5	[illegible]	[illegible]	[illegible]	[illegible]	[illegible]
9					
1					
5	[illegible]	[illegible]	110	[illegible]	[illegible]
9	[illegible]		[illegible]	[illegible]	[illegible]

ATTACHMENT
BOILER LOG

TUESDAY MAY 1994

T — WHITEWATER VALLEY STATION
TROL ROOM

#2 BOILER DRAFT											PULVERIZER									#2	
Windbox								ID Fan			NO. 21			NO. 22			NO. 23				
Disch	Air Htr Air Inlet	Left	Right	Furnace	Boiler Outlet	Economizer Outlet	Air Htr Gas Out	%	RPM	AMPS	Suction Press	Disch Press	Temp	Suction Press	Disch Press	Temp	Suction Press	Disch Press	Temp	First Stage Pressure	Absolute Pressure
[illegible]	50	25	24	60	9	26	74	174		54	[illegible]	94	170	16	106	170	17	98	170	800	[illegible]
54	49	24	23	55	9	28	74	179		54	[illegible]	94	170	16	106	170	17	101	170	790	[illegible]
4	49	24	24	55	10	27	72	173		53	15	96	170	15	106	170	17	98	170	800	[illegible]
55	50	24	23	60	8	27	73	177		54	[illegible]	95	170	16	106	170	17	101	170	800	
7	49	24	23	60	8	27	74	178		54	[illegible]	95	170	15	106	170	17	99	170	800	[illegible]
53	49	24	24	55	10	25	71	172		50	15	96	170	16	107	170	17	102	170	800	[illegible]
[illegible]	[illegible]	24	[illegible]	[illegible]	11	26	[illegible]	[illegible]		[illegible]	[illegible]	[illegible]	[illegible]	[illegible]	[illegible]	[illegible]		[illegible]	[illegible]	[illegible]	[illegible]
[illegible]	[illegible]	[illegible]	[illegible]	55	10	[illegible]	72	[illegible]		[illegible]	[illegible]	[illegible]	[illegible]	[illegible]	[illegible]	[illegible]	[illegible]	[illegible]	[illegible]	800	[illegible]
[illegible]	[illegible]	[illegible]	[illegible]	[illegible]	[illegible]	[illegible]	[illegible]	[illegible]		[illegible]	[illegible]	[illegible]	[illegible]	[illegible]	[illegible]	[illegible]	[illegible]	[illegible]	[illegible]	[illegible]	[illegible]
[illegible]	[illegible]	[illegible]	[illegible]	60	11	26	73	176		[illegible]	[illegible]	[illegible]	170	16	105	170	17	10[illegible]	[illegible]	[illegible]	[illegible]
[illegible]	[illegible]	[illegible]	[illegible]	60	[illegible]	26	73	[illegible]		[illegible]	[illegible]	[illegible]	[illegible]	[illegible]	[illegible]	[illegible]	[illegible]	[illegible]	[illegible]	[illegible]	[illegible]
[illegible]	50	[illegible]	[illegible]	60	[illegible]	26	74	[illegible]		[illegible]	[illegible]	[illegible]	[illegible]	[illegible]	[illegible]	[illegible]	[illegible]	[illegible]	[illegible]	[illegible]	[illegible]
[illegible]	50	[illegible]	[illegible]	60	[illegible]	27	74	177		[illegible]	[illegible]	[illegible]	[illegible]	16	[illegible]	[illegible]	[illegible]	[illegible]	[illegible]	[illegible]	[illegible]
[illegible]	50	[illegible]	[illegible]	60	[illegible]	28	[illegible]	200		[illegible]	[illegible]	[illegible]	[illegible]	[illegible]	[illegible]	[illegible]	[illegible]	102	[illegible]	[illegible]	
[illegible]	[illegible]	[illegible]	[illegible]	[illegible]	10	2.0	70	172	[illegible]	[illegible]	[illegible]	[illegible]	170	16	107	170	17	100	170	[illegible]	
[illegible]	[illegible]	[illegible]	[illegible]	60	10	2.4	70	170	[illegible]	[illegible]	[illegible]	[illegible]	170	16	110	170	17	100	170	[illegible]	[illegible]
[illegible]	[illegible]	[illegible]	[illegible]	60	10	2.6	70	169	[illegible]	[illegible]	[illegible]	[illegible]	170	16	105	170	17	98	170	[illegible]	[illegible]
[illegible]	[illegible]	[illegible]	[illegible]	[illegible]	[illegible]	2.6	70	170	[illegible]	[illegible]	[illegible]	[illegible]	170	16	105	170	17	98	170	[illegible]	[illegible]
[illegible]	[illegible]	[illegible]	[illegible]	[illegible]	10	2.0	70	170	[illegible]	[illegible]	[illegible]	[illegible]	170	16	[illegible]	170	19	100	170	[illegible]	[illegible]
[illegible]	[illegible]	[illegible]	[illegible]	[illegible]	10	2.0	68	170	[illegible]	[illegible]	[illegible]	[illegible]	170	16	105	170	17	98	170	[illegible]	[illegible]
[illegible]	[illegible]	[illegible]	[illegible]	[illegible]	[illegible]	2.0	69	172	[illegible]	[illegible]	[illegible]	[illegible]	170	16	105	170	17	100	170	[illegible]	[illegible]
[illegible]	[illegible]	[illegible]	[illegible]	[illegible]	[illegible]	2.0	70	170	[illegible]	[illegible]	[illegible]	[illegible]	170	16	105	170	18	100	170	[illegible]	[illegible]
50	48	24	24	55	8	25	68	167	[illegible]	50	15	92	170	16	107	170	17	99	170	790	[illegible]
0	48	25	24	55	8	25	69	168		50	15	95	170	16	107	170	17	99	170	790	[illegible]

LOG ALL UNUSUAL CONDITIONS IN SPACE BELOW — 'DON'T SAY IT — WRITE IT'

#1 [illegible]

#2 [illegible]

Status [illegible]

ATTACHMENT 6

BAILEY RECORDER

% OXYGEN AND COMBUSTI

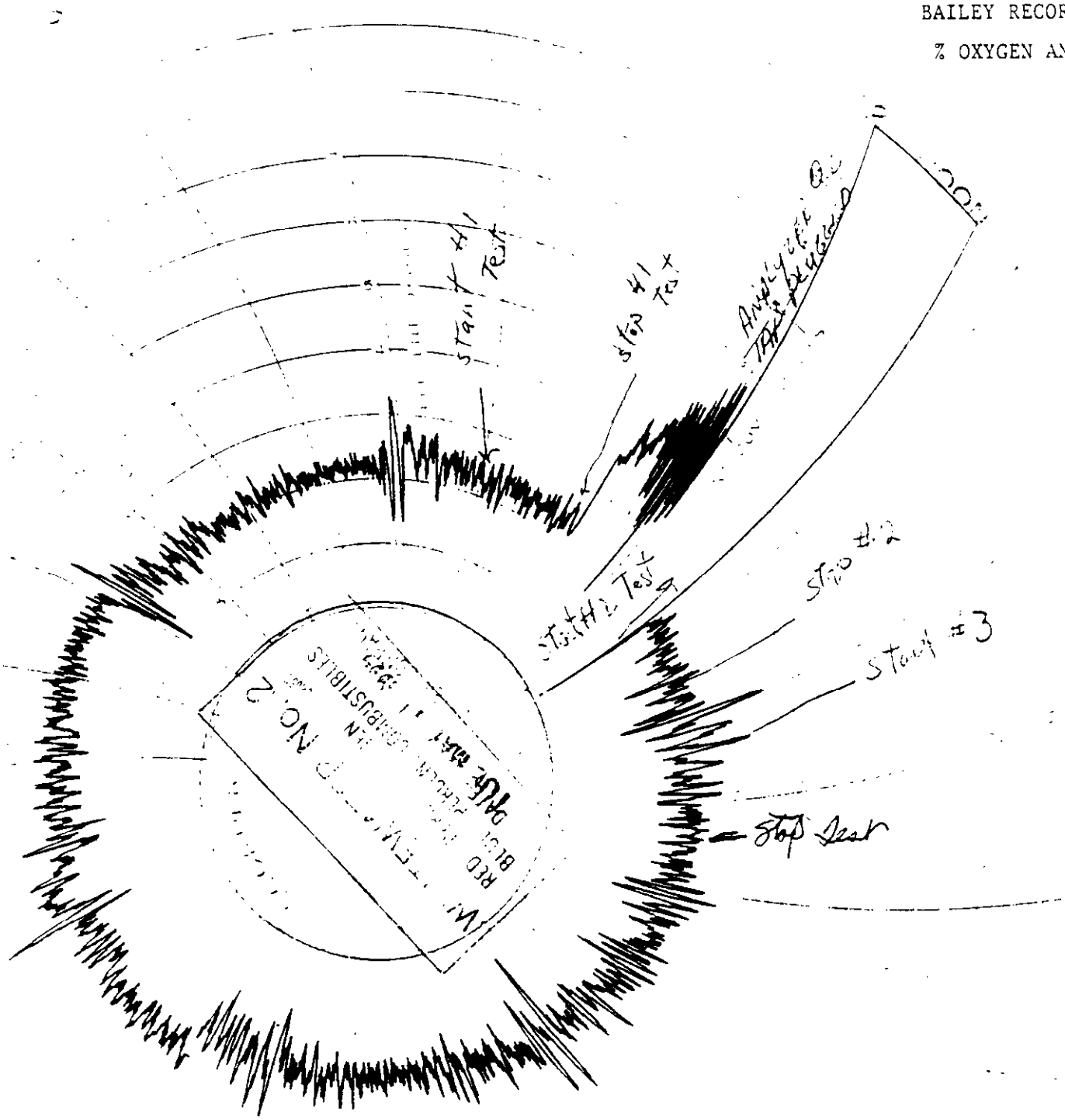

ATTACHMENT 7

BAILEY RECORDER

STEAM FLOW, AIR FLOW

AND THROTTLE PRESSURE

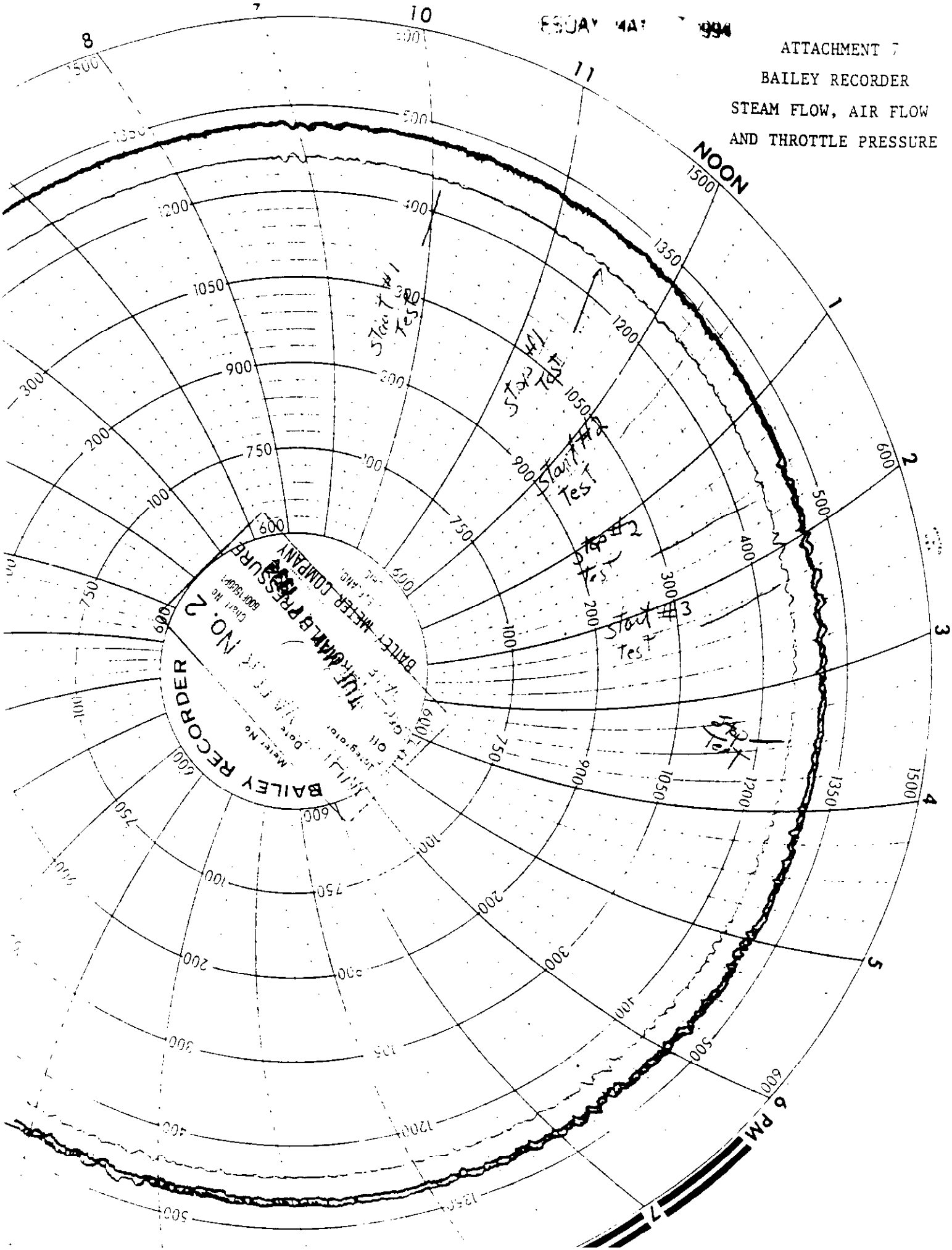

ATTACHMENT 2 TUESDAY MA 994

OPACITY

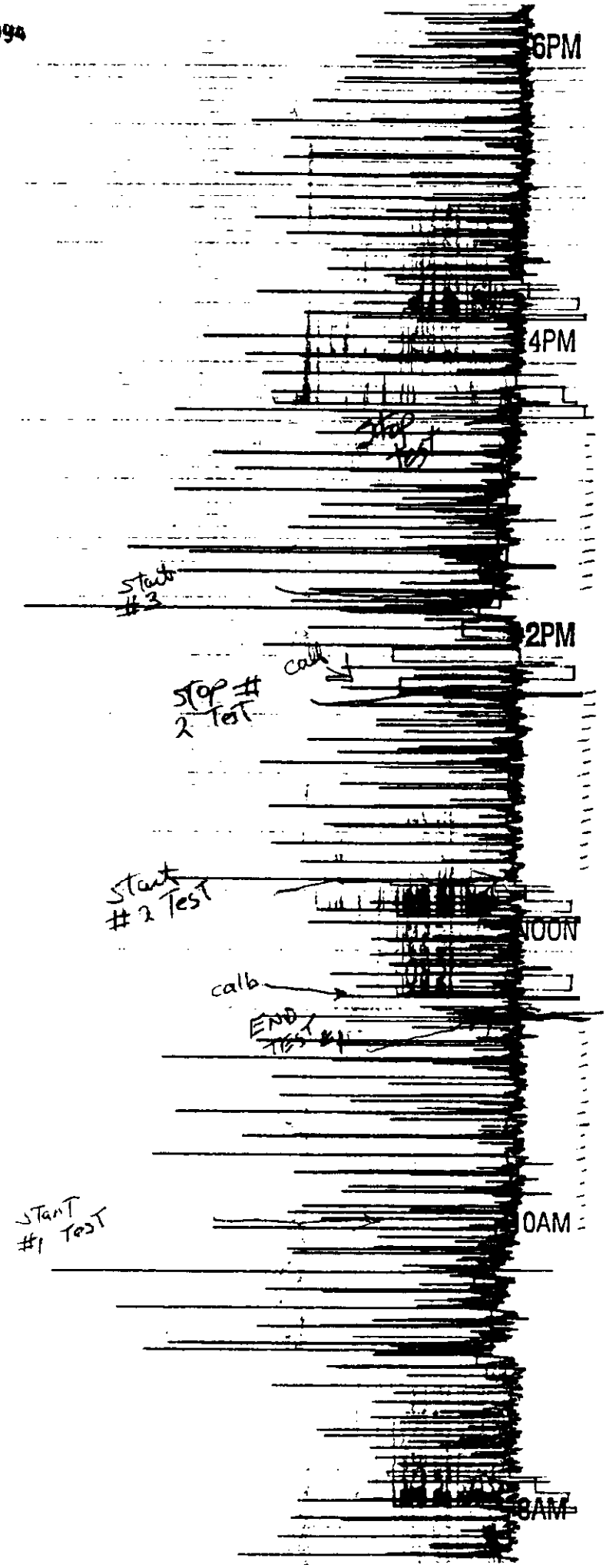

TEST RUN	MAX. OPACITY	AVG. OPACITY
#1	14%	11%
#2	13%	12%
#3	18%	14%
AVG =>	15%	12%

APPENDIX D

PRODUCTION INFORMATION - POST-LIFAC TESTS

LIFAC NA DEMONSTRATION PROJECT
RICHMOND POWER AND LIGHT
WHITEWATER VALLEY GENERATING UNIT #2

OPERATIONS AND POST-LIFAC TESTS
ENVIRONMENTAL MONITORING REPORT

ICF KAISER ENGINEERS, INC.
PITTSBURGH, PENNSYLVANIA

8-16-94

	Gen	#21	Coal Scales #22	#23
START	3811.	[illegible]	[illegible]	268187
	25.6	33	31	90

Coal Rate .890

EST #2	Gen	#21	#22	#23
15:53 STOP	90381	[illegible]	543953	268337
1532 START	89534	[illegible]	543871	268247
	1 4.7	34	82	90

Rate .907

#3	Gen	#21	#22	#23
1650 STOP	91630	189054	544072	268468
1635 START	90835	188976	543996	268384
	795	78	76	84

Rate 8.98

#4	Gen	#21	#22	#23
142 STOP	92817	[illegible]	544186	268595
136 START	92110	189103	544118	268520
	707	[illegible]	68	75

Rate [illegible]

317.7 382.9

RICHMOND POWER AN

WHITEWATER VALLEY STATI

SWITCHBOARD LOG

GENERATOR No. 2											INDIANA & MICHIGAN EL. CO. (to R.P.&L.)						
Temp		Amps							MWH Meter								
T	P	1	2	3	MW	MVAR (-) In	KV	Field Amps	Reads	MWH	IMP GEN	MW (-) Out	Reads X.1	MWH	Reserve	Short Term	Emer.	Amps
									81121				17057					
.2	9	2120	2080	2140	54	6	14.7	520	81674	55.3		16	17245	18.8		12		280
5	9	2010	1920	2020	50	0	14.7	505	82174	50.0		19	17433	18.8		12		275
.0	9	2000	1920	2010	50	0	14.7	505	82671	49.7		12	17618	18.5		12		275
0	9	2010	1930	2020	50	0	14.7	505	83168	49.7		15	17774	15.6		12		275
1	9	2020	1930	2020	50	0	14.6	505	83667	49.9		15	17947	17.3		8		280
.1	9	2190	2150	2190	54	0	14.6	515	84182	51.5		7	18090	14.3		8		320
23	9	2400	2310	2400	60	-1.0	14.6	550	84750	56.8		8	18188	9.8		0		360
5	9	2580	2500	2590	64	1.5	14.6	585	85371	62.1		10	18282	9.4		0		390
6	9	2590	2500	2590	64	3.0	14.6	590	86009	63.8		13	18403	12.1		6		395
60	9	2600	2500	2590	64	4.5	14.6	600	86648	63.9		18	18568	16.5		8		390
0	9	2590	2500	2590	64	3.0	14.6	595	87289	64.1		20	18778	21.0		12		395
2	9	2580	2500	2580	64	2.5	14.6	590	87926	63.7		21	18986	20.8		12		390
57	9	2580	2500	2580	64	3.5	14.6	595	88562	63.6		22	19211	22.5		14		400
7	9	2580	2500	2580	64	3.5	14.6	595	89197	63.5		24	19446	23.5		14		395
7	9	2580	2500	2580	64	3.0	14.6	590	89830	63.3		23	19673	22.7		14		400
7	9	2580	2500	2580	64	2.0	14.6	580	90467	63.7		20	19896	22.3		14		390
67	9	2570	2490	2580	64	1.0	14.6	580	91102	63.5		20	10110	21.4		11		400
7	9	2560	2490	2560	64	1.0	14.6	580	91736	63.4		16	10295	18.5		10		390
.7	9	2560	2480	2560	64	-1.0	14.6	570	92368	63.2		12	10445	15.0		7		390
57	9	2550	2490	2560	64	1.0	14.6	580	93002	63.4		16	10585	14.0		4		390
7	9	2560	2490	2580	64	1.0	14.6	580	93636	63.4		13	10740	15.5		4		390
5	9	2450	2390	2480	57	-1.0	14.6	560	94258	62.2		22	10886	14.6		2		380
63	9	2410	2310	2410	60	0	14.7	560	94837	57.9		20	11091	20.5		12		290
3	9	2360	2280	2340	59	0	14.7	555	95433	59.6		17	11280	18.9		12		280
									14312	1431.2			4223	422.3		220		

dicated	Maximum Indicated		Maximum		24 Hour	System Maximum		Time	12M	6AM	12N	6PM	MAX.
ime	MW	Time	MWH	Hour	Gross MWH Delivered	Net MWH	Time	Weather	Clear	clear	clear	clear	
								Temp.	60	55	74	75	81°
									NW	NW	SW	SW	
58/A	98.50	1105/A	97.30	11 A	2080.90	90.32	11 A						
32/A	26.0	317/P	23.50	2 P	422.30	23.50	2 P						
335/A	1230	124/P	120.10	2 P	2503.20	113.17	2 P						

"T SAY IT — WRITE IT"

.5

593.2 | 36.66 | 466.54
1396.8 | 92.30 | 1304.50
2310.4 | 147.77 | 2162.63

TUE AUG 16 1994

UNIT No. 2 AUX TRANS.					TOTAL HP		SYSTEM MWH		
No. 1			No. 2						
MWH Meter			MWH Meter						
Reads	MWH	Amps	Reads	MWH	WW VS	IM PA	GROSS	TOTAL HOUSE POWER	NET
45897			1567.0						
45946	4.9				6.35	0	88.90	6.35	82.55
45992	4.6				6.01	.1	83.60	6.11	77.49
46037	4.5				5.93	0	83.00	5.93	77.07
46083	4.6				6.02	0	80.30	6.02	74.28
46129	4.6				6.05	.1	82.70	6.15	76.55
46175	4.6				6.60	0	84.70	6.10	78.60
46223	4.8				6.55	0	92.00	6.55	85.45
46273	5.0				6.96	0	103.60	6.96	96.64
46324	5.1				7.02	0	108.90	7.02	101.88
46375	5.1				7.13	0	113.70	7.13	106.57
46425	5.0				6.98	.1	118.30	7.08	111.22
46475	5.0				6.90	0	117.70	6.90	110.80
46526	5.1				7.07	0	119.30	7.07	112.23
46576	5.0				6.93	0	120.10	6.93	113.17
46627	5.1				6.98	0	119.00	6.98	112.02
46677	5.0				6.89	0	119.10	6.89	112.21
46727	5.0				6.90	0	117.80	6.90	110.90
46777	5.0				6.89	0	115.10	6.89	108.21
46827	5.0				6.87	0	111.20	6.87	104.33
46878	5.1				6.99	.1	110.50	7.09	103.41
46928	5.0				6.89	0	112.40	6.89	105.51
46978	5.0				6.86	.1	108.50	6.96	101.54
47026	4.8				6.40	0	99.40	6.40	93.00
47074	4.8				6.23	0	93.40	6.23	87.17
1177	117.7				159.90	.5	2503.20	160.40	2342.80

INDUSTRIAL LINE

TIME	Amps 1	Amps 2	Amps 3	MW (-) In	MVAR (-) In
1	220	230	200	22.2	4.1
5	220	220	200	21.6	4.2
9	270	280	250	27.3	.4
1	290	300	260	29.0	.9
5	280	290	250	27.8	.2
9	280	280	250	27.9	0

BOSTON TWP. LINE

TIME	Amps 1	Amps 2	Amps 3	MW (-) In	MVAR (-) In
1	100	110	120	10.0	-6.0
5	110	110	120	9.9	-6.6
9	140	140	150	14.9	-5.6
1	130	130	140	14.3	-4.7
5	150	150	150	15.5	-5.6
9	140	140	150	15.6	-4.8

WHITEWATER LINE

TIME	Amps 1	Amps 2	Amps 3	MW (-) In	MVAR (-) In
1	270	270	270	37.8	-4.3
5	270	270	270	37.8	-7.2
9	350	350	350	41.6	-2.1
1	380	390	380	44.6	-.9
5	350	360	350	42.1	0
9	350	350	350	42.6	.8

TEST LINE

TIME	Amps 1	Amps 2	Amps 3	MW (-) In	MVAR (-) In
1	140	190	180	19.0	9.5
5	140	160	180	14.6	9.0
9	100	110	130	11.9	5.5
1	130	150	160	16.0	11.0
5	100	120	140	11.9	6.6
9	190	100	110	9.2	6.0

HT — WHITEWATER VALLEY STATIC
NTROL ROOM

#2 BOILER DRAFT											PULVERIZER										
		Windbox						ID Fan			NO. 21			NO. 22			NO. 23				
F. D. Fan Disch.	Air Htr. Air Inlet	Left	Right	Furnace	Boiler Outlet	Economizer Outlet	Air Htr. Gas Out	%	RPM	AMPS	Suction Press	Disch. Press	Temp.	Suction Press	Disch. Press	Temp.	Suction Press	Disch. Press	Temp.	First Stage Pressure	
11.2	5.7	2.5	2.4	.50	.8	2.7	8.1	14.8		142	1.4	9.8	170	1.7	10.2	170	1.7	9.6	170	760	2.
9.8	4.8	2.5	2.4	.55	.8	2.5	7.3	13.4		135	1.5	9.2	170	1.7	10.2	170	1.8	9.8	170	690	1.
9.5	4.8	2.5	2.3	.60	.8	2.5	7.3	13.2		134	1.4	9.3	170	1.7	10.2	170	1.8	10.0	170	690	1.
9.5	4.7	2.5	2.4	.60	.8	2.3	7.4	13.1		134	1.5	9.2	170	1.8	10.2	170	1.8	9.7	170	690	1.
9.7	4.7	2.5	2.4	.55	1.0	2.6	7.2	13.1		135	1.5	9.4	170	1.7	10.4	170	1.8	9.8	170	690	1.
10.6	5.5	2.5	2.5	.55	.9	2.6	7.8	14.2		138	1.5	9.8	170	1.7	10.6	170	1.7	9.8	170	720	1.
12.8	5.9	26	25	60	14	3.0	9.2	16.9		150	14	100	170	15	104	170	16	100	170	820	2.
13.9	6.5	29	28	60	14	3.2	9.5	17.5		153	12	100	170	14	104	170	14	9.9	170	900	2.
13.6	6.4	27	26	60	13	3.2	9.5	17.4		152	12	100	170	15	103	170	14	9.8	170	900	2.
13.5	6.3	28	27	55	13	3.2	9.5	17.4		152	12	100	170	15	104	170	14	100	170	900	2.
13.6	6.5	27	26	60	13	3.2	9.5	17.4		152	12	100	170	14	103	170	15	9.8	170	900	2.
13.6	6.5	27	27	60	13	3.2	9.6	17.5		152	12	100	170	15	103	170	15	9.8	170	900	2.8
13.5	6.4	28	27	55	13	3.2	9.5	17.4		151	13	100	170	15	104	170	14	9.9	170	900	2.8
13.4	6.3	27	27	50	14	3.2	9.5	17.5		151	12	100	170	15	103	170	14	9.8	170	900	2.9
13.4	6.2	2.6	2.6	.60	1.4	3.3	9.8	18.0		152	1.3	10.0	170	1.5	10.2	170	1.5	9.8	170	900	2.9
13.4	6.2	2.7	2.7	.60	1.3	3.2	9.4	17.3		151	1.2	10.0	170	1.4	10.3	170	1.4	9.6	170	900	2.9
13.3	6.2	2.6	2.6	.55	1.3	3.2	9.3	17.2		151	1.2	10.0	170	1.5	10.2	170	1.4	9.7	170	900	2.9
13.3	6.2	2.6	2.6	.60	1.2	3.2	9.3	17.1		151	1.2	10.0	170	1.4	10.2	170	1.4	9.5	170	900	2.9
13.2	6.2	2.7	2.7	.55	1.3	3.2	9.3	17.1		151	1.2	10.0	170	1.5	10.2	170	1.5	9.5	170	900	2.9
13.2	6.2	2.6	2.6	.60	1.2	3.2	9.3	17.1		151	1.2	10.0	170	1.4	10.3	170	1.4	9.6	170	900	2.9
13.3	6.2	2.7	2.7	.60	1.2	3.2	9.4	17.1		151	1.2	10.0	170	1.5	10.3	170	1.4	9.5	170	900	2.9
12.3	5.6	2.5	2.5	.50	1.1	3.1	9.0	16.8		149	1.3	9.9	170	1.5	10.2	170	1.5	9.5	170	850	2.8
1.5	5.7	2.5	2.4	.55	.9	2.7	8.4	15.2		144	1.4	10.0	170	1.7	10.4	170	1.6	9.4	170	825	2.5
1.5	5.4	2.7	2.5	.60	1.0	2.8	8.3	15.0		143	1.3	9.8	170	1.6	10.6	170	1.6	9.4	170	810	2.4

LOG ALL UNUSUAL CONDITIONS IN SPACE BELOW — "DON'T SAY IT — WRITE IT"

PULLED ASH FOR LIFAC TESTING (STACK TEST)

PULLED ASH FOR LIFAC TESTING (STACK TEST)

ASH SAMPLE FOR LIFAC

BAILEY RECORDER
WHITE
THE BAILEY METER COMPANY
CLEVELAND, OHIO
PERCENT OXYGEN
PERCENT COMBUSTIBLES
NOON
P.M.
START #3 1635 HR
END #3 1750 HR
END #2 1555 HR
TEST STOP
PRINTED IN U.S.A.

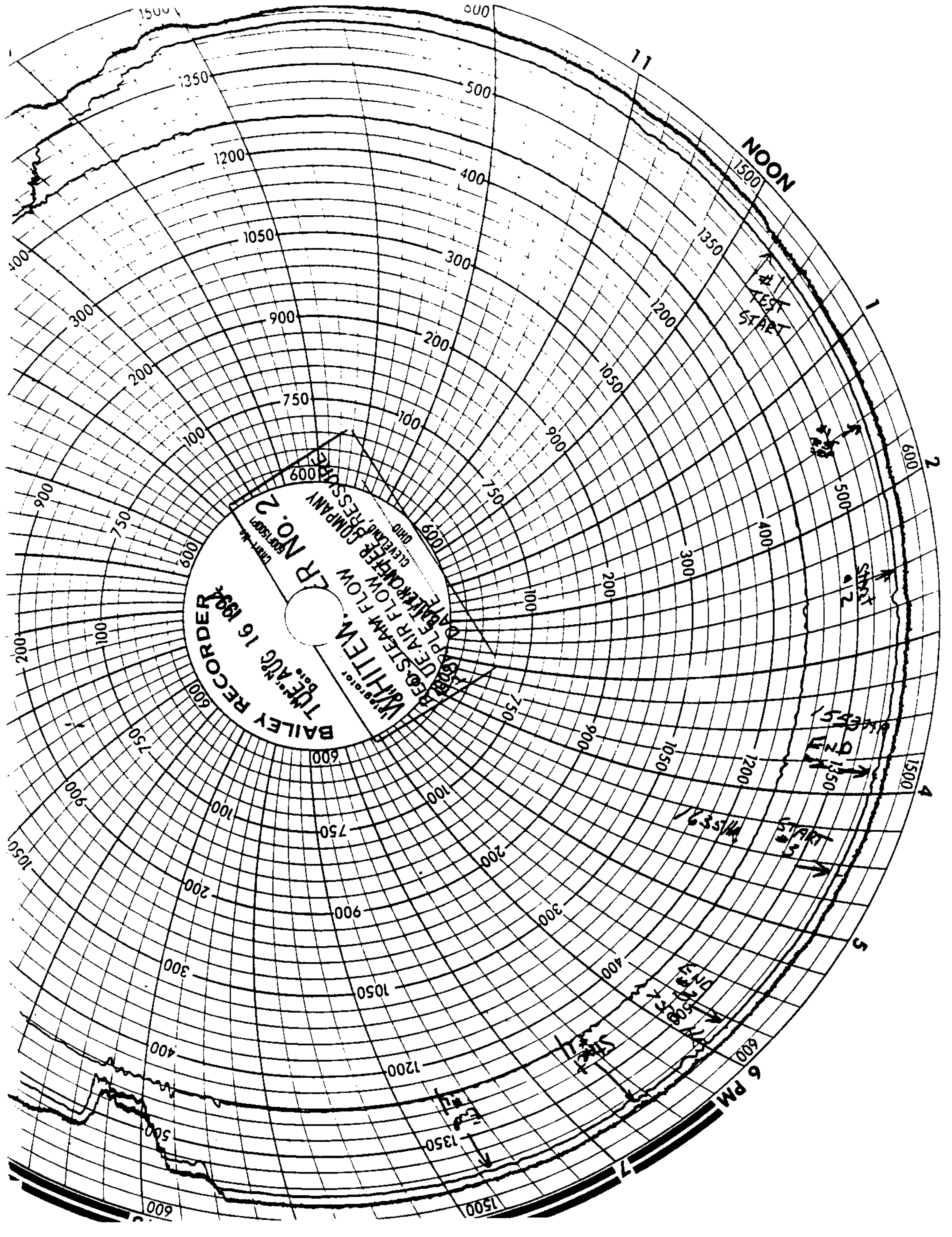

BAILEY RECORDER
NOON
6 PM
STEAM FLOW
AIR FLOW
COMPANY
CLEVELAND, OHIO
TUE AUG 16 1994
#1 TEST START

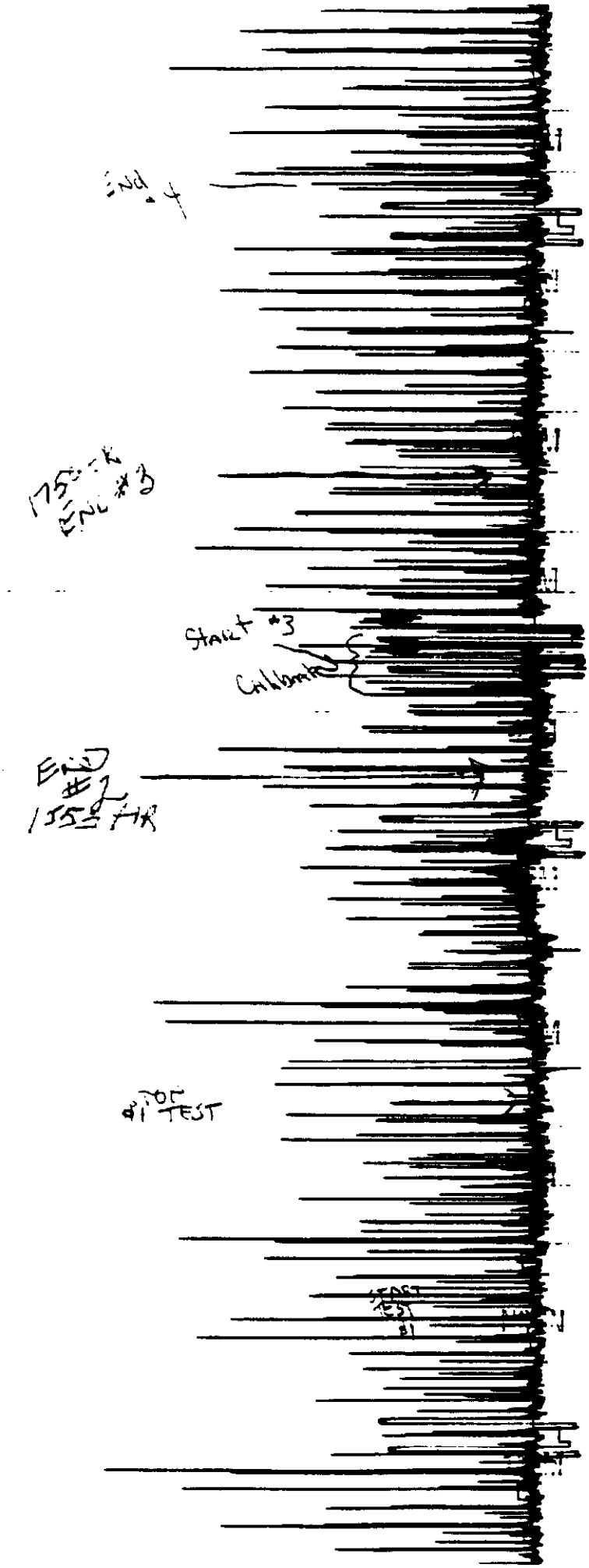
END #4
175°K
END #3
Start #3
Calibrate
END
#2
155°K
TEST
#1
START
TEST
#1

APPENDIX E

RP&L'S MONTHLY NPDES MONITORING REPORTS

LIFAC NA DEMONSTRATION PROJECT
RICHMOND POWER AND LIGHT
WHITEWATER VALLEY GENERATING UNIT #2

OPERATIONS AND POST-LIFAC TESTS
ENVIRONMENTAL MONITORING REPORT

ICF KAISER ENGINEERS, INC.
PITTSBURGH, PENNSYLVANIA

Facility Name (if different)

NAME RICHMOND CHEM & LINE

ADDRESS 2000 U.S. 27 SOUTH

RICHMOND IN 47374

FACILITY

LOCATION

ATTN: MR. ROBERT A. HART

(2-16) INDIVIDUAL PERMIT NUMBER: IN0055719

(19) DISCHARGE NUMBER: 001 A

F - FINAL

Form Approved.
OMB No. 2040-0004
Approval expires 10-31-94

MONITORING PERIOD	YEAR	MO	DAY		YEAR	MO	DAY
FROM	93	08	01	TO	93	08	31
	(20-21)	(22-23)	(24-25)		(26-27)	(28-29)	(30-31)

*** NO DATA |__| ***

NOTE: Read instructions before completing this form.

PARAMETER (32-37)		(3 Card Only) (46-53) QUANTITY OR LOADING (54-61) AVERAGE	MAXIMUM	UNITS	(4 Card Only) (38-45) QUALITY OR CONCENTRATION (46-53) MINIMUM	AVERAGE	MAXIMUM	UNITS	NO. EX (62-63)	FREQUENCY OF ANALYSIS (64-68)	SAMPLE TYPE (69-70)
TEMPERATURE, WATER DEG. FAHRENHEIT	SAMPLE MEASUREMENT	******	******		******	85.21	89.6	(15)	NA	02/07	Grab
00011 1 0 0 EFFLUENT GROSS VALUE	PERMIT REQUIREMENT	******	******	***** *****	******	REPORT MO AVG	REPORT DAILY MX	DEG.F		TWICE/WEEK	GRAB
PH	SAMPLE MEASUREMENT	******	******		7.50	******	7.61	(12)	0	01/07	Grab
00400 1 0 0 EFFLUENT GROSS VALUE	PERMIT REQUIREMENT	******	******	***** *****	6.0 MINIMUM	******	9.0 MAXIMUM	SU		WEEKLY	GRAB
SOLIDS, TOTAL SUSPENDED	SAMPLE MEASUREMENT	******	******		******	20.4	22	(19)	0	02/07	Grab
00530 1 0 0 EFFLUENT GROSS VALUE	PERMIT REQUIREMENT	******	******	***** *****	******	30.0 MO AVG	70.0 DAILY MX	MG/L		TWICE/WEEK	GRAB
OIL AND GREASE FREON EXTR-GRAV METH	SAMPLE MEASUREMENT	******	******		******	<1.0	<1.0	(19)	0	02/07	Grab
00556 1 0 0 EFFLUENT GROSS VALUE	PERMIT REQUIREMENT	******	******	***** *****	******	10.0 MO AVG	15.0 DAILY MX	MG/L		TWICE/WEEK	GRAB
NITROGEN, AMMONIA TOTAL (AS N)	SAMPLE MEASUREMENT	******	******		******	0.091	0.148	(19)	0	02/31	Grab
00610 1 1 0 EFFLUENT GROSS VALUE	PERMIT REQUIREMENT	******	******	***** *****	******	1.12 MO AVG	1.80 DAILY MX	MG/L		TWICE/MONTH	GRAB
IRON TOTAL RECOVERABLE	SAMPLE MEASUREMENT	******	******		******	0.612	0.748	(19)	NA	04/31	Grab
01060 1 0 0 EFFLUENT GROSS VALUE	PERMIT REQUIREMENT	******	******	***** *****	******	REPORT MO AVG	REPORT DAILY MX	MG/L		TWICE/MONTH	GRAB
ZINC TOTAL RECOVERABLE	SAMPLE MEASUREMENT	******	******		******	0.046	0.050	(19)	0	04/31	Grab
01094 1 0 0 EFFLUENT GROSS VALUE	PERMIT REQUIREMENT	******	******	***** *****	******	0.20 MO AVG	0.46 DAILY MX	MG/L		TWICE/MONTH	GRAB

NAME/TITLE PRINCIPAL EXECUTIVE OFFICER

TYPED OR PRINTED

I CERTIFY UNDER PENALTY OF LAW THAT I HAVE PERSONALLY EXAMINED AND AM FAMILIAR WITH THE INFORMATION SUBMITTED HEREIN AND BASED ON MY INQUIRY OF THOSE INDIVIDUALS IMMEDIATELY RESPONSIBLE FOR OBTAINING THE INFORMATION I BELIEVE THE SUBMITTED INFORMATION IS TRUE ACCURATE AND COMPLETE I AM AWARE THAT THERE ARE SIGNIFICANT PENALTIES FOR SUBMITTING FALSE INFORMATION INCLUDING THE POSSIBILITY OF FINE AND IMPRISONMENT SEE 18 USC § 1001 AND 33 USC § 1319 (Penalties under these statutes may include fines up to $10,000 and or maximum imprisonment of between 6 months and 5 years)

SIGNATURE OF PRINCIPAL EXECUTIVE OFFICER OR AUTHORIZED AGENT

TELEPHONE		DATE		
317	973-7000	93	09	17
AREA CODE	NUMBER	YEAR	MO	DAY

COMMENT AND EXPLANATION OF ANY VIOLATIONS (Reference all attachments here)

Facility (name and location if different)
R. L. LUMON POWER & LIGHT
ADDRESS 2000 N.S. 27 SOUTH
RICHMOND IN 47374

FACILITY
LOCATION
ATTN: MR. ROBERT A. HART

E IARC ONI NG: (2-16) INO055719 PERMIT NUMBER (19) 01 A DISCHARGE NUMBER

MINOR
F - FINAL

Form Approved.
OMB No. 2040-0001
Approval expires 10-31-94

MONITORING PERIOD	YEAR	MO	DAY		YEAR	MO	DAY
FROM	93	08	01	TO	93	08	31
	(20-21)	(22-23)	(24-25)		(26-27)	(28-29)	(30-31)

*** NO DATA |__| ***
NOTE: Read instructions before completing this form.

PARAMETER (32-37)		(3 Card Only) (46-53) QUANTITY OR LOADING (54-61) AVERAGE	MAXIMUM	UNITS	(4 Card Only) (38-45) QUALITY OR CONCENTRATION (46-53) MINIMUM	AVERAGE	(54-61) MAXIMUM	UNITS	NO. EX (62-63)	FREQUENCY OF ANALYSIS (64-68)	SAMPLE TYPE (69-70)
ALUMINUM, TOTAL RECOVERABLE 01104 1 0 0 EFFLUENT GROSS VALUE	SAMPLE MEASUREMENT	******	******		******	1.045	1.561	(19)	2	04/31	Grab
	PERMIT REQUIREMENT	******	******	**** ****	******	0.17 MO AVG	0.40 DAILY MX	MG/L		TWICE/MONTH	GRAB
LEAD TOTAL RECOVERABLE 01114 1 0 0 EFFLUENT GROSS VALUE	SAMPLE MEASUREMENT	******	******		******	0.007	0.008	(19)	0	04/31	Grab
	PERMIT REQUIREMENT	******	******	**** ****	******	0.01 MO AVG	0.02 DAILY MX	MG/L		TWICE/MONTH	GRAB
COPPER TOTAL RECOVERABLE 01119 1 0 0 EFFLUENT GROSS VALUE	SAMPLE MEASUREMENT	******	******		******	0.038	0.045	(19)	1	04/31	Grab
	PERMIT REQUIREMENT	******	******	**** ****	******	0.02 MO AVG	0.05 DAILY MX	MG/L		TWICE/MONTH	GRAB
OXIDANTS, TOTAL RESIDUAL 34044 1 0 0 EFFLUENT GROSS VALUE	SAMPLE MEASUREMENT	******	******		******	<0.05	<0.05	(19)	0	02/07	Grab
	PERMIT REQUIREMENT	******	******	**** ****	******	0.05 MO AVG	0.05 DAILY MX	MG/L		TWICE/WEEK	GRAB
FLOW, IN CONDUIT OR THRU TREATMENT PLANT 50050 1 0 0 EFFLUENT GROSS VALUE	SAMPLE MEASUREMENT	0.6960	0.8206	(03)	******	******	******		NA	03/07	Instan
	PERMIT REQUIREMENT	REPORT MO AVG	REPORT DAILY MX	MGD	******	******	******	**** ****		THREE/WEEK	INSTAN
	SAMPLE MEASUREMENT										
	PERMIT REQUIREMENT										
	SAMPLE MEASUREMENT										
	PERMIT REQUIREMENT										

NAME/TITLE PRINCIPAL EXECUTIVE OFFICER

TYPED OR PRINTED

I CERTIFY UNDER PENALTY OF LAW THAT I HAVE PERSONALLY EXAMINED AND AM FAMILIAR WITH THE INFORMATION SUBMITTED HEREIN AND BASED ON MY INQUIRY OF THOSE INDIVIDUALS IMMEDIATELY RESPONSIBLE FOR OBTAINING THE INFORMATION I BELIEVE THE SUBMITTED INFORMATION IS TRUE ACCURATE AND COMPLETE I AM AWARE THAT THERE ARE SIGNIFICANT PENALTIES FOR SUBMITTING FALSE INFORMATION INCLUDING THE POSSIBILITY OF FINE AND IMPRISONMENT SEE 18 USC § 1001 AND 33 USC § 1319 (Penalties under these statutes may include fines up to $10,000 and or maximum imprisonment of between 6 months and 5 years)

SIGNATURE OF PRINCIPAL EXECUTIVE OFFICER OR AUTHORIZED AGENT

TELEPHONE		DATE		
317	973-7000	93	09	17
AREA CODE	NUMBER	YEAR	MO	DAY

COMMENT AND EXPLANATION OF ANY VIOLATIONS (Reference all attachments here)

Facility Name/Location (if different)

NAME RICHMOND POWER & LIGHT

ADDRESS 2000 U.S. 27 SOUTH

RICHMOND IN 47374

FACILITY

LOCATION

ATTN: MR. ROBERT A. HART

DISCHARGE MONITORING REPORT (DMR)

(2-16) PERMIT NUMBER: IN0055719

(17-19) DISCHARGE NUMBER: 001 A

MINOR

F - FINAL

Form Approved.
OMB No. 2040-0004
Approval expires 10-31-94

MONITORING PERIOD

	YEAR	MO	DAY		YEAR	MO	DAY
FROM	93	09	01	TO	93	09	30
	(20-21)	(22-23)	(24-25)		(26-27)	(28-29)	(30-31)

*** NO DATA

NOTE: Read instructions before completing th

PARAMETER (32-37)		(3 Card Only) (46-53) QUANTITY OR LOADING (54-61) AVERAGE	MAXIMUM	UNITS	(4 Card Only) (38-45) QUALITY OR CONCENTRATION (46-53) MINIMUM	AVERAGE	(54-61) MAXIMUM	UNITS	NO. EX (62-63)	FREQUENCY OF ANALYSIS (64-67)	SAMPLE TYPE (68)
ALUMINUM, TOTAL RECOVERABLE 01104 1 0 0 EFFLUENT GROSS VALUE	SAMPLE MEASUREMENT	******	******		******	1.066	1.366	(19)	2	04/31	Grab
	PERMIT REQUIREMENT	******	******	******	******	0.17 MO AVG	0.40 DAILY MX	MG/L		TWICE/MONTH	GRAB
LEAD TOTAL RECOVERABLE 01114 1 0 0 EFFLUENT GROSS VALUE	SAMPLE MEASUREMENT	******	******		******	0.006	0.006	(19)	0	09/31	Grab
	PERMIT REQUIREMENT	******	******	******	******	0.01 MO AVG	0.02 DAILY MX	MG/L		TWICE/MONTH	GRAB
COPPER TOTAL RECOVERABLE 01119 1 0 0 EFFLUENT GROSS VALUE	SAMPLE MEASUREMENT	******	******		******	0.057	0.061	(19)	2	04/31	Grab
	PERMIT REQUIREMENT	******	******	******	******	0.02 MO AVG	0.05 DAILY MX	MG/L		TWICE/MONTH	GRAB
OXIDANTS, TOTAL RESIDUAL 34044 1 0 0 EFFLUENT GROSS VALUE	SAMPLE MEASUREMENT	******	******		******	<0.05	<0.05	(19)	0	09/07	Grab
	PERMIT REQUIREMENT	******	******	******	******	0.05 MO AVG	0.05 DAILY MX	MG/L		TWICE/WEEK	GRAB
FLOW, IN CONDUIT OR THRU TREATMENT PLANT 50050 1 0 0 EFFLUENT GROSS VALUE	SAMPLE MEASUREMENT	0.7255	0.9609	(03)	******	******	******		0	[illegible]	
	PERMIT REQUIREMENT	REPORT MO AVG	REPORT DAILY MX	MGD	******	******	******	******		THREE/WEEK	[illegible]
	SAMPLE MEASUREMENT										
	PERMIT REQUIREMENT										
	SAMPLE MEASUREMENT										
	PERMIT REQUIREMENT										

NAME/TITLE PRINCIPAL EXECUTIVE OFFICER

TYPED OR PRINTED

I CERTIFY UNDER PENALTY OF LAW THAT I HAVE PERSONALLY EXAMINED AND AM FAMILIAR WITH THE INFORMATION SUBMITTED HEREIN AND BASED ON MY INQUIRY OF THOSE INDIVIDUALS IMMEDIATELY RESPONSIBLE FOR OBTAINING THE INFORMATION, I BELIEVE THE SUBMITTED INFORMATION IS TRUE, ACCURATE AND COMPLETE. I AM AWARE THAT THERE ARE SIGNIFICANT PENALTIES FOR SUBMITTING FALSE INFORMATION, INCLUDING THE POSSIBILITY OF FINE AND IMPRISONMENT. SEE 18 USC § 1001 AND 33 USC § 1319. *(Penalties under these statutes may include fines up to $10,000 and/or maximum imprisonment of between 6 months and 5 years.)*

SIGNATURE OF PRINCIPAL EXECUTIVE OFFICER OR AUTHORIZED AGENT

TELEPHONE: AREA CODE 317, NUMBER 973-7200

DATE: YEAR 93, MO 10, D

COMMENT AND EXPLANATION OF ANY VIOLATIONS (*Reference all attachments here*)

(Name) (Mailing Address)

NAME RICHMOND POWER & LIGHT

ADDRESS 2000 U.S. 27 SOUTH

RICHMOND IN 47374

FACILITY

LOCATION

ATTN: MR. ROBERT A. HART

DISCHARGE MONITORING REPORT (DMR)

(2-16) INC055719 — PERMIT NUMBER

(17-19) 001 A — DISCHARGE NUMBER

MINOR

F - FINAL

Form Approved.
OMB No. 2040-0004
Approval expires 10-31-94

MONITORING PERIOD	YEAR	MO	DAY		YEAR	MO	DAY
FROM	93	09	01	TO	93	09	30
	(20-21)	(22-23)	(24-25)		(26-27)	(28-29)	(30-31)

*** NO DATA |__| ***

NOTE: Read instructions before completing this form

PARAMETER (32-37)		(3 Card Only) QUANTITY OR LOADING (46-53) AVERAGE	(54-61) MAXIMUM	UNITS	(4 Card Only) QUALITY OR CONCENTRATION (38-45) MINIMUM	(46-53) AVERAGE	(54-61) MAXIMUM	UNITS	NO. EX	FREQUENCY OF ANALYSIS	SAMPLE TYPE
TEMPERATURE, WATER DEG. FAHRENHEIT 00011 1 0 0 EFFLUENT GROSS VALUE	SAMPLE MEASUREMENT	******	******		******	77.1	81.[illegible]	(15)	N/A	[illegible]	
	PERMIT REQUIREMENT	******	******	**** ****	******	REPORT MO AVG	REPORT DAILY MX	DEG. C		TWICE/WEEK	
PH 00400 1 0 0 EFFLUENT GROSS VALUE	SAMPLE MEASUREMENT	******	******		7.55	******	7.79	(19)	0	09/07	
	PERMIT REQUIREMENT	******	******	**** ****	6.0 MINIMUM	******	9.0 MAXIMUM	SU		WEEKLY	GRAB
SOLIDS, TOTAL SUSPENDED 00530 1 0 0 EFFLUENT GROSS VALUE	SAMPLE MEASUREMENT	******	******		******	19.1	25	(19)	0	09/07	Grab
	PERMIT REQUIREMENT	******	******	**** ****	******	30.0 MO AVG	70.0 DAILY MX	MG/L		TWICE/WEEK	GRAB
OIL AND GREASE FREON EXTR-GRAV METH 00556 1 0 0 EFFLUENT GROSS VALUE	SAMPLE MEASUREMENT	******	******		******	<1.1	1.5	(19)	0	09/07	Grab
	PERMIT REQUIREMENT	******	******	**** ****	******	10.0 MO AVG	15.0 DAILY MX	MG/L		TWICE/WEEK	GRAB
NITROGEN, AMMONIA TOTAL (AS N) 00610 1 1 0 EFFLUENT GROSS VALUE	SAMPLE MEASUREMENT	******	******		******	0.110	0.113	(19)	0	09/31	Grab
	PERMIT REQUIREMENT	******	******	**** ****	******	1.12 MO AVG	1.80 DAILY MX	MG/L		TWICE/MONTH	GRAB
IRON TOTAL RECOVERABLE 00980 1 0 0 EFFLUENT GROSS VALUE	SAMPLE MEASUREMENT	******	******		******	0.936	0.990	(19)	N/A	09/31	Grab
	PERMIT REQUIREMENT	******	******	**** ****	******	REPORT MO AVG	REPORT DAILY MX	MG/L		TWICE/MONTH	GRAB
ZINC TOTAL RECOVERABLE 01094 1 0 0 EFFLUENT GROSS VALUE	SAMPLE MEASUREMENT	******	******		******	0.054	0.058	(19)	0	[illegible]	
	PERMIT REQUIREMENT	******	******	**** ****	******	0.20 MO AVG	0.46 DAILY MX	MG/L		TWICE/MONTH	GRAB

NAME/TITLE PRINCIPAL EXECUTIVE OFFICER

TYPED OR PRINTED

I CERTIFY UNDER PENALTY OF LAW THAT I HAVE PERSONALLY EXAMINED AND AM FAMILIAR WITH THE INFORMATION SUBMITTED HEREIN AND BASED ON MY INQUIRY OF THOSE INDIVIDUALS IMMEDIATELY RESPONSIBLE FOR OBTAINING THE INFORMATION I BELIEVE THE SUBMITTED INFORMATION IS TRUE, ACCURATE AND COMPLETE. I AM AWARE THAT THERE ARE SIGNIFICANT PENALTIES FOR SUBMITTING FALSE INFORMATION, INCLUDING THE POSSIBILITY OF FINE AND IMPRISONMENT. SEE 18 USC § 1001 AND 33 USC § 1319 (*Penalties under these statutes may include fines up to $10,000 and/or maximum imprisonment of between 6 months and 5 years.*)

SIGNATURE OF PRINCIPAL EXECUTIVE OFFICER OR AUTHORIZED AGENT

TELEPHONE		DATE		
317	973-7000	93	10	2
AREA CODE	NUMBER	YEAR	MO	DA

COMMENT AND EXPLANATION OF ANY VIOLATIONS (*Reference all attachments here*)

MITTI NAE/A SSTA

Facility Name/Location if different)

NAME RICHMOND POWER & LIGHT

ADDRESS 2000 U.S. 27 SOUTH

RICHMOND IN 47374

FACILITY

LOCATION

ATTN: MR. ROBERT A. HART

NAT POLL DISC FECI N SI NPD

DISCHARGE MONITORING REPORT (DMR)

(2-16) PERMIT NUMBER: IN0055719

(17-19) DISCHARGE NUMBER: 001 A

MINOR

F - FINAL

Form Approved.
OMB No. 2040-0004
Approval expires 10-31-94

MONITORING PERIOD	YEAR	MO	DAY		YEAR	MO	DAY
FROM	93	10	01	TO	93	10	31
	(20-21)	(22-23)	(24-25)		(26-27)	(28-29)	(30-31)

*** NO DISCHARGE |__| ***

NOTE: Read instructions before completing this form.

PARAMETER (32-37)		QUANTITY OR LOADING (3 Card Only) (46-53) AVERAGE	(54-61) MAXIMUM	UNITS	QUALITY OR CONCENTRATION (4 Card Only) (38-45) MINIMUM	(46-53) AVERAGE	(54-61) MAXIMUM	UNITS	NO. EX (62-63)	FREQUENCY OF ANALYSIS (64-69)	SAMPLE TYPE (70)
TEMPERATURE, WATER DEG. FAHRENHEIT	SAMPLE MEASUREMENT	******	******		******	64.7	70.6	(15)	NA	02/07	Grab
00011 1 0 0 EFFLUENT GROSS VALUE	PERMIT REQUIREMENT	******	******	***** *****	******	REPORT MO AVG	REPORT DAILY MX	DEG.F		TWICE/WEEK	GRAB
PH	SAMPLE MEASUREMENT	******	******		7.04	******	7.84	(12)	0	01/07	Grab
00400 1 0 0 EFFLUENT GROSS VALUE	PERMIT REQUIREMENT	******	******	***** *****	6.0 MINIMUM	******	9.0 MAXIMUM	SU		WEEKLY	GRAB
SOLIDS, TOTAL SUSPENDED	SAMPLE MEASUREMENT	******	******		******	13.11	20	(19)	0	02/07	Grab
00530 1 0 0 EFFLUENT GROSS VALUE	PERMIT REQUIREMENT	******	******	***** *****	******	30.0 MO AVG	70.0 DAILY MX	MG/L		TWICE/WEEK	GRAB
OIL AND GREASE FREON EXTR-GRAV METH	SAMPLE MEASUREMENT	******	******		******	<2.72	13.7	(19)	0	02/07	Grab
00556 1 0 0 EFFLUENT GROSS VALUE	PERMIT REQUIREMENT	******	******	***** *****	******	10.0 MO AVG	15.0 DAILY MX	MG/L		TWICE/WEEK	GRAB
NITROGEN, AMMONIA TOTAL (AS N)	SAMPLE MEASUREMENT	******	******		******	0.182	0.242	(19)	0	02/31	Grab
00610 1 1 0 EFFLUENT GROSS VALUE	PERMIT REQUIREMENT	******	******	***** *****	******	1.12 MO AVG	1.80 DAILY MX	MG/L		TWICE/MONTH	GRAB
IRON TOTAL RECOVERABLE	SAMPLE MEASUREMENT	******	******		******	1.040	1.260	(19)	NA	04/31	Grab
00980 1 0 0 EFFLUENT GROSS VALUE	PERMIT REQUIREMENT	******	******	***** *****	******	REPORT MO AVG	REPORT DAILY MX	MG/L		TWICE/MONTH	GRAB
ZINC TOTAL RECOVERABLE	SAMPLE MEASUREMENT	******	******		******	0.071	0.071	(19)	0	02/31	Grab
01094 1 0 0 EFFLUENT GROSS VALUE	PERMIT REQUIREMENT	******	******	***** *****	******	0.20 MO AVG	0.46 DAILY MX	MG/L		TWICE/MONTH	GRAB

NAME/TITLE PRINCIPAL EXECUTIVE OFFICER

TYPED OR PRINTED

I CERTIFY UNDER PENALTY OF LAW THAT I HAVE PERSONALLY EXAMINED AND AM FAMILIAR WITH THE INFORMATION SUBMITTED HEREIN AND BASED ON MY INQUIRY OF THOSE INDIVIDUALS IMMEDIATELY RESPONSIBLE FOR OBTAINING THE INFORMATION. I BELIEVE THE SUBMITTED INFORMATION IS TRUE, ACCURATE AND COMPLETE. I AM AWARE THAT THERE ARE SIGNIFICANT PENALTIES FOR SUBMITTING FALSE INFORMATION, INCLUDING THE POSSIBILITY OF FINE AND IMPRISONMENT. SEE 18 U.S.C. § 1001 AND 33 U.S.C. § 1319. *(Penalties under these statutes may include fines up to $10,000 and or maximum imprisonment of between 6 months and 5 years.)*

SIGNATURE OF PRINCIPAL EXECUTIVE OFFICER OR AUTHORIZED AGENT

TELEPHONE: AREA CODE 317 NUMBER 973-2000

DATE: YEAR 93 MO 11

COMMENT AND EXPLANATION OF ANY VIOLATIONS *(Reference all attachments here)*

PERMITTEE NAME AND MAILING ADDRESS (Name, Street, City, State, and Zip Code)

NAME: [illegible] POWER & LIGHT

ADDRESS: [illegible] U.S. 27 SOUTH

[illegible] RICHMOND IN 47374

FACILITY

LOCATION

ATTN: Mr. ROBERT A. HART

DISCHARGE UNIT GRID (2-16): IN 0055719

PERMIT NUMBER

(17-19): 001 A

DISCHARGE NUMBER

MINOR

F - FINAL

Form Approved.
OMB No. 2040-0004
Approval expires 10-31-94

MONITORING PERIOD

	YEAR	MO	DAY		YEAR	MO	DAY
FROM	93	11	01	TO	93	10	31
	(20-21)	(22-23)	(24-25)		(26-27)	(28-29)	(30-31)

*** NO DISCHARGE |__| ***

NOTE: Read instructions before completing this form.

PARAMETER (12-37)		QUANTITY OR LOADING (3 Card Only) (46-53) AVERAGE	QUANTITY OR LOADING (54-61) MAXIMUM	UNITS	QUALITY OR CONCENTRATION (4 Card Only) (38-45) MINIMUM	QUALITY OR CONCENTRATION (46-53) AVERAGE	QUALITY OR CONCENTRATION (54-61) MAXIMUM	UNITS	NO EX (62-63)	FREQUENCY OF ANALYSIS (64-68)	SAMPLE TYPE (69-70)
ALUMINUM, TOTAL RECOVERABLE	SAMPLE MEASUREMENT	******	******		******	0.824	0.958	(19)	2	04/31	Grab
01104 1 0 0 EFFLUENT GROSS VALUE	PERMIT REQUIREMENT	******	******	*****	******	0.17 MO AVG	0.40 DAILY MX	MG/L		TWICE/MONTH	GRAB
LEAD TOTAL RECOVERABLE	SAMPLE MEASUREMENT	******	******		******	0.006	0.007	(19)	0	02/31	Grab
01114 1 0 0 EFFLUENT GROSS VALUE	PERMIT REQUIREMENT	******	******	*****	******	0.01 MO AVG	0.02 DAILY MX	MG/L		TWICE/MONTH	GRAB
COPPER TOTAL RECOVERABLE	SAMPLE MEASUREMENT	******	******		******	0.046	0.081	(19)	2	04/31	Grab
01119 1 0 0 EFFLUENT GROSS VALUE	PERMIT REQUIREMENT	******	******	*****	******	0.02 MO AVG	0.05 DAILY MX	MG/L		TWICE/MONTH	GRAB
OXIDANTS, TOTAL RESIDUAL	SAMPLE MEASUREMENT	******	******		******	<0.05	<0.05	(19)	0	02/07	Grab
34044 1 0 0 EFFLUENT GROSS VALUE	PERMIT REQUIREMENT	******	******	*****	******	0.05 MO AVG	0.05 DAILY MX	MG/L		TWICE/WEEK	GRAB
FLOW, IN CONDUIT OR THRU TREATMENT PLANT	SAMPLE MEASUREMENT	.6071	.7618	(03)	******	******	******		NA	03/07	Instan.
50050 1 0 0 EFFLUENT GROSS VALUE	PERMIT REQUIREMENT	REPORT MO AVG	REPORT DAILY MX	MGD	******	******	******	*****		THREE/WEEK	INSTAN
	SAMPLE MEASUREMENT										
	PERMIT REQUIREMENT										
	SAMPLE MEASUREMENT										
	PERMIT REQUIREMENT										

NAME/TITLE PRINCIPAL EXECUTIVE OFFICER

TYPED OR PRINTED

I CERTIFY UNDER PENALTY OF LAW THAT I HAVE PERSONALLY EXAMINED AND AM FAMILIAR WITH THE INFORMATION SUBMITTED HEREIN AND BASED ON MY INQUIRY OF THOSE INDIVIDUALS IMMEDIATELY RESPONSIBLE FOR OBTAINING THE INFORMATION I BELIEVE THE SUBMITTED INFORMATION IS TRUE ACCURATE AND COMPLETE I AM AWARE THAT THERE ARE SIGNIFICANT PENALTIES FOR SUBMITTING FALSE INFORMATION INCLUDING THE POSSIBILITY OF FINE AND IMPRISONMENT SEE 18 USC § 1001 AND 33 USC § 1319 (Penalties under these statutes may include fines up to $10,000 and or maximum imprisonment of between 6 months and 5 years)

SIGNATURE OF PRINCIPAL EXECUTIVE OFFICER OR AUTHORIZED AGENT

TELEPHONE		DATE		
317	973-7000	93	11	2[illegible]
AREA CODE	NUMBER	YEAR	MO	DA

COMMENT AND EXPLANATION OF ANY VIOLATIONS (Reference all attachments here)

[illegible] (WHICH MAY NOT BE USED) RICHMOND

PAGE OF

ADDRESS [illegible] IN 47373

FACILITY

LOCATION

ATTN: Mr. ROBERT A. HART

PERMIT NUMBER	DISCHARGE NUMBER
IN 055712	001 A

MINOR

F - FINAL

Form Approved.
OMB No. 2040-0004
Approval expires 10-31-94

MONITORING PERIOD	YEAR	MO	DAY		YEAR	MO	DAY
FROM	93	11	01	TO	93	11	30
	(20-21)	(22-23)	(24-25)		(26-27)	(28-29)	(30-31)

*** NO DISCHARGE |__| ***

NOTE: Read instructions before completing this form.

PARAMETER		(3 Card Only) QUANTITY OR LOADING (46-53) AVERAGE	(54-61) MAXIMUM	UNITS	(4 Card Only) QUALITY OR CONCENTRATION (38-45) MINIMUM	(46-53) AVERAGE	(54-61) MAXIMUM	UNITS	NO. EX (62-63)	FREQUENCY OF ANALYSIS (64-68)	SAMPL TYPE (69-70)
TEMPERATURE, WATER DEG. FAHRENHEIT (00011 1 0 0) EFFLUENT GROSS VALUE	SAMPLE MEASUREMENT	*******	*******		******	61.2	68.0	(15)	NA	02/07	Grab
	PERMIT REQUIREMENT	*******	*******	***** *****	******	REPORT MO AVG	REPORT DAILY MX	DEG.F		TWICE/WEEK	GRAB
PH (00400 1 0 0) EFFLUENT GROSS VALUE	SAMPLE MEASUREMENT	*******	*******		7.41	******	8.00	(12)	0	01/07	Grab
	PERMIT REQUIREMENT	******	*******	***** *****	6.0 MINIMUM	******	9.0 MAXIMUM	SU		WEEKLY	GRAB
[illegible] (00530 1 0 0) EFFLUENT GROSS VALUE	SAMPLE MEASUREMENT	*******	*******		******	19.5	31	(19)	0	02/07	Grab
	PERMIT REQUIREMENT	*******	*******	***** *****	******	30.0 MO AVG	70.0 DAILY MX	MG/L		TWICE/WEEK	GRAB
OIL AND GREASE FREON EXTR-GRAV METH (00556 1 0 0) EFFLUENT GROSS VALUE	SAMPLE MEASUREMENT	*******	*******		******	<1.82	2.7	(19)	0	02/07	Grab
	PERMIT REQUIREMENT	******	*******	***** *****	******	10.0 MO AVG	15.0 DAILY MX	MG/L		TWICE/WEEK	GRAB
NITROGEN, AMMONIA TOTAL (AS N) (00610 1 1 0) EFFLUENT GROSS VALUE	SAMPLE MEASUREMENT	*******	*******		******	0.03	0.044	(19)	0	02/30	Grab
	PERMIT REQUIREMENT	******	******	***** *****	******	1.12 MO AVG	1.80 DAILY MX	MG/L		TWICE/MONTH	GRAB
IRON TOTAL RECOVERABLE (01045 1 0 0) EFFLUENT GROSS VALUE	SAMPLE MEASUREMENT	*******	*******		******	1.747	3.335	(19)	NA	04/30	Grab
	PERMIT REQUIREMENT	******	*******	***** *****	******	REPORT MO AVG	REPORT DAILY MX	MG/L		TWICE/MONTH	GRAB
ZINC TOTAL RECOVERABLE (01094 1 0 0) EFFLUENT GROSS VALUE	SAMPLE MEASUREMENT	*******	*******		******	0.098	0.106	(19)	0	02/30	Grab
	PERMIT REQUIREMENT	******	*******	***** *****	******	0.20 MO AVG	0.46 DAILY MX	MG/L		TWICE/MONTH	GRAB

NAME/TITLE PRINCIPAL EXECUTIVE OFFICER

I CERTIFY UNDER PENALTY OF LAW THAT I HAVE PERSONALLY EXAMINED AND AM FAMILIAR WITH THE INFORMATION SUBMITTED HEREIN AND BASED [illegible]

SIGNATURE OF PRINCIPAL EXECUTIVE OFFICER OR AUTHORIZED AGENT

TELEPHONE		DATE		
317 973 7060		93	12	20
AREA CODE	NUMBER	YEAR	MO	DA

[illegible] OF ATTACHMENTS (Reference all attachments)

EPA Form 3320-1 (Rev. 9-88) Previous editions may be used (REPLACES EPA FORM T-40 WHICH MAY NOT BE USED)

RICHMOND

MITT
Facility Name/Location if different

NAME RICHMOND POWER & LIGHT
ADDRESS 2000 U.S. 27 SOUTH
RICHMOND IN 47374

FACILITY
LOCATION

ATTN: MR. ROBERT A. HART

DISCHARGE MONITORING REPORT (DMR)

(2-16)	(17-19)
IN0055719	001 A
PERMIT NUMBER	DISCHARGE NUMBER

MINOR

F - FINAL

Form Approved.
OMB No. 2040-0004
Approval expires 10-31-94

MONITORING PERIOD	YEAR	MO	DAY		YEAR	MO	DAY
FROM	93	11	01	TO	93	11	30
	(20-21)	(22-23)	(24-25)		(26-27)	(28-29)	(30-31)

*** NO DISCHARGE |__| ***

NOTE: Read instructions before completing this form.

PARAMETER (32-37)		(3 Card Only) (46-53) QUANTITY OR LOADING (54-61) AVERAGE	MAXIMUM	UNITS	(4 Card Only) (38-45) QUALITY OR CONCENTRATION (46-53) MINIMUM	AVERAGE	MAXIMUM	UNITS	NO EX (62-63)	FREQUENCY OF ANALYSIS (64-68)	SAM TYI (69
ALUMINUM, TOTAL RECOVERABLE 01104 1 0 0 EFFLUENT GROSS VALUE	SAMPLE MEASUREMENT	******	******		******	0.528	0.600	(19)	2	02/30	Gra
	PERMIT REQUIREMENT	******	******	********	******	0.17 MO AVG	0.40 DAILY MX	MG/L		TWICE/MONTH	GRAB
LEAD TOTAL RECOVERABLE 01114 1 0 0 EFFLUENT GROSS VALUE	SAMPLE MEASUREMENT	******	******		******	0.004	0.005	(19)	0	02/30	Gr
	PERMIT REQUIREMENT	******	******	********	******	0.01 MO AVG	0.02 DAILY MX	MG/L		TWICE/MONTH	GRAB
COPPER TOTAL RECOVERABLE 01119 1 0 0 EFFLUENT GROSS VALUE	SAMPLE MEASUREMENT	******	******		******	0.064	0.080	(19)	2	04/30	Gr
	PERMIT REQUIREMENT	******	******	********	******	0.02 MO AVG	0.05 DAILY MX	MG/L		TWICE/MONTH	GRAB
OXIDANTS, TOTAL RESIDUAL 34044 1 0 0 EFFLUENT GROSS VALUE	SAMPLE MEASUREMENT	******	******		******	<0.05	<0.05	(19)	0	02/07	Gra
	PERMIT REQUIREMENT	******	******	********	******	0.05 MO AVG	0.05 DAILY MX	MG/L		TWICE/WEEK	GRAB
FLOW, IN CONDUIT OR THRU TREATMENT PLANT 50050 1 0 0 EFFLUENT GROSS VALUE	SAMPLE MEASUREMENT	0.5650	0.7039	(03)	******	******	******		NA	03/07	Ins
	PERMIT REQUIREMENT	REPORT MO AVG	REPORT DAILY MX	MGD	******	******	******	********		THREE/WEEK	INST
	SAMPLE MEASUREMENT										
	PERMIT REQUIREMENT										
	SAMPLE MEASUREMENT										
	PERMIT REQUIREMENT										

NAME/TITLE PRINCIPAL EXECUTIVE OFFICER

TYPED OR PRINTED

I CERTIFY UNDER PENALTY OF LAW THAT I HAVE PERSONALLY EXAMINED AND AM FAMILIAR WITH THE INFORMATION SUBMITTED HEREIN; AND BASED ON MY INQUIRY OF THOSE INDIVIDUALS IMMEDIATELY RESPONSIBLE FOR OBTAINING THE INFORMATION I BELIEVE THE SUBMITTED INFORMATION IS TRUE, ACCURATE AND COMPLETE. I AM AWARE THAT THERE ARE SIGNIFICANT PENALTIES FOR SUBMITTING FALSE INFORMATION, INCLUDING THE POSSIBILITY OF FINE AND IMPRISONMENT. SEE 18 USC § 1001 AND 33 USC § 1319. *(Penalties under these statutes may include fines up to $10,000 and or maximum imprisonment of between 6 months and 5 years.)*

SIGNATURE OF PRINCIPAL EXECUTIVE OFFICER OR AUTHORIZED AGENT

TELEPHONE: AREA CODE 317, NUMBER 973-7000

DATE: YEAR 93, MO 12

COMMENT AND EXPLANATION OF ANY VIOLATIONS *(Reference all attachments here)*

Facility Name/Location (if different)
NAME RICHMOND POWER & LIGHT
ADDRESS 2000 U.S. 27 SOUTH
RICHMOND IN 47374
FACILITY
LOCATION
ATTN: MR. ROBERT A. HART

DISCHARGE MONITORING REPORT (DMR)

(2-16) IN0055719 — PERMIT NUMBER
(17-19) 002 A — DISCHARGE NUMBER

MINOR
F - FINAL

Form Approved.
OMB No. 2040-0004
Approval expires 10-1-94

MONITORING PERIOD

	YEAR	MO	DAY		YEAR	MO	DAY
FROM	93	12	01	TO	93	12	31
	(20-21)	(22-23)	(24-25)		(26-27)	(28-29)	(30-31)

*** NO DISCHARGE [ ] ***
NOTE: Read instructions before completing this form.

PARAMETER (32-37)		QUANTITY OR LOADING (3 Card Only) (46-53) AVERAGE	(54-61) MAXIMUM	UNITS	QUALITY OR CONCENTRATION (4 Card Only) (38-45) MINIMUM	(46-53) AVERAGE	(54-61) MAXIMUM	UNITS	NO EX (62-63)	FREQUENCY OF ANALYSIS (64-65)	SAMPLE TYPE (66-70)
TEMPERATURE, WATER DEG. FAHRENHEIT 00011 1 0 0 EFFLUENT GROSS VALUE	SAMPLE MEASUREMENT	******	******		******	61.3	62.9	(15)	NA	02/07	Grab
	PERMIT REQUIREMENT	******	******	*****	******	REPORT MO AVG	REPORT DAILY MX	DEG.F		TWICE/WEEK	GRAB
PH 00400 1 0 0 EFFLUENT GROSS VALUE	SAMPLE MEASUREMENT	******	******		7.78	******	7.86	(12)	0	01/07	Grab
	PERMIT REQUIREMENT	******	******	*****	6.0 MINIMUM	******	9.0 MAXIMUM	SU		WEEKLY	GRAB
SOLIDS, TOTAL SUSPENDED 00530 1 0 0 EFFLUENT GROSS VALUE	SAMPLE MEASUREMENT	******	******		******	15.4	18	(19)	0	02/07	Grab
	PERMIT REQUIREMENT	******	******	*****	******	30.0 MO AVG	70.0 DAILY MX	MG/L		TWICE/WEEK	GRAB
OIL AND GREASE FREON EXTR-GRAV METH 00556 1 0 0 EFFLUENT GROSS VALUE	SAMPLE MEASUREMENT	******	******		******	<1.34	3.4	(19)	0	02/07	Grab
	PERMIT REQUIREMENT	******	******	*****	******	10.0 MO AVG	15.0 DAILY MX	MG/L		TWICE/WEEK	GRAB
NITROGEN, AMMONIA TOTAL (AS N) 00610 1 2 0 EFFLUENT GROSS VALUE	SAMPLE MEASUREMENT	******	******		******	0.042	0.074	(19)	0	02/31	Grab
	PERMIT REQUIREMENT	******	******	*****	******	1.62 MO AVG	2.60 DAILY MX	MG/L		TWICE/MONTH	GRAB
IRON TOTAL RECOVERABLE 01980 1 0 0 EFFLUENT GROSS VALUE	SAMPLE MEASUREMENT	******	******		******	0.28	0.36	(19)	NA	02/31	Grab
	PERMIT REQUIREMENT	******	******	*****	******	REPORT MO AVG	REPORT DAILY MX	MG/L		TWICE/MONTH	GRAB
ZINC TOTAL RECOVERABLE 01094 1 0 0 EFFLUENT GROSS VALUE	SAMPLE MEASUREMENT	******	******		******	0.04	0.05	(19)	0	02/31	Grab
	PERMIT REQUIREMENT	******	******	*****	******	0.20 MO AVG	0.46 DAILY MX	MG/L		TWICE/MONTH	GRAB

NAME/TITLE PRINCIPAL EXECUTIVE OFFICER

TYPED OR PRINTED

I CERTIFY UNDER PENALTY OF LAW THAT I HAVE PERSONALLY EXAMINED AND AM FAMILIAR WITH THE INFORMATION SUBMITTED HEREIN, AND BASED ON MY INQUIRY OF THOSE INDIVIDUALS IMMEDIATELY RESPONSIBLE FOR OBTAINING THE INFORMATION, I BELIEVE THE SUBMITTED INFORMATION IS TRUE, ACCURATE AND COMPLETE. I AM AWARE THAT THERE ARE SIGNIFICANT PENALTIES FOR SUBMITTING FALSE INFORMATION, INCLUDING THE POSSIBILITY OF FINE AND IMPRISONMENT. SEE 18 U.S.C. 1001 AND 33 U.S.C. § 1319. (Penalties under these statutes may include fines up to $10,000 and/or maximum imprisonment of between 6 months and 5 years.)

SIGNATURE OF PRINCIPAL EXECUTIVE OFFICER OR AUTHORIZED AGENT

TELEPHONE: AREA CODE 317, NUMBER 973-7000

DATE: YEAR 94, MONTH 1, DAY 17

COMMENT AND EXPLANATION OF ANY VIOLATIONS (Reference all attachments here)

RICHMOND

PE EEN ADDR
Facility Name/Location if different)
NAME RICHMOND POWER & LIGHT
ADDRESS 2000 U.S. 27 SOUTH
RICHMOND IN 47374

FACILITY
LOCATION
ATTN: MR. ROBERT . HART

DISCHARGE MONITORING REPORT (DMR)

(2-16)	(17-19)
IN0055719	001 A
PERMIT NUMBER	DISCHARGE NUMBER

MINOR

F - FINAL

Form Approved.
OMB No. 2040-0004
Approval expires 10-31-94

MONITORING PERIOD	YEAR	MO	DAY		YEAR	MO	DAY
FROM	93	12	01	TO	93	12	31
	(20-21)	(22-23)	(24-25)		(26-27)	(28-29)	(30-31)

*** NO DISCHARGE |__| ***

NOTE: Read instructions before completing this form.

PARAMETER (32-37)		(3 Card Only) (46-53) QUANTITY OR LOADING (54-61) AVERAGE	MAXIMUM	UNITS	(4 Card Only) (38-45) QUALITY OR CONCENTRATION (46-53) MINIMUM	AVERAGE	(54-61) MAXIMUM	UNITS	NO EX	FREQUENCY OF ANALYSIS	SAMPLE TYPE
ALUMINUM, TOTAL RECOVERABLE 01104 1 0 0 EFFLUENT GROSS VALUE	SAMPLE MEASUREMENT	*******	*******		*******	0.58	1.19	(19)	2	04/31	Grab
	PERMIT REQUIREMENT	******	******	*****	******	0.17 MO AVG	0.40 DAILY MX	MG/L		TWICE/MONTH	GRAB
LEAD TOTAL RECOVERABLE 01114 1 0 0 EFFLUENT GROSS VALUE	SAMPLE MEASUREMENT	******	******		*******	0.002	0.003	(19)	0	02/31	Grab
	PERMIT REQUIREMENT	******	******	*****	******	0.01 MO AVG	0.02 DAILY MX	MG/L		TWICE/MONTH	GRAB
COPPER TOTAL RECOVERABLE 01119 1 0 0 EFFLUENT GROSS VALUE	SAMPLE MEASUREMENT	******	******		******	0.02	0.03	(19)	0	02/31	Grab
	PERMIT REQUIREMENT	******	******	*****	******	0.02 MO AVG	0.05 DAILY MX	MG/L		TWICE/MONTH	GRAB
OXIDANTS, TOTAL RESIDUAL 34044 1 0 0 EFFLUENT GROSS VALUE	SAMPLE MEASUREMENT	******	******		******	<0.05	<0.05	(19)	0	02/07	Grab
	PERMIT REQUIREMENT	******	******	*****	******	0.05 MO AVG	0.05 DAILY MX	MG/L		TWICE/WEEK	GRAB
FLOW, IN CONDUIT OR THRU TREATMENT PLANT 50050 1 0 0 EFFLUENT GROSS VALUE	SAMPLE MEASUREMENT	0.5480	0.6097	(3)					NA	03/07	Instan
	PERMIT REQUIREMENT	REPORT MO AVG	REPORT DAILY MX	MGD	******	******	******	*****		THRE/WEEK	INSTAN
	SAMPLE MEASUREMENT										
	PERMIT REQUIREMENT										
	SAMPLE MEASUREMENT										
	PERMIT REQUIREMENT										

NAME/TITLE PRINCIPAL EXECUTIVE OFFICER

TYPED OR PRINTED

I CERTIFY UNDER PENALTY OF LAW THAT I HAVE PERSONALLY EXAMINED AND AM FAMILIAR WITH THE INFORMATION SUBMITTED HEREIN AND BASED ON MY INQUIRY OF THOSE INDIVIDUALS IMMEDIATELY RESPONSIBLE FOR OBTAINING THE INFORMATION. I BELIEVE THE SUBMITTED INFORMATION IS TRUE, ACCURATE AND COMPLETE. I AM AWARE THAT THERE ARE SIGNIFICANT PENALTIES FOR SUBMITTING FALSE INFORMATION, INCLUDING THE POSSIBILITY OF FINE AND IMPRISONMENT. SEE 18 U.S.C. § 1001 AND 33 U.S.C. § 1319 (*Penalties under these statutes may include fines up to $10,000 and or maximum imprisonment of between 6 months and 5 years.*)

SIGNATURE OF PRINCIPAL EXECUTIVE OFFICER OR AUTHORIZED AGENT

TELEPHONE		DATE		
317	973-7000	94	1	17
AREA CODE	NUMBER	YEAR	MO	DAY

COMMENT AND EXPLANATION OF ANY VIOLATIONS (*Reference all attachments here*)

Facility Name/Location (if different)

NAME [illegible]

ADDRESS [illegible]

[illegible] 47274

FACILITY

LOCATION

ATTN: MR. [illegible]

PERMIT NUMBER

Form Approved
OMB No. 2040-0004
Approval expires 6/30/91

MONITORING PERIOD

FROM YEAR	MO	DAY	TO YEAR	MO	DAY
[illegible]	[illegible]	[illegible]	[illegible]	[illegible]	[illegible]

NOTE: Read instructions before completing this form.

PARAMETER (32-37)		(3 Card Only) (46-53) QUANTITY OR LOADING (54-61) AVERAGE	MAXIMUM	UNITS	(1 Card Only) (46-53) QUALITY OR CONCENTRATION (54-61) MINIMUM	AVERAGE	MAXIMUM	UNITS	No. Ex.	Freq. Anal.	Sample Type
TEMPERATURE, WATER DEG. FAHRENHEIT 00011 1 C 6 EFFLUENT GROSS VALUE	SAMPLE MEASUREMENT	*******	*******			59.5	60.6	(35)	NA	02/07	Grab
	PERMIT REQUIREMENT	*******	*******		*******	REPORT NO AVG	REPORT DAILY MX	DEG.F		TWICE/WEEK	GRAB
pH 00400 1 [illegible] EFFLUENT GROSS VALUE	SAMPLE MEASUREMENT	*******	*******		7.43	*******	7.72	(12)	0	01/[illegible]	
	PERMIT REQUIREMENT	*******	*******		6.0 MINIMUM	*******	9.0 MAXIMUM	SU		[illegible]	
SOLIDS, TOTAL SUSPENDED 00530 1 [illegible] EFFLUENT GROSS VALUE	SAMPLE MEASUREMENT	*******	*******			16.9	44	(19)	[illegible]	[illegible]	
	PERMIT REQUIREMENT	*******	*******			30.0 NO AVG	70.0 DAILY MX	MG/L		[illegible]	
OIL AND GREASE HEXAN EXTR-GRAV 00556 1 [illegible] EFFLUENT GROSS VALUE	SAMPLE MEASUREMENT	*******	*******			<1.4	2.7	(19)	0	02/07	Grab
	PERMIT REQUIREMENT	*******	*******		*******	10.0 NO AVG	15.0 DAILY MX	MG/L		TWICE/WEEK	GRAB
NITROGEN, AMMONIA TOTAL (AS N) 00610 1 2 [illegible] EFFLUENT GROSS VALUE	SAMPLE MEASUREMENT	*******	*******			0.25	0.396	(19)	0	02/07	Grab
	PERMIT REQUIREMENT	*******	*******		*******	1.62 NO AVG	2.60 DAILY MX	MG/L		TWICE/MONTH	GRAB
IRON TOTAL RECOVERABLE 00980 1 0 0 EFFLUENT GROSS VALUE	SAMPLE MEASUREMENT	*******	*******			0.606	0.634	(19)	NA	02/31	Grab
	PERMIT REQUIREMENT	*******	*******		*******	REPORT NO AVG	REPORT DAILY MX	MG/L		TWICE/MONTH	GRAB
ZINC TOTAL RECOVERABLE 01094 1 0 [illegible] EFFLUENT GROSS VALUE	SAMPLE MEASUREMENT	*******	*******			0.060	0.067	(19)	0	02/31	Grab
	PERMIT REQUIREMENT	*******	*******		*******	0.20 NO AVG	0.46 DAILY MX	MG/L		TWICE/MONTH	[illegible]

NAME/TITLE PRINCIPAL EXECUTIVE OFFICER

TYPED OR PRINTED

I CERTIFY UNDER PENALTY OF LAW THAT I HAVE PERSONALLY EXAMINED AND AM FAMILIAR WITH THE INFORMATION SUBMITTED HEREIN AND BASED ON MY INQUIRY OF THOSE INDIVIDUALS IMMEDIATELY RESPONSIBLE FOR OBTAINING THE INFORMATION I BELIEVE THE SUBMITTED INFORMATION IS TRUE, ACCURATE AND COMPLETE. I AM AWARE THAT THERE ARE SIGNIFICANT PENALTIES FOR SUBMITTING FALSE INFORMATION, INCLUDING THE POSSIBILITY OF FINE AND IMPRISONMENT. SEE 18 USC 1001 AND 33 USC 1319. (Penalties under these statutes may include fines up to $10,000 and/or maximum imprisonment of between 6 months and 5 years.)

SIGNATURE OF PRINCIPAL EXECUTIVE OFFICER OR AUTHORIZED AGENT

TELEPHONE

AREA CODE 317 NUMBER 973-7[illegible]

COMMENT AND EXPLANATION OF ANY VIOLATIONS (Reference all attachments here)

Facility Name/Location (if different)

NAME [illegible]

ADDRESS 2[illegible] [illegible] 7 [illegible]

[illegible] IN 47374

FACILITY

LOCATION

DISCHARGE MONITORING REPORT (DMR)

PERMIT NUMBER [illegible]

DISCHARGE NUMBER [illegible]

Form Approved
OMB No. 2040-0004
Approval expires 6-30-91

MONITORING PERIOD

FROM YEAR	MO	DAY	TO YEAR	MO	DAY
[illegible]	[illegible]	[illegible]	[illegible]	[illegible]	[illegible]

NOTE: Read instructions before completing this form.

PARAMETER (32-37)		(3 Card Only) QUANTITY OR LOADING (46-53) AVERAGE	(54-61) MAXIMUM	UNITS	(3 Card Only) QUALITY OR CONCENTRATION (38-45) MINIMUM	(46-53) AVERAGE	(54-61) MAXIMUM	UNITS	NO. EX.	FREQUENCY OF ANALYSIS	SAMPLE TYPE
ALUMINUM, TOTAL RECOVERABLE 01104 1 0 0 EFFLUENT GROSS VALUE	SAMPLE MEASUREMENT	******	******			<0.003	<0.003	(19)	0	03/31	[illegible]
	PERMIT REQUIREMENT	******	******	****	******	0.17 MO AVG	0.40 DAILY MX	MG/L		TWICE/MONTH	GRAB
LEAD TOTAL RECOVERABLE 01114 1 0 0 EFFLUENT GROSS VALUE	SAMPLE MEASUREMENT	******	******			0.004	0.004	(19)	0	04/31	[illegible]
	PERMIT REQUIREMENT	******	******	****	******	0.01 MO AVG	0.02 DAILY MX	MG/L		TWICE/[illegible]	[illegible]
COPPER TOTAL RECOVERABLE 01119 [illegible] EFFLUENT GROSS VALUE	SAMPLE MEASUREMENT	******	******			0.028	0.031	(19)	1	04/[illegible]	
	PERMIT REQUIREMENT	******	******	****	******	[illegible] MO AVG	[illegible] DAILY MX	MG/L			
OXIDANTS, TOTAL RESIDUAL 34044 1 0 0 EFFLUENT GROSS VALUE	SAMPLE MEASUREMENT	******	******			<0.05	<0.05	(19)	0	03/07	[illegible]
	PERMIT REQUIREMENT	******	******	****	******	0.05 MO AVG	0.05 DAILY MX	MG/L		THICE/[illegible] WEEK	
FLOW, IN CONDUIT OR THRU TREATMENT PLANT 50050 1 0 0 EFFLUENT GROSS VALUE	SAMPLE MEASUREMENT	0.5605	0.8206	(03)	******	******	******		NA	03/07	INSTAN
	PERMIT REQUIREMENT	REPORT MO AVG	REPORT DAILY MX	MGD	******	******	******	****		THREE/WEEK	INSTAN
	SAMPLE MEASUREMENT										
	PERMIT REQUIREMENT										
	SAMPLE MEASUREMENT										
	PERMIT REQUIREMENT										

NAME/TITLE PRINCIPAL EXECUTIVE OFFICER

TYPED OR PRINTED

I CERTIFY UNDER PENALTY OF LAW THAT I HAVE PERSONALLY EXAMINED AND AM FAMILIAR WITH THE INFORMATION SUBMITTED HEREIN AND BASED ON MY INQUIRY OF THOSE INDIVIDUALS IMMEDIATELY RESPONSIBLE FOR OBTAINING THE INFORMATION I BELIEVE THE SUBMITTED INFORMATION IS TRUE ACCURATE AND COMPLETE I AM AWARE THAT THERE ARE SIGNIFICANT PENALTIES FOR SUBMITTING FALSE INFORMATION INCLUDING THE POSSIBILITY OF FINE AND IMPRISONMENT SEE 18 USC § 1001 AND 33 USC § 1319 (Penalties under these statutes may include fines up to $10,000 and or maximum imprisonment of between 6 months and 5 years)

SIGNATURE OF PRINCIPAL EXECUTIVE OFFICER OR AUTHORIZED AGENT

TELEPHONE

AREA CODE 317 NUMBER 973 [illegible]

COMMENT AND EXPLANATION OF ANY VIOLATIONS (Reference all attachments here)

(MIT AME ESS
Facility Name/Location (if different)
NAME RICHMOND POWER & LIGHT
ADDRESS 2000 U.S. 27 SOUTH
RICHMOND IN 47374

FACILITY
LOCATION
ATTN: MR. ROBERT A. HART

NATIC OLLU DISC ELIN ON SY (NPDE

DISCHARGE MONITORING REPORT (DMR)

(2-16) IN0055719 PERMIT NUMBER

(17-19) 001 A DISCHARGE NUMBER

MINOR

F - FINAL

Form Approved.
OMB No. 2040-0004.
Approval expires 6-30-91.

MONITORING PERIOD	YEAR	MO	DAY		YEAR	MO	DAY
FROM	94	02	01	TO	94	02	26
	(20-21)	(22-23)	(24-25)		(26-27)	(28-29)	(30-31)

*** NO DISCHARGE |__| ***

NOTE: Read instructions before completing this form.

PARAMETER (32-37)		(3 Card Only) QUANTITY OR LOADING (46-53) AVERAGE	(54-61) MAXIMUM	UNITS	(4 Card Only) QUALITY OR CONCENTRATION (38-45) MINIMUM	(46-53) AVERAGE	(54-61) MAXIMUM	UNITS	NO. EX (62-63)	FREQUENCY OF ANALYSIS (64-68)	SAMPLE TYPE (69-70)
TEMPERATURE, WATER DEG. FAHRENHEIT 00011 1 0 0 EFFLUENT GROSS VALUE	SAMPLE MEASUREMENT	******	******		******	60.3	63.5	(15) DEG.F	NA	02/07	Grab
	PERMIT REQUIREMENT	******	******	*** ****	******	REPORT MO AVG	REPORT DAILY MX			TWICE/WEEK	GRAB
PH 00400 1 0 0 EFFLUENT GROSS VALUE	SAMPLE MEASUREMENT	******	******		7.61	******	7.75	(12) SU	0	01/07	Grab
	PERMIT REQUIREMENT			*** ****	6.0 MINIMUM	******	9.0 MAXIMUM			WEEKLY	GRAB
SOLIDS, TOTAL SUSPENDED 00530 1 0 0 EFFLUENT GROSS VALUE	SAMPLE MEASUREMENT	******	******		******	11.6	16	(19) MG/L	0	02/07	Grab
	PERMIT REQUIREMENT			*** ****	******	30.0 MO AVG	70.0 DAILY MX			TWICE/WEEK	GRAB
OIL AND GREASE FREON EXTR-GRAV METH 00556 1 0 0 EFFLUENT GROSS VALUE	SAMPLE MEASUREMENT	******	******		******	<1.09	1.4	(19) MG/L	0	02/07	Grab
	PERMIT REQUIREMENT			*** ****	******	10.0 MO AVG	15.0 DAILY MX			TWICE/WEEK	GRAB
NITROGEN, AMMONIA TOTAL (AS N) 00610 1 2 0 EFFLUENT GROSS VALUE	SAMPLE MEASUREMENT	******	******		******	0.183	0.204	(19) MG/L	0	02/28	Grab
	PERMIT REQUIREMENT			*** ****	******	1.62 MO AVG	2.60 DAILY MX			TWICE/MONTH	GRAB
IRON TOTAL RECOVERABLE 00980 1 0 0 EFFLUENT GROSS VALUE	SAMPLE MEASUREMENT	******	******		******	0.566	0.639	(19) MG/L	NA	02/28	Grab
	PERMIT REQUIREMENT			*** ****	******	REPORT MO AVG	REPORT DAILY MX			TWICE/MONTH	GRAB
ZINC TOTAL RECOVERABLE 01094 1 0 0 EFFLUENT GROSS VALUE	SAMPLE MEASUREMENT	******	******		******	0.112	0.138	(19) MG/L	0	02/28	Grab
	PERMIT REQUIREMENT			*** ****	******	0.20 MO AVG	0.46 DAILY MX			TWICE/MONTH	GRAB

NAME/TITLE PRINCIPAL EXECUTIVE OFFICER

TYPED OR PRINTED

I CERTIFY UNDER PENALTY OF LAW THAT I HAVE PERSONALLY EXAMINED AND AM FAMILIAR WITH THE INFORMATION SUBMITTED HEREIN, AND BASED ON MY INQUIRY OF THOSE INDIVIDUALS IMMEDIATELY RESPONSIBLE FOR OBTAINING THE INFORMATION, I BELIEVE THE SUBMITTED INFORMATION IS TRUE, ACCURATE AND COMPLETE. I AM AWARE THAT THERE ARE SIGNIFICANT PENALTIES FOR SUBMITTING FALSE INFORMATION, INCLUDING THE POSSIBILITY OF FINE AND IMPRISONMENT. SEE 18 USC § 1001 AND 33 USC § 1319. *(Penalties under these statutes may include fines up to $10,000 and a maximum imprisonment of between 6 months and 5 years.)*

SIGNATURE OF PRINCIPAL EXECUTIVE OFFICER OR AUTHORIZED AGENT

TELEPHONE		DATE		
317	973-7200	94	3	2
AREA CODE	NUMBER	YEAR	MO	DA

COMMENT AND EXPLANATION OF ANY VIOLATIONS *(Reference all attachments here)*

PERMITTEE NAME/ADDRESS (Include Facility Name/Location if different)

NAME RICHMOND POWER & LIGHT

ADDRESS 2000 U.S. 27 SOUTH

RICHMOND IN 47374

FACILITY

LOCATION

ATTN: MR. ROBERT A. HART

NATIONAL POLLUTANT DISCHARGE ELIMINATION SYSTEM (NPDES)

DISCHARGE MONITORING REPORT (DMR)

(2-16) PERMIT NUMBER: IN0055719

(17-19) DISCHARGE NUMBER: 001 A

MINOR

F - FINAL

Form Approved. OMB No. 2040-0004. Approval expires 6-30-91.

MONITORING PERIOD

FROM YEAR	MO	DAY	TO YEAR	MO	DAY
94	02	01	94	02	28
(20-21)	(22-23)	(24-25)	(26-27)	(28-29)	(30-31)

*** NO DISCHARGE |__| ***

NOTE: Read instructions before completing this form.

PARAMETER (32-37)		(3 Card Only) QUANTITY OR LOADING (46-53) AVERAGE	(54-61) MAXIMUM	UNITS	(4 Card Only) QUALITY OR CONCENTRATION (38-45) MINIMUM	(46-53) AVERAGE	(54-61) MAXIMUM	UNITS	NO. EX (62-63)	FREQUENCY OF ANALYSIS (64-68)	SAMP TYP (69
ALUMINUM, TOTAL RECOVERABLE 01104 1 C 0 EFFLUENT GROSS VALUE	SAMPLE MEASUREMENT	******	******		******	1.243	1.697	(19)	2	04/28	Gra
	PERMIT REQUIREMENT			*** ****		0.17 MO AVG	0.40 DAILY MX	MG/L		TWICE/MONTH	GRAB
LEAD TOTAL RECOVERABLE 01114 1 0 0 EFFLUENT GROSS VALUE	SAMPLE MEASUREMENT	******	******		******	0.004	0.005	(19)	0	02/28	Gra
	PERMIT REQUIREMENT			*** ****	******	0.01 MO AVG	0.02 DAILY MX	MG/L		TWICE/MONTH	GRAB
COPPER TOTAL RECOVERABLE 01119 1 0 0 EFFLUENT GROSS VALUE	SAMPLE MEASUREMENT	******	******		******	0.026	0.031	(19)	1	04/28	Gra
	PERMIT REQUIREMENT			*** ****	******	0.02 MO AVG	0.05 DAILY MX	MG/L		TWICE/MONTH	GRAB
OXIDANTS, TOTAL RESIDUAL 34044 1 0 0 EFFLUENT GROSS VALUE	SAMPLE MEASUREMENT	******	******		******	<0.05	<0.05	(19)	0	02/07	Gra
	PERMIT REQUIREMENT			*** ****	******	0.05 MO AVG	0.05 DAILY MX	MG/L		TWICE/WEEK	GRAB
FLOW, IN CONDUIT OR THRU TREATMENT PLANT 50050 1 0 0 EFFLUENT GROSS VALUE	SAMPLE MEASUREMENT	0.5367	0.5729	(03)	******	******	******		NA	03/07	INST
	PERMIT REQUIREMENT	MO AVG	DAILY MX	MGD	******	******	******	*** ****		THREE/WEEK	INST
	SAMPLE MEASUREMENT										
	PERMIT REQUIREMENT										
	SAMPLE MEASUREMENT										
	PERMIT REQUIREMENT										

NAME/TITLE PRINCIPAL EXECUTIVE OFFICER

TYPED OR PRINTED

I CERTIFY UNDER PENALTY OF LAW THAT I HAVE PERSONALLY EXAMINED AND AM FAMILIAR WITH THE INFORMATION SUBMITTED HEREIN AND BASED ON MY INQUIRY OF THOSE INDIVIDUALS IMMEDIATELY RESPONSIBLE FOR OBTAINING THE INFORMATION, I BELIEVE THE SUBMITTED INFORMATION IS TRUE, ACCURATE AND COMPLETE. I AM AWARE THAT THERE ARE SIGNIFICANT PENALTIES FOR SUBMITTING FALSE INFORMATION, INCLUDING THE POSSIBILITY OF FINE AND IMPRISONMENT. SEE 18 USC § 1001 AND 33 USC § 1319. *(Penalties under these statutes may include fines up to $10,000 and/or maximum imprisonment of between 6 months and 5 years.)*

SIGNATURE OF PRINCIPAL EXECUTIVE OFFICER OR AUTHORIZED AGENT

TELEPHONE: AREA CODE 317, NUMBER 973-7200

DATE: YEAR 94, MO 3, D 2

COMMENT AND EXPLANATION OF ANY VIOLATIONS (*Reference all attachments here*)

PERMITTEE NAME/ADDRESS (Name, location if different)

NAME: RICH CND POWER & LIGHT

ADDRESS: 20[illegible] E.S. 27 SOUTH

RICHMOND IN 47374

FACILITY

LOCATION

TITLE: DR. ROBERT A. HART

NATIONAL POLLUTANT DISCHARGE ELIMINATION SYSTEM (NPDES) MONITORING REPORT (MR)

PERMIT NUMBER (2-16): IN0055719

DISCHARGE NUMBER (17-19): 001 A

MINOR

F - FINAL

Form Approved. OMB No. 2040-0004. Approval expires 6-30-91.

MONITORING PERIOD

	YEAR	MO	DAY		YEAR	MO	DAY
FROM	94	03	01	TO	94	03	31
	(20-21)	(22-23)	(24-25)		(26-27)	(28-29)	(30-31)

*** NO DISCHARGE [ ] ***

NOTE: Read instructions before completing this form.

PARAMETER (32-37)		(3 Card Only) (46-53) QUANTITY OR LOADING (54-61) AVERAGE	MAXIMUM	UNITS	(4 Card Only) (38-45) QUALITY OR CONCENTRATION (46-53) MINIMUM	(54-61) AVERAGE	MAXIMUM	UNITS	NO EX (62-63)	FREQUENCY OF ANALYSIS (64-68)	SAMPLE TYPE (69-70)
ALUMINUM, TOTAL RECOVERABLE 01104 1 0 0 EFFLUENT GROSS VALUE	SAMPLE MEASUREMENT	******	******		******	0.834	0.920	(19)	2	04/31	Grab
	PERMIT REQUIREMENT	******	******	**** ****	******	0.17 MO AVG	0.40 DAILY MX	MG/L		TWICE/MONTH	GRAB
LEAD TOTAL RECOVERABLE 01114 1 0 0 EFFLUENT GROSS VALUE	SAMPLE MEASUREMENT	******	******		******	0.008	0.009	(19)	0	04/31	Grab
	PERMIT REQUIREMENT	******	******	**** ****	******	0.01 MO AVG	0.02 DAILY MX	MG/L		TWICE/MONTH	GRAB
COPPER TOTAL RECOVERABLE 01119 1 0 0 EFFLUENT GROSS VALUE	SAMPLE MEASUREMENT	******	******		******	0.03	0.035	(19)	1	04/31	Grab
	PERMIT REQUIREMENT	******	******	**** ****	******	0.02 MO AVG	0.05 DAILY MX	MG/L		TWICE/MONTH	GRAB
CHLORINE, TOTAL RESIDUAL 50060 1 0 0 EFFLUENT GROSS VALUE	SAMPLE MEASUREMENT	******	******		******	<0.05	<0.05	(19)	0	02/07	Grab
	PERMIT REQUIREMENT	******	******	**** ****	******	0.05 MO AVG	0.05 DAILY MX	MG/L		TWICE/WEEK	GRAB
FLOW, IN CONDUIT OR THE TREATMENT PLANT 50050 1 0 0 EFFLUENT GROSS VALUE	SAMPLE MEASUREMENT	0.5701	0.8603	(03)	******	******	******		NA	03/07	Instan
	PERMIT REQUIREMENT	REPORT MO AVG	REPORT DAILY MX	MGD	******	******	******	**** ****		THREE/WEEK	INSTAN
	SAMPLE MEASUREMENT										
	PERMIT REQUIREMENT										
	SAMPLE MEASUREMENT										
	PERMIT REQUIREMENT										

NAME/TITLE PRINCIPAL EXECUTIVE OFFICER

TYPED OR PRINTED

I CERTIFY UNDER PENALTY OF LAW THAT I HAVE PERSONALLY EXAMINED AND AM FAMILIAR WITH THE INFORMATION SUBMITTED HEREIN AND BASED ON MY INQUIRY OF THOSE INDIVIDUALS IMMEDIATELY RESPONSIBLE FOR OBTAINING THE INFORMATION I BELIEVE THE SUBMITTED INFORMATION IS TRUE ACCURATE AND COMPLETE I AM AWARE THAT THERE ARE SIGNIFICANT PENALTIES FOR SUBMITTING FALSE INFORMATION INCLUDING THE POSSIBILITY OF FINE AND IMPRISONMENT SEE 18 U.S.C. § 1001 AND 33 U.S.C. § 1319 (Penalties under these statutes may include fines up to $10,000 and or maximum imprisonment of between 6 months and 5 years)

SIGNATURE OF PRINCIPAL EXECUTIVE OFFICER OR AUTHORIZED AGENT

TELEPHONE: AREA CODE 317, NUMBER 973-7200

DATE: YEAR 94, MO 4, DAY 26

COMMENT AND EXPLANATION OF ANY VIOLATIONS (Reference all attachments here)

Facility Name/Location if different)

NAME [illegible] SOUTH

ADDRESS [illegible] 7 SOUTH

RICHMOND IN 47374

FACILITY

LOCATION

ATTN: MR. ROBERT A. HART

DISCHARGE MONITORING REPORT (DMR)

(2-16) IN0055719 PERMIT NUMBER

(17-19) [illegible] DISCHARGE NUMBER

Form Approved.
OMB No. 2040-0004
FINAL Approval expires 6-30-91

MONITORING PERIOD

	YEAR	MO	DAY		YEAR	MO	DAY
FROM	94	03	01	TO	94	03	31
	(20-21)	(22-23)	(24-25)		(26-27)	(28-29)	(30-31)

*** NO DISCHARGE [ ] ***

NOTE: Read instructions before completing this form

PARAMETER (32-37)		(1 Card Only) QUANTITY OR LOADING (46-53) AVERAGE	(54-61) MAXIMUM	UNITS	(4 Card Only) QUALITY OR CONCENTRATION (38-45) MINIMUM	(46-53) AVERAGE	(54-61) MAXIMUM	UNITS	NO EX (62-63)	FREQUENCY OF ANALYSIS (64-68)	SAMPLE TYPE (69-70)
[illegible] EFFLUENT GROSS VALUE	SAMPLE MEASUREMENT					64.2	68.9	(15)	NA	03/07	Grab
	PERMIT REQUIREMENT	******	******	****	******	REPORT MO AVG	REPORT DAILY MX	DEG.F		TWICE/WEEK	GRAB
pH EFFLUENT GROSS VALUE	SAMPLE MEASUREMENT	******	******		7.42	******	8.54	(12)	0	01/07	Grab
	PERMIT REQUIREMENT	******	******	****	6.0 MINIMUM	******	9.0 MAXIMUM	SU		WEEKLY	GRAB
SOLIDS, TOTAL SUSPENDED EFFLUENT GROSS VALUE	SAMPLE MEASUREMENT	******	******		******	9.4	13	(19)	0	03/07	Grab
	PERMIT REQUIREMENT	******	******	****	******	30.0 MO AVG	70.0 DAILY MX	MG/L		TWICE/WEEK	GRAB
OIL AND GREASE EFFLUENT GROSS VALUE	SAMPLE MEASUREMENT	******	******		******	2.31	5.3	(19)	0	03/07	Grab
	PERMIT REQUIREMENT	******	******	****	******	10.0 MO AVG	15.0 DAILY MX	MG/L		TWICE/WEEK	GRAB
NITROGEN, AMMONIA TOTAL (AS N) EFFLUENT GROSS VALUE	SAMPLE MEASUREMENT	******	******		******	0.14	0.158	(19)	0	03/31	Grab
	PERMIT REQUIREMENT	******	******	****	******	1.62 MO AVG	2.60 DAILY MX	MG/L		TWICE/MONTH	GRAB
[illegible] TOTAL RECOVERABLE EFFLUENT GROSS VALUE	SAMPLE MEASUREMENT	******	******		******	0.438	0.487	(19)	NA	03/31	Grab
	PERMIT REQUIREMENT	******	******	****	******	REPORT MO AVG	REPORT DAILY MX	MG/L		TWICE/MONTH	GRAB
[illegible] TOTAL RECOVERABLE EFFLUENT GROSS VALUE	SAMPLE MEASUREMENT	******	******		******	0.106	0.112	(19)	0	03/31	Grab
	PERMIT REQUIREMENT	******	******	****	******	0.20 MO AVG	0.46 DAILY MX	MG/L		TWICE/MONTH	GRAB

NAME/TITLE PRINCIPAL EXECUTIVE OFFICER

TYPED OR PRINTED

I CERTIFY UNDER PENALTY OF LAW THAT I HAVE PERSONALLY EXAMINED AND AM FAMILIAR WITH THE INFORMATION SUBMITTED HEREIN AND BASED ON MY INQUIRY OF THOSE INDIVIDUALS IMMEDIATELY RESPONSIBLE FOR OBTAINING THE INFORMATION I BELIEVE THE SUBMITTED INFORMATION IS TRUE ACCURATE AND COMPLETE I AM AWARE THAT THERE ARE SIGNIFICANT PENALTIES FOR SUBMITTING FALSE INFORMATION INCLUDING THE POSSIBILITY OF FINE AND IMPRISONMENT SEE 18 USC § 1001 AND 33 USC § 1319 (Penalties under these statutes may include fines up to $10,000 and/or maximum imprisonment of between 6 months and 5 years)

SIGNATURE OF PRINCIPAL EXECUTIVE OFFICER OR AUTHORIZED AGENT

TELEPHONE: AREA CODE 317 NUMBER 973-7200

DATE: YEAR 94 MO 4 DAY 26

COMMENT AND EXPLANATION OF ANY VIOLATIONS (Reference all attachments here)

PERMITTEE NAME/ADDRESS (Include Facility name/Location if different)

NAME RICHMOND POWER & LIGHT

ADDRESS 2000 U.S. 27 SOUTH

RICHMOND IN 47374

FACILITY

LOCATION

ATTN: MR. ROBERT A. HART

NATIONAL POLLUTANT DISCHARGE ELIMINATION SYSTEM (NPDES)

DISCHARGE MONITORING REPORT (DMR)

(2-16) IN0055719 — PERMIT NUMBER

(17-19) 001 A — DISCHARGE NUMBER

MINOR

F - FINAL

Form Approved. OMB No. 2040-0004. Approval expires 6-30-91.

MONITORING PERIOD

	YEAR	MO	DAY		YEAR	MO	DAY
FROM	94	04	01	TO	94	04	30
	(20-21)	(22-23)	(24-25)		(25-27)	(28-29)	(30-31)

*** NO DISCHARGE [ ] ***

NOTE: Read instructions before completing this form.

PARAMETER (32-37)		(3 Card Only) (46-53) QUANTITY OR LOADING (54-61) AVERAGE	MAXIMUM	UNITS	(4 Card Only) (38-45) QUALITY OR CONCENTRATION (46-53) MINIMUM	(54-61) AVERAGE	MAXIMUM	UNITS	NO. EX (62-67)	FREQUENCY OF ANALYSIS (64-68)	SAMPLE TYPE (69)
TEMPERATURE, WATER DEG. FAHRENHEIT 00011 1 0 0 EFFLUENT GROSS VALUE	SAMPLE MEASUREMENT	******	******	**** ****	******	66.2	77.8	(15) DEG. F	NA	02/07	
PH 00400 1 0 0 EFFLUENT GROSS VALUE	SAMPLE MEASUREMENT	******	******	**** ****	7.28	******	7.83	(12) SU	0	01/07	Gra
SOLIDS, TOTAL SUSPENDED 00530 1 0 0 EFFLUENT GROSS VALUE	SAMPLE MEASUREMENT	******	******	**** ****	******	14.8	19	(19) MG/L	0	02/07	Gra
OIL AND GREASE, FREON EXTR-GRAV-METH 00556 1 0 0 EFFLUENT GROSS VALUE	SAMPLE MEASUREMENT	******	******	**** ****	******	1.78	2.9	(19) MG/L	0	02/07	Gra
NITROGEN AMMONIA TOTAL (AS N) 00610 1 0 0 EFFLUENT GROSS VALUE	SAMPLE MEASUREMENT	******	******	**** ****	******	0.164	0.182	(19) MG/L	0	02/30	Gra
IRON TOTAL RECOVERABLE 00980 1 0 0 EFFLUENT GROSS VALUE	SAMPLE MEASUREMENT	******	******	**** ****	******	1.84	2.85	(19) MG/L	NA	02/30	Gra
ZINC TOTAL RECOVERABLE 01094 1 0 0 EFFLUENT GROSS VALUE	SAMPLE MEASUREMENT	******	******	**** ****	******	0.086	0.096	(19) MG/L	0	02/30	Gra

NAME/TITLE PRINCIPAL EXECUTIVE OFFICER

TYPED OR PRINTED

I CERTIFY UNDER PENALTY OF LAW THAT I HAVE PERSONALLY EXAMINED AND AM FAMILIAR WITH THE INFORMATION SUBMITTED HEREIN; AND BASED ON MY INQUIRY OF those INDIVIDUALS IMMEDIATELY RESPONSIBLE FOR OBTAINING THE INFORMATION, I BELIEVE THE SUBMITTED INFORMATION IS TRUE, ACCURATE, AND COMPLETE. I AM AWARE THAT THERE ARE SIGNIFICANT PENALTIES FOR SUBMITTING FALSE INFORMATION, INCLUDING THE POSSIBILITY OF FINE AND IMPRISONMENT. (SEE 18 U.S.C. § 1001 AND 33 U.S.C. § 1319. (Possible civil penalties may include fines up to $10,000 and or maximum imprisonment of between 6 months and 5 years.)

SIGNATURE OF PRINCIPAL EXECUTIVE OFFICER OR AUTHORIZED AGENT

TELEPHONE: AREA CODE 317, NUMBER 973-7200

DATE: YEAR 94, MO 5

COMMENT AND EXPLANATION OF ANY VIOLATIONS (Reference all attachments here)

TOTAL P.11

EPA Form 3320-1 (Rev. 9-88) Previous editions may be used

NAME [illegible] 90 [illegible] LIGHT
ADDRESS 2000 GAS 27 SOUTH
RICHMOND IN 47374

FACILITY
LOCATION
ATTN: MR. ROBERT A. HART

SCH EMI ORR EPOI MRI
(2-16) IN0055719 PERMIT NUMBER
(17-19) 001 A DISCHARGE NUMBER

MINOR
F - FINAL

Form Approved.
OMB No. 2040-0004.
Approval expires 6-30-91.

MONITORING PERIOD	YEAR	MO	DAY		YEAR	MO	DAY
FROM	94	04	01	TO	94	04	30
	(20-21)	(22-23)	(24-25)		(26-27)	(28-29)	(30-31)

*** NO DISCHARGE ***
NOTE: Read instructions before completing this form.

PARAMETER (32-37)		(3 Card Only) QUANTITY OR LOADING (46-53) AVERAGE	(54-61) MAXIMUM	UNITS	(4 Card Only) QUALITY OR CONCENTRATION (38-45) MINIMUM	(46-53) AVERAGE	(54-61) MAXIMUM	UNITS	NO. EX. (62-63)	FREQUENCY OF ANALYSIS (64-68)	SAMPLE TYPE (69-70)
ALUMINUM, TOTAL RECOVERABLE 01106 1 C 0 EFFLUENT GROSS VALU	SAMPLE MEASUREMENT	******	******	**** ****	******	1.44	2.30	(19) MG/L	2	02/30	Gra
LEAD TOTAL RECOVERABLE 01114 1 C 0 EFFLUENT GROSS VALU	SAMPLE MEASUREMENT	******	******	**** ****	******	0.004	0.004	(19) MG/L	0	02/30	Gra
COPPER TOTAL RECOVERABLE 01119 1 0 0 EFFLUENT GROSS VALU	SAMPLE MEASUREMENT	******	******	**** ****	******	0.015	0.015	(19) MG/L	0	02/30	Gra
OXIDANTS, TOTAL RESIDUAL 38044 1 0 0 EFFLUENT GROSS VALU	SAMPLE MEASUREMENT	******	******	**** ****	******	<0.05	<0.05	(19) MG/L	0	02/07	Gra
FLOW, IN CONDUIT OR THRU TREATMENT PLAN 50050 1 0 0 EFFLUENT GROSS VALU	SAMPLE MEASUREMENT	0.5645	1.063	(03) MGD	******	******	******	**** ****	09	03/07	Inst
	SAMPLE MEASUREMENT										
	SAMPLE MEASUREMENT										

NAME/TITLE PRINCIPAL EXECUTIVE OFFICER

TYPED OR PRINTED

I CERTIFY UNDER PENALTY OF LAW THAT I HAVE PERSONALLY EXAMINED AND AM FAMILIAR WITH THE INFORMATION SUBMITTED HEREIN; AND BASED ON MY INQUIRY OF THOSE INDIVIDUALS IMMEDIATELY RESPONSIBLE FOR OBTAINING THE INFORMATION, I BELIEVE THE SUBMITTED INFORMATION IS TRUE, ACCURATE, AND COMPLETE. I AM AWARE THAT THERE ARE SIGNIFICANT PENALTIES FOR SUBMITTING FALSE INFORMATION, INCLUDING THE POSSIBILITY OF FINE AND IMPRISONMENT. SEE 18 USC § 1001 AND 33 USC § 1319. (Penalties under these statutes may include fines up to $10,000 and or maximum imprisonment of between 6 months and 5 years.)

SIGNATURE OF PRINCIPAL EXECUTIVE OFFICER OR AUTHORIZED AGENT

TELEPHONE		DATE		
317	973-7000	94	05	25
AREA CODE	NUMBER	YEAR	MO	DAY

COMMENT AND EXPLANATION OF ANY VIOLATIONS (Reference all attachments here)

...OG ... S. ... SQUIR
RICHMOND IN 47374

IN0055719 — PERMIT NUMBER
001 A — DISCHARGE NUMBER

dINOS — F - FINAL

Form Approved.
OMB No. 2040-0004.
Approval expires 6-30-91.

MONITORING PERIOD

FROM YEAR	MO	DAY	TO YEAR	MO	DAY
94	05	01	94	05	31
(20-21)	(22-23)	(24-25)	(26-27)	(28-29)	(30-31)

*** NO DISCHARGE ***

NOTE: Read instructions before completing this form.

...: MR. ROBERT A. HART

PARAMETER (32-47)		(1 Card Only) (46-53) QUANTITY OR LOADING (54-61) AVERAGE	MAXIMUM	UNITS	(1 Card Only) (18-25) QUALITY OR CONCENTRATION (46-53) MINIMUM	AVERAGE	MAXIMUM	UNITS	NO. EX (62-63)	FREQUENCY OF ANALYSIS (64-68)	SAMPLE TYPE (69-70)
...ERATURE, WATER ... FAHRENHEIT 1 1 0 0 ...DENT GROSS VALU	SAMPLE MEASUREMENT	******	******	**** ****	******	75.6	85.5	(15) DEG. F	NA	02/07	Grab
...0 1 0 0 ...DENT GROSS VALU	SAMPLE MEASUREMENT	******	******	**** ****	7.07	******	8.39	(12) SU	0	01/07	Grab
...DS, TOTAL ...ENDED 0 1 0 0 ...DENT GROSS VALU	SAMPLE MEASUREMENT	******	******	**** ****	******	20.9	27	(19) MG/L	0	02/07	Grab
...AND GREASE ...N EXTR-GRAV METH 5 6 1 0 0 ...DENT GROSS VALU	SAMPLE MEASUREMENT	******	******	**** ****	******	<1.25	1.4	(19) MG/L	0	02/07	Grab
...ROGEN, AMMONIA ...L (AS N) 0 1 1 0 ...DENT GROSS VALU	SAMPLE MEASUREMENT	******	******	**** ****	******	0.226	0.286	(19) MG/L	0	02/31	Grab
...L RECOVERABLE 0 1 0 0 ...DENT GROSS VALU	SAMPLE MEASUREMENT	******	******	**** ****	******	0.700	0.756	(19) MG/L	NA	02/32	Grab
...L RECOVERABLE 4 1 0 0 ...DENT GROSS VALU	SAMPLE MEASUREMENT	******	******	**** ****	******	0.078	0.100	(19) MG/L	0	02/31	Grab

...TLE PRINCIPAL EXECUTIVE OFFICER

I CERTIFY UNDER PENALTY OF LAW THAT I HAVE PERSONALLY EXAMINED AND AM FAMILIAR WITH THE INFORMATION SUBMITTED HEREIN; AND BASED ON MY INQUIRY OF THOSE INDIVIDUALS IMMEDIATELY RESPONSIBLE FOR OBTAINING THE INFORMATION, I BELIEVE THE SUBMITTED INFORMATION IS TRUE, ACCURATE AND COMPLETE. I AM AWARE THAT THERE ARE SIGNIFICANT PENALTIES FOR SUBMITTING FALSE INFORMATION, INCLUDING THE POSSIBILITY OF FINE AND IMPRISONMENT. SEE 18 USC § 1001 AND 33 USC § 1319. (Penalties under these statutes may include fines up to $10,000 and a maximum imprisonment of between 6 months and 5 years.)

TYPED OR PRINTED

SIGNATURE OF PRINCIPAL EXECUTIVE OFFICER OR AUTHORIZED AGENT

TELEPHONE AREA CODE	NUMBER	DATE YEAR	MO	DAY
317	973-7000	94	6	23

AND EXPLANATION OF ANY VIOLATIONS (Reference all attachments here)

EGB
2200 U.S. 27 SOUTH
RICHMOND IN 47374

PERMIT NUMBER: IN0055719
DISCHARGE NUMBER: 001 A

SIN ...
Form Approved.
OMB No. 2040-0004.
F - FINAL Approval expires 6-30-91.

MONITORING PERIOD

	YEAR	MO	DAY		YEAR	MO	DAY
FROM	94	05	01	TO	94	05	31
	(26-27)	(22-23)	(24-25)		(26-27)	(28-29)	(30-31)

*** NO DISCHARGE [ ] ***
NOTE: Read instructions before completing this form.

: MR. ROBERT A. HART

PARAMETER (32-37)		(3 Card Only) QUANTITY OR LOADING (46-53) AVERAGE	(54-61) MAXIMUM	UNITS	(4 Card Only) QUALITY OR CONCENTRATION (38-45) MINIMUM	(46-53) AVERAGE	(54-61) MAXIMUM	UNITS	NO. EX (62-63)	FREQUENCY OF ANALYSIS (64-68)	SAMPLE TYPE (69-70)
MINUM, AL RECOVERABLE 04 1 C 0 LUENT GROSS VALU	SAMPLE MEASUREMENT	******	******	**** ****	******	1.149	1.584	(19) MG/L	2	02/31	Grab
) AL RECOVERABLE 14 1 0 0 LUENT GROSS VALU	SAMPLE MEASUREMENT	******	******	**** ****	******	0.009	0.010	(19) MG/L	0	02/31	Grab
ER AL RECOVERABLE 9 1 C 0 LUENT GROSS VALU	SAMPLE MEASUREMENT	******	******	**** ****	******	0.045	0.046	(19) MG/L	0	02/31	Grab
ANTS, TOTAL DUAL 1 0 0 LUENT GROSS VALU	SAMPLE MEASUREMENT	******	******	**** ****	******	<0.05	<0.05	(19) MG/L	0	02/01	Grab
, IN CONDUIT OR TREATMENT PLAN C 1 0 0 LUENT GROSS VALU	SAMPLE MEASUREMENT	0.6144	0.6848	(03) MGD	******	******	******	**** ****	N/A	03/01	Instant
	SAMPLE MEASUREMENT										
	SAMPLE MEASUREMENT										

TITLE PRINCIPAL EXECUTIVE OFFICER

I CERTIFY UNDER PENALTY OF LAW THAT I HAVE PERSONALLY EXAMINED AND AM FAMILIAR WITH THE INFORMATION SUBMITTED HEREIN; AND BASED ON MY INQUIRY OF THOSE INDIVIDUALS IMMEDIATELY RESPONSIBLE FOR OBTAINING THE INFORMATION I BELIEVE THE SUBMITTED INFORMATION IS TRUE, ACCURATE AND COMPLETE. I AM AWARE THAT THERE ARE SIGNIFICANT PENALTIES FOR SUBMITTING FALSE INFORMATION, INCLUDING THE POSSIBILITY OF FINE AND IMPRISONMENT. SEE 18 USC § 1001 AND 33 USC § 1319 (Penalties under these statutes may include fines up to $10,000 and a maximum imprisonment of between 6 months and 5 years.)

TYPED OR PRINTED

SIGNATURE OF PRINCIPAL EXECUTIVE OFFICER OR AUTHORIZED AGENT

TELEPHONE		DATE		
317	973-7220	94	6	23
AREA CODE	NUMBER	YEAR	MO	DAY

T AND EXPLANATION OF ANY VIOLATIONS (Reference all attachments here)

PERMITTEE NAME/ADDRESS (Include Facility Name/Location if different)
NAME RICHMOND POWER & LIGHT
ADDRESS 2000 U.S. 27 SOUTH
RICHMOND IN 47374

FACILITY
LOCATION
ATTN: MR. ROBERT A. HART

NATIONAL POLLUTANT DISCHARGE ELIMINATION SYSTEM (NPDES)
DISCHARGE MONITORING REPORT (DMR)

(2-15) IN0055719 PERMIT NUMBER
(17-19) 001 A DISCHARGE NUMBER

MINOR
F - FINAL

Form Approved.
OMB No. 2040-0004
Approval expires 10-31-94

MONITORING PERIOD

	YEAR	MO	DAY		YEAR	MO	DAY
FROM	94	07	01	TO	94	07	31
	(20-21)	(22-23)	(24-25)		(26-27)	(28-29)	(30-31)

*** NO DISCHARGE [ ] ***
NOTE: Read instructions before completing this form.

PARAMETER (32-37)		(1 Card Only) QUANTITY OR LOADING (46-53) AVERAGE	(54-61) MAXIMUM	UNITS	(4 Card Only) QUALITY OR CONCENTRATION (38-45) MINIMUM	(46-53) AVERAGE	(54-61) MAXIMUM	UNITS	NO. EX (62-63)	FREQUENCY OF ANALYSIS (64-69)	SAMPLE TYPE (70)
pH	SAMPLE MEASUREMENT	******	******		7.36	******	7.72	(12)	0	01/07	Gra
00400 1 0 0 EFFLUENT GROSS VALUE	PERMIT REQUIREMENT	******	******	**** ****	6.0 MINIMUM	******	9.0 MAXIMUM	SU		WEEKLY	GRAB
SOLIDS, TOTAL SUSPENDED	SAMPLE MEASUREMENT	******	******		******	15.4	25	(19)	0	02/07	Gra
00530 1 0 0 EFFLUENT GROSS VALUE	PERMIT REQUIREMENT	******	******	**** ****	******	30.0 NO AVG	70.0 DAILY MX	MG/L		TWICE/WEEK	GRAB
OIL AND GREASE FREON EXTR-GRAV METH	SAMPLE MEASUREMENT	******	******		******	<1.29	2.0	(19)	0	02/07	Gra
00556 1 0 0 EFFLUENT GROSS VALUE	PERMIT REQUIREMENT	******	******	**** ****	******	10.0 NO AVG	15.0 DAILY MX	MG/L		TWICE/WEEK	GRAB
IRON TOTAL RECOVERABLE	SAMPLE MEASUREMENT	******	******		******	0.714	0.947	(19)	NA	02/31	Gra
00980 1 0 0 EFFLUENT GROSS VALUE	PERMIT REQUIREMENT	******	******	**** ****	******	REPORT NO AVG	REPORT DAILY MX	MG/L		TWICE/MONTH	GRAB
ZINC TOTAL RECOVERABLE	SAMPLE MEASUREMENT	******	******		******	0.23	0.368	(19)	1	02/31	Gra
01094 1 0 0 EFFLUENT GROSS VALUE	PERMIT REQUIREMENT	******	******	**** ****	******	0.20 NO AVG	0.46 DAILY MX	MG/L		TWICE/MONTH	GRAB
ALUMINUM, TOTAL RECOVERABLE	SAMPLE MEASUREMENT	******	******		******	0.58	0.62	(19)	2	04/31	Gra
01104 1 0 0 EFFLUENT GROSS VALUE	PERMIT REQUIREMENT	******	******	**** ****	******	0.17 NO AVG	0.40 DAILY MX	MG/L		TWICE/MONTH	GRAB
LEAD TOTAL RECOVERABLE	SAMPLE MEASUREMENT	******	******		******	0.009	0.009	(19)	0	02/31	Gra
01114 1 0 0 EFFLUENT GROSS VALUE	PERMIT REQUIREMENT	******	******	**** ****	******	0.01 NO AVG	0.02 DAILY MX	MG/L		TWICE/MONTH	GRAB

NAME/TITLE PRINCIPAL EXECUTIVE OFFICER

TYPED OR PRINTED

I CERTIFY UNDER PENALTY OF LAW THAT I HAVE PERSONALLY EXAMINED AND AM FAMILIAR WITH THE INFORMATION SUBMITTED HEREIN AND BASED ON MY INQUIRY OF THOSE INDIVIDUALS IMMEDIATELY RESPONSIBLE FOR OBTAINING THE INFORMATION, I BELIEVE THE SUBMITTED INFORMATION IS TRUE, ACCURATE AND COMPLETE. I AM AWARE THAT THERE ARE SIGNIFICANT PENALTIES FOR SUBMITTING FALSE INFORMATION, INCLUDING THE POSSIBILITY OF FINE AND IMPRISONMENT. SEE 18 U.S.C. § 1001 AND 33 U.S.C. § 1319. (Penalties under these statutes may include fines up to $10,000 and/or maximum imprisonment of between 6 months and 5 years.)

SIGNATURE OF PRINCIPAL EXECUTIVE OFFICER OR AUTHORIZED AGENT

TELEPHONE: AREA CODE 317, NUMBER 973-7200

DATE: YEAR 94, MO 8, DAY 29

COMMENT AND EXPLANATION OF ANY VIOLATIONS (Reference all attachments here)

SEE ATTACHMENT A

PERMITTEE NAME/ADDRESS (Include Facility Name/Location if different)

NAME RICHMOND POWER & LIGHT

ADDRESS 2000 U.S. 27 SOUTH

RICHMOND IN 47374

FACILITY

LOCATION

ATTN: MR. ROBERT A. HART

NATIONAL POLLUTANT DISCHARGE ELIMINATION SYSTEM (NPDES)

DISCHARGE MONITORING REPORT (DMR)

(1-6) IN0055719 PERMIT NUMBER

(7-10) 001 A DISCHARGE NUMBER

MINOR

F - FINAL

Form Approved. OMB No. 2040-0004 Approval expires 10-31-94

MONITORING PERIOD	YEAR	MO	DAY	TO	YEAR	MO	DAY
FROM	94	07	01		94	07	31
	(20-21)	(22-23)	(24-25)		(26-27)	(28-29)	(30-31)

*** NO DISCHARGE | | ***

NOTE: Read instructions before completing this for

PARAMETER (32-37)		(3 Card Only) (46-53) QUANTITY OF LOADING (54-61) AVERAGE	MAXIMUM	UNITS	(4 Card Only) (38-45) QUALITY OR CONCENTRATION (54-61) MINIMUM	AVERAGE	MAXIMUM	UNITS	NO. EX (62-67)	FREQUENCY OF ANALYSIS (68-73)	S
COPPER TOTAL RECOVERABLE 01119 1 0 0 EFFLUENT GROSS VALUE	SAMPLE MEASUREMENT	******	******		******	0.053	0.062	(19)	2	04/31	6
	PERMIT REQUIREMENT	******	******	*** ****	******	0.02 NO AVG	0.05 DAILY MX	MG/L		TWICE/SR MONTH	
OXIDANTS, TOTAL RESIDUAL 34044 1 0 0 EFFLUENT GROSS VALUE	SAMPLE MEASUREMENT	******	******		******	<0.05	<0.05	(19)	0	02/07	6
	PERMIT REQUIREMENT	******	******	**** ****	******	0.05 NO AVG	0.05 DAILY MX	MG/L		TWICE/CRA WEEK	
FLOW, IN CONDUIT OR THRU TREATMENT PLANT 50050 1 0 0 EFFLUENT GROSS VALUE	SAMPLE MEASUREMENT	0.6426	0.7039	(03)	******	******	******		NA	03/07	UN
	PERMIT REQUIREMENT	*REPORT* NO AVG	*REPORT* DAILY MX	MGD	******	******	******	**** ****		THREE/INS WEEK	
	SAMPLE MEASUREMENT										
	PERMIT REQUIREMENT										
	SAMPLE MEASUREMENT										
	PERMIT REQUIREMENT										
	SAMPLE MEASUREMENT										
	PERMIT REQUIREMENT										
	SAMPLE MEASUREMENT										
	PERMIT REQUIREMENT										

NAME/TITLE PRINCIPAL EXECUTIVE OFFICER

TYPED OR PRINTED

I CERTIFY UNDER PENALTY OF LAW THAT I HAVE PERSONALLY EXAMINED AND AM FAMILIAR WITH THE INFORMATION SUBMITTED HEREIN; AND BASED ON MY INQUIRY OF THOSE INDIVIDUALS IMMEDIATELY RESPONSIBLE FOR OBTAINING THE INFORMATION, I BELIEVE THE SUBMITTED INFORMATION IS TRUE, ACCURATE AND COMPLETE. I AM AWARE THAT THERE ARE SIGNIFICANT PENALTIES FOR SUBMITTING FALSE INFORMATION, INCLUDING THE POSSIBILITY OF FINE AND IMPRISONMENT. SEE 18 USC § 001 AND 33 USC § 1319. (Punishes under these statutes may include fines up to $10,000 and or maximum imprisonment of between 6 months and 5 years.)

SIGNATURE OF PRINCIPAL EXECUTIVE OFFICER OR AUTHORIZED AGENT

TELEPHONE		DATE	
AREA CODE	NUMBER	YEAR	MO
317	973-7200	94	8

CONSENT AND EXPLANATION OF ANY VIOLATIONS (Reference all attachments here)

NAME RICHMOND POWER & LIGHT
ADDRESS 2000 U.S. 27 SOUTH
RICHMOND IN 47374

FACILITY
LOCATION

ATTN: MR. ROBERT A. HART

SCH (2-16) | EMC | IR NI | POR (17-19) | AR

IN0055719 — PERMIT NUMBER
001 L — DISCHARGE NUMBER

MINOR

F - FINAL

Form Approved.
OMB No. 2040-0004
Approval expires 10-31-94

MONITORING PERIOD	YEAR	MO	DAY	TO	YEAR	MO	DAY
FROM	94	08	01		94	08	31
	(20-21)	(22-23)	(24-25)		(26-27)	(28-29)	(30-31)

*** NO DISCHARGE | | ***

NOTE: Read Instructions before completing this form.

PARAMETER (32-37)		(3 Card Only) QUANTITY OR LOADING (46-53) AVERAGE	(54-61) MAXIMUM	UNITS	(4 Card Only) QUALITY OR CONCENTRATION (38-45) MINIMUM	(46-53) AVERAGE	(54-61) MAXIMUM	UNITS	NO. EX (62-63)	FREQUENCY OF ANALYSIS (64-68)	SAMPLE TYPE (69)
PH	SAMPLE MEASUREMENT	******	******		7.50	******	7.82	(12)	0	01/07	Gra
00400 1 0 0 EFFLUENT GROSS VALUE	PERMIT REQUIREMENT	******	******	**** ****	6.0 MINIMUM	******	9.0 MAXIMUM	SU		WEEKLY	GRAB
SOLIDS, TOTAL SUSPENDED	SAMPLE MEASUREMENT	******	******		******	11.4	20	(19)	0	02/07	Gra
00530 1 0 0 EFFLUENT GROSS VALUE	PERMIT REQUIREMENT	******	******	**** ****	******	30.0 MO AVG	70.0 DAILY MX	MG/L		TWICE/WEEK	GRAB
OIL AND GREASE FREON EXTR-GRAV METH	SAMPLE MEASUREMENT	******	******		******	<1.1	1.4	(19)	0	02/07	Gra
00556 1 0 0 EFFLUENT GROSS VALUE	PERMIT REQUIREMENT	******	******	**** ****	******	10.0 MO AVG	15.0 DAILY MX	MG/L		TWICE/WEEK	GRAB
IRON TOTAL RECOVERABLE	SAMPLE MEASUREMENT	******	******		******	0.447	0.470	(19)	NA	02/31	Gra
01060 1 0 0 EFFLUENT GROSS VALUE	PERMIT REQUIREMENT	******	******	**** ****	******	REPORT MO AVG	REPORT DAILY MX	MG/L		TWICE/MONTH	GRAB
ZINC TOTAL RECOVERABLE	SAMPLE MEASUREMENT	******	******		******	0.102	0.105	(19)	0	02/31	Gra
01094 1 0 0 EFFLUENT GROSS VALUE	PERMIT REQUIREMENT	******	******	**** ****	******	0.20 MO AVG	0.46 DAILY MX	MG/L		TWICE/MONTH	GRAB
ALUMINUM, TOTAL RECOVERABLE	SAMPLE MEASUREMENT	******	******		******	0.400	0.424	(19)	2	02/31	Gra
01104 1 0 0 EFFLUENT GROSS VALUE	PERMIT REQUIREMENT	******	******	**** ****	******	0.17 MO AVG	0.40 DAILY MX	MG/L		TWICE/MONTH	GRAB
LEAD TOTAL RECOVERABLE	SAMPLE MEASUREMENT	******	******		******	0.006	0.010	(19)	0	04/31	Grab
01114 1 0 0 EFFLUENT GROSS VALUE	PERMIT REQUIREMENT	******	******	**** ****	******	0.01 MO AVG	0.02 DAILY MX	MG/L		TWICE/MONTH	GRAB

NAME/TITLE PRINCIPAL EXECUTIVE OFFICER

I CERTIFY UNDER PENALTY OF LAW THAT I HAVE PERSONALLY EXAMINED AND AM FAMILIAR WITH THE INFORMATION SUBMITTED HEREIN AND BASED ON MY INQUIRY OF THOSE INDIVIDUALS IMMEDIATELY RESPONSIBLE FOR OBTAINING THE INFORMATION I BELIEVE THE SUBMITTED INFORMATION IS TRUE, ACCURATE AND COMPLETE. I AM AWARE THAT THERE ARE SIGNIFICANT PENALTIES FOR SUBMITTING FALSE INFORMATION, INCLUDING THE POSSIBILITY OF FINE AND IMPRISONMENT. SEE 18 U.S.C. § 1001 AND 33 U.S.C. § 1319 (Penalties under these statutes may include fines up to $10,000 and or maximum imprisonment of between 6 months and 5 years)

TYPED OR PRINTED

SIGNATURE OF PRINCIPAL EXECUTIVE OFFICER OR AUTHORIZED AGENT

TELEPHONE		DATE		
317	973-7200	94	9	26
AREA CODE	NUMBER	YEAR	MO	DA

COMMENT AND EXPLANATION OF ANY VIOLATIONS (Reference all attachments here)

Facility Name/Location (if different)
NAME RICHMOND POWER & LIGHT
ADDRESS 2000 U.S. 27 SOUTH
RICHMOND IN 47374
FACILITY
LOCATION
ATTN: MR. ROBERT A. HART

DISCHARGE MONITORING REPORT (DMR)

(2-16) IN0055719 PERMIT NUMBER

(7-19) 001 A DISCHARGE NUMBER

MINOR

F - FINAL

Form Approved.
OMB No. 2040-0004
Approval expires 10-31-94

MONITORING PERIOD	YEAR	MO	DAY		YEAR	MO	DAY
FROM	94	08	01	TO	94	08	31
	(26-27)	(22-23)	(24-25)		(26-27)	(28-29)	(30-31)

**** NO DISCHARGE ****

NOTE: Read Instructions before completing this form.

PARAMETER (32-37)		(3 Card Only) QUANTITY OR LOADING (46-53) AVERAGE	(54-61) MAXIMUM	UNITS	(4 Card Only) QUALITY OR CONCENTRATION (38-45) MINIMUM	(46-53) AVERAGE	(54-61) MAXIMUM	UNITS	NO. EX (42-43)	FREQUENCY OF ANALYSIS (44-48)	SAMPLE TYPE (49-50)
COPPER TOTAL RECOVERABLE 01119 1 0 0 EFFLUENT GROSS VALUE	SAMPLE MEASUREMENT	******	******		******	0.054	0.061	(19)	2	08/31	Grab
	PERMIT REQUIREMENT	******	******	**** ****	******	0.02 MO AVG	0.05 DAILY MX	MG/L		THREE/MONTH	GRAB
OXIDANTS, TOTAL RESIDUAL 34044 1 0 0 EFFLUENT GROSS VALUE	SAMPLE MEASUREMENT	******	******		******	<0.05	<0.05	(19)	0	02/07	Grab
	PERMIT REQUIREMENT	******	******	**** ****	******	0.05 MO AVG	0.05 DAILY MX	MG/L		THREE/WEEK	GRAB
FLOW, IN CONDUIT OR THRU TREATMENT PLANT 50050 1 0 0 EFFLUENT GROSS VALUE	SAMPLE MEASUREMENT	0.5807	0.6470	(03)	******	******	******		NA	03/07	Inst.
	PERMIT REQUIREMENT	REPORT MO AVG	REPORT DAILY MX	MGD	******	******	******	**** ****		THREE/WEEK	INSTA
	SAMPLE MEASUREMENT										
	PERMIT REQUIREMENT										
	SAMPLE MEASUREMENT										
	PERMIT REQUIREMENT										
	SAMPLE MEASUREMENT										
	PERMIT REQUIREMENT										

NAME/TITLE PRINCIPAL EXECUTIVE OFFICER

TYPED OR PRINTED

I CERTIFY UNDER PENALTY OF LAW THAT I HAVE PERSONALLY EXAMINED AND AM FAMILIAR WITH THE INFORMATION SUBMITTED HEREIN AND BASED ON MY INQUIRY OF THOSE INDIVIDUALS IMMEDIATELY RESPONSIBLE FOR OBTAINING THE INFORMATION, I BELIEVE THE SUBMITTED INFORMATION IS TRUE, ACCURATE AND COMPLETE. I AM AWARE THAT THERE ARE SIGNIFICANT PENALTIES FOR SUBMITTING FALSE INFORMATION, INCLUDING THE POSSIBILITY OF FINE AND IMPRISONMENT. SEE 18 U.S.C. § 1001 AND 33 U.S.C. § 1319 (Penalties under these statutes may include fines up to $10,000 and/or maximum imprisonment of between 6 months and 5 years)

SIGNATURE OF PRINCIPAL EXECUTIVE OFFICER OR AUTHORIZED AGENT

TELEPHONE		DATE		
317 973-7300		94	9	26
AREA CODE	NUMBER	YEAR	MO	DAY

COMMENT AND EXPLANATION OF ANY VIOLATIONS (Reference all attachments here)

APPENDIX F

COAL ANALYSIS

LIFAC NA DEMONSTRATION PROJECT
RICHMOND POWER AND LIGHT
WHITEWATER VALLEY GENERATING UNIT #2

OPERATIONS AND POST-LIFAC TESTS
ENVIRONMENTAL MONITORING REPORT

ICF KAISER ENGINEERS, INC.
PITTSBURGH, PENNSYLVANIA

STANDARD LABORATORIES, INC.

1530 N. CULLEN AVENUE
EVANSVILLE, IN 47715

No. 73658

Date Rec'd. 05/18/94

Date Sampled 05/17/94

Sampled By CLIENT

ICF KAISER ENGINEERING
4 GATEWAY CENTER
PITTSBURGH, PA 15222-1207
ATTN: MR. JIM HERVOL

SAMPLE IDENTIFICATION

COAL SAMPLE FROM STA. #1

DATE REPORTED: 06/02/94

	% Moisture	% Ash	% Volatile	% Fixed Carbon	B.T.U./LB.	% Sulfur
As Rec'd.	13.66	8.04	34.55	43.75	11368	2.24
Dry Basis	-----	9.32	40.01	50.67	13167	2.59
M-A-Free					14519	
Method						

Respectfully Submitted.

BRETT STOCK

FOR YOUR PROTECTION THIS DOCUMENT HAS BEEN PRINTED ON CONTROLLED PAPER STOCK. NOT VALID IF ALTERED

o. No. 73658

ate Rec'd 05/18/94

te Sampled 05/17/94

mpled By CLIENT

STANDARD LABORATORIES, INC.

1530 N. CULLEN AVENUE
EVANSVILLE, IN 47715

SAMPLE ID.
COAL SAMPLE FROM STA. #1

CF KAISER ENGINEERING
GATEWAY CENTER
TTSBURGH, PA 15222-1207
TTN: MR. JIM HERVOL

DATE REPORTED: 06/02/94

ULTIMATE ANALYSIS OF COAL	% DRY BASIS
ASH	9.32
HYDROGEN	5.11
CARBON	74.32
NITROGEN	1.53
SULFUR	2.59
OXYGEN	7.13

FOR YOUR PROTECTION THIS DOCUMENT HAS
SEEN PRINTED ON CONTROLLED PAPER STOCK.
NOT VALID IF ALTERED

Respectfully Submitted,

BRETT A. STOCK

o. No. 73659

Date Rec'd. 05/18/94

te Sampled 05/17/94

mpled By CLIENT

STANDARD LABORATORIES, INC.

1530 N. CULLEN AVENUE
EVANSVILLE, IN 47715

ICF KAISER ENGINEERING
4 GATEWAY CENTER
PITTSBURGH, PA 15222-1207
ATTN: MR. JIM HERVOL

SAMPLE IDENTIFICATION

COAL SAMPLE FROM STA. #2

DATE REPORTED: 06/02/94

	% Moisture	% Ash	% Volatile	% Fixed Carbon	B.T.U./LB.	% Sulfur
As Rec'd.	13.70	8.22	34.71	43.37	11343	2.15
Dry Basis	-----	9.53	40.22	50.25	13143	2.49
M-A-Free					14527	
Method						

FOR YOUR PROTECTION THIS DOCUMENT HAS BEEN PRINTED ON CONTROLLED PAPER STOCK NOT VALID IF ALTERED

Respectfully Submitted,

73659

05/18/94

05/17/94

CLIENT

STANDARD LABORATORIES, INC.

1530 N. CULLEN AVENUE
EVANSVILLE, IN 47715

SAMPLE ID:
COAL SAMPLE FROM STA. #2

ISER ENGINEERING
WAY CENTER
URGH, PA 15222-1207
MR. JIM HERVOL

DATE REPORTED: 06/02/94

ULTIMATE ANALYSIS OF COAL	% DRY BASIS
ASH	9.53
HYDROGEN	5.06
CARBON	74.17
NITROGEN	1.43
SULFUR	2.49
OXYGEN	7.32

YOUR PROTECTION THIS DOCUMENT HAS
PRINTED ON CONTROLLED PAPER STOCK
NOT VALID IF ALTERED

Respectfully Submitted,

BRETT A. STOCK

Lab No 73660

Date Rec'd. 05/18/94

Date Sampled 05/17/94

Sampled By CLIENT

STANDARD LABORATORIES, INC.

1530 N. CULLEN AVENUE
EVANSVILLE, IN 47715

ICF KAISER ENGINEERING
4 GATEWAY CENTER
PITTSBURGH, PA 15222-1207
ATTN: MR. JIM HERVOL

SAMPLE IDENTIFICATION

COAL SAMPLE FROM STA. #3

DATE REPORTED: 06/02/94

	% Moisture	% Ash	% Volatile	% Fixed Carbon	B.T.U./LB.	% Sulfur
As Rec'd.	13.79	8.11	34.72	43.38	11432	2.07
Dry Basis	-----	9.41	40.27	50.32	13261	2.40
M-A-Free					14638	
Method						

FOR YOUR PROTECTION THIS DOCUMENT HAS BEEN PRINTED ON CONTROLLED PAPER STOCK NOT VALID IF ALTERED

Respectfully Submitted.

Lab. No 73660

Date Rec'd 05/18/94

Date Sampled 05/17/94

Sampled By CLIENT

STANDARD LABORATORIES, INC.

1530 N. CULLEN AVENUE
EVANSVILLE, IN 47715

SAMPLE ID:
COAL SAMPLE FROM STA. #3

ICF KAISER ENGINEERING
4 GATEWAY CENTER
PITTSBURGH, PA 15222-1207
ATTN: MR. JIM HERVOL

DATE REPORTED: 06/02/94

ULTIMATE ANALYSIS OF COAL	% DRY BASIS
ASH	9.41
HYDROGEN	5.03
CARBON	74.07
NITROGEN	1.52
SULFUR	2.40
OXYGEN	7.57

FOR YOUR PROTECTION THIS DOCUMENT HAS BEEN PRINTED ON CONTROLLED PAPER STOCK NOT VALID IF ALTERED.

Respectfully Submitted,

BRETT A. STOCK

Lab. No 73661

Date Rec'd. 05/18/94

Date Sampled 05/17/94

Sampled By CLIENT

STANDARD LABORATORIES, INC.

1530 N. CULLEN AVENUE
EVANSVILLE, IN 47715

ICF KAISER ENGINEERING
4 GATEWAY CENTER
PITTSBURGH, PA 15222-1207
ATTN: MR. JIM HERVOL

SAMPLE IDENTIFICATION

COMPOSITE OF STA. #1,2,&3

CHLORINE = <0.01% DRY COAL BASIS
FLUORINE = 43.6 UG/G DRY COAL BASIS
ARSENIC = 7.84 UG/G DRY COAL BASIS

DATE REPORTED: 06/10/94

	% Moisture	% Ash	% Volatile	% Fixed Carbon	B.T.U./LB.	% Sulfur
As Rec'd.	13.46	8.27	XXXX	XXXX	11487	2.12
Dry Basis	-----	9.56	XXXX	XXXX	13274	2.45
M-A-Free					14677	
Method						

FREE SWELLING INDEX : XXXX

ASH FUSION TEMPERATURES (DEG F)	REDUCING	OXIDIZING
INITIAL	2080	2495
SOFTENING	2200	2515
HEMISPHERICAL	2305	2540
FINAL	2375	2570

HARDGROVE GRINDABILITY INDEX : 50 @ 3.22 % MOISTURE

NOTE: XXXX INDICATES ANALYSIS WAS NOT PERFORMED

Respectfully Submitted.

FOR YOUR PROTECTION THIS DOCUMENT HAS BEEN PRINTED ON CONTROLLED PAPER STOCK. NOT VALID IF ALTERED

Lab. No. 73661

Date Rec'd 05/18/94

Date Sampled 05/17/94

Sampled By CLIENT

STANDARD LABORATORIES, INC.

1530 N. CULLEN AVENUE
EVANSVILLE, IN 47715

SAMPLE ID:

COMPOSITE OF STA. #1,2,&3

ICF KAISER ENGINEERING
4 GATEWAY CENTER
PITTSBURGH, PA 15222-1207
ATTN: MR. JIM HERVOL

DATE REPORTED: 06/10/94

MINERAL ANALYSIS OF ASH	% IGNITED BASIS
SILICON DIOXIDE (SIO2)	39.48
ALUMINUM OXIDE (AL2O3)	24.31
TITANIUM DIOXIDE (TIO2)	0.99
CALCIUM OXIDE (CAO)	3.10
POTASSIUM OXIDE (K2O)	1.70
MAGNESIUM OXIDE (MGO)	0.59
SODIUM OXIDE (NA2O)	0.45
PHOSPHORUS PENTOXIDE (P2O5)	0.42
FERRIC OXIDE (FE2O3)	26.30
SULFUR TRIOXIDE (SO3)	2.66
UNDETERMINED	0.00

BASE/ACID RATIO: 0.4962
LBS OF ASH/MILLION BTU: 7.20
SLAG VISCOSITY: 2310 DEG F. T250 POISE
FOULING INDEX: 0.2252 TYPE: MEDIUM
SLAGGING INDEX: 1.2157 TYPE: MEDIUM
SILICA VALUE: 56.8304
% ALKALI AS NA2O: 0.1516

FOR YOUR PROTECTION THIS DOCUMENT HAS BEEN PRINTED ON CONTROLLED PAPER STOCK. NOT VALID IF ALTERED.

Respectfully Submitted,

BRETT A. STOCK

Lab. No. 78152

Date Rec'd. 08/18/94

Date Sampled --------

Sampled By CLIENT

STANDARD LABORATORIES, INC.
1530 N. CULLEN AVENUE
EVANSVILLE, IN 47715

ICF KAISER ENGINEERING
4 GATEWAY CENTER
PITTSBURGH, PA 15222-1207
ATTN: MR. JIM HERVOL

SAMPLE IDENTIFICATION

ST #1
STACK TEST 1
08/16/94

DATE REPORTED: 09/08/94

	% Moisture	% Ash	% Volatile	% Fixed Carbon	B.T.U./LB.	% Sulfur
As Rec'd.	13.07	8.91	35.75	42.27	11429	2.29
Dry Basis	-----	10.25	41.12	48.63	13147	2.64
M-A-Free					14648	
Method						

FOR YOUR PROTECTION THIS DOCUMENT HAS BEEN PRINTED ON CONTROLLED PAPER STOCK.

Respectfully Submitted, Brett Steck TC

Lab. No. 78152

Date Rec'd 08/18/94

Date Sampled ------

Sampled By CLIENT

STANDARD LABORATORIES, INC.

1530 N. CULLEN AVENUE
EVANSVILLE, IN 47715

SAMPLE ID:

ST #1
STACK TEST #1
08/16/94

ICF KAISER ENGINEERING
4 GATEWAY CENTER
PITTSBURGH, PA 15222-1507
ATTN: MR. JIM HERVOL

DATE REPORTED: 09/08/94

ULTIMATE ANALYSIS OF COAL	% DRY BASIS
ASH	10.25
HYDROGEN	5.17
CARBON	73.21
NITROGEN	1.67
SULFUR	2.64
OXYGEN	7.06

FOR YOUR PROTECTION THIS DOCUMENT HAS BEEN PRINTED ON CONTROLLED PAPER STOCK. NOT VALID IF ALTERED

Respectfully Submitted, Brett Stark TC

Lab. No 78153

Date Rec'd. 08/18/94

Date Sampled --------

Sampled By CLIENT

STANDARD LABORATORIES, INC.
1530 N. CULLEN AVENUE
EVANSVILLE, IN 47715

ICF KAISER ENGINEERING
4 GATEWAY CENTER
PITTSBURGH, PA 15222-1207
ATTN: MR. JIM HERVOL

SAMPLE IDENTIFICATION

ST #2
STACK TEST #2
08/16/94

DATE REPORTED: 09/08/94

	% Moisture	% Ash	% Volatile	% Fixed Carbon	B.T.U./LB.	% Sulfur
As Rec'd.	13.28	8.34	35.66	42.72	11578	2.36
Dry Basis	-----	9.61	41.12	49.27	13352	2.72
M-A-Free					14772	
Method						

FOR YOUR PROTECTION THIS DOCUMENT HAS BEEN PRINTED ON CONTROLLED PAPER STOCK.

Respectfully Submitted, Brett Stock TC

Lab. No 78153

Date Rec'd 08/18/94

Date Sampled ------

Sampled By CLIENT

STANDARD LABORATORIES, INC.

1530 N. CULLEN AVENUE
EVANSVILLE, IN 47715

SAMPLE ID: ST #2
STACK TEST #2
08/16/94

ICF KAISER ENGINEERING
4 GATEWAY CENTER
PITTSBURGH, PA 15222-1507
ATTN: MR. JIM HERVOL

DATE REPORTED: 09/08/94

ULTIMATE ANALYSIS OF COAL	% DRY BASIS
ASH	9.61
HYDROGEN	5.14
CARBON	73.74
NITROGEN	1.65
SULFUR	2.72
OXYGEN	7.14

FOR YOUR PROTECTION THIS DOCUMENT HAS BEEN PRINTED ON CONTROLLED PAPER STOCK. NOT VALID IF ALTERED.

Respectfully Submitted, Brett Stock, TC

Lab No 78154

Date Rec'd. 08/18/94

Date Sampled --------

Sampled By CLIENT

STANDARD LABORATORIES, INC.
1530 N. CULLEN AVENUE
EVANSVILLE, IN 47715

ICF KAISER ENGINEERING
4 GATEWAY CENTER
PITTSBURGH, PA 15222-1207
ATTN: MR. JIM HERVOL

SAMPLE IDENTIFICATION

ST #3
STACK TEST #3
08/16/94

DATE REPORTED: 09/08/94

	% Moisture	% Ash	% Volatile	% Fixed Carbon	B.T.U./LB.	% Sulfur
As Rec'd.	13.01	8.61	36.33	42.05	11500	2.36
Dry Basis	-----	9.90	41.76	48.34	13220	2.72
M-A-Free					14673	
Method						

FOR YOUR PROTECTION THIS DOCUMENT HAS BEEN PRINTED ON CONTROLLED PAPER STOCK.

Respectfully Submitted. Brett Stack TC

Lab. No. 78154

Date Rec'd 08/18/94

Date Sampled ------

Sampled By CLIENT

STANDARD LABORATORIES, INC.

1530 N. CULLEN AVENUE
EVANSVILLE, IN 47715

SAMPLE ID:

ST #3
STACK TEST #3
08/16/94

ICF KAISER ENGINEERING
4 GATEWAY CENTER
PITTSBURGH, PA 15222-1507
ATTN: MR. JIM HERVOL

DATE REPORTED: 09/08/94

ULTIMATE ANALYSIS OF COAL	% DRY BASIS
ASH	9.90
HYDROGEN	5.14
CARBON	73.42
NITROGEN	1.65
SULFUR	2.72
OXYGEN	7.17

FOR YOUR PROTECTION THIS DOCUMENT HAS
BEEN PRINTED ON CONTROLLED PAPER STOCK.
NOT VALID IF ALTERED

Respectfully Submitted, Brett Stock TC

APPENDIX G

PARTICULATE MATTER ANALYTICAL DATA, FIELD DATA SHEETS AND EQUIPMENT CALIBRATION DATA - OPERATIONS TESTS

LIFAC NA DEMONSTRATION PROJECT
RICHMOND POWER AND LIGHT
WHITEWATER VALLEY GENERATING UNIT #2

OPERATIONS AND POST-LIFAC TESTS
ENVIRONMENTAL MONITORING REPORT

ICF KAISER ENGINEERS, INC.
PITTSBURGH, PENNSYLVANIA

M5

MOSTARDI-PLATT ASSOCIATES, INC.

Project/Project Number: Richmond Power & Light / 42007

Date: 5. 20. 94 Analyst: I. Peyzakhov / T. Vought

Description UNIT 2 Outlet	Initial Weight	Final Weight	Net Weight Gain
Test # 5001, 5.17.94			
Filter # 2738	0.7709	0.8543	0.0834
Acetone Wash # 4856-60 160ml	7.9894	8.0330	0.0436
Acetone Blank			0.0005
Total Weight			0.1265
Test # 2 5002, 5.17.94			
Filter # 2733	0.7800	0.8621	0.0821
Acetone Wash # 4851-4855 200ml	7.9816	8.0471	0.0655
Acetone Blank			0.0006
Total Weight			0.1470
Test # 3 5003, 5.17.94			
Filter # 2735	0.7738	0.8822	0.1084
Acetone Wash # 4866-70 190ml	7.9678	8.0347	0.0669
Acetone Blank			0.0006
Total Weight			0.1747
Test #			
Filter #			
Acetone Wash # ml			
Acetone Blank			
Total Weight			
Blank			
Acetone Wash # 4886-89 100 ml	7.9900	7.9903	0.0003

I:\data\lab\M5.frm

OK

MOSTARDI-PLATT ASSOCIATES, INC.

TEST SUPPORT DATA

TEST RUN NO. R1

COMPANY Richmond Power & Light

PLANT Whitewater Valley

TEST LOCATION Unit #2 Outlet Duct

CLIENT ICF Kaiser

OPERATOR J Nosek

DATE 5/12/94

CONTROL BOX E-20 POT. NO. E-20

METER NO E-20

METER CALIBRATION FACTOR .985

PITOT ID NO. NA

PITOT TUBE COEFFICIENT 0.84

PORT LENGTH 27" in.

PORT SIZE 6" in.

PORT TYPE flange

IMPINGER H_2O:

FINAL 273 ml/gm

INITIAL 255 ml/gm

GAIN 18 ml/gm

SILICA GEL:

FINAL WT. 236.8 gm

INITIAL WT. 211.0 gm

WT. GAIN 25.8 gm

TOTAL H_2O COLLECTED 88.8

DESCRIPTION OF IMPINGER H_2O

SILICA GEL EXHAUSTED ?

IMPINGERS RECOVERED BY

SILICA GEL WEIGHED BY

COMMENTS & NOTES:

THIMBLE NO. TARE WT.

FILTER NO. 2232 TARE WT. 2220

BAROMETRIC PRESSURE in. Hg 29.31

FLUE PRESSURE in. H_2O -.7

FLUE PRESSURE in. Hg ABS.

PROBE LENGTH 13.5' ft.

PROBE LINER MATERIAL Steel - 316

NOZZLE IDENTIFICATION NO. NA

CALIBRATED NOZZLE DIAMETER .247 in

LEAK CHECK PRE .002@10 POST .012 @ 10 in Hg

DUCT SHAPE Circle DIAMETER

DUCT AREA 2.1 sq. ft. L 1.5' W

TEST LENGTH 60 min.

MINUTES PER POINT 2

TOTAL NUMBER OF TRAVERSE POINTS 12

GAS ANALYSIS (ORSAT/FYRITE):

CO_2 ~~13.5~~ 11.4

O_2 ~~5.7~~ 6.6

PITOT LEAK CHECK: PRE 3.6 POST ✓ 3.4"

ΔH@ 3.6"/3.5"

SAMPLES REMOVED FROM SITE BY JC

For computer data entry: Supervisor, please complete.

Do you want to enter a fuel analysis? Y ✓ N

What value do you want to use? F = 9,780 F_c = 1,800 Other –

Circle to indicate "Yes" or add other value if not given.

FIELD TEST DATA SHEET
FOR ISOKINETIC SAMPLING

MOSTARDI-PLATT ASSOCIATES, INC

PROJECT Richmond Power & Light

TEST RUN NO. R 1

TEST LOCATION Unit 2 stack

DATE 5/17/94 PAGE 1 OF 2

Port-Point No.	Velocity Head (P) in. H_2O	$\sqrt{P}$	Clock Time 24 hr.	Meter Volume (Vm) ft^3	Orifice (H) in. H_2O 3.044	Stack Temp. (t_s) °F	Meter Temp. (t_m) Inlet °F	Meter Temp. (t_m) Outlet °F	Meter Rate cfm .971	Pump Vacuum in. Hg	Notes	Probe Temp. °F	Filter Holder Temp. °F	Impgr. Outlet Temp. °F
1-1	.42	.648	10:02	91.037	1.304	225	75	74	.629	3	91.037	240	235	Full
2	.37	.608	:04	92.24	1.148	228	77	75	.591	3	92.245	241	238	[illegible]
3	.49	.70	10:06	93.45	1.521	234	78	75	.6797	3	93.476	242	240	
4	.60	.775	:08	94.67	1.862	235	79	76	.752	3	94.835	243	240	
5	.69	.831	1:10	96.26	2.142	235	80	77	.807	3	96.339	243	240	
6	.88	.938	[illegible]	97.87	2.73	233	82	77	.911	4	97.952	244	241	
7	.46	.678	10:14	99.57	1.403	233	81	77	.658	4	99.773	244	241	
8	.84	.917	10:16	101.100	2.561	235	82	77	.890	4	101.090	243	244	
			10:18	102.885	-0.145						102.871			
2-1	.52	.721	10:30	103.03	1.585	232	80	76	.700	4	102.871	243	[illegible]	
2	.55	.742	10:32	104.43	1.677	233	80	77	.720	4	104.271	242	241	
3	.44	.663	10:34	105.68	1.342	234	82	77	.644	4	105.711	245	[illegible]	
4	.37	.608	10:36	106.84	1.148	234	83	77	.591	4	107.00	[illegible]	[illegible]	
5	.39	.624	10:38	108.01	1.190	230	81	78	.606	4	108.182	[illegible]	[illegible]	
6	.75	.866	10:40	109.29	2.287	232	83	79	.841	4	109.394	[illegible]	[illegible]	
7	.77	.878	10:42	110.97	2.348	235	84	79	.852	4	111.076	[illegible]	[illegible]	
8	.77	.878	10:44	112.59	2.348	232	[illegible]	79	[illegible]	4	112.780	[illegible]	[illegible]	
			10:46	114.39							114.484			

FIELD TEST DATA SHEET
FOR ISOKINETIC SAMPLING

MOSTARDI-PLATT ASSOCIATES, INC

PROJECT Richmond Power & Light

TEST RUN NO. R 1

TEST LOCATION Unit #2 Stack

DATE 5/17

PAGE 2 OF 2

Port-Point No.	Velocity Head (P) in. H_2O	$\sqrt{P}$	Clock Time 24 hr.	Meter Volume (Vm) ft^3	Orifice (H) in. H_2O	Stack Temp. (t_s) °F	Meter Temp. (t_m) Inlet °F	Meter Temp. (t_m) Outlet °F	Meter Rate cfm	Pump Vacuum in. Hg	Notes	Probe Temp. °F	Filter Holder Temp. °F	Impgr. Outlet Temp. °F
3-1	.44	.63	10:48	114.39	1.348	232	84	79	.644	4	114.84	244	245	Fully
2	.54	.762	1050	115.67	1.768	233	84	79	.739	4	115.77	244	245	Iced
3	.36	.600	1052	117.16	1.098	233	84		.5846	4	117.29	244	244	
4	.56	.748	1054	118.41	1.707	235	8[illegible]		.7266	4	118.455	243	244	
5	.56	.748	1056	119.87	1.707	235	8[illegible]		.7266	4	119.902	243	244	
6	.34	.583	1058	121.29	1.036	235	8[illegible]		.566	4	121.361	243	243	
7	.62	.787	1100	122.45	1.890	236	8[illegible]		.765	4	122.493	243	243	
8	[illegible]	.787	1102	124.09	1.890	230	8[illegible]		.765	4	124.022	243	243	
			11:04	125.47							125.552			
1-1	.36	.600	11:06	125.47	1.098	227	86	81	.5836	4				
2	.68	.825	11:08	126.68	2.07	227	86	82	.801	4	126.717	243	242	
3	.76	.8718	11:10	128.27	2.317	227	86	82	.846	4	128.318	242	242	
4	.80	.894	11:12	129.89	2.439	228	87	83	.866	5	130.01	242	242	
5	.72	.849	11:14	131.59	2.195	230	87	83	.824	5	131.747	242	241	
6	.54	.735	11:16	133.30	1.646	235	88	84	.735	5	133.395	242	241	
7	.38	.616	11:18	134.87	1.159	229	88	84	.599	4	134.865	242	241	
8	.36	.600	11:20	136.09	1.098	229	88	84	.583	4	136.062	241	241	
			11:22	137.28							137.28			
						7396	5205							
		23.764			15.04	231.1	81.3							
		0.743			1.727	691.1	541.3							
				46.035										

MOSTARDI-PLATT ASSOCIATES, INC.

TEST SUPPORT DATA

TEST RUN NO. R2

COMPANY Richmond Power & Light

PLANT Whitewater Valley

TEST LOCATION Unit #2 Outlet Duct

CLIENT ICF Kaiser

OPERATOR J Nosek

DATE 2/13/94

CONTROL BOX [illegible]

POT. NO. [illegible]

METER NO. [illegible]

METER CALIBRATION FACTOR .985

PITOT ID NO. N/A

PITOT TUBE COEFFICIENT 0.84

PORT LENGTH 27" in.

PORT SIZE 6" in.

PORT TYPE Flange

IMPINGER H_2O:			SILICA GEL:		
FINAL	284	ml/gm	FINAL WT.	213.4	gm
INITIAL	200	ml/gm	INITIAL WT.	201.1	gm
GAIN	84	ml/gm	WT. GAIN	12.3	gm

TOTAL H_2O COLLECTED 96.3

DESCRIPTION OF IMPINGER H_2O

SILICA GEL EXHAUSTED ?

IMPINGERS RECOVERED BY

SILICA GEL WEIGHED BY

COMMENTS & NOTES:

THIMBLE NO. TARE WT.

FILTER NO. 2733 TARE WT. 782.2

BAROMETRIC PRESSURE in. Hg 29.2

FLUE PRESSURE in. H_2O 1.2

FLUE PRESSURE in. Hg ABS. 29.3

PROBE LENGTH 2 ft.

PROBE LINER MATERIAL [illegible] - 316

NOZZLE IDENTIFICATION NO. NA

CALIBRATED NOZZLE DIAMETER 0.257 in

LEAK CHECK PRE .010 POST .010 @ 12" in Hg

DUCT SHAPE Rect DIAMETER

DUCT AREA 84 sq. ft. L 14 W 6

TEST LENGTH 64 min.

MINUTES PER POINT 2

TOTAL NUMBER OF TRAVERSE POINTS 32

GAS ANALYSIS (ORSAT/FYRITE):

CO_2 13.3

O_2 6.3

PITOT LEAK CHECK: PRE ✓.002 POST ✓.006

ΔH@ 36"/3.4"

SAMPLES REMOVED FROM SITE BY JC

For computer data entry: Supervisor, please complete.

Do you want to enter a fuel analysis? Y ☑ N ☐

What value do you want to use? F = 9,780 F_c = 1,800 Other =

Circle to indicate "Yes" or add other value if not given.

Form No. 105 (Rev. 1/94)

FIELD TEST DATA SHEET
FOR ISOKINETIC SAMPLING

MOSTARDI-PLATT ASSOCIATES, INC

PROJECT [illegible]

TEST RUN NO. 2

TEST LOCATION UNIT 2 STACK

DATE [illegible] PAGE 1 OF [illegible]

Port-Point No.	Velocity Head (P) in. H_2O	$\sqrt{P}$	Clock Time 24 hr.	Meter Volume (Vm) ft^3	Orifice (H) 3.22 in. H_2O	Stack Temp. (t_s) °F	Meter Temp. (t_m) Inlet °F	Meter Temp. (t_m) Outlet °F	Meter Rate 1.016 cfm	Pump Vacuum in. Hg	Notes	Probe Temp. °F	Filter Holder Temp. °F	Impgr. Outlet Temp. °F
1-1	.28	.529	12:17	48.543	.9016	231	78	77	.5376	3	48.543	242	254	[illegible]
2	.42	.648	12:19	49.67	1.352	236	78	77	.658	3	49.618	242	254	[illegible]
3	.42	.648	12:21	50.87	1.352	236	79	77	.658	3	50.934	242	254	[illegible]
4	.56	.748	12:23	52.31	1.803	236	80	77	.760	3	52.251	243	254	
5	.78	.883	12:25	53.67	2.512	235	80	78	.897	3	53.771	243	254	
6	.65	.806	12:27	55.51	2.09	235	81	78	.819	3	55.566	243	254	
	.65	.806	12:29	57.17	2.09	235	81	78	.819	3	57.264	244	253	
8	.82	.906	12:31	58.79	2.64	234	82	78	.920	3	58.842	244	253	
			12:33	60.55							60.682			
1	.52	.721	12:36	60.55	1.674	228	83	79	.733	3		244	2[illegible]	
2	.58	.762	12:38	62.21	1.868	233	83	79	.774	3	62.147	245	253	
3	.46	.678	12:40	63.67	1.481	237	84	78	.689	3	63.694	246	25[illegible]	
4	.58	.762	12:42	64.96	1.866	238	84	79	.774	3	65.072	24[illegible]	253	
5	.66	.812	12:44	66.54	2.125	238	84	80	.825	3	66.620	24[illegible]	254	
6	.75	.866	12:46	68.[illegible]	2.415	239	95	80	.880	3	68.171	245	25[illegible]	
7	.78	.883	12:48	69.96	2.512	238	85	80	.897	3	70.03	246	25[illegible]	
8	.75	.866	12:50	71.79	2.415	230	85	80	.880	3	71.824	247	254	
			12:52	73.58							73.584			
						7572	5341							
		24.54			61.198	236.6	83.5							
		0.767		49.793	1.912	696.6	(52.5)							

FIELD TEST DATA SHEET
FOR ISOKINETIC SAMPLING

MOSTARDI-PLATT ASSOCIATES, INC

ROJECT [illegible]

EST RUN NO 2

EST LOCATION UNIT 2 - STACK

DATE [illegible] PAGE 2 OF 2

Port-Point No.	Velocity Head (P) in. H_2O	$\sqrt{P}$	Clock Time 24 hr.	Meter Volume (Vm) ft^3	Orifice (H) in. H_2O	Stack Temp. (t_s) °F	Meter Temp. (t_m) Inlet °F	Meter Temp. (t_m) Outlet °F	Meter Rate cfm	Pump Vacuum in. Hg	Notes	Probe Temp. °F	Filter Holder Temp. °F	Impgr. Outlet Temp. °F
1	.56	.748	12:55	73.58	1.803	237	87	81	.760	4	73.581	247	253	[illegible]
2	.60	.775	12:57	75.08	1.932	240	87	81	.787	4	75.104	247	253	[illegible]
3	.56	.748	12:59	76.64	1.803	237	87	81	[illegible]	4	76.678	247	253	[illegible]
4	.64	.80	13:01	78.06	2.061	239	89	[illegible]	.813	4	78.198	248	253	
5	.60	.787	13:03	79.78	1.996	240	90	81	.800	4	79.881	246	251	
6	.70	.837	13:05	80.99	2.254	242	90	81	.850	4	81.403	246	251	
	.62	.787	13:07	83.06	1.99	237	91	82	.800	4	83.123	242	251	
6	.49	.700	13:09	84.64	1.578	240	91	82	.711	4	84.723	242	251	
			13:11	86.21							86.144			
1	.47	.686	13:13	[illegible]	1.288	236	92	82	.697	4		242	252	
2	[illegible]	.806	13:15	87.55	2.093	239	92	82	.819	4	87.538	[illegible]	252	
3	.74	.860	13:17	89.21	2.388	237	93	82	.874	4	89.176	243	252	
4	.76	.871	13:19	90.92	2.447	239	94	82	.886	4	90.884	[illegible]	252	
5	.60	.775	13:21	92.57	1.932	239	95	83	.787	4	92.655	243	253	
6	.57	.755	13:23	93.94	1.835	239	95	83	.767	4	94.143	244	253	
1	.42	.648	13:25	95.55	1.352	239	96	83	.658	[illegible]	95.677	244	253	
2	.42	.648	13:27	97.04	1.352	236	96	83	.658	4	96.992	244	253	
			13:29	98.336							98.364			
				49.793										

MOSTARDI-PLATT ASSOCIATES, INC.

TEST SUPPORT DATA

TEST RUN NO. R3 (Sat/Sum)

COMPANY Richmond Power & Light

PLANT Whitewater Valley

TEST LOCATION Unit #2 Outlet Duct

CLIENT ICI Kaiser Engineering, Inc

OPERATOR J Mosek

DATE [illegible]

CONTROL BOX [illegible] POT. NO. [illegible]

METER NO. [illegible]

METER CALIBRATION FACTOR [illegible]

PITOT ID NO. NA

PITOT TUBE COEFFICIENT 0.84

PORT LENGTH [illegible] in.

PORT SIZE 6" in.

PORT TYPE Flange

IMPINGER H_2O:

FINAL 300 ml/gm

INITIAL 200 ml/gm

GAIN 100 ml/gm

SILICA GEL:

FINAL WT. 237.6 gm

INITIAL WT. 223.3 gm

WT. GAIN 14.3 gm

TOTAL H_2O COLLECTED 115.1

DESCRIPTION OF IMPINGER H_2O

SILICA GEL EXHAUSTED ?

IMPINGERS RECOVERED BY

SILICA GEL WEIGHED BY

COMMENTS & NOTES:

THIMBLE NO. TARE WT.

FILTER NO. 2735 TARE WT. .7736

BAROMETRIC PRESSURE in. Hg 29.31

FLUE PRESSURE in. H_2O +.75

FLUE PRESSURE in. Hg ABS. [illegible]

PROBE LENGTH [illegible] ft.

PROBE LINER MATERIAL [illegible] - 316

NOZZLE IDENTIFICATION NO. NA

CALIBRATED NOZZLE DIAMETER [illegible] in

LEAK CHECK PRE .010 POST 0.006 @ 10/11 in. Hg

DUCT SHAPE Rect DIAMETER

DUCT AREA 84 sq. ft. L 14.5 W 6

TEST LENGTH 54 min.

MINUTES PER POINT 3

TOTAL NUMBER OF TRAVERSE POINTS [illegible]

GAS ANALYSIS (ORSAT/FYRITE):

CO_2 13.3

O_2 6.4

PITOT LEAK CHECK: PRE ✓ POST ✓

ΔH@ 3.4"/3.6"

SAMPLES REMOVED FROM SITE BY JC

For computer data entry: Supervisor, please complete.

Do you want to enter a fuel analysis? Y ☑ N ☐

What value do you want to use? F = 9,780 F_c = 1,800 Other –

Circle to indicate "Yes" or add other value if not given.

FIELD TEST DATA SHEET
FOR ISOKINETIC SAMPLING

MOSTARDI PLATT ASSOCIATES, INC

ROJECT Richmond Power & Light

EST RUN NO. R 3 (Soot blowing)

EST LOCATION U. [illegible] Stack

DATE 5/[illegible] PAGE [illegible] OF [illegible]

Port-Point No.	Velocity Head (P) in. H_2O	$\sqrt{P}$	Clock Time 24 hr.	Meter Volume (Vm) ft^3	Orifice (H) in. H_2O	Stack Temp. (t_s) °F	Meter Temp. (t_m) Inlet °F	Meter Temp. (t_m) Outlet °F	Meter Rate cfm	Pump Vacuum in. Hg	Notes	Probe Temp. °F	Filter Holder Temp. °F	Impgr. Outlet Temp. °F
1-1	.45	.671	14:12	00.670	1.449	.233	87	87	.6[illegible]	3		.244	.250	Fully
2	.43	.656	14:14	2.141	1.485	.235	88	87	.666	3	2.033	.244	.250	Fully
3	.47	.412	14:16	3.38	1.713	.236	88	[illegible]	.697	3	3.365	.244	.250	
4	.51	.755	14:18	4.67	1.803	.235	[illegible]	[illegible]	.767	3	4.738	.243	.250	
5	.88	.938	14:20	6.17	.833	.234	91	87	.953	3	6.292	.243	.252	
6	.68	.825	[illegible]	8.09	2.190	.234	93	[illegible]	.837	3	8.198	.243	.252	
7	.68	[illegible]	[illegible]	9.78	2.190	.234	95	89	.837	3	9.874	.243	.252	
8	.81	.900	[illegible]26	11.47	2.608	.232	97	89	.9144	3	11.548	.244	.252	
			14:32	13.26							13.377			
1	.57	.755	.50	13.26	1.803	.233	97	90	.767	3		.244	.252	
2	.52	.721	.32	15.01	1.674	.234	98	90	.733	4	14.911	.244	.253	
3	.38	.616	.34	16.41	1.224	.238	100	91	.616	4	16.376	.244	.253	
4	.47	.412	.36	17.62	1.513	.238	100	91	.697	4	17.628	.245	.253	
5	.65	.806	.38	18.97	2.053	.237	102	92	.819	4	19.028	.245	.253	
6	.77	.877	.40	20.61	2.479	.237	102	92	.891	4	20.661	.245	.253	
7	.72	.849	.42	22.38	2.318	.237	103	92	.861	4	22.445	.245	.253	
8	.77	.877	14:44	24.09	2.479	.236	103	92	.8[illegible]	4	24.169	.246	.254	
			14:46	25.88							25.951			

THREE DIMENSION PROBE TEST DATA SHEET

Project#: _____ Date: _____

Sampling Location: _____ Operator: _____

Probe Number: _____ P_{bar}: _____ " Hg

Leak Check: Pre-test: 1 ___ "H_2O 2 ___ "H_2O 3 ___ "H_2O 4 ___ "H_2O Post-test: 1 ✓ "H_2O 2 ✓ "H_2O 3 ✓ "H_2O 4 ✓ "H_2O

System back purged between sampling points: ✓ yes ___ no

TRAVERSE PT.	P_1-ATM	P_1-P_2	P_2-P_3	P_4-P_5	TEMP (°F)	YAW°	DEVIATION	$\frac{P_4-P_5}{P_1-P_2}$	PITCH°	R_1	R_1^2
-1	0.70	0.05	0.0	-0.01	217	5					
-2	0.70	0.05		-0.01	224	8					
-3	0.80	0.15		0.00	224	0					
-4	0.80	0.15		0.00	225	0					
-5	0.80	0.20		0.01	217	-5					
-6	0.90	0.20		0.00	219	-3					
-7	1.00	0.25		0.00	232	0					
-8	1.10	0.50		-0.01	232	-5					
-9	1.10	0.45		-0.01	230	0					
-10	1.10	0.40		-0.01	230	0					
-11	1.00	0.40		-0.01	229	0					
-1	0.90	0.15		-0.01	237	-10					
-2	0.90	0.30		-0.01	231	-10					
-3	0.90	0.35		-0.01	232	-5					
-4	0.95	0.35		-0.01	234	-5					
-5	0.90	0.35		-0.01	236	-5					
-6	0.95	0.35		-0.01	231	0					
-7	0.90	0.30		-0.01	230	-9					
-8	1.00	0.25		-0.01	229	-5					
-9	1.00	0.25		-0.01	232	-3					
-10	1.00	0.20		-0.01	230	-3					
-11	1.10	0.25		-0.01	241	0					
-1	0.95	0.20		-0.01	239	-3					
-2	0.95	0.20		-0.01	231	0					
-3	1.00	0.30		-0.01	232	0					
-4	1.00	0.35		-0.01	230	0					
-5	1.05	0.35		-0.01	229	-3					
-6	1.00	0.35		-0.01	231	0					
-7	0.95	0.35		-0.01	236	-8					
-8	0.90	0.35		-0.01	239	-3					
-9	1.00	0.35		-0.01	239	-3					
-10	1.05	0.35		-0.01	240	-3					
-11	1.00	0.35		0.00	241	-5					
-1	0.95	0.30		-0.01	236	-3					
-2	1.00	0.30		-0.01	237	-8					
-3	1.05	0.35		-0.01	237	-5					
-4	1.00	0.45		-0.01	233	-9					
-5	0.95	0.45		-0.01	231	-5					
-6	1.05	0.60		-0.01	230	-12					
-7	1.00	0.60		-0.01	232	-12					
-8	1.00	0.40		-0.01	232	-10					
-9	0.95	[illegible]		0.00	232	-10					
-10	0.90	0.35		0.01	231	-8					
-11	0.90	0.30		0.01	231	-5					

750 Right most

Left most

CALIBRATION PROCEDURES

PITOT TUBES

The pitot tubes used during this test program are fabricated according to the specification described and illustrated in the Code of Federal Regulations, Title 40, Part 60, Appendix A, Methods 1 through 5 as published in the Federal Register, Volume 42, No. 160; hereafter referred to by the appropriate method number. The pitot tubes comply with the alignment specifications in Method 2, Section 4; and the pitot tube assemblies are in compliance with specifications in the same section.

Pitot tube assemblies are calibrated in accordance with Method 2, Section 4, against a standard hemispherical pitot utilizing a wind tunnel meeting the specification in Method 2, Section 4.1.2.

NOZZLES

The nozzles are measured according to Method 5, Section 5.1.

TEMPERATURE SENSING DEVICES

The potentiometer and thermocouples are calibrated against a mercury thermometer in a calibration well. Alternatively, readings are checked utilizing a NBS traceable millivolt source.

DRY GAS METERS

The test meters are calibrated according to Method 5, Section 5.3 and "Procedures for Calibrating and Using Dry Gas Volume Meters as Calibration Standards" by P.R. Westlin and R.T. Shigehara, March 10, 1978.

ANALYTICAL BALANCE

The accuracy of the analytical balance is checked with Class S, Stainless Steel Type 303 weights manufactured by F. Hopken and Son, Jersey City, New Jersey.

©Mostardi-Platt Associates, Inc.

NOZZLE CALIBRATION

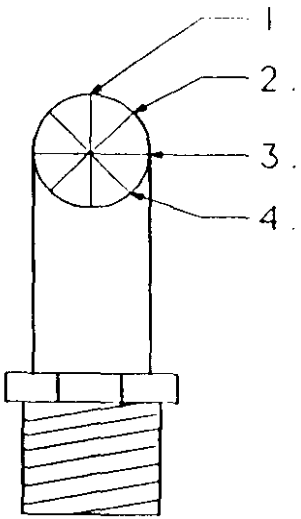

Company _____

Date 5/16/94

Analyst J Crivlare

Nominal Diameter	.150	.175	.200	.220	.250	.275	.300	.375	.500	Other
MEASURED 1.					0.257					
MEASURED 2.					0.257					
MEASURED 3.					0.257					
MEASURED 4.					0.256					
Measured Average					0.257					

MOSTARDI-PLATT ASSOCIATES, INC.

DWG - AN

(Rev. 1/94)

STACK TEMPERATURE SENSOR CALIBRATION DATA FORM

Date 12/28/93 Thermocouple Number E-20

Ambient temperature 66 °F Barometric pressure 29.79 in. Hg

Calibrator A. Negri Reference: mercury-in-glass _____

other _____

Reference point number*	Source† (specify)	Reference thermometer temperature, °F	Thermocouple potentiometer temperature, °F	Temperature difference,‡ %
.372	Millivolt Potentiometer	50	49	0.196
1.52		100	101	0.179
2.666		150	151	0.164
3.819		200	203	0.455
4.964		250	253	0.423
6.092		300	303	0.395
7.205		350	353	0.370
8.314		400	404	0.465
9.43		450	452	0.220
10.56		500	502	0.208
11.702		550	553	0.297
12.857		600	604	0.377
14.013		650	654	0.360
15.178		700	704	0.354
17.523		800	804	0.317
19.883		900	905	0.368
22.251		1000	1006	0.411
24.618		1100	1104	0.256
26.975		1200	1204	0.241

* Every (50°F) for each reference point.

† Type of calibration system used.

$$\left[\frac{(\text{ref temp, °F} + 460) - (\text{test thermom temp, °F} + 460)}{\text{ref temp, °F} + 460}\right] 100 \leq 1.5\%$$

METER BOX CALIBRATION

Dry Gas Meter No.	E20	Date:	10-May-94
Standard Meter No.	677191	Calibrated By:	D.S.BELL
Standard Meter (Yr)	1.0021	Barametric Pressure :	29 40

Run Number		Orifice Setting in H20 Chg (H)	Standard Meter Gas Volume Vr	Dry Meter Gas Volume Vd	Standard Meter Temp. F tr	Dry Gas Meter Inlet Temp. F tdi	Dry Gas Meter Outlet Temp. F tdo	Dry Gas Meter Avg. Temp. F td	Time Min.	Time Sec.	Y	Chg (H@)
Final			77.385	33.455	66	74	71					
Inital			72.214	28.180	66	70	69					
Difference	1	0 13	5.171	5.275	66	72	70	71	25	52	0 989	1.826
Final			84 340	40 611	67	77	73					
Inital			77.700	33.786	66	74	71					
Difference	2	0.34	6.640	6.825	66.5	75.5	72	73.75	20	57	0 985	1 894
Final			96.951	53.621	67	81	75					
Inital			84.851	41 140	67	77	72					
Difference	3	0.62	12.100	12.481	67	79	73.5	76.25	27	57	0.985	1.846
Final			110.644	67.773	68	83	76					
Inital			97.155	53.810	67	80	75					
Difference	4	0.85	13.489	13.963	67.5	81.5	75.5	78.5	27	6	0.984	1 910
Final			122.814	80.377	68	85	77					
Inital			110.825	67.955	68	81	76					
Difference	5	1.10	11 989	12.422	68	83	76.5	79.75	21	23	0.984	1 948
Final			135.777	93.765	69	86	77					
Inital			123.156	80.709	68	81	76					
Difference	6	1.50	12.621	13.056	68 5	83.5	76.5	80	19	12	0.984	1 935
									Average		0.985	1.893

MOSTARDI-PLATT ASSOCIATES, INC.
Environmental Consultants

Analytical Balance Calibration Form

Identification: Torbal Model EA-1, Serial No. 168491
Classification of standard weights: Class S calibrated 5/4/94

Date	Time	100.0000 g	2.0000 g	0.5002 g	Analyst
5.12.94	15:30	100.0001	2.0000	0.5005	E.V.
5.13.94	9:20	100.0000	2.0000	0.5004	E.V.
5.13.94	16:00	100.0001	2.0000	0.5004	E.V.
5.16.94	8:00	100.0000	2.0000	0.5004	E.V.
5-17-94	11:00	100.0001	2.0000	0.5004	TMV
5-17-94	15:10	100.0000	2.0000	0.5005	E.V.
5-18-94	15:45	100.0000	2.0000	0.5005	TMV
5-20-94	9:00	100.0000	2.0000	0.5005	I.P.
5-23-94	9:00	100.0000	2.0000	0.5005	I.P.
5.26.94	10:45	100.0000	2.0000	0.5005	I.P.
5.27.94	11:20	100.0001	2.0000	0.5005	E.V.
5-27-94	4:20	100.0001	2.0000	0.5006	TMV
5.31.94	8:50	100.0000	2.0000	0.5005	E.V.
5-31-94	15:50	100.0000	2.0000	0.5005	TMV
6-1-94	11:00	100.0000	2.0000	0.5005	I.P.
6-1-94	16:00	100.0000	2.0000	0.5005	TMV
6-3-94	3:10	100.0000	2.0000	0.5005	I.P.
6-6-94	9:20	100.0000	2.0000	0.5004	TMV
6-6-94	1:20	100.0000	2.0000	0.5004	TMV
6-7-94	9:10	100.0000	2.0000	0.5005	E.V.
6-8-94	1:15	100.0000	2.0000	0.5004	TMV

Note: Each weight must be within 0.5 mg of the mass obtained after calibration on 5/4/94 to continue analysis.

APPENDIX H

PARTICULATE MATTER ANALYTICAL DATA, FIELD DATA SHEETS AND EQUIPMENT CALIBRATION DATA - POST-LIFAC TESTS

LIFAC NA DEMONSTRATION PROJECT
RICHMOND POWER AND LIGHT
WHITEWATER VALLEY GENERATING UNIT #2

OPERATIONS AND POST-LIFAC TESTS
ENVIRONMENTAL MONITORING REPORT

ICF KAISER ENGINEERS, INC.
PITTSBURGH, PENNSYLVANIA

MOSTARDI-PLATT ASSOCIATES, INC.

M 5

ICF Kaiser

Project/Project Number: RICHMOND Power 43305

Date: 5-23-94 Analyst: ELLEN VOLCJANSKY

Description	Initial Weight	Final Weight	Net Weight Gain
Test # 1 8-16-94			
Filter # 2852	0.7664	0.8494	0.0830
Acetone Wash # 5956-5960 230 ml	7.7711	7.8126	0.0415
Acetone Blank			0.0012
Total Weight			0.1233
Test # 2 8-16-94			
Filter # 2836	0.7678	0.9108	0.1430
Acetone Wash # 6016-6020 150 ml	7.8470	7.9407	0.0937
Acetone Blank			0.0008
Total Weight			0.2359
Test # 3 8-16-94			
Filter # 2963	0.7689	0.8939	0.1250
Acetone Wash # 5976-5980 125 ml	7.7794	7.8822	0.1028
Acetone Blank			0.0006
Total Weight			0.2272
Test #			
Filter #			
Acetone Wash # ml			
Acetone Blank			
Total Weight			
Blank			
Acetone Wash # 6006-6010 100 ml	7.7709	7.7714	0.0005

f:\data\lab\M5.frm

MOSTARDI PLATT ASSOCIATES, INC

TEST SUPPORT DATA

TEST RUN NO. 1

COMPANY Richmond Power & Light
PLANT Richmond, IN
TEST LOCATION Unit #2 Outlet Duct
CLIENT ICF Kaiser Eng.
OPERATOR CT
DATE 8-16-94
CONTROL BOX E-15 POT. NO. E-15
METER NO. E-15
METER CALIBRATION FACTOR .985
PITOT ID NO. –
PITOT TUBE COEFFICIENT .84
PORT LENGTH 27 in.
PORT SIZE 6 in
PORT TYPE FLANGE

IMPINGER H_2O:			SILICA GEL		
FINAL	255	ml/gm	FINAL WT	218.6	gm
INITIAL	200	ml/gm	INITIAL WT	207.4	gm
GAIN	55	ml/gm	WT. GAIN		gm

TOTAL H_2O COLLECTED
DESCRIPTION OF IMPINGER H_2O
SILICA GEL EXHAUSTED ?
IMPINGERS RECOVERED BY
SILICA GEL WEIGHED BY

THIMBLE NO. TARE WT
FILTER NO. 2852 TARE WT 0.1667
BAROMETRIC PRESSURE in. Hg 29.25
FLUE PRESSURE in. H_2O +1.5
FLUE PRESSURE in. Hg ABS. 29.36
PROBE LENGTH 13.5 ft
PROBE LINER MATERIAL 316 SS
NOZZLE IDENTIFICATION NO.
CALIBRATED NOZZLE DIAMETER .192 in
LEAK CHECK PRE 0.013 POST 0.007 @ 15/6 in Hg
DUCT SHAPE Rectangular DIAMETER
DUCT AREA 84 sq ft L 10' 6" W 8'
TEST LENGTH 72 min
MINUTES PER POINT 3
TOTAL NUMBER OF TRAVERSE POINTS 24
GAS ANALYSIS (ORSAT/FYRITE)
CO_2 13.8
O_2 5.0

PITOT LEAK CHECK: PRE ✓ POST
ΔH@ 2"
SAMPLES REMOVED FROM SITE BY

COMMENTS & NOTES:

For computer data entry: Supervisor, please complete.
Do you want to enter a fuel analysis? Y (X) N ( )
What value do you want to use? F = 9,780 F_c = 1,800 Other
Circle to indicate "Yes" or add other value if not given.

126

Form No. 1053 (Rev. 1/94)

FIELD TEST DATA SHEET
FOR ISOKINETIC SAMPLING

MOSTARDI PLATT ASSOCIATES, INC.

PROJECT Richmond Power & Light

TEST RUN NO. 1-1-5

TEST LOCATION Unit #2 Inlet Duct

DATE 8-16-94

PAGE 1 OF 2

Port-Point No.	Velocity Head (P) in. H_2O	$\sqrt{P}$	Clock Time 24 hr.	Meter Volume (Vm) ft^3	Orifice (H) in. H_2O	Stack Temp. (t_s) °F	Meter Temp. (t_m) Inlet °F	Meter Temp. (t_m) Outlet °F	Meter Rate cfm	Pump Vacuum in. Hg	Notes		Probe Temp. °F	Filter Holder Temp. °F	Impgr Outlet Temp.
1-1	1.05	1.025	1220	71.180	1.16	332	86	85	.66	5.0	1.66		246	251	≤ 68°
-2	1.05	1.025	1223	72.84	1.16	322	88	87	.66	5.0	1.66	72.84	252	253	Full
-3	1.05	1.025	1226	74.63	1.16	339	89	88	.66	5.0	1.66	74.50	254	246	Ice
-4	.97	.985	1229	76.20	1.25	338	87	86	.61	5.0	1.60	76.16	257	256	
-5	.97	.985	1232	77.82	1.25	338	87	86	.61	5.0	1.60	77.76	255	257	
-6	.83	.911	1235	79.34	1.07	327	87	85	.59	5.0	1.48	79.36	252	258	
			1238	80.824								80.83			
2-1	.47	.665	1246	80.824	.60	340	87	85	.37	3.0	1.11		268	250	
-2	.67	.831	1243	81.94	.61	340	86	84	.45	3.0	1.35	81.94	267	251	
-3	.78	.883	1248	83.26	.69	340	86	84	.48	3.0	1.43	83.29	264	245	
-4	.83	.911	1249	84.72	.74	341	86	84	.49	3.0	1.48	84.72	258	247	
-5	.96	.980	1252	86.20	.85	339	87	84	.53	3.0	1.59	86.20	252	243	
-6	.88	.938	1255	87.80	.78	339	86	84	.51		1.52	87.79	259	242	
			1258	89.31								89.31			

Form No. 1026 (Rev. 1/94)

127

FIELD TEST DATA SHEET
FOR ISOKINETIC SAMPLING

MOSTARDI PLATT ASSOCIATES, INC.

PROJECT Richmond Power & Light

TEST RUN NO 1-11-5

TEST LOCATION Unit #2 Outlet Duct

DATE: 8-16-94

PAGE 2 OF 2

Port-Point No.	Velocity Head (P) in. H_2O	$\sqrt{P}$	Clock Time 24 hr.	Meter Volume (Vm) ft^3	Orifice (H) in. H_2O	Stack Temp. (t_s) °F	Meter Temp. (t_m) Inlet °F	Meter Temp. (t_m) Outlet °F	Meter Rate cfm	Pump Vacuum in. Hg	x3 Notes		Probe Temp. °F	Filter Holder Temp. °F	Impgr. Outlet Temp.
3-1	.80	.894	1300	89.31	.71	335	86	83	.46	3.0	1.45		268	248	265
-2	.86	.927	1303	90.83	.77	339	87	84	.50	3.0	1.50	90.76	268	254	
-3	.88	.938	1306	92.24	.78	341	87	84	.51	3.0	1.52	92.26	268	256	Icel
-4	.89	.943	1309	93.81	.79	339	87	84	.51	3.0	1.53	93.78	254	250	
-5	.88	.938	1312	95.32	.78	336	87	84	.51	3.0	1.52	95.31	256	253	
-6	.76	.872	1315	96.81	.68	336	87	84	.47	3.0	1.41	96.83	254	250	
			1318	98.24								98.24			
4-1	.68	.825	1320	98.24	.61	328	87	84	.44	3.0	1.34		268	260	
2	.98	.990	1323	99.58	.87	339	86	83	.53	3.0	1.60	99.57	267	260	
-3	1.00	1.000	1326	101.20	.89	339	86	83	.54	3.0	1.62	101.17	258	260	
-4	.92	.959	1329	102.76	.82	339	87	83	.52	3.0	1.55	102.79	258	261	
-5	.83	.911	1332	104.36	.74	340	86	83	.49	3.0	1.47	104.34	253	258	
-6	.62	.787	1335	105.82	.55	336	86	83	.43		1.28	105.82	256	250	
			1338	107.10								107.0			
				35.92											

1.28

Form No. 1026 [Rev. 1/94]

MOSTARDI PLATT ASSOCIATES INC

TEST SUPPORT DATA

TEST RUN NO 2-M-5

COMPANY Richmond Power & Light
PLANT Richmond, IN
TEST LOCATION Unit #2 Outlet Duct
CLIENT JLF Kaiser Eng.
OPERATOR CT
DATE 8-16-94
CONTROL BOX C-15 POT NO C-15
METER NO. C-15
METER CALIBRATION FACTOR .985
PITOT ID NO.
PITOT TUBE COEFFICIENT .84
PORT LENGTH 27 in
PORT SIZE 6 in
PORT TYPE FLANGE

IMPINGER H_2O: SILICA GEL.
FINAL 314 ml/gm FINAL WT 232.8 gm
INITIAL 200 ml/gm INITIAL WT 212.6 gm
GAIN ml/gm WT. GAIN gm
TOTAL H_2O COLLECTED
DESCRIPTION OF IMPINGER H_2O
SILICA GEL EXHAUSTED ?
IMPINGERS RECOVERED BY
SILICA GEL WEIGHED BY

COMMENTS & NOTES:

THIMBLE NO TARE WT
FILTER NO 2836 TARE WT 0.7678
BAROMETRIC PRESSURE in. Hg 29.25
FLUE PRESSURE in. H_2O 1.50
FLUE PRESSURE in. Hg ABS. 29.36
PROBE LENGTH 13.5 ft
PROBE LINER MATERIAL 316 S.S
NOZZLE IDENTIFICATION NO
CALIBRATED NOZZLE DIAMETER .260 in
LEAK CHECK PRE 0.013 POST 0.008 @12/7 in Hg
DUCT SHAPE Rectangular DIAMETER
DUCT AREA 84' sq ft L 10'6" W 8'
TEST LENGTH 72 min
MINUTES PER POINT 3
TOTAL NUMBER OF TRAVERSE POINTS 24
GAS ANALYSIS (ORSAT/FYRITE)
CO. 13.8
O. 5.1

PITOT LEAK CHECK: PRE ✓ POST ✓
ΔH@
SAMPLES REMOVED FROM SITE BY

For computer data entry: Supervisor, please complete.
Do you want to enter a fuel analysis? Y ☒ N ☐
What value do you want to use? F = 9,780 F_c = 1,800 Other
Circle to indicate "Yes" or add other value if not given.

129

Form No 1053 [Rev 1 94]

FIELD TEST DATA SHEET
FOR ISOKINETIC SAMPLING

MOSTARDI PLATT ASSOCIATES, I

PROJECT Richmond Power & Light

TEST RUN NO. 2-M-5

TEST LOCATION Unit 2 Outlet Duct

DATE: 8-16-94

PAGE 1 OF 2

Port-Point No.	Velocity Head (P) in. H_2O	$\sqrt{P}$	Clock Time 24 hr.	Meter Volume (Vm) ft^3	Orifice (H) in. H_2O 2.95	Stack Temp. (t_s) °F	Meter Temp. (t_m) Inlet °F	Meter Temp. (t_m) Outlet °F	Meter Rate cfm .76	Pump Vacuum in. Hg	Notes X3		Probe Temp. °F	Filter Holder Temp. °F	Impgr. Outlet Temp.
1-1	.60	.775	1430	7.428	1.77	334	84	83	.76	5.0	2.27		259	264	≤65°
-2	.72	.849	1433	9.65	2.12	341	84	83	.83	6.0	2.49	9.71	268	266	Full
-3	.63	.794	1436	12.18	1.86	341	85	83	.78	6.0	2.33	12.20	264	263	Icing
-4	.60	.775	1439	14.54	1.77	340	85	83	.76	6.0	2.27	14.53	263	258	
-5	.73	.854	1442	16.63	2.15	343	85	83	.84	6.0	2.51	16.80	258	256	
-6	.73	.854	445	19.31	2.15	340	86	83	.84	6.0	2.51	19.31	253	254	
			1448	21.62								21.62			
2-1	.76	.863	1450	21.62	2.30	341	86	83	.87	6.0	2.60		258	252	
-2	.70	.837	1453	24.42	2.07	342	87	84	.82	6.0	2.46	24.42	259	254	
-3	.73	.854	1456	26.89	2.15	342	88	85	.84	6.0	2.51	26.88	258	256	
-4	.73	.854	1459	29.46	2.15	343	88	85	.84	6.0	2.51	29.39	263	261	
-5	.69	.831	1502	31.80	2.04	343	89	85	.81	6.0	2.44	31.80	261	262	
-6	.73	.854	1505	34.33	2.15	343	90	86	.81	6.0	2.51	34.34	263	264	
			1508	36.85								36.85			

Form No. 1026 (Rev. 1/94)

FIELD TEST DATA SHEET
FOR ISOKINETIC SAMPLING

MOSTARDI PLATT ASSOCIATES, INC.

PROJECT Richmond Power & Light

TEST RUN NO #2 M-5

TEST LOCATION Unit #2 outlet Duct

DATE 8-16-94

PAGE 2 OF 2

Port-Point No.	Velocity Head (P) in. H_2O	$\sqrt{P}$	Clock Time 24 hr.	Meter Volume (Vm) ft^3	Orifice 2.95 (H) in. H_2O	Stack Temp. (t_s) °F	Meter Temp. (t_m) Inlet °F	Meter Temp. (t_m) Outlet °F	Meter .98 Rate cfm	Pump Vacuum in. Hg	x 3 Notes		Probe Temp. °F	Filter Holder Temp. °F	Impgr. Outlet Temp.
3-1	.67	.794	1510	36.85	1.66	341	90	86	.76	5.0	2.33		263	258	≤68
-2	.78	.883	1513	39.18	2.30	342	91	86	.87	5.0	2.60	39.18	258	264	Full
-3	.83	.911	1516	41.78	2.45	342	92	87	.89	5.0	2.68	41.78	258	261	Ice
-4	.80	.894	1519	44.46	2.36	340	92	87	.88	5.0	2.63	44.46	259	263	
-5	.78	.883	1522	47.09	2.30	341	92	87	.87	5.0	2.60	47.09	258	261	
-6	.68	.825	1525	49.66	2.01	340	92	87	.81	5.0	2.42	49.69	256	260	
			1528	52.11								52.11			
4-1	.68	.825	1530	52.11	2.01	338	92	87	.81	5.0	2.42		254	261	
-2	.76	.872	1533	54.53	2.24	338	93	88	.85	5.0	2.56	54.53	258	259	
-3	.76	.872	1536	57.09	2.24	338	93	88	.85	5.0	2.56	57.09	258	263	
-4	.73	.854	1539	59.63	2.15	338	93	88	.84	5.0	2.51	59.65	260	259	
-5	.56	.748	1542	62.12	1.65	338	93	88	.73	5.0	2.20	62.14	268	259	
-6	.50	.707	1545	64.38	1.48	331	93	88	.693	5.0	2.08	64.34	264	258	
			1548	66.420								66.42			
				58.992											

131

Form No. 1026 (Rev. 1/94)

MOSTARDI PLATT ASSOCIATES, INC

TEST SUPPORT DATA

TEST RUN NO 3-M-5

COMPANY Richmond Power & Light
PLANT Richmond, IN
TEST LOCATION Unit #1 Outlet Duct
CLIENT Jeff Kaiser Eng.
OPERATOR CT
DATE 8-16-94
CONTROL BOX E-15 POT. NO E-15
METER NO. E-15
METER CALIBRATION FACTOR .985
PITOT ID NO. —
PITOT TUBE COEFFICIENT .84
PORT LENGTH 27 in
PORT SIZE 6 in
PORT TYPE Flange

IMPINGER H_2O: SILICA GEL
FINAL 298 ml/gm FINAL WT. 218.0 gm
INITIAL 200 ml/gm INITIAL WT 202.9 gm
GAIN ml/gm WT. GAIN gm
TOTAL H_2O COLLECTED
DESCRIPTION OF IMPINGER H_2O
SILICA GEL EXHAUSTED ?
IMPINGERS RECOVERED BY
SILICA GEL WEIGHED BY

COMMENTS & NOTES:

THIMBLE NO TARE WT
FILTER NO. 2963 TARE WT 0.7689
BAROMETRIC PRESSURE in. Hg 29.25
FLUE PRESSURE in. H_2O +1.50
FLUE PRESSURE in. Hg ABS. 29.36
PROBE LENGTH 13.5 ft
PROBE LINER MATERIAL 316 SS
NOZZLE IDENTIFICATION NO.
CALIBRATED NOZZLE DIAMETER .260 in
LEAK CHECK PRE 0.0 POST 0.0 @ 1 in Hg
DUCT SHAPE Rectangular DIAMETER
DUCT AREA 84 sq ft L 14'6" W
TEST LENGTH 72 min
MINUTES PER POINT 3
TOTAL NUMBER OF TRAVERSE POINTS 27
GAS ANALYSIS (ORSAT/FYRITE):
CO. 13.8
O_2 5.4

PITOT LEAK CHECK: PRE ✓ POST ✓
ΔH@
SAMPLES REMOVED FROM SITE BY

For computer data entry: Supervisor, please complete.
Do you want to enter a fuel analysis? Y X N
What value do you want to use? F = 9,780 F_c = 1,800 Other
Circle to indicate "Yes" or add other value if not given.

Form No. 1053 (Rev. 1/93)

FIELD TEST DATA SHEET
FOR ISOKINETIC SAMPLING

MOSTARDI PLATT ASSOCIATES, INC.

PROJECT Richmond Power & Light

TEST RUN NO 3-1-5

TEST LOCATION Unit #2 Outlet Duct

DATE 8-16-94

PAGE 1 OF 2

Port-Point No.	Velocity Head (P) in. H_2O	$\sqrt{P}$	Clock Time 24 hr.	Meter Volume (Vm) ft^3	Orifice (H) 2.19 in. H_2O	Stack Temp. (t_s) °F	Meter Temp. (t_m) Inlet °F	Meter Temp. (t_m) Outlet °F	Meter Rate 1.00 cfm	Pump Vacuum in. Hg	X3 Notes		Probe Temp. °F	Filter Holder Temp. °F	Impgr Outlet Temp.
1-1	.68	.825	1635	66.846	2.03	334	87	87	.82	6.0	2.47		268	243	≤68°
-2	.54	.735	1638	69.30	1.61	336	88	87	.73	6.0	2.20	69.32	269	264	Full
-3	.68	.825	1641	71.46	2.03	333	88	87	.82	6.0	2.47	71.52	267	263	Test
-4	.79	.889	1644	73.89	2.36	333	89	87	.89	6.0	2.67	73.99	255	253	
-5	.87	.933	1647	76.63	2.60	332	90	88	.93	6.0	2.80	76.66	254	251	
-6	.63	.794	1650	79.44	1.88	332	90	88	.79	6.0	2.30	79.46	256	250	
			1653	81.64								81.64			
2-1	.82	.906	1654	81.64	2.45	331	93	88	.91	6.0	2.72		260	263	
-2	.77	.877	1657	84.53	2.31	333	93	88	.91	6.0	2.63	84.56	262	265	
-3	.70	.836	1700	87.19	2.09	335	93	87	.84	7.0	2.51	87.19	264	253	
-4	.63	.794	1703	89.70	1.86	335	93	88	.79	7.0	2.30	89.70	263	254	
-5	.86	.927	1706	92.03	2.57	335	94	88	.93	7.0	2.78	92.00	262	253	
-6	.80	.894	1709	94.78	2.39	335	94	88			2.68	94.78	249	260	
			1712	97.46								97.46			

Form No 1026 [Rev 1/94]

FIELD TEST DATA SHEET
FOR ISOKINETIC SAMPLING

MOSTARDI PLATT ASSOCIATES, INC.

PROJECT Richmond Power & Light

TEST RUN NO. 3-M5

TEST LOCATION UNIT #2 OUTLET DUCT

DATE: 8-16-94

PAGE: 2 OF 2

Port-Point No.	Velocity Head (P) in. H_2O	$\sqrt{P}$	Clock Time 24 hr.	Meter Volume (Vm) ft^3	Orifice (H) 2.99 in. H_2O	Stack Temp. (t_s) °F	Meter Temp. (t_m) Inlet °F	Meter Temp. (t_m) Outlet °F	Meter Rate (1.000) cfm	Pump Vacuum in. Hg	x 3 Notes		Probe Temp. °F	Filter Holder Temp. °F	Impgr. Outlet Temp.
3-1	.84	.917	1713	97.46	2.51	334	92	88	.92	7.0	2.75		258	263	69°
-2	.81	.917	1716	100.19	2.51	335	92	88	.92	8.0	2.75	100.21	256	261	
-3	.58	.762	1719	102.94	1.73	338	93	88	.76	8.0	2.28	102.96	266	264	
-4	.52	.721	1721	103.24	1.55	337	93	88	.72	6.0	2.16	105.24	266	261	
-5	.70	.837	1724	105.44	2.09	336	93	88	.84	6.0	2.51	105.46	248	250	
-6	.64	.800	1727	107.93	1.91	336	92	87	.80	6.0	2.40	107.91	246	259	
			1730	110.32								110.31			
4-1	.71	.843	1731	110.32	2.12	334	92	86	.84	6.0	2.53		256	251	
-2	.72	.849	1734	112.61	2.15	336	93	86	.85	6.0	2.55	112.64	257	254	
-3	.61	.800	1737	115.34	1.91	337	93	86	.80	6.0	2.40	115.35	263	262	
-4	.66	.812	1740	117.79	1.97	337	93	86	.81	6.0	2.44	117.79	261	260	
-5	.58	.762	1743	120.24	1.73	337	92	87	.76	6.0	2.28	120.23	245	260	
-6	.50	.707	1746	122.51	1.50	337	92	87	.71	6.0	2.12	122.51	255	258	
			1749	124.629								124.63			
				57.783											

Form No. 1026 [Rev. 1/94]

134

CALIBRATION PROCEDURES

PITOT TUBES

The pitot tubes used during this test program are fabricated according to the specification described and illustrated in the Code of Federal Regulations, Title 40, Part 60, Appendix A, Methods 1 through 5 as published in the Federal Register, Volume 42, No. 160; hereafter referred to by the appropriate method number. The pitot tubes comply with the alignment specifications in Method 2, Section 4; and the pitot tube assemblies are in compliance with specifications in the same section.

Pitot tube assemblies are calibrated in accordance with Method 2, Section 4, against a standard hemispherical pitot utilizing a wind tunnel meeting the specification in Method 2, Section 4.1.2.

NOZZLES

The nozzles are measured according to Method 5, Section 5.1.

TEMPERATURE SENSING DEVICES

The potentiometer and thermocouples are calibrated against a mercury thermometer in a calibration well. Alternatively, readings are checked utilizing a NBS traceable millivolt source.

DRY GAS METERS

The test meters are calibrated according to Method 5, Section 5.3 and "Procedures for Calibrating and Using Dry Gas Volume Meters as Calibration Standards" by P.R. Westlin and R.T. Shigehara, March 10, 1978.

ANALYTICAL BALANCE

The accuracy of the analytical balance is checked with Class S, Stainless Steel Type 303 weights manufactured by F. Hopken and Son, Jersey City, New Jersey.

METER BOX CALIBRATION

Dry Gas Meter No.	E15	Date:	17-Jun-94
Standard Meter No.	677191	Calibrated By:	G.ROCK
Standard Meter (Yr)	1.0021	Barametric Pressure :	29.56

Run Number		Orifice Setting in H20 Chg (H)	Standard Meter Gas Volume Vr	Dry Meter Gas Volume Vd	Standard Meter Temp. F tr	Dry Gas Meter Inlet Temp. F tdi	Dry Gas Meter Outlet Temp. F tdo	Dry Gas Meter Avg. Temp. F td	Time Min.	Time Sec.	Y	Chg (Hug)
Final			239.097	452.366	83	95	91					
Inital			231.300	444.278	82	93	87					
Difference	1	0.11	7.797	8.088	82.5	94	89	91.5	41	0	0.980	1.740
Final			246.292	459.800	83	95	91					
Inital			239.430	452.705	83	92	91					
Difference	2	0.31	6.862	7.095	83	93.5	91	92.25	22	0	0.983	1.823
Final			258.575	472.502	84	97	93					
Inital			246.568	460.097	83	93	91					
Difference	3	0.61	12.007	12.405	83.5	95	92	93.5	28	0	0.984	1.897
Final			276.092	490.596	85	99	95					
Inital			258.921	472.846	84	97	93					
Difference	4	0.81	17.171	17.750	84.5	98	94	96	35	0	0.986	1.923
Final			302.464	517.791	86	101	95					
Inital			276.469	490.987	85	99	95					
Difference	5	1.10	25.995	26.804	85.5	100	95	97.5	45	0	0.988	1.886
Final			319.030	534.839	86	102	96					
Inital			302.842	518.174	86	101	95					
Difference	6	1.40	16.188	16.665	86	101.5	95.5	98.5	25	0	0.990	1.910
									Average		0.985	1.863

mostardi-platt associates.

PITOT TUBE CALIBRATION DATA

Calibration pitot tube: type STND HEMI size (OD) .250 ID number S-1

Type S pitot tube ID number 17 $C_{p(std)}$ = 0.99

Calibration: date 1-31-92 performed by DB, RP

A-Side Calibration

Δp_{std}, (in.) H_2O	Δp_s, (in.) H_2O	$C_{p(S)}$ [a]	DEV.[b]
.190	.265	.838	0.002
0.425	0.590	0.840	0.0
0.675	0.938	0.840	0.0
1.63	2.27	0.839	0.001
2.35	3.26	0.841	0.001
Average		0.840	

B-Side Calibration

Δp_{std}, (in.) H_2O	Δp_s, (in.) H_2O	$C_{p(S)}$ [a]	DEV.[b]
.190	.268	.834	0.0
0.675	0.953	0.833	0.001
1.35	1.90	0.834	0.0
2.50	3.53	0.833	0.001
3.60	5.05	0.836	0.002
Average		0.834	

[a] $C_{p(S)} = C_{p(std)} \sqrt{\frac{\Delta p_{std}}{\Delta p_s}}$ = _____

[b] DEV = $C_{p(S)} - \bar{C}_p$, (must be ≤ 0.01)

$\bar{C}_p(A) - \bar{C}_p(B)$ = _____ (must be ≤ 0.01).

TYPE S PITOT TUBE INSPECTION DATA FORM

Pitot tube assembly level? ✓ yes _____ no

Pitot tube openings damaged? _____ yes (explain below) ✓ no

α_1 = 0 ° (<10°), α_2 = 1 ° (<10°)

β_1 = 1 ° (<5°), β_2 = 0 ° (<5°)

γ = 0 °, θ = 0 °, A = .90[illegible] (in.)

z = A sin γ = 0 (in.); (<0.125 in.)

w = A sin θ = 0 (in.); (<0.03125 in.)

P_A = .451 (in.), P_B = [illegible] (in.), D_t = .250 (in.)

Comments: Stainless steel - D[illegible] 15"

A - 0.840

B - 0.834

Calibration required? _____ yes _____ no

PITOT TUBE # 17 DATE 1-22-[illegible] NAME [illegible] TR

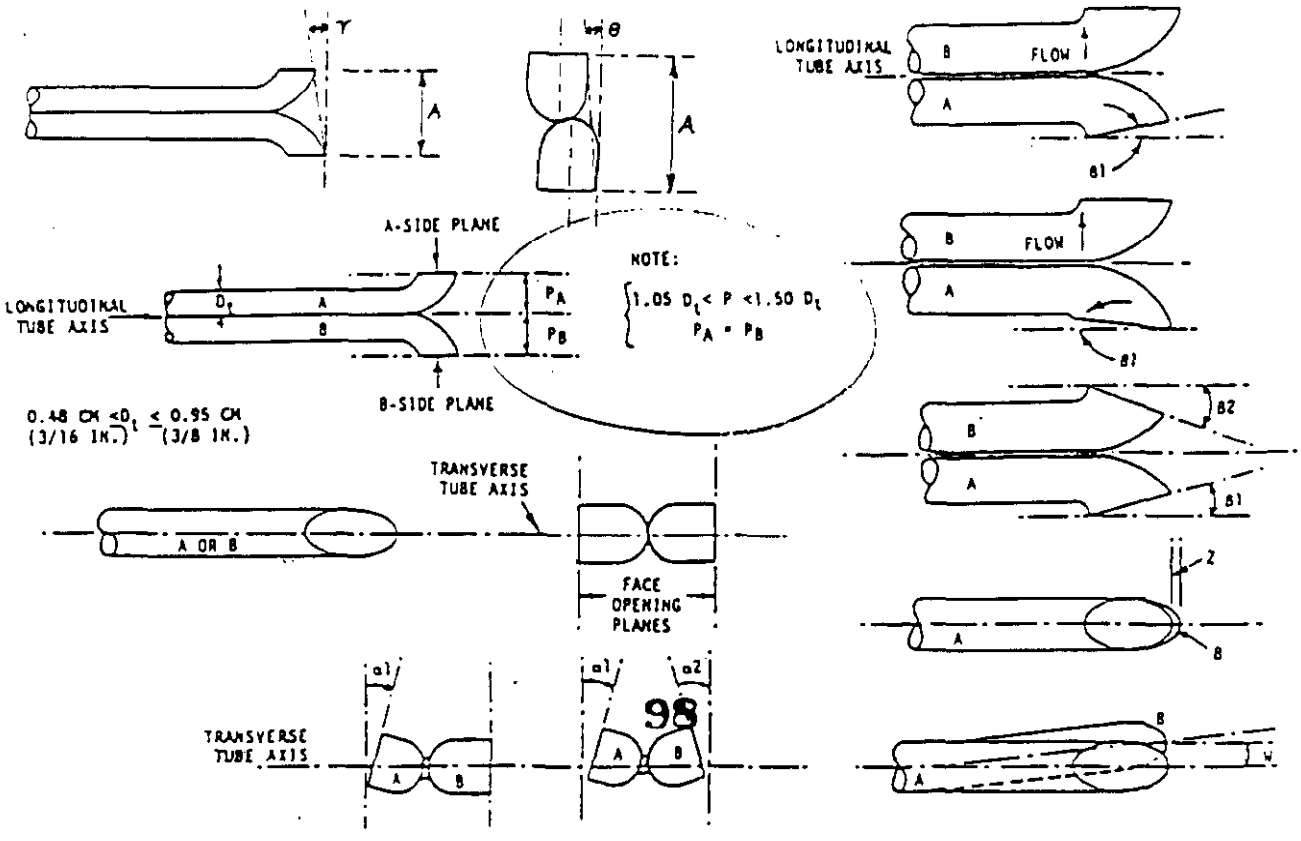

STACK TEMPERATURE SENSOR CALIBRATION DATA FORM

Date 1-13-94 Thermocouple Number E15

Ambient temperature 59° °F Barometric pressure 29.15 in. Hg

Calibrator A NEGRI Reference: mercury-in-glass ASTM-1F

other

Reference point number[a]	Source[b] (specify)	Reference thermometer temperature, °F	Thermocouple potentiometer temperature, °F	Temperature difference,[c] %
.372	MILLIVOLT POTENTIOMETER	50	50°	0
1.52		100	102	.357
2.666		150	152	.328
3.819		200	203	.455
4.964		250	255	.704
6.092		300	304	.526
7.205		350	354	.494
8.314		400	403	.349
9.43		450	453	.330
10.56		500	503	.313
11.702		550	554	.396
12.854		600	605	.472
14.013		650	655	.450
15.178		700	705	.431
17.523		800	803	.238
19.883		900	904	.294
22.251		1000	1005	.342
24.618		1100	1105	.321
26.975		1200	1205	.301

[a] Every (50°F) for each reference point.

[b] Type of calibration system used.

[c] $\left[\frac{(\text{ref temp, °F} + 460) - (\text{test thermom temp, °F} + 460)}{\text{ref temp, °F} + 460}\right] 100 \leq 1.5\%$

NOZZLE CALIBRATION

Company RPdL

Date 8/17

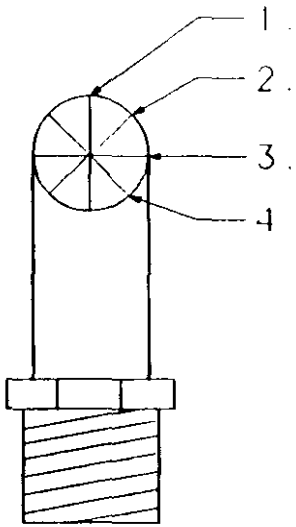

Analyst _____

Nominal Diameter	.150	.175	.200	.220	.250	.275	.300	.375	.500	Other
MEASURED 1.			.197	.225	.760	.281				
MEASURED 2.			.193	.225	.760	.281				
MEASURED 3.			.197	.225	.760	.281				
MEASURED 4.			.197	.225	.760	.357				
Measured Average										

MOSTARDI-PLATT ASSOCIATES, INC.

DWG - AN

[Rev. 1/94]

MOSTARDI-PLATT ASSOCIATES, INC.

Environmental Consultants

Analytical Balance Calibration Form

Identification: Torbal Model EA-1, Serial No. 168491
Classification of standard weights: Class S calibrated 11/6/92

Date	Time	~~100.0003~~ 99.9999 g	2.0001 g	0.5002 g	Analyst
11. 22. 93	14:20	100.0002	2.0000	0.5005	E.V.
11, 23. 93	11:40	100.0002	2.0000	0.5005	E.V.
11/24/93	7:45	100.0000	2.0000	0.5004	DJS
11/26/93	7:50	100.0002	2.0000	0.5006	DJS
11.29.93	10:10	100.0003	2.0000	0.5004	E.V.
11/29/93	12:00	100.0003	2.0000	0.5005	DJS
11/29/93	1430	100.0003	2.0000	0.5005	DJS
11.30.93	12:00	100.0003	2.0000	0.5005	E.V.
12.2.93	14:00	100.0003	2.0000	0.5004	E.V.
12-2-93	8:15	100.0002	2.0000	0.5004	DJS
12-3-93	12 05	100.0002	2.0000	0.5004	DJS
12.3.93	3:30.	100.0002	2.0000	0.5005	I.P.
12.6.93	8:10	100.0002	2.0000	0.5003	E.V.
12.6.93	2:35	100.0002	2.0000	0.5005	I.P.
12.7.93	11:00	100.0001	2.0000	0.5005	E.V.
12.9.93	9:00	100.0003	2.0000	0.5005	E.V.
12.10.93	9:45	100.0003	2.0000	0.5005	I.P.
12-13-93	7:00	100.0003	2.0000	0.5005	DJS,
12-13-93	9:15	100.0001	2.0000	0.5005	I.P.
12.14.93	1:50	100.0001	2.0000	0.5005	I.P.
12-15-93	1145	100.0002	2.0000	0.5005	DJS

Note: Each weight must be within 0.5 mg of the mass obtained after calibration on ~~11/6/92~~ 11/9/93 to continue analysis.