EVALUATION OF MERCURY EMISSIONS FROM COAL-FIRED FACILITIES WITH SCR AND FGD SYSTEMS

Topical Report No. 6

U.S. DOE NETL Cooperative Agreement DE-FC26-02NT41589

Issued: October 2005

J. A. Withum
S. C. Tseng
J. E. Locke

CONSOL Energy Inc.,
Research & Development
4000 Brownsville Rd.
South Park, PA 15129
(412) 854-6600

DISCLAIMER

This report was prepared as an account of work sponsored by an agency of the United States Government. Neither the United States Government nor any agency thereof, nor any of their employees, makes any warranty, express or implied, or assumes any legal liability or responsibility for the accuracy, completeness, or usefulness of any information, apparatus, product, or process disclosed, or represents that its use would not infringe privately owned rights. Reference herein to any specific commercial product, process, or service by trade name, trademark, manufacturer, or otherwise does not necessarily constitute or imply its endorsement, recommendation, or favoring by the United States Government or any agency thereof. The views and opinions of authors expressed herein do not necessarily state or reflect those of the United States Government or any agency thereof.

ABSTRACT

CONSOL Energy Inc., Research & Development (CONSOL), with support from the U.S. Department of Energy, National Energy Technology Laboratory (DOE) is evaluating the effects of selective catalytic reduction (SCR) on mercury (Hg) capture in coal-fired plants equipped with an electrostatic precipitator (ESP) - wet flue gas desulfurization (FGD) combination or a spray dyer absorber – fabric filter (SDA-FF) combination. In this program CONSOL is to determine mercury speciation and removal at 10 coal-fired facilities. The objectives are 1) to evaluate the effect of SCR on mercury capture in the ESP-FGD and SDA-FF combinations at coal-fired power plants, 2) evaluate the effect of catalyst degradation on mercury capture; 3) evaluate the effect of low load operation on mercury capture in an SCR-FGD system, and 4) collect data that could provide the basis for fundamental scientific insights into the nature of mercury chemistry in flue gas, the catalytic effect of SCR systems on mercury speciation and the efficacy of different FGD technologies for mercury capture.

This document, the sixth in a series of topical reports, describes the results and analysis of mercury sampling performed on a 1,300 MW unit burning a bituminous coal containing an average of 3.7 percent sulfur. The unit is equipped with SCR, ESP, and FGD to control NO_x, particulate, and SO_2 emissions, respectively. Four sampling tests were performed during the week of August 30, 2004. Flue gas mercury speciation and concentrations were determined at the SCR inlet, SCR outlet, air heater outlet (ESP inlet), and at the stack (FGD outlet) using the Ontario Hydro method. Coinciding with the flue gas measurements, process stream samples were collected to calculate the mercury balance.

The results show that the SCR/air heater combination converted 98% of the elemental mercury to the oxidized and particulate forms. Mercury removal, on a coal-to-stack basis, was 90%. The mercury material balance closures for the four tests ranged from 76% to 104%, with an average of 88%.

These results show that the SCR had a positive effect on mercury oxidation. In earlier programs, CONSOL sampled mercury at six plants with wet FGDs for SO_2 control without SCR catalysts. At those plants, an average of 61±15% of the mercury was in the oxidized and particulate forms at the air heater outlet, and the average coal-to-stack mercury removal was 66±8%.

The principal purpose of this work is to develop a better understanding of the potential mercury removal "co-benefits" achieved by NOx, and SO_2 control technologies. It is expected that this data will provide the basis for fundamental scientific insights into the nature of mercury chemistry in flue gas, the catalytic effect of SCR systems on mercury speciation and the efficacy of different FGD technologies for mercury capture. Ultimately, this insight could help to design and operate SCR and FGD systems to maximize mercury removal.

TABLE OF CONTENTS

Page
ABSTRACT ii
LIST OF FIGURES iv
LIST OF TABLES v
LIST OF APPENDICES vi
LIST OF ABBREVIATIONS vii
INTRODUCTION 1
HOST UTILITY DESCRIPTION 2
MERCURY SAMPLING RESULTS 2
I. Test Matrix 2
II. Flue Gas Mercury Sampling Results 2
A. SCR Inlet 3
B. SCR Outlet 3
C. Air Heater Outlet 4
D. Stack 5
III. SCR/FGD System Hg Removal 6
IV. Mercury Material Balance 7
EXPERIMENTAL AND SAMPLING METHODS 7
I. Flue Gas Sampling Locations and Sampling Points 7
A. SCR Inlet 8
B. SCR Outlet 8
C. Air Heater Outlet (ESP Inlet) 9
D. Stack (FGD Outlet) 9
II. Flue Gas Mercury Measurements 9
III. Coal Sampling and Analysis 11
A. Coal Samples 11
B. Summary of the Results of Coal Analyses 11
IV. Process Sample Collection 12
A. Bottom Ash 13
B. Mill Rejects 13
C. ESP Ash 14
D. Lime Slurry Samples 20
E. FGD Slurry 21
F. FGD Makeup Water Samples 24
G. Trona 25
H. Urea 26
QUALITY ASSURANCE/QUALITY CONTROL 27
I. Blank Samples 28
II. NIST SRM Checks 28
III. Spike Sample Recoveries 28
IV. Duplicate Analyses 28
V. Flue Gas Mercury Concentration Detection Limits 29
VI. Mercury Material Balance Closure 30
A. Mercury Input from Coal 30
B. Mercury Input from Lime Slurry 30

C. Mercury Input from FGD Makeup Water 31
D. Mercury Output via Bottom Ash 33
E. Mercury Output via ESP Hopper Ash 34
F. Mercury Output via FGD Slurry 34
G. Mercury Output via Stack Flue Gas 35
H. Stack Mercury Emission 35
I. Material Balance Closure for Mercury 36
J. Material Balance Closure for SiO_2, Al_2O_3 and CaO 36

LIST OF FIGURES

Page
Figure 1. Mercury Speciation. 40
Figure 2. Process Flow Schematic 41
Figure 3. SCR Inlet Mercury Sampling Train 42
Figure 4. SCR Outlet Mercury Sampling Train 42
Figure 5. Air Heater Outlet Mercury Sampling Train 43
Figure 6. Stack mercury Sampling Train 44
Figure 7. Ontario-Hydro Sampling Train Schematic 45
Figure 8. Layout of ESP Ash Hoppers 46
Figure 9. ESP hopper ash sampling 47
Figure 10. Mercury Concentration vs. Carbon Content in Baghouse Ash Samples 48
Figure 11. FGD slurry sampling location 49

LIST OF TABLES

Table 1. Coal-fired Facilities in Program 1
Table 2. Sampling Test Matrix 2
Table 3. Flue Gas Hg Speciation at the SCR Inlet 3
Table 4. Flue Gas Hg Speciation at the SCR Outlet 4
Table 5. Flue Gas Hg Speciation at the Air Heater Outlet 5
Table 6. Flue Gas Hg Speciation at the Stack 6
Table 7. Flue Gas Mercury Removal 6
Table 8. Mercury Material Balance. 7
Table 9. Mercury Speciation by Train Component 10
Table 10. List of Coal Samples 11
Table 11. Results of Analysis of Coal Samples. 12
Table 12. Results of Analyses of Bottom Ash Samples 13
Table 13. Results of Analyses of Mill Reject Samples 14
Table 14. Results of Analyses of ESP Hopper Ash Samples Collected in Test 1. 16
Table 15. Results of Analyses of ESP Hopper Ash Samples Collected in Test 2. 17
Table 16. Results of Analyses of ESP Hopper Ash Samples Collected in Test 3. 18
Table 17. Results of Analyses of ESP Hopper Ash Samples Collected in Test 4. 19
Table 18. Lime Slurry Samples. 20
Table 19. Results of Analyses of Lime Slurry Solids Samples 20
Table 20. Results of Analyses of Lime Slurry Filtrate Samples 21
Table 21. List of FGD Slurry Samples. 22
Table 22. Results of Analyses of FGD Slurry Solids Samples. 23
Table 23. Results of Analyses of FGD Slurry Filtrate Samples. 24
Table 24. List of FGD Makeup Water Samples. 24
Table 25. Results of Analyses of FGD Makeup Water Samples 25
Table 26. Results of Analyses of Trona Samples 26
Table 27. List of Urea Samples. 26
Table 28. Results of Analysis of Urea Samples. 27
Table 29. NIST SRM Analyses 28
Table 30. Flue Gas Hg Detection Limits 30
Table 31. Mercury Input from Coal 30
Table 32. Mercury Input from Lime Slurry 31
Table 33. Mercury Input from FGD Makeup Water 33
Table 34. Mercury Output via Bottom Ash 33
Table 35. Mercury Output via ESP Hopper Ash 34
Table 36. Mercury Output via FGD Slurry 35
Table 37. Mercury Output via Stack Flue Gas 35
Table 38. Stack Mercury Emission 35
Table 39. Summary of Material Balance Closure for Hg. 36
Table 40. Summary of Material Balance Closure for SiO_2. 37
Table 41. Summary of Material Balance Closure for Al_2O_3. 37
Table 42. Summary of Material Balance Closure for CaO. 38
Table 43. SO2 Removal Efficiency by FGD 39

LIST OF APPENDICES

APPENDIX A	Mercury Sampling Data	A-1
APPENDIX B	Plant Process Data	B-1
APPENDIX C	Flue Gas Hg Data	C-1
APPENDIX D	Process Material Data	D-1

LIST OF ABBREVIATIONS

acfm	-	actual cubic feet per minute (wet)
am	-	morning
Btu	-	heating value in British Thermal Units
Ca/S	-	Calcium-sulfur ratio
cfm	-	cubic feet per minute
CO_2	-	carbon dioxide
CONSOL R&D	-	CONSOL Energy Inc., Research and Development
CVAA	-	cold vapor atomic absorption
DI	-	deionized water
dscf	-	dry standard cubic feet
dscfm	-	dry standard cubic feet per minute
dscm	-	dry standard cubic meter
EPA	-	U.S. Environmental Protection Agency
ESP	-	electrostatic precipitator
FGD	-	wet flue gas desulphurization
ft	-	feet
ft^2	-	square feet
ft^3	-	cubic feet
gal	-	gallon
gm	-	grams
gpm	-	gallons per minute
gr	-	grains
HCl	-	hydrochloric acid
Hg	-	mercury
Hg^{part}	-	mercury in particulate form
Hg^{total}	-	total mercury in particulate, oxidized, and elemental forms
Hg^{++}	-	mercury in oxidized form
Hg^{o}	-	mercury in elemental form
HNO_3	-	nitric acid
H_2O	-	water
hr	-	hour
Ib/TBtu	-	pound per trillion (10^{12}) British Thermal Unit
Ib/hr	-	pound per hour
ICP-AES	-	inductively coupled plasma-atomic emission spectrometer
in	-	inch
KCl	-	potassium chloride
$KMnO_4$	-	potassium permanganate
kpph	-	thousand pound per hour
L	-	liter
lb	-	pound
m	-	meter
m^3	-	cubic meter
mg	-	milligram, 10^{-3} gram

LIST OF ABBREVIATIONS (continued)

min	-	minute
mL	-	milliliter
M	-	molar, mol/L
MM	-	million
mol	-	mole
ng	-	nanogram, 10^{-9} gram
N_2	-	molecular nitrogen
NIST	-	National Institute of Standards and Technology
NO	-	nitric oxide
NO_2	-	nitrogen dioxide
O_2	-	molecular oxygen
O_3	-	ozone
pm	-	afternoon
PM	-	particulate matter
ppb	-	parts per billion
ppm	-	parts per million
ppmv	-	parts per million by volume
PRSD	-	percent relative standard deviation
QA	-	quality assurance
QC	-	quality control
rpm	-	revolutions per minute
scf	-	standard cubic feet (68EF and 29.92"Hg)
scfm	-	standard cubic feet per minute
SRM	-	Standard Reference Material
temp	-	temperature
tph	-	tons per hour
wt	-	weight
vs	-	versus
°F	-	temperature in degrees Fahrenheit
<	-	less than
>	-	more than
µg	-	microgram, 10^{-6} gram

INTRODUCTION

CONSOL Energy Inc., Research and Development (CONSOL R&D) is determining mercury speciation and removal at 10 coal-fired facilities with SCR/FGD combinations. These facilities are listed in Table 1. CONSOL R&D's Exploratory and Environmental Research Group conducted a series of flue gas mercury (Hg) measurements on Unit 2 at Plant 10 during the week of August 30, 2004, under U. S. Department of Energy (DOE) Cooperative Agreement No. DE-FC26-02NT41589 and EPRI Agreement No. EP-P13687/C6810. The test program consisted of four sets of measurements across the combustion emission control system that consists of a selective catalytic reduction (SCR) unit, electrostatic precipitator (ESP), and flue gas desulfurization (FGD) system. The mercury measurements were made using the Ontario-Hydro Flue Gas Hg Speciation Method at the SCR Inlet, SCR Outlet, Air Heater Outlet (upstream from the ESP), and the Stack. The testing conducted by CONSOL R&D is documented in this report.

Table 1. Coal-fired Facilities in Program

Site #	MW	Air Pollution Control Devices	Coal	Ozone Unit
1	330	SCR / Spray Dryer / Baghouse	Bit	year round
2	245	SCR / Spray Dryer / Baghouse	Bit	year round
3	560	SCR / ESP/ Limestone FGD, inhibited oxidation	Bit	Yes
4 Unit 1	468	ESP/ Limestone FGD, natural oxidation	Bit	(1)
4 Unit 2	468	SCR / ESP/ Limestone FGD, natural oxidation	Bit	year round
5 Unit 1	1,300	SCR / ESP/ Limestone FGD, in-situ oxidation	Bit	Yes
5 Unit 2	1,300	ESP/ Limestone FGD, in-situ oxidation	Bit	(1)
6 (2)	566	SCR / ESP/ Limestone FGD, ex-situ oxidation	Bit	Yes
7 (2)	544	SCR / ESP/ Limestone FGD, ex-situ oxidation	Bit	Yes
8	684	SCR / ESP / Lime FGD, ex-situ oxidation	Bit	Yes
9	640	SCR / ESP/ Lime FGD, inhibited oxidation	Bit	Yes
10	1,300	SCR / ESP/ Lime FGD, inhibited oxidation	Bit	Yes

(1) SCR was not installed at these units when the tests were conducted.
(2) Tests were also conducted at these units during non-ozone season.

HOST UTILITY DESCRIPTION

Unit 2 at Plant 10 is a 1,300 MW pulverized bituminous coal-fired electricity generating facility with an SCR unit, ESP, and magnesium-enhanced lime based wet FGD designed for 95% SO_2 reduction. The plant typically burns bituminous coal containing 3-4% sulfur. The SCR catalyst (honeycomb type) was made by Cormetech. The SCR is operated only during the ozone season. A concentrated urea solution was decomposed under heat and pressure to produce ammonia, which was then introduced into the flue gas duct upstream of the SCR catalyst for NOx reduction. Trona powder was injected after the air heater to control SO_3 emission. Emulsified sulfur was added to the lime slaker to produce thiosulfate ions to inhibit the oxidation of sulfite ions in the scrubbing liquor. This unit has six scrubber modules. During the test, only five modules were in service.

MERCURY SAMPLING RESULTS

I. Test Matrix

The mercury measurements consisted of a total of four tests over three days. The test matrix is summarized in Table 2.

Table 2. Sampling Test Matrix

Date	Activity	Flue Gas Sampling				Process Sampling					
		SCR Inlet	SCR Outlet	Air Heater Outlet	Stack	Coal	Bottom Ash	ESP Ash	Lime Slurry	FGD Slurry	FGD Makeup Water
8/30	Arrive, Setup	---	---	---	---	---	---	---	---	---	---
8/31	Setup, Test 1	X	X	X	X	X	X	X	X	X	X
9/1	Test 2	X	X	X	X	X	X	X	X	X	X
	Test 3	X	X	X	X	X	X	X	X	X	X
9/2	Test 4	X	X	X	X	X	X	X	X	X	X
	Pack, Demobilize	---	---	---	---	---	---	---	---	---	---

A total of 16 flue gas mercury measurements were conducted using ASTM Method D-6784-02 (Ontario Hydro Method). Mercury measurements were a maximum of 120 minutes in duration. Details of sampling conditions are provided in this report.

To calculate the material balance, CONSOL R&D and plant personnel obtained process samples simultaneously during the gas sampling periods. Laboratory analyses were performed by CONSOL R&D and are included in this report.

II. Flue Gas Mercury Sampling Results

Figure 1 shows the mercury speciation for the four tests at each location. All tests were

made isokinetically. A complete listing of mercury analyses is in Appendix C. The results at each location are discussed in the following sections. The associated tables list the measured Ontario Hydro sampling train concentrations and the mercury throughput for the respective location with the concentrations applied to the stack flow rate corrected to the locations' oxygen concentration. Adjusting the mercury throughput to the stack flow rate is more accurate as this is the only location where flow could be measured accurately.

A. SCR Inlet

Four mercury measurements were conducted at the SCR inlet location. Table 3 summarizes the mercury measurements at SCR inlet. The results show that more than 99.7% of the mercury was in the gas phase. The high percentage of gas phase mercury is expected due to the gas temperature (639°F) at this location. Nearly 54% of the total mercury was in the elemental form. The average concentrations of the gas phase oxidized and elemental mercury were 4.65 and 5.40 µg/m^3, respectively. The average concentration of total mercury measured at this location was 10.1 µg/m^3 and the average total mercury mass flow rate was 13.6 mg/sec.

Table 3. Flue Gas Hg Speciation at the SCR Inlet

Date	Test No.	Hg Concentration, µg/m^3 (dry std conditions)				Hg Flow, mg/sec			
		Hg^{part}	Hg^{++}	Hg^{0}	Hg^{total}	Hg^{part}	Hg^{++}	Hg^{0}	Hg^{total}
8/31	1	0.03	3.24	7.19	10.5	0.04	4.29	9.54	13.9
9/01	2	0.03	4.55	3.86	8.44	0.05	6.16	5.23	11.4
9/01	3	0.03	3.78	4.77	8.58	0.04	5.15	6.50	11.7
9/02	4	0.03	7.04	5.79	12.9	0.04	9.50	7.81	17.4
	Average	0.03	4.65	5.40	10.1	0.04	6.28	7.27	13.6
	Standard Deviation	0.001	1.68	1.43	2.07	0.002	2.28	1.84	2.74
	PRSD	4.4	36.2	26.5	20.5	4.6	36.4	25.3	20.1

B. SCR Outlet

Four mercury measurements were conducted at the SCR outlet location. Table 4 summarizes the results of the mercury measurements. Total mercury results for this location average approximately 30 percent higher than the total mercury measured at the SCR inlet. This is likely due to some stratification of the mercury concentration exiting the SCR. As mentioned later in this report, only one of the flue gas ducts were sampled. As with the SCR inlet, the majority (99.7%) of the mercury consisted of vapor-

phase mercury; most (95.2%) of the mercury was oxidized. The average concentrations of the particle-bound, oxidized and elemental mercury measured at this location were 0.04, 12.7, and 0.63 µg/m^3, respectively. The average concentration of total mercury was 13.4 µg/m^3 and the average mercury mass flow rate was 18.2 mg/sec.

Table 4. Flue Gas Hg Speciation at the SCR Outlet

Date	Test No.	Hg Concentration, µg/m^3 (dry std conditions)				Hg Flow, mg/sec			
		Hg^{part}	Hg^{++}	Hg^{0}	Hg^{total}	Hg^{part}	Hg^{++}	Hg^{0}	Hg^{total}
8/31	1	0.03	13.3	0.65	14.0	0.05	18.3	0.89	19.2
9/01	2	0.04	13.1	0.37	13.6	0.05	17.8	0.50	18.3
9/01	3	0.04	12.8	0.61	13.5	0.05	17.5	0.83	18.3
9/02	4	0.04	11.7	0.90	12.6	0.05	15.8	1.22	17.1
	Average	0.04	12.7	0.63	13.4	0.05	17.3	0.86	18.2
	Standard Deviation	0.002	0.74	0.22	0.57	0.002	1.08	0.30	0.89
	PRSD	4.6	5.8	34.2	4.3	3.8	6.2	34.2	4.9

C. Air Heater Outlet

Four mercury measurements were conducted at the air heater outlet location. Table 5 summarizes the results of the mercury measurements. The majority (98%) of the mercury was in the vapor-phase. The average concentrations of the particulate-bound, oxidized and elemental mercury measured at this location were 0.02, 10.4 and 0.20 µg/m^3, respectively. The average concentration of total mercury was 10.7 µg/m^3 and the average mercury mass flow rate was 14.6 mg/sec.

Table 5. Flue Gas Hg Speciation at the Air Heater Outlet

Date	Test No.	Hg Concentration, µg/m^3 (dry std conditions)				Hg Flow, mg/sec			
		Hg^{part}	Hg^{++}	Hg^{0}	Hg^{total}	Hg^{part}	Hg^{++}	Hg^{0}	Hg^{total}
8/31	1	0.02	13.3	0.17	13.5	0.03	18.0	0.23	18.3
9/01	2	0.03	9.38	0.20	9.61	0.04	13.0	0.28	13.3
9/01	3	0.01	9.85	0.24	10.1	0.02	13.4	0.33	13.8
9/02	4	0.02	9.25	0.17	9.44	0.03	12.6	0.23	12.9
	Average	0.02	10.4	0.20	10.7	0.03	14.3	0.27	14.6
	Standard Deviation	0.005	1.90	0.03	1.89	0.01	2.51	0.05	2.48
	PRSD	22.8	18.2	16.6	17.7	23.7	17.6	18.2	17.0

D. Stack

Four mercury measurements were conducted at the stack location. Table 6 summarizes the results of the mercury measurements. Elemental mercury throughput increased, between the air heater outlet and the stack, by more than 300%, from 0.27 to 0.83 mg/sec. A large increase in elemental mercury concentration was observed in wet scrubbers in tests at other plants in this program.[1,2]The average concentrations of the particulate-bound, oxidized and elemental mercury measured at the stack were 0.002, 0.65, and 0.52 µg/m^3, respectively. The average total mercury concentration was 1.18 µg/m^3 and the average mercury mass flow rate was 1.85 mg/sec.

[1] J. A. Withum, S. C. Tseng, J. E. Locke, Topical Report No. 1 for U.S. DOE Project No. DE-FC26-02NT41589 entitled, "Evaluation of Mercury Emissions fro Coal-Fired Facilities with SCR and FGD Systems."

[2] J. A. Withum, S. C. Tseng, J. E. Locke, Topical Report No. 4 for U.S. DOE Project No. DE-FC26-02NT41589 entitled, "Evaluation of Mercury Emissions fro Coal-Fired Facilities with SCR and FGD Systems."

Table 6. Flue Gas Hg Speciation at the Stack

Date	Test No.	Hg Concentration, μg/m^3 (dry std conditions)				Hg Flow, mg/sec			
		Hg^{part}	Hg^{++}	Hg^{0}	Hg^{total}	Hg^{part}	Hg^{++}	Hg^{0}	Hg^{total}
8/31	1	2.15×10^{-3}	0.99	0.68	1.68	3.37×10^{-3}	1.55	1.07	2.63
9/01	2	2.23×10^{-3}	0.66	0.32	0.99	3.45×10^{-3}	1.03	0.50	1.53
9/01	3	2.21×10^{-3}	0.45	0.33	0.78	3.44×10^{-3}	0.70	0.51	1.21
9/02	4	2.16×10^{-3}	0.48	0.76	1.25	3.53×10^{-3}	0.79	1.24	2.04
Average		2.19×10^{-3}	0.65	0.52	1.18	3.45×10^{-3}	1.02	0.83	1.85
Std. Dev.		3.86×10^{-5}	0.25	0.23	0.39	6.55×10^{-5}	0.38	0.38	0.62
PRSD		1.8	38.2	44.3	32.9	1.9	37.4	46.0	0.34

III. SCR/FGD System Hg Removal

Table 7 summarizes the flue gas mercury removal across the SCR/FGD system. The coal-to-stack average mercury removal was 89.6%. Comparing the mercury at the stack to the mercury at the air heater outlet, the average removal was 87.4%.

Table 7. Flue Gas Mercury Removal

Date	Test No.	System Mercury Reduction					
		Ontario Hydro Results, mg Hg^{total} /sec			Coal Feed Based Reduction, mg Hg^{total} /sec		
		Air Heater Outlet	Stack	% Reduction	Coal Feed	Stack	% Reduction
8/31	1	18.3	2.63	85.6	18.84	2.63	86.0
9/01	2	13.3	1.53	88.5	15.68	1.53	90.2
9/01	3	13.8	1.21	91.2	19.63	1.21	93.8
9/02	4	12.9	2.04	84.2	17.39	2.04	88.3
Average		14.6	1.85	87.4	17.88	1.85	89.6
Standard Deviation		2.48	0.62	3.12	1.74	0.62	3.31
PRSD		17.0	0.34	3.6	9.7	0.34	3.7

IV. Mercury Material Balance

An important criterion to gauge the overall quality of the tests is to conduct a mass balance to account for the mercury entering and leaving the plant during the tests. The mercury material balance closure is defined as the total mercury output from the plant divided by the total mercury input (expressed as %). The total mercury input is the sum of the amounts of mercury in the coal, lime slurry and FGD makeup water entering the plant. The total mercury output is the sum of the amounts of mercury leaving the plant via bottom ash, ESP hopper ash, FGD slurry blowdown, and stack flue gas. Table 8 summarizes the mercury material balance closure for the four tests conducted at the plant. The calculated material balance closure for mercury ranged from 76% to 104%.

The material balance closures for mercury for all the four tests are within the QA/QC criterion of 70-130% for a single test and the average value is 88%, which is within the QA/QC criterion of 80-120% for multiple tests. The measurements, calculations, and assumptions for calculating the material balances are described later in this report.

Table 8. Mercury Material Balance.

Test No.	1	2	3	4
Mercury input from coal (mg/sec)	18.8	15.7	19.6	17.4
Mercury input from lime slurry (mg/sec)	0.03	0.02	0.03	0.02
Mercury input from FGD makeup (mg/sec)	0.13	0.19	0.13	0.27
Total Hg input (mg/sec)	19.0	15.9	19.8	17.7
Mercury output via bottom ash (mg/sec)	0.006	0.005	0.006	0.005
Mercury output via ESP ash (mg/sec)	0.55	0.49	0.44	0.47
Mercury output from FGD slurry (mg/sec)	16.6	12.5	13.4	11.9
Hg output via stack flue gas (mg/sec)	2.63	1.53	1.21	2.04
Total Hg output (mg/sec)	19.8	14.5	15.1	14.5
Hg material balance closure (output / input)	104%	91%	76%	82%
Average Hg material balance closure	88 ± 12%			

EXPERIMENTAL AND SAMPLING METHODS

CONSOL R&D performed flue gas mercury determinations using the Ontario-Hydro sampling method. As a quality assurance/quality control (QA/QC) measure, samples of the coal, mill rejects, bottom ash, lime slurry, ESP ash, FGD slurry, FGD makeup water, trona, and urea solution, were taken to determine a mercury balance across the system.

I. Flue Gas Sampling Locations and Sampling Points

Four sampling locations, the SCR inlet, SCR outlet, air heater outlet (upstream of the ESP), and stack outlet were tested. Figure 2 is a flow schematic indicating the sampling locations at Plant 10, Unit 2.

Flue gas exits the economizer through three ducts (designated Ducts A, B, and C) and passes through the SCR, air heater, ESP, and FGD, before merging into a single duct to the stack. Previous mercury sampling on this unit was conducted on the B duct exclusively. To maintain consistency in results, CONSOL also sampled the B duct at the SCR inlet, SCR outlet, and air heater outlet. Because the large stack diameter requires the use of a sampling probe in excess of twelve feet in length, the stack was sampled for mercury through a single port. However, a full traverse with a pitot tube was conducted with each test to determine the gas flow rate.

Individual sampling locations are detailed in the following sections:

A. SCR Inlet

The SCR inlet consists of three horizontal, rectangular ducts, each measuring 32 feet wide by 18 feet, 6 inches deep.

A single point in Duct B was sampled in this program. Total test duration was 120 minutes, with the exception of test 3, which had to be shortened to 110 minutes due to high sample train vacuum readings resulting from excessive filter loading. Parametric readings were recorded every ten minutes. Mercury measurements were conducted with the sampling nozzle oriented parallel to and directly into the flow.

Four mercury measurements were performed at the SCR inlet. The sample train was prepared in EPA Method 17 configuration using an in-stack 19 mm x 90 mm quartz-fiber thimble filter. The filter apparatus was attached to a heated probe that was connected to the impinger train with a flexible heated Teflon sample line. Figure 3 is a photograph of the mercury sampling train on the SCR inlet. Mercury measurements were conducted isokinetically.

B. SCR Outlet

The SCR outlet consists of three vertical, rectangular ducts, each measuring 32 feet wide by 20 feet, 8 inches deep. Twelve sample ports are spaced across the face of each duct.

Only Duct B was sampled in this program. Preliminary pitot surveys conducted on August 31, 2004, indicated that the gas flow was straight, not cyclonic or swirling. During each test, the duct was sampled through four test ports; a single point in each port was sampled for 30 minutes, with parametric readings every ten minutes. The entire test duration was 120 minutes. Mercury measurements were conducted with the sampling nozzle oriented parallel to and directly into the flow.

Four mercury measurements were performed at the SCR outlet. The sample train was prepared in EPA Method 17 configuration using an in-stack 19 mm x 90 mm quartz-fiber thimble filter. The filter apparatus was attached to a heated probe that was connected to the impinger train with a glass filter bypass in a heated filter box. Figure 4 is a photograph of the mercury sampling train on the SCR outlet. Mercury measurements were conducted isokinetically.

C. Air Heater Outlet (ESP Inlet)

The air heater outlet duct consists of three horizontal ducts, each approximately 10 feet deep and 44 feet wide. Fourteen test ports are located across the top of each duct. Preliminary pitot surveys conducted on August 31, 2004, indicated that the gas flow was straight, not cyclonic or swirling.

For consistency of results, only Duct B was sampled. The duct was sampled through three accessible test ports; a single traverse point was sampled in each port. Each point was sampled for 40 minutes, with parametric readings recorded every ten minutes, for a total test time of 120 minutes. Mercury measurements were conducted with the sampling nozzle oriented parallel to and directly into the flow.

Four mercury measurements were performed at the air heater outlet. The sample train was prepared in EPA Method 17 configuration using an in-stack 19 mm x 90 mm quartz-fiber thimble filter. The filter apparatus was attached to a heated probe that was connected to the impinger train with a flexible heated Teflon sample line. Figure 5 is a photograph of the mercury sampling train on the air heater outlet. Mercury measurements were conducted isokinetically.

D. Stack (FGD Outlet)

The stack is 40 feet in diameter. Single point sampling was conducted in the East sample access port. Throughout the duration of the Ontario Hydro sampling period, velocity traverses were completed in four access ports, each with three traverse points, as determined by EPA Method 1.

Four sample runs were performed at the stack sampling location. All tests were 120 minutes in duration with parametric readings recorded every ten minutes. A standard EPA Method 5 sample train configuration was utilized for this location.

Preliminary pitot surveys conducted on the August 31, 2004, indicated that the gas flow was straight, not cyclonic or swirling. Hg measurements were conducted with the nozzle oriented horizontally, directly into the flow.

Figure 6 is a photograph of the Hg sampling train on the stack. Hg measurements were conducted isokinetically.

II. Flue Gas Mercury Measurements

Flue gas mercury measurements were obtained using the Ontario-Hydro Hg speciation train. The sampling train schematic is shown in Figure 7.

Flue gas was extracted from the flue gas stream and pulled through a heated glass-lined probe and quartz filter. Total particulate matter mass loading was calculated from the solids collected prior to and on the filter. Probe temperatures were maintained at 325 ± 25 °F at the SCR inlet and outlet and the air heater outlet. Probe and filter temperatures were maintained at 248 ± 25 °F at the stack. Where particle loading is

high, the probe and filter are maintained as close as practical to the flue gas temperature.

Mercury collected prior to and on the filter is assumed to be particulate Hg (Hg^{part}). The flue gas exits the quartz filter and passes through a series of chilled impingers. The first three impingers are filled with 100 mL of a 1M-potassium chloride (KCl) solution. It is assumed these impingers capture oxidized forms of mercury in the flue gas (Hg^{++}). The next impinger is filled with 100 mL of a 5% nitric acid and 10% H_2O_2 solution. The purpose of this impinger is to remove SO_2 from the flue gas to preserve the oxidizing strength of the permanganate impingers. Mercury collected in this impinger is assumed to be the elemental form (Hg^0). The next two impingers are filled with 100 mL of an acidic potassium permanganate ($KMnO_4$) solution. It is assumed that these impingers collect elemental mercury (Hg^0). The next impinger is blank to catch any excess moisture. The gas exits the impinger train through a silica gel-filled impinger that removes the moisture from the flue gas. The mercury species collected by the Ontario-Hydro sampling train component are listed in Table 9.

Table 9. Mercury Speciation by Train Component

Train Component	Species Measured
Probe & Nozzle Rinse	Hg^{part}
Quartz Filter	Hg^{part}
KCl Impingers	Hg^{++}
HNO_3/H_2O_2 Impinger	Hg^0
$KMnO_4$ Impingers	Hg^0
HCl Rinse of $KMnO_4$ Impingers	Hg^0

The absorbing solutions were made fresh daily. The impingers were charged and the sampling components were transported to the required locations. The sampling trains were assembled, pre-heated, and checked for pitot and sample line leaks as detailed in EPA Methods 2 and 5, respectively. After passing the leak-check procedure, the sampling probes were inserted into their respective ducts, in-stack filters were allowed to heat to stack temperature, and sampling was initiated. Leak checks were also performed between port changes.

Oxygen readings were monitored at the outlet of the sampling train using a Teledyne Model Max 5 portable analyzer (electrochemical O_2 sensor). At the completion of the sampling period, the sample trains were checked for leaks, purged for 10 minutes, and then disassembled. The components were transported back to the lab trailer for recovery.

The amount of mercury collected in the impinger solutions was determined as outlined in EPA Method 29 and the Ontario-Hydro Method. An aliquot of the impinger solution is acidified and the mercury is determined using cold vapor atomic absorption (CVAA) spectroscopy. The atomic absorption spectrometer is calibrated with a commercial mercury standard. The calibration is verified using NIST Standards 1641D and 1633b. The calibration is reassessed periodically by analyzing a quality control standard. The instrument is recalibrated as required. Each sample matrix is analyzed as a set and an individual calibration curve is used for each set. Depending on sample type, selected samples are spiked with 2, 5, 10, or 15 ng/mL (ppb) of mercury and reanalyzed. Spike recovery must be within ±30% or the sample is diluted and reanalyzed. Selected samples are analyzed in duplicate. The duplicates must be within ±30% or the analyses are repeated.

Where sufficient solids are collected, particulate mercury is analyzed using a 0.5-1.0 gm ash sample with the direct combustion method (ASTM Method D6722). In cases where the particulate catch is low (primarily stack filters), the entire filter sample is digested with aqua-regia in pressure vessels prior to analysis by CVAA.

III. Coal Sampling and Analysis

A. Coal Samples

The plant operators collected samples twice a day at about 9:00 AM and 9:00 PM from the coal feed which was upstream of the day bins. This is the safest place to collect coal samples. Once the coal entered the bins, the transfer pipes between the bins and the burners were pressurized. About 50 pounds of coal were taken each time. The coal was transferred to the laboratory where it was pulverized and split. CONSOL received each sample in a one-gallon plastic zip-top bag. Listed in Table 10 are the coal samples collected.

Table 10. List of Coal Samples

Test No.	Test Date	Sample I.D.	Sampling Time
1	8/31/2004	Coal Test 1	09:00
2	9/1/2004	Coal Test 2	21:00
3	9/1/2004	Coal Test 3	09:00
4	9/2/2004	Coal Test 4	21:00

B. Summary of the Results of Coal Analyses

Coal Samples were analyzed using a direct mercury analyzer following the procedures of ASTM Method D6722. Detailed results of analysis for each coal sample are presented in Appendix D and the results are summarized in Table 11.

Table 11. Results of Analysis of Coal Samples.

Sample ID	Coal Test 1	Coal Test 2	Coal Test 3	Coal Test 4
Sample Date	8/31/2004	9/1/2004	9/1/2004	9/2/2004
Analytical No.	20044630	20044631	20044632	20044633
Moisture (%)	1.98	1.73	1.96	1.77
VM (%, dry)	39.34	39.13	39.35	39.12
Ash (%, dry)	9.64	9.33	9.79	9.55
Carbon (%, dry)	73.94	74.97	73.81	74.30
Hydrogen (%, dry)	4.44	4.32	4.23	4.52
Nitrogen (%, dry)	1.50	1.68	1.70	1.74
Total Sulfur (%, dry)	3.82	3.62	3.76	3.70
HHV (Btu/lb, dry)	13,357	13,502	13,300	13,326
Chlorine (%, dry)	0.06	0.06	0.07	0.06
Hg (ppm, as det'd)	0.127	0.111	0.135	0.123
Major Ash Elements (%, dry)				
SiO_2	43.21	42.72	43.51	43.47
Al_2O_3	21.16	20.77	21.24	20.76
TiO_2	0.88	0.86	0.88	0.87
Fe_2O_3	26.63	27.02	25.59	26.46
CaO	2.93	3.17	3.16	3.11
MgO	0.76	0.76	0.74	0.77
Na_2O	0.42	0.48	0.44	0.44
K_2O	1.59	1.58	1.61	1.62
P_2O_5	0.28	0.38	0.31	0.33
SO_3	3.08	2.78	3.27	2.87

IV. Process Sample Collection

CONSOL R&D and plant personnel collected samples of bottom ash, mill rejects, ESP ash, lime slurry, FGD slurry, FGD makeup water, Trona, and urea. CONSOL R&D completed comprehensive analyses using a direct mercury analyzer and following the procedures of ASTM Method D6722. Detailed results of the process material analyses are presented in Appendix D.

A. Bottom Ash

At the end of each test, plant operators collected a bottom ash sample from the discharge of the sluicing pipe immediately after the ash was discharged from the ash sluicing bins. Table 12 details the results of the bottom ash analyses.

Table 12. Results of Analyses of Bottom Ash Samples

Sample ID	Bottom Ash Test 1	Bottom Ash Test 2	Bottom Ash Test 3	Bottom Ash Test 4
Sample Date	8/31/2004	9/1/2004	9/1/2004	9/2/2004
Analytical No.	20044634	20044635	20044636	20044637
Moisture (%)	0.01	0.01	0.01	0.01
Ash (%, dry)	100.67	101.45	100.76	100.49
Carbon (%, dry)	0.13	0.03	0.04	0.03
Chlorine (ppm, dry)	34	8	14	35
Hg (ppm, as det'd)	< 0.004	< 0.004	< 0.004	< 0.004
Major Ash Elements (%,dry)				
SiO_2	36.13	37.78	41.14	41.31
Al_2O_3	17.51	18.16	19.76	19.84
TiO_2	0.79	0.83	0.91	0.90
Fe_2O_3	37.86	38.15	33.60	32.45
CaO	2.53	2.60	2.77	2.74
MgO	0.60	0.62	0.68	0.68
Na_2O	0.33	0.32	0.35	0.38
K_2O	1.10	1.15	1.27	1.32
P_2O_5	0.19	0.23	0.25	0.23
SO_3	0.34	0.81	0.29	0.11

B. Mill Rejects

Four samples were taken by the plant operators. The volume of mill rejects collected in each test was very small, less than 5 gallons. Rusty metal objects such as bolts, nuts, welding rods, and nails were identified in every sample. These metallic contaminants were removed before the samples were prepped. The results of analysis of the mill reject samples are summarized in Table 13.

Table 13. Results of Analyses of Mill Reject Samples

Sample ID	Mill Rejects Test 1	Mill Rejects Test 2	Mill Rejects Test 3	Mill Rejects Test 4
Sample Date	8/31/2004	9/1/2004	9/1/2004	9/2/2004
Analytical No.	20044883	20044884	20044885	20044886
Moisture (%)	0.48	0.40	0.75	0.99
VM (%, dry)	20.45	23.31	18.55	19.39
Ash (%, dry)	83.34	78.93	85.72	67.04
Carbon (%, dry)	7.02	11.29	6.76	19.84
Total Sulfur (%, dry)	10.85	18.17	9.64	13.94
Chlorine (%, dry)	0.01	0.01	0.01	0.02
Hg (ppm, as det'd)	0.985	1.440	0.535	0.797
Major Ash Elements (%,dry)				
SiO_2	28.11	15.98	29.51	38.36
Al_2O_3	6.86	4.61	9.28	10.00
TiO_2	0.35	0.23	0.45	0.49
Fe_2O_3	28.25	34.09	25.78	41.53
CaO	19.05	16.14	17.70	3.92
MgO	3.58	2.02	2.09	0.88
Na_2O	0.32	0.21	0.36	0.41
K_2O	0.67	0.34	0.61	0.87
P_2O_5	0.10	0.08	0.19	0.13
SO_3	13.73	19.37	11.44	4.19

C. ESP Ash

The ESP ash hoppers are arranged in two levels (upper and lower) with 18 hoppers (3 rows x 6 hoppers per row) at each level. Figure 8 depicts the layout and identification of these hoppers. Ash samples could only be taken from hoppers fitted with ash sampling pipes, which are marked with bold-faced letters in Figure 8. Shown in Figure 9 is a picture of one of these hoppers, taken during sample collection.

ESP ash samples were taken by two laboratory technicians, during the second hour of each test. The samples were initially collected in one-liter size bottles, then transferred into labeled, one-gallon size Ziploc bags, and then sealed in a second Ziploc bag to prevent moisture from entering the bags.

Tables 14 through 17 summarize the analytical results for the ESP ash samples from test runs 1 through 4, respectively. In tests conducted at other plants, CONSOL has observed that the mercury content of the ESP ash samples tends to be correlated with the carbon content of the samples. Similar behavior was observed here. Figure 10 shows the correlation between ESP ash carbon concentration and mercury concentration. The R^2 for the linear regression line in Figure 10 is 0.739.

Table 14. Results of Analyses of ESP Hopper Ash Samples Collected in Test 1.

Sample ID	ESP Hopper Ash 1-11L	ESP Hopper Ash 1-15L	ESP Hopper Ash 1-16L	ESP Hopper Ash 1-17L	ESP Hopper Ash 1-21L	ESP Hopper Ash 1-25L	ESP Hopper Ash 1-31L	ESP Hopper Ash 1-32L	ESP Hopper Ash 1-35L	ESP Hopper Ash 1-12U	ESP Hopper Ash 1-15U	ESP Hopper Ash 1-21U	ESP Hopper Ash 1-25U	ESP Hopper Ash 1-26U	ESP Hopper Ash 1-31U
Hopper No.	11L	15L	16L	17L	21L	25L	31L	32L	35L	12U	15U	21U	25U	26U	31U
Electric Field No.	1	1	2	3	1	1	1	2	1	2	1	1	1	2	1
Ananlytical No.	20044650	20044651	20044652	20044653	20044654	20044655	20044656	20044657	20044658	20044659	20044660	20044661	20044662	20044663	20044664
Moisture (%)	0.19	0.18	0.14	0.25	0.16	0.11	0.62	1.02	0.80	0.33	0.13	0.03	0.15	0.10	0.15
Ash (%, dry)	97.76	97.52	96.89	95.75	98.76	98.50	98.22	96.92	97.03	95.97	97.68	98.66	98.25	98.28	98.28
Carbon (%, dry)	1.52	1.51	1.92	1.48	0.86	1.02	1.17	1.66	1.45	2.65	1.66	0.96	1.14	0.86	1.31
Hg (ppm, as det'd)	0.062	0.039	0.066	0.046	0.022	0.020	0.041	0.044	0.069	0.204	0.078	0.037	0.025	0.025	0.056
Major Ash Elements (%, dry)															
SiO_2	42.87	43.01	42.60	45.51	42.96	44.02	38.99	42.97	39.86	45.62	44.95	44.66	44.25	41.91	45.75
Al_2O_3	20.61	20.64	20.69	23.97	20.31	21.04	18.65	21.25	19.42	22.38	21.75	21.31	21.35	20.25	21.89
TiO_2	0.94	0.96	0.97	1.18	0.94	0.98	0.87	0.99	0.90	1.05	1.02	1.00	1.00	0.96	1.02
Fe_2O_3	25.29	24.22	22.90	15.83	26.09	23.64	27.85	21.55	26.94	18.14	21.26	23.49	22.05	25.31	21.85
CaO	2.82	2.84	2.88	3.18	2.89	2.82	2.64	3.62	4.82	2.89	2.90	2.95	2.89	2.93	2.89
MgO	0.79	0.77	0.75	0.94	0.81	0.77	3.81	1.85	2.65	0.81	0.89	0.77	0.78	0.74	0.78
Na_2O	3.06	2.47	2.51	1.39	2.51	2.85	2.93	1.84	0.47	2.20	2.16	2.13	3.04	2.42	2.36
K_2O	1.75	1.73	1.76	2.24	1.68	1.78	1.54	1.89	1.64	1.95	1.89	1.76	1.84	1.68	1.88
P_2O_5	0.32	0.35	0.40	0.83	0.31	0.34	0.17	0.45	0.28	0.47	0.40	0.36	0.39	0.36	0.37
SO_3	2.33	2.95	3.42	4.00	2.01	2.76	3.25	3.11	1.92	2.88	2.50	2.08	2.99	3.26	2.25

Table 15. Results of Analyses of ESP Hopper Ash Samples Collected in Test 2.

Sample ID	ESP Hopper Ash 2-11L	ESP Hopper Ash 2-15L	ESP Hopper Ash 2-16L	ESP Hopper Ash 2-17L	ESP Hopper Ash 2-21L	ESP Hopper Ash 2-25L	ESP Hopper Ash 2-31L	ESP Hopper Ash 2-32L	ESP Hopper Ash 2-35L	ESP Hopper Ash 2-12U	ESP Hopper Ash 2-15U	ESP Hopper Ash 2-21U	ESP Hopper Ash 2-25U	ESP Hopper Ash 2-26U	ESP Hopper Ash 2-31U
Hopper No.	11L	15L	16L	17L	21L	25L	31L	32L	35L	12U	15U	21U	25U	26U	31U
Electric Field No.	1	1	2	3	1	1	1	2	1	2	1	1	1	2	1
Ananlytical No.	20044665	20044666	20044667	20044668	20044669	20044670	20044671	20044672	20044673	20044674	20044675	20044676	20044677	20044678	20044679
Moisture (%)	0.13	0.15	0.15	0.29	0.01	0.01	0.01	0.07	0.04	0.23	0.03	0.01	0.08	0.06	0.04
Ash (%, dry)	97.91	98.20	97.18	95.68	98.99	98.74	98.49	97.24	98.43	96.03	97.39	98.77	98.31	98.55	98.34
Carbon (%, dry)	1.82	1.32	1.73	1.32	0.76	0.84	1.30	1.78	1.30	2.72	1.92	0.94	0.94	0.87	1.19
Hg (ppm, as det'd)	0.081	0.035	0.065	0.036	0.020	0.017	0.033	0.058	0.058	0.226	0.078	0.029	0.022	0.023	0.054
Major Ash Elements (%, dry)															
SiO_2	44.35	43.03	42.91	45.34	43.90	43.39	44.00	44.72	43.68	43.95	44.14	43.47	43.84	36.77	43.66
Al_2O_3	21.24	20.36	20.61	23.62	20.92	20.70	20.99	21.76	20.87	22.30	21.80	21.28	21.60	18.15	21.44
TiO_2	0.97	0.96	0.97	1.19	0.97	0.97	0.99	1.02	0.96	1.04	1.01	0.99	1.01	0.84	0.99
Fe_2O_3	24.69	27.09	25.20	16.14	25.66	25.38	25.29	22.72	26.12	20.43	22.78	25.96	23.70	34.43	25.05
CaO	2.76	2.84	2.80	3.13	2.81	2.81	2.86	2.80	2.76	2.94	2.85	2.85	2.85	2.83	2.84
MgO	0.75	0.72	0.75	0.93	0.74	0.74	0.77	0.78	0.77	0.81	0.80	0.74	0.78	0.65	0.75
Na_2O	2.38	1.82	2.10	1.28	2.10	2.30	2.04	1.87	2.03	2.06	1.61	1.72	2.04	2.14	1.60
K_2O	1.81	1.64	1.72	2.14	1.78	1.74	1.73	1.88	1.80	1.74	1.63	1.60	1.61	1.22	1.58
P_2O_5	0.28	0.28	0.34	0.85	0.28	0.32	0.31	0.40	0.28	0.45	0.37	0.34	0.37	0.24	0.34
SO_3	2.08	2.15	2.82	4.17	1.93	2.45	2.06	2.57	1.67	2.75	2.17	1.93	2.70	3.12	2.01

Table 16. Results of Analyses of ESP Hopper Ash Samples Collected in Test 3.

Sample ID	ESP Hopper Ash 3-11L	ESP Hopper Ash 3-15L	ESP Hopper Ash 3-16L	ESP Hopper Ash 3-17L	ESP Hopper Ash 3-21L	ESP Hopper Ash 3-25L	ESP Hopper Ash 3-31L	ESP Hopper Ash 3-32L	ESP Hopper Ash 3-35L	ESP Hopper Ash 3-37L	ESP Hopper Ash 3-15U	ESP Hopper Ash 3-21U	ESP Hopper Ash 3-25U	ESP Hopper Ash 3-26U	ESP Hopper Ash 3-31U	ESP Hopper Ash 3-35U
Hopper No.	11L	15L	16L	17L	21L	25L	31L	32L	35L	37L	15U	21U	25U	26U	31U	35U
Electric Field No.	1	1	2	3	1	1	1	2	1	3	1	1	1	2	1	1
Ananlytical No.	20044680	20044681	20044682	20044683	20044684	20044685	20044686	20044687	20044688	20044689	20044690	20044691	20044692	20044693	20044694	20044695
Moisture (%)	0.13	0.06	0.04	0.53	0.06	0.06	0.15	0.18	0.12	1.59	0.17	0.16	0.16	0.19	0.2	0.23
Ash (%, dry)	98.14	98.39	97.40	95.22	99.07	98.75	98.75	97.39	98.60	95.66	97.57	98.82	98.56	97.99	98.32	98.57
Carbon (%, dry)	1.59	1.28	1.60	1.33	0.67	0.82	0.99	1.42	1.21	1.39	1.66	0.86	0.90	0.96	1.16	1.14
Hg (ppm, as det'd)	0.083	0.034	0.058	0.034	0.018	0.015	0.025	0.043	0.052	0.037	0.067	0.028	0.019	0.023	0.051	0.043
Major Ash Elements (%, dry)																
SiO_2	42.44	41.73	41.67	44.44	42.80	43.24	42.26	43.84	42.42	43.30	44.31	42.85	43.25	41.50	43.91	41.66
Al_2O_3	20.61	20.37	20.31	23.54	20.48	20.85	20.31	21.64	20.32	22.83	21.54	20.63	20.93	20.30	21.23	20
TiO_2	0.95	0.95	0.96	1.18	0.95	0.97	0.95	1.01	0.94	1.15	1.00	0.96	0.98	0.97	0.99	0.93
Fe_2O_3	25.77	27.17	24.49	16.13	25.85	24.67	26.77	22.44	26.43	16.90	22.37	26.22	22.43	24.54	23.69	27.25
CaO	2.79	2.74	2.81	3.06	2.78	2.76	2.67	2.79	2.69	3.38	2.73	2.72	2.75	2.76	2.72	2.66
MgO	0.73	0.72	0.73	0.90	0.72	0.73	0.71	0.77	0.71	1.04	0.77	0.73	0.74	0.73	0.73	0.69
Na_2O	2.18	1.90	2.25	1.46	2.22	2.45	2.10	2.11	2.04	1.62	1.95	1.98	2.58	1.92	2.03	2.44
K_2O	1.50	1.50	1.76	2.37	1.77	1.92	1.75	2.09	1.77	2.32	2.03	1.89	1.90	1.82	1.89	1.7
P_2O_5	0.30	0.30	0.37	0.82	0.29	0.34	0.28	0.44	0.30	0.82	0.37	0.32	0.37	0.40	0.36	0.29
SO_3	2.10	2.13	3.03	4.34	2.05	2.56	2.07	2.89	1.54	4.95	2.27	1.93	2.91	3.08	2.15	1.77

Table 17. Results of Analyses of ESP Hopper Ash Samples Collected in Test 4.

Sample ID	ESP Hopper Ash 4-11L	ESP Hopper Ash 4-15L	ESP Hopper Ash 4-16L	ESP Hopper Ash 4-17L	ESP Hopper Ash 4-21L	ESP Hopper Ash 4-25L	ESP Hopper Ash 4-31L	ESP Hopper Ash 4-32L	ESP Hopper Ash 4-35L	ESP Hopper Ash 4-37L	ESP Hopper Ash 4-15U	ESP Hopper Ash 4-21U	ESP Hopper Ash 4-25U	ESP Hopper Ash 4-26U	ESP Hopper Ash 4-31U	ESP Hopper Ash 4-35U
Hopper No.	11L	15L	16L	17L	21L	25L	31L	32L	35L	37L	15U	21U	25U	26U	31U	35U
Electric Field No.	1	1	2	3	1	1	1	2	1	3	1	1	1	2	1	1
Ananlytical No.	20044696	20044697	20044698	20044699	20044700	20044701	20044702	20044703	20044704	20044705	20044706	20044707	20044708	20044709	20044710	20044711
Moisture (%)	0.28	0.24	0.19	0.46	0.21	0.25	0.19	0.21	0.25	0.8	0.2	0.11	0.15	0.11	0.15	0.38
Ash (%, dry)	98.03	97.79	97.03	95.72	98.63	98.55	98.22	97.68	98.38	96.13	97.30	98.92	98.29	98.08	98.43	99.21
Carbon (%, dry)	1.44	1.56	2.01	1.63	0.84	0.91	1.26	1.48	1.18	1.30	1.58	0.96	1.02	0.96	1.11	0.48
Hg (ppm, as det'd)	0.063	0.044	0.076	0.054	0.021	0.019	0.039	0.050	0.052	0.065	0.089	0.032	0.026	0.036	0.061	0.024
Major Ash Elements (%, dry)																
SiO_2	42.45	42.43	41.56	45.03	41.49	42.65	42.26	43.23	41.37	44.38	43.82	42.61	43.01	41.25	43.27	32.84
Al_2O_3	20.33	20.55	20.24	23.52	19.84	20.64	20.39	21.20	19.92	22.90	21.38	20.43	20.87	20.33	20.87	15.37
TiO_2	0.95	0.95	0.95	1.17	0.92	0.96	0.96	1.00	0.93	1.15	1.02	0.96	0.99	0.96	0.98	0.72
Fe_2O_3	24.34	24.01	24.14	16.83	26.51	24.22	24.90	22.10	27.39	17.62	22.08	26.22	22.54	25.64	24.56	42.8
CaO	2.59	2.62	2.64	2.89	2.60	2.62	2.62	2.65	2.59	2.90	2.62	2.63	2.58	2.63	2.62	2.5
MgO	0.71	0.72	0.73	0.89	0.70	0.73	0.73	0.75	0.70	0.88	0.77	0.71	0.75	0.73	0.74	0.55
Na_2O	3.18	2.99	2.89	1.61	2.93	3.17	2.87	2.83	2.79	1.80	2.13	2.44	3.16	2.88	2.60	2.48
K_2O	1.74	1.86	1.75	2.34	1.78	1.89	1.83	1.96	1.76	2.21	1.97	1.81	1.93	1.92	1.92	1.22
P_2O_5	0.30	0.33	0.37	0.72	0.30	0.32	0.34	0.39	0.29	0.73	0.38	0.30	0.35	0.38	0.34	0.19
SO_3	2.36	2.84	3.25	3.84	2.24	2.82	2.50	2.96	1.92	4.03	2.70	1.99	3.13	3.33	2.41	1.71

D. Lime Slurry Samples

Samples were taken by the plant laboratory technicians at the lime slurry preparation plant. One sample was collected during the first hour of each test. The four lime slurry samples collected are listed in Table 18. Each sample was first filtered to generate a separate solids (i.e., filter cake) and filtrate samples, which were then analyzed separately. Tables 19 and 20 summarize the analytical results of the lime slurry solids and filtrate samples.

Table 18. Lime Slurry Samples.

Test No.	Test Date	Sample I.D.	Sample Time
1	8/31/2004	Lime Slurry Test 1	14:00
2	9/1/2004	Lime Slurry Test 2	10:12
3	9/1/2004	Lime Slurry Test 3	14:23
4	9/2/2004	Lime Slurry Test 4	9:55

Table 19. Results of Analyses of Lime Slurry Solids Samples

Sample Description	Lime Slurry Solids Test 1	Lime Slurry Solids Test 2	Lime Slurry Solids Test 3	Lime Slurry Solids Test 4
Sample Date	8/31/2004	9/1/2004	9/1/2004	9/2/2004
Analytical No.	20044642	20044643	20044644	20044645
% solids in Original Sample	21.46	16.52	20.43	19.77
Specific Gravity	1.122	1.051	1.034	1.084
Moisture (%)	1.12	0.68	0.56	1.17
Ash (%, dry)	74.00	74.63	74.70	73.81
Carbon (%, dry)	0.35	1.09	0.79	0.84
Hg (ppm, as det'd)	< 0.004	< 0.004	< 0.004	< 0.004
Major Ash Elements (%, dry)				
SiO_2	1.39	1.37	1.40	1.44
Al_2O_3	0.43	0.49	0.45	0.45
TiO_2	0.02	0.02	0.02	0.02
Fe_2O_3	0.17	0.20	0.19	0.18
CaO	68.38	70.90	69.23	69.34
MgO	3.45	4.41	4.21	3.68
Na_2O	0.02	0.01	0.01	0.01
K_2O	0.10	0.05	0.06	0.07
P_2O_5	0.00	0.02	0.00	0.02
SO_3	0.21	0.26	0.23	0.23

Table 20. Results of Analyses of Lime Slurry Filtrate Samples

Sample ID	Lime Slurry Filtrate-1	Lime Slurry Filtrate-2	Lime Slurry Filtrate-3	Lime Slurry Filtrate-4
Test No.	1	2	3	4
Sample Date	8/31/2004	9/1/2004	9/1/2004	9/2/2004
Analytical No.	20044626	20044627	20044628	20044629
Ca (μg/mL)	624	787	699	713
Total Iron (μg/mL)	< 0.05	0.1	< 0.05	< 0.05
Mg (μg/mL)	0.99	2.82	0.60	0.37
K (μg/mL)	289	224	228	258
Na (μg/mL)	66.2	56.7	57.1	62.7
Ammonia as NH_3 (μg/mL)	< 10	< 10	< 10	< 10
Cl (μg/mL)	100	150	200	150
NO_3 as N (μg/mL)	< 10	< 10	< 10	< 10
SO_4 (μg/mL)	145	122	126	141
Hg (μg/L)	< 1.0	< 1.0	< 1.0	< 1.0

E. FGD Slurry

FGD slurry samples were taken by CONSOL personnel at the sinks near each module. Figure 11 is a picture taken while the slurry was flowing from the module into the sink. Each operating module was sampled twice during each test using a 500 mL plastic bottle. One sample was taken during the first hour and another during the second hour of the test. The slurry samples taken from the modules in service during a test were mixed and kept in a 2-gal plastic bucket, resulting in four FGD slurry samples. Listed in Table 21 are the FGD slurry samples taken during the tests. Included in this table are the readings from two pH probes and the slurry density (in % solids) meter mounted at each slurry sampling line. Tables 22 and 23 detail the analytical results for the FGD slurry solids and filtrate samples, respectively.

Table 21. List of FGD Slurry Samples.

Test No.	Test Date	Module #	Time Sampled	pH, 1	pH, 2	% solids
1	8.31.2004	1	14:30	6.45	7.10	12.00
		2	Module #2 off-line			
		3	14:28	6.08	6.30	11
		4	14:25	6.38	6.32	12.55
		5	14:22	6.70	6.80	11.56
		6	14:19	6.47	6.45	12.60
		1	15:15	6.34	7.12	11.81
		2	Module #2 off-line			
		3	15:17	6.09	6.51	11.00
		4	15:20	6.55	6.51	12.46
		5	15:22	6.63	6.49	11.27
		6	15:25	6.45	6.46	12.49

Test No.	Test Date	Module #	Time Sampled	pH, 1	pH, 2	% solids
3	9.1.2004	1	14:24	6.54	7.14	11.72
		2	14:20	5.91	5.85	11.21
		3	14:15	6.52	6.55	12
		4	14:13	6.45	6.49	12.57
		5	Module #5 off-line			
		6	14:11	6.57	6.55	12.37
		1	14:55	6.48	7.14	11.88
		2	14:57	5.84	5.79	11.31
		3	14:59	6.50	6.52	12
		4	15:01	6.38	6.41	12.86
		5	Module #5 off-line			
		6	15:03	6.55	6.54	12.44

Test No.	Test Date	Module #	Time Sampled	pH, 1	pH, 2	% solids
2	9.1.2004	1	9:55	6.40	7.14	12.10
		2	9:57	5.50	5.75	11.47
		3	10:01	6.54	6.55	12
		4	10:03	6.54	6.60	12.48
		5	10:05	6.86	6.71	(no reading)
		6	10:07	6.56	6.54	12.78
		1	11:00	6.48	7.14	12.00
		2	11:05	5.64	5.67	11.57
		3	11:07	6.50	6.52	12
		4	11:10	6.58	6.63	12.43
		5	Module #5 off-line			
		6	11:20	6.54	6.52	12.34

Test No.	Test Date	Module #	Time Sampled	pH, 1	pH, 2	% solids
4	9.2.2004	1	10:13	6.46	7.14	12.31
		2	10:15	5.57	5.58	10.91
		3	10:17	6.51	6.49	12
		4	10:18	6.60	6.61	12.78
		5	Module #5 off-line			
		6	10:20	6.50	6.49	13.51
		1	11:01	6.44	7.14	12.01
		2	11:02	5.57	5.58	10.99
		3	11:03	6.50	6.49	12
		4	11:04	6.57	6.56	12.54
		5	Module #5 off-line			
		6	11:06	6.54	6.53	13.02

Table 22. Results of Analyses of FGD Slurry Solids Samples.

Sample Description	FGD Slurry Test 1	FGD Slurry Test 2	FGD Slurry Test 3	FGD Slurry Test 4
Sample Date	8/31/2004	9/1/2004	9/1/2004	9/2/2004
Analytical No.	20044646	20044647	20044648	20044649
% solids in Original Sample	4.90	4.80	5.30	5.20
Specific Gravity	1.072	1.072	1.075	1.076
Moisture (%)	0.53	0.86	1.08	0.73
Ash (%, dry)	92.64	93.31	92.37	89.13
Carbon (%, dry)	0.36	0.24	0.22	0.19
Chlorine (%, dry)	0.66	0.51	0.55	0.47
Hg (ppm, as det'd)	0.49	0.43	0.35	0.39
Major Ash Elements (%, dry)				
SiO_2	1.20	1.18	0.89	1.12
Al_2O_3	0.30	0.33	0.27	0.32
TiO_2	0.01	0.01	0.01	0.01
Fe_2O_3	0.15	0.16	0.13	0.17
CaO	35.89	39.74	33.06	39.90
MgO	6.18	1.80	7.82	3.05
Na_2O	0.12	0.07	0.16	0.09
K_2O	0.19	0.10	0.24	0.13
P_2O_5	0	0	0	0
SO_3	56.25	56.29	55.81	56.82

Table 23. Results of Analyses of FGD Slurry Filtrate Samples.

Sample ID	FGD Slurry Filtrate 1	FGD Slurry Filtrate 2	FGD Slurry Filtrate 3	FGD Slurry Filtrate 4
Test No.	1	2	3	4
Sample Date	8/31/2004	9/1/2004	9/1/2004	9/2/2004
Analytical No.	20044622	20044623	20044624	20044625
Ca (µg/mL)	111	107	87.3	85.1
Total Iron (µg/mL)	0.73	0.87	0.99	1.46
Mg (µg/mL)	9,450	8,890	8,850	9,050
K (µg/mL)	357	346	349	364
Na (µg/mL)	247	236	236	240
Ammonia as NH_3 (µg/mL)	< 10	< 10	< 10	< 10
Cl (µg/mL)	2,040	1,290	1,700	2,870
NO_3 as N (µg/mL)	< 10	< 10	< 10	INT
SO_4 (µg/mL)	35,900	38,200	33,900	51,900
Hg (µg/L)	7.4	8.1	7.6	8.3

INT = Interference

F. FGD Makeup Water Samples

One 500 mL of makeup water sample was taken in each test by a plant lab technician. The four makeup water samples are listed in Table 24. The analytical results for the makeup water samples are summarized in Table 25.

Table 24. List of FGD Makeup Water Samples.

Test No.	Test Date	Sample I.D.	Sample Time
1	8.31.2004	FGD Makeup Water 1	13:50
2	9.1.2004	FGD Makeup Water 2	10:07
3	9.1.2004	FGD Makeup Water 3	14:16
4	9.2.2004	FGD Makeup Water 4	9:50

Table 25. Results of Analyses of FGD Makeup Water Samples

Sample ID	FGD Makeup Water - 1	FGD Makeup Water - 2	FGD Makeup Water - 3	FGD Makeup Water - 4
Test No.	1	2	3	4
Sample Date	8/31/2004	9/1/2004	9/1/2004	9/2/2004
Analytical No.	20044618	20044619	20044620	20044621
Ca (µg/mL)	71.5	71.4	69.9	71.0
Total Iron (µg/mL)	0.17	0.2	0.24	0.28
Mg (µg/mL)	5,440	5,440	4,860	4,930
K (µg/mL)	154	160	156	164
Na (µg/mL)	138	140	140	142
Ammonia as NH_3 (µg/mL)	< 10	< 10	< 10	< 10
Cl (µg/mL)	6,910	5,350	4,800	5,850
NO_3 as N (µg/mL)	< 10	< 10	< 10	INT
SO_4 (µg/mL)	< 0.53	< 0.53	< 0.53	< 0.53
Hg (µg/L)	7.0	3.6	2.2	4.4

INT = Interference

G. Trona

Samples of trona powder were taken by the lab technicians of the plant. The volume of sample collected in each test was ~500mL. The sampling time was not recorded on the labels on these plastic bottles. Table 26 summarizes the Trona sample analyses.

Table 26. Results of Analyses of Trona Samples

Sample Description	Trona Test 1	Trona Test 2	Trona Test 3	Trona Test 4
Test Date	8/31/2004	9/1/2004	9/1/2004	9/2/2004
Analytical No.	20044638	20044639	20044640	20044641
Moisture (%)	28.08	28.00	28.07	28.01
Ash (%, dry)	96.75	96.88	96.83	96.89
Carbon (%, dry)	12.53	12.51	12.53	12.52
Chloride (%, dry)	0.15	0.14	0.14	0.16
Hg (ppm, as det'd)	<0.004	<0.004	<0.004	<0.004
Major Ash Elements (%, dry)				
SiO_2	1.44	1.55	1.33	1.30
Al_2O_3	0.25	0.31	0.25	0.26
TiO_2	0.01	0.01	0.01	0.01
Fe_2O_3	0.11	0.13	0.10	0.10
CaO	0.55	0.69	0.67	0.68
MgO	0.47	0.50	0.49	0.48
Na_2O	33.19	33.83	33.45	33.42
K_2O	0.13	0.15	0.14	0.15
P_2O_5	0.02	0.03	0.02	0.02
SO_3	0.04	0.07	0.07	0.05

H. Urea

Urea samples, as 40% aqueous solution, were taken by the plant lab technicians. The volume of sample collected in each test was ~ 500mL. Listed in Table 27 are the urea samples collected. The results of analysis of these samples are summarized in Table 28.

Table 27. List of Urea Samples.

Test No.	Test Date	Sample I.D.	Sample Time
1	8.31.2004	Urea Solution -1	14:10
2	9.1.2004	Urea Solution -2	10:25
3	9.1.2004	Urea Solution -3	14:30
4	9.2.2004	Urea Solution -4	10:00

Table 28. Results of Analysis of Urea Samples.

Sample ID	Urea Solution - 1	Urea Solution - 2	Urea Solution - 3	Urea Solution - 4
Test No.	1	2	3	4
Sample Date	8/31/2004	9/1/2004	9/1/2004	9/2/2004
Analytical No.	20044612	20044613	20044614	20044615
Ca (µg/mL)	2.2	1.8	1.7	1.9
Total Iron (µg/mL)	0.89	< 0.53	0.97	< 0.53
Mg (µg/mL)	< 0.53	< 0.53	1	1
K (µg/mL)	< 5.35	< 5.35	< 5.35	< 5.35
Na (µg/mL)	55.9	49.4	46.1	49.7
Ammonia as NH_3 (µg/mL)	1.67	1.65	1.66	1.68
Cl (µg/mL)	500	500	500	500
Hg (µg/L)	< 1.0	< 1.0	< 1.0	< 1.0

QUALITY ASSURANCE/QUALITY CONTROL

The sampling and analysis QA/QC procedures are described below.

- Personnel specifically trained and experienced in power plant sampling methods, including the Ontario-Hydro mercury sampling method, conducted all sampling,
- The sampling equipment was maintained and calibrated as required,
- Consistent sample preparation and recovery procedures were used,
- Samples were logged and tracked under the direction of sample team Group Leader,
- Individual calibration curves were developed for each sample matrix,
- NIST Standard Reference Material (SRM) and lab QC samples were analyzed to verify calibration curves,
- Duplicates of selected samples were analyzed to assure repeatability,
- Analyses of selected “spiked” samples were analyzed to assure sample recovery, and
- Interim data were reviewed to assure sample completeness.

All samples were obtained using the procedures described in EPA Method 5 and the Ontario-Hydro mercury Speciation draft method. Data were recorded on standard forms, which are included in Appendix A. The field data were reduced using standard “in-house” spreadsheets.

Copies of the summary sheets are included in Appendix A. To assure consistency, all of the Ontario-Hydro train components were prepared and recovered under the supervision of a senior technician experienced in the Ontario-Hydro mercury speciation lab techniques. Copies of the recovery sheets are included in Appendix C.

The Ontario-Hydro sampling train analysis consisted of eight sub-samples. Each sub-sample analysis consisted of developing a calibration curve (absorbance versus mercury concentration in solution), checks of field and lab blanks, calibration checks with SRM and lab standards, selected duplicates and selected sample spikes. The laboratory summaries for each of these runs are contained in Appendix C.

A total of 207 individual Ontario-Hydro mercury determinations were completed. This included 14 blank samples, 30 NIST SRM or lab QC checks, 12 sample spikes, and 13 duplicate analyses.

I. Blank Samples

A total of 14 blank liquid samples were analyzed. The average blank value was <1.0 ng/mL (ppb in solution). The average blank value is much less than any individual Hg^{part}, Hg^{++}, or Hg^{0} determination in ng/mL and, more importantly, is much less than the mercury concentration detection limit (discussed later in this report). Consequently, in this report, blank concentrations were not subtracted out from any mercury determination.

II. NIST SRM Checks

Thirty NIST SRM checks were conducted throughout the mercury determinations. Two standards were used in the determinations as detailed in Table 29.

Table 29. NIST SRM Analyses

NIST SRM	Standard Value (ng/mL)	Sample Fraction	Samples Analyzed	Average Result (ng/mL)	Percent of Standard	Standard Deviation (%)	Percent Relative Standard Deviation
1641D	8.0	Ontario Hydro Liquids	22	7.9	98.8	0.26	3.3
		Ontario Hydro Filters	3	8.0	100.0	0.00	0.00
1633b	149.0	Ontario Hydro Filters	5	144	96.6	13.4	9.3

III. Spike Sample Recoveries

A total of 12 samples were spiked with a 2 or 10 ppb mercury standard and then re-analyzed to determine the percent spike recovery. The result of this QA/QC procedure was an average spike recovery of 86.1% recovery with a ±4.8% standard deviation.

IV. Duplicate Analyses

A total of 13 duplicate analyses were conducted periodically throughout the mercury determinations. The result of this QA/QC procedure was an average mercury determination

that was within 3.0% of the original mercury determination, with a ±7.4% standard deviation. One duplicate was reported at 25 percent less than the original result (0.3 ng/mL) at 0.2 ng/mL, however, as this is the detection limit, it was considered acceptable.

V. Flue Gas Mercury Concentration Detection Limits

For liquid samples, the flue gas mercury concentration was calculated using the following equation:

$$Hg\left[\mu g / m^3\right] = \frac{\left(C_{imp}\ x V_{imp}\right)}{\left(V_{gas}\ x 1000\right)}$$

where:
- C_{imp} = Mercury concentration of impinger solution (ng/mL (ppb))
- V_{imp} = Liquid volume of impinger solution (mL)
- V_{gas} = Flue gas sample volume (dry standard m^3)
- 1000 = Conversion factor (1000 ng per µg)

The flue gas mercury detection limit is reduced when the flue gas sample volume is increased or liquid volume of impinger solution is decreased. The CVAA is calibrated between 0 and 20 ng/mL. Over this range, the calibration curve between absorbance and concentration is linear. The lowest concentration standard used to develop the calibration curve is 0.500 ng/mL. In addition, the detection limit of the liquid CVAA analysis was <1.0 ng/mL. The prescribed sampling and recovery procedures result in final liquid volumes varying between 49 and 861 mL. The volume of flue gas collected varied between 1.047 and 3.218 dscm. The sampling variables result in sample-specific flue gas detection limit. The flue gas mercury detection limit for each sample matrix is listed in Table 30.

Table 30. Flue Gas Hg Detection Limits

Matrix	Maximum Liquid	Minimum Gas	Flue Gas Detection Limit
	Volume (mL)	Volume (dscm)	($\mu g/m^3$)
Probe Rinse	216	1.047	0.2
KCl Impinger	861	1.047	0.8
HNO_3/H_2O_2 Impingers	180	1.047	0.2
$KMnO_4$ Impingers	248	1.047	0.2
HCl Rinse	100	1.047	0.1

Depending on the matrix, the flue gas mercury detection limit ranged from 0.1-0.8 $\mu g/m^3$.

VI. Mercury Material Balance Closure

To calculate the material balance closure for mercury, the mass flow rate of mercury in each stream entering and leaving the plant must be calculated. Streams entering the plant are coal, lime slurry, FGD makeup water, and mist eliminator (ME) wash water. Streams leaving the plant are bottom ash, ESP hopper ash, FGD slurry, and stack flow gas. The mass flow rate of mercury in each stream is simply the product of the mass flow rate of each stream times the mercury concentration in that stream. The mass flow rates of urea, Trona, and mill rejects were too small to have any effect on the mercury material balance.

A. Mercury Input from Coal

Summarized in Table 31 are the inputs of mercury from coal calculated based on the four coal samples collected during the tests. The mercury inputs from coal range from 15.7 to 19.6 mg/sec.

Table 31. Mercury Input from Coal

Test No.	1	2	3	4
Coal feed rate (kpph, as det'd basis)	1,154	1,121	1,153	1,122
Coal feed rate (kpph, dry)	1,177	1,102	1,131	1,102
Coal moisture content (as det'd, %)	1.98	1.73	1.96	1.77
Coal mercury content (ppm, as det'd basis)	0.127	0.111	0.135	0.123
Mercury input from coal (mg/sec)	18.8	15.7	19.6	17.4

B. Mercury Input from Lime Slurry

The mass flow rate of the lime slurry entering the FGD in each test was calculated based primarily on the amount of SO_2 removed by the FGD, which was the difference between the amount of SO_2 (reported as S) from coal (see analytical results in Table 11) and the sum of the amounts of SO_2 (reported as SO_3 in the major ash) measured in the bottom ash (see analytical results in Table 12) and the ESP hopper ash (see analytical results in Tables 14-17). It was also assumed that the lime utilization rate was 99%, a typical design value.

Each lime slurry sample was filtered to generate a separate solids and filtrate sample. The amounts of mercury in the dried solids and filtrate samples were determined separately. The mercury in the lime slurry solids samples was less than the detection limit of 0.004 ppm. To calculate the mass flow rate, a value equal to half of the detection limit was used, i.e., 0.002 ppm. The mercury in the lime slurry liquid (i.e., filtrate) samples was less than the detection limit of 0.1 ppb. To calculate the mass flow rate, a value equal to half of the detection limit was used, i.e., 0.05 ppb.

Summarized in Table 32 are the inputs of mercury calculated based on the four lime slurry samples collected during the four tests conducted at the plant. The mercury inputs from the lime slurry range from 0.025 to 0.028 mg/sec.

Table 32. Mercury Input from Lime Slurry

Test No.	1	2	3	4
Sulfur input from coal (kpph)	44.1	39.9	42.5	40.8
Sulfur out via bottom ash (kpph)	0.03	0.03	0.03	0.01
Sulfur out via ESP ash(kpph)	0.91	0.72	0.81	0.85
Sulfur entered FGD (kpph)	43.1	39.1	41.7	39.9
SO_2 entered FGD (kpph)	86.3	78.3	83.4	79.8
Stack SO_2 Emissions, EPA data (kpph)	2.80	3.51	3.22	4.01
SO_2 removed by FGD (kpph)	83.5	74.8	80.2	75.8
Lime utilization rate (%)	99			
Lime slurry mass flow rate (kpph)	503	448	479	456
Lime slurry solids mass flow rate (kpph, as det'd)	100.6	89.6	95.7	91.1
Hg in lime slurry solids (ppm, as det'd)	0.002	0.002	0.002	0.002
Lime slurry filtrate mass flow rate (kpph)	402	358	383	365
Hg in lime slurry filtrate (ppb)	0.05	0.05	0.05	0.05
Mercury input from lime slurry (mg/sec)	0.028	0.025	0.027	0.025

C. Mercury Input from FGD Makeup Water

The flow rate of the FGD makeup water was calculated based on the fact that a constant level of liquor in the scrubber modules had to be maintained. In other words, the volumetric flow rates of process streams entering the FGD must be balanced by the volumetric flow rates of

process streams leaving the FGD. Two streams left the FGD, moisture-saturated stack flue gas and FGD blowdown. The volumetric flow rate of water via the stack flue gas was calculated based on the flue gas moisture concentration (measured by the Ontario-Hydro method during mercury sampling) and the measured flue gas flow rate. The volumetric flow rate of the FGD blowdown was calculated based on the amounts of SO_2 removed and the properties of the FGD slurry sample (see Tables 22 and 23) collected in each test.

Water entered the FGD from coal (free moisture and coal hydrogen), lime slurry, ME wash water, centrate return and FGD makeup water. The volumetric flow rate of water from coal was calculated based on the coal analysis data and coal consumption rate. The volumetric flow rate of lime slurry was calculated based on the amount of sulfur removed by FGD and the lime slurry properties (see Tables 19 and 20). The volumetric flow rate of the ME wash water was assumed to be 1,300 gpm through out all four tests. (This was based on a very conservative design value of 1.0 gpm/MW.) The volumetric flow rate of the centrate return was the difference between the volumetric rate of FGD blowdown and the volumetric rate of centrifuge cake, which contained 40% free moisture. The volumetric flow rates of the FGD makeup water were calculated and their values ranged from 282 to 917 gpm. Assuming that the density of the makeup water is 1.0 g/mL, the mass flow rates of the makeup water were calculated; their values ranged from 148 to 464 kpph.

The mercury input from the makeup water was calculated as the product of the makeup water flow rate and the measured mercury concentration in the makeup water (see Table 24). Summarized in Table 33 are the inputs of mercury based on the four FGD makeup water samples collected during the four tests conducted. The mercury inputs from the FGD makeup water range from 0.13 to 0.27 mg/sec.

Table 33. Mercury Input from FGD Makeup Water

Test No.	1	2	3	4
Water output via stack gas, based on O.H data (kpph)	1,670	1,730	1,720	1,790
Water output via stack gas (gpm)	3,170	3,290	3,280	3,410
Volumetric flow of FGD blowdown (gpm)	7,530	6,180	7,310	6,030
Total Water Output from FGD (gpm)	10,700	9,470	10,590	9,440
Water input from coal moisture (kpph)	23.3	19.4	22.6	19.9
Water input from hydrogen in coal (kpph)	461	428	431	448
Water input from coal (kpph)	484	448	453	468
Water input from coal (gpm)	923	853	863	892
Water input from lime slurry (kpph)	404	360	384	366
Water input from lime slurry (gpm)	769	686	732	698
Water input from ME Wash Water (gpm)	1,300	1,300	1,300	1,300
Water from Centrate return (gpm)	7,430	5,850	6,810	5,630
Water input from FGD Makeup (gpm)	282	787	884	917
Water input from FGD Makeup (kpph)	148	413	464	482
Hg in FGD makeup water (ppb)	7.0	3.6	2.2	4.4
Mercury input from FGD slurry (mg/sec)	0.13	0.19	0.13	0.27

D. Mercury Output via Bottom Ash

Summarized in Table 34 are the outputs of mercury calculated based on the four bottom ash samples collected during the four tests conducted. The mercury outputs via the bottom ash range from 0.005 to 0.006 mg/sec.

Table 34. Mercury Output via Bottom Ash

Test No.	1	2	3	4
Bottom ash mass flow rate (kpph)	22.28	20.57	22.16	21.06
Moisture content in bottom ash (%)	0.01	0.01	0.01	0.01
Ash content in bottom ash (%)	100.67	101.45	100.76	100.49
Carbon content in bottom ash (%)	0.13	0.03	0.04	0.03
Hg content in bottom ash (%)	0.002	0.002	0.002	0.002
Mercury output via (mg/sec)	0.006	0.005	0.006	0.005

E. Mercury Output via ESP Hopper Ash

Samples were collected from several ESP ash hoppers during each test. Each sample was analyzed separately. The results of analysis of the ESP hopper ash samples were presented earlier in Tables 14 through 17. For material balance calculation purposes, the concentration of mercury in the "combined" ESP ash is calculated by the following formula suggested by the plant.

> 0.9*[average concentration of Hg in samples collected in the first field] + 0.1*[average concentration of Hg in samples collected in the second and third fields]

Summarized in Table 35 are the outputs of mercury from each of the four ESP ash samples collected during the tests. The mercury outputs via the ESP hopper ash for the four tests conducted range from 0.44 to 0.55 mg/sec.

Table 35. Mercury Output via ESP Hopper Ash

Test No.	1	2	3	4
ESP hopper ash mass flow rate (kpph)	90.4	83.4	89.8	85.4
Moisture content in ESP hopper ash (%)	0.26	0.06	0.17	0.23
Ash content in ESP hopper ash (%)	97.9	98.2	98.3	98.2
Carbon content in ESP hopper ash (%)	1.31	1.28	1.14	1.16
Hg content in ESP hopper ash (%)	0.048	0.047	0.039	0.044
Mercury output via ESP hopper ash (mg/sec)	0.55	0.49	0.44	0.47

F. Mercury Output via FGD Slurry

Each FGD slurry sample was filtered to generate a residual solid (i.e., filter cake) and a filtrate sample, which were analyzed separately. The results of analyses of the solid and filtrate samples were previously reported in Tables 22 and 23, respectively.

Once the amounts of SO_2 removed by the FGD were calculated (see Section B above), the mass flow rates of FGD blowdown could then be calculated by using the calcium oxide (CaO) as the tie-element, which must be balanced around the FGD. Summarized in Table 36 are the mercury inputs from lime slurry for each of the four tests conducted. The mercury output via the FGD slurry for Tests 1, 2, 3, and 4 are 16.6, 12.5, 13.4, and 11.9 mg/sec, respectively.

Table 36. Mercury Output via FGD Slurry

Test No.	1	2	3	4
SO_2 removed by FGD (kpph)	83.5	74.8	80.2	75.8
FGD slurry mass flow rate (kpph)	4,250	3,490	4,120	3,400
FGD slurry solids mass flow rate (kpph, as det'd)	208	167	218	177
Hg in FGD slurry solids (ppm, as det'd)	0.49	0.43	0.35	0.39
FGD slurry filtrate mass flow rate (kpph)	4,040	3,320	3,900	3,220
Hg in FGD slurry filtrate (ppb)	7.4	8.1	7.6	8.3
Mercury input from FGD slurry (mg/sec)	16.6	12.5	13.4	11.9

G. Mercury Output via Stack Flue Gas

The amount of Hg in the stack flue gas was calculated based on the Ontario-Hydro data and the results of the mercury output via the stack flue gas are summarized in Table 37. The Hg flow rates at the stack for Tests 1, 2, 3, and 4 were 0.021, 0.012, 0.010, and 0.016 lb/hr, respectively. The Hg outputs via the stack flue gas were 2.63, 1.53, 1.21, and 2.04 mg/sec, respectively.

Table 37. Mercury Output via Stack Flue Gas

Test No.	1	2	3	4
Stack gas flow rate (Nm^3/min)	93,981	92,899	93,459	97,968
Hg concentration in stack gas ($\mu g/m^3$)	1.68	0.99	0.78	1.25
Hg flow rate at stack (lb/hr)	0.021	0.012	0.010	0.016
Hg output via stack flue gas (mg/sec)	2.63	1.53	1.21	2.04

H. Stack Mercury Emission

From the coal analysis data (Table 11) and the mercury output via the stack flue gas (Table 36), the *heat input* based mercury emission from the stack can be calculated and the results are summarized in Table 38. The mercury emissions for the four tests conducted ranged from 0.64 to 1.36 lb/TBtu and the average emission is 0.98 lb/TBtu.

Table 38. Stack Mercury Emission

Test No.	1	2	3	4
Coal-firing rate (kpph, dry)	1,177	1,102	1,131	1,102
Coal heating value (Btu/lb, dry)	13,357	13,502	13,300	13,326
Boiler heat input (mm Btu/hr)	15,414	14,877	15,045	14,688
Stack Hg mass flow rate (lb/hr)	0.021	0.012	0.010	0.016
Stack Hg emission (lb/TBtu)	1.36	0.82	0.64	1.10
Average stack Hg emissions (lb/TBtu)	0.98			

I. Material Balance Closure for Mercury

The mercury material balance closure is defined as the total mercury output from the plant divided by the total mercury input (expressed as %). The total mercury input is the sum of the amounts of mercury in the coal, lime slurry and FGD makeup water entering the plant. The total mercury output is the sum of the amounts of mercury leaving the plant via bottom ash, ESP hopper ash, FGD slurry blowdown, and stack flue gas. The contributions of mercury from mill rejects, urea, and Trona were excluded from the material balance calculation, because the mass or volumetric flow rates of these streams were very low and could not significantly affect the balances. During the tests, the volumes of mill rejects collected were less than 5 gallons. The concentrations of mercury in Trona (Table 25) and urea solution (Table 27) were found to be very low. During normal operations, freshly treated water was used to wash the mist eliminators inside the scrubber modules. CONSOL's experience indicates that the concentrations of mercury in the freshly treated water were near or below the detection limit of 1.0 ppb.

Table 39 summarizes the mercury material balance closures for the four tests conducted at the plant. The calculated material balance closures for mercury ranged from 76% to 104%, which are within the QA/QC criterion of 70-130% for a single test. The average value is 88%, which is within the QA/QC criterion of 80-120% for multiple tests.

Table 39. Summary of Material Balance Closure for Hg.

Test No.	1	2	3	4
Hg input from coal (mg/sec)	18.8	15.7	19.6	17.4
Hg input from lime slurry (mg/sec)	0.028	0.025	0.027	0.025
Hg input from FGD makeup water (mg/sec)	0.13	0.19	0.13	0.27
Total Hg input (mg/sec)	19.0	15.9	19.8	17.7
Hg output via bottom ash (mg/sec)	0.006	0.005	0.006	0.005
Hg output via ESP ash (mg/sec)	0.55	0.49	0.44	0.47
Hg output via FGD slurry (mg/sec)	16.6	12.5	13.4	11.9
Hg output via stack flue gas (mg/sec)	2.63	1.53	1.21	2.04
Total Hg output (mg/sec)	19.8	14.5	15.1	14.5
Hg material balance closure (output / input)	104%	91%	76%	82%
Average Hg material balance closure	88 ±12%			

J. Material Balance Closure for SiO_2, Al_2O_3 and CaO

By following the above procedures, the material balance closure for three major ash oxides, SiO_2, Al_2O_3 and CaO, can also be calculated. Summarized in Tables 40, 41 and 42 are the results of the material balance closure calculated for these three oxides. The material balance closures for SiO_2, Al_2O_3 and CaO range from 97% to 101%, 95% to 99%, and 99% to 100%,

respectively. The average material balance closures for SiO_2, Al_2O_3 and CaO are 98%, 97% and 100% respectively.

The material balance closures for these three oxides for all the four tests are within the QA/QC criterion of 70-130% for a single test and the average material balance closures are within the QA/QC criterion of 80-120% for multiple tests.

Table 40. Summary of Material Balance Closure for SiO_2.

Test No.	1	2	3	4
SiO_2 input from coal (kpph)	48.1	43.9	48.2	45.8
SiO_2 input from lime slurry (kpph)	1.39	1.19	1.33	1.29
Total SiO_2 Input (kpph)	49.5	45.1	49.5	47.1
SiO_2 output via bottom ash (kpph)	8.1	7.9	9.2	8.7
SiO_2 output via ESP hopper ash (kpph)	38.1	35.7	37.7	35.0
SiO_2 output via FGD slurry (kpph)	2.29	1.82	1.77	1.75
Total SiO_2 output (kpph)	48.5	45.4	48.7	45.5
SiO_2 Material Balance Closure (output / input)	98.%	101%	98%	97%
Average SiO_2 Material Balance Closure	98 ±2%			

Table 41. Summary of Material Balance Closure for Al_2O_3.

Test No.	1	2	3	4
Al_2O_3 input from coal (kpph)	23.5	21.4	23.5	21.9
Al_2O_3 input from Lime slurry (kpph)	0.43	0.42	0.43	0.4
Total Al_2O_3 Input (kpph)	24.0	21.8	24.0	22.3
Al_2O_3 output via bottom ash (kpph)	3.93	3.79	4.41	4.2
Al_2O_3 output via ESP hopper ash (kpph)	18.4	17.3	18.3	16.9
Al_2O_3 output via FGD slurry (kpph)	0.57	0.51	0.54	0.5
Total Al_2O_3 Output (kpph)	22.9	21.6	23.3	21.6
Al_2O_3 Material Balance Closure (output / input)	95%	99%	97%	97%
Average Al_2O_3 Material Balance Closure	97 ±1%			

Table 42. Summary of Material Balance Closure for CaO.

Test No.	1	2	3	4
CaO input from coal (kpph)	3.26	3.26	3.5	3.27
CaO input from lime slurry (kpph)	68.9	61.8	66.2	62.6
CaO input from FGD makeup water (kpph)	0.01	0.04	0.05	0.05
Total CaO Input (kpph)	72.2	65.1	69.8	66.0
CaO output via bottom ash (kpph)	0.57	0.54	0.62	0.58
CaO output via ESP hopper ash (kpph)	2.69	2.32	2.42	2.19
CaO output via FGD slurry (kpph)	69.2	61.9	66.3	62.7
Total CaO Output (kpph)	72.5	64.7	69.4	65.4
CaO Material Balance Closure (output / input)	100%	100%	99%	99%
Average CaO Material Balance Closure	100 ±1%			

The fact that the material balance closures for mercury, SiO_2, Al_2O_3 and CaO fall in the QA/QC criteria indicate that the overall quality is excellent.

K. Estimated SO_2 Removal Efficiency by FGD

Although the actual SO_2 emission rates at the stack were not provided by the plant, the SO_2 removal efficiencies by the FGD could be estimated using EPA's hourly emissions data[3] and the coal sulfur contents in the coal samples collected during the tests. Relevant emission data are compiled in Appendix. The SO_2 emission rates for Tests 1, 2, 3, and 4 were calculated to be 2.75, 3.51, 3.22 and 4.01 kpph, respectively. Since the sulfur contents in coal, bottom ash, and ESP hopper ash samples were measured and the mass flow rates of these streams were calculated, the amounts of SO_2 entering FGD could be calculated. The SO_2 removal efficiencies by the FGD during Tests 1, 2, 3, and 4 were calculated to be 96.8%, 95.5%, 96.1%, and 95.0%, respectively. The average SO_2 removal efficiency was 95.9%. The results of the above calculations are summarized in Table 43.

[3] U.S. Environmental Protection Agency, Acid Rain/OTC Program Hourly Emissions Data, http://www.epa.gov/airmarkets/emissions/raw/index.html

Table 43. SO2 Removal Efficiency by FGD

Test No.	1	2	3	4
Coal-firing rate (kpph, dry)	1,154	1,1026	1,131	1,102
S content in coal (%, dry)	3.82	3.62	3.76	3.70
S input from coal (kpph)	44.1	39.9	42.5	40.8
Bottom ash mass flow rate (kpph)	22.3	20.6	22.2	21.1
S content in bottom ash (%, dry)	0.14	0.014	0.12	0.04
S output via bottom ash	0.03	0.03	0.03	0.01
ESP ash mass flow rate (kpph)	90.4	83.4	89.8	85.4
S content in ESP ash (%, dry)	1.04	0.88	0.091	1.01
S output via ESP ash	0.91	0.72	0.81	0.85
S entering FGD (kpph)	43.1	39.1	41.7	39.9
SO_2 entering FGD (kpph)	86.3	78.3	83.4	79.9
Stack SO_2 emission (kpph)	2.79	3.51	3.22	4.01
SO_2 removal efficiency	96.8%	95.5%	96.1%	95.0%
Average SO_2 removal efficiency	95.9%			

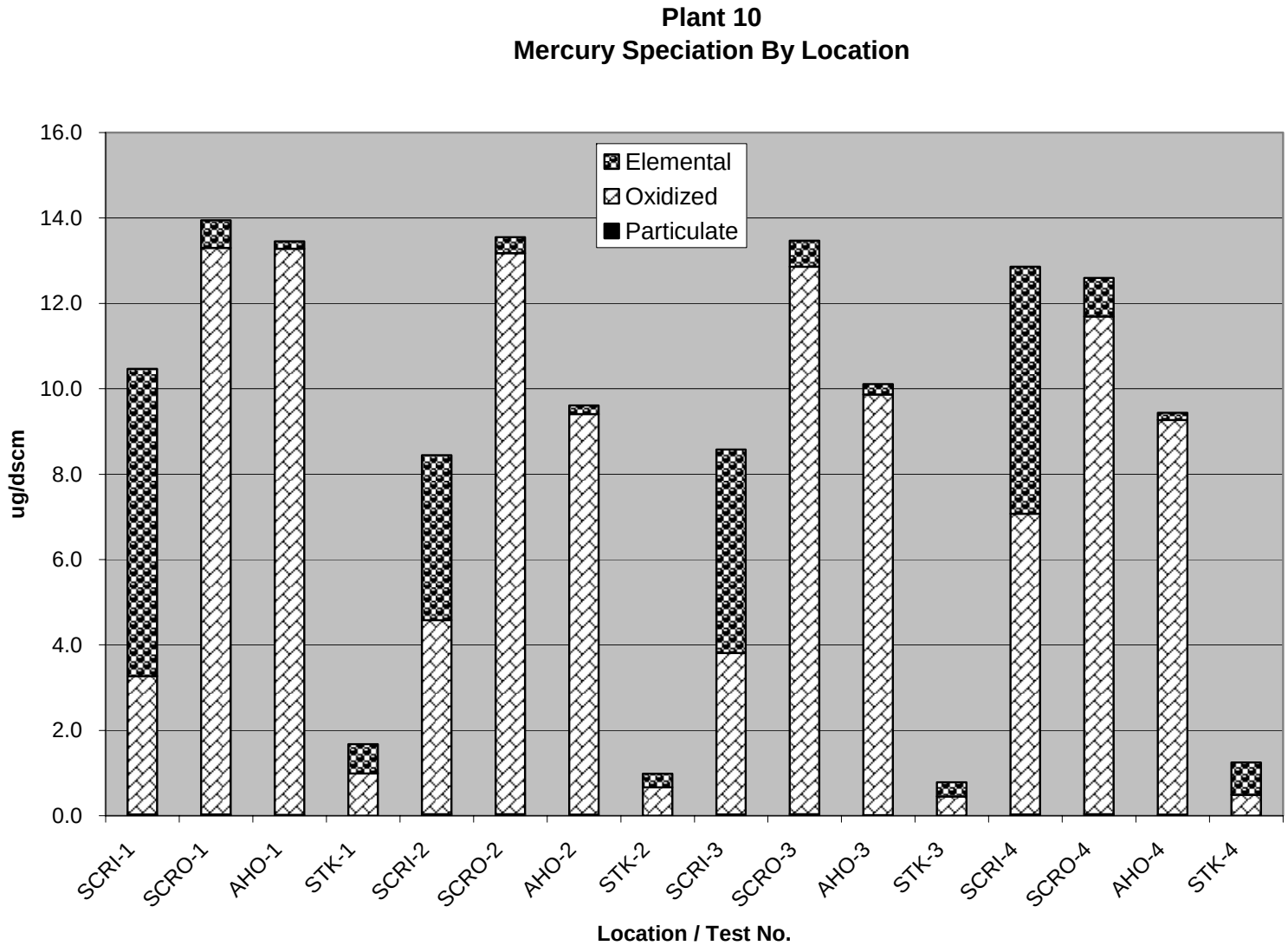

Figure 1. Mercury Speciation.

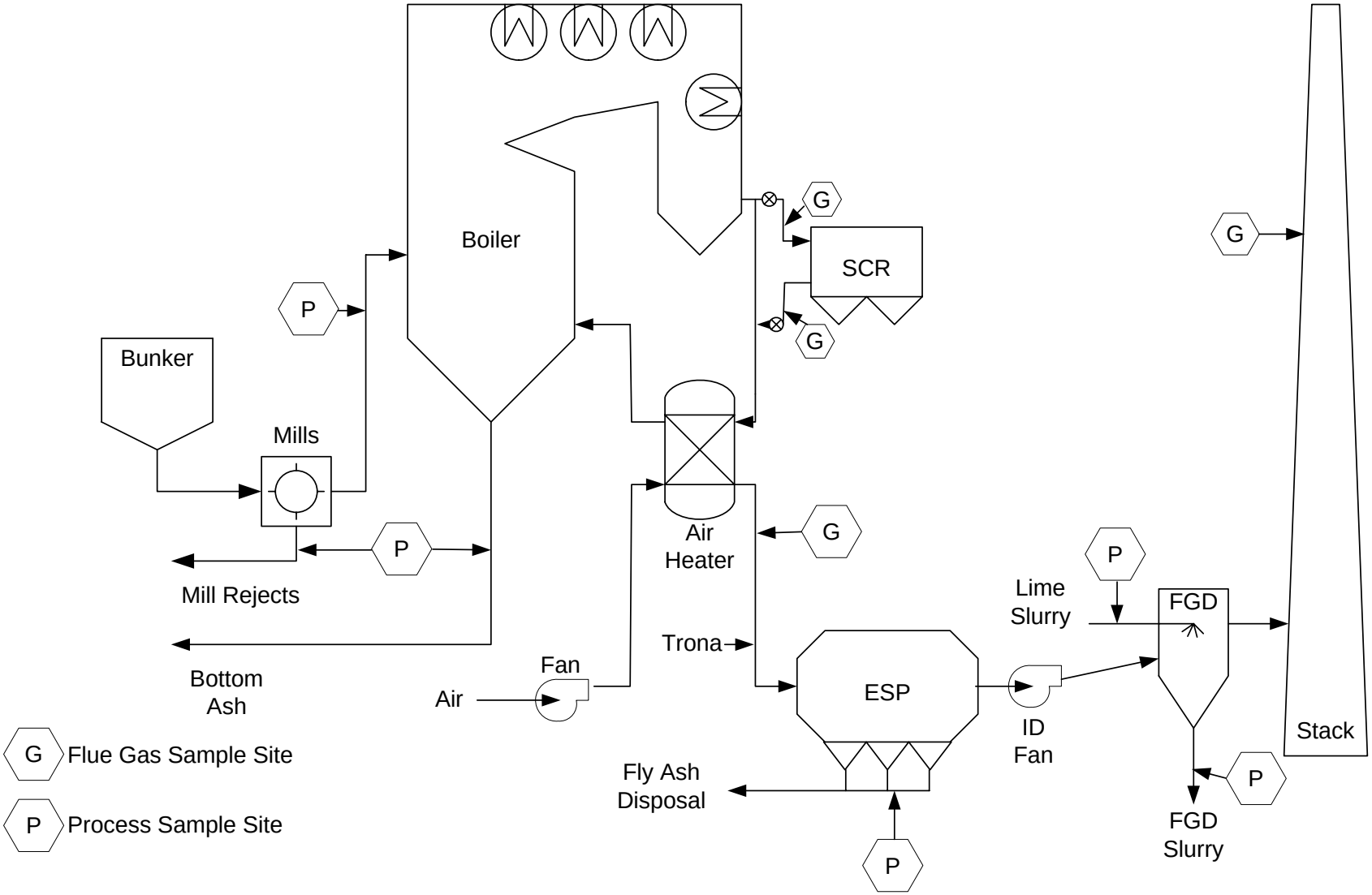

Figure 2. Process Flow Schematic

Figure 3. SCR Inlet Mercury Sampling Train

Figure 4. SCR Outlet Mercury Sampling Train

Figure 5. Air Heater Outlet Mercury Sampling Train

Figure 6. Stack mercury Sampling Train

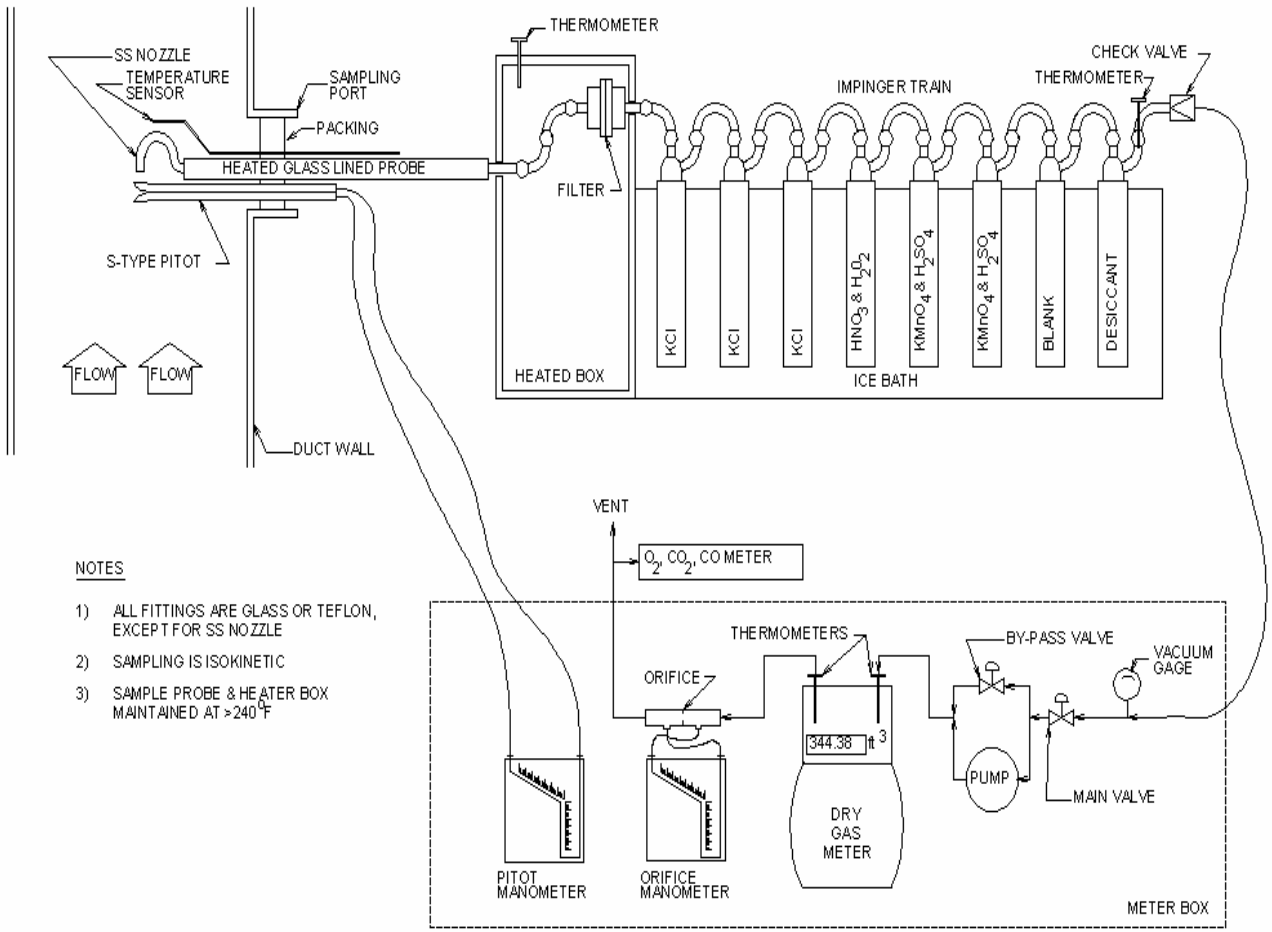

Figure 7. Ontario-Hydro Sampling Train Schematic

ESP Ash Hopper Layout - Upper Level					
35 U	**31 U**	**25 U**	**21 U**	**15 U**	**11 U**
36 U	32 U	**26 U**	22 U	16 U	**12 U**
37 U	33 U	**27 U**	23 U	17 U	13 U

↓

stack

ESP Ash Hopper Layout - Lower Level					
35 L	**31 L**	**25 L**	**21 L**	**15 L**	**11 L**
36 L	**32 L**	26 L	22 L	**16 L**	12 L
37 L	33 L	27 L	23 L	**17 L**	13 L

↓

stack

Figure 8. Layout of ESP Ash Hoppers

Figure 9. ESP hopper ash sampling

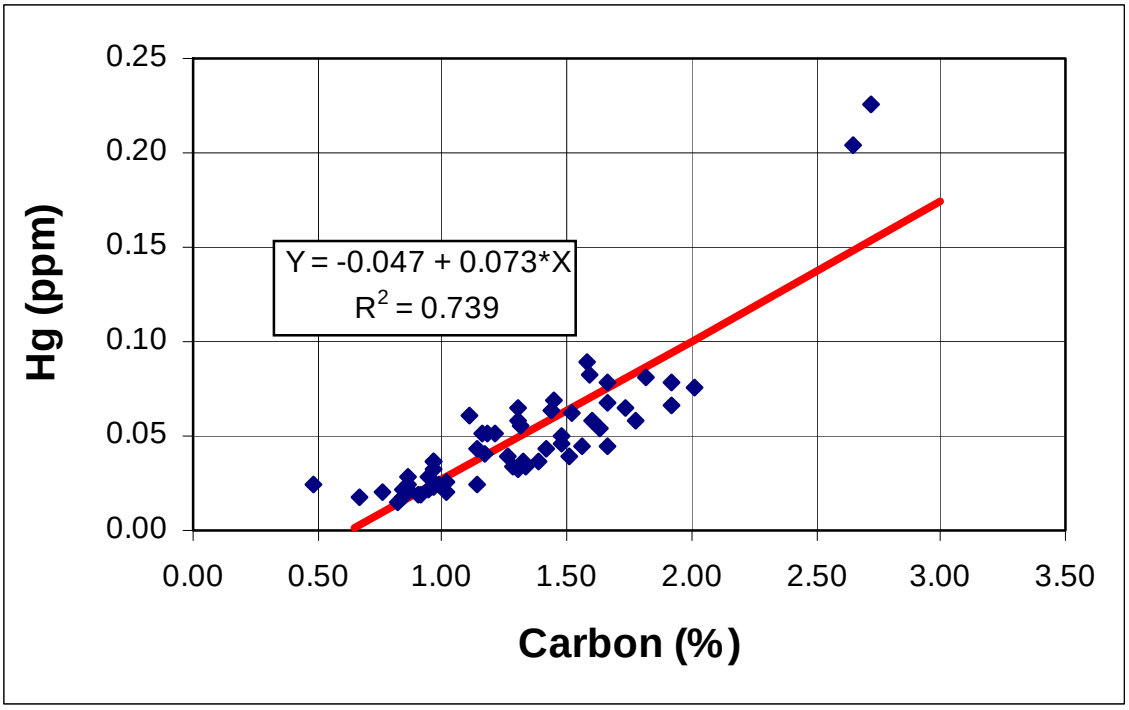

Figure 10. Mercury Concentration vs. Carbon Content in ESP Ash Samples

Figure 11. FGD slurry sampling location

APPENDIX A

Mercury Sampling Data

- Field Data Sheets
- Mercury Measurement Data Sheets

ONTARIO HYDRO Hg SAMPLING AND SPECIATION FIELD DATA SHEET

TEST ID	SCRI-1	METER BOX	N-4	CAL. DATA: delta H	1.932
PLANT	Plant 10	PITOT TUBE DESC	E-4	Y	0.962
LOCATION	SCR Inlet	PROBE LENGTH [ft]	8	C(p)	0.850
DATE	8/31/04	NOZZLE ID [inch]	0.248 1/4"	FILTER BOX SETTING	325
OPERATOR(S)	JEL/SJK	%H_2O (Assumed)	8	PROBE HTR SETTING	325
AMBIENT TEMP [°F]	105	FILTER ID	1	DUCT X-SECTION	circ ? / rect ? / other:
BAR. PRESS. [" Hg]	29.5	K FACTOR	1.90	DUCT DIMENSIONS / DUCT AREA	

Comments: Single Port, Single Point, 10 minute readings

TRAVERSE POINT [port-inch]	CLOCK TIME (24-hr)	SAMPLE TIME [minute]	STATIC PRES [" H_2O]	PITOT HEAD [" H_2O]	METER DIFF PRESSURE [" H_2O]	METER VACUUM [" Hg]	METER READING [ft^3]	METER TEMP [oF] inlet	METER TEMP [oF] outlet	STACK TEMP [°F]	PROBE TEMP [°F]	FILTER BOX [°F]	LAST IMP TEMP [°F]	METER EXHAUST O_2 [% vol]	METER EXHAUST CO_2 [% vol]
	1345	0					52.42								
B- -1	1355	10	~~-8.30~~	0.30	0.56	4	56.75	107	104	639	321		65	4.3	
	1405	20	-8.04	0.30	0.56	5	61.10	108	106	640	320		61	3.9	
	1415	30		0.30	0.56	6	65.48	110	107	639	320		60	4.1	
	1425	40	-7.85	0.30	0.56	7	69.72	109	107	639	321		63	4.0	
	1435	50		0.30	0.56	8.5	74.01	109	106	642	321		65	4.1	
	1445	60	-7.90	0.30	0.56	10	78.33	108	106	640	321		63	3.7	
	1455	70		0.30	0.56	11	82.65	108	105	641	321		54	3.8	
	1505	80	-7.58	0.30	0.56	13	86.98	108	105	637	320		54	4.1	
	1515	90		0.26	0.49	12	91.04	108	106	638	320		55	4.2	
	1525	100	-7.38	0.26	0.49	14	95.10	108	105	638	321		57	3.8	
	1535	110		0.26	0.49	15	99.15	108	105	640	321		57	3.9	
	1545	120	-7.96	0.26	0.49	17	103.20	108	105	641	320		58	4.1	
AVERAGE			-7.79	0.286	0.537		50.78	106.9		639.5				4.0	

Sample Train Leak Checks: Pre Test <0.01 ft^3 @ 10 in. Hg; Post Test _____ ft^3 @ _____ in. Hg

Pitot Tube Leak Checks: PreTest <0.01 @ 7 in. H_2O; Post Test _____ @ _____ in. H_2O

CONSOLENERGY

NOTE: Purge for 10 minutes at end of sampling.

ONTARIO HYDRO Hg SAMPLING AND SPECIATION FIELD DATA SHEET

Page _____ of _____

TEST ID	SCRO- ONE	METER BOX	N-3	CAL. DATA: delta H	1.916
PLANT	Plant 10	PITOT TUBE DESC	E-15	Y	1.038
LOCATION	SCR outlet	PROBE LENGTH [ft]	8	C(p)	0.838
DATE	8/31/04	NOZZLE ID [inch]	3/16 E 0.183	FILTER BOX SETTING	NA
OPERATOR(S)	JMW UBC	%H_2O (Assumed)	8	PROBE HTR SETTING	325
AMBIENT TEMP [°F]	110	FILTER ID	6	DUCT X-SECTION	circ ? rect ? other:
BAR. PRESS. [" Hg]	29.50	K FACTOR	0.54	DUCT DIMENSIONS / DUCT AREA	

Comments: Four Ports, single point, 10 minute readings

TRAVERSE POINT [port-inch]	CLOCK TIME (24-hr)	SAMPLE TIME [minute]	STATIC PRES [" H_2O]	PITOT HEAD [" H_2O]	METER DIFF PRESSURE [" H_2O]	METER VACUUM [" Hg]	METER READING [ft^3]	METER TEMP (6) [oF] (7) inlet	METER TEMP (6) [oF] (7) outlet	STACK TEMP (1) [°F]	PROBE TEMP (2) [°F]	FILTER BOX [°F]	LAST IMP TEMP (4) [°F]	METER EXHAUST O_2 [% vol]	METER EXHAUST CO_2 [% vol]	
B-duct	13:45	0					121.64									O_2 meter calib. check
6" -1	13:55	10		0.75	0.41	4.5	125.00	108	107	666	329	NA	61	5.8	14.3	
	14:05	20	-10.56	0.73	0.39	5.5	128.34	104	104	665	330	NA	55	5.3	14.8	
	14:15	30		0.72	0.39	6.0	131.62	105	104	668	328	NA	56	5.2	14.9	21.0 Meter
				leak check dead step @ -15"												
	14:24						132.18									
-1	14:34	40		0.66	0.36	7.0	135.25	108	107	676	336	NA	58	4.9	15.2	
	14:44	50	-11.69	0.66	0.36	8.0	138.50	108	107	677	333	NA	57	5.0	15.1	
	14:54	60		0.68	0.37	9.0	141.58	108	107	677	338	NA	57	4.4	15.7	
				leak check - dead step @ -14" Hg												
	15:00						142.60									
-1	15:10	70		0.61	0.33	7.0	145.65	108	107	675	329	NA	61	4.1	16.0	
	15:20	80	-10.75	0.62	0.33	8.0	148.70	108	107	675	338	NA	56	4.4	15.7	20.9 OK
	15:30	90		0.64	0.35	9.0	151.84	108	107	674	328	NA	55	4.0	16.1	
				leak check dead step @ -14" Hg												
	15:37						152.70									
-1	15:47	100		0.79	0.43	8.0	156.19	109	108	675	337	NA	56	4.1	16.0	
	15:57	110	-11.71	0.82	0.44	9.0	159.69	109	108	676	335	NA	55	4.2	15.9	
	16:07	120		0.88	0.48	11.0	163.34	109	108	677	330	NA	56	4.3	15.8	
				AVG												
AVERAGE			-11.18	0.711	0.387		39.26		107.2	673.4				4.64	15.46	

Sample Train Leak Checks: Pre Test dead step ft^3 @ -12 in. Hg; Post Test dead step ft^3 @ -15 in. Hg

Pitot Tube Leak Checks: PreTest OK @ -8" in. H_2O; Post Test _____ @ _____ in. H_2O

NOTE: Purge for 10 minutes at end of sampling.

CONSOLENERGY

Post-test air purge for 10 min @ ΔH = 0.6

ONTARIO HYDRO Hg SAMPLING AND SPECIATION FIELD DATA SHEET

Page ____ of ____

TEST ID	AHO- 1	METER BOX	N-2	CAL. DATA: delta H	1.956
PLANT	Plant 10	PITOT TUBE DESC	5-3	Y	0.976
LOCATION	Air Heater Outlet	PROBE LENGTH [ft]	~~8~~ 6'	C(p)	
DATE	8/31/04	NOZZLE ID [inch]	3/16A - 0.189	FILTER BOX SETTING	
OPERATOR(S)	ELC/BPS	%H_2O (Assumed)		PROBE HTR SETTING	325
AMBIENT TEMP [°F]	105	FILTER ID	11	DUCT X-SECTION	circ ? / rect ? / other:
BAR. PRESS. [" Hg]	29.50	K FACTOR	0.867	DUCT DIMENSIONS / DUCT AREA	

Comments: Three ports, ~~two~~ ONE points each, 10 minute readings

SOOTBLOWING: 1435 - 1530

PROBE TC IN ERROR

TRAVERSE POINT [port-inch]	CLOCK TIME (24-hr)	SAMPLE TIME [minute]	STATIC PRES [" H_2O]	PITOT HEAD [" H_2O]	METER DIFF PRESSURE [" H_2O]	METER VACUUM [" Hg]	METER READING [ft^3]	METER TEMP [oF] (6) inlet	METER TEMP [oF] (7) outlet	STACK (1) TEMP [°F]	PROBE TEMP [°F]	FILTER BOX [°F]	LAST IMP (4) TEMP [°F]	METER EXHAUST O_2 [% vol]	METER EXHAUST CO_2 [% vol]
B-duct	1345	0					598.20								
-90		10		0.65	0.56	4.0	602.44	110	106	344	195		62	4.1	16.0
-90		20	-21.84	0.65	0.56	5.0	606.63	112	108	344	185		60	4.2	15.9
B-3 -30 @ 58"		30		0.65	0.56	5.5	610.81	112	108	345	190		58	4.0	16.1
-30		40		0.65	0.56	6.0	615.01	113	109	345	193		59	4.5	15.6
				LEAK check OK - RESTART @ 2											
	1432						615.70	~~114~~	~~111~~	~~360~~	~~197~~		~~63~~		
-90		50		0.59	0.50	4.5	619.765	114	111	360	197		63	4.8	15.3
B-6 -90 @ 58"		60	-22.10	0.59	0.50	5.0	623.77	114	111	363	198		62	4.5	15.6
-30		70		0.59	0.50	6.0	627.77	113	111	362	199		57	4.9	15.2
-30		80		0.59	0.50	6.5	631.78	113	111	362	200		57	4.2	16.0
				LEAK check OK RESTART @ 2											
	1518						632.10								
-90		90		0.49	0.43	4.0	635.87	111	110	363	196		64	4.4	15.7
-90		100		0.50	0.44	5.0	639.61	111	109	365	198		62	4.6	15.5
B-10 -30 @ 58"		110	-21.26	0.51	0.44	5.0	643.X	111	109	368	196		63	4.4	15.7
-30	1558	120		0.51	0.44	6.0	647.12	111	109	366	181		65	4.7	15.4
				RKS											
AVERAGE			-21.73	0.554	0.50		47.91	110.7		357.3				4.4	15.7

Sample Train Pre Test 0.005 ft^3 @ 10 in. Hg
Leak Checks: Post Test 0 ft^3 @ 10 in. Hg

Pitot Tube PreTest 0 @ 5 in. H_2O
Leak Checks: Post Test 1 @ ____ in. H_2O

CONSOLENERGY

✓ NOTE: Purge for 10 minutes at end of sampling.

Test #1

ONTARIO HYDRO Hg SAMPLING AND SPECIATION FIELD DATA SHEET

Page _____ of _____

TEST ID	STK-
PLANT	Plant 10
LOCATION	Stack
DATE	8/31/04
OPERATOR(S)	KRC, RW
AMBIENT TEMP [°F]	
BAR. PRESS. [" Hg]	29.50

METER BOX	5
PITOT TUBE DESC	E-11A
PROBE LENGTH [ft]	10
NOZZLE ID [inch]	0.213
%H_2O (Assumed)	
FILTER ID	1
K FACTOR	1.05

CAL. DATA: delta H	2.00
Y	1.006
C(p)	
FILTER BOX SETTING	
PROBE HTR SETTING	
DUCT X-SECTION	circ ? / rect ? / other:
DUCT DIMENSIONS	42"
DUCT AREA	1385.18 ft^2

Comments: Single Port, Single Point, 10 minute readings
- Sample probe rotated ±40° into flow

TRAVERSE POINT [port-inch]	CLOCK TIME (24-hr)	SAMPLE TIME [minute]	STATIC PRES [" H_2O]	PITOT HEAD [" H_2O]	METER DIFF PRESSURE [" H_2O]	METER VACUUM [" Hg]	METER READING [ft^3]	METER TEMP [oF] (1) inlet	METER TEMP [oF] (2) outlet	STACK TEMP [°F] (1)	PROBE TEMP [°F] (2)	FILTER BOX [°F] (3)	LAST IMP TEMP [°F] (4)	METER EXHAUST O_2 [% vol]	METER EXHAUST CO_2 [% vol]
	1345	0					936.10								
-1	1355	10		1.15	1.90	2.0	943.72	82	83	130	248	252	58	6.6	
	14.05	20		1.15	1.90	2.0	950.32	86	84	130	253	252	52	6.7	
	14:15	30		1.15	1.90	2.0	957.41	89	85	130	253	252	53	6.6	
	14:25	40		1.15	1.90	2.0	964.52	90	86	130	249	252	52	6.5	
10-1	14:35	50		1.15	1.90	3.0	971.70	90	86	130	252	252	53	6.6	
	14.45	60		1.20	1.95	3.0	978.89	91	86	130	249	252	54	6.7	
33"	14:55	70		1.15	1.90	3.0	986.14	92	87	130	252	252	54	6.7	
10-1	15:05	80		1.15	1.90	3.0	993.33	92	87	130	252	252	55	6.6	
	15:15	90		1.10	1.80	3.0	000.46	93	87	130	250	252	57	6.6	
	15:25	100		1.10	1.80	3.0	008.23	92	87	130	250	252	57	6.6	
	15:35	110		1.10	1.80	3.0	014.63	93	87	130	250	252	51	6.7	
	15:45	120		1.10	1.80	3.0	021.69	93	88	130	253	252	50	6.7	
				RHS											
AVERAGE		120		1.137	1.87		85.59	88.2		130				6.6	

10 min purge

Sample Train Leak Checks: Pre Test <0.01 ft^3 @ 9 in. Hg; Post Test <0.01 ft^3 @ 10 in. Hg

Pitot Tube Leak Checks: PreTest OK @ 5 in. H_2O; Post Test OK @ 6 in. H_2O

CONSOLENERGY

NOTE: Purge for 10 minutes at end of sampling.

ONTARIO HYDRO Hg SAMPLING AND SPECIATION FIELD DATA SHEET

TEST ID	SCRI- 2	METER BOX	N-9	CAL. DATA: delta H	1.932	Comments:	Single Port, Single Point, 10 minute readings
PLANT	Plant 10	PITOT TUBE DESC	E-4	Y	0.966		
LOCATION	SCR Inlet	PROBE LENGTH [ft]	8	C(p)	0.8346		
DATE	09/01/04	NOZZLE ID [inch]	1/4" E 0.248	FILTER BOX SETTING	325		
OPERATOR(S)	JEL/NK	%H_2O (Assumed)	8	PROBE HTR SETTING	325		
AMBIENT TEMP [°F]	96	FILTER ID	2	DUCT X-SECTION	circ ? / rect ? / other:		
BAR. PRESS. [" Hg]	29.56	K FACTOR	1.80	DUCT DIMENSIONS		DUCT AREA	

TRAVERSE POINT [port-inch]	CLOCK TIME (24-hr)	SAMPLE TIME [minute]	STATIC PRES [" H_2O]	PITOT HEAD [" H_2O]	METER DIFF PRESSURE [" H_2O]	METER VACUUM [" Hg]	METER READING [ft^3]	METER TEMP [oF] inlet	METER TEMP [oF] outlet	STACK TEMP [°F]	PROBE TEMP [°F]	FILTER BOX [°F]	LAST IMP TEMP [°F]	METER EXHAUST O_2 [% vol]	METER EXHAUST CO_2 [% vol]
	0930	0					111.11								
B- -1	0940	10	-8.08	0.29	0.55	4.6	—	96	95	641	324	NA	62	4.0	
	0950	20		0.29	0.55	4.5	119.062	97	95	642	324		62		
	1000	30		0.29	0.55	6	123.89	103	98	640	321		56	4.1	
	1010	40	-8.00	0.29	0.55	6.5	128.21	104	99	640	321		56		
	1020	50		0.29	0.55	8	132.45	103	99	641	321		56	4.0	
	1030	60	-8.13	0.29	0.55	9	136.73	102	99	642	321		57		
	1040	70		0.29	0.55	10	140.96	102	99	642	321		57	4.0	
	1050	80		0.29	0.55	10	—	101	99	642	325		58		
	1100	90	-7.89	0.29	0.55	12	149.67	101	99	642	325		60	4.1	
	1110	100		0.29	0.55	13	153.48	101	98	642	324		61		
	1120	110	-7.95	0.29	0.55	15.0	157.65	102	99	643	324		61	4.2	
	1130	120		0.29	0.55	16.0	161.70	104	100	640	325		60		
				KLS											
AVERAGE			-8.02	0.29	0.55		50.59	99.8		641.4				4.1	

Sample Train Pre Test 0.000 ft^3 @ 20 in. Hg
Leak Checks: Post Test 0.000 ft^3 @ 16 in. Hg

Pitot Tube PreTest OK @ 7 in. H_2O
Leak Checks: Post Test OK @ 7 in. H_2O

CONSOLENERGY

NOTE: Purge for 10 minutes at end of sampling.

ONTARIO HYDRO Hg SAMPLING AND SPECIATION FIELD DATA SHEET

TEST ID	SCRO- TW2
PLANT	Plant 10
LOCATION	SCR outlet
DATE	9/1/04
OPERATOR(S)	JAW VBC
AMBIENT TEMP [°F]	110
BAR. PRESS. [" Hg]	29.56

METER BOX	N-3
PITOT TUBE DESC	B-15
PROBE LENGTH [ft]	8
NOZZLE ID [inch]	3/16 E 0.183
%H_2O (Assumed)	9
FILTER ID	9
K FACTOR	~~0.53~~ 0.53

CAL. DATA: delta H	1.916
Y	1.038
C(p)	0.838
FILTER BOX SETTING	NA
PROBE HTR SETTING	325
DUCT X-SECTION	circ ? / rect ? / other:
DUCT DIMENSIONS	DUCT AREA

Comments: Four Ports, single point, 10 minute readings
Note: for 2.5 min, pulled air (1.6cf) through impingers at start of test

TRAVERSE POINT [port-inch]	CLOCK TIME (24-hr)	SAMPLE TIME [minute]	STATIC PRES [" H_2O]	PITOT HEAD [" H_2O]	METER DIFF PRESSURE [" H_2O]	METER VACUUM [" Hg]	METER READING 168.75 ~~170.70~~	METER TEMP [oF] inlet (107)	METER TEMP [oF] outlet	STACK TEMP [°F] (675)	PROBE TEMP [°F]	FILTER BOX [°F]	LAST IMP TEMP [°F]	METER EXHAUST 4.6 O_2 [% vol]	METER EXHAUST 15.5 CO_2 [% vol]	O_2 meter calib. check
B-duct	09:~~42~~	0					~~170.70~~									
11 -1	09:52	10		0.75	0.40	4.0	174.03	98	98	675	329	NA	74	4.0	16.0	
	10:02	20	-11.56	0.80	0.42	5.0	177.38	99	98	676	329	NA	70	4.0	16.1	
	10:12	30		0.70	0.37	5.0	180.59	95	98	676	330	NA	64	4.0	16.1	
					leak check dead stop @ -12" Hg											
	10:20						181.25									
5 -1	10:30	40		0.63	0.33	5.0	184.29	100	99	677	336	NA	65	4.0	16.1	
	10:40	50	-11.58	0.63	0.33	5.5	187.34	99	98	677	336	NA	63	3.9	16.2	20.2 Recal
	10:50	60		0.63	0.33	6.0	190.36	100	99	677	330	NA	64	4.1	16.0	
					leak check dead stop @ -12" Hg											
	10:58						191.10									
5 -1	11:08	70		0.67	0.36	6.0	194.29	100	99	675	334	NA	69	4.2	15.9	
	11:18	80	-11.56	0.65	0.34	7.0	197.36	101	100	675	336	NA	63	4.0	16.1	20.8 OK
	11:28	90		0.63	0.33	8.0	200.40	101	100	675	336	NA	69	4.0	16.1	
					leak check dead stop @ -13" Hg											
	11:34						200.90									
2 -1	11:44	100		0.74	0.39	9.0	204.33	101	101	668	332	NA	68	4.0	16.1	
	11:54	110	-11.62	0.74	0.39	9.5	207.45	102	101	669	337	NA	65	4.2	15.9	
	12:04	120		0.74	0.39	10.0	210.76	102	101	668	333	NA	65	4.2	15.9	
				(RMS)												
AVERAGE			-11.58	0.691	0.365		38.16		99.6	674.0				4.05	16.05	

Sample Train Pre Test dead stop ft³ @ -12 in. Hg
Leak Checks: Post Test dead stop ft³ @ -13 in. Hg

Pitot Tube PreTest OK @ -8 in. H_2O
Leak Checks: Post Test _____ @ _____ in. H_2O

NOTE: Purge for 10 minutes at end of sampling.

CONSOL ENERGY.

Post test air purge for 10 min @ ΔH ≈ 0.5

ONTARIO HYDRO Hg SAMPLING AND SPECIATION FIELD DATA SHEET

TEST ID	AHO-2	METER BOX	N-2	CAL. DATA: delta H	1.956
PLANT	Plant 10	PITOT TUBE DESC	E-3	Y	0.976
LOCATION	Air Heater Outlet	PROBE LENGTH [ft]	8	C(p)	
DATE	9/1/04	NOZZLE ID [inch]	3/16A -0.189	FILTER BOX SETTING	
OPERATOR(S)	GC/BPS	%H_2O (Assumed)		PROBE HTR SETTING	325
AMBIENT TEMP [°F]	80	FILTER ID	12	DUCT X-SECTION	circ ? / rect ? / other:
BAR. PRESS. [" Hg]	29.56	K FACTOR	0.867	DUCT DIMENSIONS / DUCT AREA	

Comments: Three ports, ~~two~~ ONE points each, 40 minute readings

TRAVERSE POINT [port-inch]	CLOCK TIME (24-hr)	SAMPLE TIME [minute]	STATIC PRES [" H_2O]	PITOT HEAD [" H_2O]	METER DIFF PRESSURE [" H_2O]	METER VACUUM [" Hg]	METER READING [ft^3]	METER TEMP [oF] (6) inlet	(7) outlet	(1) STACK TEMP [°F]	(2) PROBE TEMP [°F]	FILTER BOX [°F]	(4) LAST IMP TEMP [°F]	METER EXHAUST O_2 [% vol]	CO_2 [% vol]
B-duct	0930	0					652.20								
-90		10		0.51	0.44	4.0	655.92	90	88	366	183		64	4.5	15.6
B-10 -90		20	-21.83	0.51	0.44	4.5	659.64	91	89	366	186		61	4.5	15.6
@ 57" -90		30		0.51	0.44	5.0	663.34	92	90	366	186		61	4.4	15.7
-30		40		0.51	0.44	5.5	667.07	92	90	367	187		63	4.5	15.6
			LEAK CHECK OK, RESTART @												
	1016						667.42								
-90		50		0.56	0.48	4.5	671.36	94	91	360	189		66	4.5	15.6
B-6 -90		60	-21.93	0.56	0.48	5.0	675.23	95	93	360	191		62	4.6	15.5
-90		70		0.56	0.48	6.0	679.10	96	93	361	192		61	4.5	15.6
@ 57" -90		80		0.56	0.48	7.0	683.03	96	93	360	192		61	4.8	15.3
			LEAK CHECK OK, RESTART @												
	1100						683.36								
-90		90		0.66	0.58	5.5	687.64	96	94	345	188		62	4.4	15.7
B-3 -90		100	-22.05	0.66	0.58	7.5	691.85	98	95	345	190		59	4.4	15.7
-90		110		0.66	0.58	9.0	696.06	98	95	344	191		59	4.6	15.5
@ 57" -90	1140	120		0.66	0.58	11.5	700.33	97	95	344	191		59	4.6	15.5
				RIGS											
AVERAGE			-21.94	0.575	0.50		47.45	43.4		357				4.5	15.6

Sample Train Leak Checks: Pre Test 0.008 ft^3 @ 10 in. Hg; Post Test 0 ft^3 @ 12 in. Hg

Pitot Tube Leak Checks: PreTest 0 @ 5 in. H_2O; Post Test ____ @ ____ in. H_2O

CONSOLENERGY

NOTE: Purge for 10 minutes at end of sampling.

ONTARIO HYDRO Hg SAMPLING AND SPECIATION FIELD DATA SHEET (Test 2)

Page ____ of ____

TEST ID	STK- 2
PLANT	Plant 10
LOCATION	Stack
DATE	9/1/04
OPERATOR(S)	KRC, RVO
AMBIENT TEMP [°F]	
BAR. PRESS. [" Hg]	29.56

METER BOX	5
PITOT TUBE DESC	
PROBE LENGTH [ft]	10
NOZZLE ID [inch]	
%H_2O (Assumed)	
FILTER ID	2
K FACTOR	1.65

CAL. DATA: delta H			
Y			
C(p)			
FILTER BOX SETTING			
PROBE HTR SETTING			
DUCT X-SECTION	circ ?	rect ?	other:
DUCT DIMENSIONS	42'	DUCT AREA	1385.18 ft^2

Comments: Single Port, Single Point, 10 minute readings
sample nozzle rotated 90° cut into flow
29.56

TRAVERSE POINT [port-inch]	CLOCK TIME (24-hr)	SAMPLE TIME [minute]	STATIC PRES [" H_2O]	PITOT HEAD [" H_2O]	METER DIFF PRESSURE [" H_2O]	METER VACUUM [" Hg]	METER READING [ft^3]	METER TEMP (6) [oF] inlet	METER TEMP (7) [oF] outlet	STACK TEMP (1) [°F]	PROBE TEMP (2) [°F]	FILTER BOX (3) [°F]	LAST IMP TEMP (4) [°F]	METER EXHAUST O_2 [% vol]	METER EXHAUST CO_2 [% vol]
	9:30	0					28.00								
-1	9:40	10		1.10	1.80	3.0	35.00	72	74	130	252	256	57	6.2	
	9:50	20		1.10	1.80	3.0	41.20	74	74	130	252	254	51	6.2	
101	10:00	30		1.10	1.80	3.0	48.77	75	75	130	252	254	51	6.2	
-3	10:10	40	See	1.10	1.80	3.0	55.60	76	75	130	252	254	57	6.3	
3	10:20	50		1.10	1.80	3.0	62.42	76	75	130	250	252	51	6.2	
Port	10:30	60	Pitot	1.10	1.80	3.0	69.22	77	75	130	250	253	52	6.1	
Port	10:40	70	old	1.10	1.80	3.0	75.96	78	77	130	249	254	53	6.2	
7	10:50	80	data	1.10	1.80	3.0	82.68	79	77	130	246	253	55	6.3	
	11:00	90		1.10	1.80	3.0	89.38	80	78	130	250	252	56	6.2	
252	11:10	100		1.10	1.80	3.0	96.02	81	79	130	248	251	57	6.3	
Port	11:20	110		1.10	1.80	3.0	102.79	81	79	130	249	252	54	6.0	
	11:30	120		1.10	1.80	3.0	109.28	81	79	130	248	253	56	6.1	
AVERAGE		120		1.10	1.80	~~3.0~~	81.28	80.0		130				6.2	

10 min purge after test

Sample Train Leak Checks: Pre Test <0.01 ft^3 @ 9 in. Hg; Post Test <0.01 ft^3 @ 9 in. Hg

Pitot Tube Leak Checks: PreTest OK @ 5 in. H_2O; Post Test OK @ 6 in. H_2O

NOTE: Purge for 10 minutes at end of sampling.

CONSOL ENERGY

ONTARIO HYDRO Hg SAMPLING AND SPECIATION FIELD DATA SHEET

Page ____ of ____

TEST ID	SCRI- 3	METER BOX	N-4	CAL. DATA: delta H	1.932	Comments: Single Port, Single Point, 10 minute readings	
PLANT	Plant 10	PITOT TUBE DESC	E-4	Y	0.965		
LOCATION	SCR Inlet	PROBE LENGTH [ft]	8	C(p)	0.826		
DATE	09/01/04	NOZZLE ID [inch]	1/2" E 0.248	FILTER BOX SETTING	~~325~~		
OPERATOR(S)	JEL/DJK	%H_2O (Assumed)	8	PROBE HTR SETTING	325		
AMBIENT TEMP [°F]	108	FILTER ID	3	DUCT X-SECTION	circ ?	rect ?	other:
BAR. PRESS. [" Hg]	29.55	K FACTOR	1.98	DUCT DIMENSIONS		DUCT AREA	

TRAVERSE POINT [port-inch]	CLOCK TIME (24-hr)	SAMPLE TIME [minute]	STATIC PRES [" H_2O]	PITOT HEAD [" H_2O]	METER DIFF PRESSURE [" H_2O]	METER VACUUM [" Hg]	METER READING [ft^3]	METER TEMP [oF] inlet	METER TEMP [oF] outlet	STACK TEMP [°F]	PROBE TEMP [°F]	FILTER BOX [°F]	LAST IMP TEMP [°F]	METER EXHAUST O_2 [% vol]	METER EXHAUST CO_2 [% vol]
	1330	0					167.335								
B- -1	1340	10	7.89	0.29	0.55	5	171.81	110	109	639	320		62		
	1350	20		0.29	0.55	5	176.14	110	108	639	321		61	4.1	
	1400	30		0.29	0.55	6	180.41	112	109	639	320		60		
	1410	40	-7.85	0.27	0.51	7	184.56	111	110	639	324		61	4.1	
	1420	50		0.27	0.51	8	189.67	111	109	640	326		64		
	1430	60	-7.84	0.27	0.51	9	192.82	111	109	639	324		59	4.2	
	1440	70		0.27	0.51	10	196.97	111	109	639	324		56		
	1450	80	-8.23	0.27	0.51	11.5	201.13	111	110	638	325		58	4.0	
	1500	90		0.27	0.51	15	205.26	111	110	639	321		60		
	1510	100	-7.92	0.27	0.51	16	209.46	112	110	639	319		60	4.1	
	1520	110		0.27	0.51	18	213.53	111	109	639	321		62		
		120													
				RMS											
AVERAGE		110	-7.95	0.275	0.521		46.195	101.0		639				4.1	

Sample Train Pre Test 0.000 ft^3 @ 10 in. Hg
Leak Checks: Post Test _____ ft^3 @ _____ in. Hg

Pitot Tube PreTest OK @ 7 in. H_2O
Leak Checks: Post Test _____ @ _____ in. H_2O

CONSOLENERGY

NOTE: Purge for 10 minutes at end of sampling.

ONTARIO HYDRO Hg SAMPLING AND SPECIATION FIELD DATA SHEET

Page _____ of _____

TEST ID	SCRO- THASE
PLANT	Plant 10
LOCATION	SCR outlet
DATE	9/1/04
OPERATOR(S)	JAW VBC
AMBIENT TEMP [°F]	117
BAR. PRESS. [" Hg]	29.55

METER BOX	N-3
PITOT TUBE DESC	E-15
PROBE LENGTH [ft]	8
NOZZLE ID [inch]	3/16 0.183
%H_2O (Assumed)	9
FILTER ID	7
K FACTOR	0.53

CAL. DATA: delta H	1.916
Y	1.038
C(p)	0.838
FILTER BOX SETTING	NA
PROBE HTR SETTING	325
DUCT X-SECTION	circ ? rect ? other:
DUCT DIMENSIONS	DUCT AREA

Comments: Four Ports, single point, 10 minute readings

TRAVERSE POINT [port-inch]	CLOCK TIME (24-hr)	SAMPLE TIME [minute]	STATIC PRES [" H_2O]	PITOT HEAD [" H_2O]	METER DIFF PRESSURE [" H_2O]	METER VACUUM [" Hg]	METER READING [ft^3]	METER TEMP [oF] inlet	METER TEMP [oF] outlet	STACK TEMP [°F]	PROBE TEMP [°F]	FILTER BOX [°F]	LAST IMP TEMP [°F]	METER EXHAUST O_2 [% vol]	METER EXHAUST CO_2 [% vol]	O_2 meter calib. check
							215.60									
E-duct	13:30	0					215.60									
2 -1	13:40	10		0.72	0.38	5.0	218.93	98	98	669	330	NA	59	4.1	15.9	
	13:50	20	-11.68	0.72	0.38	5.0	222.22	98	98	669	337	NA	55	4.0	16.0	20.9 OK
	14:00	30		0.79	0.42	6.0	225.60	98	97	668	337	NA	55	4.1	15.9	
				leak check - dead stop @ -12" Hg												
	14:06						226.06									
5 -1	14:16	40		0.69	0.37	7.0	229.30	98	98	676	336	NA	59	4.0	16.0	
	14:26	50	-11.52	0.68	0.36	8.0	232.47	98	98	676	330	NA	59	3.9	16.1	20.8 OK
		60		0.67	0.36	8.5	235.63	99	98	677	328	NA	60	3.9	16.1	
				leak check - dead stop @ -12" Hg												
	14:48						236.50									
8 -1	14:58	70		0.67	0.36	8.0	239.70	99	99	678	334	NA	61	4.0	16.0	
	15:08	80	-11.59	0.66	0.35	9.0	242.85	99	99	678	328	NA	60	4.1	15.9	20.9 OK
	15:18	90		0.67	0.36	10.0	246.05	101	99	679	333	NA	61	3.9	16.1	
				leak check - dead stop @ -14" Hg												
	15:26						247.50									
11 -1	15:36	100		0.76	0.40	5.5	250.88	102	101	677	330	NA	62	4.1	15.9	
	15:46	110	-11.70	0.76	0.40	6.0	254.25	101	100	677	333	NA	59	4.0	16.0	20.9 OK
	15:56	120		0.76	0.40	7.0	257.60	101	100	677	331	NA	58	4.0	16.0	
AVERAGE			-11.62	0.712	0.378		39.22		99.0	675.1				4.01	15.99	

Sample Train Leak Checks: Pre Test dead stop ft^3 @ -12 in. Hg; Post Test dead stop ft^3 @ -12 in. Hg

Pitot Tube Leak Checks: PreTest OK @ -8 in. H_2O; Post Test _____ @ _____ in. H_2O

NOTE: Purge for 10 minutes at end of sampling.

CONSOLENERGY

Post-test air purge for 10 min @ SH= 0.4

ONTARIO HYDRO Hg SAMPLING AND SPECIATION FIELD DATA SHEET

Page _____ of _____

TEST ID	AHO- 3	METER BOX	N-2	CAL. DATA: delta H	1.956	Comments: Three ports, ~~two~~ one points each, 40 minute readings	
PLANT	Plant 10	PITOT TUBE DESC	E-3	Y	0.970		
LOCATION	Air Heater Outlet	PROBE LENGTH [ft]	8.6	C(p)			
DATE	9/1/04	NOZZLE ID [inch]	3/16A - 0.189"	FILTER BOX SETTING	325		
OPERATOR(S)	GLC/BPS	%H_2O (Assumed)		PROBE HTR SETTING			
AMBIENT TEMP [°F]	85	FILTER ID	13	DUCT X-SECTION	circ ?	rect ?	other:
BAR. PRESS. [" Hg]	29.55	K FACTOR	0.867	DUCT DIMENSIONS		DUCT AREA	

TRAVERSE POINT [port-inch]	CLOCK TIME (24-hr)	SAMPLE TIME [minute]	STATIC PRES [" H_2O]	PITOT HEAD [" H_2O]	METER DIFF PRESSURE [" H_2O]	METER VACUUM [" Hg]	METER READING [ft^3]	METER TEMP [oF] (6) inlet	METER TEMP [oF] (7) outlet	STACK (1) TEMP [°F]	PROBE (2) TEMP [°F]	FILTER BOX [°F]	LAST IMP (4) TEMP [°F]	METER EXHAUST O_2 [% vol]	METER EXHAUST CO_2 [% vol]
B-duct	1330	0					705.30								
-90		10		0.64	0.56	4.0	709.52	99	98	345	184		60	4.0	12.6
B-3 -90		20	-22.01	0.63	0.55	5.0	713.72	99	98	344	183		58	4.0	12.6
-30		30		0.63	0.55	5.5	717.84	100	98	344	184		60	4.1	12.6
@57" -30		40		0.63	0.55	6.5	722.01	100	98	344	184		62	4.1	12.6
				LEAK	CHECK OK, RESTARTED @										
	1414						722.26								
-90		50		0.59	0.51	4.5	726.28	100	98	361	192		54	4.0	12.6
B-6 -90		60	-21.87	0.57	0.50	5.0	730.29	100	98	360	195		53	4.0	12.6
-30		70		0.57	0.50	6.0	734.30	101	98	360	196		53	4.4	12.3
@57" -30		80		0.57	0.50	7.0	738.29	100	98	360	196		54	4.1	12.6
				LEAK	CHECK OK, RESTART @										
	1458						738.63								
-90		90		0.50	0.44	5.0	742.43	101	98	365	195		58	4.1	12.6
B-10 -90		100	-21.83	0.50	0.44	6.0	746.22	101	99	365	196		58	4.2	12.5
-30		110		0.50	0.44	7.0	749.98	102	99	365	196		58	4.2	12.5
@57" -30		120		0.50	0.44	7.5	753.76	101	99	365	196		58	4.2	12.5
AVERAGE			-21.90	0.568	0.498		47.87	99.3		356.5				4.1	12.6

Sample Train Leak Checks: Pre Test 0 ft^3 @ 10 in. Hg; Post Test 0 ft^3 @ 10 in. Hg

Pitot Tube Leak Checks: PreTest 0 @ 5 in. H_2O; Post Test _____ @ _____ in. H_2O

CONSOLENERGY

✓ NOTE: Purge for 10 minutes at end of sampling.

ONTARIO HYDRO Hg SAMPLING AND SPECIATION FIELD DATA SHEET Test 3

Page ____ of ____

TEST ID	STK- 3
PLANT	Plant 10
LOCATION	Stack
DATE	9-1-04
OPERATOR(S)	KRC, RLO
AMBIENT TEMP [°F]	
BAR. PRESS. [" Hg]	29.55

METER BOX	5
PITOT TUBE DESC	E-11A
PROBE LENGTH [ft]	10
NOZZLE ID [inch]	
%H_2O (Assumed)	
FILTER ID	3
K FACTOR	1.65

CAL. DATA: delta H	
Y	
C(p)	
FILTER BOX SETTING	
PROBE HTR SETTING	
DUCT X-SECTION	circ ? / rect ? / other:
DUCT DIMENSIONS	42'
DUCT AREA	1385.48 ft²

Comments: Single Port, Single Point, 10 minute readings
← nozzle rotated ~90° into flow

TRAVERSE POINT [port-inch]	CLOCK TIME (24-hr)	SAMPLE TIME [minute]	STATIC PRES [" H_2O]	PITOT HEAD [" H_2O]	METER DIFF PRESSURE [" H_2O]	METER VACUUM [" Hg]	METER READING [ft³]	METER TEMP [oF] (6) inlet	METER TEMP [oF] (7) outlet	STACK TEMP [°F] (1)	PROBE TEMP [°F] (2)	FILTER BOX [°F] (3)	LAST IMP TEMP [°F] (4)	METER EXHAUST O_2 [% vol]	METER EXHAUST CO_2 [% vol]
	1330	0					115.00								
-1	1340	10		1.10	1.80	2.5	122.01	80	81	130	246	255	61	6.2	
	13:50	20		1.10	1.80	2.5	128.81	84	83	130	253	254	55	6.2	
E	14:00	30		1.10	1.80	2.5	135.70	85	83	130	250	253	53	6.2	
Port	14:10	40	See	1.10	1.80	2.5	142.54	84	81	130	250	253	53	6.3	
Port	14:20	50	Pitot	1.10	1.80	2.5	149.43	84	81	130	250	253	54	6.3	
	14:30	60		1.10	1.80	3.0	156.30	84	81	130	252	252	57	6.2	
70	14:40	70	data	1.10	1.80	3.0	163.18	85	81	130	253	254	57	6.3	
12 33"	14:50	80		1.10	1.80	3.0	170.02	86	82	130	252	253	52	6.1	
	15:00	90		1.10	1.80	3.0	177.00	85	81	130	250	252	48	6.2	
	15:10	100		1.10	1.80	3.0	183.70	85	81	130	250	252	48	6.2	
	15:20	110		1.10	1.80	3.0	190.53	86	83	130	250	253	49	6.2	
	15:30	120		1.10	1.80	3.0	197.37	86	83	130	250	252	51	6.2	
AVERAGE		120		1.10	1.80		82.37	83.1		130				6.2	

10 min purge after test

Sample Train Leak Checks: Pre Test <0.01 ft³ @ 9 in. Hg; Post Test <0.01 ft³ @ 9 in. Hg

Pitot Tube Leak Checks: PreTest OK @ 2 in. H_2O; Post Test OK @ 2 in. H_2O

NOTE: Purge for 10 minutes at end of sampling.

CONSOLENERGY

ONTARIO HYDRO Hg SAMPLING AND SPECIATION FIELD DATA SHEET

Page _____ of _____

TEST ID	SCRI- 4	METER BOX	N-4	CAL. DATA: delta H	1.932
PLANT	Plant 10	PITOT TUBE DESC		Y	0.956
LOCATION	SCR Inlet	PROBE LENGTH [ft]	8	C(p)	
DATE	09/02/04	NOZZLE ID [inch]		FILTER BOX SETTING	N/A
OPERATOR(S)	JEL/DJK	%H_2O (Assumed)		PROBE HTR SETTING	325
AMBIENT TEMP [°F]	95	FILTER ID	5	DUCT X-SECTION	circ ? / rect ? / other:
BAR. PRESS. [" Hg]		K FACTOR	1.90	DUCT DIMENSIONS / DUCT AREA	

Comments: Single Port, Single Point, 10 minute readings

TRAVERSE POINT [port-inch]	CLOCK TIME (24-hr)	SAMPLE TIME [minute]	STATIC PRES [" H_2O]	PITOT HEAD [" H_2O]	METER DIFF PRESSURE [" H_2O]	METER VACUUM [" Hg]	METER READING [ft^3]	METER TEMP [oF] inlet	METER TEMP [oF] outlet	STACK TEMP [°F]	PROBE TEMP [°F]	FILTER BOX [°F]	LAST IMP TEMP [°F]	METER EXHAUST O_2 [% vol]	METER EXHAUST CO_2 [% vol]
	0930	0					224.35								
B- -1	0940	10	-7.91	0.30	0.56	4.5	228.68	96	94	637	321		65		
	0950	20		0.30	0.56	5	232.99	97	95	635	322		62	4.0	
	1000	30	-7.63	0.30	0.56	6	237.27	99	96	637	321		62		
	1010	40		0.30	0.56	7	241.57	100	97	637	321		60	4.2	
	1020	50	-7.96	0.30	0.56	8	245.86	101	98	636	321		60		
	1030	60		0.30	0.56	9	250.18	101	98	637	321		58	4.0	
	1040	70	-7.93	0.30	0.56	10	254.48	103	99	636	322		57		
	1050	80		0.30	0.56	11.5	258.79	105	101	636	321		56	4.0	
	1100	90	-7.88	0.30	0.56	13	263.10	106	102	636	322		57		
	1110	100		0.30	0.56	15.5	267.44	107	103	637	321		57	4.2	
	1120	110		0.30	0.56	16.5	271.73	108	105	636	321		60		
1127	~~1130~~	120		0.30	0.56	20	274.25	108	105	637	322		61		
AVERAGE			-7.86	0.30	0.56		49.9		101.0	636.4				4.08	

Sample Train Pre Test _____ ft^3 @ _____ in. Hg
Leak Checks: Post Test _____ ft^3 @ _____ in. Hg

Pitot Tube PreTest _____ @ _____ in. H_2O
Leak Checks: Post Test _____ @ _____ in. H_2O

CONSOLENERGY

NOTE: Purge for 10 minutes at end of sampling.

ONTARIO HYDRO Hg SAMPLING AND SPECIATION FIELD DATA SHEET

Page _____ of _____

TEST ID	SCRO- FOUR	METER BOX	N-3	CAL. DATA: delta H	1.916	Comments: Four Ports, single point, 10 minute readings	
PLANT	Plant 10	PITOT TUBE DESC	E-15	Y	1.038		
LOCATION	SCR outlet	PROBE LENGTH [ft]	8	C(p)	0.838		
DATE	9/2/04	NOZZLE ID [inch]	3/16 E 0.183	FILTER BOX SETTING	NA		
OPERATOR(S)	JAW UBC	%H_2O (Assumed)	9	PROBE HTR SETTING	325		
AMBIENT TEMP [°F]	96	FILTER ID	7	DUCT X-SECTION	circ ?	rect ?	other:
BAR. PRESS. [" Hg]	29.50	K FACTOR	0.58	DUCT DIMENSIONS		DUCT AREA	

TRAVERSE POINT [port-inch]	CLOCK TIME (24-hr)	SAMPLE TIME [minute]	STATIC PRES [" H_2O]	PITOT HEAD [" H_2O]	METER DIFF PRESSURE [" H_2O]	METER VACUUM [" Hg]	METER READING [ft³]	METER TEMP [oF] inlet	METER TEMP [oF] outlet	STACK TEMP [°F]	PROBE TEMP [°F]	FILTER BOX [°F]	LAST IMP TEMP [°F]	METER EXHAUST 4 O_2 [% vol]	METER EXHAUST 16 CO_2 [% vol]	
							262.53	100		675						
B-duct	09:30	0					262.87									O_2 meter calib. check
11 -1	09:40	10		0.82	0.42	6.0	266.32	97	98	671	327	NA	52	4.0	16.0	
	09:50	20	-11.40	0.83	0.42	6.5	269.72	96	97	672	330	NA	52	4.0	16.0	20.8 OK
	10:00	30		0.88	0.44	7.0	273.22	95	96	674	329	NA	53	4.3	15.8	
				leak check - dead stop @ -12" Hg												
	10:07						274.00									
8 -1	10:17	40	-11.53	0.68	0.34	7.5	277.34	95	95	675	335	NA	57	4.1	16.0	
	10:27	50		0.68	0.34	8.5	280.44	95	95	675	336	NA	58	4.2	15.9	
	10:37	60		0.66	0.33	9.0	283.47	96	95	675	337	NA	59	4.0	16.1	20.5 recal
				leak check - dead stop @ -14" Hg												
	10:43						284.20									
5 -1	10:53	70		0.66	0.33	9.0	287.24	98	97	675	334	NA	61	4.1	16.0	
	11:03	80	-11.73	0.64	0.32	9.5	290.31	99	98	675	336	NA	55	3.9	16.2	20.7 recal
	11:13	90		0.64	0.32	10.0	293.38	99	98	675	334	NA	54	4.2	15.9	
				leak check - dead stop @ -14" Hg												
	11:20						294.25									
2 -1	11:30	100		0.74	0.37	12.0	297.54	99	98	667	332	NA	56	4.2	15.9	
	11:40	110	-11.49	0.72	0.36	13.0	300.75	100	99	668	328	NA	57	4.3	15.8	20.8 OK
	11:50	120		0.74	0.37	14.0	303.99	101	99	668	330	NA	58	4.4	15.7	
				AVG												
AVERAGE			-11.54	0.722	0.363		38.64		97.3	672.5				4.14	15.96	

Sample Train Leak Checks: Pre Test dead stop ft³ @ -15 in. Hg; Post Test dead stop ft³ @ -15 in. Hg

Pitot Tube Leak Checks: PreTest OK @ -8 in. H_2O; Post Test _____ @ _____ in. H_2O

CONSOLENERGY

NOTE: Purge for 10 minutes at end of sampling.

Post-test air purge for 10 min @ ΔH = 0.4

ONTARIO HYDRO Hg SAMPLING AND SPECIATION FIELD DATA SHEET

Page ____ of ____

TEST ID	AHO- 4	METER BOX	N-2	CAL DATA: delta H	1.956	Comments: Three ports, ~~two~~ ONE points each, 40 minute readings.	
PLANT	Plant 10	PITOT TUBE DESC	E-3	Y	0.996		
LOCATION	Air Heater Outlet	PROBE LENGTH [ft]	8 6	C(p)			
DATE	9/2/04	NOZZLE ID [inch]	3/16A - 0.189"	FILTER BOX SETTING	325		
OPERATOR(S)	GC/BPS	%H_2O (Assumed)		PROBE HTR SETTING			
AMBIENT TEMP [°F]	100	FILTER ID	14	DUCT X-SECTION	circ ?	rect ?	other:
BAR. PRESS. [" Hg]	29.50	K FACTOR	0.867	DUCT DIMENSIONS		DUCT AREA	

TRAVERSE POINT [port-inch]	CLOCK TIME (24-hr)	SAMPLE TIME [minute]	STATIC PRES [" H_2O]	PITOT HEAD [" H_2O]	METER DIFF PRESSURE [" H_2O]	METER VACUUM [" Hg]	METER READING [ft^3]	METER TEMP [oF] (6) inlet	METER TEMP [oF] (7) outlet	STACK (1) TEMP [°F]	PROBE (2) TEMP [°F]	FILTER BOX [°F]	LAST IMP (4) TEMP [°F]	METER EXHAUST O_2 [% vol]	METER EXHAUST CO_2 [% vol]
B-duct	0930	0					758.40								
~~A0~~		10		0.52	0.45	4.0	762.22	99	100	367	198		67	4.1	12.6
B-10 ~~B0~~		20	-22.29	0.52	0.45	4.5	765.97	98	100	369	200		62	4.2	12.5
@57" ~~C0~~		30		0.52	0.45	5.0	769.72	97	97	369	199		62	4.4	12.3
~~D0~~		40		0.52	0.45	6.0	773.46	97	96	368	200		63	4.3	12.4
				LEAK CHECK OK, RESTART @											
	1015	~~45~~					773.73								
~~A0~~		50		0.58	0.51	4.5	777.73	97	96	361	196		64	4.6	12.2
B-6 ~~B0~~		60	-22.45	0.58	0.51	5.0	781.71	97	96	362	198		62	4.5	12.3
@57" ~~C0~~		70		0.58	0.51	6.0	785.66	97	95	361	199		61	4.4	12.3
~~D0~~		80		0.58	0.51	6.5	789.70	97	95	361	201		63	4.2	12.5
				LEAK CHECK OK, RESTART @											
	1100						790.00								
~~A0~~		90		0.63	0.56	5.0	794.16	98	96	345	194		61	4.2	12.5
B-3 ~~B0~~		100	-22.82	0.63	0.56	6.0	798.32	99	96	345	195		59	4.2	12.5
@57" ~~C0~~		110		0.63	0.56	7.5	802.49	99	96	345	195		59	4.2	12.5
~~D0~~		120		0.63	0.56	8.5	806.60	99	97	346	195		60	4.3	12.4
AVERAGE			-22.52	0.576	0.506		47.63		97.3	358.3				4.3	15.8

Sample Train Leak Checks: Pre Test 0 ft^3 @ 10 in. Hg; Post Test 0 ft^3 @ 10 in. Hg

Pitot Tube Leak Checks: PreTest 0 @ 5 in. H_2O; Post Test ____ @ ____ in. H_2O

CONSOLENERGY

NOTE: Purge for 10 minutes at end of sampling.

ONTARIO HYDRO Hg SAMPLING AND SPECIATION FIELD DATA SHEET

Page _____ of _____

TEST ID	STK- H	METER BOX	5	CAL. DATA: delta H	2.009
PLANT	Plant 10	PITOT TUBE DESC	E-11A	Y	1.006
LOCATION	Stack	PROBE LENGTH [ft]	10	C(p)	
DATE	9/2/04	NOZZLE ID [inch]		FILTER BOX SETTING	
OPERATOR(S)	KRC, RLO	%H_2O (Assumed)		PROBE HTR SETTING	
AMBIENT TEMP [°F]		FILTER ID	4	DUCT X-SECTION	circ ? / rect ? / other:
BAR. PRESS. [" Hg]	29.50	K FACTOR	1.65	DUCT DIMENSIONS	42'
				DUCT AREA	1385.18 ft^2

Comments: Single Port, Single Point, 10 minute readings
~40° rotation to
sample nozzle into flow

TRAVERSE POINT [port-inch]	CLOCK TIME (24-hr)	SAMPLE TIME [minute]	STATIC PRES [" H_2O]	PITOT HEAD [" H_2O]	METER DIFF PRESSURE [" H_2O]	METER VACUUM [" Hg]	METER READING [ft^3]	METER TEMP [oF] (6) inlet	METER TEMP [oF] (7) outlet	STACK TEMP [°F] (1)	PROBE TEMP [°F] (2)	FILTER BOX [°F] (3)	LAST IMP TEMP [°F] (4)	METER EXHAUST O_2 [% vol]	METER EXHAUST CO_2 [% vol]
	0930	0					207.20								
-1	9:40	10		1.15	1.90	2.5	214.22	76	75	130	246	254	55	6.9	
	9:50	20		1.15	1.90	2.5	221.28	80	78	130	253	253	57	7.1	
	10:00	30	See	1.15	1.90	2.5	228.28	84	81	130	251	252	58	7.0	
Port	10:10	40	Pitot	1.15	1.90	3.0	235.22	86	84	129	249	251	59	6.9	
	10:20	50		1.15	1.90	3.0	242.31	88	86	129	250	251	55	7.0	
	10:30	60		1.15	1.90	3.0	249.58	90	87	129	250	252	54	6.9	
60-	10:40	70		1.15	1.90	3.0	256.62	92	88	129	251	252	54	7.0	
	10:50	80		1.15	1.90	3.0	263.74	92	88	129	250	252	57	6.9	
	11:00	90		1.15	1.90	3.0	270.86	92	88	129	251	252	56	7.0	
Port	11:10	100		1.15	1.90	3.0	277.97	93	89	129	250	252	54	7.1	
	11:20	110		1.15	1.90	3.0	285.20	94	90	129	252	252	54	7.1	
	11:30	120		1.15	1.90	3.0	292.40	95	90	129	250	252	55	7.1	
AVERAGE		120					85.20		86.9	129.3				7.0	

10 min purge after test

Sample Train Leak Checks: Pre Test <0.01 ft^3 @ 9 in. Hg; Post Test <0.01 ft^3 @ 9 in. Hg

Pitot Tube Leak Checks: PreTest OK @ 6 in. H_2O; Post Test OK @ 6 in. H_2O

CONSOL ENERGY

NOTE: Purge for 10 minutes at end of sampling.

Test #1

Axial Flow Check

Location	Stack	Duct Ht, "		Barometric	29.50
Date	8/31/04	Duct ID,"		Static	-1.097
Time	1345-1545	Duct Area	ft^2	Dry Bulb	
Tube I.D.	S-19B	% O_2		Wet Bulb	
C-Factor	~~0.774(A)~~	% CO_2		% H_2O	
Operator(s)	KRC, RLO	% N_2		W.M.Wt	

PORT/ POINT	DISTANCE [" From Wall]	TEMP [°F]	DELTA P [" H_2O]	STATIC [" H_2O]	Null Angle	
NORTH-1			0.949		37	
NORTH-2			1.110		40	-1.060
NORTH-3			1.199		42	
EAST-1			0.735		35	
EAST-2			1.084		40	-1.206
EAST-3			1.176		45	
SOUTH-1		130	0.878		38	-0.973
SOUTH-2		130	0.985		36	
SOUTH-3		—	1.214		36	
WEST-1			0.937		36	
WEST-2		bad	1.094		36	-1.150
WEST-3		TC	1.198		37	
Average		130	1.041 RWS			
Maximum						
Minimum						
SDEV						

DATA SUMMARY	
Velocity, [fps]	
acfm	
scfm	
dscfm	
Ex Air Free cfm	
Est. MM Btu/hr Heat Input	
Est. Firing Rate, lb/hr	

Axial Flow Check

Test 2

Location	Stack	Duct Ht, "		Barometric	29.56
Date	9/1/04	Duct ID,"		Static	
Time	0930-1130	Duct Area	ft²	Dry Bulb	
Tube I.D.	S-19 B	% O_2		Wet Bulb	
C-Factor	~~0.774(A)~~	% CO_2		% H_2O	
Operator(s)	KRC, RLO	% N_2		W.M.Wt	

PORT/ POINT	DISTANCE [" From Wall]	TEMP [°F]	DELTA P [" H_2O]	STATIC [" H_2O]	Null Angle	
NORTH-1			1.027		45	
NORTH-2			1.135	-1.317	45	-1.317
NORTH-3			1.041		40	
EAST-1		130	0.803		35	
EAST-2		130	1.132	-1.322	33	-1.322
EAST-3			1.202		40	
SOUTH-1			0.970		35	
SOUTH-2		See 0-H	0.839	-1.060	35	-1.060
SOUTH-3			1.152		35	
WEST-1			0.924		30	
WEST-2			1.074	-1.229	36	-1.229
WEST-3			1.067		35	
Average		130	1.027	-1.232		
Maximum			2.45			
Minimum						
SDEV						

DATA SUMMARY	
Velocity, [fps]	
acfm	
scfm	
dscfm	
Ex Air Free cfm	
Est. MM Btu/hr Heat Input	
Est. Firing Rate, lb/hr	

Test 3

Axial Flow Check

Location	Stack	Duct Ht, "		Barometric	29.55
Date	9/1/04	Duct ID,"		Static	
Time	1330 - 1530	Duct Area	ft²	Dry Bulb	
Tube I.D.	S-19	% O_2		Wet Bulb	
C-Factor	~~0.771 (A)~~	% CO_2		% H_2O	
Operator(s)	KRC, RLO	% N_2		W.M.Wt	

PORT/ POINT	DISTANCE [" From Wall]	TEMP [°F]	DELTA P [" H_2O]	STATIC [" H_2O]	Null Angle
NORTH-1			0.950		~~39~~ 44
NORTH-2			1.219	-1.328	48
NORTH-3			1.082		38
EAST-1			0.774		35
EAST-2			1.200	-1.516	43
EAST-3			1.209		40
SOUTH-1			0.918		36
SOUTH-2			0.817	-1.040	33
SOUTH-3			1.161		34
WEST-1			0.898		37
WEST-2			1.086	-1.088	35
WEST-3			1.147		36
Average			1.033	-1.009	
Maximum					
Minimum					
SDEV					

0-4 sample port

DATA SUMMARY	
Velocity, [fps]	
acfm	
scfm	
dscfm	
Ex Air Free cfm	
Est. MM Btu/hr Heat Input	
Est. Firing Rate, lb/hr	

Test 4

Axial Flow Check

Location	Stack	Duct Ht, "		Barometric	29.50
Date	9/21/04	Duct ID,"		Static	
Time	0930 - 1130	Duct Area	ft²	Dry Bulb	
Tube I.D.	S-19 B	% O_2		Wet Bulb	
C-Factor	~~0.774 (A)~~	% CO_2		% H_2O	
Operator(s)	KRC, RLO	% N_2		W.M.Wt	

PORT/ POINT	DISTANCE [" From Wall]	TEMP [°F]	DELTA P [" H_2O]	STATIC [" H_2O]	Null Angle
NORTH-1			1.021		40
NORTH-2			1.295	-1.315	43
NORTH-3			1.218		
EAST-1		See	0.825		36
EAST-2		0-4	1.253	-1.484	38
EAST-3			1.306		40
SOUTH-1		dup	1.009		33
SOUTH-2			1.013	-1.167	35
SOUTH-3			1.284		34
WEST-1			0.9711		35
WEST-2			1.161	-1.173	33
WEST-3			1.256		35
Average			1.138	-1.285	
Maximum			(ans)		
Minimum					
SDEV					

DATA SUMMARY	
Velocity, [fps]	
acfm	
scfm	
dscfm	
Ex Air Free cfm	
Est. MM Btu/hr Heat Input	
Est. Firing Rate, lb/hr	

PLANT 10 - ONTARIO HYDRO SAMPLING TRAIN DATA

Location		SCR Inlet Unit 2	SCR Out Unit 2	AHO Unit 2	Stack Unit 2	SCR Inlet Unit 2	SCR Out Unit 2	AHO Unit 2	Stack Unit 2	SCR Inlet Unit 2	SCR Out Unit 2	AHO Unit 2	Stack Unit 2	SCR Inlet Unit 2	SCR Out Unit 2	AHO Unit 2	Stack Unit 2
Date		8/31/2004	8/31/2004	8/31/2004	8/31/2004	9/1/2004	9/1/2004	9/1/2004	9/1/2004	9/1/2004	9/1/2004	9/1/2004	9/1/2004	9/2/2004	9/2/2004	9/2/2004	9/2/2004
Start Time		1345	1345	1345	1345	930	930	930	930	1330	1330	1330	1330	930	930	930	930
Stop Time		1545	1607	1558	1545	1130	1204	1140	1130	1520		1538	1530	1127	1150	1140	1130
Test Number		SCRI-1	SCRO-1	AHO-1	STK-1	SCRI-2	SCRO-2	AHO-2	STK-2	SCRI-3	SCRO-3	AHO-3	STK-3	SCRI-4	SCRO-4	AHO-4	STK-4
Sample Type		OH-Hg	OH-Hg	OH-Hg	OH-Hg	OH-Hg	OH-Hg	OH-Hg	OH-Hg	OH-Hg	OH-Hg	OH-Hg	OH-Hg	OH-Hg	OH-Hg	OH-Hg	OH-Hg
Y factor of dry gas meter	-	0.966	1.038	0.976	1.006	0.966	1.038	0.976	1.006	0.966	1.038	0.976	1.006	0.966	1.038	0.976	1.006
Gas Volume	- ft^3	50.78	39.26	47.91	85.59	50.59	38.16	47.45	81.28	46.20	39.22	47.87	82.37	49.90	38.64	47.63	85.20
Delta H of dry gas meter	- " H_2O	0.54	0.39	0.50	1.37	0.55	0.37	0.50	1.80	0.52	0.38	0.50	1.80	0.56	0.36	0.51	
Meter Temperature	- °F	106.9	107.2	110.7	88.2	99.8	99.6	93.4	80.0	101.0	99.0	99.3	83.1	101.0	97.3	97.3	86.9
C Factor of pitot tube	-	0.846	0.838	0.838	0.806	0.846	0.838	0.838	0.806	0.846	0.838	0.838	0.806	0.846	0.838	0.838	0.806
Nozzle Diameter	- inches	0.248	0.183	0.189	0.213	0.248	0.183	0.189	0.213	0.248	0.183	0.189	0.213	0.248	0.183	0.189	0.213
A n (area of nozzle)	- ft^2	0.00034	0.00018	0.00019	0.00025	0.00034	0.00018	0.00019	0.00025	0.00034	0.00018	0.00019	0.00025	0.00034	0.00018	0.00019	0.00025
Area of Stack (Single or Dual)	- ft^2	1776.0	1984.3	1320.0	1,256.6	1776.0	1984.3	1320.0	1,256.6	1776.0	1984.3	1320.0	1,256.6	1776.0	1984.3	1320.0	1,256.6
H_2O Weight	- gm	94.5	76.4	84.0	307.5	97.2	77.9	80.7	311.4	86.0	81.3	85.7	306.3	105.0	86.4	94.2	318.6
Sample Time	- minutes	120	120	120	120	120	120	120	120	110	120	120	120	117	120	120	120
Barometric Pressure	- " Hg	29.50	29.50	29.50	29.50	29.56	29.56	29.56	29.56	29.55	29.55	29.55	29.55	29.50	29.50	29.50	29.50
Static Pressure	- " H_2O	-7.79	-11.18	-21.73	-1.10	-8.01	-11.58	-21.94	-1.23	-7.95	-11.62	-21.90	-1.01	-7.86	-11.54	-22.52	-1.28
% Oxygen	-	4.0	4.6	4.4	6.6	4.1	4.1	4.5	6.2	4.1	4.0	4.1	6.2	4.1	4.1	4.3	7.0
% Carbon Dioxide	-	16.0	15.5	15.7	14.0	16.0	16.1	15.6	14.0	16.0	16.0	16.0	14.0	16.0	16.0	15.8	13.1
% N_2 + CO	-	80.0	79.9	79.9	79.4	79.9	79.9	79.9	79.8	79.9	80.0	79.9	79.8	79.9	79.9	79.9	79.9
Stack Temp (Dry Bulb)	- °F	640	673	357	130	641	674	357	130	639	675	357	130	636	673	358	129
Stack Temp (Wet Bulb)	- °F																
"S" sample (rms vel head)	- " H_2O	0.286	0.711	0.554	1.041	0.290	0.691	0.575	1.027	0.275	0.712	0.568	1.033	0.300	0.722	0.576	1.138
Dust Wt.	- gm	10.47	8.70	3.78	0.099	11.19	9.34	6.37	0.089	9.46	9.58	4.60	0.096	9.92	9.71	4.60	0.072
Sample Volume	- DSCF	45.09	37.42	42.69	82.11	45.58	36.94	43.69	79.31	41.52	38.00	43.60	79.89	44.78	37.49	43.46	81.55
Sample Volume	- dscm	1.277	1.060	1.209	2.325	1.291	1.046	1.237	2.246	1.176	1.076	1.235	2.262	1.268	1.062	1.231	2.310
ABS ST PRES	- " Hg	28.93	28.68	27.90	29.42	28.97	28.71	27.95	29.47	28.97	28.70	27.94	29.48	28.92	28.65	27.84	29.41
ABS ST TEMP	- °R	1100	1133	817	590	1101	1134	817	590	1099	1135	817	590	1096	1133	818	589
H_2O - % by Vol	- vapor	9.0	8.8	8.5	15.0	9.1	9.0	8.0	15.6	8.9	9.2	8.5	15.3	9.9	9.8	9.3	15.5
Water Volume	- std ft^3	4.45	3.60	3.96	14.48	4.58	3.67	3.80	14.67	4.05	3.83	4.04	14.43	4.95	4.07	4.44	15.01
Dry Molecular Weight	- lb/lb-mole	30.72	30.66	30.69	30.50	30.72	30.73	30.68	30.49	30.72	30.72	30.72	30.49	30.73	30.72	30.70	30.38
Wet Molecular Weight	- lb/lb-mole	29.58	29.55	29.61	28.63	29.56	29.58	29.66	28.54	29.59	29.55	29.65	28.58	29.46	29.47	29.52	28.45
% EXCESS AIR	-	23.4	28.2	26.4	46.0	24.1	23.8	27.1	41.7	24.1	23.4	24.1	41.7	24.0	24.4	25.6	49.7
Dry Mole Frac.	-	0.910	0.912	0.915	0.850	0.909	0.910	0.920	0.844	0.911	0.908	0.915	0.847	0.901	0.902	0.907	0.845
Wet Mole Frac.	-	0.090	0.088	0.085	0.150	0.091	0.090	0.080	0.156	0.089	0.092	0.085	0.153	0.099	0.098	0.093	0.155
Gas Velocity, Direct	- ft/sec	43.85	69.86	53.03	58.84	44.17	68.82	53.93	58.49	42.95	69.94	53.61	58.61	44.94	70.49	54.25	61.69
ACFM	-	4,672,283	8,317,736	4,200,279	4,436,521	4,706,492	8,193,398	4,271,371	4,409,796	4,576,263	8,326,466	4,245,652	4,419,177	4,788,405	8,393,052	4,296,359	4,651,312
DSCFM	-	1,974,354	3,388,215	2,315,879	3,318,554	3,280,329	3,280,329	3,280,329	3,280,329	3,300,121	3,300,121	3,300,121	3,300,121	3,459,306	3,459,306	3,459,306	3,459,306
DSCFM (rounded)		1,974,400	3,388,200	2,315,900	3,318,600	3,280,300	3,280,300	3,280,300	3,280,300	3,300,100	3,300,100	3,300,100	3,300,100	3,459,300	3,459,300	3,459,300	3,459,300
DSCMM		55,914	95,954	65,586	93,981	92,899	92,899	92,899	92,899	93,459	93,459	93,459	93,459	97,968	97,968	97,968	97,968
Stack Based DSCFM	-	2,808,007	2,918,532	2,876,030	3,318,554	2,870,288	2,861,771	2,940,295	3,280,329	2,887,606	2,872,219	2,887,606	3,300,121	2,858,761	2,868,995	2,896,648	3,459,306
Stack Based DSCMM	-	79,523	82,653	81,451	93,981	81,287	81,045	83,269	92,899	81,777	81,341	81,777	93,459	80,950	81,250	82,033	97,968
Excess Air Free DSCFM	-	1,596,495	2,635,999	1,828,325	2,270,590	2,636,820	2,644,667	2,574,038	2,307,217	2,652,729	2,666,940	2,552,729	2,321,138	2,783,996	2,774,065	2,747,583	2,300,687
CALCULATED FIRING RATE:																	
Dry	- lb/min	12,856	20,981	14,723	18,285	20,987	21,050	20,488	18,364	21,546	21,662	21,546	18,853	22,229	22,149	21,938	18,370
Wet	- lb/min	12,856	20,981	14,723	18,285	20,987	21,050	20,488	18,364	21,546	21,662	21,546	18,853	22,229	22,149	21,938	18,370
Dry	- lb/hr	771,383	1,258,845	883,397	1,097,087	1,259,237	1,262,985	1,229,255	1,101,833	1,292,777	1,299,703	1,292,777	1,131,180	1,333,715	1,328,957	1,316,270	1,102,178
Wet	- lb/hr	771,383	1,258,845	883,397	1,097,087	1,259,237	1,262,985	1,229,255	1,101,833	1,292,777	1,299,703	1,292,777	1,131,180	1,333,715	1,328,957	1,316,270	1,102,178
CALCULATED FIRING RATE:																	
Dry	- tons/hr	385.7	629.4	441.7	548.5	629.6	631.5	614.6	550.9	646.4	649.9	646.4	565.6	666.9	664.5	658.1	551.1
Wet	- tons/hr	385.7	629.4	441.7	548.5	629.6	631.5	614.6	550.9	646.4	649.9	646.4	565.6	666.9	664.5	658.1	551.1
HEAT INPUT:																	
MM Btu/hr	-	10,303	16,997	11,800	14,654	17,002	17,053	16,597	14,877	17,194	17,286	17,194	15,045	17,773	17,710	17,541	14,688
PARTICULATE LOADING:																	
Grains/DSCF	-	3.58	3.59	1.37	0.019	3.79	3.90	2.25	0.017	3.52	3.89	1.63	0.019	3.42	4.00	1.63	0.014
lb/hr	-	60,667	104,206	27,153	526.68	106,578	109,675	63,244	488.11	99,475	110,033	46,038	523.58	101,402	118,614	48,392	402.94
lb/MM Btu	-	5.89	6.13	2.30	0.04	6.27	6.43	3.81	0.03	5.79	6.37	2.68	0.03	5.71	6.70	2.76	0.03
Ash Production	lb/hr	74,361	117,450	85,159	105,759	117,487	117,836	114,690	102,801	126,563	127,241	126,563	110,743	127,370	126,915	125,704	105,258
ESP Hopper Ash Ash		60,667	104,206	27,153	526.68	106,578	109,675	63,244	488.11	99,475	110,033	46,038	523.58	101,402	118,614	48,392	402.94
Bottom Ash		13,695	13,245	58,006	105,233	10,909	8,161	51,446	102,313	27,088	17,208	80,525	110,219	25,968	8,301	77,312	104,855
Percent Fly Ash		81.6%	88.7%	31.9%	0.5%	90.7%	93.1%	55.1%	0.5%	78.6%	86.5%	36.4%	0.5%	79.6%	93.5%	38.5%	0.4%
% ISOKINETIC	-	100.9	100.1	104.2	104.8	101.4	100.6	104.1	102.4	103.2	102.1	105.0	102.6	101.0	100.5	104.9	99.9

04/21/05

Hg in Coal [ppm]	0.13	0.13	0.13	0.13	0.11	0.11	0.11	0.11	0.14	0.14	0.14	0.14	0.12	0.12	0.12	0.12
[µg Hg/dscm]	13.24	12.59	12.93	11.21	11.37	11.41	11.10	9.95	14.11	14.19	14.11	12.35	12.66	12.61	12.49	10.46

Date	8/31/2004	8/31/2004	8/31/2004	8/31/2004	9/1/2004	9/1/2004	9/1/2004	9/1/2004	9/1/2004	9/1/2004	9/1/2004	9/1/2004	9/2/2004	9/2/2004	9/2/2004	9/2/2004
COAL DATA:																
% Carbon	73.94	73.94	73.94	73.94	74.97	74.97	74.97	74.97	73.81	73.81	73.81	73.81	74.3	74.3	74.3	74.3
% Hydrogen	4.44	4.44	4.44	4.44	4.32	4.32	4.32	4.32	4.23	4.23	4.23	4.23	4.52	4.52	4.52	4.52
% Nitrogen	1.5	1.5	1.5	1.5	1.68	1.68	1.68	1.68	1.7	1.7	1.7	1.7	1.74	1.74	1.74	1.74
% Sulfur	3.82	3.82	3.82	3.82	3.62	3.62	3.62	3.62	3.76	3.76	3.76	3.76	3.7	3.7	3.7	3.7
% Oxygen	16.30	16.30	16.30	16.30	15.41	15.41	15.41	15.41	16.50	16.50	16.50	16.50	15.74	15.74	15.74	15.74
% Ash	9.64	9.64	9.64	9.64	9.33	9.33	9.33	9.33	9.79	9.79	9.79	9.79	9.55	9.55	9.55	9.55
% Volatile Matter	39.34	39.34	39.34	39.34	39.13	39.13	39.13	39.13	39.35	39.35	39.35	39.35	39.12	39.12	39.12	39.12
Btu/lb	13,357	13,357	13,357	13,357	13,502	13,502	13,502	13,502	13,300	13,300	13,300	13,300	13,326	13,326	13,326	13,326
CARBON CONVERSION	99.0%	99.0%	99.0%	99.0%	99.0%	99.0%	99.0%	99.0%	99.0%	99.0%	99.0%	99.0%	99.0%	99.0%	99.0%	99.0%
CALCULATED FEED	784,639	1,283,202	903,105	1,153,984	1,285,737	1,289,755	1,253,593	1,125,020	1,313,823	1,313,002	1,313,823	1,149,595	1,368,824	1,364,694	1,251,012	1,120,143
F-Factor	9,297	9,305	9,297	9,297	9,305	9,305	9,305	9,305	9,257	9,257	9,257	9,257	9,398	9,398	9,398	9,398
Moisture																

% Water Vapor Calculation:																
Barometric Pressure, in Hg	29.5	29.5	29.5	29.5	29.56	29.56	29.56	29.56	29.55	29.55	29.55	29.55	29.5	29.5	29.5	29.5
DUCT Static Pressure, in H2O	-7.79	-11.18	-21.73	-1.097	-8.01	-11.58	-21.94	-1.232	-7.95	-11.62	-21.9	-1.009	-7.862	-11.54	-22.52	-1.28475
DRY Bulb Temp	639.5	673.4	357.3	130	641.4	674	357	130	639	675.1	356.5	130	636.4	672.5	358.3	129.3
WET Bulb Temp	0	0	0	0	0	0	0	0	0	0	0	0	0	0	0	0
Press, ATMS	14.20	14.08	13.70	14.44	14.22	14.10	13.72	14.47	14.22	14.09	13.72	14.47	14.20	14.07	13.67	14.44
Intermediate result	11.31	11.19	10.81	11.55	11.33	11.20	10.83	11.58	11.33	11.20	10.82	11.58	11.31	11.17	10.78	11.54
Intermediate result	639.50	673.40	357.30	130.00	641.40	674.00	357.00	130.00	639.00	675.10	356.50	130.00	636.40	672.50	358.30	129.30
Intermediate result	-7.80	-7.80	-7.80	-7.80	-7.80	-7.80	-7.80	-7.80	-7.80	-7.80	-7.80	-7.80	-7.80	-7.80	-7.80	-7.80
Intermediate result	6.08	6.08	6.08	6.08	6.08	6.08	6.08	6.08	6.08	6.08	6.08	6.08	6.08	6.08	6.08	6.08
Intermediate result	2,378.9	2,505.0	1,329.2	483.6	2,386.0	2,507.3	1,328.0	483.6	2,377.1	2,511.4	1,326.2	483.6	2,367.4	2,501.7	1,332.9	481.0
Intermediate result	6.08	6.08	6.08	6.08	6.08	6.08	6.08	6.08	6.08	6.08	6.08	6.08	6.08	6.08	6.08	6.08
Intermediate result	2.89	2.89	2.89	2.89	2.89	2.89	2.89	2.89	2.89	2.89	2.89	2.89	2.89	2.89	2.89	2.89
Intermediate result	180.1	82.0	1,349.2	2,021.9	168.2	76.3	1,344.9	2,016.6	177.7	73.7	1,347.6	2,015.9	192.2	88.4	1,352.6	2,026.0
Intermediate result	7,417.5	7,172.9	9,805.6	11,460.3	7,397.3	7,164.7	9,802.6	11,455.0	7,417.3	7,157.3	9,807.5	11,454.3	7,443.0	7,183.2	9,804.7	11,467.4
Percent Water Vapor	2.43	1.14	13.76	17.64	2.27	1.07	13.72	17.60	2.40	1.03	13.74	17.60	2.58	1.23	13.79	17.67

% CO_2	16.00	15.46	15.70	14.00	16.00	16.05	15.60	14.00	16.00	15.99	16.00	14.00	16.02	15.96	15.80	13.10
ppm	160,000	154,600	157,000	140,000	160,000	160,500	156,000	140,000	160,000	159,900	160,000	140,000	160,200	159,600	158,000	131,000
lb/dscf	1.72E-02	1.66E-02	1.69E-02	1.51E-02	1.72E-02	1.72E-02	1.68E-02	1.52E-02	1.72E-02	1.72E-02	1.72E-02	1.52E-02	1.72E-02	1.71E-02	1.70E-02	1.42E-02
lb/hr	2,036,063	3,382,867	2,345,914	3,015,681	3,382,399	3,392,307	3,302,999	2,982,509	3,402,807	3,401,256	3,402,807	3,000,504	3,571,125	3,558,583	3,525,112	2,953,894
lb/hr Carbon	555,290	922,600	639,795	822,458	922,472	925,175	900,818	813,411	928,038	927,615	928,038	818,319	973,943	970,523	961,394	805,607
lb/hr Coal	751,001	1,247,768	865,289	1,112,332	1,230,455	1,234,060	1,201,571	1,084,983	1,257,334	1,256,761	1,257,334	1,108,683	1,310,825	1,306,222	1,293,936	1,084,263

Hg in Coal [ppm]	0.13	0.13	0.13	0.13	0.11	0.11	0.11	0.11	0.14	0.14	0.14	0.14	0.12	0.12	0.12	0.12
Gas Phase Hg Conc., [µg/m³]	13.24	12.59	12.93	11.21	11.37	11.41	11.10	9.95	14.11	14.19	14.11	12.35	12.66	12.61	12.49	10.46
Gas Phase Hg Conc., [µg/m³]	12.89	12.48	12.66	11.36	11.11	11.14	10.85	9.80	13.73	13.72	13.73	12.10	12.44	12.40	12.28	10.29

Impinger Components Wts & Volumes	SCRI-1	SCRO-1	AHO-1	STK-1	SCRI-2	SCRO-2	AHO-2	STK-2	SCRI-3	SCRO-3	AHO-3	STK-3	SCRI-4	SCRO-4	AHO-4	STK-4
Filter Wt., g	10.4714	8.6996	3.7832	0.0985	11.1940	3.3357	5.3668	0.0892	9.4589	9.5759	4.5970	0.0958	9.9203	9.7148	4.5954	0.0718
ppb or ng/filter Hg	<4	<4	6	<5.0	<4	<4	5	<5.0	<4	<4	<4	<5.0	<4	<4	6	<5.0
total ug	<0.04	<0.03	0.02	<5.00E-03	<0.04	<0.04	0.03	<5.00E-03	<0.04	<0.04	<0.02	<5.00E-03	<0.04	<0.04	0.03	<5.00E-03
[ug/dscm]	<0.03	<0.03	0.02	<2.15E-03	<0.03	<0.04	0.03	<2.23E-03	<0.03	<0.04	<0.01	<2.21E-03	<0.03	<0.04	0.02	<2.16E-03
Probe Rinse volume, ml	86	140	162	224	125	108	161	120	62	74	132	128	74	105	136	152
Analytical Hg [ng/ml]	<1.0	<1.0	<1.0	1.2	<0.1	<1.0	<1.0	1.1	<1.0	<1.0	1.2	1.5	<1.0	<1.0	<1.0	1.6
[ug/dscm]	<0.07	<0.13	<0.13	0.12	<0.01	<0.10	<0.13	0.06	<0.05	<0.07	0.13	0.08	<0.06	<0.10	<0.11	0.11
Heated Umbilical Line Rinse volume, ml	127	168	157	NA	51	98	134	NA	118	100	138	NA	93	109	131	NA
Analytical Hg [ng/ml]	<1.0	<1.0	<1.0		1.3	<1.0	1.2		<1.0	<1.0	1.2		<1.0	<1.0	<1.0	
[ug/dscm]	<0.10	<0.16	<0.13		0.05	<0.09	0.13		<0.10	<0.09	0.13		<0.07	<0.10	<0.11	
KCl volume, ml	537	525	531	753	541	527	530	755	520	526	531	745	436	531	537	797
Analytical Hg [ng/ml]	7.3	26.2	29.6	2.7	10.7	25.7	21.3	1.8	8.2	25.9	22.3	1.1	20.1	22.9	20.7	1.1
[ug/dscm]	3.07	12.98	13.00	0.87	4.48	12.95	9.12	0.61	3.63	12.66	9.59	0.36	6.91	11.45	9.03	0.38
Nitric/Peroxide volume, ml	175	174	175	173	175	175	175	176	175	175	175	180	338	175	175	135
Analytical Hg [ng/ml]	2.1	0.4	0.3	<0.20	3.0	0.4	0.3	<0.20	1.8	0.5	0.3	<0.20	9.2	0.8	0.2	<0.20
[ug/dscm]	0.29	0.07	0.04	<0.01	0.41	0.07	0.04	<0.02	0.27	0.08	0.04	<0.02	2.45	0.13	0.03	<0.01
KMnO4 volume, ml	247	246	246	239	245	245	242	243	246	248	247	244	192	248	250	247
Analytical Hg [ng/ml]	35.3	2.1	0.2	6.1	17.8	0.9	0.4	2.4	21.1	1.9	0.6	2.5	21.5	2.9	0.3	6.6
[ug/dscm]	6.83	0.49	0.04	0.63	3.38	0.21	0.08	0.26	4.41	0.44	0.12	0.27	3.26	0.68	0.06	0.71
KMnO4-Acid Rinse volume, ml	100	100	100	100	100	100	100	100	100	100	100	100	100	100	100	100
Analytical Hg [ng/ml]	<1.0	<1.0	<1.0	<1.0	<1.0	<1.0	<1.0	<1.0	<1.0	<1.0	<1.0	<1.0	<1.0	<1.0	<1.0	<1.0
[ug/dscm]	<0.08	<0.09	<0.08	<0.04	<0.08	<0.10	<0.08	<0.04	<0.09	<0.09	<0.08	<0.04	<0.08	<0.09	<0.08	<0.04
Particulate	0.03	0.03	0.02	2.15E-03	0.03	0.04	0.03	2.23E-03	0.03	0.04	0.01	2.21E-03	0.03	0.04	0.02	2.16E-03
Percent of Total	0.31	0.24	0.14	0.13	0.41	0.26	0.27	0.23	0.38	0.26	0.15	0.28	0.24	0.29	0.24	0.17
Oxidized Fraction	3.24	13.27	13.26	0.99	4.55	13.14	9.38	0.66	3.78	12.82	9.25	0.45	7.04	11.66	9.25	0.48
Percent of Total	30.93	95.12	98.62	59.03	53.84	96.98	97.64	67.33	44.05	95.19	97.44	57.39	54.76	92.54	97.96	38.86
Elemental Fraction	7.19	0.65	0.17	0.68	3.86	0.37	0.20	0.32	4.77	0.61	0.24	0.33	5.79	0.90	0.17	0.76
Percent of Total	68.75	4.64	1.24	40.84	45.75	2.75	2.10	32.44	55.57	4.54	2.41	42.33	44.99	7.17	1.81	60.97
Total Hg [$\mu g/m^3$]	10.46	13.95	13.45	1.68	8.44	13.55	9.61	0.99	8.58	13.47	10.11	0.78	12.86	12.60	9.44	1.25
Actual mg/sec																
Particulate	0.031	0.053	0.021	3.37E-03	0.054	0.055	0.040	3.45E-03	0.050	0.055	0.023	3.44E-03	0.051	0.060	0.037	3.53E-03
Oxidized Fraction	3.02	21.22	14.50	1.55	7.04	20.35	14.53	1.03	5.89	19.97	15.35	0.70	11.50	19.03	15.10	0.79
Elemental Fraction	6.70	1.04	0.18	1.07	5.98	0.58	0.31	0.50	7.43	0.95	0.38	0.51	9.45	1.48	0.28	1.24
Total	9.75	22.31	14.70	2.63	13.07	20.98	14.88	1.53	13.36	20.98	15.75	1.21	21.00	20.57	15.42	2.04
Stack Based mg/sec																
Particulate	0.04	0.05	0.03	3.37E-03	0.05	0.05	0.04	3.45E-03	0.04	0.05	0.02	3.44E-03	0.04	0.05	0.03	3.53E-03
Oxidized Fraction	4.29	18.28	18.01	1.55	6.16	17.75	13.02	1.03	5.15	17.38	13.43	0.70	9.50	15.78	12.64	0.79
Elemental Fraction	9.54	0.89	0.23	1.07	5.23	0.50	0.28	0.50	6.50	0.83	0.33	0.51	7.81	1.22	0.23	1.24
Total	13.87	19.22	18.26	2.63	11.44	18.30	13.34	1.53	11.69	18.26	13.78	1.21	17.35	17.06	12.91	2.04
	13,695		58,006	105,233	13,695		51,446	102,313	27,088		51,446	110,219	25,968		51,446	104,855
Coal In [ug/sec]	12,340.9		14,133.0	17,551.7	17,607.8		17,188.6	15,406.8	21,985.3		21,985.3	19,237.1	20,665.4		20,395.1	17,077.8
Bottom Ash	0.0		0.0	0.0	0.0		0.0	0.0	0.0		0.0	0.0	0.0		0.0	0.0
	0.0%		0.0%	0.0%	0.0%		0.0%	0.0%	0.0%		0.0%	0.0%	0.0%		0.0%	0.0%
ESP Hopper Ash	233.6		70.2	0.2	721.0		317.4	0.2	628.1		134.5	0.2	652.7		223.0	0.2
	1.9%		0.5%	0.0%	4.2%		2.1%	0.0%	3.3%		0.7%	0.0%	3.2%		#DIV/0!	0.0%

FGD Solid

	SCRI			SCRO			AHO			STK		
	X	Sd	PRSD	X	Sd	PRSD	X	Sd	PRSD	X	Sd	PRSD
Particulate, [ug/dscm]	0.03	0.001	4.4	0.04	0.002	4.6	0.02	0.005	22.8	0.002	3.61E-05	1.7
Particulate % of Total	0.34	0.07	21.9	0.26	0.02	8.6	0.20	0.05	32.5	0.20	0.07	33.1
Oxidized, [ug/dscm]	4.65	1.68	36.2	12.72	0.74	5.8	10.44	1.90	18.2	0.65	0.25	38.3
Oxidized % of Total	45.90	11.09	24.2	94.96	1.83	1.9	97.91	0.52	0.5	55.65	12.01	21.6
Elemental, [ug/dscm]	5.40	1.43	26.5	0.63	0.22	34.2	0.20	0.04	18.2	0.52	0.23	44.3
Elemental % of Total	53.77	11.09	20.6	4.78	1.82	38.0	1.89	0.50	26.3	44.14	12.03	27.3
Total Hg	10.09	2.07	20.5	13.39	0.57	4.3	10.65	1.89	17.7	1.17	0.39	33.0

	SCRI			SCRO			AHO			STK		
	X	Sd	PRSD	X	Sd	PRSD	X	Sd	PRSD	X	Sd	PRSD
Particulate, [mg/sec]	0.05	0.0105	23.0	0.06	0.003	5.4	0.03	0.010	31.9	0.003	6.83E-05	2.0
Oxidized, [mg/sec]	6.86	3.525	51.4	20.14	0.907	4.5	14.87	0.422	2.8	1.017	3.82E-01	37.6
Elemental, [mg/sec]	7.39	1.494	20.2	1.01	0.368	36.5	0.29	0.082	28.5	0.831	3.83E-01	46.1
Total Hg	14.30	4.759	33.3	21.21	0.758	3.6	15.19	0.482	3.2	1.851	6.19E-01	33.4

	SCRI			SCRO			AHO			STK		
	X	Sd	PRSD	X	Sd	PRSD	X	Sd	PRSD	X	Sd	PRSD
Particulate, [mg/sec]	0.04	0.0020	4.6	0.05	0.002	3.8	0.03	0.007	23.7	0.003	6.83E-05	2.0
Oxidized, [mg/sec]	6.28	2.283	36.4	17.30	1.075	6.2	14.28	2.508	17.6	1.017	3.82E-01	37.6
Elemental, [mg/sec]	7.27	1.841	25.3	0.86	0.295	34.2	0.27	0.049	18.2	0.831	3.83E-01	46.1
Total Hg	13.59	2.737	20.1	18.21	0.885	4.9	14.57	2.484	17.0	1.851	6.19E-01	33.4

APPENDIX B

Plant Process Data

- Coal-firing Rate Data
- Hourly Emission Data

Coal-firing Rate (Integrator Readings)

Test No.	1		2		3		4	
Date	8.31.2004		9.1.2004		9.1.2004		9.2.2004	
Time	13:50	15:20	9:30	12:05	13:50	16:02	8:30	11:10
Pulverizer	Begin	End	Begin	End	Begin	End	Begin	End
1	7314830	7317061	7331600	7333934	7335472	7337383	7352531	7354931
2	1255442	1257593	1271712	1273956	1275435	1277272	1291908	1294217
3	7484338	7484338	7484338	7484338	7484338	7484338	7484338	7484338
4	6886618	6888861	6903473	6905818	6907364	6909284	6924505	6926915
5	4492803	4495016	4509373	4511676	4513196	4515089	4530029	4532396
6	1275229	1277514	1292385	1294774	1296350	1298310	1313795	1316251
7	3820352	3822578	3837075	3839402	3840937	3842847	3857914	3860307
8	505022	507248	521694	524028	525567	527483	535609	537982
9	3347048	3347048	3347048	3347048	3347048	3347048	3347048	3347048
10	1494390	1496618	1511088	1513422	1514960	1516881	1531969	1534365
11	8894587	8894587	8894587	8894587	8894587	8894587	8894587	8894587
12	7767446	7767968	7770895	7771113	7772435	7773166	7776250	7776250
13	673406	673406	676080	676323	676362	676831	681314	681314
14	221751	223978	238387	240687	242205	244079	258925	261301

Plant 10 Unit #2 2004 Q3 Hourly Emissions

Ontario-Hydro Test Time	Time	Gross Gen. (MW)	SO_2 Conc (ppm)	SO_2 Mass (lbs)	NOx Conc (ppm)	NOx Rate (lb/mm Btu)	NOx Mass (lbs)	CO_2 Conc (vol. %)	CO_2 Mass (tons)
Test #1: 13:45-16:07	8/31/04 13:00	1,318	84.3	2,591.3	32.5	0.061	715.4	11.4	1,203.3
	8/31/04 14:00	1,312	88.9	2,710.6	31.3	0.059	686.3	11.4	1,193.5
	8/31/04 15:00	1,287	94.6	2,844.7	32.2	0.061	699.8	11.4	1,177.1
	8/31/04 16:00	1,298	94.9	2,865.3	32.5	0.061	702.7	11.4	1,181.9
	8/31/04 17:00	1,289	98.7	2,967.6	31.5	0.059	682.7	11.5	1,187.3
Test #2: 09:30-12:04	9/1/04 9:00	1,344	121.2	3,467.1	32.6	0.061	671.6	11.5	1,129.6
	9/1/04 10:00	1,348	122.2	3,483.6	32.9	0.061	669.3	11.5	1,125.7
	9/1/04 11:00	1,348	126.1	3,549.8	32.9	0.061	666.6	11.6	1,121.3
	9/1/04 12:00	1,350	126.9	3,554.3	33.3	0.062	674.2	11.6	1,115.6
Test #3: 13:30-15:38	9/1/04 13:00	1,349	121.5	3,390.5	34.7	0.064	693.3	11.6	1,111.5
	9/1/04 14:00	1,347	115.0	3,227.9	33.2	0.062	675.6	11.6	1,118.0
	9/1/04 15:00	1,362	109.4	3,075.9	33.9	0.063	687.7	11.6	1,119.9
	9/1/04 16:00	1,370	113.2	3,183.5	33.7	0.062	676.9	11.6	1,120.2
Test #4: 09:30-11:50	9/2/04 9:00	1,350	149.7	4,388.9	32.1	0.063	673.8	10.9	1,097.3
	9/2/04 10:00	1,350	151.0	4,427.0	33.2	0.065	695.2	10.9	1,097.3
	9/2/04 11:00	1,351	106.6	3,123.2	31.7	0.062	668.7	11.0	1,106.6
	9/2/04 12:00	1,352	140.6	4,093.6	33.5	0.064	698.5	11.2	1,119.7
Test 1 Average =		1,301	92.3	2,795.9	32.0	0.060	697.4	11.4	1,188.6
Test 2 Average =		1,348	124.1	3,513.7	32.9	0.061	670.4	11.6	1,123.1
Test 3 Average =		1,357	114.8	3,219.5	33.9	0.063	683.4	11.6	1,117.4
Test 4 Average =		1,351	137.0	4,008.2	32.6	0.064	684.1	11.0	1,105.2

APPENDIX C

Flue Gas Mercury Data

- Summary of Ontario-Hydro Impinger Analyses Data Sheets
- Recovery Data Sheets

Distribution: Locke, Tseng, Withum
Project No.: 1621-87
Sample Date: 8-31-04

Location: SCR Inlet Task: _____ Test: 1 Operator: JEL

Sample ID	Bottle #	Description	Initial Vol mL	Rinse Vol mL	Gain mL	Final Vol mL	ppb Hg	Total ug of Hg
	S	Filter/Solids						
1	1A	Probe & Filter Rinse				86		
2	1B	Heated Line Rinse				127		
3	2	KCl Impingers	300	150	87	537		
4	3	HNO_3/H_2O_2 Impinger	100	75	0	175		
5	4	$KMnO_4$ Impingers	200	50	-3	247		
6	5	$KMnO_4$ Acid Rinse		100		100		

Filter Gross wt: 12.0376 g
Filter Tare wt: 1.5662 g
Filter Net wt: 10.4714 g

Filter Net wt: 10.4714 g
Probe/Line Rinse wt: 0 g
Total Particulate wt: 10.4714 g

Condensate Total: 94.5 ml

Recovered By: JW

Date: 8-31-04

Location: SCR Outlet Task: _____ Test: 1 Operator: JAW

Sample ID	Bottle #	Description	Initial Vol mL	Rinse Vol mL	Gain mL	Final Vol mL	ppb Hg	Total ug of Hg
	S	Filter/Solids						
7	1A	Probe & Filter Rinse				140		
8	1B	Heated Line Rinse				168		
9	2	KCl Impingers	300	150	75	525		
10	3	HNO_3/H_2O_2 Impinger	100	75	-1	174		
11	4	$KMnO_4$ Impingers	200	50	-4	246		
12	5	$KMnO_4$ Acid Rinse		100		100		

Filter Gross wt: 10.3601 g
Filter Tare wt: 1.6605 g
Filter Net wt: 8.6996 g

Filter Net wt: 8.6996 g
Probe/Line Rinse wt: 0 g
Total Particulate wt: 8.6996 g

Condensate Total: 76.4 ml

Recovered By: JW

Date: 8-31-04

Location: AH Outlet Task: _____ Test: 1 Operator: BPS

Sample ID	Bottle #	Description	Initial Vol mL	Rinse Vol mL	Gain mL	Final Vol mL	ppb Hg	Total ug of Hg
	S	Filter/Solids						
13	1A	Probe & Filter Rinse				162		
14	1B	Heated Line Rinse				157		
15	2	KCl Impingers	300	150	81	531		
16	3	HNO_3/H_2O_2 Impinger	100	75	0	175		
17	4	$KMnO_4$ Impingers	200	50	-4	246		
18	5	$KMnO_4$ Acid Rinse		100		100		

Filter Gross wt: 5.2456 g
Filter Tare wt: 1.2624 g
Filter Net wt: 3.9832 g

Filter Net wt: 3.9832 g
Probe/Line Rinse wt: 0 g
Total Particulate wt: 3.9832 g

Condensate Total: 84.0 ml

Recovered By: JW

Date: 8-31-04

Location: Stack Task: _____ Test: 1 Operator: RLO

Sample ID	Bottle #	Description	Initial Vol mL	Rinse Vol mL	Gain mL	Final Vol mL	ppb Hg	Total ug of Hg
	S	Filter/Solids						
19	1A	Probe & Filter Rinse				224		
—	1B	Heated Line Rinse				—		
20	2	KCl Impingers	300	150	303	753		
21	3	HNO_3/H_2O_2 Impinger	100	75	2	173		
22	4	$KMnO_4$ Impingers	200	50	-11	239		
23	5	$KMnO_4$ Acid Rinse		100		100		

Filter Gross wt: 0.5112 g
Filter Tare wt: 0.4127 g
Filter Net wt: 0.0985 g

Filter Net wt: 0.0985 g
Probe/Line Rinse wt: 0 g
Total Particulate wt: 0.0985 g

Condensate Total: 307.5 ml

Recovered By: JW

Date: 8-31-04

Sample ID	Description	ppb Hg	Total ug of Hg
	3 in. Filter Blank		
	Thimble Blank		
24	KCl Blank		
25	HNO_3 / H2O2 Blank		
26	$KMnO_4$ Blank		
27	HNO_3 / HCl Blank		

Distribution: Locke, Tseng, Wilhum
Project No.: 1621-87
Sample Date: 9-1-04

Location: SCR Inlet Task: _____ Test: 2 Operator: JEL

Sample ID	Bottle #	Description	Initial Vol mL	Rinse Vol mL	Gain mL	Final Vol mL	ppb Hg	Total ug of Hg
	S	Filter/Solids						
28	1A	Probe & Filter Rinse				125		
29	1B	Heated Line Rinse				51		
30	2	KCl Impingers	300	150	91	541		
31	3	HNO_3/H_2O_2 Impinger	100	75	0	175		
32	4	$KMnO_4$ Impingers	200	50	-5	245		
33	5	$KMnO_4$ Acid Rinse		100		100		

Filter Gross wt: 12.4827 g
Filter Tare wt: 1.2887 g
Filter Net wt: 11.1940 g
Filter Net wt: 11.1940 g
Probe/Line Rinse wt: 0 g
Total Particulate wt: 11.1940 g
Condensate Total: 97.2 ml

Recovered By: JW
Date: 9-1-04

Location: SCR Outlet Task: _____ Test: 2 Operator: JAW

Sample ID	Bottle #	Description	Initial Vol mL	Rinse Vol mL	Gain mL	Final Vol mL	ppb Hg	Total ug of Hg
	S	Filter/Solids						
34	1A	Probe & Filter Rinse				108		
35	1B	Heated Line Rinse				98		
36	2	KCl Impingers	300	150	77	527		
37	3	HNO_3/H_2O_2 Impinger	100	75	0	175		
38	4	$KMnO_4$ Impingers	200	50	-5	245		
39	5	$KMnO_4$ Acid Rinse		100		100		

Filter Gross wt: 10.8769 g
Filter Tare wt: 1.5412 g
Filter Net wt: 9.3357 g
Filter Net wt: 9.3357 g
Probe/Line Rinse wt: 0 g
Total Particulate wt: 9.3357 g
Condensate Total: 77.9 ml

Recovered By: JW
Date: 9-1-04

Location: AH Outlet Task: _____ Test: 2 Operator: BPS

Sample ID	Bottle #	Description	Initial Vol mL	Rinse Vol mL	Gain mL	Final Vol mL	ppb Hg	Total ug of Hg
	S	Filter/Solids						
40	1A	Probe & Filter Rinse				161		
41	1B	Heated Line Rinse				134		
42	2	KCl Impingers	300	150	80	530		
43	3	HNO_3/H_2O_2 Impinger	100	75	0	175		
44	4	$KMnO_4$ Impingers	200	50	-8	242		
45	5	$KMnO_4$ Acid Rinse		100		100		

Filter Gross wt: 7.9295 g
Filter Tare wt: 1.5627 g
Filter Net wt: 6.3668 g
Filter Net wt: 6.3668 g
Probe/Line Rinse wt: 0 g
Total Particulate wt: 6.3668 g
Condensate Total: 80.7 ml

Recovered By: JW
Date: 9-1-04

Location: Stack Task: _____ Test: 2 Operator: RLO

Sample ID	Bottle #	Description	Initial Vol mL	Rinse Vol mL	Gain mL	Final Vol mL	ppb Hg	Total ug of Hg
	S	Filter/Solids						
46	1A	Probe & Filter Rinse				120		
—	1B	Heated Line Rinse				—		
47	2	KCl Impingers	300	150	305	755		
48	3	HNO_3/H_2O_2 Impinger	100	75	1	176		
49	4	$KMnO_4$ Impingers	200	50	-7	243		
50	5	$KMnO_4$ Acid Rinse		100		100		

Filter Gross wt: 0.4970 g
Filter Tare wt: 0.4078 g
Filter Net wt: 0.0892 g
Filter Net wt: 0.0892 g
Probe/Line Rinse wt: 0 g
Total Particulate wt: 0.0892 g
Condensate Total: 311.4 ml

Recovered By: JW
Date: 9-1-04

Sample ID	Description	ppb Hg	Total ug of Hg
	3 in. Filter Blank		
	Thimble Blank		
	KCl Blank		
	HNO_3 / H2O2 Blank		
55	$KMnO_4$ Blank		
	HNO_3 / HCl Blank		

Distribution: Locke, Tseng, Withum
Project No.: 1621-87
Sample Date: 9-1-04

Location: SCR Inlet Task: _____ Test: _____ Operator: JEL

Sample ID	Bottle #	Description	Initial Vol mL	Rinse Vol mL	Gain mL	Final Vol mL	ppb Hg	Total ug of Hg
	S	Filter/Solids						
	1A	Probe & Filter Rinse						
	1B	Heated Line Rinse						
	2	KCl Impingers						
	3	HNO_3/H_2O_2 Impinger						
	4	$KMnO_4$ Impingers						
	5	$KMnO_4$ Acid Rinse						

Filter Gross wt: _____g Filter Net wt: _____g
Filter Tare wt: _____g Probe/Line Rinse wt: _____g Condensate Total: _____ml
Filter Net wt: _____g Total Particulate wt: _____g

Recovered By: _____ Date: _____

Location: Blank Task: _____ Test: 2 Operator: JAW

Sample ID	Bottle #	Description	Initial Vol mL	Rinse Vol mL	Gain mL	Final Vol mL	ppb Hg	Total ug of Hg
	S	Filter/Solids						
	1A	Probe & Filter Rinse						
	1B	Heated Line Rinse						
51	2	KCl Impingers	300	150		450		
52	3	HNO_3/H_2O_2 Impinger	100	75		175		
53	4	$KMnO_4$ Impingers	200	50		250		
54	5	$KMnO_4$ Acid Rinse		100		100		

Filter Gross wt: _____g Filter Net wt: _____g
Filter Tare wt: _____g Probe/Line Rinse wt: _____g Condensate Total: _____ml
Filter Net wt: _____g Total Particulate wt: _____g

Recovered By: _____ Date: _____

Location: AH Outlet Task: _____ Test: _____ Operator: BPS

Sample ID	Bottle #	Description	Initial Vol mL	Rinse Vol mL	Gain mL	Final Vol mL	ppb Hg	Total ug of Hg
	S	Filter/Solids						
	1A	Probe & Filter Rinse						
	1B	Heated Line Rinse						
	2	KCl Impingers						
	3	HNO_3/H_2O_2 Impinger						
	4	$KMnO_4$ Impingers						
	5	$KMnO_4$ Acid Rinse						

Filter Gross wt: _____g Filter Net wt: _____g
Filter Tare wt: _____g Probe/Line Rinse wt: _____g Condensate Total: _____ml
Filter Net wt: _____g Total Particulate wt: _____g

Recovered By: _____ Date: _____

Location: Stack Task: _____ Test: _____ Operator: RLO

Sample ID	Bottle #	Description	Initial Vol mL	Rinse Vol mL	Gain mL	Final Vol mL	ppb Hg	Total ug of Hg
	S	Filter/Solids						
	1A	Probe & Filter Rinse						
	1B	Heated Line Rinse						
	2	KCl Impingers						
	3	HNO_3/H_2O_2 Impinger						
	4	$KMnO_4$ Impingers						
	5	$KMnO_4$ Acid Rinse						

Filter Gross wt: _____g Filter Net wt: _____g
Filter Tare wt: _____g Probe/Line Rinse wt: _____g Condensate Total: _____ml
Filter Net wt: _____g Total Particulate wt: _____g

Recovered By: _____ Date: _____

Sample ID	Description	ppb Hg	Total ug of Hg
	3 in. Filter Blank		
	Thimble Blank		
	KCl Blank		
	HNO_3 / H2O2 Blank		
	$KMnO_4$ Blank		
	HNO_3 / HCl Blank		

Distribution: Locke, Tseng, Witham
Project No.: 1621-87
Sample Date: 9-1-04

Location: SCR Inlet Task: _____ Test: 3 Operator: JEL

Sample ID	Bottle #	Description	Initial Vol mL	Rinse Vol mL	Gain mL	Final Vol mL	ppb Hg	Total ug of Hg
	S	Filter/Solids						
56	1A	Probe & Filter Rinse				42		
57	1B	Heated Line Rinse				118		
58	2	KCl Impingers	300	150	70	520		
59	3	HNO_3/H_2O_2 Impinger	100	75	0	175		
60	4	$KMnO_4$ Impingers	200	50	4	246		
61	5	$KMnO_4$ Acid Rinse		100		100		

Filter Gross wt: 10.6420 g
Filter Tare wt: 1.5088 g
Filter Net wt: 9.1532 g

Filter Net wt: 2.1532 g
Probe/Line Rinse wt: 0.3057 g
Total Particulate wt: 2.4589 g

Condensate Total: 86.0 ml

Recovered By: Jr

Date: 9-1-04

Location: SCR Outlet Task: _____ Test: 3 Operator: JAW

Sample ID	Bottle #	Description	Initial Vol mL	Rinse Vol mL	Gain mL	Final Vol mL	ppb Hg	Total ug of Hg
	S	Filter/Solids						
62	1A	Probe & Filter Rinse				74		
63	1B	Heated Line Rinse				100		
64	2	KCl Impingers	300	150	76	526		
65	3	HNO_3/H_2O_2 Impinger	100	75	0	175		
66	4	$KMnO_4$ Impingers	200	50	-2	248		
67	5	$KMnO_4$ Acid Rinse		100		100		

Filter Gross wt: 11.0929 g
Filter Tare wt: 1.5169 g
Filter Net wt: 9.5759 g

Filter Net wt: 9.5759 g
Probe/Line Rinse wt: 0 g
Total Particulate wt: 9.5759 g

Condensate Total: 81.3 ml

Recovered By: Jr

Date: 9-1-04

Location: AH Outlet Task: _____ Test: 3 Operator: BPS

Sample ID	Bottle #	Description	Initial Vol mL	Rinse Vol mL	Gain mL	Final Vol mL	ppb Hg	Total ug of Hg
	S	Filter/Solids						
68	1A	Probe & Filter Rinse				132		
69	1B	Heated Line Rinse				138		
70	2	KCl Impingers	300	150	81	531		
71	3	HNO_3/H_2O_2 Impinger	100	75	0	175		
72	4	$KMnO_4$ Impingers	200	50	-3	247		
73	5	$KMnO_4$ Acid Rinse		100		100		

Filter Gross wt: 5.9212 g
Filter Tare wt: 1.3242 g
Filter Net wt: 4.5970 g

Filter Net wt: 4.5970 g
Probe/Line Rinse wt: 0 g
Total Particulate wt: 4.5970 g

Condensate Total: 85.7 ml

Recovered By: Jr

Date: 9-1-04

Location: Stack Task: _____ Test: 3 Operator: RLO

Sample ID	Bottle #	Description	Initial Vol mL	Rinse Vol mL	Gain mL	Final Vol mL	ppb Hg	Total ug of Hg
	S	Filter/Solids						
74	1A	Probe & Filter Rinse				128		
—	1B	Heated Line Rinse				—		
75	2	KCl Impingers	300	150	295	745		
76	3	HNO_3/H_2O_2 Impinger	100	75	5	180		
77	4	$KMnO_4$ Impingers	200	50	-6	244		
78	5	$KMnO_4$ Acid Rinse		100		100		

Filter Gross wt: 0.5108 g
Filter Tare wt: 0.4150 g
Filter Net wt: 0.0958 g

Filter Net wt: 0.0958 g
Probe/Line Rinse wt: 0 g
Total Particulate wt: 0.0958 g

Condensate Total: 306.3 ml

Recovered By: Jr

Date: 9-1-04

Sample ID	Description	ppb Hg	Total ug of Hg
	3 in. Filter Blank		
	Thimble Blank		
	KCl Blank		
	HNO_3 / H2O2 Blank		
79	$KMnO_4$ Blank		
	HNO_3 / HCl Blank		

Distribution: Locke, Tsong, Withum
Project No.: 1821-87
Sample Date: 9-2-04

Location: SCR Inlet Task: _____ Test: 4 Operator: JEL

Sample ID	Bottle #	Description	Initial Vol mL	Rinse Vol mL	Gain mL	Final Vol mL	ppb Hg	Total ug of Hg
	S	Filter/Solids						
80	1A	Probe & Filter Rinse				74		
81	1B	Heated Line Rinse				93		
82	2	KCl Impingers	200	150	86	436		
83	3	HNO_3/H_2O_2 Impinger	200	75	63	338		
84	4	$KMnO_4$ Impingers	200	50	-58	192		
85	5	$KMnO_4$ Acid Rinse		100		100		

Filter Gross wt: 11.1455 g
Filter Tare wt: 1.2252 g
Filter Net wt: 9.9203 g

Filter Net wt: 9.9203 g
Probe/Line Rinse wt: 0 g
Total Particulate wt: 9.9203 g

Condensate Total: 105.0 ml

Recovered By: [signature]

Date: 9-2-04

Location: SCR Outlet Task: _____ Test: 4 Operator: JAW

Sample ID	Bottle #	Description	Initial Vol mL	Rinse Vol mL	Gain mL	Final Vol mL	ppb Hg	Total ug of Hg
	S	Filter/Solids						
86	1A	Probe & Filter Rinse				105		
87	1B	Heated Line Rinse				109		
88	2	KCl Impingers	300	150	81	531		
89	3	HNO_3/H_2O_2 Impinger	100	75	0	175		
90	4	$KMnO_4$ Impingers	200	50	-2	248		
91	5	$KMnO_4$ Acid Rinse		100		100		

Filter Gross wt: 11.4095 g
Filter Tare wt: 1.6947 g
Filter Net wt: 9.7148 g

Filter Net wt: 9.7148 g
Probe/Line Rinse wt: 0 g
Total Particulate wt: 9.7148 g

Condensate Total: 86.4 ml

Recovered By: [signature]

Date: 9-2-04

Location: AH Outlet Task: _____ Test: 4 Operator: BPS

Sample ID	Bottle #	Description	Initial Vol mL	Rinse Vol mL	Gain mL	Final Vol mL	ppb Hg	Total ug of Hg
	S	Filter/Solids						
92	1A	Probe & Filter Rinse				136		
93	1B	Heated Line Rinse				131		
94	2	KCl Impingers	300	150	87	537		
95	3	HNO_3/H_2O_2 Impinger	100	75	0	175		
96	4	$KMnO_4$ Impingers	200	50	0	250		
97	5	$KMnO_4$ Acid Rinse		100		100		

Filter Gross wt: 6.0265 g
Filter Tare wt: 1.4311 g
Filter Net wt: 4.5954 g

Filter Net wt: 4.5954 g
Probe/Line Rinse wt: 0 g
Total Particulate wt: 4.5954 g

Condensate Total: 94.2 ml

Recovered By: [signature]

Date: 9-2-04

Location: Stack Task: _____ Test: 4 Operator: RLO

Sample ID	Bottle #	Description	Initial Vol mL	Rinse Vol mL	Gain mL	Final Vol mL	ppb Hg	Total ug of Hg
	S	Filter/Solids						
98	1A	Probe & Filter Rinse				152		
—	1B	Heated Line Rinse				—		
99	2	KCl Impingers	300	150	347	797		
100	3	HNO_3/H_2O_2 Impinger	100	75	-40	135		
101	4	$KMnO_4$ Impingers	200	50	-3	247		
102	5	$KMnO_4$ Acid Rinse		100		100		

Filter Gross wt: 0.4829 g
Filter Tare wt: 0.4111 g
Filter Net wt: 0.0718 g

Filter Net wt: 0.0718 g
Probe/Line Rinse wt: 0 g
Total Particulate wt: 0.0718 g

Condensate Total: 318.6 ml

Recovered By: [signature]

Date: 9-2-04

Sample ID	Description	ppb Hg	Total ug of Hg
	3 in. Filter Blank		
	Thimble Blank		
	KCl Blank		
	HNO_3 / H2O2 Blank		
103	$KMnO_4$ Blank		
	HNO_3 / HCl Blank		

Project No	Test	Date	Loc.	Operator	Sample ID #	Task	Description	Anal No.	Hg	units
1621-87	1	09/03/04	SCRI	#VALUE!	1		PROBE & FILTER RINSE	20044438	<1.0	ng/ml
1621-87	1	09/03/04	SCRI	#VALUE!	2		HEATED LINE RINSE	20044439	<1.0	ng/ml
1621-87	1	09/03/04	SCRI	#VALUE!	3		KCL IMPINGER	20044440	7.3	ng/ml
1621-87	1	09/03/04	SCRI	#VALUE!	4		HNO3/H2O2 IMPINGER	20044441	2.1	ng/ml
1621-87	1	09/03/04	SCRI	#VALUE!	5		KMNO4 IMPINGER	20044442	35.3	ng/ml
1621-87	1	09/03/04	SCRI	#VALUE!	6		KMNO4 ACID RINSE	20044443	<1.0	ng/ml
1621-87	1	09/03/04	SCRO	#VALUE!	7		PROBE & FILTER RINSE	20044444	<1.0	ng/ml
1621-87	1	09/03/04	SCRO	#VALUE!	8		HEATED LINE RINSE	20044445	<1.0	ng/ml
1621-87	1	09/03/04	SCRO	#VALUE!	9		KCL IMPINGER	20044446	26.2	ng/ml
1621-87	1	09/03/04	SCRO	#VALUE!	10		HNO3/H2O2 IMPINGER	20044447	0.4	ng/ml
1621-87	1	09/03/04	SCRO	#VALUE!	11		KMNO4 IMPINGER	20044448	2.1	ng/ml
1621-87	1	09/03/04	SCRO	#VALUE!	12		KMNO4 ACID RINSE	20044449	<1.0	ng/ml
1621-87	1	09/03/04	AHO	#VALUE!	13		PROBE & FILTER RINSE	20044450	<1.0	ng/ml
1621-87	1	09/03/04	AHO	#VALUE!	14		HEATED LINE RINSE	20044451	<1.0	ng/ml
1621-87	1	09/03/04	AHO	#VALUE!	15		KCL IMPINGER	20044452	29.6	ng/ml
1621-87	1	09/03/04	AHO	#VALUE!	16		HNO3/H2O2 IMPINGER	20044453	0.3	ng/ml
1621-87	1	09/03/04	AHO	#VALUE!	17		KMNO4 IMPINGER	20044454	0.2	ng/ml
1621-87	1	09/03/04	AHO	#VALUE!	18		KMNO4 ACID RINSE	20044455	<1.0	ng/ml
1621-87	1	09/03/04	STK	#VALUE!	19		PROBE & FILTER RINSE	20044456	1.2	ng/ml
1621-87	1	09/03/04	STK	#VALUE!	20		KCL IMPINGER	20044457	2.7	ng/ml
1621-87	1	09/03/04	STK	#VALUE!	21		HNO3/H2O2 IMPINGER	20044458	<0.2	ng/ml
1621-87	1	09/03/04	STK	#VALUE!	22		KMNO4 IMPINGER	20044459	8.1	ng/ml
1621-87	1	09/03/04	STK	#VALUE!	23		KMNO4 ACID RINSE	20044460	<1.0	ng/ml
1621-87	#VALUE!	09/03/04	#VALUE!	#VALUE!	24	#VALUE!	KCL BLANK	20044461	<0.2	ng/ml
1621-87	#VALUE!	09/03/04	#VALUE!	#VALUE!	25	#VALUE!	HNO3/H2O2 BLANK	20044462	<0.2	ng/ml
1621-87	#VALUE!	09/03/04	#VALUE!	#VALUE!	26	#VALUE!	KMNO4 BLANK	20044463	<0.2	ng/ml
1621-87	#VALUE!	09/03/04	#VALUE!	#VALUE!	27	#VALUE!	HNO3/HCL BLANK	20044464	0.2	ng/ml
1621-87	2	09/03/04	SCRI	#VALUE!	28		PROBE & FILTER RINSE	20044465	<0.1	ng/ml
1621-87	2	09/03/04	SCRI	#VALUE!	29		HEATED LINE RINSE	20044466	1.3	ng/ml
1621-87	2	09/03/04	SCRI	#VALUE!	30		KCL IMPINGER	20044467	10.7	ng/ml
1621-87	2	09/03/04	SCRI	#VALUE!	31		HNO3/H2O2 IMPINGER	20044468	3.0	ng/ml
1621-87	2	09/03/04	SCRI	#VALUE!	32		KMNO4 IMPINGER	20044469	17.8	ng/ml
1621-87	2	09/03/04	SCRI	#VALUE!	33		KMNO4 ACID RINSE	20044470	<1.0	ng/ml
1621-87	2	09/03/04	SCRO	#VALUE!	34		PROBE & FILTER RINSE	20044471	<1.0	ng/ml
1621-87	2	09/03/04	SCRO	#VALUE!	35		HEATED LINE RINSE	20044472	<1.0	ng/ml
1621-87	2	09/03/04	SCRO	#VALUE!	36		KCL IMPINGER	20044473	25.7	ng/ml
1621-87	2	09/03/04	SCRO	#VALUE!	37		HNO3/H2O2 IMPINGER	20044474	0.4	ng/ml
1621-87	2	09/03/04	SCRO	#VALUE!	38		KMNO4 IMPINGER	20044475	0.9	ng/ml
1621-87	2	09/03/04	SCRO	#VALUE!	39		KMNO4 ACID RINSE	20044476	<1.0	ng/ml
1621-87	2	09/03/04	AHO	#VALUE!	40		PROBE & FILTER RINSE	20044477	<1.0	ng/ml
1621-87	2	09/03/04	AHO	#VALUE!	41		HEATED LINE RINSE	20044478	1.2	ng/ml
1621-87	2	09/03/04	AHO	#VALUE!	42		KCL IMPINGER	20044479	21.3	ng/ml
1621-87	2	09/03/04	AHO	#VALUE!	43		HNO3/H2O2 IMPINGER	20044480	0.3	ng/ml
1621-87	2	09/03/04	AHO	#VALUE!	44		KMNO4 IMPINGER	20044481	0.4	ng/ml
1621-87	2	09/03/04	AHO	#VALUE!	45		KMNO4 ACID RINSE	20044482	<1.0	ng/ml
1621-87	2	09/03/04	STK	#VALUE!	46		PROBE & FILTER RINSE	20044483	1.1	ng/ml
1621-87	2	09/03/04	STK	#VALUE!	47		KCL IMPINGER	20044484	1.8	ng/ml
1621-87	2	09/03/04	STK	#VALUE!	48		HNO3/H2O2 IMPINGER	20044485	<0.2	ng/ml
1621-87	2	09/03/04	STK	#VALUE!	49		KMNO4 IMPINGER	20044486	2.4	ng/ml
1621-87	2	09/03/04	STK	#VALUE!	50		KMNO4 ACID RINSE	20044487	<1.0	ng/ml
1621-87	2	09/03/04	BLK	#VALUE!	51		KCL IMPINGER	20044488	<0.2	ng/ml
1621-87	2	09/03/04	BLK	#VALUE!	52		HNO3/H2O2 IMPINGER	20044489	<0.2	ng/ml
1621-87	2	09/03/04	BLK	#VALUE!	53		KMNO4 IMPINGER	20044490	<0.2	ng/ml
1621-87	2	09/03/04	BLK	#VALUE!	54		KMNO4 ACID RINSE	20044491	<1.0	ng/ml
1621-87	2	09/03/04	BLK	#VALUE!	55		KMNO4 BLANK	20044492	<0.2	ng/ml
1621-87	3	09/03/04	SCRI	#VALUE!	56		PROBE & FILTER RINSE	20044493	<1.0	ng/ml
1621-87	3	09/03/04	SCRI	#VALUE!	57		HEATED LINE RINSE	20044494	<1.0	ng/ml
1621-87	3	09/03/04	SCRI	#VALUE!	58		KCL IMPINGER	20044495	8.2	ng/ml
1621-87	3	09/03/04	SCRI	#VALUE!	59		HNO3/H2O2 IMPINGER	20044496	1.8	ng/ml
1621-87	3	09/03/04	SCRI	#VALUE!	60		KMNO4 IMPINGER	20044497	21.1	ng/ml
1621-87	3	09/03/04	SCRI	#VALUE!	61		KMNO4 ACID RINSE	20044498	<1.0	ng/ml
1621-87	3	09/03/04	SCRO	#VALUE!	62		PROBE & FILTER RINSE	20044499	<1.0	ng/ml
1621-87	3	09/03/04	SCRO	#VALUE!	63		HEATED LINE RINSE	20044500	<1.0	ng/ml
1621-87	3	09/03/04	SCRO	#VALUE!	64		KCL IMPINGER	20044501	25.9	ng/ml
1621-87	3	09/03/04	SCRO	#VALUE!	65		HNO3/H2O2 IMPINGER	20044502	0.5	ng/ml
1621-87	3	09/03/04	SCRO	#VALUE!	66		KMNO4 IMPINGER	20044503	1.9	ng/ml
1621-87	3	09/03/04	SCRO	#VALUE!	67		KMNO4 ACID RINSE	20044504	<1.0	ng/ml

1621-87	3	09/03/04	AHO	#VALUE!	68		PROBE & FILTER RINSE	20044505	1.2	ng/ml
1621-87	3	09/03/04	AHO	#VALUE!	69		HEATED LINE RINSE	20044506	1.2	ng/ml
1621-87	3	09/03/04	AHO	#VALUE!	70		KCL IMPINGER	20044507	22.3	ng/ml
1621-87	3	09/03/04	AHO	#VALUE!	71		HNO3/H2O2 IMPINGER	20044508	0.3	ng/ml
1621-87	3	09/03/04	AHO	#VALUE!	72		KMNO4 IMPINGER	20044509	0.6	ng/ml
1621-87	3	09/03/04	AHO	#VALUE!	73		KMNO4 ACID RINSE	20044510	<1.0	ng/ml
1621-87	3	09/03/04	STK	#VALUE!	74		PROBE & FILTER RINSE	20044511	1.5	ng/ml
1621-87	3	09/03/04	STK	#VALUE!	75		KCL IMPINGER	20044512	1.1	ng/ml
1621-87	3	09/03/04	STK	#VALUE!	76		HNO3/H2O2 IMPINGER	20044513	<0.2	ng/ml
1621-87	3	09/03/04	STK	#VALUE!	77		KMNO4 IMPINGER	20044514	2.5	ng/ml
1621-87	3	09/03/04	STK	#VALUE!	78		KMNO4 ACID RINSE	20044515	<1.0	ng/ml
1621-87	#VALUE!	09/03/04	#VALUE!	#VALUE!	79	#VALUE!	KMNO4 BLANK	20044516	<0.2	ng/ml
1621-87	4	09/03/04	SCRI	#VALUE!	80		PROBE & FILTER RINSE	20044517	<1.0	ng/ml
1621-87	4	09/03/04	SCRI	#VALUE!	81		HEATED LINE RINSE	20044518	<1.0	ng/ml
1621-87	4	09/03/04	SCRI	#VALUE!	82		KCL IMPINGER	20044519	20.1	ng/ml
1621-87	4	09/03/04	SCRI	#VALUE!	83		HNO3/H2O2 IMPINGER	20044520	9.2	ng/ml
1621-87	4	09/03/04	SCRI	#VALUE!	84		KMNO4 IMPINGER	20044521	21.5	ng/ml
1621-87	4	09/03/04	SCRI	#VALUE!	85		KMNO4 ACID RINSE	20044522	<1.0	ng/ml
1621-87	4	09/03/04	SCRO	#VALUE!	86		PROBE & FILTER RINSE	20044523	<1.0	ng/ml
1621-87	4	09/03/04	SCRO	#VALUE!	87		HEATED LINE RINSE	20044524	<1.0	ng/ml
1621-87	4	09/03/04	SCRO	#VALUE!	88		KCL IMPINGER	20044525	22.9	ng/ml
1621-87	4	09/03/04	SCRO	#VALUE!	89		HNO3/H2O2 IMPINGER	20044526	0.8	ng/ml
1621-87	4	09/03/04	SCRO	#VALUE!	90		KMNO4 IMPINGER	20044527	2.9	ng/ml
1621-87	4	09/03/04	SCRO	#VALUE!	91		KMNO4 ACID RINSE	20044528	<1.0	ng/ml
1621-87	4	09/03/04	AHO	#VALUE!	92		PROBE & FILTER RINSE	20044529	<1.0	ng/ml
1621-87	4	09/03/04	AHO	#VALUE!	93		HEATED LINE RINSE	20044530	<1.0	ng/ml
1621-87	4	09/03/04	AHO	#VALUE!	94		KCL IMPINGER	20044531	20.7	ng/ml
1621-87	4	09/03/04	AHO	#VALUE!	95		HNO3/H2O2 IMPINGER	20044532	0.2	ng/ml
1621-87	4	09/03/04	AHO	#VALUE!	96		KMNO4 IMPINGER	20044533	0.3	ng/ml
1621-87	4	09/03/04	AHO	#VALUE!	97		KMNO4 ACID RINSE	20044534	<1.0	ng/ml
1621-87	4	09/03/04	STK	#VALUE!	98		PROBE & FILTER RINSE	20044535	1.6	ng/ml
1621-87	4	09/03/04	STK	#VALUE!	99		KCL IMPINGER	20044536	1.1	ng/ml
1621-87	4	09/03/04	STK	#VALUE!	100		HNO3/H2O2 IMPINGER	20044537	<0.2	ng/ml
1621-87	4	09/03/04	STK	#VALUE!	101		KMNO4 IMPINGER	20044538	6.6	ng/ml
1621-87	4	09/03/04	STK	#VALUE!	102		KMNO4 ACID RINSE	20044539	<1.0	ng/ml
1621-87	#VALUE!	09/03/04	#VALUE!	#VALUE!	103	#VALUE!	KMNO4 BLANK	20044540	<0.2	ng/ml

ANALNUM	SAMPLE	DATE	DESCR	Moisture	Ash	Carbon	Hydrogen	SiO2	Al2O3	TiO2	Fe2O3	CaO	MgO	Na2O	K2O	P2O5	SO3	Hg (as determined)	units
20044712	1	08/30/04	SCR INLET TEST 1 THIMBLE															<0.004	ppm
20044713	6	08/30/04	SCR OUTLET TEST 1 THIMBLE															<0.004	ppm
20044714	11	08/30/04	AIR HEATER OUTLET TEST 1 THIMB															0.006	ppm
20044715	2	09/01/04	SCR INLET TEST 2 THIMBLE															<0.004	ppm
20044716	8	09/01/04	SCR OUTLET TEST 2 THIMBLE															<0.004	ppm
20044717	12	09/01/04	AIR HEATER OUTLET TEST 2 THIMB															0.005	ppm
20044718	3	09/01/04	SCR INLET TEST 3 THIMBLE															<0.004	ppm
20044719	7	09/01/04	SCR OUTLET TEST 3 THIMBLE															<0.004	ppm
20044720	13	09/01/04	AIR HEATER OUTLET TEST 3 THIMB															<0.004	ppm
20044721	5	09/02/04	SCR INLET TEST 4 THIMBLE															<0.004	ppm
20044722	9	09/02/04	SCR OUTLET TEST 4 THIMBLE															<0.004	ppm
20044723	14	09/02/04	AIR HEATER OUTLET TEST 4 THIMB															0.006	ppm
20044724	1	08/31/04	STACK TEST 1 3" FILTER															<5.0	ng/filter
20044725	2	09/01/04	STACK TEST 2 3" FILTER															<5.0	ng/filter
20044726	3	09/01/04	STACK TEST 3 3" FILTER															<5.0	ng/filter
20044727	4	09/02/04	STACK TEST 4 3" FILTER															<5.0	ng/filter
20044728	BLANK THIMBLE	09/02/04	BLANK THIMBLE															<0.005	ppm
20044729	BLANK 3" FILTER	09/02/04	BLANK 3" FILTER															<5.0	ng/filter

APPENDIX D

Process Material Data

- Coal Analysis Data Sheets
- Mill Rejects Analysis Data Sheets
- Bottom Ash Analysis Data Sheets
- ESP Hopper Ash Analysis Data Sheets
- Lime Slurry Analysis Data Sheets
- FGD Slurry Analysis Data Sheets
- FGD Makeup Water Analysis Data Sheet
- Trona Analysis Data Sheets
- Urea Solution Analysis data Sheets

CONSOL ENERGY INC.
RESEARCH & DEVELOPMENT
ANALYTICAL LABORATORY
4000 BROWNSVILLE ROAD, SOUTH PARK, PA 15129

DESCRIPTION *COAL TEST 1*
PLANT NO. 10 *UNIT 2*
DATE SAMPLED *08/31/04*
SAMPLE NUMBER 1

DATE LOGGED *09/10/04*
DATE COMPLETED *09/21/04*
PROJECT NUMBER *1621-87 -*
ANALYTICAL NUMBER **044630**

ANALYSIS REPORT

PROXIMATE	(Dry)%
Ash	9.64
Volatile Matter	39.34
Fixed Carbon	51.02
Sulfur, Total	3.82
BTU/lb	13357
MAF BTU/lb	14782

ULTIMATE	(Dry)%
Carbon	73.94
Hydrogen	4.44
Nitrogen	1.50
Chlorine	0.063
Sulfur, Total	3.82
Ash	9.64
Oxygen (DIFF)	6.60

MAJOR ASH ELEM	%
Ignited at 75 C	
SiO2	43.21
Al2O3	21.16
TiO2	0.88
Fe2O3	26.63
CaO	2.93
MgO	0.76
Na2O	0.42
K2O	1.59
P2O5	0.28
SO3	3.08
UND	-0.94

MISC. (As Det.)

Hg 0.127 PPM

AS DETERMINED MOISTURE: 1.98 %

DISTRIBUTION:
S. TSENG

Approved for transmittal _____

CONSOL ENERGY INC.
RESEARCH & DEVELOPMENT
ANALYTICAL LABORATORY
4000 BROWNSVILLE ROAD, SOUTH PARK, PA 15129

DESCRIPTION *COAL TEST 2*
PLANT NO. 10 *UNIT 2*
DATE SAMPLED *09/01/04*
SAMPLE NUMBER 2

DATE LOGGED *09/10/04*
DATE COMPLETED *09/21/04*
PROJECT NUMBER *1621-87 -*
ANALYTICAL NUMBER 044631

ANALYSIS REPORT

PROXIMATE	(Dry)%
Ash	9.33
Volatile Matter	39.13
Fixed Carbon	51.54
Sulfur, Total	3.62
BTU/lb	13502
MAF BTU/lb	14891

ULTIMATE	(Dry)%
Carbon	74.97
Hydrogen	4.32
Nitrogen	1.68
Chlorine	0.061
Sulfur, Total	3.62
Ash	9.33
Oxygen (DIFF)	6.02

MAJOR ASH ELEM	%
Ignited at 75 C	
SiO2	42.72
Al2O3	20.77
TiO2	0.86
Fe2O3	27.02
CaO	3.17
MgO	0.76
Na2O	0.48
K2O	1.58
P2O5	0.38
SO3	2.78
UND	-0.52

MISC. (As Det.)

Hg 0.111 PPM

AS DETERMINED MOISTURE: 1.73 %

DISTRIBUTION:
S. TSENG

Approved for transmittal _____

CONSOL ENERGY INC.
RESEARCH & DEVELOPMENT
ANALYTICAL LABORATORY
4000 BROWNSVILLE ROAD, SOUTH PARK, PA 15129

DESCRIPTION *COAL TEST 3* *UNIT 2*
PLANT NO. 10
DATE SAMPLED *09/01/04*
SAMPLE NUMBER 3

DATE LOGGED *09/10/04*
DATE COMPLETED *09/21/04*
PROJECT NUMBER *1621-87 -*
ANALYTICAL NUMBER 044632

ANALYSIS REPORT

PROXIMATE	(Dry)%
Ash	9.79
Volatile Matter	39.35
Fixed Carbon	50.86
Sulfur, Total	3.76
BTU/lb	13300
MAF BTU/lb	14743

ULTIMATE	(Dry)%
Carbon	73.81
Hydrogen	4.23
Nitrogen	1.70
Chlorine	0.065
Sulfur, Total	3.76
Ash	9.79
Oxygen (DIFF)	6.64

MAJOR ASH ELEM	%
Ignited at 75 C	
SiO2	43.51
Al2O3	21.24
TiO2	0.88
Fe2O3	25.59
CaO	3.16
MgO	0.74
Na2O	0.44
K2O	1.61
P2O5	0.31
SO3	3.27
UND	-0.75

MISC. (As Det.)

Hg 0.135 PPM

AS DETERMINED MOISTURE: 1.96 %

DISTRIBUTION:
S. TSENG

Approved for transmittal _____

CONSOL ENERGY INC.
RESEARCH & DEVELOPMENT
ANALYTICAL LABORATORY
4000 BROWNSVILLE ROAD, SOUTH PARK, PA 15129

DESCRIPTION *COAL TEST 4*
PLANT NO. 10 *UNIT 2*
DATE SAMPLED *09/02/04*
SAMPLE NUMBER 4

DATE LOGGED *09/10/04*
DATE COMPLETED *09/21/04*
PROJECT NUMBER *1621-87 -*
ANALYTICAL NUMBER **044633**

ANALYSIS REPORT

PROXIMATE	(Dry)%
Ash	9.55
Volatile Matter	39.12
Fixed Carbon	51.33
Sulfur, Total	3.70
BTU/lb	13326
MAF BTU/lb	14733

ULTIMATE	(Dry)%
Carbon	74.30
Hydrogen	4.52
Nitrogen	1.74
Chlorine	0.060
Sulfur, Total	3.70
Ash	9.55
Oxygen (DIFF)	6.13

MAJOR ASH ELEM	%
Ignited at 75 C	
SiO2	43.47
Al2O3	20.76
TiO2	0.87
Fe2O3	26.46
CaO	3.11
MgO	0.77
Na2O	0.44
K2O	1.62
P2O5	0.33
SO3	2.87
UND	-0.70

MISC. (As Det.)

Hg 0.123 PPM

AS DETERMINED MOISTURE: 1.77 %

DISTRIBUTION:
S. TSENG

Approved for transmittal _____

CONSOL ENERGY INC.
RESEARCH & DEVELOPMENT
ANALYTICAL LABORATORY
4000 BROWNSVILLE ROAD, SOUTH PARK, PA 15129

DESCRIPTION *MILL REJECTS TEST 1*
PLANT NO. 10 *UNIT 2*
DATE SAMPLED *08/31/04*
SAMPLE NUMBER *1*

DATE LOGGED *09/17/04*
DATE COMPLETED *09/21/04*
PROJECT NUMBER *1621-87 -*
ANALYTICAL NUMBER 044883

ANALYSIS REPORT

PROXIMATE	(Dry)%
Ash	83.34
Volatile Matter	20.45
Fixed Carbon	-3.79
Sulfur, Total	10.85

MISC. (As Det.)	
Hg	0.985 PPM

ULTIMATE	(Dry)%
Carbon	7.02
Chlorine	0.011
Sulfur, Total	10.85
Ash	83.34

MAJOR ASH ELEM	%
Ignited at 75 C	
SiO2	28.11
Al2O3	6.86
TiO2	0.35
Fe2O3	28.25
CaO	19.05
MgO	3.58
Na2O	0.32
K2O	0.67
P2O5	0.10
SO3	13.73
UND	-1.02

AS DETERMINED MOISTURE: 0.48 %

DISTRIBUTION:
S. TSENG

Approved for transmittal _____

CONSOL ENERGY INC.
RESEARCH & DEVELOPMENT
ANALYTICAL LABORATORY
4000 BROWNSVILLE ROAD, SOUTH PARK, PA 15129

DESCRIPTION *MILL REJECTS TEST 2*
PLANT NO. 10 *' UNIT 2*
DATE SAMPLED *09/01/04*
SAMPLE NUMBER 2

DATE LOGGED *09/17/04*
DATE COMPLETED *09/21/04*
PROJECT NUMBER *1621-87 -*
ANALYTICAL NUMBER 044884

ANALYSIS REPORT

PROXIMATE	(Dry)%
Ash	78.93
Volatile Matter	23.31
Fixed Carbon	-2.24
Sulfur, Total	18.17

MISC. (As Det.)	
Hg	1.44 PPM

ULTIMATE	(Dry)%
Carbon	11.29
Chlorine	0.009
Sulfur, Total	18.17
Ash	78.93

MAJOR ASH ELEM	%
Ignited at 75 C	
SiO2	15.98
Al2O3	4.61
TiO2	0.23
Fe2O3	34.09
CaO	16.14
MgO	2.02
Na2O	0.21
K2O	0.34
P2O5	0.08
SO3	19.37
UND	6.93

AS DETERMINED MOISTURE: 0.40 %

DISTRIBUTION:
S. TSENG

Approved for transmittal _____

CONSOL ENERGY INC.
RESEARCH & DEVELOPMENT
ANALYTICAL LABORATORY
4000 BROWNSVILLE ROAD, SOUTH PARK, PA 15129

DESCRIPTION *MILL REJECTS TEST 3*
UNIT 2
PLANT NO. 10
DATE SAMPLED *09/01/04*
SAMPLE NUMBER 3

DATE LOGGED *09/17/04*
DATE COMPLETED *09/21/04*
PROJECT NUMBER *1621-87 -*
ANALYTICAL NUMBER 044885

ANALYSIS REPORT

PROXIMATE	(Dry)%
Ash	85.72
Volatile Matter	18.55
Fixed Carbon	-4.27
Sulfur, Total	9.64

ULTIMATE	(Dry)%
Carbon	6.76
Chlorine	0.007
Sulfur, Total	9.64
Ash	85.72

MAJOR ASH ELEM	%
Ignited at 75 C	
SiO2	29.51
Al2O3	9.28
TiO2	0.45
Fe2O3	25.78
CaO	17.70
MgO	2.09
Na2O	0.36
K2O	0.61
P2O5	0.19
SO3	11.44
UND	2.59

AS DETERMINED MOISTURE: 0.75 %

DISTRIBUTION:
S. TSENG

Approved for transmittal _____

CONSOL ENERGY INC.
RESEARCH & DEVELOPMENT
ANALYTICAL LABORATORY
4000 BROWNSVILLE ROAD, SOUTH PARK, PA 15129

DESCRIPTION *MILL REJECTS TEST 4*
PLANT NO. 10 *UNIT 2*
DATE SAMPLED *09/02/04*
SAMPLE NUMBER 4

DATE LOGGED *09/17/04*
DATE COMPLETED *09/21/04*
PROJECT NUMBER *1621-87 -*
ANALYTICAL NUMBER **044886**

ANALYSIS REPORT

PROXIMATE	(Dry)%
Ash	67.04
Volatile Matter	19.39
Fixed Carbon	13.57
Sulfur, Total	13.94

MISC. (As Det.)	
Hg	0.797 PPM

ULTIMATE	(Dry)%
Carbon	19.84
Chlorine	0.018
Sulfur, Total	13.94
Ash	67.04

MAJOR ASH ELEM	%
Ignited at 75 C	
SiO2	38.36
Al2O3	10.00
TiO2	0.49
Fe2O3	41.53
CaO	3.92
MgO	0.88
Na2O	0.41
K2O	0.87
P2O5	0.13
SO3	4.19
UND	-0.78

AS DETERMINED MOISTURE: 0.99 %

DISTRIBUTION:
S. TSENG

Approved for transmittal _____

CONSOL ENERGY INC.
RESEARCH & DEVELOPMENT
ANALYTICAL LABORATORY
4000 BROWNSVILLE ROAD, SOUTH PARK, PA 15129

DESCRIPTION *BOTTOM ASH TEST 1*
PLANT NO. 10 *' UNIT 2*
DATE SAMPLED *08/31/04*
SAMPLE NUMBER 1

DATE LOGGED *09/10/04*
DATE COMPLETED *09/21/04*
PROJECT NUMBER *1621-87 -*
ANALYTICAL NUMBER 044634

ANALYSIS REPORT

PROXIMATE	(Dry)%
Ash	100.67
Total Sulfur	0.14

MISC. (As Det.)		
Hg	<0.004	PPM

ULTIMATE	(Dry)%
Carbon	0.13
Chlorine	34.~~003~~ PPM
Ash	100.67

MAJOR ASH ELEM	(Dry)%
SiO2	36.13
Al2O3	17.51
TiO2	0.79
Fe2O3	37.86
CaO	2.53
MgO	0.60
Na2O	0.33
K2O	1.10
P2O5	0.19
SO3	0.34
UND	2.62

AS DETERMINED MOISTURE: 0.01 %

DISTRIBUTION:
S. TSENG

Approved for transmittal _____

CONSOL ENERGY INC.
RESEARCH & DEVELOPMENT
ANALYTICAL LABORATORY
4000 BROWNSVILLE ROAD, SOUTH PARK, PA 15129

DESCRIPTION *BOTTOM ASH TEST 2*
PLANT NO. 10 *' UNIT 2*
DATE SAMPLED *09/01/04*
SAMPLE NUMBER 2

DATE LOGGED *09/10/04*
DATE COMPLETED *09/21/04*
PROJECT NUMBER *1621-87 -*
ANALYTICAL NUMBER 044635

ANALYSIS REPORT

PROXIMATE	(Dry)%
Ash	101.45
Total Sulfur	0.32

MISC. (As Det.)		
Hg	<0.004	PPM

ULTIMATE	(Dry)%
Carbon	0.03
Chlorine	8.~~001~~ ppm
Ash	101.45

MAJOR ASH ELEM	(Dry)%
SiO2	37.78
Al2O3	18.16
TiO2	0.83
Fe2O3	38.15
CaO	2.60
MgO	0.62
Na2O	0.32
K2O	1.15
P2O5	0.23
SO3	0.81
UND	-0.65

AS DETERMINED MOISTURE: 0.01 %

DISTRIBUTION:
S. TSENG

Approved for transmittal _____

CONSOL ENERGY INC.
RESEARCH & DEVELOPMENT
ANALYTICAL LABORATORY
4000 BROWNSVILLE ROAD, SOUTH PARK, PA 15129

DESCRIPTION *BOTTOM ASH TEST 3*
PLANT NO. 10 *UNIT 2*
DATE SAMPLED *09/01/04*
SAMPLE NUMBER 3

DATE LOGGED *09/10/04*
DATE COMPLETED *09/21/04*
PROJECT NUMBER *1621-87 -*
ANALYTICAL NUMBER **044636**

ANALYSIS REPORT

PROXIMATE	(Dry)%
Ash	100.76
Total Sulfur	0.12

MISC. (As Det.)		
Hg	<0.004	PPM

ULTIMATE	(Dry)%
Carbon	0.04
Chlorine	14.~~001~~ PPM
Ash	100.76

MAJOR ASH ELEM	(Dry)%
SiO2	41.14
Al2O3	19.76
TiO2	0.91
Fe2O3	33.60
CaO	2.77
MgO	0.68
Na2O	0.35
K2O	1.27
P2O5	0.25
SO3	0.29
UND	-1.02

AS DETERMINED MOISTURE: 0.01 %

DISTRIBUTION:
S. TSENG

Approved for transmittal _____

CONSOL ENERGY INC.
RESEARCH & DEVELOPMENT
ANALYTICAL LABORATORY
4000 BROWNSVILLE ROAD, SOUTH PARK, PA 15129

DESCRIPTION *BOTTOM ASH TEST 4*
PLANT NO. 10 *UNIT 2*
DATE SAMPLED *09/02/04*
SAMPLE NUMBER 4

DATE LOGGED *09/10/04*
DATE COMPLETED *09/21/04*
PROJECT NUMBER *1621-87*
ANALYTICAL NUMBER 044637

ANALYSIS REPORT

PROXIMATE	(Dry)%
Ash	100.49
Total Sulfur	0.04

MISC. (As Det.)		
Hg	<0.004	PPM

ULTIMATE	(Dry)%
Carbon	0.03
Chlorine	35.~~004~~ PPM
Ash	100.49

MAJOR ASH ELEM	(Dry)%
SiO2	41.31
Al2O3	19.84
TiO2	0.90
Fe2O3	32.45
CaO	2.74
MgO	0.68
Na2O	0.38
K2O	1.32
P2O5	0.23
SO3	0.11
UND	0.04

AS DETERMINED MOISTURE: 0.01 %

DISTRIBUTION:
S. TSENG

Approved for transmittal _____

CONSOL ENERGY INC.
RESEARCH & DEVELOPMENT
ANALYTICAL LABORATORY
4000 BROWNSVILLE ROAD, SOUTH PARK, PA 15129

DESCRIPTION *ESP HOPPER ASH HOPPER 11L*
TEST 1
DATE SAMPLED *08/31/04*
SAMPLE NUMBER *1-11L*

DATE LOGGED *09/10/04*
DATE COMPLETED *09/17/04*
PROJECT NUMBER *1621-87 -*
ANALYTICAL NUMBER 044650

ANALYSIS REPORT

PROXIMATE	(Dry)%
Ash	97.76
Total Sulfur	0.93

ULTIMATE	(Dry)%
Carbon	1.52
Ash	97.76

MAJOR ASH ELEM	(Dry)%
SiO2	42.87
Al2O3	20.61
TiO2	0.94
Fe2O3	25.29
CaO	2.82
MgO	0.79
Na2O	3.06
K2O	1.75
P2O5	0.32
SO3	2.33
UND	-0.78

MISC. (As Det.)

Hg 0.062 PPM

AS DETERMINED MOISTURE: 0.19 %

DISTRIBUTION:
S. TSENG

Approved for transmittal _____

CONSOL ENERGY INC.
RESEARCH & DEVELOPMENT
ANALYTICAL LABORATORY
4000 BROWNSVILLE ROAD, SOUTH PARK, PA 15129

DESCRIPTION *ESP HOPPER ASH HOPPER 15L*
TEST 1
DATE SAMPLED *08/31/04*
SAMPLE NUMBER *1-15L*

DATE LOGGED *09/10/04*
DATE COMPLETED *09/17/04*
PROJECT NUMBER *1621-87 -*
ANALYTICAL NUMBER 044651

ANALYSIS REPORT

PROXIMATE	(Dry)%
Ash	97.52
Total Sulfur	1.18

ULTIMATE	(Dry)%
Carbon	1.51
Ash	97.52

MAJOR ASH ELEM	(Dry)%
SiO2	43.01
Al2O3	20.64
TiO2	0.96
Fe2O3	24.22
CaO	2.84
MgO	0.77
Na2O	2.47
K2O	1.73
P2O5	0.35
SO3	2.95
UND	0.06

MISC. (As Det.)

Hg 0.039 PPM

AS DETERMINED MOISTURE: 0.18 %

DISTRIBUTION:
S. TSENG

Approved for transmittal _____

CONSOL ENERGY INC.
RESEARCH & DEVELOPMENT
ANALYTICAL LABORATORY
4000 BROWNSVILLE ROAD, SOUTH PARK, PA 15129

DESCRIPTION *ESP HOPPER ASH HOPPER 16L TEST 1*
DATE SAMPLED *08/31/04*
SAMPLE NUMBER *1-16L*

DATE LOGGED *09/10/04*
DATE COMPLETED *09/17/04*
PROJECT NUMBER *1621-87 -*
ANALYTICAL NUMBER 044652

ANALYSIS REPORT

PROXIMATE	(Dry)%
Ash	96.89
Total Sulfur	1.37

ULTIMATE	(Dry)%
Carbon	1.92
Ash	96.89

MAJOR ASH ELEM	(Dry)%
SiO2	42.60
Al2O3	20.69
TiO2	0.97
Fe2O3	22.90
CaO	2.88
MgO	0.75
Na2O	2.51
K2O	1.76
P2O5	0.40
SO3	3.42
UND	1.12

MISC. (As Det.)

Hg 0.066 PPM

AS DETERMINED MOISTURE: 0.14 %

DISTRIBUTION:
S. TSENG

Approved for transmittal _____

CONSOL ENERGY INC.
RESEARCH & DEVELOPMENT
ANALYTICAL LABORATORY
4000 BROWNSVILLE ROAD, SOUTH PARK, PA 15129

DESCRIPTION *ESP HOPPER ASH HOPPER 17L*
TEST 1
DATE SAMPLED *08/31/04*
SAMPLE NUMBER *1-17L*

DATE LOGGED *09/10/04*
DATE COMPLETED *09/17/04*
PROJECT NUMBER *1621-87 -*
ANALYTICAL NUMBER 044653

ANALYSIS REPORT

PROXIMATE	(Dry)%
Ash	95.75
Total Sulfur	1.60

ULTIMATE	(Dry)%
Carbon	1.48
Ash	95.75

MAJOR ASH ELEM	(Dry)%
SiO2	45.51
Al2O3	23.97
TiO2	1.18
Fe2O3	15.83
CaO	3.18
MgO	0.94
Na2O	1.39
K2O	2.24
P2O5	0.83
SO3	4.00
UND	0.93

MISC. (As Det.)

Hg 0.046 PPM

AS DETERMINED MOISTURE: 0.25 %

DISTRIBUTION:
S. TSENG

Approved for transmittal _____

CONSOL ENERGY INC.
RESEARCH & DEVELOPMENT
ANALYTICAL LABORATORY
4000 BROWNSVILLE ROAD, SOUTH PARK, PA 15129

DESCRIPTION *ESP HOPPER ASH HOPPER 21L*
TEST 1
DATE SAMPLED *08/31/04*
SAMPLE NUMBER *1-21L*

DATE LOGGED *09/10/04*
DATE COMPLETED *09/17/04*
PROJECT NUMBER *1621-87 -*
ANALYTICAL NUMBER 044654

ANALYSIS REPORT

PROXIMATE	(Dry)%
Ash	98.76
Total Sulfur	0.80

ULTIMATE	(Dry)%
Carbon	0.86
Ash	98.76

MAJOR ASH ELEM	(Dry)%
SiO2	42.96
Al2O3	20.31
TiO2	0.94
Fe2O3	26.09
CaO	2.89
MgO	0.81
Na2O	2.51
K2O	1.68
P2O5	0.31
SO3	2.01
UND	-0.51

MISC. (As Det.)

Hg 0.022 PPM

AS DETERMINED MOISTURE: 0.16 %

DISTRIBUTION:
S. TSENG

Approved for transmittal _____

CONSOL ENERGY INC.
RESEARCH & DEVELOPMENT
ANALYTICAL LABORATORY
4000 BROWNSVILLE ROAD, SOUTH PARK, PA 15129

DESCRIPTION *ESP HOPPER ASH HOPPER 25L*
TEST 1
DATE SAMPLED *08/31/04*
SAMPLE NUMBER *1-25L*

DATE LOGGED *09/10/04*
DATE COMPLETED *09/17/04*
PROJECT NUMBER *1621-87*
ANALYTICAL NUMBER **044655**

ANALYSIS REPORT

PROXIMATE	(Dry)%
Ash	98.50
Total Sulfur	1.10

ULTIMATE	(Dry)%
Carbon	1.02
Ash	98.50

MAJOR ASH ELEM	(Dry)%
SiO2	44.02
Al2O3	21.04
TiO2	0.98
Fe2O3	23.64
CaO	2.82
MgO	0.77
Na2O	2.85
K2O	1.78
P2O5	0.34
SO3	2.76
UND	-1.00

MISC. (As Det.)

Hg 0.020 PPM

AS DETERMINED MOISTURE: 0.11 %

DISTRIBUTION:
S. TSENG

Approved for transmittal _____

CONSOL ENERGY INC.
RESEARCH & DEVELOPMENT
ANALYTICAL LABORATORY
4000 BROWNSVILLE ROAD, SOUTH PARK, PA 15129

DESCRIPTION *ESP HOPPER ASH HOPPER 31L*
TEST 1
DATE SAMPLED *08/31/04*
SAMPLE NUMBER *1-31L*

DATE LOGGED *09/10/04*
DATE COMPLETED *09/17/04*
PROJECT NUMBER *1621-87 -*
ANALYTICAL NUMBER **044656**

ANALYSIS REPORT

PROXIMATE	(Dry)%
Ash	98.22
Total Sulfur	1.30

MISC. (As Det.)	
Hg	0.041 PPM

ULTIMATE	(Dry)%
Carbon	1.17
Ash	98.22

MAJOR ASH ELEM	(Dry)%
SiO2	38.99
Al2O3	18.65
TiO2	0.87
Fe2O3	27.85
CaO	2.64
MgO	3.81
Na2O	2.93
K2O	1.54
P2O5	0.17
SO3	3.25
UND	-0.70

AS DETERMINED MOISTURE: 0.62 %

DISTRIBUTION:
S. TSENG

Approved for transmittal _____

CONSOL ENERGY INC.
RESEARCH & DEVELOPMENT
ANALYTICAL LABORATORY
4000 BROWNSVILLE ROAD, SOUTH PARK, PA 15129

DESCRIPTION *ESP HOPPER ASH HOPPER 32L TEST 1*
DATE SAMPLED *08/31/04*
SAMPLE NUMBER *1-32L*

DATE LOGGED *09/10/04*
DATE COMPLETED *09/17/04*
PROJECT NUMBER *1621-87 -*
ANALYTICAL NUMBER 044657

ANALYSIS REPORT

PROXIMATE	(Dry)%
Ash	96.92
Total Sulfur	1.24

ULTIMATE	(Dry)%
Carbon	1.66
Ash	96.92

MAJOR ASH ELEM	(Dry)%
SiO2	42.97
Al2O3	21.25
TiO2	0.99
Fe2O3	21.55
CaO	3.62
MgO	1.85
Na2O	1.84
K2O	1.89
P2O5	0.45
SO3	3.11
UND	0.48

MISC. (As Det.)

Hg 0.044 PPM

AS DETERMINED MOISTURE: 1.02 %

DISTRIBUTION:
S. TSENG

Approved for transmittal _____

CONSOL ENERGY INC.
RESEARCH & DEVELOPMENT
ANALYTICAL LABORATORY
4000 BROWNSVILLE ROAD, SOUTH PARK, PA 15129

DESCRIPTION *ESP HOPPER ASH HOPPER 35L*
TEST 1
DATE SAMPLED *08/31/04*
SAMPLE NUMBER *1-35L*

DATE LOGGED *09/10/04*
DATE COMPLETED *09/17/04*
PROJECT NUMBER *1621-87 -*
ANALYTICAL NUMBER 044658

ANALYSIS REPORT

PROXIMATE	(Dry)%
Ash	97.03
Total Sulfur	0.77

MISC. (As Det.)	
Hg	0.069 PPM

ULTIMATE	(Dry)%
Carbon	1.45
Ash	97.03

MAJOR ASH ELEM	(Dry)%
SiO2	39.86
Al2O3	19.42
TiO2	0.90
Fe2O3	26.94
CaO	4.82
MgO	2.65
Na2O	0.47
K2O	1.64
P2O5	0.28
SO3	1.92
UND	1.10

AS DETERMINED MOISTURE: 0.80 %

DISTRIBUTION:
S. TSENG

Approved for transmittal _____

CONSOL ENERGY INC.
RESEARCH & DEVELOPMENT
ANALYTICAL LABORATORY
4000 BROWNSVILLE ROAD, SOUTH PARK, PA 15129

DESCRIPTION *ESP HOPPER ASH HOPPER 12U TEST 1*
DATE SAMPLED *08/31/04*
SAMPLE NUMBER *1-12U*

DATE LOGGED *09/10/04*
DATE COMPLETED *09/17/04*
PROJECT NUMBER *1621-87 -*
ANALYTICAL NUMBER 044659

ANALYSIS REPORT

PROXIMATE	(Dry)%
Ash	95.97
Total Sulfur	1.15

MISC. (As Det.)	
Hg	0.204 PPM

ULTIMATE	(Dry)%
Carbon	2.65
Ash	95.97

MAJOR ASH ELEM	(Dry)%
SiO2	45.62
Al2O3	22.38
TiO2	1.05
Fe2O3	18.14
CaO	2.89
MgO	0.81
Na2O	2.20
K2O	1.95
P2O5	0.47
SO3	2.88
UND	1.61

AS DETERMINED MOISTURE: 0.33 %

DISTRIBUTION:
S. TSENG

Approved for transmittal _____

CONSOL ENERGY INC.
RESEARCH & DEVELOPMENT
ANALYTICAL LABORATORY
4000 BROWNSVILLE ROAD, SOUTH PARK, PA 15129

DESCRIPTION *ESP HOPPER ASH HOPPER 15U*
TEST 1
DATE SAMPLED *08/31/04*
SAMPLE NUMBER *1-15U*

DATE LOGGED *09/10/04*
DATE COMPLETED *09/17/04*
PROJECT NUMBER *1621-87*
ANALYTICAL NUMBER 044660

ANALYSIS REPORT

PROXIMATE	(Dry)%
Ash	97.68
Total Sulfur	1.00

ULTIMATE	(Dry)%
Carbon	1.66
Ash	97.68

MAJOR ASH ELEM	(Dry)%
SiO2	44.95
Al2O3	21.75
TiO2	1.02
Fe2O3	21.26
CaO	2.90
MgO	0.89
Na2O	2.16
K2O	1.89
P2O5	0.40
SO3	2.50
UND	0.28

MISC. (As Det.)

Hg 0.078 PPM

AS DETERMINED MOISTURE: 0.13 %

DISTRIBUTION:
S. TSENG

Approved for transmittal _____

CONSOL ENERGY INC.
RESEARCH & DEVELOPMENT
ANALYTICAL LABORATORY
4000 BROWNSVILLE ROAD, SOUTH PARK, PA 15129

DESCRIPTION *ESP HOPPER ASH HOPPER 21U*
TEST 1
DATE SAMPLED *08/31/04*
SAMPLE NUMBER *1-21U*

DATE LOGGED *09/10/04*
DATE COMPLETED *09/17/04*
PROJECT NUMBER *1621-87 -*
ANALYTICAL NUMBER 044661

ANALYSIS REPORT

PROXIMATE	(Dry)%
Ash	98.66
Total Sulfur	0.83

ULTIMATE	(Dry)%
Carbon	0.96
Ash	98.66

MAJOR ASH ELEM	(Dry)%
SiO2	44.66
Al2O3	21.31
TiO2	1.00
Fe2O3	23.49
CaO	2.95
MgO	0.77
Na2O	2.13
K2O	1.76
P2O5	0.36
SO3	2.08
UND	-0.51

MISC. (As Det.)

Hg 0.037 PPM

AS DETERMINED MOISTURE: 0.03 %

DISTRIBUTION:
S. TSENG

Approved for transmittal _____

CONSOL ENERGY INC.
RESEARCH & DEVELOPMENT
ANALYTICAL LABORATORY
4000 BROWNSVILLE ROAD, SOUTH PARK, PA 15129

DESCRIPTION *ESP HOPPER ASH HOPPER 25U TEST 1*
DATE SAMPLED *08/31/04*
SAMPLE NUMBER *1-25U*

DATE LOGGED *09/10/04*
DATE COMPLETED *09/17/04*
PROJECT NUMBER *1621-87 -*
ANALYTICAL NUMBER 044662

ANALYSIS REPORT

PROXIMATE	(Dry)%
Ash	98.25
Total Sulfur	1.20

ULTIMATE	(Dry)%
Carbon	1.14
Ash	98.25

MAJOR ASH ELEM	(Dry)%
SiO2	44.25
Al2O3	21.35
TiO2	1.00
Fe2O3	22.05
CaO	2.89
MgO	0.78
Na2O	3.04
K2O	1.84
P2O5	0.39
SO3	2.99
UND	-0.58

MISC. (As Det.)

Hg 0.025 PPM

AS DETERMINED MOISTURE: 0.15 %

DISTRIBUTION:
S. TSENG

Approved for transmittal _____

CONSOL ENERGY INC.
RESEARCH & DEVELOPMENT
ANALYTICAL LABORATORY
4000 BROWNSVILLE ROAD, SOUTH PARK, PA 15129

DESCRIPTION *ESP HOPPER ASH HOPPER 26U*
TEST 1
DATE SAMPLED *08/31/04*
SAMPLE NUMBER *1-26U*

DATE LOGGED *09/10/04*
DATE COMPLETED *09/17/04*
PROJECT NUMBER *1621-87 -*
ANALYTICAL NUMBER 044663

ANALYSIS REPORT

PROXIMATE	(Dry)%
Ash	98.28
Total Sulfur	1.30

ULTIMATE	(Dry)%
Carbon	0.86
Ash	98.28

MAJOR ASH ELEM	(Dry)%
SiO2	41.91
Al2O3	20.25
TiO2	0.96
Fe2O3	25.31
CaO	2.93
MgO	0.74
Na2O	2.42
K2O	1.68
P2O5	0.36
SO3	3.26
UND	0.18

MISC. (As Det.)	
Hg	0.025 PPM

AS DETERMINED MOISTURE: 0.10 %

DISTRIBUTION:
S. TSENG

Approved for transmittal _____

CONSOL ENERGY INC.
RESEARCH & DEVELOPMENT
ANALYTICAL LABORATORY
4000 BROWNSVILLE ROAD, SOUTH PARK, PA 15129

DESCRIPTION *ESP HOPPER ASH HOPPER 31U*
TEST 1
DATE SAMPLED *08/31/04*
SAMPLE NUMBER *1-31U*

DATE LOGGED *09/10/04*
DATE COMPLETED *09/17/04*
PROJECT NUMBER *1621-87 -*
ANALYTICAL NUMBER 044664

ANALYSIS REPORT

PROXIMATE	(Dry)%
Ash	98.28
Total Sulfur	0.90

MISC. (As Det.)	
Hg	0.056 PPM

ULTIMATE	(Dry)%
Carbon	1.31
Ash	98.28

MAJOR ASH ELEM	(Dry)%
SiO2	45.75
Al2O3	21.89
TiO2	1.02
Fe2O3	21.85
CaO	2.89
MgO	0.78
Na2O	2.36
K2O	1.88
P2O5	0.37
SO3	2.25
UND	-1.04

AS DETERMINED MOISTURE: 0.15 %

DISTRIBUTION:
S. TSENG

Approved for transmittal _____

CONSOL ENERGY INC.
RESEARCH & DEVELOPMENT
ANALYTICAL LABORATORY
4000 BROWNSVILLE ROAD, SOUTH PARK, PA 15129

DESCRIPTION *ESP HOPPER ASH HOPPER 11L TEST 2*
DATE SAMPLED *09/01/04*
SAMPLE NUMBER *2-11L*

DATE LOGGED *09/10/04*
DATE COMPLETED *09/17/04*
PROJECT NUMBER *1621-87 -*
ANALYTICAL NUMBER 044665

ANALYSIS REPORT

PROXIMATE	(Dry)%
Ash	97.91
Total Sulfur	0.83

MISC. (As Det.)	
Hg	0.081 PPM

ULTIMATE	(Dry)%
Carbon	1.82
Ash	97.91

MAJOR ASH ELEM	(Dry)%
SiO2	44.35
Al2O3	21.24
TiO2	0.97
Fe2O3	24.69
CaO	2.76
MgO	0.75
Na2O	2.38
K2O	1.81
P2O5	0.28
SO3	2.08
UND	-1.31

AS DETERMINED MOISTURE: 0.13 %

DISTRIBUTION:
S. TSENG

Approved for transmittal _____

CONSOL ENERGY INC.
RESEARCH & DEVELOPMENT
ANALYTICAL LABORATORY
4000 BROWNSVILLE ROAD, SOUTH PARK, PA 15129

DESCRIPTION *ESP HOPPER ASH HOPPER 15L TEST 2*
DATE SAMPLED *09/01/04*
SAMPLE NUMBER *2-15L*

DATE LOGGED *09/10/04*
DATE COMPLETED *09/17/04*
PROJECT NUMBER *1621-87 -*
ANALYTICAL NUMBER **044666**

ANALYSIS REPORT

PROXIMATE	(Dry)%
Ash	98.20
Total Sulfur	0.86

MISC. (As Det.)	
Hg	0.035 PPM

ULTIMATE	(Dry)%
Carbon	1.32
Ash	98.20

MAJOR ASH ELEM	(Dry)%
SiO2	43.03
Al2O3	20.36
TiO2	0.96
Fe2O3	27.09
CaO	2.84
MgO	0.72
Na2O	1.82
K2O	1.64
P2O5	0.28
SO3	2.15
UND	-0.89

AS DETERMINED MOISTURE: 0.15 %

DISTRIBUTION:
S. TSENG

Approved for transmittal _____

CONSOL ENERGY INC.
RESEARCH & DEVELOPMENT
ANALYTICAL LABORATORY
4000 BROWNSVILLE ROAD, SOUTH PARK, PA 15129

DESCRIPTION *ESP HOPPER ASH HOPPER 16L TEST 2*
DATE SAMPLED *09/01/04*
SAMPLE NUMBER *2-16L*

DATE LOGGED *09/10/04*
DATE COMPLETED *09/17/04*
PROJECT NUMBER *1621-87 -*
ANALYTICAL NUMBER 044667

ANALYSIS REPORT

PROXIMATE	(Dry)%
Ash	97.18
Total Sulfur	1.13

ULTIMATE	(Dry)%
Carbon	1.73
Ash	97.18

MAJOR ASH ELEM	(Dry)%
SiO2	42.91
Al2O3	20.61
TiO2	0.97
Fe2O3	25.20
CaO	2.80
MgO	0.75
Na2O	2.10
K2O	1.72
P2O5	0.34
SO3	2.82
UND	-0.22

MISC. (As Det.)

Hg 0.065 PPM

AS DETERMINED MOISTURE: 0.15 %

DISTRIBUTION:
S. TSENG

Approved for transmittal _____

CONSOL ENERGY INC.
RESEARCH & DEVELOPMENT
ANALYTICAL LABORATORY
4000 BROWNSVILLE ROAD, SOUTH PARK, PA 15129

DESCRIPTION *ESP HOPPER ASH HOPPER 17L TEST 2*
DATE SAMPLED *09/01/04*
SAMPLE NUMBER *2-17L*

DATE LOGGED *09/10/04*
DATE COMPLETED *09/17/04*
PROJECT NUMBER *1621-87 -*
ANALYTICAL NUMBER **044668**

ANALYSIS REPORT

PROXIMATE	(Dry)%
Ash	95.68
Total Sulfur	1.67

ULTIMATE	(Dry)%
Carbon	1.32
Ash	95.68

MAJOR ASH ELEM	(Dry)%
SiO2	45.34
Al2O3	23.62
TiO2	1.19
Fe2O3	16.14
CaO	3.13
MgO	0.93
Na2O	1.28
K2O	2.14
P2O5	0.85
SO3	4.17
UND	1.21

MISC. (As Det.)	
Hg	0.036 PPM

AS DETERMINED MOISTURE: 0.29 %

DISTRIBUTION:
S. TSENG

Approved for transmittal _____

CONSOL ENERGY INC.
RESEARCH & DEVELOPMENT
ANALYTICAL LABORATORY
4000 BROWNSVILLE ROAD, SOUTH PARK, PA 15129

DESCRIPTION *ESP HOPPER ASH HOPPER 21L*
TEST 2
DATE SAMPLED *09/01/04*
SAMPLE NUMBER *2-21L*

DATE LOGGED *09/10/04*
DATE COMPLETED *09/17/04*
PROJECT NUMBER *1621-87 -*
ANALYTICAL NUMBER **044669**

ANALYSIS REPORT

PROXIMATE	(Dry)%
Ash	98.99
Total Sulfur	0.77

ULTIMATE	(Dry)%
Carbon	0.76
Ash	98.99

MAJOR ASH ELEM	(Dry)%
SiO2	43.90
Al2O3	20.92
TiO2	0.97
Fe2O3	25.66
CaO	2.81
MgO	0.74
Na2O	2.10
K2O	1.78
P2O5	0.28
SO3	1.93
UND	-1.09

MISC. (As Det.)

Hg 0.020 PPM

AS DETERMINED MOISTURE: 0.01 %

DISTRIBUTION:
S. TSENG

Approved for transmittal _____

CONSOL ENERGY INC.
RESEARCH & DEVELOPMENT
ANALYTICAL LABORATORY
4000 BROWNSVILLE ROAD, SOUTH PARK, PA 15129

DESCRIPTION *ESP HOPPER ASH HOPPER 25L TEST 2*
DATE SAMPLED *09/01/04*
SAMPLE NUMBER *2-25L*

DATE LOGGED *09/10/04*
DATE COMPLETED *09/17/04*
PROJECT NUMBER *1621-87*
ANALYTICAL NUMBER **044670**

ANALYSIS REPORT

PROXIMATE	(Dry)%
Ash	98.74
Total Sulfur	0.98

ULTIMATE	(Dry)%
Carbon	0.84
Ash	98.74

MAJOR ASH ELEM	(Dry)%
SiO2	43.39
Al2O3	20.70
TiO2	0.97
Fe2O3	25.38
CaO	2.81
MgO	0.74
Na2O	2.30
K2O	1.74
P2O5	0.32
SO3	2.45
UND	-0.80

MISC. (As Det.)	
Hg	0.017 PPM

AS DETERMINED MOISTURE: 0.01 %

DISTRIBUTION:
S. TSENG

Approved for transmittal _____

CONSOL ENERGY INC.
RESEARCH & DEVELOPMENT
ANALYTICAL LABORATORY
4000 BROWNSVILLE ROAD, SOUTH PARK, PA 15129

DESCRIPTION *ESP HOPPER ASH HOPPER 31L*
TEST 2
DATE SAMPLED *09/01/04*
SAMPLE NUMBER *2-31L*

DATE LOGGED *09/10/04*
DATE COMPLETED *09/17/04*
PROJECT NUMBER *1621-87 -*
ANALYTICAL NUMBER 044671

ANALYSIS REPORT

PROXIMATE	(Dry)%
Ash	98.49
Total Sulfur	0.82

ULTIMATE	(Dry)%
Carbon	1.30
Ash	98.49

MAJOR ASH ELEM	(Dry)%
SiO2	44.00
Al2O3	20.99
TiO2	0.99
Fe2O3	25.29
CaO	2.86
MgO	0.77
Na2O	2.04
K2O	1.73
P2O5	0.31
SO3	2.06
UND	-1.04

MISC. (As Det.)	
Hg	0.033 PPM

AS DETERMINED MOISTURE: 0.01 %

DISTRIBUTION:
S. TSENG

Approved for transmittal _____

CONSOL ENERGY INC.
RESEARCH & DEVELOPMENT
ANALYTICAL LABORATORY
4000 BROWNSVILLE ROAD, SOUTH PARK, PA 15129

DESCRIPTION *ESP HOPPER ASH HOPPER 32L TEST 2*
DATE SAMPLED *09/01/04*
SAMPLE NUMBER *2-32L*

DATE LOGGED *09/10/04*
DATE COMPLETED *09/17/04*
PROJECT NUMBER *1621-87 -*
ANALYTICAL NUMBER **044672**

ANALYSIS REPORT

PROXIMATE	(Dry)%
Ash	97.24
Total Sulfur	1.03

ULTIMATE	(Dry)%
Carbon	1.78
Ash	97.24

MAJOR ASH ELEM	(Dry)%
SiO2	44.72
Al2O3	21.76
TiO2	1.02
Fe2O3	22.72
CaO	2.80
MgO	0.78
Na2O	1.87
K2O	1.88
P2O5	0.40
SO3	2.57
UND	-0.52

MISC. (As Det.)

Hg 0.058 PPM

AS DETERMINED MOISTURE: 0.07 %

DISTRIBUTION:
S. TSENG

Approved for transmittal _____

CONSOL ENERGY INC.
RESEARCH & DEVELOPMENT
ANALYTICAL LABORATORY
4000 BROWNSVILLE ROAD, SOUTH PARK, PA 15129

DESCRIPTION *ESP HOPPER ASH HOPPER 35L*
TEST 2
DATE SAMPLED *09/01/04*
SAMPLE NUMBER *2-35L*

DATE LOGGED *09/10/04*
DATE COMPLETED *09/17/04*
PROJECT NUMBER *1621-87*
ANALYTICAL NUMBER 044673

ANALYSIS REPORT

PROXIMATE	(Dry)%
Ash	98.43
Total Sulfur	0.67

ULTIMATE	(Dry)%
Carbon	1.30
Ash	98.43

MAJOR ASH ELEM	(Dry)%
SiO2	43.68
Al2O3	20.87
TiO2	0.96
Fe2O3	26.12
CaO	2.76
MgO	0.77
Na2O	2.03
K2O	1.80
P2O5	0.28
SO3	1.67
UND	-0.94

MISC. (As Det.)

Hg 0.058 PPM

AS DETERMINED MOISTURE: 0.04 %

DISTRIBUTION:
S. TSENG

Approved for transmittal _____

CONSOL ENERGY INC.
RESEARCH & DEVELOPMENT
ANALYTICAL LABORATORY
4000 BROWNSVILLE ROAD, SOUTH PARK, PA 15129

DESCRIPTION *ESP HOPPER ASH HOPPER 12U TEST 2*
DATE SAMPLED *09/01/04*
SAMPLE NUMBER *2-12U*

DATE LOGGED *09/10/04*
DATE COMPLETED *09/21/04*
PROJECT NUMBER *1621-87 -*
ANALYTICAL NUMBER 044674

ANALYSIS REPORT

PROXIMATE	(Dry)%
Ash	96.03
Total Sulfur	1.10

ULTIMATE	(Dry)%
Carbon	2.72
Ash	96.03

MAJOR ASH ELEM	(Dry)%
SiO2	43.95
Al2O3	22.30
TiO2	1.04
Fe2O3	20.43
CaO	2.94
MgO	0.81
Na2O	2.06
K2O	1.74
P2O5	0.45
SO3	2.75
UND	1.53

MISC. (As Det.)

Hg 0.226 PPM

AS DETERMINED MOISTURE: 0.23 %

DISTRIBUTION:
S. TSENG

Approved for transmittal _____

CONSOL ENERGY INC.
RESEARCH & DEVELOPMENT
ANALYTICAL LABORATORY
4000 BROWNSVILLE ROAD, SOUTH PARK, PA 15129

DESCRIPTION *ESP HOPPER ASH HOPPER 15U TEST 2*
DATE SAMPLED *09/01/04*
SAMPLE NUMBER *2-15U*

DATE LOGGED *09/10/04*
DATE COMPLETED *09/21/04*
PROJECT NUMBER *1621-87 -*
ANALYTICAL NUMBER 044675

ANALYSIS REPORT

PROXIMATE	(Dry)%
Ash	97.39
Total Sulfur	0.87

MISC. (As Det.)	
Hg	0.078 PPM

ULTIMATE	(Dry)%
Carbon	1.92
Ash	97.39

MAJOR ASH ELEM	(Dry)%
SiO2	44.14
Al2O3	21.80
TiO2	1.01
Fe2O3	22.78
CaO	2.85
MgO	0.80
Na2O	1.61
K2O	1.63
P2O5	0.37
SO3	2.17
UND	0.84

AS DETERMINED MOISTURE: 0.03 %

DISTRIBUTION:
S. TSENG

Approved for transmittal _____

CONSOL ENERGY INC.
RESEARCH & DEVELOPMENT
ANALYTICAL LABORATORY
4000 BROWNSVILLE ROAD, SOUTH PARK, PA 15129

DESCRIPTION *ESP HOPPER ASH HOPPER 21U*
TEST 2
DATE SAMPLED *09/01/04*
SAMPLE NUMBER *2-21U*

DATE LOGGED *09/10/04*
DATE COMPLETED *09/21/04*
PROJECT NUMBER *1621-87 -*
ANALYTICAL NUMBER **044676**

ANALYSIS REPORT

PROXIMATE	(Dry)%
Ash	98.77
Total Sulfur	0.77

ULTIMATE	(Dry)%
Carbon	0.94
Ash	98.77

MAJOR ASH ELEM	(Dry)%
SiO2	43.47
Al2O3	21.28
TiO2	0.99
Fe2O3	25.96
CaO	2.85
MgO	0.74
Na2O	1.72
K2O	1.60
P2O5	0.34
SO3	1.93
UND	-0.88

MISC. (As Det.)	
Hg	0.029 PPM

AS DETERMINED MOISTURE: 0.01 %

DISTRIBUTION:
S. TSENG

Approved for transmittal _____

CONSOL ENERGY INC.
RESEARCH & DEVELOPMENT
ANALYTICAL LABORATORY
4000 BROWNSVILLE ROAD, SOUTH PARK, PA 15129

DESCRIPTION *ESP HOPPER ASH HOPPER 25U TEST 2*
DATE SAMPLED *09/01/04*
SAMPLE NUMBER *2-25U*

DATE LOGGED *09/10/04*
DATE COMPLETED *09/21/04*
PROJECT NUMBER *1621-87 -*
ANALYTICAL NUMBER 044677

ANALYSIS REPORT

PROXIMATE	(Dry)%
Ash	98.31
Total Sulfur	1.08

MISC. (As Det.)	
Hg	0.022 PPM

ULTIMATE	(Dry)%
Carbon	0.94
Ash	98.31

MAJOR ASH ELEM	(Dry)%
SiO2	43.84
Al2O3	21.60
TiO2	1.01
Fe2O3	23.70
CaO	2.85
MgO	0.78
Na2O	2.04
K2O	1.61
P2O5	0.37
SO3	2.70
UND	-0.50

AS DETERMINED MOISTURE: 0.08 %

DISTRIBUTION:
S. TSENG

Approved for transmittal _____

CONSOL ENERGY INC.
RESEARCH & DEVELOPMENT
ANALYTICAL LABORATORY
4000 BROWNSVILLE ROAD, SOUTH PARK, PA 15129

DESCRIPTION *ESP HOPPER ASH HOPPER 26U TEST 2*
DATE SAMPLED *09/01/04*
SAMPLE NUMBER *2-26U*

DATE LOGGED *09/10/04*
DATE COMPLETED *09/21/04*
PROJECT NUMBER *1621-87 -*
ANALYTICAL NUMBER 044678

ANALYSIS REPORT

PROXIMATE	(Dry)%
Ash	98.55
Total Sulfur	1.25

MISC. (As Det.)	
Hg	0.023 PPM

ULTIMATE	(Dry)%
Carbon	0.87
Ash	98.55

MAJOR ASH ELEM	(Dry)%
SiO2	36.77
Al2O3	18.15
TiO2	0.84
Fe2O3	34.43
CaO	2.83
MgO	0.65
Na2O	2.14
K2O	1.22
P2O5	0.24
SO3	3.12
UND	-0.39

AS DETERMINED MOISTURE: 0.06 %

DISTRIBUTION:
S. TSENG

Approved for transmittal _____

CONSOL ENERGY INC.
RESEARCH & DEVELOPMENT
ANALYTICAL LABORATORY
4000 BROWNSVILLE ROAD, SOUTH PARK, PA 15129

DESCRIPTION *ESP HOPPER ASH HOPPER 31U*
TEST 2
DATE SAMPLED *09/01/04*
SAMPLE NUMBER *2-31U*

DATE LOGGED *09/10/04*
DATE COMPLETED *09/21/04*
PROJECT NUMBER *1621-87 -*
ANALYTICAL NUMBER **044679**

ANALYSIS REPORT

PROXIMATE	(Dry)%
Ash	98.34
Total Sulfur	0.80

ULTIMATE	(Dry)%
Carbon	1.19
Ash	98.34

MAJOR ASH ELEM	(Dry)%
SiO2	43.66
Al2O3	21.44
TiO2	0.99
Fe2O3	25.05
CaO	2.84
MgO	0.75
Na2O	1.60
K2O	1.58
P2O5	0.34
SO3	2.01
UND	-0.26

MISC. (As Det.)

Hg 0.054 PPM

AS DETERMINED MOISTURE: 0.04 %

DISTRIBUTION:
S. TSENG

Approved for transmittal _____

CONSOL ENERGY INC.
RESEARCH & DEVELOPMENT
ANALYTICAL LABORATORY
4000 BROWNSVILLE ROAD, SOUTH PARK, PA 15129

DESCRIPTION *ESP HOPPER ASH HOPPER 11L TEST 3*
DATE SAMPLED *09/01/04*
SAMPLE NUMBER *3-11L*

DATE LOGGED *09/10/04*
DATE COMPLETED *09/21/04*
PROJECT NUMBER *1621-87 -*
ANALYTICAL NUMBER **044680**

ANALYSIS REPORT

PROXIMATE	(Dry)%
Ash	98.14
Total Sulfur	0.84

ULTIMATE	(Dry)%
Carbon	1.59
Ash	98.14

MAJOR ASH ELEM	(Dry)%
SiO2	42.44
Al2O3	20.61
TiO2	0.95
Fe2O3	25.77
CaO	2.79
MgO	0.73
Na2O	2.18
K2O	1.50
P2O5	0.30
SO3	2.10
UND	0.63

MISC. (As Det.)	
Hg	0.083 PPM

AS DETERMINED MOISTURE: 0.13 %

DISTRIBUTION:
S. TSENG

Approved for transmittal _____

CONSOL ENERGY INC.
RESEARCH & DEVELOPMENT
ANALYTICAL LABORATORY
4000 BROWNSVILLE ROAD, SOUTH PARK, PA 15129

DESCRIPTION *ESP HOPPER ASH HOPPER 15L TEST 3*
DATE SAMPLED *09/01/04*
SAMPLE NUMBER *3-15L*

DATE LOGGED *09/10/04*
DATE COMPLETED *09/21/04*
PROJECT NUMBER *1621-87 -*
ANALYTICAL NUMBER 044681

ANALYSIS REPORT

PROXIMATE	(Dry)%
Ash	98.39
Total Sulfur	0.85

ULTIMATE	(Dry)%
Carbon	1.28
Ash	98.39

MAJOR ASH ELEM	(Dry)%
SiO_2	41.73
Al_2O_3	20.37
TiO_2	0.95
Fe_2O_3	27.17
CaO	2.74
MgO	0.72
Na_2O	1.90
K_2O	1.50
P_2O_5	0.30
SO_3	2.13
UND	0.49

MISC. (As Det.)

Hg 0.034 PPM

AS DETERMINED MOISTURE: 0.06 %

DISTRIBUTION:
S. TSENG

Approved for transmittal _____

CONSOL ENERGY INC.
RESEARCH & DEVELOPMENT
ANALYTICAL LABORATORY
4000 BROWNSVILLE ROAD, SOUTH PARK, PA 15129

DESCRIPTION *ESP HOPPER ASH HOPPER 16L TEST 3*
DATE SAMPLED *09/01/04*
SAMPLE NUMBER *3-16L*

DATE LOGGED *09/10/04*
DATE COMPLETED *09/28/04*
PROJECT NUMBER *1621-87 -*
ANALYTICAL NUMBER **044682**

ANALYSIS REPORT

PROXIMATE	(Dry)%
Ash	97.40
Total Sulfur	1.21

MISC. (As Det.)	
Hg	0.058 PPM

ULTIMATE	(Dry)%
Carbon	1.60
Ash	97.40

MAJOR ASH ELEM	(Dry)%
SiO2	41.67
Al2O3	20.31
TiO2	0.96
Fe2O3	24.49
CaO	2.81
MgO	0.73
Na2O	2.25
K2O	1.76
P2O5	0.37
SO3	3.03
UND	1.62

AS DETERMINED MOISTURE: 0.04 %

DISTRIBUTION:
S. TSENG

Approved for transmittal _____

CONSOL ENERGY INC.
RESEARCH & DEVELOPMENT
ANALYTICAL LABORATORY
4000 BROWNSVILLE ROAD, SOUTH PARK, PA 15129

DESCRIPTION *ESP HOPPER ASH HOPPER 17L*
TEST 3
DATE SAMPLED *09/01/04*
SAMPLE NUMBER *3-17L*

DATE LOGGED *09/10/04*
DATE COMPLETED *09/28/04*
PROJECT NUMBER *1621-87 -*
ANALYTICAL NUMBER 044683

ANALYSIS REPORT

PROXIMATE	(Dry)%
Ash	95.22
Total Sulfur	1.74

ULTIMATE	(Dry)%
Carbon	1.33
Ash	95.22

MAJOR ASH ELEM	(Dry)%
SiO2	44.44
Al2O3	23.54
TiO2	1.18
Fe2O3	16.13
CaO	3.06
MgO	0.90
Na2O	1.46
K2O	2.37
P2O5	0.82
SO3	4.34
UND	1.76

MISC. (As Det.)	
Hg	0.034 PPM

AS DETERMINED MOISTURE: 0.53 %

DISTRIBUTION:
S. TSENG

Approved for transmittal _____

CONSOL ENERGY INC.
RESEARCH & DEVELOPMENT
ANALYTICAL LABORATORY
4000 BROWNSVILLE ROAD, SOUTH PARK, PA 15129

DESCRIPTION *ESP HOPPER ASH HOPPER 21L TEST 3*
DATE SAMPLED *09/01/04*
SAMPLE NUMBER *3-21L*

DATE LOGGED *09/10/04*
DATE COMPLETED *09/28/04*
PROJECT NUMBER *1621-87 -*
ANALYTICAL NUMBER 044684

ANALYSIS REPORT

PROXIMATE	(Dry)%
Ash	99.07
Total Sulfur	0.82

MISC. (As Det.)	
Hg	0.018 PPM

ULTIMATE	(Dry)%
Carbon	0.67
Ash	99.07

MAJOR ASH ELEM	(Dry)%
SiO2	42.80
Al2O3	20.48
TiO2	0.95
Fe2O3	25.85
CaO	2.78
MgO	0.72
Na2O	2.22
K2O	1.77
P2O5	0.29
SO3	2.05
UND	0.09

AS DETERMINED MOISTURE: 0.06 %

DISTRIBUTION:
S. TSENG

Approved for transmittal _____

CONSOL ENERGY INC.
RESEARCH & DEVELOPMENT
ANALYTICAL LABORATORY
4000 BROWNSVILLE ROAD, SOUTH PARK, PA 15129

DESCRIPTION *ESP HOPPER ASH HOPPER 25L*
TEST 3
DATE SAMPLED *09/01/04*
SAMPLE NUMBER *3-25L*

DATE LOGGED *09/10/04*
DATE COMPLETED *09/28/04*
PROJECT NUMBER *1621-87 -*
ANALYTICAL NUMBER 044685

ANALYSIS REPORT

PROXIMATE	(Dry)%
Ash	98.75
Total Sulfur	1.02

ULTIMATE	(Dry)%
Carbon	0.82
Ash	98.75

MAJOR ASH ELEM	(Dry)%
SiO2	43.24
Al2O3	20.85
TiO2	0.97
Fe2O3	24.67
CaO	2.76
MgO	0.73
Na2O	2.45
K2O	1.92
P2O5	0.34
SO3	2.56
UND	-0.49

MISC. (As Det.)

Hg 0.015 PPM

AS DETERMINED MOISTURE: 0.06 %

DISTRIBUTION:
S. TSENG

Approved for transmittal _____

CONSOL ENERGY INC.
RESEARCH & DEVELOPMENT
ANALYTICAL LABORATORY
4000 BROWNSVILLE ROAD, SOUTH PARK, PA 15129

DESCRIPTION *ESP HOPPER ASH HOPPER 31L*
TEST 3
DATE SAMPLED *09/01/04*
SAMPLE NUMBER *3-31L*

DATE LOGGED *09/10/04*
DATE COMPLETED *09/28/04*
PROJECT NUMBER *1621-87 -*
ANALYTICAL NUMBER 044686

ANALYSIS REPORT

PROXIMATE	(Dry)%
Ash	98.75
Total Sulfur	0.83

ULTIMATE	(Dry)%
Carbon	0.99
Ash	98.75

MAJOR ASH ELEM	(Dry)%
SiO2	42.26
Al2O3	20.31
TiO2	0.95
Fe2O3	26.77
CaO	2.67
MgO	0.71
Na2O	2.10
K2O	1.75
P2O5	0.28
SO3	2.07
UND	0.13

MISC. (As Det.)

Hg 0.025 PPM

AS DETERMINED MOISTURE: 0.15 %

DISTRIBUTION:
S. TSENG

Approved for transmittal _____

CONSOL ENERGY INC.
RESEARCH & DEVELOPMENT
ANALYTICAL LABORATORY
4000 BROWNSVILLE ROAD, SOUTH PARK, PA 15129

DESCRIPTION *ESP HOPPER ASH HOPPER 32L TEST 3*
DATE SAMPLED *09/01/04*
SAMPLE NUMBER *3-32L*

DATE LOGGED *09/10/04*
DATE COMPLETED *09/28/04*
PROJECT NUMBER *1621-87 -*
ANALYTICAL NUMBER 044687

ANALYSIS REPORT

PROXIMATE	(Dry)%
Ash	97.39
Total Sulfur	1.16

ULTIMATE	(Dry)%
Carbon	1.42
Ash	97.39

MAJOR ASH ELEM	(Dry)%
SiO2	43.84
Al2O3	21.64
TiO2	1.01
Fe2O3	22.44
CaO	2.79
MgO	0.77
Na2O	2.11
K2O	2.09
P2O5	0.44
SO3	2.89
UND	-0.02

MISC. (As Det.)

Hg 0.043 PPM

AS DETERMINED MOISTURE: 0.18 %

DISTRIBUTION:
S. TSENG

Approved for transmittal _____

CONSOL ENERGY INC.
RESEARCH & DEVELOPMENT
ANALYTICAL LABORATORY
4000 BROWNSVILLE ROAD, SOUTH PARK, PA 15129

DESCRIPTION *ESP HOPPER ASH HOPPER 35L TEST 3*
DATE SAMPLED *09/01/04*
SAMPLE NUMBER *3-35L*

DATE LOGGED *09/10/04*
DATE COMPLETED *09/28/04*
PROJECT NUMBER *1621-87 -*
ANALYTICAL NUMBER 044688

ANALYSIS REPORT

PROXIMATE	(Dry)%
Ash	98.60
Total Sulfur	0.62

MISC. (As Det.)	
Hg	0.052 PPM

ULTIMATE	(Dry)%
Carbon	1.21
Ash	98.60

MAJOR ASH ELEM	(Dry)%
SiO2	42.42
Al2O3	20.32
TiO2	0.94
Fe2O3	26.43
CaO	2.69
MgO	0.71
Na2O	2.04
K2O	1.77
P2O5	0.30
SO3	1.54
UND	0.84

AS DETERMINED MOISTURE: 0.12 %

DISTRIBUTION:
S. TSENG

Approved for transmittal _____

CONSOL ENERGY INC.
RESEARCH & DEVELOPMENT
ANALYTICAL LABORATORY
4000 BROWNSVILLE ROAD, SOUTH PARK, PA 15129

DESCRIPTION *ESP HOPPER ASH HOPPER 37L*
TEST 3
DATE SAMPLED *09/01/04*
SAMPLE NUMBER *3-37L*

DATE LOGGED *09/10/04*
DATE COMPLETED *09/28/04*
PROJECT NUMBER *1621-87 -*
ANALYTICAL NUMBER **044689**

ANALYSIS REPORT

PROXIMATE	(Dry)%
Ash	95.66
Total Sulfur	1.98

MISC. (As Det.)	
Hg	0.037 PPM

ULTIMATE	(Dry)%
Carbon	1.39
Ash	95.66

MAJOR ASH ELEM	(Dry)%
SiO2	43.30
Al2O3	22.83
TiO2	1.15
Fe2O3	16.90
CaO	3.38
MgO	1.04
Na2O	1.62
K2O	2.32
P2O5	0.82
SO3	4.95
UND	1.69

AS DETERMINED MOISTURE: 1.59 %

DISTRIBUTION:
S. TSENG

Approved for transmittal _____

CONSOL ENERGY INC.
RESEARCH & DEVELOPMENT
ANALYTICAL LABORATORY
4000 BROWNSVILLE ROAD, SOUTH PARK, PA 15129

DESCRIPTION *ESP HOPPER ASH HOPPER 15U TEST 3*
DATE SAMPLED *09/01/04*
SAMPLE NUMBER *3-15U*

DATE LOGGED *09/10/04*
DATE COMPLETED *09/28/04*
PROJECT NUMBER *1621-87 -*
ANALYTICAL NUMBER **044690**

ANALYSIS REPORT

PROXIMATE	(Dry)%
Ash	97.57
Total Sulfur	0.91

ULTIMATE	(Dry)%
Carbon	1.66
Ash	97.57

MAJOR ASH ELEM	(Dry)%
SiO2	44.31
Al2O3	21.54
TiO2	1.00
Fe2O3	22.37
CaO	2.73
MgO	0.77
Na2O	1.95
K2O	2.03
P2O5	0.37
SO3	2.27
UND	0.66

MISC. (As Det.)	
Hg	0.067 PPM

AS DETERMINED MOISTURE: 0.17 %

DISTRIBUTION:
S. TSENG

Approved for transmittal _____

CONSOL ENERGY INC.
RESEARCH & DEVELOPMENT
ANALYTICAL LABORATORY
4000 BROWNSVILLE ROAD, SOUTH PARK, PA 15129

DESCRIPTION *ESP HOPPER ASH HOPPER 21U*
TEST 3
DATE SAMPLED *09/01/04*
SAMPLE NUMBER *3-21U*

DATE LOGGED *09/10/04*
DATE COMPLETED *09/28/04*
PROJECT NUMBER *1621-87 -*
ANALYTICAL NUMBER 044691

ANALYSIS REPORT

PROXIMATE	(Dry)%
Ash	98.82
Total Sulfur	0.77

ULTIMATE	(Dry)%
Carbon	0.86
Ash	98.82

MAJOR ASH ELEM	(Dry)%
SiO2	42.85
Al2O3	20.63
TiO2	0.96
Fe2O3	26.22
CaO	2.72
MgO	0.73
Na2O	1.98
K2O	1.89
P2O5	0.32
SO3	1.93
UND	-0.23

MISC. (As Det.)

Hg 0.028 PPM

AS DETERMINED MOISTURE: 0.16 %

DISTRIBUTION:
S. TSENG

Approved for transmittal _____

CONSOL ENERGY INC.
RESEARCH & DEVELOPMENT
ANALYTICAL LABORATORY
4000 BROWNSVILLE ROAD, SOUTH PARK, PA 15129

DESCRIPTION *ESP HOPPER ASH HOPPER 25U*
TEST 3
DATE SAMPLED *09/01/04*
SAMPLE NUMBER *3-25U*

DATE LOGGED *09/10/04*
DATE COMPLETED *09/28/04*
PROJECT NUMBER *1621-87 -*
ANALYTICAL NUMBER 044692

ANALYSIS REPORT

PROXIMATE	(Dry)%
Ash	98.56
Total Sulfur	1.16

ULTIMATE	(Dry)%
Carbon	0.90
Ash	98.56

MAJOR ASH ELEM	(Dry)%
SiO2	43.25
Al2O3	20.93
TiO2	0.98
Fe2O3	22.43
CaO	2.75
MgO	0.74
Na2O	2.58
K2O	1.90
P2O5	0.37
SO3	2.91
UND	1.16

MISC. (As Det.)

Hg 0.019 PPM

AS DETERMINED MOISTURE: 0.16 %

DISTRIBUTION:
S. TSENG

Approved for transmittal _____

CONSOL ENERGY INC.
RESEARCH & DEVELOPMENT
ANALYTICAL LABORATORY
4000 BROWNSVILLE ROAD, SOUTH PARK, PA 15129

DESCRIPTION *ESP HOPPER ASH HOPPER 26U TEST 3*
DATE SAMPLED *09/01/04*
SAMPLE NUMBER *3-26U*

DATE LOGGED *09/10/04*
DATE COMPLETED *09/28/04*
PROJECT NUMBER *1621-87 -*
ANALYTICAL NUMBER 044693

ANALYSIS REPORT

PROXIMATE	(Dry)%
Ash	97.99
Total Sulfur	1.23

ULTIMATE	(Dry)%
Carbon	0.96
Ash	97.99

MAJOR ASH ELEM	(Dry)%
SiO2	41.50
Al2O3	20.30
TiO2	0.97
Fe2O3	24.54
CaO	2.76
MgO	0.73
Na2O	1.92
K2O	1.82
P2O5	0.40
SO3	3.08
UND	1.98

MISC. (As Det.)

Hg 0.023 PPM

AS DETERMINED MOISTURE: 0.19 %

DISTRIBUTION:
S. TSENG

Approved for transmittal _____

CONSOL ENERGY INC.
RESEARCH & DEVELOPMENT
ANALYTICAL LABORATORY
4000 BROWNSVILLE ROAD, SOUTH PARK, PA 15129

DESCRIPTION *ESP HOPPER ASH HOPPER 31U TEST 3*
DATE SAMPLED *09/01/04*
SAMPLE NUMBER *3-31U*

DATE LOGGED *09/10/04*
DATE COMPLETED *10/06/04*
PROJECT NUMBER *1621-87 -*
ANALYTICAL NUMBER 044694

ANALYSIS REPORT

PROXIMATE	(Dry)%
Ash	98.32
Total Sulfur	0.86

ULTIMATE	(Dry)%
Carbon	1.16
Ash	98.32

MAJOR ASH ELEM	(Dry)%
SiO2	43.91
Al2O3	21.23
TiO2	0.99
Fe2O3	23.69
CaO	2.72
MgO	0.73
Na2O	2.03
K2O	1.89
P2O5	0.36
SO3	2.15
UND	0.30

MISC. (As Det.)

Hg 0.051 PPM

AS DETERMINED MOISTURE: 0.20 %

DISTRIBUTION:
S. TSENG

Approved for transmittal _____

CONSOL ENERGY INC.
RESEARCH & DEVELOPMENT
ANALYTICAL LABORATORY
4000 BROWNSVILLE ROAD, SOUTH PARK, PA 15129

DESCRIPTION *ESP HOPPER ASH HOPPER 35U*
TEST 3
DATE SAMPLED *09/01/04*
SAMPLE NUMBER *3-35U*

DATE LOGGED *09/10/04*
DATE COMPLETED *10/06/04*
PROJECT NUMBER *1621-87 -*
ANALYTICAL NUMBER 044695

ANALYSIS REPORT

PROXIMATE	(Dry)%
Ash	98.57
Total Sulfur	0.71

MISC. (As Det.)	
Hg	0.043 PPM

ULTIMATE	(Dry)%
Carbon	1.14
Ash	98.57

MAJOR ASH ELEM	(Dry)%
SiO2	41.66
Al2O3	20.00
TiO2	0.93
Fe2O3	27.25
CaO	2.66
MgO	0.69
Na2O	2.44
K2O	1.70
P2O5	0.29
SO3	1.77
UND	0.61

AS DETERMINED MOISTURE: 0.23 %

DISTRIBUTION:
S. TSENG

Approved for transmittal _____

CONSOL ENERGY INC.
RESEARCH & DEVELOPMENT
ANALYTICAL LABORATORY
4000 BROWNSVILLE ROAD, SOUTH PARK, PA 15129

DESCRIPTION *ESP HOPPER ASH HOPPER 11L*
TEST 4
DATE SAMPLED *09/02/04*
SAMPLE NUMBER *4-11L*

DATE LOGGED *09/10/04*
DATE COMPLETED *10/06/04*
PROJECT NUMBER *1621-87 -*
ANALYTICAL NUMBER **044696**

ANALYSIS REPORT

PROXIMATE	(Dry)%
Ash	98.03
Total Sulfur	0.94

ULTIMATE	(Dry)%
Carbon	1.44
Ash	98.03

MAJOR ASH ELEM	(Dry)%
SiO2	42.45
Al2O3	20.33
TiO2	0.95
Fe2O3	24.34
CaO	2.59
MgO	0.71
Na2O	3.18
K2O	1.74
P2O5	0.30
SO3	2.36
UND	1.05

MISC. (As Det.)

Hg 0.063 PPM

AS DETERMINED MOISTURE: 0.28 %

DISTRIBUTION:
S. TSENG

Approved for transmittal _____

CONSOL ENERGY INC.
RESEARCH & DEVELOPMENT
ANALYTICAL LABORATORY
4000 BROWNSVILLE ROAD, SOUTH PARK, PA 15129

DESCRIPTION *ESP HOPPER ASH HOPPER 15L TEST 4*
DATE SAMPLED *09/02/04*
SAMPLE NUMBER *4-15L*

DATE LOGGED *09/10/04*
DATE COMPLETED *10/06/04*
PROJECT NUMBER *1621-87 -*
ANALYTICAL NUMBER **044697**

ANALYSIS REPORT

PROXIMATE	(Dry)%
Ash	97.79
Total Sulfur	1.14

MISC. (As Det.)	
Hg	0.044 PPM

ULTIMATE	(Dry)%
Carbon	1.56
Ash	97.79

MAJOR ASH ELEM	(Dry)%
SiO2	42.43
Al2O3	20.55
TiO2	0.95
Fe2O3	24.01
CaO	2.62
MgO	0.72
Na2O	2.99
K2O	1.86
P2O5	0.33
SO3	2.84
UND	0.70

AS DETERMINED MOISTURE: 0.24 %

DISTRIBUTION:
S. TSENG

Approved for transmittal _____

CONSOL ENERGY INC.
RESEARCH & DEVELOPMENT
ANALYTICAL LABORATORY
4000 BROWNSVILLE ROAD, SOUTH PARK, PA 15129

DESCRIPTION *ESP HOPPER ASH HOPPER 16L*
TEST 4
DATE SAMPLED *09/02/04*
SAMPLE NUMBER *4-16L*

DATE LOGGED *09/10/04*
DATE COMPLETED *10/06/04*
PROJECT NUMBER *1621-87 -*
ANALYTICAL NUMBER **044698**

ANALYSIS REPORT

PROXIMATE	(Dry)%
Ash	97.03
Total Sulfur	1.30

MISC. (As Det.)	
Hg	0.076 PPM

ULTIMATE	(Dry)%
Carbon	2.01
Ash	97.03

MAJOR ASH ELEM	(Dry)%
SiO2	41.56
Al2O3	20.24
TiO2	0.95
Fe2O3	24.14
CaO	2.64
MgO	0.73
Na2O	2.89
K2O	1.75
P2O5	0.37
SO3	3.25
UND	1.48

AS DETERMINED MOISTURE: 0.19 %

DISTRIBUTION:
S. TSENG

Approved for transmittal _____

CONSOL ENERGY INC.
RESEARCH & DEVELOPMENT
ANALYTICAL LABORATORY
4000 BROWNSVILLE ROAD, SOUTH PARK, PA 15129

DESCRIPTION *ESP HOPPER ASH HOPPER 17L TEST 4*
DATE SAMPLED *09/02/04*
SAMPLE NUMBER *4-17L*

DATE LOGGED *09/10/04*
DATE COMPLETED *10/06/04*
PROJECT NUMBER *1621-87 -*
ANALYTICAL NUMBER 044699

ANALYSIS REPORT

PROXIMATE	(Dry)%
Ash	95.72
Total Sulfur	1.54

ULTIMATE	(Dry)%
Carbon	1.63
Ash	95.72

MAJOR ASH ELEM	(Dry)%
SiO2	45.03
Al2O3	23.52
TiO2	1.17
Fe2O3	16.83
CaO	2.89
MgO	0.89
Na2O	1.61
K2O	2.34
P2O5	0.72
SO3	3.84
UND	1.16

MISC. (As Det.)

Hg 0.054 PPM

AS DETERMINED MOISTURE: 0.46 %

DISTRIBUTION:
S. TSENG

Approved for transmittal _____

CONSOL ENERGY INC.
RESEARCH & DEVELOPMENT
ANALYTICAL LABORATORY
4000 BROWNSVILLE ROAD, SOUTH PARK, PA 15129

DESCRIPTION *ESP HOPPER ASH HOPPER 21L*
TEST 4
DATE SAMPLED *09/02/04*
SAMPLE NUMBER *4-21L*

DATE LOGGED *09/10/04*
DATE COMPLETED *10/06/04*
PROJECT NUMBER *1621-87 -*
ANALYTICAL NUMBER **044700**

ANALYSIS REPORT

PROXIMATE	(Dry)%
Ash	98.63
Total Sulfur	0.90

ULTIMATE	(Dry)%
Carbon	0.84
Ash	98.63

MAJOR ASH ELEM	(Dry)%
SiO2	41.49
Al2O3	19.84
TiO2	0.92
Fe2O3	26.51
CaO	2.60
MgO	0.70
Na2O	2.93
K2O	1.78
P2O5	0.30
SO3	2.24
UND	0.69

MISC. (As Det.)

Hg 0.021 PPM

AS DETERMINED MOISTURE: 0.21 %

DISTRIBUTION:
S. TSENG

Approved for transmittal _____

CONSOL ENERGY INC.
RESEARCH & DEVELOPMENT
ANALYTICAL LABORATORY
4000 BROWNSVILLE ROAD, SOUTH PARK, PA 15129

DESCRIPTION *ESP HOPPER ASH HOPPER 25L*
TEST 4
DATE SAMPLED *09/02/04*
SAMPLE NUMBER *4-25L*

DATE LOGGED *09/10/04*
DATE COMPLETED *10/06/04*
PROJECT NUMBER *1621-87 -*
ANALYTICAL NUMBER 044701

ANALYSIS REPORT

PROXIMATE	(Dry)%
Ash	98.55
Total Sulfur	1.13

ULTIMATE	(Dry)%
Carbon	0.91
Ash	98.55

MAJOR ASH ELEM	(Dry)%
SiO2	42.65
Al2O3	20.64
TiO2	0.96
Fe2O3	24.22
CaO	2.62
MgO	0.73
Na2O	3.17
K2O	1.89
P2O5	0.32
SO3	2.82
UND	-0.02

MISC. (As Det.)

Hg 0.019 PPM

AS DETERMINED MOISTURE: 0.25 %

DISTRIBUTION:
S. TSENG

Approved for transmittal _____

CONSOL ENERGY INC.
RESEARCH & DEVELOPMENT
ANALYTICAL LABORATORY
4000 BROWNSVILLE ROAD, SOUTH PARK, PA 15129

DESCRIPTION *ESP HOPPER ASH HOPPER 31L*
TEST 4
DATE SAMPLED *09/02/04*
SAMPLE NUMBER *4-31L*

DATE LOGGED *09/10/04*
DATE COMPLETED *10/06/04*
PROJECT NUMBER *1621-87 -*
ANALYTICAL NUMBER **044702**

ANALYSIS REPORT

PROXIMATE	(Dry)%
Ash	98.22
Total Sulfur	1.00

MISC. (As Det.)	
Hg	0.039 PPM

ULTIMATE	(Dry)%
Carbon	1.26
Ash	98.22

MAJOR ASH ELEM	(Dry)%
SiO2	42.26
Al2O3	20.39
TiO2	0.96
Fe2O3	24.90
CaO	2.62
MgO	0.73
Na2O	2.87
K2O	1.83
P2O5	0.34
SO3	2.50
UND	0.60

AS DETERMINED MOISTURE: 0.19 %

DISTRIBUTION:
S. TSENG

Approved for transmittal _____

CONSOL ENERGY INC.
RESEARCH & DEVELOPMENT
ANALYTICAL LABORATORY
4000 BROWNSVILLE ROAD, SOUTH PARK, PA 15129

DESCRIPTION *ESP HOPPER ASH HOPPER 32L TEST 4*
DATE SAMPLED *09/02/04*
SAMPLE NUMBER *4-32L*

DATE LOGGED *09/10/04*
DATE COMPLETED *10/06/04*
PROJECT NUMBER *1621-87 -*
ANALYTICAL NUMBER **044703**

ANALYSIS REPORT

PROXIMATE	(Dry)%
Ash	97.68
Total Sulfur	1.18

ULTIMATE	(Dry)%
Carbon	1.48
Ash	97.68

MAJOR ASH ELEM	(Dry)%
SiO2	43.23
Al2O3	21.20
TiO2	1.00
Fe2O3	22.10
CaO	2.65
MgO	0.75
Na2O	2.83
K2O	1.96
P2O5	0.39
SO3	2.96
UND	0.93

MISC. (As Det.)

Hg 0.050 PPM

AS DETERMINED MOISTURE: 0.21 %

DISTRIBUTION:
S. TSENG

Approved for transmittal _____

CONSOL ENERGY INC.
RESEARCH & DEVELOPMENT
ANALYTICAL LABORATORY
4000 BROWNSVILLE ROAD, SOUTH PARK, PA 15129

DESCRIPTION *ESP HOPPER ASH HOPPER 35L*
TEST 4
DATE SAMPLED *09/02/04*
SAMPLE NUMBER *4-35L*

DATE LOGGED *09/10/04*
DATE COMPLETED *10/06/04*
PROJECT NUMBER *1621-87 -*
ANALYTICAL NUMBER **044704**

ANALYSIS REPORT

PROXIMATE	(Dry)%
Ash	98.38
Total Sulfur	0.77

MISC. (As Det.)	
Hg	0.052 PPM

ULTIMATE	(Dry)%
Carbon	1.18
Ash	98.38

MAJOR ASH ELEM	(Dry)%
SiO2	41.37
Al2O3	19.92
TiO2	0.93
Fe2O3	27.39
CaO	2.59
MgO	0.70
Na2O	2.79
K2O	1.76
P2O5	0.29
SO3	1.92
UND	0.34

AS DETERMINED MOISTURE: 0.25 %

DISTRIBUTION:
S. TSENG

Approved for transmittal _____

CONSOL ENERGY INC.
RESEARCH & DEVELOPMENT
ANALYTICAL LABORATORY
4000 BROWNSVILLE ROAD, SOUTH PARK, PA 15129

DESCRIPTION *ESP HOPPER ASH HOPPER 37L*
TEST 4
DATE SAMPLED *09/02/04*
SAMPLE NUMBER *4-37L*

DATE LOGGED *09/10/04*
DATE COMPLETED *10/06/04*
PROJECT NUMBER *1621-87 -*
ANALYTICAL NUMBER **044705**

ANALYSIS REPORT

PROXIMATE	(Dry)%
Ash	96.13
Total Sulfur	1.61

ULTIMATE	(Dry)%
Carbon	1.30
Ash	96.13

MAJOR ASH ELEM	(Dry)%
SiO2	44.38
Al2O3	22.90
TiO2	1.15
Fe2O3	17.62
CaO	2.90
MgO	0.88
Na2O	1.80
K2O	2.21
P2O5	0.73
SO3	4.03
UND	1.40

MISC. (As Det.)

Hg 0.065 PPM

AS DETERMINED MOISTURE: 0.80 %

DISTRIBUTION:
S. TSENG

Approved for transmittal _____

CONSOL ENERGY INC.
RESEARCH & DEVELOPMENT
ANALYTICAL LABORATORY
4000 BROWNSVILLE ROAD, SOUTH PARK, PA 15129

DESCRIPTION *ESP HOPPER ASH HOPPER 15U TEST 4*
DATE SAMPLED *09/02/04*
SAMPLE NUMBER *4-15U*

DATE LOGGED *09/10/04*
DATE COMPLETED *10/06/04*
PROJECT NUMBER *1621-87 -*
ANALYTICAL NUMBER **044706**

ANALYSIS REPORT

PROXIMATE	(Dry)%
Ash	97.30
Total Sulfur	1.08

MISC. (As Det.)	
Hg	0.089 PPM

ULTIMATE	(Dry)%
Carbon	1.58
Ash	97.30

MAJOR ASH ELEM	(Dry)%
SiO2	43.82
Al2O3	21.38
TiO2	1.02
Fe2O3	22.08
CaO	2.62
MgO	0.77
Na2O	2.13
K2O	1.97
P2O5	0.38
SO3	2.70
UND	1.13

AS DETERMINED MOISTURE: 0.20 %

DISTRIBUTION:
S. TSENG

Approved for transmittal _____

CONSOL ENERGY INC.
RESEARCH & DEVELOPMENT
ANALYTICAL LABORATORY
4000 BROWNSVILLE ROAD, SOUTH PARK, PA 15129

DESCRIPTION *ESP HOPPER ASH HOPPER 21U*
TEST 4
DATE SAMPLED *09/02/04*
SAMPLE NUMBER *4-21U*

DATE LOGGED *09/10/04*
DATE COMPLETED *10/06/04*
PROJECT NUMBER *1621-87 -*
ANALYTICAL NUMBER **044707**

ANALYSIS REPORT

PROXIMATE	(Dry)%
Ash	98.92
Total Sulfur	0.80

MISC. (As Det.)	
Hg	0.032 PPM

ULTIMATE	(Dry)%
Carbon	0.96
Ash	98.92

MAJOR ASH ELEM	(Dry)%
SiO2	42.61
Al2O3	20.43
TiO2	0.96
Fe2O3	26.22
CaO	2.63
MgO	0.71
Na2O	2.44
K2O	1.81
P2O5	0.30
SO3	1.99
UND	-0.10

AS DETERMINED MOISTURE: 0.11 %

DISTRIBUTION:
S. TSENG

Approved for transmittal _____

CONSOL ENERGY INC.
RESEARCH & DEVELOPMENT
ANALYTICAL LABORATORY
4000 BROWNSVILLE ROAD, SOUTH PARK, PA 15129

DESCRIPTION *ESP HOPPER ASH HOPPER 25U*
TEST 4
DATE SAMPLED *09/02/04*
SAMPLE NUMBER *4-25U*

DATE LOGGED *09/10/04*
DATE COMPLETED *10/06/04*
PROJECT NUMBER *1621-87 -*
ANALYTICAL NUMBER 044708

ANALYSIS REPORT

PROXIMATE	(Dry)%
Ash	98.29
Total Sulfur	1.25

ULTIMATE	(Dry)%
Carbon	1.02
Ash	98.29

MAJOR ASH ELEM	(Dry)%
SiO2	43.01
Al2O3	20.87
TiO2	0.99
Fe2O3	22.54
CaO	2.58
MgO	0.75
Na2O	3.16
K2O	1.93
P2O5	0.35
SO3	3.13
UND	0.69

MISC. (As Det.)

Hg 0.026 PPM

AS DETERMINED MOISTURE: 0.15 %

DISTRIBUTION:
S. TSENG

Approved for transmittal _____

CONSOL ENERGY INC.
RESEARCH & DEVELOPMENT
ANALYTICAL LABORATORY
4000 BROWNSVILLE ROAD, SOUTH PARK, PA 15129

DESCRIPTION *ESP HOPPER ASH HOPPER 26U TEST 4*
DATE SAMPLED *09/02/04*
SAMPLE NUMBER *4-26U*

DATE LOGGED *09/10/04*
DATE COMPLETED *10/06/04*
PROJECT NUMBER *1621-87 -*
ANALYTICAL NUMBER **044709**

ANALYSIS REPORT

PROXIMATE	(Dry)%
Ash	98.08
Total Sulfur	1.33

ULTIMATE	(Dry)%
Carbon	0.96
Ash	98.08

MAJOR ASH ELEM	(Dry)%
SiO2	41.25
Al2O3	20.33
TiO2	0.96
Fe2O3	25.64
CaO	2.63
MgO	0.73
Na2O	2.88
K2O	1.92
P2O5	0.38
SO3	3.33
UND	-0.05

MISC. (As Det.)

Hg 0.036 PPM

AS DETERMINED MOISTURE: 0.11 %

DISTRIBUTION:
S. TSENG

Approved for transmittal _____

CONSOL ENERGY INC.
RESEARCH & DEVELOPMENT
ANALYTICAL LABORATORY
4000 BROWNSVILLE ROAD, SOUTH PARK, PA 15129

DESCRIPTION *ESP HOPPER ASH HOPPER 31U TEST 4*
DATE SAMPLED *09/02/04*
SAMPLE NUMBER *4-31U*

DATE LOGGED *09/10/04*
DATE COMPLETED *10/06/04*
PROJECT NUMBER *1621-87 -*
ANALYTICAL NUMBER 044710

ANALYSIS REPORT

PROXIMATE	(Dry)%
Ash	98.43
Total Sulfur	0.96

MISC. (As Det.)	
Hg	0.061 PPM

ULTIMATE	(Dry)%
Carbon	1.11
Ash	98.43

MAJOR ASH ELEM	(Dry)%
SiO2	43.27
Al2O3	20.87
TiO2	0.98
Fe2O3	24.56
CaO	2.62
MgO	0.74
Na2O	2.60
K2O	1.92
P2O5	0.34
SO3	2.41
UND	-0.31

AS DETERMINED MOISTURE: 0.15 %

DISTRIBUTION:
S. TSENG

Approved for transmittal _____

CONSOL ENERGY INC.
RESEARCH & DEVELOPMENT
ANALYTICAL LABORATORY
4000 BROWNSVILLE ROAD, SOUTH PARK, PA 15129

DESCRIPTION *ESP HOPPER ASH HOPPER 35U*
TEST 4
DATE SAMPLED *09/02/04*
SAMPLE NUMBER *4-35U*

DATE LOGGED *09/10/04*
DATE COMPLETED *10/06/04*
PROJECT NUMBER *1621-87 -*
ANALYTICAL NUMBER **044711**

ANALYSIS REPORT

PROXIMATE	(Dry)%
Ash	99.21
Total Sulfur	0.68

ULTIMATE	(Dry)%
Carbon	0.48
Ash	99.21

MAJOR ASH ELEM	(Dry)%
SiO2	32.84
Al2O3	15.37
TiO2	0.72
Fe2O3	42.80
CaO	2.50
MgO	0.55
Na2O	2.48
K2O	1.22
P2O5	0.19
SO3	1.71
UND	-0.38

MISC. (As Det.)	
Hg	0.024 PPM

AS DETERMINED MOISTURE: 0.38 %

DISTRIBUTION:
S. TSENG

Approved for transmittal _____

CONSOL ENERGY INC.
RESEARCH & DEVELOPMENT
ANALYTICAL LABORATORY
4000 BROWNSVILLE ROAD, SOUTH PARK, PA 15129

DESCRIPTION *LIME SLURRY SOLIDS TEST 1*
UNIT 2
PLANT NO. 10
DATE SAMPLED *08/31/04*
SAMPLE NUMBER 1

DATE LOGGED *09/10/04*
DATE COMPLETED *10/19/04*
PROJECT NUMBER *1621-87 -*
ANALYTICAL NUMBER **044642**

ANALYSIS REPORT

PROXIMATE	(Dry)%
Ash	74.00
Total Sulfur	0.08

MISC. (As Det.)	
Hg	<0.004
% SOLIDS	21.46
DENSITY	1.122

ULTIMATE	(Dry)%
Carbon	0.35
Chlorine	<0.001
Ash	74.00

MAJOR ASH ELEM	(Dry)%
SiO2	1.39
Al2O3	0.43
TiO2	0.02
Fe2O3	0.17
CaO	68.38
MgO	3.45
Na2O	0.02
K2O	0.10
P2O5	
SO3	0.21
UND	25.83

AS DETERMINED MOISTURE: 1.12 %

DISTRIBUTION:
S. TSENG

Approved for transmittal _____

CONSOL ENERGY INC.
RESEARCH & DEVELOPMENT
ANALYTICAL LABORATORY
4000 BROWNSVILLE ROAD, SOUTH PARK, PA 15129

DESCRIPTION *LIME SLURRY SOLIDS TEST 2*
PLANT NO. 10 *UNIT 2*
DATE SAMPLED *09/01/04*
SAMPLE NUMBER 2

DATE LOGGED *09/10/04*
DATE COMPLETED *10/25/04*
PROJECT NUMBER *1621-87 -*
ANALYTICAL NUMBER 044643

ANALYSIS REPORT

PROXIMATE	(Dry)%
Ash	74.63
Total Sulfur	0.10

MISC. (As Det.)	
Hg	<0.004
% SOLIDS	16.52
DENSITY	1.051

ULTIMATE	(Dry)%
Carbon	1.09
Chlorine	<0.001
Ash	74.63

MAJOR ASH ELEM	(Dry)%
SiO2	1.37
Al2O3	0.49
TiO2	0.02
Fe2O3	0.20
CaO	70.90
MgO	4.41
Na2O	0.01
K2O	0.05
P2O5	0.02
SO3	0.26
UND	22.27

AS DETERMINED MOISTURE: 0.68 %

DISTRIBUTION:
S. TSENG

Approved for transmittal _____

CONSOL ENERGY INC.
RESEARCH & DEVELOPMENT
ANALYTICAL LABORATORY
4000 BROWNSVILLE ROAD, SOUTH PARK, PA 15129

DESCRIPTION *LIME SLURRY SOLIDS TEST 3*
PLANT NO. 10 *' UNIT 2*
DATE SAMPLED *09/01/04*
SAMPLE NUMBER 3

DATE LOGGED *09/10/04*
DATE COMPLETED 10/19/04
PROJECT NUMBER 1621-87 -
ANALYTICAL NUMBER **044644**

ANALYSIS REPORT

PROXIMATE	(Dry)%
Ash	74.70
Total Sulfur	0.09

MISC. (As Det.)	
Hg	<0.004
% SOLIDS	20.43
DENSITY	1.034

ULTIMATE	(Dry)%
Carbon	0.79
Chlorine	<0.001
Ash	74.70

MAJOR ASH ELEM	(Dry)%
SiO2	1.40
Al2O3	0.45
TiO2	0.02
Fe2O3	0.19
CaO	69.23
MgO	4.21
Na2O	0.01
K2O	0.06
P2O5	
SO3	0.23
UND	24.20

AS DETERMINED MOISTURE: 0.56 %

DISTRIBUTION:
S. TSENG

Approved for transmittal _____

CONSOL ENERGY INC.
RESEARCH & DEVELOPMENT
ANALYTICAL LABORATORY
4000 BROWNSVILLE ROAD, SOUTH PARK, PA 15129

DESCRIPTION *LIME SLURRY SOLIDS TEST 4*
PLANT NO. 10 *UNIT 2*
DATE SAMPLED *09/02/04*
SAMPLE NUMBER 4

DATE LOGGED *09/10/04*
DATE COMPLETED *10/19/04*
PROJECT NUMBER *1621-87 -*
ANALYTICAL NUMBER 044645

ANALYSIS REPORT

PROXIMATE	(Dry)%
Ash	73.81
Total Sulfur	0.09

MISC. (As Det.)		
Hg	<0.004	PPM
% SOLIDS	40.47	
DENSITY	1.084	

ULTIMATE	(Dry)%
Carbon	0.84
Chlorine	<0.001
Ash	73.81

MAJOR ASH ELEM	(Dry)%
SiO2	1.44
Al2O3	0.45
TiO2	0.02
Fe2O3	0.18
CaO	69.34
MgO	3.68
Na2O	0.01
K2O	0.07
P2O5	0.02
SO3	0.23
UND	24.56

AS DETERMINED MOISTURE: 1.17 %

DISTRIBUTION:
S. TSENG

Approved for transmittal _____

CONSOL ENERGY INC.
RESEARCH & DEVELOPMENT
ANALYTICAL LABORATORY
SOUTH PARK, PENNSYLVANIA 15129

TO: S. TSENG

PROJECT NUMBER 1621-87 -

DATE LOGGED 09/10/04
DATE COMPLETED / /

DESCRIPTION LIME SLURRY FILTRATE (PLANT NO. 10 UNIT #2
COMMENTS TEST 1
SAMPLE NUMBER 1
ANALYTICAL NUMBER 044626

		-------- WATER ANALYSIS ---------		
ANALYSIS	UNITS	VALUE	VALUE	DUP AVG
Calcium		624		
Total Iron		<0.05		
Magnesium		0.99		
Potassium		289		
Sodium		66.2		
Ammonia as NH3	ppm	<10		
Chloride		100		
Nitrate as N		<10		
Sulfate		145		
MERCURY	ng/ml	<1.0		

Note: All units mg/L unless specified

CONSOL ENERGY INC.
RESEARCH & DEVELOPMENT
ANALYTICAL LABORATORY
SOUTH PARK, PENNSYLVANIA 15129

TO: S. TSENG

PROJECT NUMBER 1621-87 -

DATE LOGGED 09/10/04
DATE COMPLETED / /

DESCRIPTION LIME SLURRY FILTRATE (PLANT NO. 10 UNIT #2
COMMENTS TEST 2
SAMPLE NUMBER 2
ANALYTICAL NUMBER 044627

		-------- WATER ANALYSIS ---------		
ANALYSIS	UNITS	VALUE	VALUE	DUP AVG
Calcium		787		
Total Iron		0.10		
Magnesium		2.82		
Potassium		224		
Sodium		56.7		
Ammonia as NH3	ppm	<10		
Chloride		150		
Nitrate as N		<10		
Sulfate		122		
MERCURY	ng/ml	<1.0		

Note: All units mg/L unless specified

CONSOL ENERGY INC.
RESEARCH & DEVELOPMENT
ANALYTICAL LABORATORY
SOUTH PARK, PENNSYLVANIA 15129

TO: S. TSENG

PROJECT NUMBER 1621-87 -

DATE LOGGED 09/10/04
DATE COMPLETED / /

DESCRIPTION LIME SLURRY FILTRATE (PLANT NO. 10 UNIT #2
COMMENTS TEST 3
SAMPLE NUMBER 3
ANALYTICAL NUMBER 044628

		-------- WATER ANALYSIS ---------		
ANALYSIS	UNITS	VALUE	VALUE	DUP AVG
Calcium		699		
Total Iron		<0.05		
Magnesium		0.60		
Potassium		228		
Sodium		57.1		
Ammonia as NH3	ppm	<10		
Chloride		200		
Nitrate as N		<10		
Sulfate		126		

MERCURY	ng/ml	<1.0

Note: All units mg/L unless specified

CONSOL ENERGY INC.
RESEARCH & DEVELOPMENT
ANALYTICAL LABORATORY
SOUTH PARK, PENNSYLVANIA 15129

TO: S. TSENG

PROJECT NUMBER 1621-87 -

DATE LOGGED 09/10/04
DATE COMPLETED / /

DESCRIPTION LIME SLURRY FILTRATE PLANT NO. 10 √ UNIT #2
COMMENTS TEST 4
SAMPLE NUMBER 4
ANALYTICAL NUMBER 044629

		WATER ANALYSIS		
ANALYSIS	UNITS	VALUE	VALUE	DUP AVG
Calcium		713		
Total Iron		<0.05		
Magnesium		0.37		
Potassium		258		
Sodium		62.7		
Ammonia as NH3	ppm	<10		
Chloride		150		
Nitrate as N		<10		
Sulfate		141		
MERCURY	ng/ml	<1.0		

Note: All units mg/L unless specified

CONSOL ENERGY INC.
RESEARCH & DEVELOPMENT
ANALYTICAL LABORATORY
4000 BROWNSVILLE ROAD, SOUTH PARK, PA 15129

DESCRIPTION *FGD SLURRY TEST 1*
PLANT NO. 10 *UNIT 2*
DATE SAMPLED *08/31/04*
SAMPLE NUMBER 1

DATE LOGGED *09/10/04*
DATE COMPLETED *10/25/04*
PROJECT NUMBER *1621-87 -*
ANALYTICAL NUMBER **044646**

ANALYSIS REPORT

PROXIMATE	(Dry)%
Ash	92.64
Total Sulfur	22.50

MISC. (As Det.)	
Hg	0.490 PPM
% SOLIDS	4.9
DENSITY	1.072

ULTIMATE	(Dry)%
Carbon	0.36
Chlorine	~~0.664~~ 2.04
Ash	92.64

MAJOR ASH ELEM	(Dry)%
SiO2	1.20
Al2O3	0.30
TiO2	0.01
Fe2O3	0.15
CaO	35.89
MgO	6.18
Na2O	0.12
K2O	0.19
P2O5	<0.00
SO3	56.25
UND	-0.29

AS DETERMINED MOISTURE: 0.53 %

DISTRIBUTION:
S. TSENG

Approved for transmittal _____

CONSOL ENERGY INC.
RESEARCH & DEVELOPMENT
ANALYTICAL LABORATORY
4000 BROWNSVILLE ROAD, SOUTH PARK, PA 15129

DESCRIPTION *FGD SLURRY TEST 2*
PLANT NO. 10 *UNIT 2*

DATE SAMPLED *09/01/04*
SAMPLE NUMBER 2

DATE LOGGED *09/10/04*
DATE COMPLETED *10/25/04*
PROJECT NUMBER *1621-87 -*
ANALYTICAL NUMBER 044647

ANALYSIS REPORT

PROXIMATE	(Dry)%
Ash	93.31
Total Sulfur	22.52

MISC. (As Det.)	
Hg	0.431 PPM
% SOLIDS	4.8
DENSITY	1.072

ULTIMATE	(Dry)%
Carbon	0.24
Chlorine	0.514 PPM
Ash	93.31

MAJOR ASH ELEM	(Dry)%
SiO2	1.18
Al2O3	0.33
TiO2	0.01
Fe2O3	0.16
CaO	39.74
MgO	1.80
Na2O	0.07
K2O	0.10
P2O5	<0.00
SO3	56.29
UND	0.32

AS DETERMINED MOISTURE: 0.86 %

DISTRIBUTION:
S. TSENG

Approved for transmittal _____

CONSOL ENERGY INC.
RESEARCH & DEVELOPMENT
ANALYTICAL LABORATORY
4000 BROWNSVILLE ROAD, SOUTH PARK, PA 15129

DESCRIPTION *FGD SLURRY TEST 3*
PLANT NO. 10 *UNIT 2*
DATE SAMPLED *09/01/04*
SAMPLE NUMBER 3

DATE LOGGED *09/10/04*
DATE COMPLETED *10/25/04*
PROJECT NUMBER *1621-87 -*
ANALYTICAL NUMBER **044648**

ANALYSIS REPORT

PROXIMATE	(Dry)%
Ash	92.37
Total Sulfur	22.32

MISC. (As Det.)	
Hg	0.353 PPM
% SOLIDS	5.3
DENSITY	1.075

ULTIMATE	(Dry)%
Carbon	0.22
Chlorine	0.546
Ash	92.37

MAJOR ASH ELEM	(Dry)%
SiO2	0.89
Al2O3	0.27
TiO2	0.01
Fe2O3	0.13
CaO	33.06
MgO	7.82
Na2O	0.16
K2O	0.24
P2O5	<0.00
SO3	55.81
UND	1.61

AS DETERMINED MOISTURE: 1.08 %

DISTRIBUTION:
S. TSENG

Approved for transmittal _____

CONSOL ENERGY INC.
RESEARCH & DEVELOPMENT
ANALYTICAL LABORATORY
4000 BROWNSVILLE ROAD, SOUTH PARK, PA 15129

DESCRIPTION *FGD SLURRY TEST 4*
PLANT NO. 10 *UNIT 2*

DATE SAMPLED *09/02/04*
SAMPLE NUMBER 4

DATE LOGGED *09/10/04*
DATE COMPLETED *10/25/04*
PROJECT NUMBER *1621-87 -*
ANALYTICAL NUMBER **044649**

ANALYSIS REPORT

PROXIMATE	(Dry)%
Ash	89.13
Total Sulfur	22.73

MISC. (As Det.)	
Hg	0.385 PPM
% SOLIDS	5.2
DENSITY	1.076

ULTIMATE	(Dry)%
Carbon	0.19
Chlorine	0.473 PPM
Ash	89.13

MAJOR ASH ELEM	(Dry)%
SiO2	1.12
Al2O3	0.32
TiO2	0.01
Fe2O3	0.17
CaO	39.90
MgO	3.05
Na2O	0.09
K2O	0.13
P2O5	<0.00
SO3	56.82
UND	-1.61

AS DETERMINED MOISTURE: 0.73 %

DISTRIBUTION:
S. TSENG

Approved for transmittal _____

CONSOL ENERGY INC.
RESEARCH & DEVELOPMENT
ANALYTICAL LABORATORY
SOUTH PARK, PENNSYLVANIA 15129

TO: S. TSENG

PROJECT NUMBER 1621-87 -

DATE LOGGED 09/10/04
DATE COMPLETED / /

DESCRIPTION FGD SLURRY FILTRATE PLANT NO. 10 √ UNIT #2
COMMENTS TEST 1
SAMPLE NUMBER 1
ANALYTICAL NUMBER 044622

ANALYSIS	UNITS	WATER ANALYSIS VALUE	VALUE	DUP AVG
Calcium		111		
Total Iron		0.73		
Magnesium		9450		
Potassium		357		
Sodium		247		
Ammonia as NH3	ppm	<10		
Chloride		2040		
Nitrate as N		<10		
Sulfate		35900		
MERCURY	ng/ml	7.4		

Note: All units mg/L unless specified

CONSOL ENERGY INC.
RESEARCH & DEVELOPMENT
ANALYTICAL LABORATORY
SOUTH PARK, PENNSYLVANIA 15129

TO: S. TSENG

PROJECT NUMBER 1621-87 -

DATE LOGGED 09/10/04
DATE COMPLETED / /

DESCRIPTION FGD SLURRY FILTRATE (PLANT NO. 10 UNIT #2
COMMENTS TEST 2
SAMPLE NUMBER 2
ANALYTICAL NUMBER 044623

ANALYSIS	UNITS	WATER ANALYSIS VALUE	VALUE	DUP AVG
Calcium		107		
Total Iron		0.87		
Magnesium		8890		
Potassium		346		
Sodium		236		
Ammonia as NH3	ppm	<10		
Chloride		1290		
Nitrate as N		<10		
Sulfate		38200		
MERCURY	ng/ml	8.1		

Note: All units mg/L unless specified

CONSOL ENERGY INC.
RESEARCH & DEVELOPMENT
ANALYTICAL LABORATORY
SOUTH PARK, PENNSYLVANIA 15129

TO: S. TSENG

PROJECT NUMBER 1621-87 -

DATE LOGGED 09/10/04
DATE COMPLETED / /

DESCRIPTION FGD SLURRY FILTRATE PLANT NO. 10 ↓ UNIT #2
COMMENTS TEST 3
SAMPLE NUMBER 3
ANALYTICAL NUMBER 044624

ANALYSIS	UNITS	WATER ANALYSIS VALUE	VALUE	DUP AVG
Calcium		87.3		
Total Iron		0.99		
Magnesium		8850		
Potassium		349		
Sodium		236		
Ammonia as NH3	ppm	<10		
Chloride		1700		
Nitrate as N		<10		
Sulfate		33900		
MERCURY	ng/ml	7.6		

Note: All units mg/L unless specified

CONSOL ENERGY INC.
RESEARCH & DEVELOPMENT
ANALYTICAL LABORATORY
SOUTH PARK, PENNSYLVANIA 15129

TO: S. TSENG

PROJECT NUMBER 1621-87 -

DATE LOGGED 09/10/04
DATE COMPLETED / /

DESCRIPTION FGD SLURRY FILTRATE PLANT NO. 10 √ UNIT #2
COMMENTS TEST 4
SAMPLE NUMBER 4
ANALYTICAL NUMBER 044625

ANALYSIS	UNITS	WATER ANALYSIS VALUE	VALUE	DUP AVG
Calcium		85.1		
Total Iron		1.46		
Magnesium		9050		
Potassium		364		
Sodium		240		
Ammonia as NH3	ppm	<10		
Chloride		2870		
Nitrate as N		<10		
Sulfate		51900		
MERCURY	ng/ml	8.3		

Note: All units mg/L unless specified

CONSOL ENERGY INC.
RESEARCH & DEVELOPMENT
ANALYTICAL LABORATORY
SOUTH PARK, PENNSYLVANIA 15129

TO: S. TSENG

PROJECT NUMBER 1621-87 -

DATE LOGGED 09/10/04
DATE COMPLETED / /

DESCRIPTION FGD MAKEUP WATER PLANT NO. 10 | UNIT #2
COMMENTS TEST 1
SAMPLE NUMBER 1
ANALYTICAL NUMBER 044618

		WATER ANALYSIS		
ANALYSIS	UNITS	VALUE	VALUE	DUP AVG
Calcium		71.5		
Total Iron		0.17		
Magnesium		5440		
Potassium		154		
Sodium		138		
Ammonia as NH3	ppm	<10		
Chloride		6910		
Nitrate as N		<10		
Sulfate		<0.53		

MERCURY	ng/ml	7.0

Note: All units mg/L unless specified

CONSOL ENERGY INC.
RESEARCH & DEVELOPMENT
ANALYTICAL LABORATORY
SOUTH PARK, PENNSYLVANIA 15129

TO: S. TSENG

PROJECT NUMBER 1621-87 -

DATE LOGGED 09/10/04
DATE COMPLETED / /

DESCRIPTION FGD MAKEUP WATER (PLANT NO. 10 UNIT #2
COMMENTS TEST 2
SAMPLE NUMBER 2
ANALYTICAL NUMBER 044619

ANALYSIS	UNITS	WATER ANALYSIS VALUE	VALUE	DUP AVG
Calcium		71.4		
Total Iron		0.20		
Magnesium		5440		
Potassium		160		
Sodium		140		
Ammonia as NH3	ppm	<10		
Chloride		5350		
Nitrate as N		<10		
Sulfate		<0.53		
MERCURY	ng/ml	3.6		

Note: All units mg/L unless specified

CONSOL ENERGY INC.
RESEARCH & DEVELOPMENT
ANALYTICAL LABORATORY
SOUTH PARK, PENNSYLVANIA 15129

TO: S. TSENG

PROJECT NUMBER 1621-87 -

DATE LOGGED 09/10/04
DATE COMPLETED / /

DESCRIPTION FGD MAKEUP WATER PLANT NO. 10 √ UNIT #2
COMMENTS TEST 3
SAMPLE NUMBER 3
ANALYTICAL NUMBER 044620

		WATER ANALYSIS		
ANALYSIS	UNITS	VALUE	VALUE	DUP AVG
Calcium		69.9		
Total Iron		0.24		
Magnesium		4860		
Potassium		156		
Sodium		140		
Ammonia as NH3	ppm	<10		
Chloride		4800		
Nitrate as N		<10		
Sulfate		<0.53		
MERCURY	ng/ml	2.2		

Note: All units mg/L unless specified

CONSOL ENERGY INC.
RESEARCH & DEVELOPMENT
ANALYTICAL LABORATORY
SOUTH PARK, PENNSYLVANIA 15129

TO: S. TSENG

PROJECT NUMBER 1621-87 -

DATE LOGGED 09/10/04
DATE COMPLETED / /

DESCRIPTION FGD MAKEUP WATER PLANT NO. 10 √ UNIT #2
COMMENTS TEST 4
SAMPLE NUMBER 4
ANALYTICAL NUMBER 044621

ANALYSIS	UNITS	WATER ANALYSIS VALUE	VALUE	DUP AVG
Calcium		71.0		
Total Iron		0.28		
Magnesium		4930		
Potassium		164		
Sodium		142		
Ammonia as NH3	ppm	<10		
Chloride		5850		
Nitrate as N		INT		
Sulfate		<0.53		
MERCURY	ng/ml	4.4		

Note: All units mg/L unless specified

CONSOL ENERGY INC.
RESEARCH & DEVELOPMENT
ANALYTICAL LABORATORY
4000 BROWNSVILLE ROAD, SOUTH PARK, PA 15129

DESCRIPTION *TRONA TEST 1*
PLANT NO. 10 √ *UNIT 2*
DATE SAMPLED *08/31/04*
SAMPLE NUMBER 1

DATE LOGGED *09/10/04*
DATE COMPLETED *09/21/04*
PROJECT NUMBER *1621-87 -*
ANALYTICAL NUMBER 044638

ANALYSIS REPORT

PROXIMATE	(Dry)%
Ash	96.75
Total Sulfur	0.02

MISC. (As Det.)

Hg	<0.004	PPM

ULTIMATE	(Dry)%
Carbon	12.53
Chlorine	0.153
Ash	96.75

MAJOR ASH ELEM	(Dry)%
SiO2	2.00
Al2O3	0.35
TiO2	0.01
Fe2O3	0.15
CaO	0.76
MgO	0.65
Na2O	46.15
K2O	0.18
P2O5	0.03
SO3	0.06
UND	49.66

AS DETERMINED MOISTURE: 28.08 %

DISTRIBUTION:
S. TSENG

Approved for transmittal _____

CONSOL ENERGY INC.
RESEARCH & DEVELOPMENT
ANALYTICAL LABORATORY
4000 BROWNSVILLE ROAD, SOUTH PARK, PA 15129

DESCRIPTION *TROMA TEST 2*
PLANT NO. 10 / *UNIT 2*

DATE SAMPLED *09/01/04*
SAMPLE NUMBER 2

DATE LOGGED *09/10/04*
DATE COMPLETED *09/21/04*
PROJECT NUMBER *1621-87 -*
ANALYTICAL NUMBER 044639

ANALYSIS REPORT

PROXIMATE	(Dry)%
Ash	96.88
Total Sulfur	0.04

MISC. (As Det.)		
Hg	<0.004	PPM

ULTIMATE	(Dry)%
Carbon	12.51
Chlorine	0.139
Ash	96.88

MAJOR ASH ELEM	(Dry)%
SiO2	2.15
Al2O3	0.43
TiO2	0.01
Fe2O3	0.18
CaO	0.96
MgO	0.69
Na2O	46.99
K2O	0.21
P2O5	0.04
SO3	0.10
UND	48.24

AS DETERMINED MOISTURE: 28.00 %

DISTRIBUTION:
S. TSENG

Approved for transmittal _____

CONSOL ENERGY INC.
RESEARCH & DEVELOPMENT
ANALYTICAL LABORATORY
4000 BROWNSVILLE ROAD, SOUTH PARK, PA 15129

DESCRIPTION *TRONA TEST 3*
PLANT NO. 10 *√ UNIT 2*
DATE SAMPLED *09/01/04*
SAMPLE NUMBER 3

DATE LOGGED *09/10/04*
DATE COMPLETED *09/21/04*
PROJECT NUMBER *1621-87 -*
ANALYTICAL NUMBER **044640**

ANALYSIS REPORT

PROXIMATE	(Dry)%
Ash	96.83
Total Sulfur	0.04

MISC. (As Det.)		
Hg	<0.004	PPM

ULTIMATE	(Dry)%
Carbon	12.53
Chlorine	0.140
Ash	96.83

MAJOR ASH ELEM	(Dry)%
SiO2	1.85
Al2O3	0.35
TiO2	0.01
Fe2O3	0.14
CaO	0.93
MgO	0.68
Na2O	46.50
K2O	0.19
P2O5	0.03
SO3	0.10
UND	49.22

AS DETERMINED MOISTURE: 28.07 %

DISTRIBUTION:
S. TSENG

Approved for transmittal _____

CONSOL ENERGY INC.
RESEARCH & DEVELOPMENT
ANALYTICAL LABORATORY
4000 BROWNSVILLE ROAD, SOUTH PARK, PA 15129

DESCRIPTION *TRONA TEST 4*
PLANT NO. 10 *1 UNIT 2*
DATE SAMPLED *09/02/04*
SAMPLE NUMBER 4

DATE LOGGED *09/10/04*
DATE COMPLETED 09/21/04
PROJECT NUMBER 1621-87 -
ANALYTICAL NUMBER 044641

ANALYSIS REPORT

PROXIMATE	(Dry)%
Ash	96.89
Total Sulfur	0.03

MISC. (As Det.)		
Hg	<0.004	PPM

ULTIMATE	(Dry)%
Carbon	12.52
Chlorine	0.164
Ash	96.89

MAJOR ASH ELEM	(Dry)%
SiO2	1.81
Al2O3	0.36
TiO2	0.01
Fe2O3	0.14
CaO	0.94
MgO	0.67
Na2O	46.42
K2O	0.21
P2O5	0.03
SO3	0.07
UND	49.34

AS DETERMINED MOISTURE: 28.01 %

DISTRIBUTION:
S. TSENG

Approved for transmittal _____

CONSOL ENERGY INC.
RESEARCH & DEVELOPMENT
ANALYTICAL LABORATORY
SOUTH PARK, PENNSYLVANIA 15129

TO: S. TSENG

PROJECT NUMBER 1621-87 -

DATE LOGGED 09/10/04
DATE COMPLETED / /

DESCRIPTION 40% UREA SOLUTION PLANT NO. 10 | UNIT #2
COMMENTS TEST 1
SAMPLE NUMBER 1
ANALYTICAL NUMBER 044612

		WATER ANALYSIS		
ANALYSIS	UNITS	VALUE	VALUE	DUP AVG
Calcium		2.22		
Total Iron		0.89		
Magnesium		<0.53		
Potassium		<5.35		
Sodium		55.9		
Ammonia as NH3		1.67		
Chloride		500		
MERCURY	ng/ml	<1.0		

Note: All units mg/L unless specified

CONSOL ENERGY INC.
RESEARCH & DEVELOPMENT
ANALYTICAL LABORATORY
SOUTH PARK, PENNSYLVANIA 15129

TO: S. TSENG

PROJECT NUMBER 1621-87 -

DATE LOGGED 09/10/04
DATE COMPLETED / /

DESCRIPTION 40% UREA SOLUTION PLANT NO. 10 I UNIT #2
COMMENTS TEST 2
SAMPLE NUMBER 2
ANALYTICAL NUMBER 044613

		-------- WATER ANALYSIS ---------		
ANALYSIS	UNITS	VALUE	VALUE	DUP AVG
Calcium		1.81		
Total Iron		<0.53		
Magnesium		<0.53		
Potassium		<5.35		
Sodium		49.4		
Ammonia as NH3		1.65		
Chloride		500		
MERCURY	ng/ml	<1.0		

Note: All units mg/L unless specified

CONSOL ENERGY INC.
RESEARCH & DEVELOPMENT
ANALYTICAL LABORATORY
SOUTH PARK, PENNSYLVANIA 15129

TO: S. TSENG

PROJECT NUMBER 1621-87 -

DATE LOGGED 09/10/04
DATE COMPLETED / /

DESCRIPTION 40% UREA SOLUTION PLANT NO. 10 \ UNIT #2
COMMENTS TEST 3
SAMPLE NUMBER 3
ANALYTICAL NUMBER 044614

		WATER ANALYSIS		
ANALYSIS	UNITS	VALUE	VALUE	DUP AVG
Calcium		1.73		
Total Iron		0.97		
Magnesium		0.63		
Potassium		<5.35		
Sodium		46.1		
Ammonia as NH3		1.66		
Chloride		500		
MERCURY	ng/ml	<1.0		

Note: All units mg/L unless specified

CONSOL ENERGY INC.
RESEARCH & DEVELOPMENT
ANALYTICAL LABORATORY
SOUTH PARK, PENNSYLVANIA 15129

TO: S. TSENG

PROJECT NUMBER 1621-87 -

DATE LOGGED 09/10/04
DATE COMPLETED / /

DESCRIPTION 40% UREA SOLUTION (PLANT NO. 10 UNIT #2
COMMENTS TEST 4
SAMPLE NUMBER 4
ANALYTICAL NUMBER 044615

		..... WATER ANALYSIS		
ANALYSIS	UNITS	VALUE	VALUE	DUP AVG
Calcium		1.89		
Total Iron		<0.53		
Magnesium		0.64		
Potassium		<5.35		
Sodium		49.7		
Ammonia as NH3		1.68		
Chloride		500		
MERCURY	ng/ml	<1.0		

Note: All units mg/L unless specified