EVALUATION OF MERCURY EMISSIONS FROM COAL-FIRED FACILITIES WITH SCR AND FGD SYSTEMS

Topical Report No. 5

U.S. DOE NETL Cooperative Agreement DE-FC26-02NT41589

Issued: August 2005

J. A. Withum
S. C. Tseng
J. E. Locke

CONSOL Energy Inc.,
Research & Development
4000 Brownsville Rd.
South Park, PA 15129
(412) 854-6600

DISCLAIMER

This report was prepared as an account of work sponsored by an agency of the United States Government. Neither the United States Government nor any agency thereof, nor any of their employees, makes any warranty, express or implied, or assumes any legal liability or responsibility for the accuracy, completeness, or usefulness of any information, apparatus, product, or process disclosed, or represents that its use would not infringe privately owned rights. Reference herein to any specific commercial product, process, or service by trade name, trademark, manufacturer, or otherwise does not necessarily constitute or imply its endorsement, recommendation, or favoring by the United States Government or any agency thereof. The views and opinions of authors expressed herein do not necessarily state or reflect those of the United States Government or any agency thereof.

ABSTRACT

CONSOL Energy Inc., Research & Development (CONSOL), with support from the U.S. Department of Energy, National Energy Technology Laboratory (DOE) is evaluating the effects of selective catalytic reduction (SCR) on mercury (Hg) capture in coal-fired plants equipped with an electrostatic precipitator (ESP) - wet flue gas desulfurization (FGD) combination or a spray dyer absorber – fabric filter (SDA-FF) combination. In this program CONSOL is determining mercury speciation and removal at 10 coal-fired facilities. The objectives are 1) to evaluate the effect of SCR on mercury capture in the ESP-FGD and SDA-FF combinations at coal-fired power plants, 2) evaluate the effect of catalyst degradation on mercury capture; 3) evaluate the effect of low load operation on mercury capture in an SCR-FGD system, and 4) collect data that could provide the basis for fundamental scientific insights into the nature of mercury chemistry in flue gas, the catalytic effect of SCR systems on mercury speciation and the efficacy of different FGD technologies for mercury capture.

This document, the fifth in a series of topical reports, describes the results and analysis of mercury sampling performed on a 640 MW unit burning a bituminous coal containing 3.8 percent sulfur. The unit is equipped with a SCR, ESP, and magnesium-enhanced lime based wet FGD to control NO_x, particulate, and SO_2 emissions, respectively. Four sampling tests were performed in July 2004. Flue gas mercury speciation and concentrations were determined at the SCR inlet, air heater outlet (ESP inlet), and at the stack (FGD outlet) using the Ontario Hydro method. Process stream samples for a mercury balance were collected to coincide with the flue gas measurements.

The results show that the SCR/air heater combination converted 96% of the elemental mercury to the oxidized and particulate forms. Mercury removal, on a coal-to-stack basis, was 87%. The mercury material balance closures for the four tests ranged from 89% to 105%, with an average of 99%.

These results show that the SCR had a positive effect on mercury oxidation. In earlier programs, CONSOL sampled mercury at six plants with wet FGDs for SO_2 control without SCR catalysts. At those plants, an average of 61±15% of the mercury was in the oxidized and particulate forms at the air heater outlet, and the average coal-to-stack mercury removal was 66±8%.

The principal purpose of this work is to develop a better understanding of the potential mercury removal "co-benefits" achieved by NOx, and SO_2 control technologies. It is expected that this data will provide the basis for fundamental scientific insights into the nature of mercury chemistry in flue gas, the catalytic effect of SCR systems on mercury speciation and the efficacy of different FGD technologies for mercury capture. Ultimately, this insight could help to design and operate SCR and FGD systems to maximize mercury removal.

TABLE OF CONTENTS

Page

ABSTRACT ii
INTRODUCTION 1
HOST UTILITY DESCRIPTION 1
MERCURY SAMPLING RESULTS 2
- I. Test Matrix 2
- II. Flue Gas Mercury Sampling Results 3
  - A. SCR Inlet 3
  - B. Air Heater Outlet 4
  - C. Stack 4
- III. SCR/FGD System Hg Removal 5
- IV. Mercury Material Balance 5

EXPERIMENTAL AND SAMPLING METHODS 6
- I. Flue Gas Sampling Locations and Sampling Points 6
  - A. SCR Inlet 7
  - B. Air Heater Outlet (ESP Inlet) 7
  - C. Stack (FGD Outlet) 7
- II. Flue Gas Mercury Measurements 8
- III. Coal Sampling and Analysis 9
  - A. Coal Samples 9
  - B. Summary of the Results of Coal Analyses 10
- IV. Process Sample Collection 11
  - A. Bottom Ash 12
  - B. Lime Slurry Samples 12
  - C. ESP Hopper Ash Samples 12
  - D. FGD Slurry 12
  - E. FGD Make-up Water Samples 12
  - F. Centrate Return Samples 12
- V. Process Sample Analyses 13
  - A. Bottom Ash Samples 13
  - B. Lime Slurry Samples 14
  - C. ESP Hopper Ash Samples 16
  - D. FGD Slurry 19
  - E. FGD Makeup Water Samples 23
  - F. Centrate Return Samples 23

QUALITY ASSURANCE/QUALITY CONTROL 25
- I. Blank Samples 25
- II. NIST SRM Checks 26
- III. Spike Sample Recoveries 26
- IV. Duplicate Analyses 26
- V. Flue Gas Mercury Concentration Detection Limits 26
- VI. Mercury Material Balance Closure 27
  - A. Mercury input from coal 28
  - B. Mercury Input from Lime Slurry 28
  - C. Mercury Input from Centrate Return 29

D. Mercury Input from FGD Makeup Water 29
E. Mercury Output via Bottom Ash..... 30
F. Mercury Output via ESP Hopper Ash 30
G. Mercury Output via FGD Slurry..... 31
H. Mercury Output via Stack Flue Gas..... 33
I. Mercury Material Balance Closure..... 33
J. Material Balance Closure for SiO_2, Al_2O_3 and CaO 34
K. SO2 removal by FGD 36

LIST OF FIGURES

Page
Figure 1. Results of Mercury speciation by location and test number. 37
Figure 2. Process flow schematic and sampling locations 38
Figure 3. SCR inlet mercury sampling train..... 39
Figure 4. Air heater outlet mercury sampling location. 40
Figure 5. Stack mercury sampling location..... 40
Figure 6. Ontario Hydro sampling train schematic. 41
Figure 7. Coal sampling at coal pipe No. 1F1. 42
Figure 8. Bottom ash sampling location. 42
Figure 9. Lime slurry sampling location..... 43
Figure 10. Layout of ESP ash hoppers..... 44
Figure 11. ESP hopper ash sampling location. 44
Figure 12. FGD slurry sampling location 45
Figure 13. FGD makeup water sampling location. 45
Figure 14. Centrate return sampling location 46

LIST OF TABLES

Page
Table 1. Coal-fired Facilities in Program 1
Table 2. Sampling Test Matrix.....2
Table 3. Flue Gas Hg Speciation at the SCR Inlet 3
Table 4. Flue Gas Hg Speciation at the Air Heater Outlet.....4
Table 5. Flue Gas Hg Speciation at the Stack.....4
Table 6. Flue Gas Mercury Removal.....5
Table 7. Material Balance for Mercury.....6
Table 8. Mercury Speciation by Train Component 8
Table 9. Coal Pipe Sampled.....10
Table 10. Analytical Summary of Coal Samples. 11
Table 11. Analytical Summary of Bottom Ash Solids Samples.....13
Table 12. Analytical Summary of Bottom Ash Liquid Samples.....14
Table 14. Analytical Results of Lime Slurry Filtrate Samples 16
Table 15. Analytical Summary of ESP Hopper Ash Samples.....17
Table 16. Detailed Results of Analyses of the ESP Hopper Ash Samples.....18
Table 17. Analytical Summary of FGD Slurry Solids Samples 19
Table 18. Analytical Summary of FGD Slurry Filtrate Samples.....20

Table 19. Detailed Results of Analyses of FGD Slurry Solids Samples. 21
Table 20. Detailed Results of Analyses of FGD Slurry Filtrate Samples. 22
Table 21. Analytical Summary of FGD Makeup Water Samples. 23
Table 22. Analytical Summary of Centrate Return Solids Samples.....24
Table 23. Analytical Summary of Centrate Return Filtrate Samples. 24
Table 24. NIST SRM Analyses.....26
Table 25. Flue Gas Mercury Detection Limits 27
Table 26. Mercury Input from Coal.....28
Table 27. Mercury Input from Lime Slurry 29
Table 28. Mercury Input via Centrate Return. 29
Table 29. Mercury Input via Centrate Return. 30
Table 30. Mercury Output via Bottom Ash.....30
Table 31. Mercury Output via ESP Ash.....31
Table 32. Mercury Output via FGD Slurry. 32
Table 33. Mercury Output via Stack Flue Gas.....33
Table 34. Summary of Mercury Material Balance Closure. 34
Table 35. Summary of Material Balance Closure for SiO_2.....35
Table 36. Summary of Material Balance Closure for Al_2O_3. 35
Table 37. Summary of Material Balance Closure for CaO.....36
Table 38. SO_2 Removal by FGD 36

LIST OF APPENDICES

APPENDIX A	Mercury Sampling Data	A-1
APPENDIX B	Plant Process Data	B-1
APPENDIX C	Flue Gas Hg Data	C-1
APPENDIX D	Process Material Data	D-1

LIST OF ABBREVIATIONS

acfm	-	actual cubic feet per minute (wet)
am	-	morning
Btu	-	heating value in British Thermal Units
Ca/S	-	Calcium-sulfur ratio
cfm	-	cubic feet per minute
CO_2	-	carbon dioxide
CONSOL R&D	-	CONSOL Energy Inc., Research and Development
CVAA	-	cold vapor atomic absorption
DI	-	deionized water
dscf	-	dry standard cubic feet
dscfm	-	dry standard cubic feet per minute
EPA	-	U.S. Environmental Protection Agency
ESP	-	electrostatic precipitator
FGD	-	wet flue gas desulphurization
ft	-	feet
ft^2	-	square feet
ft^3	-	cubic feet
g/mL	-	gram per milliliter
gm	-	grams
gpm	-	gallons per minute
gr	-	grains
HCl	-	hydrochloric acid
Hg	-	mercury
Hg^{part}	-	mercury in particulate form
Hg^{total}	-	total mercury in particulate, oxidized, and elemental forms
Hg^{++}	-	mercury in oxidized form
Hg^{o}	-	mercury in elemental form
HNO_3	-	nitric acid
H_2O	-	water
hr	-	hour
ICP-AES	-	inductively coupled plasma-atomic emission spectrometer
in	-	inch
KCl	-	potassium chloride
$KMnO_4$	-	potassium permanganate
kpph	-	thousand pound per hour
L	-	liter
lb	-	pound
m	-	meter
m^3	-	cubic meter
mg	-	milligram, 10^{-3} gram
min	-	minute
mL	-	milliliter
M	-	molar, mol/L

LIST OF ABBREVIATIONS (continued)

MM	-	million
mol	-	mole
ng	-	nanogram, 10^{-9} gram
N_2	-	molecular nitrogen
NIST	-	National Institute of Standards and Technology
NO	-	nitric oxide
NO_2	-	nitrogen dioxide
O_2	-	molecular oxygen
O_3	-	ozone
pm	-	afternoon
PM	-	particulate matter
ppb	-	parts per billion
ppm	-	parts per million
ppmv	-	parts per million by volume
PRSD	-	percent relative standard deviation
QA	-	quality assurance
QC	-	quality control
rpm	-	revolutions per minute
scf	-	standard cubic feet (68EF and 29.92"Hg)
scfm	-	standard cubic feet per minute
SRM	-	Standard Reference Material
temp	-	temperature
tph	-	tons per hour
wt	-	weight
v	-	volts
vs	-	versus
^{o}F	-	temperature in degrees Fahrenheit
<	-	less than
>	-	more than
µg	-	microgram, 10^{-6} gram

INTRODUCTION

The CONSOL Energy Inc., Research and Development (CONSOL R&D) is determining mercury speciation and removal at 10 coal-fired facilities with SCR/FGD combinations (Table 1). CONSOL R&D's Exploratory and Environmental Research Group conducted a series of flue gas mercury (Hg), measurements on Unit 1 at Site #9 during the week of July 19, 2004, under U.S. Department of Energy (DOE) Cooperative Agreement No. DE-FC26-02NT41589. The test program consisted of four sets of measurements across the combustion emission control system that consists of a selective catalytic reduction (SCR) unit, electrostatic precipitator (ESP), and flue gas desulfurization (FGD) system.

The mercury measurements were made using the Ontario-Hydro Flue Gas Hg Speciation Method at the SCR inlet, Air Heater Outlet (upstream from the ESP), and the Stack. The testing conducted by CONSOL R&D is documented in this report.

Table 1. Coal-fired Facilities in Program

Site #	MW	Air Pollution Control Devices	Coal	Ozone Unit
1	330	SCR / Spray Dryer / Baghouse	Bit	year round
2	245	SCR / Spray Dryer / Baghouse	Bit	year round
3	560	SCR / ESP/ Limestone FGD, natural oxidation	Bit	Yes
4 Unit 1	468	ESP/ Limestone FGD, natural oxidation	Bit	(1)
4 Unit 2	468	SCR / ESP/ Limestone FGD, natural oxidation	Bit	year round
5 Unit 1	1,300	SCR / ESP/ Limestone FGD, in-situ oxidation	Bit	Yes
5 Unit 2	1,300	ESP/ Limestone FGD, in-situ oxidation	Bit	(1)
6 (2)	544	SCR / ESP/ Limestone FGD, ex-situ oxidation	Bit	Yes
7 (2)	566	SCR / ESP/ Limestone FGD, ex-situ oxidation	Bit	Yes
8	684	SCR / ESP / Lime FGD, ex-situ oxidation	Bit	Yes
9	640	SCR / ESP/ Lime FGD, inhibited oxidation	Bit	Yes
10	1,300	SCR / ESP/ Lime FGD, inhibited oxidation	Bit	Yes

(1) SCR was not installed when tests were conducted.
(2) Tests were also conducted during non-ozone seasons while flue gases bypassed the SCR.

HOST UTILITY DESCRIPTION

Site #9 operates three 640 MW dry-bottom pulverized coal-fired generation units, each with an SCR unit, ESP, and magnesium-enhanced lime based wet FGD for controlling NOx, particulate matter, and sulfur dioxide emissions. Both the ESP and FGD have to be operated whenever the boilers are in operation. However, the SCR is operated only during the ozone season. The plant typically burns bituminous coal containing three to four percent sulfur.

Tests were conducted on Unit 1, which is equipped with a corrugated plate type SCR catalysts, installed since 2002. Anhydrous ammonia is injected into the flue gas upstream of the catalyst beds. Nitrogen oxides (NOx) in the flue gas reacts with ammonia over the catalyst surfaces and is converted into nitrogen and water. Fly ash particles are removed from the flue gas by the ESP and collected in 32 hoppers arranged in two electric fields. Each field has 16 hoppers. This unit is equipped with only one spray-tower type scrubber module designed for 98 percent sulfur dioxide reduction. Slaked magnesium-enhanced lime slurry is introduced into the scrubber to neutralize the acidified liquor. Emulsified sulfur is added to the lime slaker to produce thiosulfate ions *in-situ* inside the scrubbing liquor to inhibit the oxidation of the dissolved sulfite ions, which are responsible for the removal of sulfur dioxide present in the flue gas entering the scrubber. Blowdown from the scrubber is sent to a thickener. The thickener underflow is further dewatered by centrifuges. The centrifuge filtrate (or Centrate Return as described by the plant personnel) is pumped back into the scrubber. Fresh water is blended with the thickener overflow and pumped back to the scrubber as level makeup. Fresh water (i.e., ME Wash Water) is sprayed onto the mist eliminators to remove any residual FGD slurry solids adhering to the mist eliminators.

MERCURY SAMPLING RESULTS

I. Test Matrix

The mercury measurements consisted of a total of four tests over three days. The test matrix is shown in Table 2.

Table 2. Sampling Test Matrix

Date	Activity	Flue Gas Sampling			Process Sampling						
		SCR Inlet	Air Heater Outlet	Stack	Coal	Bottom Ash	ESP Ash	Lime Slurry	FGD Slurry	Centrate Return	FGD Makeup
7/19	Arrive, Setup	---	---	---	---	---	---	---	---	---	---
7/20	Setup, Test 1	X	X	X	X	X	X	X	X	X	X
7.21	Test 2	X	X	X	X	X	X	X	X	X	X
	Test 3	X	X	X	X	X	X	X	X	X	X
7/22	Test 4	X	X	X	X	X	X	X	X	X	X
	Pack, Demobilize	---	---	---	---	---	---	---	---	---	---

A total of twelve flue gas mercury measurements were conducted using ASTM Method D-6784-02 (Ontario Hydro Method). Mercury measurements were a maximum of 120 minutes in duration. To calculate the material balance, CONSOL R&D and plant personnel obtained process samples simultaneously during the gas sampling periods. Process samples were collected consisting of: coal, bottom ash, ESP ash, lime slurry, FGD slurry, Centrate Return, and FGD makeup water.

Details of sampling conditions are provided later in this report. Laboratory analyses were performed by CONSOL R&D and are included in this report.

II. Flue Gas Mercury Sampling Results

Figure 1 summarizes the results of mercury speciation for the four tests at each location. All tests were conducted isokinetically. Mercury flow rates for each location were calculated based on flue gas flow rates measured at the stack location, corrected to the specific location's oxygen concentration. A complete listing of mercury analyses is in Appendix C. The results at each location are discussed below.

A. SCR Inlet

Four mercury measurements were conducted at the SCR inlet location. Table 3 summarizes the results of mercury measurements at the SCR inlet. The average concentrations of the gas phase oxidized and elemental mercury were 2.25 and 9.68 µg/m^3, respectively. The average concentration of total mercury measured at this location was 12.0 µg/m^3 and the average mass flow rate of Hg was 9.02 mg/sec.

The results show that more than 99% of the mercury was in the gas phase. The high percentage of gas phase mercury is expected due to the gas temperature (654°F) at this location. Eight-one percent (9.68/12.0) of the total mercury was in the elemental form.

Table 3. Flue Gas Hg Speciation at the SCR Inlet

Date	Test No.	Hg Concentration, µg/m^3 (dry std conditions)				Hg Flow, mg/sec			
		Hg^{part}	Hg^{++}	Hg^{0}	Hg^{total}	Hg^{part}	Hg^{++}	Hg^{0}	Hg^{total}
7/20	1	0.03	1.43	12.0	13.5	0.02	1.10	9.29	10.4
7/21	2	0.04	1.76	9.15	11.0	0.03	1.40	7.28	8.71
7/21	3	0.03	3.35	8.30	11.7	0.02	2.42	6.00	8.45
7/22	4	0.03	2.45	9.24	11.7	0.02	1.78	6.71	8.52
	Average	0.03	2.25	9.68	12.0	0.02	1.68	7.32	9.02
	Standard Deviation	0.01	0.85	1.61	1.07	0.005	0.57	1.41	0.93
	PRSD	15.4	37.8	16.6	8.9	22.2	34.0	19.3	10.3

B. Air Heater Outlet

Four mercury measurements were conducted at the Air Heater outlet location. Table 4 summarizes the results of mercury measurements. The majority (88%) of the mercury was vapor-phase Hg^{++}. The average concentrations of the particulate-bound, oxidized, and elemental mercury measured at this location were 0.89, 9.03, and 0.39 µg/m^3, respectively. The average concentration of total mercury was 10.3 µg/m^3 and the average flow rate of Hg was 7.39 mg/sec.

Table 4. Flue Gas Hg Speciation at the Air Heater Outlet

Date	Test No.	Hg Concentration, µg/m^3 (dry std conditions)				Hg Flow, mg/sec			
		Hg^{part}	Hg^{++}	Hg^{0}	Hg^{total}	Hg^{part}	Hg^{++}	Hg^{0}	Hg^{total}
7/20	1	0.87	11.2	0.44	12.5	0.62	7.98	0.31	8.92
7/21	2	1.20	9.25	0.24	10.7	0.84	6.49	0.17	7.50
7/21	3	0.72	8.30	0.42	9.45	0.55	6.34	0.32	7.21
7/22	4	0.75	7.37	0.47	8.59	0.52	5.09	0.33	5.93
	Average	0.89	9.03	0.39	10.3	0.63	6.48	0.28	7.39
	Standard Deviation	0.22	1.64	0.10	1.70	0.14	1.18	0.08	1.23
	PRSD	24.8	18.1	26.4	16.5	22.9	18.3	26.7	16.6

C. Stack

Four mercury measurements were conducted at the Stack. Table 5 summarizes the results of mercury measurements. The average concentrations of the particulate-bound, oxidized and elemental mercury measured at this location were 0.002, 0.80, and 0.27 µg/m^3, respectively. The average concentration of total mercury was 1.07 µg/m^3 and the average mass flow rate of Hg was 0.88 mg/sec.

Table 5. Flue Gas Hg Speciation at the Stack

Date	Test No.	Hg Concentration, µg/m^3 (dry std conditions)				Hg Flow, mg/sec			
		Hg^{part}	Hg^{++}	Hg^{0}	Hg^{total}	Hg^{part}	Hg^{++}	Hg^{0}	Hg^{total}
7/20	1	0.002	0.87	0.20	1.07	0.002	0.72	0.16	0.88
7/21	2	0.002	1.03	0.30	1.33	0.002	0.85	0.24	1.09
7/21	3	0.002	0.85	0.25	1.11	0.002	0.71	0.21	0.92
7/22	4	0.002	0.46	0.32	0.78	0.002	0.36	0.25	0.62
	Average	0.002	0.80	0.27	1.07	0.002	0.66	0.22	0.88
	Standard Deviation	1.47×10^{-5}	0.24	0.05	0.23	3.66×10^{-5}	0.21	0.04	0.19
	PRSD	0.6	30.2	20.1	21.1	2.0	31.8	18.8	22.1

III. SCR/FGD System Hg Removal

Table 6 summarizes the flue gas mercury removal across the SCR/FGD system. The average mercury removal was 88 percent, as measured between the air heater outlet and the stack. The average coal-to-stack Hg removal was 87 percent.

Table 6. Flue Gas Mercury Removal

Date	Test No.	System Mercury Reduction					
		Ontario Hydro Results, mg Hg^{total} /sec			Coal Feed Based Reduction, mg Hg^{total} /sec		
		Air Heater Outlet	Stack Emissions	% Reduction	Coal Feed	Stack Emissions	% Reduction
7/20	1	8.92	0.88	90.1	7.98	0.88	89.0
7/21	2	7.50	1.09	85.5	6.75	1.09	83.9
7/21	3	7.21	0.92	87.2	6.08	0.92	84.9
7/22	4	5.93	0.62	89.5	5.76	0.62	89.2
Average		7.39	0.88	88.1	6.64	0.88	86.8
Standard Deviation		1.23	0.19	2.12	0.98	0.19	2.75
PRSD		16.6	22.1	2.4	14.8	22.1	3.2

IV. Mercury Material Balance

An important criterion to gauge the overall quality of the tests is to conduct a mass balance to account for the mercury entering and leaving the plant during the tests. The mercury material balance closure is the total mercury output from the plant divided by the total mercury input (expressed as %). The total mercury input is the sum of the amounts of mercury in the coal and lime slurry entering the plant. The total mercury output is the sum of the amounts of mercury leaving the plant through bottom ash, baghouse hopper ash, and stack flue gas. Table 7 shows the mercury material balance closure for the four tests conducted at the plant. The calculated mercury material balance closures ranged from 89% to 105%. The material balance closures for mercury for all four tests are within the QA/QC criterion of 70-130% for a single test and the average value is 99%, which is within the QA/QC criterion of 80-120% for multiple tests. The measurements, calculations, and assumptions for calculating the material balances are described later in this report.

Table 7. Material Balance for Mercury.

Test No.	1	2	3	4
Hg input from Coal (mg/sec)	7.98	6.75	6.08	5.76
Hg input from lime slurry (mg/sec)	0.67	0.30	0.03	0.02
Hg input from centrate return stream (mg/sec)	0.98	0.99	0.98	0.94
Hg input from FGD make-up water (mg/sec)	0.01	0.04	0.06	0.10
Hg input to the system (mg/sec)	**9.64**	**8.07**	**7.15**	**6.82**
Hg output from bottom ash (mg/sec)	0.01	0.01	0.01	0.01
Hg output from ESP hopper ash (mg/sec)	0.48	0.53	0.40	0.60
Hg output from FGD slurry (mg/sec)	7.19	6.72	6.15	5.44
Hg output from stack gas (mg/sec)	0.88	1.09	0.92	0.62
Hg output from the system (mg/sec)	**8.55**	**8.35**	**7.48**	**6.66**
Hg material balance closure	**89%**	**103%**	**105%**	**98%**
Average Hg Material Balance	**99 ± 7%**			

EXPERIMENTAL AND SAMPLING METHODS

CONSOL R&D performed flue gas mercury determinations using the Ontario-Hydro sampling method. As a quality assurance/quality control (QA/QC) measure, samples of the coal, bottom ash, FGD slurry, limestone slurry, and ESP ash, were taken to determine a mercury balance across the system.

I. Flue Gas Sampling Locations and Sampling Points

Three sampling locations, the SCR inlet, air heater outlet (upstream of the ESP), and stack outlet, were tested. Figure 2 is a flow schematic indicating the sampling locations on this unit.

Flue gas exits the economizer through two ducts (designated Ducts A and B) and passes through the SCR, air heater, and ESP before converging into a single gas stream at through the FGD and stack.

A. SCR Inlet

Figure 3 is a photograph of the SCR inlet sampling location. The SCR inlet consists of two vertical, rectangular ducts, each measuring 13-feet, 3-inches deep by 30-feet, 2-inches wide. Each duct has six sample ports spaced across the face the duct.

Preliminary pitot surveys conducted on July 19, 2004, indicated that the gas flow was laminar in all ports. Each duct was sampled through two test ports. In each port, three points were sampled for ten minutes each. Total test duration was 120 minutes. Mercury measurements were conducted with the sampling nozzle oriented parallel to and directly into the flow.

Four mercury measurements were performed at the SCR inlet. The sample train was prepared in EPA Method 17 configuration using an in-stack 19 mm x 90 mm quartz-fiber thimble filter. The filter apparatus was attached to a heated probe that was connected to the impinger train with glass filter-bypass in the heated filter box. Figure 3 also shows the mercury sampling train on the SCR inlet. Mercury measurements were conducted isokinetically.

B. Air Heater Outlet (ESP Inlet)

Figure 4 is a photograph of the air heater outlet sampling location. The air heater outlet duct consists of two ducts, each approximately 6 feet deep and 79-feet, 8 inches wide. Four test ports are located across the top of each duct; however, an oxygen monitor is installed in each port. One port in each duct was made accessible by removing the monitor for testing. Preliminary pitot surveys conducted on July 19, 2004, indicated that the gas flow was laminar.

Each duct was sampled through a single test port at a single point. Each duct was sampled for 60 minutes, for a total test time of 120 minutes. Mercury measurements were conducted with the sampling nozzle oriented parallel to and directly into the flow.

Four mercury measurements were performed at the air heater outlet. The sample train was prepared in EPA Method 17 configuration using an in-stack 19 mm x 90 mm quartz-fiber thimble filter. The filter apparatus was attached to a heated probe that was connected to the impinger train with a flexible heated Teflon sample line. Mercury measurements were conducted isokinetically.

C. Stack (FGD Outlet)

Figure 5 is a photograph of the stack sampling location. The stack is approximately 26 feet in diameter. Three traverse points were sampled in each of four sampling ports for a total of twelve sampling points per test.

Four 120-minute sample runs were performed at the stack sampling location. A standard EPA Method 5 sample train configuration was utilized for this location.

The results of preliminary pitot surveys conducted on July 20, 2004 indicated that the gas flow was laminar. Mercury measurements were conducted with the nozzle oriented horizontally, directly into the flow. Hg measurements were conducted isokinetically.

II. Flue Gas Mercury Measurements

Flue gas mercury measurements were obtained using the Ontario-Hydro Hg speciation train. The sampling train schematic is shown in Figure 6.

Flue gas was extracted from the flue gas stream and pulled through a heated glass-lined probe and quartz filter. Total particulate matter mass loading was calculated from the solids collected prior to and on the filter. Probe temperatures were set at 325 ± 25 °F at the SCR inlet and air heater outlet. Probe and filter temperatures were maintained at 248 ± 25 °F at the stack. Where particle loading was high, the probe and filter were maintained as close as practical to the flue gas temperature.

Mercury collected prior to and on the filter is assumed to be particulate Hg (Hg^{part}). The flue gas exits the quartz filter and passes through a series of chilled impingers. The first three impingers are filled with 100 mL of a 1M-potassium chloride (KCl) solution. It is assumed these impingers capture oxidized forms of mercury in the flue gas (Hg^{++}). The next impinger is filled with 100 mL of a 5% nitric acid and 10% H_2O_2 solution. The purpose of this impinger is to remove SO_2 from the flue gas to preserve the oxidizing strength of the permanganate impingers. Mercury collected in this impinger is assumed to be the elemental form (Hg^0). The next two impingers are filled with 100 mL of an acidic potassium permanganate ($KMnO_4$) solution. It is assumed that these impingers collect elemental mercury (Hg^0). The next impinger is blank to catch any excess moisture. The gas exits the impinger train through a silica gel-filled impinger that removes the moisture from the flue gas. The mercury species collected by the Ontario-Hydro sampling train component are listed in Table 8.

Table 8. Mercury Speciation by Train Component

Train Component	Species Measured
Probe & Nozzle Rinse	Hg^{part}
Quartz Filter	Hg^{part}
KCl Impingers	Hg^{++}
HNO_3/H_2O_2 Impinger	Hg^0
$KMnO_4$ Impingers	Hg^0
HCl Rinse of $KMnO_4$ Impingers	Hg^0

The absorbing solutions were made fresh daily. The impingers were charged and the sampling components were transported to the required locations. The sampling trains were assembled, pre-heated, and checked for pitot and sample line leaks as detailed in EPA Methods 2 and 5, respectively. After passing the leak-check procedure, the sampling probes were inserted into their respective ducts, in-stack filters were allowed to heat to stack temperature, and sampling was initiated. Leak checks were also performed during port changes.

Oxygen readings were monitored at the outlet of the sampling train using a Teledyne Model Max 5 portable analyzer (electrochemical O_2 sensor). At the completion of the sampling period, the sample trains were checked for leaks, purged for 10 min, and then disassembled. The components were transported back to the lab trailer for recovery. The mercury concentration of the individual impinger solutions was determined by cold vapor atomic absorption (CVAA) as specified in the methodology. The concentration of mercury on the solids was determined by acid digestion followed by CVAA.

The amount of mercury collected in the impinger solutions was determined as outlined in EPA Method 29 and the Ontario-Hydro Draft Method. An aliquot of the impinger solution is acidified and the mercury is determined using cold vapor-atomic absorption spectroscopy. The atomic absorption spectrometer is calibrated with commercial mercury standard. The calibration is verified using NIST Standard 1641D. The calibration is reassessed periodically by analyzing a quality control standard. The instrument is recalibrated as required. Each sample matrix is analyzed as a set and an individual calibration curve is used for each set. Depending on sample type, selected samples are spiked with 2, 5, 10, or 15 ng/mL (ppb) of mercury and reanalyzed. Spike recovery must be within ±30% or the sample is diluted and reanalyzed. Selected samples are analyzed in duplicate. The duplicates must be within ±30% or the analyses are repeated.

Where sufficient solids were collected, particulate mercury was analyzed using a 0.5-1.0 gm ash sample. In cases where the particulate catch was low (primarily stack filters) the filter sample was digested. The samples were digested with aqua-regia in pressure vessels prior to analysis by CVAA.

III. Coal Sampling and Analysis

A. Coal Samples

Coal was sampled from six coal pipes in each test. There were six coal pulverizers in operation during the tests and the coal fines from each pulverizer entered the boiler through four steel pipes. The coal pipes sampled are listed in Table 9. The sampling device and procedures were provided by the plant. The device was normally used to sample coal for fineness determination. This device consisted of a steel pipe of one-inch in diameter and 36-inch in length. A cyclone of two-inch in diameter was welded to one end of this pipe. The other end of the pipe was cut to allow for a slot of ¼ inch in opening with the opening parallel to the diameter of the pipe. A one-gallon plastic bag was tied to the bottom the

cyclone to collect the pulverized coal samples. The coal was taken for one minute at each of the three locations inside each pipe, center, one-third radius from the center, and three-fourth radius from the center. Shown in Figure 7 is a photograph of this device sampling the coal at Coal Pipe No. 1F1.

Table 9. Coal Pipe Sampled

Test No.	Coal Pipe Sampled
1	1B1, 1B2, 1C3, 1D4, 1E2, 1F1
2	1A1, 1B2, 1C1, 1D4, 1E1, 1F1
3	1A1, 1B2, 1C1, 1D4, 1E1, 1F1
4	1A1, 1B2, 1C1, 1D4, 1E1, 1F1

B. Summary of the Results of Coal Analyses

Coal Samples were analyzed using a direct mercury analyzer according to the procedures of ASTM Method D6722. Detailed results of the coal analyses for each test are presented in Appendix D and summarized in Table 10.

Table 10. Analytical Summary of Coal Samples.

Sample ID	Coal-1	Coal-2	Coal-3	Coal-4
Test No.	1	2	3	4
Test Date	07/20/04	07/21/04	07/21/04	07/22/04
Sample Location	Coal Pipe	Coal Pipe	Coal Pipe	Coal Pipe
Analytical No.	20043569	20043570	20043571	20043572
Moisture (%, as det'd)	1.32	1.22	1.31	1.21
Ash (%, dry)	13.65	13.06	11.45	12.38
Volatile Matter (%, dry)	38.09	38.85	39.87	39.09
Heating Value (Btu/Ib, as det'd)	12,730	12,852	12,879	12,979
Heating Value (Btu/Ib, dry)	12,900	13,011	13,050	13,138
Total Sulfur (%, dry)	3.86	3.78	3.78	3.57
Total Carbon (%, dry)	71.48	71.85	73.44	72.74
Hydrogen (%, dry)	5.07	4.95	5.00	4.99
Nitrogen (%, dry)	1.24	1.22	1.27	1.26
Chlorine (%, dry)	0.05	0.05	0.05	0.05
Mercury (ppm, as det'd)	0.13	0.11	0.10	0.10
Major Ash Element (%, dry)				
SiO_2	44.7	45.3	44.18	45.98
Al_2O_3	19.08	19.53	19.72	20.1
TiO_2	0.8	0.82	0.83	0.83
Fe_2O_3	21.9	21.18	23	19.76
CaO	4.38	4.45	4.82	4.6
MgO	1.14	1.2	1.12	1.3
Na_2O	0.82	0.9	0.99	0.99
K_2O	2.28	2.31	2.14	2.25
P_2O_5	0.39	0.35	0.25	0.27
SO_3	4.58	4.64	3.77	4.86

IV. Process Sample Collection

CONSOL R&D and plant personnel collected samples of bottom ash, lime slurry, ESP hopper ash, FGD slurry, and FGD make-up water. CONSOL R&D completed comprehensive analyses using a direct mercury analyzer according to the procedures of ASTM Method D6722. Detailed results of the process material analyses are presented in Appendix D.

A. Bottom Ash

Bottom ash samples were taken at the end of each test by the plant operators. The samples were collected at the bottom ash chiller bunker. The samples were collected by loosening the hatch to the bunker to allow most of the hot water to run out. A five gallon bucket was then placed beneath the hatch. The hatch door was then fully opened to collect the bottom ash sample as shown in Figure 8.

B. Lime Slurry Samples

Shown in the photograph on left hand side of Figure 9 is the lime slurry storage vessel; and only a small section of the vessel is covered under the FGD building. The lime slurry sampling location is inside the building. The samples were collected at the end of a discharge hose attached to the lime slurry circulation pipe as shown in the photograph on the right hand side of Figure 9. One 500-mL of lime slurry sample was collected at the beginning of each test by a laboratory technician of the plant.

C. ESP Hopper Ash Samples

The layout of the ESP hoppers is shown in Figure 10. The ash collected inside the ESP hoppers discharges into the transfer pipes. There was an ash sampling device attached to each of the two ash transfer pipes, as shown by the photograph on the left-hand side of Figure 11, where ash samples were collected by manually activating the device. The ash was then retrieved from the transfer pipe into the plastic bag. See the photograph on the right-hand side of Figure 11.

D. FGD Slurry

The FGD (or scrubber) slurry was collected inside the FGD building for this unit. There was only one operating module. The FGD slurry was circulated through the sampling pipe as shown by the photograph on the left-hand side of Figure 12. A rubber hose was attached to this pipe. Before a slurry sample was taken, the slurry was allowed to flush into a metal container for approximately one minute. Two 500-mL slurry samples were collected during each test, at the end of this rubber hose, as shown by the photograph in the right-hand side of Figure 12. One sample was taken near the end of the first hour and another was taken near the end of the second hour of each test.

E. FGD Make-up Water Samples

The FGD blowdown was pumped to a thickener. The thickener overflow liquor was sent back to the FGD module as level makeup. During each test, a 500-mL sample of makeup water was collected inside the pump house near the thickener, as shown in Figure 13.

F. Centrate Return Samples

The thickener underflow liquor is pumped from the thickener to a dewatering building, where the liquor was concentrated by centrifuges. Solids from the centrifuges discharged onto a conveyor belt and are conveyed into an adjacent building to be fixiated with fly ash and lime for disposal. Liquids from the centrifuges are returned back to the FGD. During each test, a 500-mL sample of

the "*centrate return*" was collected in the pump house next to the centrate return storage tank. Shown in Figure 14 are a centrate return pump (Left) and the centrate return storage tank (right).

V. Process Sample Analyses

Solid samples were analyzed using a direct mercury analyzer, according to the procedures of ASTM D6722. Detailed results of the process material analyses are presented in Appendix D.

A. Bottom Ash Samples

Each bottom ash sample was filtered to generate a solids and liquid samples, which were analyzed separately. Tables 11 and 12 summarize the results of analyses of the bottom ash solids and liquid samples. The mercury content in the bottom ash solids was detected at a consistent concentration of 0.004 ppm. The concentration of mercury in the bottom ash liquids was below the detection limit of 1.0 µg/L.

Table 11. Analytical Summary of Bottom Ash Solids Samples.

Sample ID	Bottom Ash-1	Bottom Ash-2	Bottom Ash-3	Bottom Ash-4
Sample Date	7/20/2004	7/21/2004	7/21/2004	7/22/2004
Analytical No.	20043578	20043579	20043580	20043581
Moisture (%, as det'd)	0.11	0.06	0.05	0.06
Ash (%, dry)	100.13	100.35	100.46	100.13
Carbon (%, dry)	0.42	0.31	0.12	0.42
Chlorine (ppm, dry)	47	35	19	36
Hg (ppm, as det'd)	0.004	0.004	0.004	0.004
Major Ash Elements (%, dry)				
SiO_2	43.98	44.66	44.61	44.68
Al_2O_3	18.23	18.4	18.91	18.51
TiO_2	0.88	0.89	0.90	0.89
Fe_2O_3	27.87	27.65	27.46	27.06
CaO	4.44	4.41	4.48	4.42
MgO	1.08	1.13	1.19	1.16
Na_2O	0.65	0.77	0.91	0.81
K_2O	1.95	1.98	1.98	1.98
P_2O_5	0.28	0.20	0.15	0.17
SO_3	0.20	0.21	0.17	0.18

Table 12. Analytical Summary of Bottom Ash Liquid Samples.

Sample ID	Bottom Ash Liquid - 1	Bottom Ash Liquid - 2	Bottom Ash Liquid - 3	Bottom Ash Liquid - 4
Test No.	1	2	3	4
Sample Date	7/20/2004	7/21/2004	7/21/2004	7/22/2004
Analytical No.	20043606	20043607	20043608	20043609
Ca (μg/mL)	482	426	457	428
Total Iron (μg/mL)	0.37	0.37	0.14	0.20
Mg (μg/mL)	9.89	72.8	79.9	79.6
K (μg/mL)	17.6	15	14.9	14.4
Na (μg/mL)	141	152	153	191
Ammonia as NH_3 (μg/mL)	< 10	< 10	< 10	< 10
Cl (μg/mL)	337	276	272	309
NO_3 as N (μg/mL)	27.8	< 10	< 10	< 10
SO_4 (μg/mL)	1,320	1,430	1,540	1,480
Hg (μg/L)	< 1.0	< 1.0	< 1.0	< 1.0

B. Lime Slurry Samples

Each lime slurry sample was filtered to generate a solids (i.e., filter cake) sample and a filtrate sample. The dried solids and filtrate samples were analyzed separately. Listed in Tables 13 and 14 are the results of analyses of the lime slurry solids and filtrate samples, respectively. The mercury content in the lime slurry solids ranged from below the detection limit of 0.004 ppm to 0.009 ppm. The concentration of mercury in the lime slurry filtrates ranged from below the detection limit of 1.0 μg/L to 37.5 μg/L.

Table 13. Analytical Summary of Lime Slurry Solids Samples.

Sample ID	Lime Slurry - 1	Lime Slurry - 2	Lime Slurry - 3	Lime Slurry - 4
Sample Date	7/20/2004	7/21/2004	7/21/2004	7/22/2004
Ananlytical No.	20043590	20043591	20043592	20043593
% solids of original sample	24.4	23.8	24.3	24.2
Density of original sample (g/mL)	1.143	1.125	1.149	1.144
Residual moisture (%, as det'd)	0.96	0.83	0.96	0.86
Ash (%, dry)	74.41	73.89	74.10	74.08
Carbon (%, dry)	1.11	1.25	1.23	1.09
Total Sulfur (%, dry)	0.32	0.16	0.14	0.12
Chlorine (%, dry)	0.010	0.015	0.014	0.011
Hg (ppm, as det'd)	0.009	< 0.004	< 0.004	0.004
Major Ash Elements (%)				
SiO_2	1.81	1.53	1.74	1.28
Al_2O_3	0.32	0.30	0.29	0.29
TiO_2	0.02	0.01	0.01	0.01
Fe_2O_3	0.17	0.17	0.16	0.15
CaO	68.56	66.83	66.22	67.50
MgO	2.69	3.71	3.83	3.35
Na_2O	0.02	0.01	0.03	0.02
K_2O	0.02	0.02	0.03	0.02
P_2O_5	0.02	0.01	0.02	0.02
SO_3	0.81	0.40	0.36	0.30

Table 14. Analytical Results of Lime Slurry Filtrate Samples

Sample ID	Lime Slurry Filtrate -1	Lime Slurry Filtrate - 2	Lime Slurry Filtrate- 3	Lime Slurry Filtrate - 4
Sample Date	7/20/2004	7/21/2004	7/21/2004	7/22/2004
Test No.	1	2	3	4
Analytical No.	20043626	20043627	20043628	20043629
Ca (µg/mL)	1,330	926	898	897
Total Iron (µg/mL)	0.16	< 0.05	< 0.05	< 0.05
Mg (µg/mL)	2.3	0.36	0.4	0.31
K (µg/mL)	67.6	68.9	75.2	68.3
Na (µg/mL)	90.3	94.7	102	94.7
Ammonia as NH_3 (µg/mL)	< 10	< 10	< 10	< 10
Cl (µg/mL)	417	292	278	269
NO_3 as N (µg/mL)	< 10	< 10	< 10	< 10
SO_4 (µg/mL)	310	450	376	281
Hg (µg/L)	37.5	17.2	1.1	< 1.0

C. ESP Hopper Ash Samples

Table 15 summarizes the averages of each test's samples. Listed in Table 16 are the results of the detailed analyses of the ESP hopper ash samples. The Hg contents in the eight ESP hopper ash samples ranged from 0.06 to 0.21 ppm. Note that the Hg contents in samples collected from the transfer pipe linking hoppers in the second field are higher than those found in samples collected from the transfer pipe linking hoppers in the first field, and the higher the carbon content in the ash, the higher the mercury measured.

Table 15. Analytical Summary of ESP Hopper Ash Samples.

Sample Description	**ESP Hopper Ash**			
Sample Date	7/20/2004	7/21/2004	7/21/2004	7/22/2004
Test No.	1	2	3	4
Moisture (%, as det'd)	0.15	0.15	0.12	0.16
Ash (%, dry)	96.46	95.11	94.91	92.92
Carbon (%, dry)	3.24	4.45	4.34	5.8
Hg (ppm, as det'd)	0.07	0.08	0.07	0.10
Major Ash Element (%, dry)				
SiO_2	44.44	43.32	42.37	42.77
Al_2O_3	18.75	18.22	18.19	17.82
TiO_2	0.90	0.88	0.87	0.86
Fe_2O_3	22.29	21.76	23.05	21.37
CaO	4.40	4.39	4.53	4.32
MgO	1.11	1.14	1.18	1.15
Na_2O	0.77	0.82	0.94	0.86
K_2O	2.12	1.95	1.95	2.02
P_2O_5	0.33	0.25	0.20	0.19
SO_3	0.91	0.92	1.09	0.95

Table 16. Detailed Results of Analyses of the ESP Hopper Ash Samples.

Sample ID	ESP ASH 1A	ESP ASH 1B	ESP ASH 2A	ESP ASH 2B	ESP ASH 3A	ESP ASH 3B	ESP ASH 4A	ESP ASH 4B
Sample Date	7/20/2004		7/21/2004		7/21/2004		7/22/2004	
Test No.	1		2		3		4	
Electric Field No.	2	1	2	1	2	1	2	1
Analytical No.	20043582	20043583	20043584	20043585	20043586	20043587	20043588	20043589
Moisture (%, as det'd)	0.16	0.15	0.15	0.15	0.12	0.12	0.2	0.15
Ash (%, dry)	94.48	96.68	92.29	95.42	92.36	95.19	91.51	93.08
Carbon (%, dry)	5.05	3.04	6.83	4.19	6.37	4.11	7.43	5.62
Chlorine (%, ppm)	7	< 5	5	5	5	< 5	7	5
Hg (ppm, as det'd)	0.17	0.06	0.21	0.07	0.16	0.06	0.11	0.10
Major Ash Elements (%)								
SiO_2	42.96	44.61	43.01	43.36	40.90	42.53	42.32	42.82
Al_2O_3	18.01	18.83	18.21	18.22	17.41	18.28	17.57	17.85
TiO_2	0.85	0.90	0.86	0.88	0.83	0.87	0.83	0.86
Fe_2O_3	22.63	22.25	21.06	21.83	23.21	23.03	21.61	21.34
CaO	4.36	4.41	4.24	4.41	4.41	4.55	4.17	4.34
MgO	1.07	1.11	1.12	1.14	1.12	1.18	1.10	1.15
Na_2O	0.74	0.77	0.86	0.81	0.88	0.95	0.88	0.86
K_2O	2.05	2.12	2.10	1.93	1.84	1.96	2.08	2.01
P_2O_5	0.30	0.33	0.25	0.25	0.18	0.20	0.18	0.19
SO_3	0.88	0.91	0.97	0.91	0.97	1.10	0.94	0.95

D. FGD Slurry

Two 500-mL FGD slurry samples were collected during each test. One sample was collected in the first hour of the test and another sample was collected in the second hour of the test. Each slurry sample was first filtered to generate a solids sample and a filtrate sample. The dried solids and filtrate samples were then analyzed separately. The average results of analyses of the FGD slurry solids and filtrate samples are summarized in Tables 17 and 18, respectively. The results of detailed analyses of scrubber slurry solids and filtrate samples are listed in Tables 19 and 20, respectively. The mercury contents in the eight FGD slurry solids samples ranged from 0.54 to 0.61 ppm and the mercury concentrations in the corresponding filtrate samples ranged from 4.8 to 10.4 μg/L.

Table 17. Analytical Summary of FGD Slurry Solids Samples.

Sample Description	**FGD Slurry Solids**			
Sample Date	7/20/2004	7/21/2004	7/21/2004	7/22/2004
Test No.	1	2	3	4
% solids in original sample	3.95	4.20	4.00	3.85
Density of original sample (g/mL)	1.05	1.05	1.05	1.05
Residual moisture (%, as det'd)	1.47	1.29	1.25	1.38
Ash (%, dry)	97.59	97.30	97.20	97.31
Carbon (%, dry)	0.51	0.75	0.74	0.70
Chlorine (%, dry)	0.14	0.19	0.16	0.19
Hg (ppm, as det'd)	0.58	0.55	0.55	0.56
Major Ash Elements (%)				
SiO_2	2.22	2.58	2.51	2.87
Al_2O_3	0.90	1.03	1.02	1.18
TiO_2	0.04	0.05	0.05	0.05
Fe_2O_3	0.88	1.30	1.27	1.18
CaO	38.26	37.43	37.50	37.55
MgO	1.59	1.78	1.76	1.56
Na_2O	0.06	0.07	0.08	0.08
K_2O	0.10	0.11	0.11	0.13
P_2O_5	0	0	0	0
SO_3	53.04	51.56	52.12	51.48

Table 18. Analytical Summary of FGD Slurry Filtrate Samples.

Sample Description	FGD Slurry Filtrate			
Test No.	1	2	3	4
Sample Date	7/20/2004	7/21/2004	7/21/2004	7/22/2004
Ca (μg/mL)	27.95	28.85	28.65	27.95
Total Iron (μg/mL)	0.72	0.84	0.93	0.77
Mg (μg/mL)	2,800	2,895	2,895	2,880
K (μg/mL)	71	70	68	69
Na (μg/mL)	70	71	69	71
Ammonia as NH_3 (μg/mL)	<10	<10	<10	<10
Cl (μg/mL)	6,055	5,125	5,230	4,980
NO_3 as N (μg/mL)	INT	<10	INT	<10
SO_4 (μg/mL)	<0.53	<0.53	<0.53	<0.53
Hg (μg/L)	7.60	5.35	5.65	8.65

INT: Interference

Table 19. Detailed Results of Analyses of FGD Slurry Solids Samples.

Sample ID	FGD Slurry-1-1	FGD Slurry-1-2	FGD Slurry-2-1	FGD Slurry-2-2	FGD Slurry-3-1	FGD Slurry-3-2	FGD Slurry-4-1	FGD Slurry-4-2
Sample Date	7/20/2004		7/21/2004		7/21/2004		7/22/2004	
Ananlytical No.	20043594	20043595	20043596	20043597	20043598	20043599	20043600	20043601
% solids of original sample	3.7	4.2	4.1	4.3	3.9	4.1	3.9	3.8
Density of original sample (g/mL)	1.047	1.047	1.047	1.053	1.055	1.053	1.054	1.052
Moisture (%, as det'd)	1.48	1.46	1.23	1.35	1.07	1.42	1.03	1.73
Ash (%, dry)	98.02	97.16	97.46	97.14	97.20	97.20	97.45	97.16
Carbon (%, dry)	0.50	0.52	0.70	0.80	0.75	0.73	0.69	0.71
Total Sulfur (dry, %)	21.54	21.53	20.94	20.84	21.05	21.17	20.85	20.91
Chlorine (%, dry)	0.147	0.127	0.214	0.165	0.156	0.162	0.198	0.180
Hg (ppm, as det'd)	0.54	0.61	0.56	0.54	0.54	0.55	0.55	0.56
Major Ash Elements (%)								
SiO_2	2.23	2.27	2.51	2.72	2.62	2.45	2.81	3.00
Al_2O_3	0.90	0.91	0.99	1.09	1.04	1.01	1.19	1.20
TiO_2	0.04	0.04	0.04	0.05	0.05	0.05	0.05	0.05
Fe_2O_3	0.79	0.98	1.16	1.46	1.26	1.31	1.15	1.23
CaO	39.09	38.56	38.01	37.82	37.73	38.20	37.89	38.26
MgO	1.47	1.75	1.73	1.88	1.65	1.91	1.42	1.74
Na_2O	0.06	0.06	0.07	0.07	0.08	0.10	0.07	0.08
K_2O	0.10	0.10	0.10	0.11	0.11	0.10	0.13	0.13
P_2O_5	0.00	0.00	0.00	0.00	0.00	0.00	0.00	0.00
SO_3	53.84	53.83	52.36	52.10	52.62	52.93	52.12	52.27

Table 20. Detailed Results of Analyses of FGD Slurry Filtrate Samples.

Sample ID	FGD Slurry Filtrate -1		FGD Slurry Filtrate - 2		FGD Slurry Filtrate- 3		FGD Slurry Filtrate - 4	
Sample Date	7/20/2004		7/21/2004		7/21/2004		7/22/2004	
Test No.	1		2		3		4	
Analytical No.	20043614	20043615	20043616	20043617	20043618	20043619	20043620	20043621
Ca (µg/mL)	28.2	27.7	28.4	29.3	28.9	28.4	27.5	28.4
Total Iron (µg/mL)	2,790	2,810	2,880	2,910	2,920	2,870	2,880	2,880
Mg (µg/mL)	69.7	72.2	71.1	69.5	67.3	69.3	67.7	69.8
K (µg/mL)	69.0	71.3	71.9	70.6	68.3	70.2	70.1	71.8
Na (µg/mL)	<10	<10	<10	<10	<10	<10	<10	<10
Ammonia as NH_3 (µg/mL)	6,710	5,400	5,160	5,090	5,120	5,340	4,850	5,110
NO_3 as N (µg/mL)	<10	<10	<10	<10	<10	<10	<10	<10
SO_4 (µg/mL)	<0.53	<0.53	<0.53	<0.53	<0.53	<0.53	<0.53	<0.53
Hg (µg/L)	10.4	4.8	5.5	5.2	5.4	5.9	8.5	8.8

E. FGD Makeup Water Samples

One 500-mL FGD makeup water sample was collected during each test. Table 21 summarizes the analytical results for the FGD makeup water samples. The Hg concentrations range from less than detection limit of 1.0 µg/L to 5.4 µg/L.

Table 21. Analytical Summary of FGD Makeup Water Samples.

Sample ID	FGD Makeup Water - 1	FGD Makeup Water - 2	FGD Makeup Water - 3	FGD Makeup Water - 4
Sample Date	7/20/2004	7/21/2004	7/21/2004	7/22/2004
Test No.	1	2	3	4
Analytical No.	20043610	20043611	20043612	20043613
Ca (µg/mL)	41.8	39.7	40.3	38.6
Total Iron (µg/mL)	2,970	3,000	2,930	2,700
Mg (µg/mL)	63.1	61.2	60.7	68.1
K (µg/mL)	64.9	63.4	63.0	70.6
Na (µg/mL)	<10	<10	<10	<10
Ammonia as NH_3 (µg/mL)	4,430	5,390	4,470	4,230
NO_3 as N (µg/mL)	<10	<10	<10	<10
SO_4 (µg/mL)	<0.53	<0.53	<0.53	<0.53
Hg (µg/L)	<1.0	2.3	3.8	5.4

F. Centrate Return Samples

One 500-mL *centrate return* sample was collected during each test. Each sample was first filtered to generate a solid sample and a filtrate sample, which were analyzed separately. Tables 22 and 23 summarize the analytical results for the centrate return solids, and centrate return filtrate samples, respectively. The mercury contents in the centrate return solids samples ranged from 4.41 to 4.63 ppm. The mercury concentrations in the corresponding filtrates are all below the detection limit of 1.0 µg/L.

Table 22. Analytical Summary of Centrate Return Solids Samples.

Sample ID	Centrate Solids-1	Centrate Solids-2	Centrate Solids-3	Centrate Solids-4
Sample Date	7/20/2004	7/21/2004	7/21/2004	7/22/2004
Analytical No.	20043602	20043603	20043604	20043605
% solids	2.7	2.6	2.7	2.6
Specific gravity	1.04	1.04	1.04	1.04
Moisture (%, as det'd)	4.36	4.31	2.30	4.70
Ash (%, dry)	95.94	92.11	93.41	91.62
Carbon (%, dry)	0.47	0.44	0.42	0.43
Chlorine (%, dry)	0.31	0.66	0.66	0.62
Hg (ppm, as det'd)	4.42	4.63	4.43	4.41
Major Ash Elements (%)				
SiO_2	5.91	5.62	5.63	5.71
Al_2O_3	2.06	1.97	1.99	2.02
TiO_2	0.07	0.07	0.07	0.07
Fe_2O_3	0.79	0.74	0.77	0.77
CaO	33.32	31.83	32.06	31.78
MgO	4.29	5.35	5.70	5.37
Na_2O	0.06	0.12	0.11	0.10
K_2O	0.11	0.14	0.13	0.13
P_2O_5	0.00	0.00	0.00	0.00
SO_3	44.14	44.59	45.30	44.59

Table 23. Analytical Summary of Centrate Return Filtrate Samples.

Sample ID	Centrate Filtrate-1	Centrate Filtrate-2	Centrate Filtrate-3	Centrate Filtrate-4
Sample Date	7/20/2004	7/21/2004	7/21/2004	7/22/2004
Test No.	1	2	3	4
Analytical No.	043622	043623	043624	043625
Ca (µg/mL)	118	121	112	93.1
Total Iron (µg/mL)	2,360	2,540	2,560	2,610
Mg (µg/mL)	67.9	70.2	70.9	71.0
K (µg/mL)	77.6	84.6	82.7	80.9
Na (µg/mL)	<10	<10	<10	<10
Ammonia as NH_3 (µg/mL)	3,140	4,400	4,350	4,390
NO_3 as N (µg/mL)	<10	<10	<10	<10
SO_4 (µg/mL)	3,130	3,990	4,380	4,410
Hg (µg/L)	<1.0	<1.0	<1.0	<1.0

QUALITY ASSURANCE/QUALITY CONTROL

The sampling and analysis QA/QC procedures are described below.

- Personnel specifically trained and experienced in power plant sampling methods, including the Ontario-Hydro mercury sampling method, conducted all sampling,
- The sampling equipment was maintained and calibrated as required,
- Consistent sample preparation and recovery procedures were used,
- Samples were logged and tracked under the direction of sample team Group Leader,
- Individual calibration curves were developed for each sample matrix,
- NIST Standard Reference Material (SRM) and lab QC samples were analyzed to verify calibration curves,
- Duplicates of selected samples were analyzed to assure repeatability,
- Analyses of selected "spiked" samples were analyzed to assure sample recovery, and
- Interim data were reviewed to assure sample completeness.

All samples were obtained using the procedures described in EPA Method 5 and the Ontario-Hydro mercury Speciation draft method. Data were recorded on standard forms, which are included in Appendix A. The field data were reduced using standard "in-house" spreadsheets. Copies of the summary sheets are included in Appendix A. To assure consistency, all of the Ontario-Hydro train components were prepared and recovered under the supervision of a senior technician experienced in the Ontario-Hydro mercury speciation lab techniques. Copies of the recovery sheets are included in Appendix C.

The Ontario-Hydro sampling train analysis consisted of eight sub-samples. Each sub-sample analysis consisted of developing a calibration curve (absorbance versus mercury concentration in solution), checks of field and lab blanks, SRM and lab standard calibration-checks, selected duplicates and selected sample spikes. The laboratory summaries for each of these runs are contained in Appendix C.

A total of 143 individual Ontario-Hydro mercury determinations were completed. This included 13 blank samples, 27 NIST SRM or lab QC checks, 13 sample spikes, and 14 duplicate analyses.

I. Blank Samples

A total of 13 blank liquid samples were analyzed. The average blank value was <0.3 ng/ml (ppb in solution). The average blank value is much less than any individual Hg^{part},

Hg^{++}, or Hg^{0} determination in ng/ml and, more importantly, is much less than the mercury concentration detection limit (discussed later in this report). Consequently, in this report, blank concentrations were not subtracted out from any mercury determination.

II. NIST SRM Checks

Twenty-seven NIST standard reference material (SRM) checks were conducted throughout the mercury determinations. Two standards were used in the determinations as detailed in Table 24.

Table 24. NIST SRM Analyses

NIST SRM	Standard Value (ng/ml)	Sample Fraction	Samples Analyzed	Average Result (ng/ml)	Percent of Standard	Standard Deviation (%)	Percent Relative Standard Deviation
1641D	8.0	Ontario Hydro Liquids	22	8.0	100	0.1	1.7
		Ontario Hydro Filters	2	8.15	101.9	NA	NA
1633b	141	Ontario Hydro Filters	3	140	99	8.9	6.3

III. Spike Sample Recoveries

A total of 13 samples were spiked with a 2 ppb mercury standard and then re-analyzed to determine the percent spike recovery. The result of this QA/QC procedure was an average spike recovery of 91.3% recovery with a 5.3% standard deviation.

IV. Duplicate Analyses

A total of 13 duplicate analyses were conducted periodically throughout the mercury determinations. Three of the results were not within twenty percent of the original value; however, the original values were near the detection limits. The samples were reanalyzed and two were still outside the twenty percent criterion. Even with this error, the duplicate results averaged within 10.1% of the original mercury determination, with a ±9.7% standard deviation.

V. Flue Gas Mercury Concentration Detection Limits

For liquid samples, the flue gas mercury concentration was calculated using the following equation:

$$Hg\left[\mu g / m^{3}\right] = \frac{\left(C_{imp}\ x V_{imp}\right)}{\left(V_{gas}\ x 1000\right)}$$

where: C_{imp} = Mercury concentration of impinger solution (ng/mL (ppb))
V_{imp} = Liquid volume of impinger solution (mL)
V_{gas} = Flue gas sample volume (dry standard m^3)
1000= Conversion factor (1000 ng per µg)

The flue gas mercury detection limit is reduced when the flue gas sample volume is increased or liquid volume of impinger solution is decreased. The CVAA is calibrated between 0 and 20 ng/ml. Over this range, the calibration curve between absorbance and concentration is linear. The lowest concentration standard used to develop the calibration curve is 0.500 ng/ml. In addition, the detection limit of the liquid CVAA analysis was <1.0 ng/ml. The prescribed sampling and recovery procedures result in final liquid volumes varying between 64 and 763 ml. The volume of flue gas collected varied between 0.886 and 2.212 dscm. The sampling variables result in sample-specific flue gas detection limit. The flue gas mercury detection limit for each sample matrix is listed in Table 25.

Table 25. Flue Gas Mercury Detection Limits

Matrix	Maximum Liquid Volume (ml)	Minimum Gas Volume (dscm)	Flue Gas Detection Limit (µg/m^3)
Probe Rinse	157	0.886	0.18
KCl Impinger	763	0.886	0.86
HNO_3/H_2O_2 Impingers	178	0.886	0.20
$KMnO_4$ Impingers	249	0.886	0.28
HCl Rinse	100	0.886	0.11

Depending on the matrix, the flue gas mercury detection limit ranged from 0.11-0.86 µg/m^3.

VI. Mercury Material Balance Closure

One important criterion to gauge the overall quality of the tests is to conduct a mass balance to account for the mercury entering and leaving the plant during the time of the tests. Mercury enters the plant through coal, FGD reagent, and FGD make-up water. Mercury leaves the plant via bottom ash, ESP hopper ash, FGD sludge, and stack flue gas. The calculation of each process stream's contribution to the mercury balance is described in the following sections.

A. Mercury Input from Coal

The coal feed rates were recorded and provided by the plant. A coal sample was collected for each test and the results of the analyses were used for material balance calculations. The average values of the analyses for the coal samples are summarized in Table 10. The mercury input from coal can be calculated based on the analytical results and the coal feed rate. The results are summarized in Table 26. The Hg input from coal for the four tests conducted at this unit ranged from 5.76 to 7.98 mg/sec.

Table 26. Mercury Input from Coal

Test No.	1	2	3	4
Coal feed rate (kpph)	486.5	486.5	481.8	456.8
Coal moisture content (%)	1.32	1.22	1.31	1.21
Coal Hg content (ppm)	0.13	0.11	0.10	0.10
Hg input from the coal (mg/sec)	**7.98**	**6.75**	**6.08**	**5.76**

B. Mercury Input from Lime Slurry

Samples of the lime slurry were collected during each test. The results of the analyses were provided previously in Tables 13 and 14, respectively. The lime slurry feed rate can be determined from the measured feed coal sulfur and stack flue gas sulfur dioxide concentrations. The Ca/S ratio is assumed to be 1.01 in all four tests. By applying the lime slurry Hg concentrations to the calculated slurry feed rate, the total Hg input from lime slurry can be determined. Table 27 summarizes the results. The Hg input from lime slurry stream in the four tests conducted at this unit ranged from 0.02 to 0.67 mg/sec.

Table 27. Mercury Input from Lime Slurry

Test No.	1	2	3	4
Coal feed rate (kpph)	486.5	486.5	481.8	456.8
Coal moisture content (as det'd, %)	1.32	1.22	1.31	1.21
Coal sulfur content (dry, wt%)	3.86	3.78	3.78	3.57
FGD sulfur input from coal (kpph)	18.33	17.97	17.78	15.94
Ca/S ratio	1.01			
Lime slurry flowrate (kpph)	173.3	174.4	168.1	150.7
Lime slurry mercury content (ppb)	30.5	13.6	1.32	0.97
Hg input from slurry (mg/sec)	**0.67**	**0.29**	**0.03**	**0.02**

C. Mercury Input from Centrate Return

The volumetric flow rate of the *Centrate Return* stream back to the FGD ranged from 900 to 1,200 gpm as reported by a plant operator. To calculate the mercury input from this stream, a flat rate of 1,100 gpm was assumed for all four tests. The results of analyses of the Centrate Return Solids and Centrate Return Filtrate were previously summarized in Tables 22 and 23, respectively. The mercury input from the *Centrate Return* from each test can then be calculated, and the results are summarized in Table 28. The Hg input from Centrate Return stream in the four tests conducted at this unit ranged from 0.94 to 0.99 mg/sec.

Table 28. Mercury Input via Centrate Return.

Test No.	1	2	3	4
Centrate return volumetric flow rate (gpm)	1,100	1,100	1,100	1,100
Density of Centrate Return (g/mL)	1.04	1.04	1.04	1.04
Centrate return mass flow rate (kpph)	598	598	598	598
Hg flow rate via Centrate Return (lb/hr)	0.0078	0.0078	0.0078	0.0075
Hg input from Centrate Return (mg/sec)	**0.98**	**0.99**	**0.98**	**0.94**

D. Mercury Input from FGD Makeup Water

The Hg input from the FGD Makeup Water stream is the product of the Hg concentration in the makeup water and the flow rate of that stream. The Hg concentration in the makeup water was summarized in Table 21. The flow rate of the makeup water was provided by the plant. The Hg concentration in the makeup water collected in the first test was below the detection limit of 1.0 μg/L. For the purpose of calculating the mass flow, a Hg concentration of half the detection limit of 0.5 μg/L was

adopted. The Hg inputs from the FGD makeup water in the four tests conducted at this unit are summarized in Table 29. The Hg input ranges from 0.01 to 0.10 mg/sec.

Table 29. Mercury Input from FGD Makeup Water.

Test No.	1	2	3	4
FGD Makeup Water volumetric flow rate (gpm)	249.3	246.3	246.2	266.9
FGD Makeup Water mass flow rate (kpph)	130.9	129.3	129.3	140.1
Hg in FGD Makeup Water (μg/L)	0.5	2.3	3.8	5.4
Hg Input from FGD Makeup Water (lb/hr)	6.54×10^{-5}	2.97×10^{-4}	4.91×10^{-4}	7.54×10^{-4}
Hg Input from FGD Makeup Water (mg/sec)	**0.01**	**0.04**	**0.06**	**0.10**

E. Mercury Output via Bottom Ash

The rates of bottom ash leaving the plant were calculated based on the assumption that 20 percent of the coal ash ended up as bottom ash. The results of analyses of the bottom ash solids and filtrate samples were previously summarized in Tables 11 and 12, respectively. The mercury output via the bottom ash from each test can then be calculated, and the results are summarized in Table 30. The Hg output via bottom ash for the four tests conducted at this unit ranged from 0.0055 to 0.0067 mg/sec.

Table 30. Mercury Output via Bottom Ash.

Test No.	1	2	3	4
Coal feed rate (kpph)	486.5	486.5	481.8	456.8
Coal moisture content (%)	1.32	1.22	1.31	1.21
Coal ash content (%, dry)	13.65	13.06	11.45	12.38
Bottom Ash/Coal Ash (wt/wt)	0.2			
Bottom ash mass flow rate (kpph)	13.2	12.6	10.9	11.2
Bottom ash Hg content (ppm)	0.004	0.004	0.004	0.004
Hg output via bottom ash (mg/sec)	**0.0067**	**0.0064**	**0.0055**	**0.0057**

F. Mercury Output via ESP Hopper Ash

The rates of ESP ash leaving the plant were calculated based on the assumption that 80 percent of the coal ash ended up as ESP ash. For material balance calculations, only average ESP hopper ash mercury value was used. The hoppers were arranged in a 2 x 16 pattern (2 fields x 16 hoppers in each field). The plant reported that about 90 percent of the ash was collected in the hoppers in the first field (1B1 to 1B16) and the

balance ten percent of the ash was collected by the remaining hoppers in the second field (1A1 to 1A16). The average value was calculated as follows. Summarized in Table 31 is the Hg output via the ESP hopper ash.

0.90 x (average value of Hg in hoppers in the first field) + 0.10 x (average value of Hg in hoppers in the second field)

Table 31. Mercury Output via ESP Ash.

Test No.	1	2	3	4
Coal feed rate (kpph)	486.5	486.5	481.8	456.8
Coal moisture content (as det'd, %)	1.32	1.22	1.31	1.21
Coal ash content (dry, wt %)	13.65	13.06	11.45	12.38
Coal ash fraction going to ESP	0.80			
Coal ash going to ESP (kpph)	54.3	52.6	45.6	47.5
Total mass captured in ESP (kpph)	52.4	50.2	43.6	44.7
ESP ash Hg content (ppm as det'd)	0.07	0.08	0.07	0.10
Hg output via ESP ash (mg/sec)	**0.48**	**0.53**	**0.40**	**0.60**

G. Mercury Output via FGD Slurry

The Hg output via the FGD slurry stream is the product of the Hg content in the slurry and the slurry flow rate or blowdown rate. The Hg contents in the FGD slurry solids and Hg concentrations in the FGD slurry filtrates are summarized in Tables 17 and 18, respectively. The FGD slurry flow rate was calculated based on the steady state assumption that the level (or volume) of the scrubbing liquor inside the scrubber and the solids fraction in the scrubbing liquor are constant. To maintain a constant liquor level inside the scrubber, a separate material balance of water around the scrubber had to be calculated first.

Water entered the scrubber from the following streams: moisture in the incoming flue gas, water in the lime slurry, water in the centrate return, ME (mist eliminator) Wash Water, and FGD Makeup water. The amount of moisture in the incoming flue gas came from the moisture and the hydrogen contents in the coal. The amount of water in the lime slurry was calculated based on the water content in the lime slurry and the lime consumption rate, which was calculated from the rate of removal of sulfur dioxide inside the scrubber. The flow rate of the ME Wash Water was provided by the plant. The flow rate of the centrate return stream was assumed to be 1,100 gpm for all four tests.

Water left the scrubber in the following streams: the moisture present in the flue gas (or stack water loss) and the FGD blowdown rate. The flue gas moisture flow rate was the product of the flue gas flow rate and the flue gas moisture concentration (measured by the Ontario Hydro method during mercury sampling.

The volumetric FGD blowdown rate was the difference between the volumetric flow rates of all the water entered the scrubber and the volumetric rate of stack water loss.

The Summarized in Table 32 is the Hg output via the FGD slurry stream in the four tests conducted at this unit. The Hg output via the FGD slurry stream ranged from 5.42 to 7.17 mg/sec.

Table 32. Mercury Output via FGD Slurry.

Test No.	1	2	3	4
Water input from coal moisture (kpph)	6.4	5.9	6.3	5.5
Water input from coal hydrogen (kpph)	213.0	208.0	207.6	197.0
Water input from coal (kpph)	219.5	214.0	213.9	202.5
Water input from coal (gpm)	418	407.5	407.4	385.7
Water input from lime slurry (kpph)	131.9	133.8	127.6	114.6
Water input from lime slurry (gpm)	251.2	254.8	243.1	218.2
Water input from ME wash water (gpm)	627.6	665.3	650.5	662.3
Water input from Centrate Return (gpm)	1,100	1,100	1,100	1,100
Water input from FGD Makeup (gpm)	249.3	246.3	246.2	266.9
Total water input to FGD (gpm)	2,646	2,674	2,647	2,633
Stack water loss (kpph, from O-H data)	812.9	829.1	865.3	939.6
Stack water loss (gpm)	1,548	1,579	1,648	1,790
FGD blowdown rate (gpm)	1,098	1,095	999	843
FGD solids mass rate (kpph)	92.12	91.7	83.64	70.71
Hg in FGD solids (ppm)	0.58	0.55	0.55	0.56
Hg output via FGD solids (Ib/hr)	5.30×10^{-2}	5.04×10^{-2}	4.60×10^{-2}	3.96×10^{-2}
FGD liquid mass rate (kpph)	514.3	512.9	468.1	395.2
Hg in FGD liquid (ng/mL)	7.60	5.35	5.65	8.65
Hg output via FGD liquid (Ib/hr)	3.91×10^{-3}	2.74×10^{-3}	2.64×10^{-3}	3.42×10^{-3}
Hg output via FGD Slurry (Ib/hr)	5.69×10^{-2}	5.32×10^{-2}	4.86×10^{-2}	4.30×10^{-2}
Hg output via FGD Slurry (mg/sec)	**7.17**	**6.70**	**6.13**	**5.42**

H. Mercury Output via Stack Flue Gas

The amount of mercury in the stack flue gas was calculated based on the Ontario-Hydro data. The results of the mercury output via the stack flue gas are summarized in Table 33. The mercury output via the stack flue gas is the product of Hg concentration in the flue gas and the flue gas flow rate. The mercury output in the four tests conducted at this unit ranged from 0.62 to 1.09 mg/sec.

Table 33. Mercury Output via Stack Flue Gas

Test No.	1	2	3	4
Hg concentration in stack gas (µg/m^3)	1.07	1.33	1.11	0.78
Stack flue gas flow rate (Nm^3/min)	49,200	49,200	49,900	47,600
Hg flow rate via stack flue gas (Ib/hr)	0.007	0.009	0.007	0.005
Hg output via stack flue gas (mg/sec)	0.88	1.09	0.92	0.62

I. Mercury Material Balance Closure

The mercury material balance closure is the total mercury output from the plant divided by the total mercury input, expressed in percent. The total mercury input is the sum of the amounts of mercury in the coal, makeup water, and limestone slurry entering the plant. The total mercury output is the sum of the amounts of mercury leaving the plant through bottom ash, ESP hopper ash, FGD sludge, and stack flue gas. Table 34 shows the results of the mercury material balance closure calculations. For the four tests conducted at the plant, the calculated mercury material balance closures ranged from 89% to 105%. The material balance closures for mercury for all four tests are within the QA/QC criterion of 70-130% for a single test and the average value is 99%, which is within the QA/QC criterion of 80-120% for multiple tests.

Table 34. Summary of Mercury Material Balance Closure.

Test No.	1	2	3	4
Hg input from Coal (mg/sec)	7.98	6.75	6.08	5.76
Hg input from lime slurry (mg/sec)	0.67	0.30	0.03	0.02
Hg input from centrate return stream (mg/sec)	0.98	0.99	0.98	0.94
Hg input from FGD make-up water (mg/sec)	0.01	0.04	0.06	0.10
Hg input to the system (mg/sec)	**9.64**	**8.07**	**7.15**	**6.82**
Hg output from bottom ash (mg/sec)	0.01	0.01	0.01	0.01
Hg output from ESP hopper ash (mg/sec)	0.48	0.53	0.40	0.60
Hg output from FGD slurry (mg/sec)	7.17	6.70	6.13	5.42
Hg output from stack gas (mg/sec)	0.88	1.09	0.92	0.62
Hg output from the system (mg/sec)	**8.55**	**8.35**	**7.48**	**6.66**
Hg material balance closure (%)	**89**	**103**	**105**	**98**
Average Hg Material Balance	**99 ± 7%**			

J. Material Balance Closure for SiO2, Al2O3 and CaO

By following the above procedures, the material balance closure for three major ash oxides, SiO_2, Al_2O_3, and CaO can also be calculated. The results of the material balance closure calculations for these three oxides are summarized in Tables 35, 36, and 37, respectively. The material balance closures for SiO_2, Al_2O_3 and CaO range from 98% to 103%, 95% to 103%, and 97% to 114%, respectively. The average material balance closures for SiO_2, Al_2O_3 and CaO are 101%, 99%, and 107%, respectively. The material balance closures for SiO_2, Al_2O_3 and CaO are within the QA/QC criteria.

The fact that the material balance closures for mercury, SiO_2, Al_2O_3 and CaO fall in the acceptable range of 80-120% indicates that the overall data quality is excellent.

Table 35. Summary of Material Balance Closure for SiO_2.

Test No.	1	2	3	4
SiO_2 input from coal (kpph)	29.29	28.43	24.05	25.69
SiO_2 input from limestone slurry solids (kpph)	0.75	0.64	0.75	0.48
SiO_2 input from centrate return (kpph)	0.09	0.08	0.09	0.08
Total SiO_2 input (kpph)	30.1	29.2	24.9	26.3
SiO_2 output via bottom ash (kpph)	5.81	5.65	4.89	5.03
SiO_2 output via ESP hopper ash (kpph)	23.2	21.7	18.3	18.9
SiO_2 output via FGD sludge (kpph)	1.96	2.28	2.01	1.95
Total SiO_2 output (kpph)	31.0	29.6	25.2	25.8
SiO_2 material balance closure (%)	103	102	101	98
Average SiO_2 material balance closure (%)	**101 ± 2 %**			

Table 36. Summary of Material Balance Closure for Al_2O_3.

Test No.	1	2	3	4
Al_2O_3 input from coal (kpph)	12.5	12.26	10.74	11.23
Al_2O_3 input from limestone slurry solids (kpph)	0.13	0.13	0.12	0.11
Al_2O_3 input from centrate return (kpph)	0.03	0.03	0.03	0.03
Total Al_2O_3 input (kpph)	12.7	12.4	10.9	11.4
Al_2O_3 output via bottom ash (kpph)	2.41	2.33	2.07	2.08
Al_2O_3 output via ESP hopper ash (kpph)	9.8	9.11	7.86	7.86
Al_2O_3 output via FGD sludge (kpph)	0.79	0.9	0.82	0.8
Total Al_2O_3 output (kpph)	13.0	12.3	10.8	10.7
Al_2O_3 material balance closure (%)	103	99	99	95
Average Al_2O_3 material balance closure (%)	**99 ± 3%**			

Table 37. Summary of Material Balance Closure for CaO.

Test No.	1	2	3	4
CaO input from coal (kpph)	2.87	2.79	2.62	2.57
CaO input from limestone slurry solids (kpph)	28.56	28.04	28.44	25.42
CaO input from limestone slurry filtrate (kpph)	0.24	0.17	0.16	0.14
CaO input from centrate return solids (kpph)	0.52	0.46	0.48	0.45
CaO input from centrate return filtrate (kpph)	0.10	0.10	0.09	0.08
CaO in FGD makeup (kpph)	0.01	0.01	0.01	0.01
Total CaO input (kpph)	32.3	31.6	31.8	28.7
CaO output via bottom ash (kpph)	0.59	0.56	0.49	0.50
CaO output via ESP hopper ash (kpph)	2.3	2.19	1.96	1.90
CaO output via FGD sludge solids (kpph)	33.89	32.97	30.1	25.48
CaO output via FGD sludge filtrate (kpph)	0.02	0.02	0.02	0.02
Total CaO output (kpph)	36.8	35.74	32.57	27.9
CaO material balance closure (%)	114	113	102	97
Average CaO material balance closure (%)	**107 ± 8%**			

K. SO2 removal by FGD

The SO_2 removal efficiencies were calculated by the SO_2 concentration in the flue gas leaving the stack (provided by the plant), the mass flow rate of the SO_2 entered the FGD, and volumetric flow rate of the flue gas leaving the stack (determined by the Ontario-Hydro measurements). The results are summarized in Table 38. The SO_2 removal efficiencies ranged from 98.1 to 98.4% and the average removal efficiency was 98.3%, which is slightly higher than the designed removal efficiency of 98%.

Table 38. SO_2 Removal by FGD

Test No.	1	2	3	4
Sulfur entered FGD (kpph)	18.33	17.97	17.78	15.94
SO_2 entered FGD (kpph)	36.66	35.94	35.56	31.87
Stack SO_2 concentration, reported by plant (ppm)	46	42	38	42
Stack flue gas flow, based on O-H data (kacfm)	2,323	2,331	2,375	2,338
SO_2 emissions rate (kpph)	0.67	0.61	0.56	0.59
SO_2 removal efficiency (%)	98.2	98.3	98.4	98.1
Average SO_2 removal efficiency (%)	**98.3 ± 0.1**			

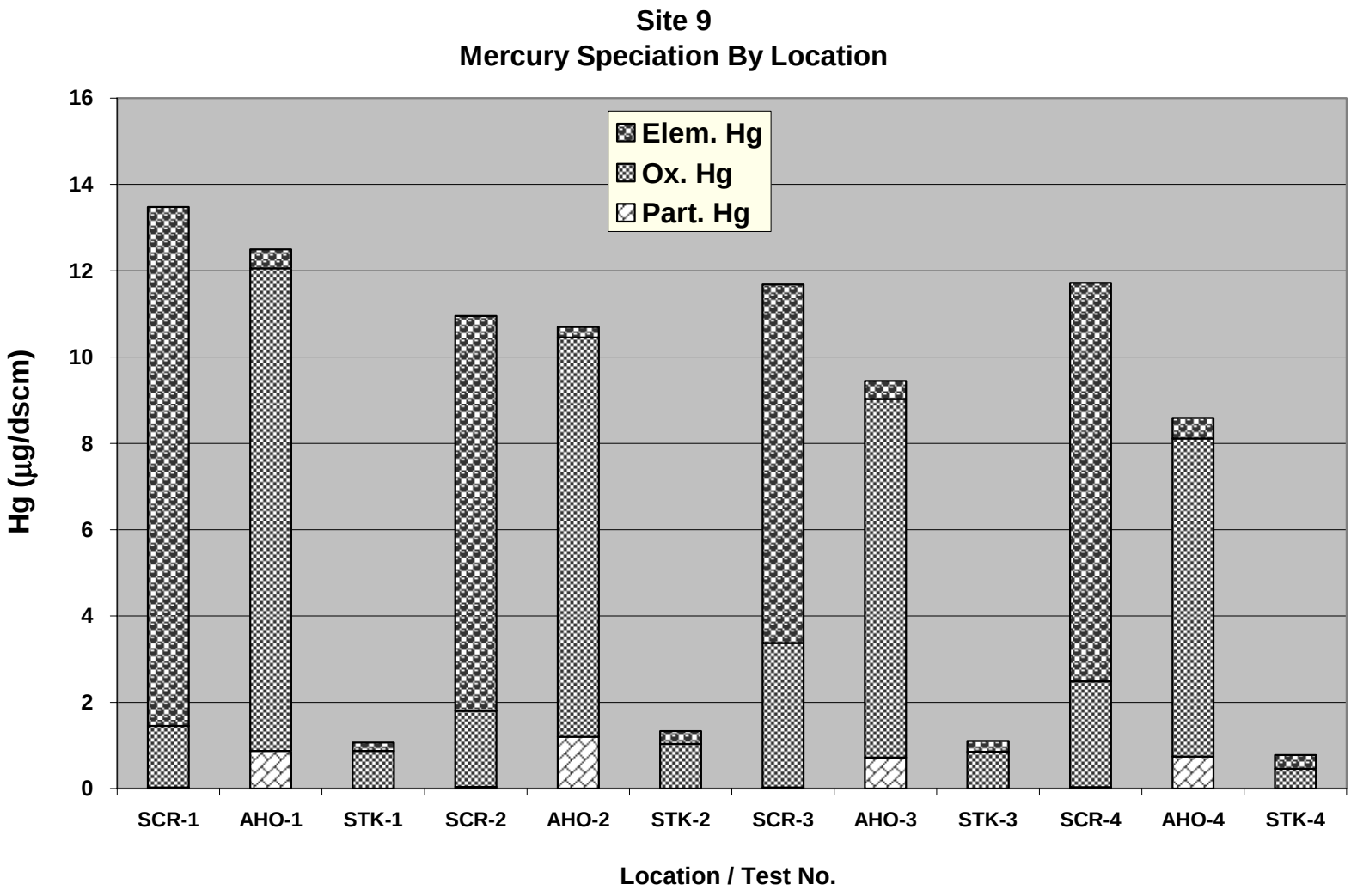

Figure 1. Results of Mercury speciation by location and test number.

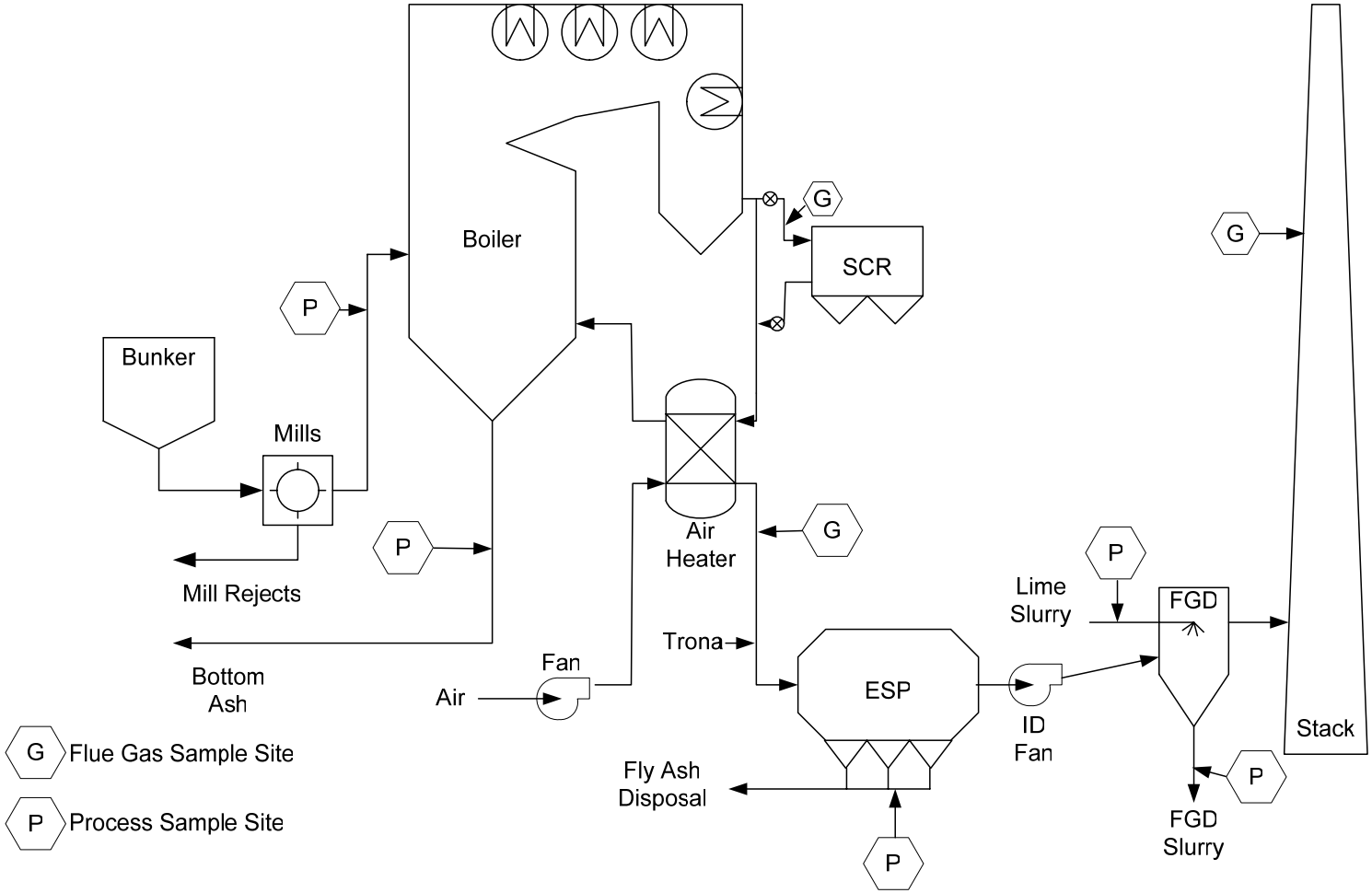

Figure 2. Process flow schematic and sampling locations

Figure 3. SCR inlet mercury sampling train.

Figure 4. Air heater outlet mercury sampling location.

Figure 5. Stack mercury sampling location.

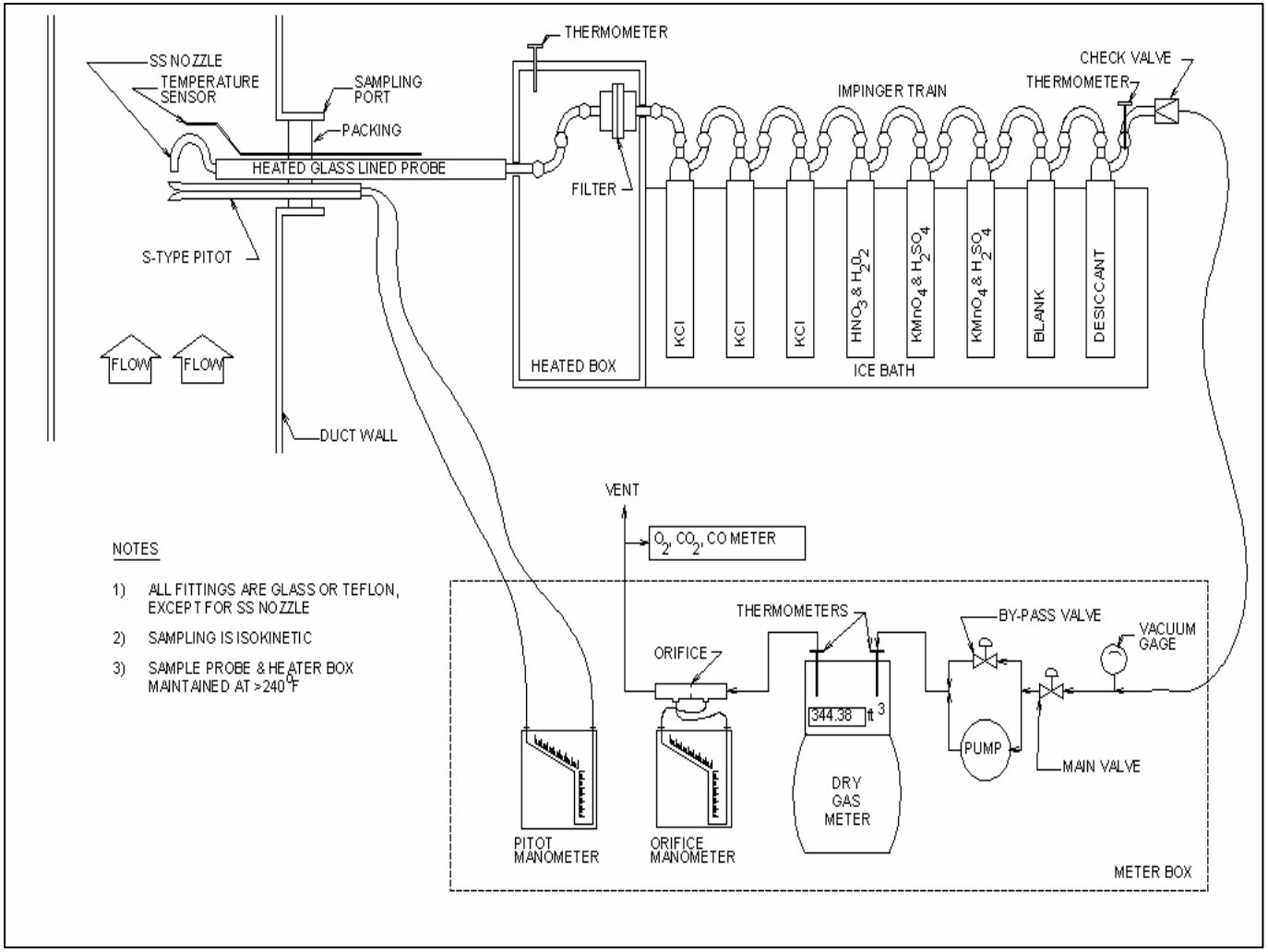

Figure 6. Ontario Hydro sampling train schematic.

Figure 7. Coal sampling at coal pipe No. 1F1.

Figure 8. Bottom ash sampling location.

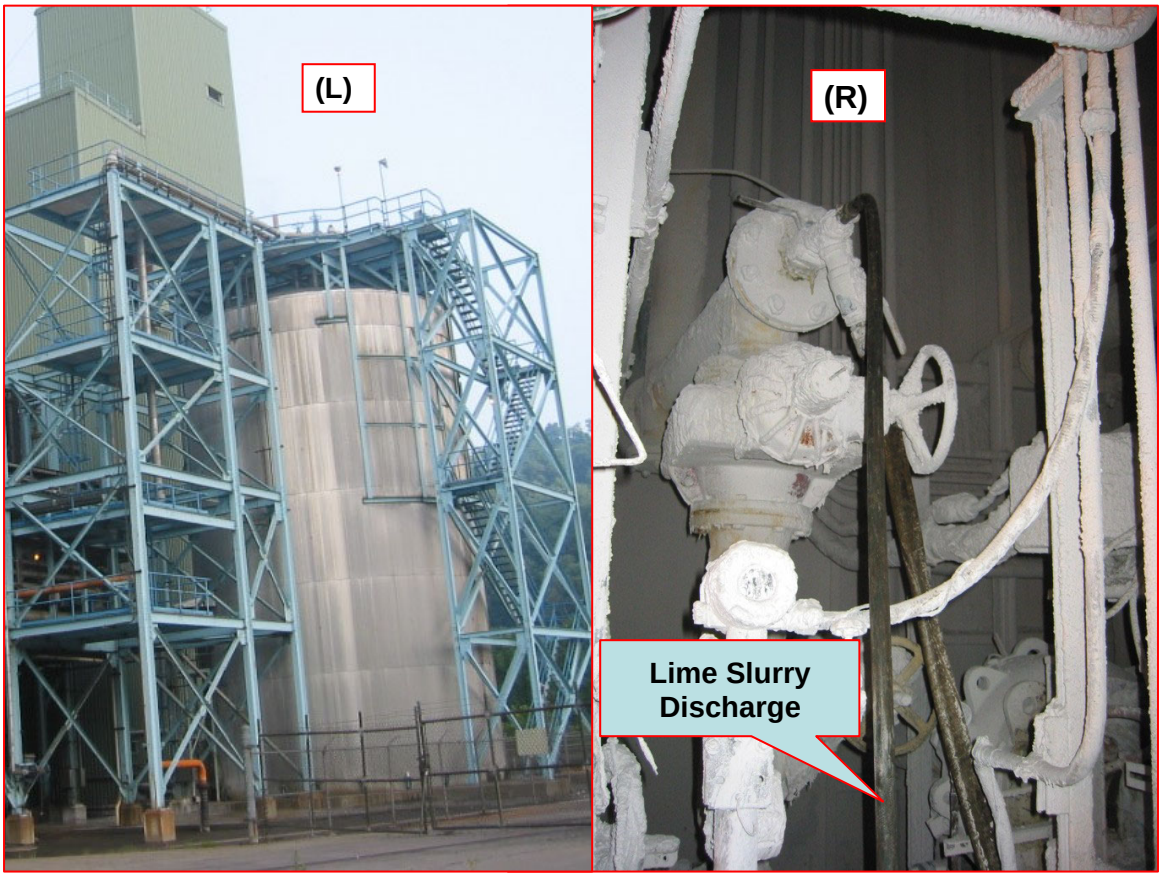

Figure 9. Lime slurry sampling location.

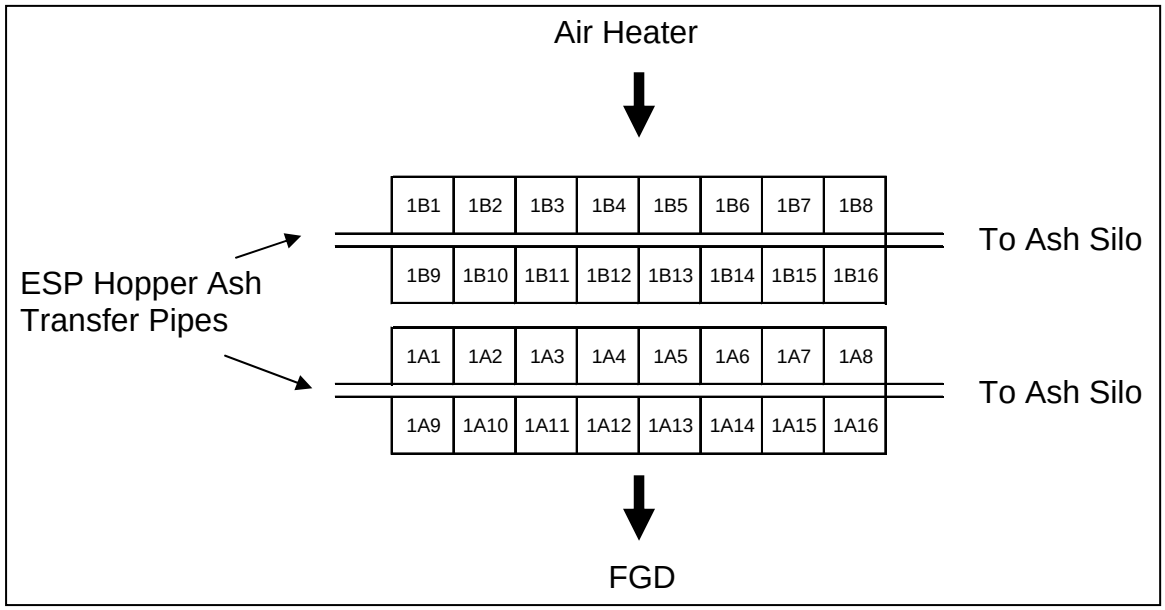

Figure 10. Layout of ESP ash hoppers.

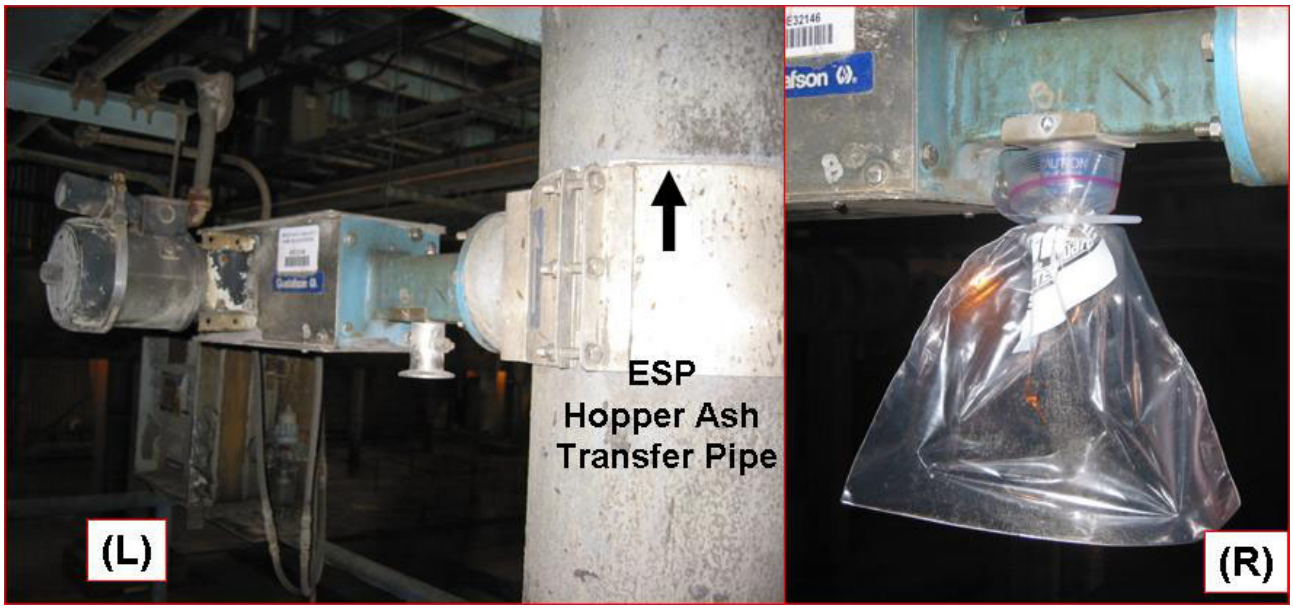

Figure 11. ESP hopper ash sampling location.

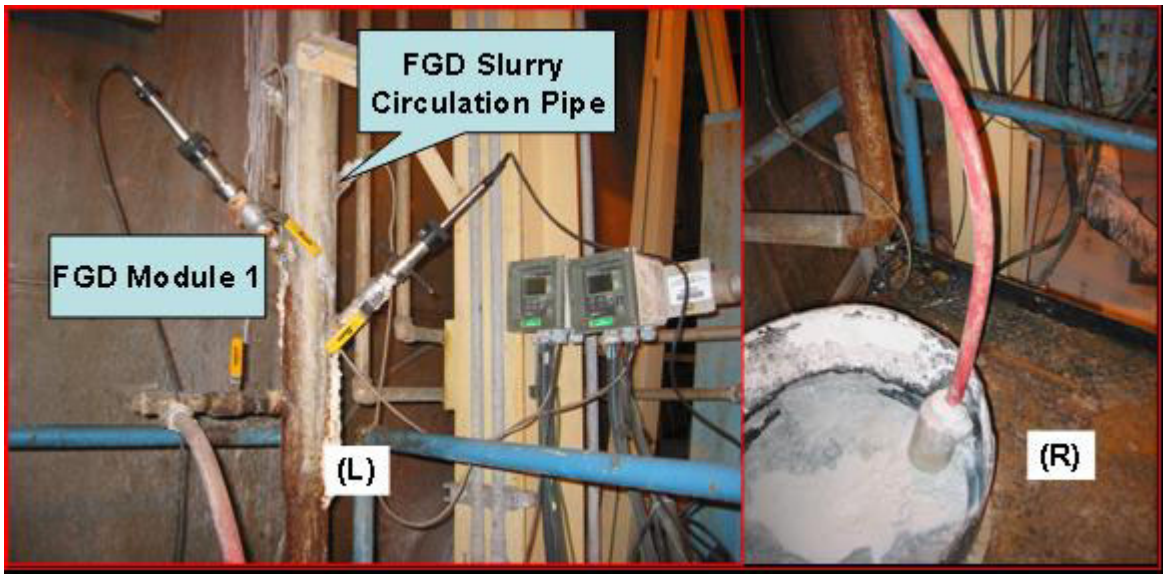

Figure 12. FGD slurry sampling location

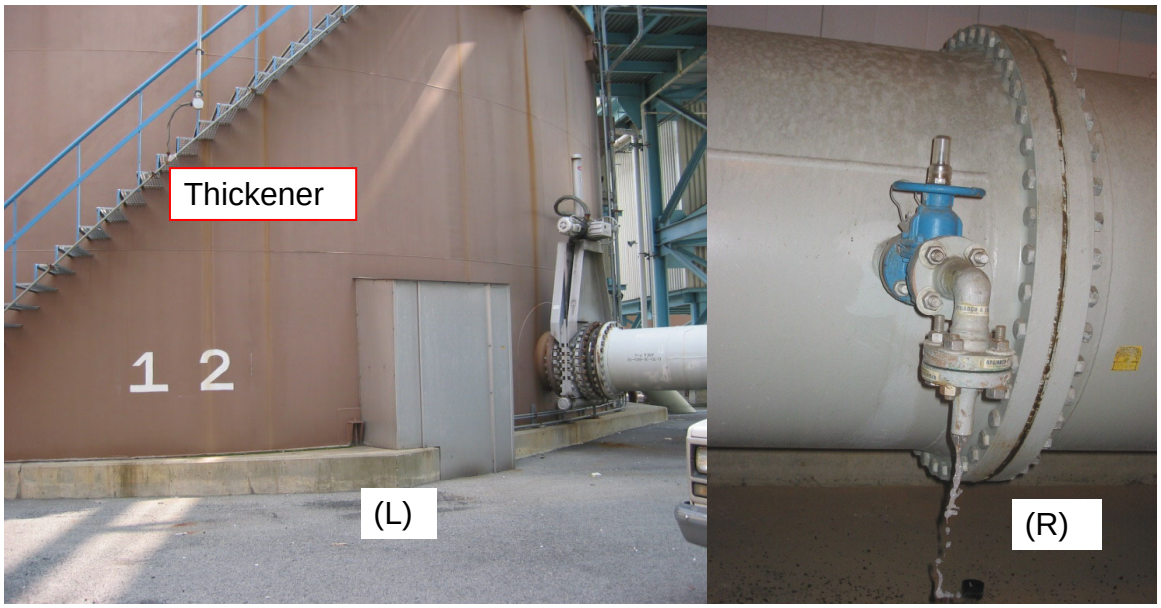

Figure 13. FGD makeup water sampling location.

Figure 14. Centrate return sampling location

APPENDIX A

Mercury Sampling Data

- Field Data Sheets
- Mercury Measurement Data Sheets

ONTARIO HYDRO Hg SAMPLING AND SPECIATION FIELD DATA SHEET

Page _____ of _____

TEST ID	SCR -
PLANT	SCR/FGD Plant 8
LOCATION	SCR Inlet
DATE	
OPERATOR(S)	
AMBIENT TEMP [°F]	
BAR. PRESS. [" Hg]	

METER BOX	
PITOT TUBE DESC	
PROBE LENGTH [ft]	
NOZZLE ID [inch]	
%H_2O (Assumed)	
FILTER ID	
K FACTOR	

CAL. DATA: delta H	
Y	
C(p)	
FILTER BOX SETTING	325
PROBE HTR SETTING	325
DUCT X-SECTION	circ ? rect ? other:
DUCT DIMENSIONS	159x362 (x2) DUCT AREA 799.42 ft^2

Comments:

TRAVERSE POINT [port-inch]	CLOCK TIME (24-hr)	SAMPLE TIME [minute]	STATIC PRES [" H_2O]	PITOT HEAD [" H_2O]	METER DIFF PRESSURE [" H_2O]	METER VACUUM [" Hg]	METER READING [ft^3]	METER TEMP [oF] inlet	METER TEMP [oF] outlet	STACK TEMP [°F]	PROBE TEMP [°F]	FILTER BOX [°F]	LAST IMP TEMP [°F]	METER EXHAUST O_2 [% vol]	METER EXHAUST CO_2 [% vol]
		0													
-26.5		10													
-79.5		20													
-132.5		30													
-26.5		40													
-79.5		50													
-132.5		60													
-26.5		70													
-79.5		80													
-132.5		90													
-26.5		100													
-79.5		110													
-132.5		120													
AVERAGE															

Sample Train Leak Checks: Pre Test _____ ft^3 @ _____ in. Hg; Post Test _____ ft^3 @ _____ in. Hg

Pitot Tube Leak Checks: PreTest _____ @ _____ in. H_2O; Post Test _____ @ _____ in. H_2O

CONSOL ENERGY

NOTE: Purge for 10 minutes at end of sampling.

ONTARIO HYDRO Hg SAMPLING AND SPECIATION FIELD DATA SHEET

Page ____ of ____

TEST ID	AHO -
PLANT	SCR/FGD Plant 8
LOCATION	Air Heater Outlet
DATE	7/[illegible]/04
OPERATOR(S)	[illegible]
AMBIENT TEMP [°F]	[illegible]
BAR. PRESS. [" Hg]	[illegible]

METER BOX	[illegible]
PITOT TUBE DESC	[illegible]
PROBE LENGTH [ft]	
NOZZLE ID [inch]	[illegible]
%H_2O (Assumed)	
FILTER ID	
K FACTOR	[illegible]

CAL. DATA: delta H	[illegible]		
Y	[illegible]		
C(p)	[illegible]		
FILTER BOX SETTING	NA		
PROBE HTR SETTING	325		
DUCT X-SECTION	circ ?	rect ?	other:
DUCT DIMENSIONS	72"x956" (x2)	DUCT AREA	956 ft^2

Comments: _____

TRAVERSE POINT [port-inch]	CLOCK TIME (24-hr)	SAMPLE TIME [minute]	STATIC PRES [" H_2O]	PITOT HEAD [" H_2O]	METER DIFF PRESSURE [" H_2O]	METER VACUUM [" Hg]	METER READING [ft^3]	METER TEMP [oF] inlet	METER TEMP [oF] outlet	STACK TEMP [°F]	PROBE TEMP [°F]	FILTER BOX [°F]	LAST IMP TEMP [°F]	METER EXHAUST O_2 [% vol]	METER EXHAUST CO_2 [% vol]
	[illegible]	0					[illegible]								
[illegible]	[illegible]	10		[illegible]	[illegible]	[illegible]	606.43	[illegible]	[illegible]	[illegible]			[illegible]		
	[illegible]	20	[illegible]	[illegible]	[illegible]	[illegible]	613.48	[illegible]	[illegible]	[illegible]			[illegible]	[illegible]	[illegible]
	[illegible]	30		[illegible]	[illegible]	[illegible]	618.36	[illegible]	[illegible]	[illegible]			[illegible]		[illegible]
	[illegible]	40	[illegible]	[illegible]	[illegible]	[illegible]	[illegible]	[illegible]	[illegible]	[illegible]			[illegible]	[illegible]	15.[illegible]
	[illegible]	50		[illegible]	[illegible]	17.5	[illegible]	[illegible]	[illegible]	[illegible]			[illegible]		
	[illegible]	60													
	[illegible]						[illegible]								
	[illegible]	70		[illegible]	[illegible]	[illegible]	[illegible]	[illegible]	[illegible]	[illegible]			[illegible]		
	[illegible]	80	[illegible]	[illegible]	[illegible]	[illegible]	[illegible]	[illegible]	[illegible]	[illegible]			[illegible]	[illegible]	[illegible]
	[illegible]	90		[illegible]	[illegible]	[illegible]	[illegible]	[illegible]	[illegible]	[illegible]			[illegible]		
	[illegible]	100		[illegible]	[illegible]	[illegible]	[illegible]	[illegible]	[illegible]	[illegible]			[illegible]	[illegible]	[illegible]
	[illegible]	110	[illegible]	[illegible]	[illegible]	[illegible]	[illegible]	[illegible]	[illegible]	[illegible]			[illegible]		
	[illegible]	120		[illegible]	[illegible]	5	49.71	[illegible]	[illegible]	[illegible]			[illegible]	[illegible]	[illegible]
	[illegible]	130	[illegible]	[illegible]	[illegible]	[illegible]	[illegible]	[illegible]	[illegible]	[illegible]			[illegible]		
AVERAGE		[illegible]	[illegible]	[illegible]	[illegible]		[illegible]	[illegible]	[illegible]	[illegible]				[illegible]	[illegible]

Sample Train Leak Checks: Pre Test [illegible] ft^3 @ [illegible] in. Hg; Post Test [illegible] ft^3 @ [illegible] in. Hg

Pitot Tube Leak Checks: PreTest [illegible] @ ____ in. H_2O; Post Test [illegible] @ ____ in. H_2O

CONSOLENERGY

NOTE: Purge for 10 minutes at end of sampling.

ONTARIO HYDRO Hg SAMPLING AND SPECIATION FIELD DATA SHEET

Page _____ of _____

TEST ID	STK -
PLANT	SCR/FGD Plant 8
LOCATION	Stack
DATE	7-20-04
OPERATOR(S)	B.S., D.C.
AMBIENT TEMP [°F]	108°
BAR. PRESS. [" Hg]	28.85

METER BOX	
PITOT TUBE DESC	
PROBE LENGTH [ft]	
NOZZLE ID [inch]	
%H_2O (Assumed)	
FILTER ID	#1
K FACTOR	

CAL. DATA: delta H	
Y	
C(p)	
FILTER BOX SETTING	250
PROBE HTR SETTING	250
DUCT X-SECTION	circ ? rect ? other:
DUCT DIMENSIONS	26 ft ID
DUCT AREA	530.929 ft^2

Comments:

TRAVERSE POINT [port-inch]	CLOCK TIME (24-hr)	SAMPLE TIME [minute]	STATIC PRES [" H_2O]	PITOT HEAD [" H_2O]	METER DIFF PRESSURE [" H_2O]	METER VACUUM [" Hg]	METER READING [ft^3]	METER TEMP [oF] (6) inlet	METER TEMP [oF] (7) outlet	STACK TEMP [°F] (1)	PROBE TEMP [°F] (2)	FILTER BOX [°F] (3)	LAST IMP TEMP [°F] (4)	METER EXHAUST O_2 [% vol]	METER EXHAUST CO_2 [% vol]
	1300	0					133.80								
-13.73		10		1.40	1.68	3.0	141.40	108	111	123	246	249	49	7.4	12.8
-45.55		20	-1.725	1.60	1.89	3.5	148.82	111	115	123	246	249	49	7.1	12.9
(A) -92.35		30		1.60	1.89	3.5	156.22	114	119	123	246	249	51	7.5	12.8
							156.35								
-13.73		40		1.20	1.42	2.5	162.88	117	123	122	251	248	51	7.3	12.9
-45.55		50	-1.489	1.40	1.68	3.0	169.86	120	124	122	249	248	51	7.5	12.8
(B) -92.35		60		1.40	1.68	3.0	176.90	121	125	123	190	248	53	7.3	12.8
							177.06								
-13.73		70		1.20	1.42	2.5	183.59	121	126	122	246	249	53	7.4	12.8
-45.55		80	-1.636	1.60	1.89	3.5	191.03	123	126	122	246	249	49	7.4	12.9
(C) -92.35		90		1.60	1.89	3.5	198.46	123	126	123	210	248	49	7.5	12.8
							199.10								
							~~198.46~~ RC								
-13.73		100		1.40	1.68	3.0	206.24	120	118	122	245	249	54	7.2	13.0
-45.55		110	-1.477	1.60	1.89	3.5	213.68	121	117	122	243	251	54	7.4	12.8
(D) -92.35	1608	120		1.60	1.89	3.5	221.12	122	117	123	213	250	57	7.4	12.9
AVERAGE															

Sample Train Leak Checks: Pre Test OK ft^3 @ 10 in. Hg; Post Test OK ft^3 @ 10 in. Hg

Pitot Tube Leak Checks: PreTest OK @ 7 in. H_2O; Post Test OK @ 7 in. H_2O

CONSOL ENERGY

NOTE: Purge for 10 minutes at end of sampling.

ONTARIO HYDRO Hg SAMPLING AND SPECIATION FIELD DATA SHEET

Page _____ of _____

TEST ID	SCR - Two
PLANT	SCR/FGD Plant 8
LOCATION	SCR Inlet
DATE	7/21/04
OPERATOR(S)	JMZ LWR
AMBIENT TEMP [°F]	89
BAR. PRESS. [" Hg]	28.90

METER BOX	[illegible]
PITOT TUBE DESC	[illegible]
PROBE LENGTH [ft]	[illegible]
NOZZLE ID [inch]	[illegible]
%H_2O (Assumed)	[illegible]
FILTER ID	2
K FACTOR	0.97

CAL. DATA: delta H	
Y	
C(p)	
FILTER BOX SETTING	325
PROBE HTR SETTING	325
DUCT X-SECTION	circ ? / rect ? / other:
DUCT DIMENSIONS	159x362 (x2)
DUCT AREA	799.42 ft^2

Comments:

TRAVERSE POINT [port-inch]	CLOCK TIME (24-hr)	SAMPLE TIME [minute]	STATIC PRES [" H_2O]	PITOT HEAD [" H_2O]	METER DIFF PRESSURE [" H_2O]	METER VACUUM [" Hg]	METER READING [ft^3]	METER TEMP [oF] (6) inlet	METER TEMP [oF] (7) outlet	STACK TEMP (1) [°F]	PROBE TEMP (2) [°F]	FILTER BOX (3) [°F]	LAST IMP TEMP (4) [°F]	METER EXHAUST O_2 [% vol]	METER EXHAUST CO_2 [% vol]
	10:15	0					496.60								
-26.5	10:25	10	-15.8	0.42	0.41	4.0	500.25	95	94	658	281	295	54	5.0	15.1
-79.5	10:35	20	-15.6	0.18	0.17	3.0	502.63	96	94	663	283	304	57	5.2	14.9
-132.5	[illegible]	30	-16.0	0.22	0.21	3.5	505.32	96	96	662	272	303	60	12.0	8.1
			leak	check	leak rate	~~[illegible]~~	0.093 cfm								
	[illegible]						[illegible]								
-26.5	[illegible]	40	[illegible]	[illegible]	[illegible]	[illegible]	[illegible]	[illegible]	[illegible]	[illegible]	[illegible]	[illegible]	[illegible]	[illegible]	[illegible]
-79.5	[illegible]	50	[illegible]	[illegible]	[illegible]	[illegible]	[illegible]	[illegible]	[illegible]	[illegible]	[illegible]	[illegible]	[illegible]	[illegible]	[illegible]
-132.5	[illegible]	60	[illegible]	[illegible]	[illegible]	[illegible]	[illegible]	[illegible]	[illegible]	[illegible]	[illegible]	[illegible]	[illegible]	[illegible]	[illegible]
	[illegible]						[illegible]								
-26.5	[illegible]	70	[illegible]	[illegible]	[illegible]	[illegible]	[illegible]	[illegible]	[illegible]	[illegible]	[illegible]	[illegible]	[illegible]	[illegible]	[illegible]
-79.5	[illegible]	80	[illegible]	[illegible]	[illegible]	[illegible]	[illegible]	[illegible]	[illegible]	[illegible]	[illegible]	[illegible]	[illegible]	[illegible]	[illegible]
-132.5	[illegible]	90	[illegible]	[illegible]	[illegible]	[illegible]	[illegible]	[illegible]	[illegible]	[illegible]	[illegible]	[illegible]	[illegible]	[illegible]	[illegible]
	[illegible]						[illegible]								
-26.5	[illegible]	100	[illegible]	[illegible]	[illegible]	[illegible]	[illegible]	[illegible]	[illegible]	[illegible]	[illegible]	[illegible]	[illegible]	[illegible]	[illegible]
-79.5	[illegible]	110	[illegible]	[illegible]	[illegible]	[illegible]	[illegible]	[illegible]	[illegible]	[illegible]	[illegible]	[illegible]	[illegible]	[illegible]	[illegible]
-132.5		120													
AVERAGE			-15.7	0.324	0.324		3.548		95.1	656.1				7.3	[illegible]

Sample Train Leak Checks: Pre Test [illegible] ft^3 @ [illegible] in. Hg; Post Test [illegible] ft^3 @ [illegible] in. Hg

Pitot Tube Leak Checks: PreTest [illegible] @ _____ in. H_2O; Post Test _____ @ _____ in. H_2O

CONSOL ENERGY

NOTE: Purge for 10 minutes at end of sampling.

ONTARIO HYDRO Hg SAMPLING AND SPECIATION FIELD DATA SHEET

Page _____ of _____

TEST ID	AHO - 2
PLANT	SCR/FGD Plant 8
LOCATION	Air Heater Outlet
DATE	7/21/04
OPERATOR(S)	[illegible]
AMBIENT TEMP [°F]	73
BAR. PRESS. [" Hg]	[illegible]

METER BOX	N-4
PITOT TUBE DESC	
PROBE LENGTH [ft]	6
NOZZLE ID [inch]	
%H_2O (Assumed)	
FILTER ID	[illegible]
K FACTOR	[illegible]

CAL. DATA: delta H	1.932
Y	0.966
C(p)	
FILTER BOX SETTING	NA
PROBE HTR SETTING	325
DUCT X-SECTION	circ ? / rect ? / other:
DUCT DIMENSIONS	72"x956" (x2)
DUCT AREA	956 ft^2

Comments: [illegible]

TRAVERSE POINT [port-inch]	CLOCK TIME (24-hr)	SAMPLE TIME [minute]	STATIC PRES [" H_2O]	PITOT HEAD [" H_2O]	METER DIFF PRESSURE [" H_2O]	METER VACUUM [" Hg]	METER READING [ft^3]	METER TEMP [oF] inlet	METER TEMP [oF] outlet	STACK TEMP [°F]	PROBE TEMP [°F]	FILTER BOX [°F]	LAST IMP TEMP [°F]	METER EXHAUST O_2 [% vol]	METER EXHAUST CO_2 [% vol]
	1015	0					57.55								
	1025	10		0.31	0.24	1	62.65	75	72	215			58		
	1035	20	34.5	0.31	0.24	4.5	[illegible]	75	72	220			54		
	1045	30		0.31	0.24	5	68.41	77	74	220			52		
	1055	40	34.7	0.31	0.24	5	71.26	78	74	220			52	6.0	14.1
	1105	50		0.31	0.24	5	74.11	80	76	223			53		
	1115	60	34.0	0.31	0.24	5	77.03	81	77	223			54	6.4	13.7
Leak Check		OK @	30	124°		7	62 → ~~77.65~~	← 78.62							
	1258	70		1.30	0.99	7.5	84.21	84	82	308			51		
	1308	80	33.5	1.30	0.99	10	89.81	87	82	308			49	3.7	16.4
	1318	90		1.30	0.99	14	95.43	88	83	309			51		
	1328	100	33.7	1.30	0.99	15	101.04	90	84	310			53	4.0	16.0
	1338	110	33.9	1.30	0.99	18.5	106.59	90	84	310			55	4.1	16.0
	1348	120													
AVERAGE		110	[illegible]	[illegible]	[illegible]		[illegible]	[illegible]	[illegible]	[illegible]				[illegible]	[illegible]

Sample Train Leak Checks: Pre Test [illegible] ft^3 @ [illegible] in. Hg; Post Test OK ft^3 @ 15 in. Hg

Pitot Tube Leak Checks: PreTest [illegible] @ [illegible] in. H_2O; Post Test [illegible] @ [illegible] in. H_2O

CONSOL ENERGY

NOTE: Purge for 10 minutes at end of sampling.

ONTARIO HYDRO Hg SAMPLING AND SPECIATION FIELD DATA SHEET

Page _____ of _____

TEST ID	STK -
PLANT	SCR/FGD Plant 8
LOCATION	Stack
DATE	7-21-04
OPERATOR(S)	B.S., D.C.
AMBIENT TEMP [°F]	~106°
BAR. PRESS. [" Hg]	28.90

METER BOX	U-5
PITOT TUBE DESC	E-1
PROBE LENGTH [ft]	8'
NOZZLE ID [inch]	0.191 3/16 D
%H_2O (Assumed)	
FILTER ID	# 2
K FACTOR	1.20

CAL. DATA: delta H	2.009
Y	1.006
C(p)	0.838
FILTER BOX SETTING	250
PROBE HTR SETTING	250
DUCT X-SECTION	circ ? rect ? other:
DUCT DIMENSIONS	26 ft ID
DUCT AREA	530.929 ft^2

Comments:

	TRAVERSE POINT [port-inch]	CLOCK TIME (24-hr)	SAMPLE TIME [minute]	STATIC PRES [" H_2O]	PITOT HEAD [" H_2O]	METER DIFF PRESSURE [" H_2O]	METER VACUUM [" Hg]	METER READING [ft^3]	METER TEMP (6) [oF] (7) inlet	METER TEMP (6) [oF] (7) outlet	STACK TEMP (1) [°F]	PROBE TEMP (2) [°F]	FILTER BOX (3) [°F]	LAST IMP TEMP (4) [°F]	METER EXHAUST O_2 [% vol]	METER EXHAUST CO_2 [% vol]
		1015	0					228.90								
	-13.73		10		1.40	1.68	3.0	236.02	108	109	123	251	249	51	7.3	12.9
D	-45.55		20	-1.492	1.70	2.02	4.0	243.64	111	110	123	245	249	54	7.5	12.8
	-92.35		30		1.60	1.90	4.0	251.12	114	111	124	219	249	59	7.4	12.8
								251.30								
	-13.73		40		1.20	1.42	3.0	257.86	115	114	124	249	251	52	7.4	12.9
C	-45.55		50	-1.448	1.60	1.90	3.5	265.27	117	115	124	245	250	50	7.3	12.9
	-92.35	1124	60		1.60	1.90	4.0	272.71	118	116	124	246	249	51	7.5	12.9
		1250						272.90								
	-13.73		70		1.20	1.42	3.0	279.39	111	111	124	252	249	54	7.2	12.9
B	-45.55		80	-1.481	1.40	1.68	3.5	286.41	114	112	124	257	250	53	7.3	12.9
	-92.35		90		1.40	1.68	3.5	293.39	116	113	124	219	250	57	7.2	13.0
								293.70								
	-13.73		100		1.40	1.68	3.5	300.77	117	115	124	250	251	55	7.2	13.0
A	-45.55		110	-1.394	1.60	1.90	4.0	308.22	118	115	124	243	251	63	7.1	13.1
	-92.35	1358	120		1.60	1.90	4.0	315.65	118	115	124	246	251	62	7.3	12.9
AVERAGE				[illegible]	[illegible]	[illegible]		[illegible]			[illegible]					[illegible]

Sample Train Leak Checks: Pre Test OK ft^3 @ 10 in. Hg; Post Test OK ft^3 @ 10 in. Hg

Pitot Tube Leak Checks: PreTest OK @ 7 in. H_2O; Post Test OK @ 7 in. H_2O

CONSOLENERGY

NOTE: Purge for 10 minutes at end of sampling.

ONTARIO HYDRO Hg SAMPLING AND SPECIATION FIELD DATA SHEET

Page _____ of _____

TEST ID	SCR - [illegible]
PLANT	SCR/FGD Plant 8
LOCATION	SCR Inlet
DATE	[illegible]
OPERATOR(S)	[illegible]
AMBIENT TEMP [°F]	[illegible]
BAR. PRESS. [" Hg]	[illegible]

METER BOX	N-1
PITOT TUBE DESC	S-4
PROBE LENGTH [ft]	12
NOZZLE ID [inch]	7/32 0.222
%H_2O (Assumed)	9.3
FILTER ID	[illegible]
K FACTOR	[illegible]

CAL. DATA: delta H	1.981		
Y	0.984		
C(p)	0.843		
FILTER BOX SETTING	325		
PROBE HTR SETTING	325		
DUCT X-SECTION	circ ?	rect ?	other:
DUCT DIMENSIONS	159x362 (x2)	DUCT AREA	799.42 ft^2

Comments: _____

TRAVERSE POINT [port-inch]	CLOCK TIME (24-hr)	SAMPLE TIME [minute]	STATIC PRES [" H_2O]	PITOT HEAD [" H_2O]	METER DIFF PRESSURE [" H_2O]	METER VACUUM [" Hg]	METER READING [ft^3]	METER TEMP [oF] inlet	METER TEMP [oF] outlet	STACK TEMP [°F]	PROBE TEMP [°F]	FILTER BOX [°F]	LAST IMP TEMP [°F]	METER EXHAUST O_2 [% vol]	METER EXHAUST CO_2 [% vol]
	[illegible]	0					[illegible]								
-26.5	[illegible]	10	[illegible]	[illegible]	[illegible]	[illegible]	[illegible]	[illegible]	[illegible]	[illegible]	[illegible]	[illegible]	[illegible]	[illegible]	[illegible]
-79.5	[illegible]	20	[illegible]	[illegible]	[illegible]	[illegible]	[illegible]	[illegible]	[illegible]	[illegible]	[illegible]	[illegible]	[illegible]	[illegible]	[illegible]
-132.5	[illegible]	30	[illegible]	[illegible]	[illegible]	[illegible]	[illegible]	[illegible]	[illegible]	[illegible]	[illegible]	[illegible]	[illegible]	[illegible]	[illegible]
				[illegible]	[illegible]										
	[illegible]						[illegible]								
-26.5	[illegible]	40	[illegible]	[illegible]	[illegible]	[illegible]	[illegible]	[illegible]	[illegible]	[illegible]	[illegible]	[illegible]	[illegible]	[illegible]	[illegible]
-79.5	[illegible]	50	[illegible]	[illegible]	[illegible]	[illegible]	[illegible]	[illegible]	[illegible]	[illegible]	[illegible]	[illegible]	[illegible]	[illegible]	[illegible]
-132.5	[illegible]	60	[illegible]	[illegible]	[illegible]	[illegible]	[illegible]	[illegible]	[illegible]	[illegible]	[illegible]	[illegible]	[illegible]	[illegible]	[illegible]
				[illegible]	[illegible]	[illegible]									
	[illegible]						[illegible]								
-26.5	[illegible]	70	[illegible]	[illegible]	[illegible]	[illegible]	[illegible]	[illegible]	[illegible]	[illegible]	[illegible]	[illegible]	[illegible]	[illegible]	[illegible]
-79.5	[illegible]	80	[illegible]	[illegible]	[illegible]	[illegible]	[illegible]	[illegible]	[illegible]	[illegible]	[illegible]	[illegible]	[illegible]	[illegible]	[illegible]
-132.5	[illegible]	90	[illegible]	[illegible]	[illegible]	[illegible]	[illegible]	[illegible]	[illegible]	[illegible]	[illegible]	[illegible]	[illegible]	[illegible]	[illegible]
	[illegible]			[illegible]	[illegible]	[illegible]	[illegible]						[illegible]		
-26.5	[illegible]	100	[illegible]	[illegible]	[illegible]	[illegible]	[illegible]	[illegible]	[illegible]	[illegible]	[illegible]	[illegible]	[illegible]	[illegible]	[illegible]
-79.5	[illegible]	110	[illegible]	[illegible]	[illegible]	[illegible]	[illegible]	[illegible]	[illegible]	[illegible]	[illegible]	[illegible]	[illegible]	[illegible]	[illegible]
-132.5	[illegible]	120	[illegible]	[illegible]	[illegible]	[illegible]	[illegible]	[illegible]	[illegible]	[illegible]	[illegible]	[illegible]	[illegible]	[illegible]	[illegible]
AVERAGE			[illegible]	[illegible]	[illegible]		[illegible]		[illegible]	[illegible]				[illegible]	[illegible]

Sample Train Pre Test [illegible] ft^3 @ _____ in. Hg

Leak Checks: Post Test _____ ft^3 @ _____ in. Hg

Pitot Tube PreTest _____ @ _____ in. H_2O

Leak Checks: Post Test _____ @ _____ in. H_2O

CONSOL ENERGY

NOTE: Purge for 10 minutes at end of sampling.

[illegible]

ONTARIO HYDRO Hg SAMPLING AND SPECIATION FIELD DATA SHEET

Page _____ of _____

TEST ID	AHO -
PLANT	SCR/FGD Plant 8
LOCATION	Air Heater Outlet
DATE	7/21/04
OPERATOR(S)	JEL / DJK
AMBIENT TEMP [°F]	87
BAR. PRESS. [" Hg]	28.86

METER BOX	
PITOT TUBE DESC	
PROBE LENGTH [ft]	
NOZZLE ID [inch]	
%H_2O (Assumed)	
FILTER ID	10 / 11
K FACTOR	

CAL. DATA: delta H			
Y			
C(p)			
FILTER BOX SETTING	NA		
PROBE HTR SETTING	325		
DUCT X-SECTION	circ ?	rect ?	other:
DUCT DIMENSIONS	72"x956" (x2)	DUCT AREA	956 ft^2

Comments: _____

TRAVERSE POINT [port-inch]	CLOCK TIME (24-hr)	SAMPLE TIME [minute]	STATIC PRES [" H_2O]	PITOT HEAD [" H_2O]	METER DIFF PRESSURE [" H_2O]	METER VACUUM [" Hg]	METER READING [ft^3]	METER TEMP [oF] inlet (6)	METER TEMP [oF] outlet (7)	STACK TEMP [°F] (1)	PROBE TEMP [°F] (2)	FILTER BOX [°F]	LAST IMP TEMP [°F] (4)	METER EXHAUST O_2 [% vol]	METER EXHAUST CO_2 [% vol]
	1540	0					114.61								
A	1550	10		1.3	0.99	5	120.56	88	87	306			69		
	1600	20	33.5	1.3	1.0	7.5	126.22	90	87	306			54	4.2	15.8
	1610	30		1.3	1.0	9	131.87	92	87	307			58		
	1620	40	33.9	1.3	1.0	11	137.54	93	87	306			60	4.5	15.5
	1630	50		1.3	1.0	14	143.31	95	89	307			62		
	1640	60	33.7	1.3	1.0	16.5	148.90	95	89	307			63	4.6	15.5
Leak check - OK															
B	1702						149.38								
	1712	70		0.28	0.22	4	152.40	92	90	219			55		
	1722	80	33.6	0.28	0.22	4.5	155.26	92	90	218			53	7.9	12.3
	1732	90		0.28	0.22	4.5	158.12	93	90	218			51		
	1742	100	33.7	0.28	0.22	4.5	160.98	93	90	219			52	8.1	12.1
	1752	110		0.28	0.22	4.5	163.85	93	90	220			52		
	1802	120	33.8	0.28	0.22	5	166.69	94	90	220			52	8.1	12.1
				RUN											
AVERAGE		120	33.7	0.280	0.223		51.60	92.7	88.8	222				8.2	12.2

Sample Train	Pre Test	OK ft^3	@ 15 in. Hg	Pitot Tube	PreTest	OK	@ 7.5 in. H_2O
Leak Checks:	Post Test	OK ft^3	@ 17 in. Hg	Leak Checks:	Post Test	OK	@ 2 in. H_2O

CONSOL ENERGY

NOTE: Purge for 10 minutes at end of sampling.

ONTARIO HYDRO Hg SAMPLING AND SPECIATION FIELD DATA SHEET

Page _____ of _____

TEST ID	STK - 3
PLANT	SCR/FGD Plant 8
LOCATION	Stack
DATE	7-21-04
OPERATOR(S)	B.S., D.C.
AMBIENT TEMP [°F]	~108°
BAR. PRESS. [" Hg]	28.85

METER BOX	5
PITOT TUBE DESC	E-1
PROBE LENGTH [ft]	8'
NOZZLE ID [inch]	0.191 3/16 D
%H_2O (Assumed)	
FILTER ID	#3
K FACTOR	1.20

CAL. DATA: delta H	2.009
Y	1.006
C(p)	0.838
FILTER BOX SETTING	250
PROBE HTR SETTING	250
DUCT X-SECTION	circ ? / rect ? / other:
DUCT DIMENSIONS	26 ft ID
DUCT AREA	530.929 ft^2

Comments:

TRAVERSE POINT [port-inch]	CLOCK TIME (24-hr)	SAMPLE TIME [minute]	STATIC PRES [" H_2O]	PITOT HEAD [" H_2O]	METER DIFF PRESSURE [" H_2O]	METER VACUUM [" Hg]	METER READING [ft^3]	METER TEMP (6) [oF] (7) inlet	METER TEMP (6) [oF] (7) outlet	STACK TEMP (1) [°F]	PROBE TEMP (2) [°F]	FILTER BOX (3) [°F]	LAST IMP TEMP (4) [°F]	METER EXHAUST O_2 [% vol]	METER EXHAUST CO_2 [% vol]
	1540	0					323.20								
-13.73		10		1.40	1.68	3.0	330.23	111	111	123	246	252	57	7.5	12.6
(A) -45.55		20	-1.193	1.60	1.90	3.5	337.65	113	112	124	244	252	60	7.3	12.9
-92.35		30		1.60	1.90	3.5	345.05	114	112	124	249	251	58	7.3	12.8
							345.20								
-13.73		40		1.40	1.68	3.0	352.30	115	114	124	245	251	57	7.4	12.8
(B) -45.55		50	-1.228	1.40	1.68	3.0	359.35	117	115	123	244	250	57	7.6	12.7
-92.35		60		1.40	1.68	3.0	366.34	118	116	124	232	250	58	7.4	12.8
							366.50								
-13.73		70		1.40	1.68	3.0	373.57	118	117	123	245	250	54	7.2	12.9
(C) -45.55		80	-1.193	1.60	1.90	3.5	380.95	119	117	124	249	250	52	7.4	12.8
-92.35		90		1.60	1.90	3.5	388.37	119	117	124	247	250	52	7.1	13.1
							388.50								
-13.73		100		1.60	1.90	3.5	395.90	118	117	124	247	251	53	7.4	12.8
(D) -45.55		110	-1.280	1.70	2.02	4.0	403.59	120	117	124	245	250	55	7.4	12.7
-92.35	1805	120		1.60	1.90	4.0	411.10	120	117	124	241	249	58	7.4	12.8
AVERAGE															

Sample Train Leak Checks: Pre Test OK ft^3 @ 10 in. Hg; Post Test OK ft^3 @ 10 in. Hg

Pitot Tube Leak Checks: PreTest OK @ 7 in. H_2O; Post Test OK @ 7 in. H_2O

CONSOL ENERGY

NOTE: Purge for 10 minutes at end of sampling.

ONTARIO HYDRO Hg SAMPLING AND SPECIATION FIELD DATA SHEET

Page 1 of ____

TEST ID	SCR - [illegible]
PLANT	SCR/FGD Plant 8
LOCATION	SCR Inlet
DATE	[illegible]
OPERATOR(S)	[illegible]
AMBIENT TEMP [°F]	[illegible]
BAR. PRESS. [" Hg]	[illegible]

METER BOX	[illegible]
PITOT TUBE DESC	[illegible]
PROBE LENGTH [ft]	[illegible]
NOZZLE ID [inch]	[illegible]
%H_2O (Assumed)	[illegible]
FILTER ID	[illegible]
K FACTOR	0.96

CAL. DATA: delta H	[illegible]
Y	[illegible]
C(p)	[illegible]
FILTER BOX SETTING	325
PROBE HTR SETTING	325
DUCT X-SECTION	circ ? rect ? other:
DUCT DIMENSIONS	159x362 (x2) DUCT AREA 799.42 ft^2

Comments: ____

TRAVERSE POINT [port-inch]	CLOCK TIME (24-hr)	SAMPLE TIME [minute]	STATIC PRES [" H_2O]	PITOT HEAD [" H_2O]	METER DIFF PRESSURE [" H_2O]	METER VACUUM [" Hg]	METER READING [ft^3]	METER TEMP [oF] inlet	METER TEMP [oF] outlet	STACK TEMP [°F]	PROBE TEMP [°F]	FILTER BOX [°F]	LAST IMP TEMP [°F]	METER EXHAUST O_2 [% vol]	METER EXHAUST CO_2 [% vol]
	[illegible]	0					[illegible]								
-26.5	[illegible]	10	[illegible]	[illegible]	[illegible]	[illegible]	[illegible]	[illegible]	[illegible]	[illegible]	[illegible]	[illegible]	[illegible]	[illegible]	
-79.5	[illegible]	20	[illegible]	[illegible]	[illegible]	[illegible]	[illegible]	[illegible]	[illegible]	[illegible]	[illegible]	[illegible]	[illegible]	[illegible]	
~~-132.5~~	[illegible]	30	[illegible]	[illegible]	[illegible]	[illegible]	[illegible]	[illegible]	[illegible]	[illegible]	[illegible]	[illegible]	[illegible]	[illegible]	[illegible]
			[illegible]												
	[illegible]						[illegible]								
-26.5	[illegible]	40	[illegible]	[illegible]	0.25	[illegible]	[illegible]	[illegible]	[illegible]	[illegible]	[illegible]	[illegible]	[illegible]	[illegible]	[illegible]
-79.5	[illegible]	50	[illegible]	[illegible]	[illegible]	5.0	[illegible]	[illegible]	[illegible]	[illegible]	[illegible]	[illegible]	[illegible]	[illegible]	[illegible]
~~-132.5~~	[illegible]	60	[illegible]	[illegible]	[illegible]	[illegible]	[illegible]	[illegible]	[illegible]	[illegible]	[illegible]	[illegible]	[illegible]	[illegible]	[illegible]
			[illegible]												
	[illegible]						[illegible]								
-26.5	[illegible]	70	[illegible]	[illegible]	[illegible]	[illegible]	[illegible]	[illegible]	[illegible]	[illegible]	[illegible]	[illegible]	[illegible]	[illegible]	[illegible]
-79.5	[illegible]	80	[illegible]	[illegible]	[illegible]	5.0	[illegible]	[illegible]	[illegible]	[illegible]	[illegible]	[illegible]	[illegible]	[illegible]	[illegible]
~~-132.5~~	[illegible]	90	[illegible]	[illegible]	[illegible]	[illegible]	[illegible]	[illegible]	[illegible]	[illegible]	[illegible]	[illegible]	[illegible]	[illegible]	[illegible]
	[illegible]		[illegible]				[illegible]								
-26.5	[illegible]	100	[illegible]	[illegible]	[illegible]	[illegible]	[illegible]	[illegible]	[illegible]	[illegible]	[illegible]	[illegible]	[illegible]	[illegible]	[illegible]
-79.5	[illegible]	110	[illegible]	[illegible]	[illegible]	[illegible]	[illegible]	[illegible]	[illegible]	[illegible]	[illegible]	[illegible]	[illegible]	[illegible]	[illegible]
~~-132.5~~	[illegible]	120	[illegible]	[illegible]	[illegible]	[illegible]	[illegible]	[illegible]	[illegible]	[illegible]	[illegible]	[illegible]	[illegible]	[illegible]	[illegible]
AVERAGE			[illegible]	[illegible]	[illegible]		[illegible]		[illegible]	[illegible]				[illegible]	[illegible]

Sample Train Leak Checks: Pre Test [illegible] ft^3 @ [illegible] in. Hg; Post Test [illegible] ft^3 @ [illegible] in. Hg

Pitot Tube Leak Checks: PreTest ____ @ ____ in. H_2O; Post Test ____ @ ____ in. H_2O

CONSOLENERGY

NOTE: Purge for 10 minutes at end of sampling.

ONTARIO HYDRO Hg SAMPLING AND SPECIATION FIELD DATA SHEET

Page _____ of _____

TEST ID	AHO - [illegible]	METER BOX	[illegible] 4	CAL. DATA: delta H	[illegible]
PLANT	SCR/FGD Plant 8	PITOT TUBE DESC		Y	[illegible]
LOCATION	Air Heater Outlet	PROBE LENGTH [ft]	[illegible]	C(p)	
DATE	[illegible]	NOZZLE ID [inch]		FILTER BOX SETTING	NA
OPERATOR(S)	[illegible]	%H_2O (Assumed)		PROBE HTR SETTING	325
AMBIENT TEMP [°F]	78	FILTER ID	[illegible]	DUCT X-SECTION	circ ? / rect ? / other:
BAR. PRESS. [" Hg]	[illegible]	K FACTOR	[illegible]	DUCT DIMENSIONS	72"x956" (x2) DUCT AREA 956 ft^2

Comments: [illegible]

TRAVERSE POINT [port-inch]	CLOCK TIME (24-hr)	SAMPLE TIME [minute]	STATIC PRES [" H_2O]	PITOT HEAD [" H_2O]	METER DIFF PRESSURE [" H_2O]	METER VACUUM [" Hg]	METER READING [ft^3]	METER TEMP [oF] inlet	METER TEMP [oF] outlet	STACK TEMP [°F]	PROBE TEMP [°F]	FILTER BOX [°F]	LAST IMP TEMP [°F]	METER EXHAUST O_2 [% vol]	METER EXHAUST CO_2 [% vol]
	10:55	0					[illegible]								
B	10:45	10		0.20	[illegible]	4.5	[illegible]	72	71	233			53		
	10:55	20	320	0.20	[illegible]	4.5	171.11	74	71	235			51	[illegible]	14.2
	[illegible]	30		0.22	0.22	4.5	181.25	80	78	236			57		
	[illegible]	40	320	0.22	0.22	4.5	184.61	82	78	237			57	[illegible]	14.4
	[illegible]	50		[illegible]	[illegible]	5	187.35	83	80	237			58		
	11:35	60	319	0.28	0.22	5	190.11	84	80	237			59	5.7	14.4
	[illegible]	[illegible]													
A	11:53						190.65								
	12:03	70		1.3	1.0	7	196.26	87	82	324			53		
	12:13	80	324	1.25	0.96	8	200.81	89	83	326			51	5.4	14.7
	12:23	90		1.3	0.92	10	204.72	91	84	326			52		
	12:33	100	327	1.25	0.96	11	214.72	90	84	325			55	5.1	15
	12:43	110	[illegible]	1.2	0.92	12	220.10	89	84	325			56	5.0	14.7
	[illegible]	120		1.3	0.92	[illegible]	225.55	87	83	326			51		
AVERAGE		[illegible]	[illegible]	[illegible]	[illegible]		[illegible]	[illegible]	[illegible]	[illegible]				[illegible]	[illegible]

Sample Train Pre Test [illegible] ft^3 @ [illegible] in. Hg
Leak Checks: Post Test [illegible] ft^3 @ [illegible] in. Hg

Pitot Tube PreTest [illegible] @ [illegible] in. H_2O
Leak Checks: Post Test [illegible] @ [illegible] in. H_2O

CONSOLENERGY

NOTE: Purge for 10 minutes at end of sampling.

ONTARIO HYDRO Hg SAMPLING AND SPECIATION FIELD DATA SHEET

Page _____ of _____

TEST ID	STK - 4	METER BOX	~-5	CAL. DATA: delta H	2.009
PLANT	SCR/FGD Plant 8	PITOT TUBE DESC	E-1	Y	1.006
LOCATION	Stack	PROBE LENGTH [ft]	8'	C(p)	0.838
DATE	7-22-04	NOZZLE ID [inch]	0.191 3/16 D	FILTER BOX SETTING	250
OPERATOR(S)	B.S, D.C	%H_2O (Assumed)		PROBE HTR SETTING	250
AMBIENT TEMP [°F]	~ 105°	FILTER ID	# 4	DUCT X-SECTION	circ ? / rect ? / other:
BAR. PRESS. [" Hg]	28.78	K FACTOR	1.20	DUCT DIMENSIONS	26 ft ID / DUCT AREA 530.929 ft^2

Comments:

TRAVERSE POINT [port-inch]	CLOCK TIME (24-hr)	SAMPLE TIME [minute]	STATIC PRES [" H_2O]	PITOT HEAD [" H_2O]	METER DIFF PRESSURE [" H_2O]	METER VACUUM [" Hg]	METER READING [ft^3]	METER TEMP (6) [oF] (7) inlet	METER TEMP (6) [oF] (7) outlet	(1) STACK TEMP [°F]	(2) PROBE TEMP [°F]	(3) FILTER BOX [°F]	(4) LAST IMP TEMP [°F]	METER EXHAUST O_2 [% vol]	METER EXHAUST CO_2 [% vol]
	1035	0					418.60								
-13.73		10		1.40	1.68	3.5	425.74	108	110	128	245	255	61	7.4	12.7
-45.55		20	-1.618	1.60	1.90	4.0	433.28	111	111	129	247	252	61	7.4	12.9
(D) -92.35		30		1.60	1.90	4.0	440.81	113	112	129	235	251	55	7.4	12.8
							441.00								
-13.73		40		1.20	1.44	3.0	447.58	114	114	128	248	251	52	7.4	12.7
(C) -45.55		50	-1.452	1.40	1.68	3.5	454.65	116	115	129	246	250	52	7.3	12.9
-92.35		60		1.40	1.68	3.5	461.70	117	116	129	246	250	53	7.6	12.6
							461.90								
-13.73		70		1.40	1.68	3.5	469.03	117	116	128	245	251	54	7.5	12.7
(B) -45.55		80	-1.351	1.40	1.68	3.5	476.15	118	116	128	251	251	55	7.5	12.7
-92.35		90		1.40	1.68	3.5	483.25	118	117	129	204	251	57	7.5	12.7
							483.40								
-13.73		100		1.40	1.68	3.5	490.54	118	117	128	244	250	54	7.4	12.7
(A) -45.55		110	-1.593	1.60	1.90	4.0	498.14	119	117	128	250	251	54	7.5	12.6
-92.35		120		1.60	1.90	4.5	505.75	120	117	129	233	251	55	7.4	12.8
	1300														
AVERAGE															

Sample Train Leak Checks: Pre Test OK ft^3 @ 10 in. Hg; Post Test OK ft^3 @ 10 in. Hg

Pitot Tube Leak Checks: PreTest OK @ 7 in. H_2O; Post Test OK @ 7 in. H_2O

CONSOLENERGY

NOTE: Purge for 10 minutes at end of sampling.

Axial Flow Check

Location		Duct Ht, "		Barometric	
Date		Duct ID,"		Static	
Time		Duct Area	ft^2	Dry Bulb	
Tube I.D.		% O_2		Wet Bulb	
C-Factor		% CO_2		% H_20	
Operator(s)		% N_2		W.M.Wt	

PORT/ POINT	DISTANCE [" From Wall]	TEMP [°F]	DELTA P [" H_2O]	VELOCITY [Ft/Sec]	Null Angle
Average					
Maximum					
Minimum					
SDEV					

DATA SUMMARY	
Velocity, [fps]	
acfm	
scfm	
dscfm	
Ex Air Free cfm	
Est. MM Btu/hr Heat Input	
Est. Firing Rate, lb/hr	

Axial Flow Check

Location	~~SCR Inlet~~ STACK	Duct Ht, "		Barometric	28.80
Date	7-19-04	Duct ID,"		Static	
Time	1550-1619	Duct Area	ft²	Dry Bulb	
Tube I.D.	S-53	% O_2		Wet Bulb	
C-Factor		% CO_2		% H_2O	
Operator(s)	B.S.D.C	% N_2		W.M.Wt	

	PORT/ POINT	DISTANCE [" From Wall]	TEMP [°F]	DELTA P [" H_2O]	VELOCITY [Ft/Sec]	Null Angle	
	A-A-1	13.73	116.0		1.658		
	A-A-2	45.55	117.4		1.558		
(A)	A-A-3	92.35	117.9		1.639		-1.162
	A-B-1		119.0		1.200		
	A-B-2	"	119.6		1.436		
(B)	A-B-3		119.1		1.550		-0.9954
	A-C-1						
	A-C-2						
	A-C-3						
	A-D-1		119.8		1.540		
(C)	A-D-2	"	120.4		1.494		-1.482
	A-D-3		120.6		1.563		
	A-E-1		119.0		1.532		
	A-E-2	"	120.5		1.661		
(D)	A-E-3		120.6		1.509		-1.529
	A-F-1						
	A-F-2						
	A-F-3						
	A-G-1						
	A-G-2						
	A-G-3						
	A-H-1						
	A-H-2						
	A-H-3						
	Average						
	Maximum						
	Minimum						
	SDEV						

DATA SUMMARY	
Velocity, [fps]	
acfm	
scfm	
dscfm	
Ex Air Free cfm	
Est. MM Btu/hr Heat Input	
Est. Firing Rate, lb/hr	

Axial Flow Check

Location	SCR inlet	Duct Ht, "		Barometric	28.10
Date	7/20/04	Duct ID,"		Static	[illegible]
Time	09:08-10:15	Duct Area	ft²	Dry Bulb	
Tube I.D.	S-19	% O_2	4	Wet Bulb	
C-Factor	[illegible]	% CO_2	16.1	% H_2O	[illegible]
Operator(s)	[illegible]	% N_2	[illegible]	W.M.Wt	

	PORT/ POINT	DISTANCE [" From Wall]	TEMP [°F]	DELTA P [" H_2O]	VELOCITY [Ft/Sec]	Null Angle	SAAC
A side	C-1 ~~18.5~~	26.5	~~185~~ 657	0.2717	[illegible]		
	C-2 ~~72.5~~	79.5	644	0.2551			-15.42
	C-3	max	514	0.0681			
	D-1	26.5	531	0.4935			
	D-2	79.5	620	0.2791			-15.30
	D-3	max	640	0.3649			
B side	C-1	26.5	535	0.1104			
	C-2	79.5	605	0.3488			-15.89
	C-3	max	640	0.5381			
	D-1	26.5	600	0.5013			
	D-2	79.5	630	0.1621			-15.59
	D-3	max	640	0.1209			
Average			[illegible]	[illegible]	[illegible]		
Maximum			[illegible]	[illegible]			
Minimum			[illegible]	[illegible]			
SDEV							

DATA SUMMARY	
Velocity, [fps]	
acfm	
scfm	
dscfm	
Ex Air Free cfm	
Est. MM Btu/hr Heat Input	
Est. Firing Rate, lb/hr	

B

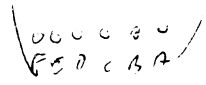

A

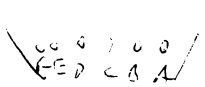

Harrison

Distribution: Withum - Locke
Project No.: 1621-87
Sample Date: 7-20-04

Location: SCR Inlet Task: _____ Test: 1 Operator: JAW/LWR

Sample ID	Bottle #	Description	Initial Vol mL	Rinse Vol mL	Gain mL	Final Vol mL	ppb Hg	Total ug of Hg
	S	Filter/Solids						
1	1A	Probe & Filter Rinse		88		88		
—	1B	Heated Line Rinse		—		—		
2	2	KCl Impingers	300	150	70	520		
3	3	HNO_3/H_2O_2 Impinger	100	75	0	175		
4	4	$KMnO_4$ Impingers	200	50	-2	248		
5	5	$KMnO_4$ Acid Rinse		100		100		

Filter Gross wt: 8.1546 g
Filter Tare wt: 1.5525 g
Filter Net wt: 6.6021 g

Filter Net wt: 6.6021 g
Probe/Line Rinse wt: 0 g
Total Particulate wt: 6.6021 g

Condensate Total: 77.9 ml

Recovered By: Jr

Date: 7-20-04

Location: Air Htr Out Task: _____ Test: 1 Operator: JEL/DJK

Sample ID	Bottle #	Description	Initial Vol mL	Rinse Vol mL	Gain mL	Final Vol mL	ppb Hg	Total ug of Hg
	S	Filter/Solids						
6	1A	Probe & Filter Rinse		112		112		
7	1B	Heated Line Rinse		128		128		
8	2	KCl Impingers	300	150	80	530		
9	3	HNO_3/H_2O_2 Impinger	100	75	-1	174		
10	4	$KMnO_4$ Impingers	200	50	-1	249		
11	5	$KMnO_4$ Acid Rinse		100		100		

Filter Gross wt: 12.6390 g
Filter Tare wt: 2.9860 g
Filter Net wt: 9.6530 g

Filter Net wt: 9.6530 g
Probe/Line Rinse wt: 0 g
Total Particulate wt: 9.6530 g

Condensate Total: 91.1 ml

Recovered By: Jr

Date: 7-20-04

Location: Stack Task: _____ Test: 1 Operator: BPS/DPC

Sample ID	Bottle #	Description	Initial Vol mL	Rinse Vol mL	Gain mL	Final Vol mL	ppb Hg	Total ug of Hg
	S	Filter/Solids						
12	1A	Probe & Filter Rinse		132		132		
—	1B	Heated Line Rinse		—		—		
13	2	KCl Impingers	300	150	258	708		
14	3	HNO_3/H_2O_2 Impinger	100	75	0	175		
15	4	$KMnO_4$ Impingers	200	50	-5	245		
16	5	$KMnO_4$ Acid Rinse		100		100		

Filter Gross wt: 0.4435 g
Filter Tare wt: 0.3967 g
Filter Net wt: 0.0468 g

Filter Net wt: 0.0468 g
Probe/Line Rinse wt: 0 g
Total Particulate wt: 0.0468 g

Condensate Total: 267.4 ml

Recovered By: Jr

Date: 7-20-04

Sample ID	Description	ppb Hg	Total ug of Hg
	3 in. Filter Blank		
	Thimble Blank		
17	KCl Blank		
18	HNO_3 / H2O2 Blank		
19	$KMnO_4$ Blank		
20	HNO_3 / HCl Blank		

Harrison

Distribution: Witham - Locke
Project No.: 1621-87
Sample Date: 7-21-04

Location: SCR Inlet Task: _____ Test: 2 Operator: JAW/LWR

Sample ID	Bottle #	Description	Initial Vol mL	Rinse Vol mL	Gain mL	Final Vol mL	ppb Hg	Total ug of Hg
	S	Filter/Solids						
21	1A	Probe & Filter Rinse		127		127		
—	1B	Heated Line Rinse		—		—		
22	2	KCl Impingers	300	150	69	519		
23	3	HNO_3/H_2O_2 Impinger	100	75	0	175		
24	4	$KMnO_4$ Impingers	200	50	-4	246		
25	5	$KMnO_4$ Acid Rinse		100		100		

Filter Gross wt: 2.9588 g
Filter Tare wt: 1.6219 g
Filter Net wt: 1.3369 g

Filter Net wt: 1.3369 g
Probe/Line Rinse wt: 2.1681 g
Total Particulate wt: 3.5050 g

Condensate Total: 70.7 ml

Recovered By: Jw

Date: 7-21-04

Location: Air Htr Out Task: _____ Test: 2 Operator: JEL/DJK

Sample ID	Bottle #	Description	Initial Vol mL	Rinse Vol mL	Gain mL	Final Vol mL	ppb Hg	Total ug of Hg
	S	Filter/Solids						
26	1A	Probe & Filter Rinse		126		126		
27	1B	Heated Line Rinse		157		157		
28	2	KCl Impingers	300	150	71	521		
29	3	HNO_3/H_2O_2 Impinger	100	75	1	176		
30	4	$KMnO_4$ Impingers	200	50	-4	246		
31	5	$KMnO_4$ Acid Rinse		100		100		

Filter Gross wt: 8.2195 g
Filter Tare wt: 1.4872 g
Filter Net wt: 6.7323 g

Filter Net wt: 6.7323 g
Probe/Line Rinse wt: 0 g
Total Particulate wt: 6.7323 g

Condensate Total: 78.0 ml

Recovered By: Jw

Date: 7-21-04

Location: Stack Task: _____ Test: 2 Operator: BPS/DPC

Sample ID	Bottle #	Description	Initial Vol mL	Rinse Vol mL	Gain mL	Final Vol mL	ppb Hg	Total ug of Hg
	S	Filter/Solids						
32	1A	Probe & Filter Rinse		113		113		
—	1B	Heated Line Rinse		—		—		
33	2	KCl Impingers	300	150	262	712		
34	3	HNO_3/H_2O_2 Impinger	100	75	1	176		
35	4	$KMnO_4$ Impingers	200	50	-5	245		
36	5	$KMnO_4$ Acid Rinse		100		100		

Filter Gross wt: 0.4292 g
Filter Tare wt: 0.4059 g
Filter Net wt: 0.0233 g

Filter Net wt: 0.0233 g
Probe/Line Rinse wt: 0 g
Total Particulate wt: 0.0233 g

Condensate Total: 274.7 ml

Recovered By: Jw

Date: 7-21-04

Sample ID	Description	ppb Hg	Total ug of Hg
	3 in. Filter Blank		
	Thimble Blank		
	KCl Blank		
	HNO_3 / H2O2 Blank		
37	$KMnO_4$ Blank		
	HNO_3 / HCl Blank		

Harrison

Distribution: Withum - Loche
Project No.: 1621-87
Sample Date: 7-21-04

Location: SCR Inlet Task: _____ Test: 3 Operator: JAW/LWR

Sample ID	Bottle #	Description	Initial Vol mL	Rinse Vol mL	Gain mL	Final Vol mL	ppb Hg	Total ug of Hg
	S	Filter/Solids						
38	1A	Probe & Filter Rinse		64		64		
—	1B	Heated Line Rinse		—		—		
39	2	KCl Impingers	300	150	77	527		
40	3	HNO_3/H_2O_2 Impinger	100	75	0	175		
41	4	$KMnO_4$ Impingers	200	50	-2	248		
42	5	$KMnO_4$ Acid Rinse		100		100		

Filter Gross wt: 7.3875 g
Filter Tare wt: 1.5321 g
Filter Net wt: 5.8554 g

Filter Net wt: 5.8554 g
Probe/Line Rinse wt: 0 g
Total Particulate wt: 5.8554 g

Condensate Total: 82.6 ml

Recovered By: Jw

Date: 7-21-04

Location: Air Htr Out Task: _____ Test: 3 Operator: JEL/DJK

Sample ID	Bottle #	Description	Initial Vol mL	Rinse Vol mL	Gain mL	Final Vol mL	ppb Hg	Total ug of Hg
	S	Filter/Solids						
43	1A	Probe & Filter Rinse		113		113		
44	1B	Heated Line Rinse		136		136		
45	2	KCl Impingers	300	150	84	534		
46	3	HNO_3/H_2O_2 Impinger	100	75	0	175		
47	4	$KMnO_4$ Impingers	200	50	-1	249		
48	5	$KMnO_4$ Acid Rinse		100		100		

Filter Gross wt: 12.4582 g
Filter Tare wt: 3.0408 g
Filter Net wt: 9.4174 g

Filter Net wt: 9.4174 g
Probe/Line Rinse wt: 0 g
Total Particulate wt: 9.4174 g

Condensate Total: 96.0 ml

Recovered By: Jw

Date: 7-21-04

Location: Stack Task: _____ Test: 3 Operator: BPS/DPC

Sample ID	Bottle #	Description	Initial Vol mL	Rinse Vol mL	Gain mL	Final Vol mL	ppb Hg	Total ug of Hg
	S	Filter/Solids						
49	1A	Probe & Filter Rinse		145		145		
—	1B	Heated Line Rinse		—		—		
50	2	KCl Impingers	300	150	270	720		
51	3	HNO_3/H_2O_2 Impinger	100	75	3	178		
52	4	$KMnO_4$ Impingers	200	50	-3	247		
53	5	$KMnO_4$ Acid Rinse		100		100		

Filter Gross wt: 0.4278 g
Filter Tare wt: 0.4009 g
Filter Net wt: 0.0269 g

Filter Net wt: 0.0269 g
Probe/Line Rinse wt: 0 g
Total Particulate wt: 0.0269 g

Condensate Total: 286.2 ml

Recovered By: Jw

Date: 7-21-04

Sample ID	Description	ppb Hg	Total ug of Hg
	3 in. Filter Blank		
	Thimble Blank		
	KCl Blank		
	HNO_3 / H2O2 Blank		
54	$KMnO_4$ Blank		
	HNO_3 / HCl Blank		

Distribution: Mitchum - Locke
Project No.: 1621-87
Sample Date: 7-22-04

Harrison

Location: SCR Inlet Task: _____ Test: 4 Operator: JAW/LWR

Sample ID	Bottle #	Description	Initial Vol mL	Rinse Vol mL	Gain mL	Final Vol mL	ppb Hg	Total ug of Hg
	S	Filter/Solids						
55	1A	Probe & Filter Rinse		75		75		
—	1B	Heated Line Rinse		—		—		
56	2	KCl Impingers	300	150	104	554		
57	3	HNO_3/H_2O_2 Impinger	100	75	0	175		
58	4	$KMnO_4$ Impingers	200	50	-3	247		
59	5	$KMnO_4$ Acid Rinse		100		100		

Filter Gross wt: 9.0790 g
Filter Tare wt: 1.5015 g
Filter Net wt: 7.5775 g

Filter Net wt: 7.5775 g
Probe/Line Rinse wt: 0 g
Total Particulate wt: 7.5775 g

Condensate Total: 107.9 ml

Recovered By: Jr

Date: 7-22-04

Location: Air Htr Out Task: _____ Test: 4 Operator: JEL/DJK

Sample ID	Bottle #	Description	Initial Vol mL	Rinse Vol mL	Gain mL	Final Vol mL	ppb Hg	Total ug of Hg
	S	Filter/Solids						
60	1A	Probe & Filter Rinse		131		131		
61	1B	Heated Line Rinse		116		116		
62	2	KCl Impingers	300	150	126	576		
63	3	HNO_3/H_2O_2 Impinger	100	75	0	175		
64	4	$KMnO_4$ Impingers	200	50	-4	246		
65	5	$KMnO_4$ Acid Rinse		100		100		

Filter Gross wt: 9.2587 g
Filter Tare wt: 1.4013 g
Filter Net wt: 7.8574 g

Filter Net wt: 7.8574 g
Probe/Line Rinse wt: 0 g
Total Particulate wt: 7.8574 g

Condensate Total: 132.6 ml

Recovered By: Jr

Date: 7-22-04

Location: Stack Task: _____ Test: 4 Operator: BPS/DPC

Sample ID	Bottle #	Description	Initial Vol mL	Rinse Vol mL	Gain mL	Final Vol mL	ppb Hg	Total ug of Hg
	S	Filter/Solids						
66	1A	Probe & Filter Rinse		156		156		
—	1B	Heated Line Rinse		—		—		
67	2	KCl Impingers	300	150	313	763		
68	3	HNO_3/H_2O_2 Impinger	100	75	0	175		
69	4	$KMnO_4$ Impingers	200	50	-6	244		
70	5	$KMnO_4$ Acid Rinse		100		100		

Filter Gross wt: 0.4310 g
Filter Tare wt: 0.4026 g
Filter Net wt: 0.0284 g

Filter Net wt: 0.0284 g
Probe/Line Rinse wt: 0 g
Total Particulate wt: 0.0284 g

Condensate Total: 321.9 ml

Recovered By: Jr

Date: 7-22-04

Sample ID	Description	ppb Hg	Total ug of Hg
	3 in. Filter Blank		
	Thimble Blank		
	KCl Blank		
	HNO_3 / H2O2 Blank		
71	$KMnO_4$ Blank		
	HNO_3 / HCl Blank		

Harrison

Distribution: Wathum - Locke
Project No.: 1621-87
Sample Date: 7-22-04

Location: SCR Inlet Task: _____ Test: _____ Operator: JAW/LWR

Sample ID	Bottle #	Description	Initial Vol mL	Rinse Vol mL	Gain mL	Final Vol mL	ppb Hg	Total ug of Hg
	S	Filter/Solids						
	1A	Probe & Filter Rinse						
	1B	Heated Line Rinse						
	2	KCl Impingers						
	3	HNO_3/H_2O_2 Impinger						
	4	$KMnO_4$ Impingers						
	5	$KMnO_4$ Acid Rinse						

Filter Gross wt: _____g Filter Net wt: _____g
Filter Tare wt: _____g Probe/Line Rinse wt: _____g Condensate Total: _____ ml
Filter Net wt: _____g Total Particulate wt: _____g

Recovered By: _____ Date: _____

Location: Air Htr Out Task: _____ Test: _____ Operator: JEL/DJK

Sample ID	Bottle #	Description	Initial Vol mL	Rinse Vol mL	Gain mL	Final Vol mL	ppb Hg	Total ug of Hg
	S	Filter/Solids						
	1A	Probe & Filter Rinse						
	1B	Heated Line Rinse						
	2	KCl Impingers						
	3	HNO_3/H_2O_2 Impinger						
	4	$KMnO_4$ Impingers						
	5	$KMnO_4$ Acid Rinse						

Filter Gross wt: _____g Filter Net wt: _____g
Filter Tare wt: _____g Probe/Line Rinse wt: _____g Condensate Total: _____ ml
Filter Net wt: _____g Total Particulate wt: _____g

Recovered By: _____ Date: _____

Location: Stack Task: _____ Test: _____ Operator: BPS/DPC

Sample ID	Bottle #	Description	Initial Vol mL	Rinse Vol mL	Gain mL	Final Vol mL	ppb Hg	Total ug of Hg
	S	Filter/Solids						
	1A	Probe & Filter Rinse						
	1B	Heated Line Rinse						
	2	KCl Impingers						
	3	HNO_3/H_2O_2 Impinger						
	4	$KMnO_4$ Impingers						
	5	$KMnO_4$ Acid Rinse						

Filter Gross wt: _____g Filter Net wt: _____g
Filter Tare wt: _____g Probe/Line Rinse wt: _____g Condensate Total: _____ ml
Filter Net wt: _____g Total Particulate wt: _____g

Recovered By: _____ Date: _____

7-22-04 Blank Impingers - on Heated Duct

Sample ID	Description Vol	ppb Hg	Total ug of Hg
	3 in. Filter Blank		
	Thimble Blank		
72	KCl Blank 450		
73	HNO_3 / H2O2 Blank 175		
74	$KMnO_4$ Blank 250		
75	HNO_3 / HCl Blank 100		

APPENDIX B

Plant Process Data

7/20/04 11:00	Gross MW 1e0388	Coal Flow Tons/Day pe1003	Feed Water Klb/hr 1f0194	Steam Flow klb/hr 1f0126	Steam Pressure psig 1p0125	Oxygen 1A1 % 1a2078	Oxygen 1A2 % 1a2079	Oxygen 1B1 % 1a2080	Oxygen 1B2 % 1a2081	SCR In Temp 1A Deg. F 1t5044	SCR In Temp 1B Deg. F 1t5544	SCR Out Temp 1A Deg. F 1t5048	SCR Out Temp 1B Deg. F 1t5548	Ahtr In Temp 1A Deg. F 1t0260	Ahtr In Temp 1B Deg. F 1t0288
20-Jul-04 11:00:00	671.91	5816.01	4710.14	4651.88	3550.16	3.73	5.48	4.88	4.74	682.21	660.22	671.91	659.81	648.33	662.26
20-Jul-04 11:15:00	671.76	5807.98	4689.50	4653.41	3552.56	3.20	5.34	4.89	5.02	682.35	660.19	673.26	659.70	648.59	662.23
20-Jul-04 11:30:00	673.88	5840.05	4699.38	4676.69	3550.03	3.28	5.21	4.90	4.82	682.50	660.01	674.82	659.59	648.85	662.21
20-Jul-04 11:45:00	673.47	5824.02	4723.70	4667.58	3550.06	3.40	5.23	4.89	5.00	682.64	659.80	675.86	659.47	649.10	662.19
20-Jul-04 12:00:00	671.37	5815.98	4746.85	4669.50	3550.86	3.44	5.27	4.87	4.91	682.76	659.71	675.95	659.35	649.36	662.17
20-Jul-04 12:15:00	671.90	5832.00	4740.69	4666.83	3548.89	3.36	5.32	4.85	4.78	682.80	660.01	676.26	659.24	649.62	662.14
20-Jul-04 12:30:00	672.72	5844.05	4726.38	4661.40	3550.47	3.51	5.37	4.84	4.61	682.83	660.35	676.51	659.38	649.87	662.12
20-Jul-04 12:45:00	672.95	5828.03	4714.10	4676.73	3550.53	3.49	5.35	4.82	4.42	682.86	660.69	676.83	659.63	650.13	662.10
20-Jul-04 13:00:00	672.26	5832.09	4701.82	4662.04	3549.56	3.64	5.31	4.80	4.55	682.89	660.98	676.80	659.89	650.39	662.07
20-Jul-04 13:15:00	672.43	5828.06	4689.54	4664.99	3549.56	3.42	5.18	4.79	4.39	672.39	661.12	666.93	660.08	650.64	662.05
20-Jul-04 13:30:00	673.58	5851.99	4678.88	4649.85	3551.58	3.63	5.01	4.77	4.64	666.13	661.27	660.05	660.11	650.90	662.03
20-Jul-04 13:45:00	672.23	5840.06	4698.52	4656.71	3550.80	3.49	5.14	4.75	4.65	666.02	661.45	660.00	660.14	651.16	662.01
20-Jul-04 14:00:00	671.11	5844.05	4728.95	4662.66	3550.99	3.61	5.15	4.74	4.53	665.92	661.61	659.91	660.16	651.41	661.98
20-Jul-04 14:15:00	672.19	5839.99	4738.91	4684.05	3549.56	3.40	4.98	4.72	4.64	665.91	661.60	659.28	660.18	651.67	661.96
20-Jul-04 14:30:00	673.96	5848.00	4739.16	4697.89	3551.57	3.46	5.16	4.70	4.81	665.94	661.55	659.15	660.21	651.93	661.94
20-Jul-04 14:45:00	673.10	5839.99	4739.40	4696.51	3550.38	3.20	5.33	4.68	4.75	665.97	661.51	659.13	660.23	652.18	661.91
20-Jul-04 15:00:00	673.85	5828.06	4739.65	4707.42	3551.92	3.36	5.13	4.67	4.69	666.01	661.47	659.17	660.25	652.39	661.89
20-Jul-04 15:15:00	673.74	5840.06	4738.52	4707.70	3550.44	3.36	5.15	4.65	4.60	666.04	661.42	659.06	660.24	652.34	661.87
20-Jul-04 15:30:00	674.72	5844.05	4733.37	4706.43	3550.53	3.16	5.14	4.63	4.61	665.84	661.33	659.33	660.15	652.25	661.84
20-Jul-04 15:45:00	672.92	5827.99	4727.97	4695.68	3548.14	3.26	5.36	4.62	4.75	664.87	661.17	657.63	660.06	652.17	661.82
20-Jul-04 16:00:00	673.24	5836.08	4722.65	4709.16	3549.88	3.13	5.18	4.60	4.50	663.90	661.00	657.32	659.98	652.09	661.77
20-Jul-04 16:15:00	674.10	5836.08	4717.40	4694.12	3549.63	2.91	5.14	4.58	4.72	663.64	660.83	656.32	659.89	652.00	661.69
20-Jul-04 16:30:00	674.44	5828.06	4712.14	4703.94	3548.25	3.16	5.27	4.57	4.57	663.56	660.67	656.01	659.80	651.92	661.61
20-Jul-04 16:45:00	672.97	5836.04	4706.89	4687.73	3548.60	3.13	5.21	4.55	4.60	663.47	660.45	655.41	659.71	651.84	661.53

Ahtr Out 1A1 Deg. F 1t2122	Ahtr Out 1A2 Deg. F 1t2123	Ahtr Out 1A3 Deg. F 1t2124	Ahtr Out 1A4 Deg. F 1t2125	Ahtr Out 1A5 Deg. F 1t2126	Ahtr Out 1A6 Deg. F 1t2127	Ahtr Out 1B1 Deg. F 1t2134	Ahtr Out 1B2 Deg. F 1t2135	Ahtr Out 1B3 Deg. F 1t2136	Ahtr Out 1B4 Deg. F 1t2137	Ahtr Out 1B5 Deg. F 1t2138	Ahtr Out 1B6 Deg. F 1t2139	FGD Inlet A Temp Deg. F 1ai3468	FGD Inlet B Temp Deg. F 1ai3469	Nox lb/mbtu 1a0500	SO2 A ppm 0a1457	SO2 B ppm 0a1458
281.96	296.07	301.93	273.96	286.87	313.89	304.07	294.79	268.65	312.86	296.88	280.85	305.07	302.77	0.05	2166.96	2036.91
282.05	296.15	302.07	274.36	286.97	314.10	303.99	294.86	268.42	313.27	296.69	280.69	305.25	303.00	0.05	2211.62	1987.38
283.03	296.41	302.67	275.76	288.08	314.95	303.91	294.92	268.31	313.54	296.54	280.55	305.43	303.23	0.10	2094.23	2034.14
283.82	296.77	302.89	275.20	287.72	315.66	304.21	295.23	269.32	314.04	297.13	281.13	305.61	303.46	0.11	2195.93	1867.09
282.36	297.14	302.24	275.63	286.60	315.28	304.81	295.81	270.44	314.62	298.00	281.99	305.79	303.69	0.11	2201.22	2020.97
283.05	297.46	304.26	275.58	286.97	315.89	305.06	296.07	268.84	314.23	297.11	281.48	305.97	303.91	0.11	2220.01	2043.15
283.63	296.70	304.08	275.27	287.34	315.53	304.32	295.12	266.34	312.80	294.94	279.46	306.15	304.04	0.14	2079.01	2042.34
283.82	296.57	303.70	276.28	287.80	316.14	303.51	294.24	265.98	313.69	294.68	279.03	306.33	304.03	0.14	2250.96	1923.82
284.95	298.32	304.63	276.73	288.04	316.62	303.24	295.19	266.52	313.26	293.58	279.30	306.48	304.03	0.14	2241.00	2058.47
284.55	298.60	304.79	275.84	286.93	315.77	305.12	296.04	266.54	312.42	292.29	279.57	306.50	304.02	0.12	2239.34	2043.89
284.06	298.13	304.19	274.96	285.72	314.92	305.62	295.27	264.61	313.11	292.70	277.95	306.50	304.02	0.05	2125.03	2046.04
283.56	297.65	303.59	274.08	284.51	314.07	305.68	294.93	265.45	313.59	293.56	277.96	306.51	304.01	0.05	2233.78	1939.92
283.14	297.18	303.04	273.63	283.80	313.56	305.74	295.31	266.11	313.99	294.12	278.72	306.51	304.01	0.05	2245.23	2083.11
283.27	296.97	303.29	274.18	284.35	314.02	305.79	295.69	266.40	314.22	294.47	279.25	306.52	304.00	0.05	2269.05	2094.66
283.51	297.24	303.82	274.78	284.95	314.52	305.78	296.02	266.40	313.94	294.51	279.49	306.52	304.00	0.05	2117.71	2075.74
283.75	297.52	304.34	275.33	285.51	314.75	305.77	296.10	266.32	313.64	294.40	279.51	306.53	303.99	0.05	2260.66	1950.86
284.16	297.80	304.87	275.82	285.99	314.90	305.76	296.15	266.24	313.36	294.30	279.54	306.53	303.99	0.05	2312.75	2097.52
284.77	298.08	305.40	276.28	286.35	315.27	305.75	296.20	266.37	313.53	294.21	279.53	306.53	303.99	0.05	2317.72	2111.81
285.37	298.35	305.37	276.70	286.33	315.79	305.74	296.25	266.72	313.90	294.15	279.38	306.51	303.98	0.05	2142.20	2115.13
285.24	298.57	304.47	274.28	284.86	315.33	305.73	296.30	266.93	314.11	294.09	279.21	306.43	303.98	0.05	2304.18	1946.19
283.20	298.52	303.10	274.80	283.99	313.93	305.72	296.35	266.81	313.95	294.03	279.04	306.35	303.97	0.05	2288.67	2098.26
283.67	298.44	304.46	275.02	284.91	314.40	305.70	296.37	266.68	313.77	293.97	278.87	306.28	303.97	0.05	2294.95	2101.51
284.46	298.36	305.15	275.94	285.73	314.93	305.43	295.98	266.45	313.60	293.95	278.69	306.20	303.96	0.05	2137.51	2102.68
284.94	298.28	305.15	275.44	286.08	315.23	304.44	295.73	265.03	313.51	294.20	278.54	306.12	303.96	0.05	2299.16	1963.55

Ammonia Feed 1A lb/hr 1f5002	Ammonia Feed 1B lb/hr 1f5502	CEM SO2 ppm 1a0512	CEM Nox 1A ppm 1a5042	CEM Nox 1B ppm 1a5542	CEM CO 1B ppm 1ai3461	FGD MW Flow gpm 1ai1226	ME Wash Water gpm 1aia240
135.20	1699.38	46 66	99.98	27.67	76.54	246.67	620.34
1942.79	1718.08	45.24	15.11	24.71	96.91	246.61	625.48
1753.68	1689.29	45 60	13.18	27.93	120.20	246.54	624.76
1685.08	1723.83	39.87	26.31	27.87	110.63	246.48	626.43
1687.80	1738.67	45 26	25.78	26.31	118.62	246.41	624.08
1723.50	1747.46	45.18	29.41	28.85	91.07	246.35	622.32
1724.04	1771.18	46.67	29.46	27.03	84.75	246.28	617.29
1751.85	1728.61	39.45	26.95	25.53	79.84	246.22	613.30
1724.37	1694.65	45.51	26.48	27.85	86.16	246.15	618.01
1723.73	1707.68	46.10	27.55	27.29	104.67	246.09	618.80
1738.67	1714.21	48.01	27.40	27.45	113.36	246.02	618.35
1717.30	1676.43	39.90	26.70	24.38	98.18	245.80	619.82
1708.57	1649.52	46.35	26.48	26.66	79.74	242.73	614.51
1721.86	1666.74	46.41	26.26	26.35	103.82	238.61	613.89
1705.59	1670.20	46.35	27.59	28.96	79.49	239.79	610.47
1723.39	1693.77	38.67	27.89	27.21	74.12	266.21	614.63
1740.33	1734.11	48.28	27.30	27.61	79.75	258.75	611.19
1730.81	1749.42	49.65	26.74	28.10	88.81	256.33	632.71
1734.91	1759.14	50.67	27.65	25.93	90.11	253.92	659.68
1716.42	1719.84	40.02	26.21	24.23	94.27	251.50	665.42
1719.42	1704.48	48.83	27.64	26.89	80.98	249.09	661.03
1730.08	1724.47	49.36	26.36	27.62	103.10	246.68	657.79
1739.35	1755.78	48.24	27.82	28.33	94.60	244.26	661.26
1753.76	1753.94	38.40	29.20	27.67	73.69	241.85	657.36

7/21/04 8:00	Gross MW 1e0388	Coal Flow Tons/Day pe1003	Feed Water Klb/hr 1f0194	Steam Flow klb/hr 1f0126	Steam Pressure psig 1p0125	Oxygen 1A1 % 1a2078	Oxygen 1A2 % 1a2079	Oxygen 1B1 % 1a2080	Oxygen 1B2 % 1a2081	SCR In Temp 1A Deg. F 1t5044	SCR In Temp 1B Deg. F 1t5544	SCR Out Temp 1A Deg. F 1t5048	SCR Out Temp 1B Deg. F 1t5548
21-Jul-04 08:00:00	674.08	5836.00	4671.58	4643.06	3548.99	3.31	5.04	4.78	5.49	665.44	660.39	660.61	659.17
21-Jul-04 08:15:00	673.76	5820.02	4681.02	4630.40	3549.26	3.53	4.98	4.77	5.60	665.41	660.25	659.98	659.09
21-Jul-04 08:30:00	672.28	5807.98	4703.21	4629.96	3551.09	3.35	5.16	4.76	5.81	665.50	660.12	660.39	659.01
21-Jul-04 08:45:00	672.57	5804.05	4724.58	4642.57	3548.66	3.11	5.10	4.75	5.86	665.60	660.01	660.30	658.93
21-Jul-04 09:00:00	673.63	5824.06	4728.15	4653.99	3551.70	3.07	5.13	4.75	5.56	665.70	660.03	660.15	658.93
21-Jul-04 09:15:00	673.19	5820.02	4724.52	4651.67	3550.48	3.22	5.07	4.74	5.58	665.80	660.07	660.53	658.99
21-Jul-04 09:30:00	671.61	5816.07	4711.00	4654.34	3548.72	3.16	5.08	4.73	5.58	665.90	660.11	660.99	659.05
21-Jul-04 09:45:00	672.86	5836.00	4709.41	4681.69	3551.91	2.92	5.06	4.72	5.40	666.00	660.15	660.68	659.11
21-Jul-04 10:00:00	671.32	5828.03	4736.09	4695.69	3549.81	3.02	5.16	4.72	5.45	666.10	660.18	660.88	659.17
21-Jul-04 10:15:00	673.05	5828.06	4769.43	4696.28	3549.70	2.85	5.22	4.71	5.62	666.19	660.22	661.09	659.23
21-Jul-04 10:30:00	671.89	5828.06	4736.18	4704.70	3551.23	2.97	5.11	4.70	5.57	666.26	660.21	661.02	659.25
21-Jul-04 10:45:00	673.51	5832.09	4741.25	4721.27	3550.77	2.90	5.12	4.69	5.42	665.94	660.16	660.23	659.21
21-Jul-04 11:00:00	672.45	5848.04	4751.51	4727.84	3549.77	2.96	5.12	4.69	5.44	665.49	660.12	660.02	659.18
21-Jul-04 11:15:00	672.77	5848.04	4761.26	4720.97	3548.36	2.88	4.92	4.68	5.61	665.04	660.07	659.82	659.14
21-Jul-04 11:30:00	672.69	5840.06	4766.00	4711.72	3548.63	2.70	4.94	4.67	5.77	664.59	660.02	659.12	659.10
21-Jul-04 11:45:00	673.06	5864.06	4762.13	4726.60	3550.35	2.65	4.98	4.66	5.60	664.13	659.98	658.39	659.07
21-Jul-04 12:00:00	672.90	5832.09	4758.12	4723.83	3550.90	2.94	4.73	4.66	5.65	663.78	659.93	658.20	659.03
21-Jul-04 12:15:00	672.19	5832.02	4754.10	4725.03	3549.65	2.88	4.67	4.65	5.53	664.15	659.88	658.44	659.00
21-Jul-04 12:30:00	674.18	5863.99	4750.40	4724.15	3550.59	2.99	4.60	4.64	5.41	664.68	659.87	658.67	658.96
21-Jul-04 12:45:00	672.68	5819.98	4751.58	4721.23	3551.44	2.71	4.88	4.63	5.49	665.20	660.03	658.80	658.94
21-Jul-04 13:00:00	672.34	5832.05	4754.41	4724.97	3574.66	2.27	4.89	4.62	5.69	665.73	660.21	658.90	658.91
21-Jul-04 13:15:00	673.53	5820.02	4757.24	4723.90	3573.94	2.27	4.94	4.62	5.65	666.26	660.39	659.68	658.88
21-Jul-04 13:30:00	673.85	5836.08	4759.82	4733.30	3576.10	2.21	4.97	4.61	5.61	666.78	660.57	660.13	658.86
21-Jul-04 13:45:00	673.74	5839.99	4751.46	4714.11	3573.27	2.42	5.03	4.60	5.80	667.31	660.69	660.55	658.83
21-Jul-04 14:00:00	672.52	5839.99	4737.14	4701.06	3573.03	2.62	4.97	4.59	5.76	667.82	660.57	661.20	658.80
21-Jul-04 14:15:00	672.27	5800.04	4725.05	4681.44	3572.42	2.89	5.06	4.58	5.41	667.64	660.42	660.75	658.78
21-Jul-04 14:30:00	667.11	5768.07	4724.55	4653.70	3576.16	3.10	5.18	4.57	5.63	667.05	660.28	660.34	658.75
21-Jul-04 14:45:00	666.79	5768.07	4712.30	4663.43	3576.69	2.87	5.01	4.57	5.85	666.50	660.14	660.21	658.76
21-Jul-04 15:00:00	668.02	5788.01	4709.82	4665.82	3574.85	2.98	5.17	4.56	5.59	666.31	659.99	660.08	658.78
21-Jul-04 15:15:00	669.23	5792.03	4707.34	4676.50	3574.76	2.55	5.45	4.55	5.51	666.24	659.86	659.95	658.80
21-Jul-04 15:30:00	666.23	5780.02	4704.86	4659.54	3574.69	2.57	5.42	4.54	5.75	666.16	660.10	659.36	658.82
21-Jul-04 15:45:00	669.06	5812.08	4706.99	4653.05	3574.83	2.63	5.44	4.53	5.63	665.51	660.41	658.33	658.92
21-Jul-04 16:00:00	667.68	5768.08	4716.33	4681.39	3575.26	2.28	5.42	4.53	5.75	665.27	660.65	658.26	659.13
21-Jul-04 16:15:00	667.01	5772.06	4725.76	4688.20	3573.19	2.48	5.26	4.52	5.93	666.06	660.90	658.56	659.34
21-Jul-04 16:30:00	665.84	5784.02	4735.18	4681.94	3575.74	2.64	5.49	4.51	5.78	666.70	661.14	657.20	659.55
21-Jul-04 16:45:00	669.07	5776.04	4743.30	4682.53	3574.80	2.74	5.27	4.50	5.80	666.94	661.39	658.17	659.75
21-Jul-04 17:00:00	669.14	5788.01	4740.72	4679.74	3573.81	2.68	5.29	4.49	5.72	667.15	661.63	659.00	659.33
21-Jul-04 17:15:00	667.79	5792.00	4739.09	4669.41	3575.42	2.61	5.29	4.49	5.68	667.35	661.87	659.45	659.01
21-Jul-04 17:30:00	666.80	5772.06	4752.12	4664.62	3574.85	2.76	5.39	4.48	5.62	667.46	662.05	660.15	659.00
21-Jul-04 17:45:00	668.50	5768.07	4765.16	4671.44	3575.13	2.43	5.26	4.47	5.68	667.55	661.77	661.07	658.86
21-Jul-04 18:00:00	667.89	5784.02	4759.42	4685.48	3575.71	2.58	5.13	4.46	5.90	667.64	661.38	661.22	655.38
21-Jul-04 18:15:00	667.32	5784.02	4748.54	4684.10	3575.16	2.51	5.16	4.45	5.83	667.73	660.99	661.19	657.02
21-Jul-04 18:30:00	667.75	5776.04	4737.65	4694.43	3572.23	2.45	5.35	4.45	5.81	667.82	660.69	661.22	658.35
21-Jul-04 18:45:00	669.42	5776.04	4726.77	4691.49	3574.86	2.71	5.29	4.44	5.74	667.88	660.81	661.24	658.65

Ahtr In Temp 1A Deg. F 1t0260	Ahtr In Temp 1B Deg. F 1t0288	Ahtr Out 1A1 Deg. F 1t2122	Ahtr Out 1A2 Deg. F 1t2123	Ahtr Out 1A3 Deg. F 1t2124	Ahtr Out 1A4 Deg. F 1t2125	Ahtr Out 1A5 Deg. F 1t2126	Ahtr Out 1A6 Deg. F 1t2127	Ahtr Out 1B1 Deg. F 1t2134	Ahtr Out 1B2 Deg. F 1t2135	Ahtr Out 1B3 Deg. F 1t2136	Ahtr Out 1B4 Deg. F 1t2137	Ahtr Out 1B5 Deg. F 1t2138	Ahtr Out 1B6 Deg. F 1t2139	FGD Inlet A Temp Deg. F 1ai3468	FGD Inlet B Temp Deg. F 1ai3469
653.48	661.02	280.54	296.62	300.60	274.14	286.00	314.57	302.72	294.20	267.63	313.29	296.34	279.93	303.72	300.76
653.55	661.01	281.53	296.59	302.61	274.81	287.21	315.19	302.79	294.36	267.92	313.52	296.60	280.12	303.77	300.84
653.62	661.00	283.21	296.53	303.76	275.74	288.21	315.98	302.86	293.92	268.05	313.49	297.22	280.09	303.81	300.91
653.68	660.98	283.27	296.48	303.54	275.00	288.28	316.67	301.89	293.35	266.60	312.98	296.52	280.02	303.85	300.99
653.75	660.97	282.65	296.43	303.27	274.18	287.99	315.93	300.56	293.26	266.81	312.39	295.08	279.95	303.90	301.06
653.82	660.96	282 13	296.69	302.80	274.04	287.15	314.75	302.19	293.44	267.50	312.06	294.12	279.76	303.94	301.15
653.88	660.95	282.20	297.15	302.44	274.39	287.11	314.93	303.74	293.68	266.83	313.87	295.41	279.38	303.98	301.39
653.95	660.93	283.03	297.60	303.14	274.74	287.94	315.72	304.14	294.14	267.52	314.27	296.89	279.87	304.02	301.69
654.02	660.92	283.82	298.04	303.98	275.79	288.70	316.53	304.29	294.63	268.42	314.28	296.95	280.35	304.07	301.98
654.08	660.91	284.21	298.17	304.29	276.84	288.84	317.37	304.43	295.05	267.90	313.97	296.68	280.18	304.11	302.28
654.15	660.89	284.44	298.18	304.46	276.35	288.76	317.03	304.58	295.30	267.31	313.63	296.30	279.83	304.15	302.57
654.22	660.88	284.24	298.20	304.40	275.82	288.37	316.19	304.72	295.54	266.96	313.57	295.90	279.54	304.19	302.86
654.29	660.87	284.02	298.22	304.24	275.61	287.94	315.67	304.86	295.76	267.03	314.07	295.41	279.49	304.24	303.16
654.35	660.86	283.83	298.24	304.09	275.48	287.51	315.25	305.00	295.84	267.00	314.29	295.04	279.43	304.28	303.44
654.42	660.84	283.63	298.26	303.91	275.42	287.08	314.83	305.15	295.91	266.87	314.27	294.82	279.25	304.32	303.64
654.49	660.83	283 43	298.27	302.84	273.74	285.51	314.53	305.29	295.98	266.71	314.24	294.60	279.06	304.37	303.83
654.55	660.82	283.03	298.16	302.66	275.43	284.54	315.04	305.43	296.05	266.33	314.07	294.39	278.88	304.59	304.01
654.62	660.80	284.15	297.74	304.98	275.86	285.17	315.62	305.57	296.12	265.93	313.72	294.20	278.69	304.90	304.19
654.69	660.79	285.33	297.47	305.43	275.57	285.81	315.75	305.71	296.19	265.51	313.36	294.04	278.51	305.22	304.37
654.75	660.78	285.38	298.04	305.34	275.54	286.45	315.76	304.64	295.71	265.14	312.99	294.19	278.33	305.53	304.55
654.82	660.77	285.59	298.72	305.67	276.24	287.08	316.30	303.20	295.51	265.08	312.77	292.67	278.32	305.84	304.74
654.89	660.75	285.88	299.40	306.16	276.94	287.72	316.85	305.84	296.15	266.29	312.76	292.26	279.12	306.15	304.92
654.95	660.74	286 18	300.00	306.63	277.14	288.20	317.23	306.52	296.02	264.62	313.12	292.44	277.53	306.46	305.10
655.02	660.73	286.44	299.82	306.65	276.97	288.24	317.12	306.57	295.61	264.98	313.56	293.22	277.45	306.78	305.28
655.02	660.71	286.26	299.42	306.52	276.81	288.27	316.98	306.61	296.04	266.06	314.00	294.00	278.18	307.09	305.46
655.01	660.70	285.92	299.02	306.38	276.65	288.29	316.81	306.65	296.49	266.33	314.44	294.70	278.91	307.40	305.65
655.00	660.69	285.59	298.62	306.02	276.49	288.29	316.57	306.60	296.94	266.56	314.79	295.02	279.61	307.71	305.70
654.99	660.68	285.26	298.22	305.56	275.64	288.21	316.26	306.49	297.11	266.40	313.98	294.66	279.35	308.02	305.65
654.98	660.66	284.85	297.92	304.97	274.83	287.57	314.89	306.05	296.59	266.00	312.89	293.97	278.69	308.15	305.60
654.97	660.65	284.40	298.00	304.35	275.06	286.92	314.94	305.63	296.13	265.79	313.13	293.69	278.32	308.18	305.55
654.96	660.64	284.06	298.10	304.05	274.58	286.54	314.88	305.38	295.90	265.70	313.32	293.75	278.21	308.22	305.50
654.94	660.63	283.62	298.21	303.30	272.71	285.47	313.79	305.14	295.68	265.62	313.11	293.80	278.11	308.26	305.45
654.93	660.74	282.37	298.30	302.27	273.54	285.56	313.92	304.90	295.46	265.54	312.84	293.85	278.00	308.30	305.40
654.92	660.92	283 30	298.13	304.53	274.29	286.00	315.16	304.66	295.24	265.46	312.56	293.91	277.89	308.34	305.35
654.91	661.10	284.50	297.87	305.07	274.97	286.29	315.49	304.42	295.02	265.19	312.29	293.96	277.79	308.38	305.30
654.90	661.29	284.52	297.61	304.77	274.13	286.68	315.10	303.63	294.49	264.57	312.16	293.11	278.08	308.42	305.25
654.89	661.47	284.30	297.50	304.47	274.26	287.08	314.88	303.16	295.23	265.05	312.86	292.42	278.74	308.46	305.20
654.87	661.65	284 39	297.76	304.50	274.96	287.49	315.54	305.67	296.60	266.24	312.66	292.53	278.97	308.50	305.16
654.86	661.84	285.08	298.03	305.04	275.65	287.90	316.32	306.84	296.11	265.36	314.04	293.43	278.33	308.54	305.11
654.85	662.02	285.76	298.30	305.59	276.17	287.95	316.62	306.90	296.44	266.67	314.59	295.03	279.43	308.58	305.06
654.83	662.20	285.79	298.57	306.13	276.37	287.72	316.58	306.47	296.94	266.19	313.86	294.54	279.14	308.61	304.97
654.81	662.39	285.53	298.82	306.17	275.99	287.48	316.41	306.03	296.45	265.58	312.86	293.65	278.44	308.56	304.87
654.79	662.57	285.28	298.81	305.74	275.56	287.28	316.09	305.78	296.11	265.37	312.96	293.30	278.07	308.45	304.76
654.77	662.75	285.02	298.73	305.31	275.05	287.09	315.77	305.73	296.02	265.31	313.04	293.23	277.89	308.34	304.66

Nox lb/mbtu 1a0500	SO2 A ppm 0a1457	SO2 B ppm 0a1458	Ammonia Feed 1A lb/hr 1f5002	Ammonia Feed 1B lb/hr 1f5502	CEM SO2 ppm 1a0512	CEM Nox 1A ppm 1a5042	CEM Nox 1B ppm 1a5542	CEM CO 1B ppm 1ai3461	FGD MW Flow gpm 1ai1226	ME Wash Water gpm 1aia240
0.05	2084.76	1877.87	1730.23	1609.95	27.65	26.82	27.30	223.11	246.75	676.94
0.05	2129.36	1893.16	1730.09	1612.13	31.39	27.76	26.86	215.11	246.72	673.71
0.05	2000.63	1886.47	1738.08	1611.46	37.11	26.96	25.97	160.07	246.68	656.64
0.05	2175.88	1754.39	1740.54	1615.61	34.28	27.75	26.68	150.76	246.66	671.25
0.05	2216.41	1889.36	1742.27	1651.38	40.19	27.72	28.19	220.92	246.63	677.10
0.05	2224.30	1923.84	1741.55	1669.68	41.57	27.43	27.34	218.19	246.60	675.44
0.05	2043.10	1947.96	1739.69	1675.48	41.34	27.12	26.31	169.95	246.58	682.70
0.05	2212.77	1826.96	1729.45	1663.69	32.98	24.68	26.31	177.85	246.55	674.05
0.05	2215.35	1948.01	1717.77	1667.62	41.81	27.42	26.99	169.50	246.53	672.61
0.05	2251.42	1937.92	1707.22	1705.49	45.76	27.72	27.54	146.70	246.50	668.17
0.05	2090.60	1952.39	1712.95	1720.36	45.76	27.91	26.55	134.39	246.48	672.22
0.05	2231.34	1840.55	1730.76	1679.69	38.64	26.99	24.41	124.05	246.45	667.86
0.05	2219.51	1981.67	1709.00	1620.82	45.27	27.18	26.16	102.33	246.42	672.34
0.05	2232.27	1992.35	1677.38	1609.78	44.89	24.53	26.09	102.51	246.40	675.76
0.05	2090.97	1991.91	1645.59	1573.93	43.07	23.19	26.73	154.71	246.37	671.29
0.05	2231.79	1836.68	1611.96	1569.06	36.79	23.98	26.24	218.46	246.35	664.33
0.05	2244.59	1975.07	1577.84	1528.88	43.75	24.12	26.43	203.76	246.32	662.97
0.05	2209.44	1999.72	1543.12	1503.12	43.30	25.59	26.64	247.86	246.30	666.15
0.05	2070.07	1991.43	1506.21	1505.80	42.35	26.44	26.19	431.93	246.27	661.98
0.05	2209.23	1825.51	1477.92	1440.44	35.93	25.85	25.30	299.50	246.24	665.64
0.05	2268.70	1909.39	1518.04	1466.39	44.12	28.62	26.77	215.00	246.22	666.58
0.05	2239.14	1908.64	1536.97	1458.16	42.89	27.85	25.79	203.03	246.19	663.79
0.05	2088.17	1929.77	1553.70	1440.89	40.48	27.94	28.65	153.58	246.17	653.45
0.05	2236.88	1759.34	1593.41	1471.80	33.76	28.96	29.28	139.83	246.14	654.58
0.05	2210.92	1912.90	1641.74	1535.72	42.06	31.35	29.91	209.82	246.12	657.47
0.05	2192.56	1923.39	1705.75	1649.82	40.15	35.77	30.84	166.93	246.09	656.99
0.05	2024.21	1885.09	1788.51	1715.06	42.25	29.32	27.77	168.38	246.06	658.47
0.05	2171.63	1760.57	1767.88	1660.02	34.31	24.66	24.82	189.08	246.04	654.89
0.05	2206.16	1880.19	1744.08	1659.56	41.26	26.84	27.91	193.96	246.01	652.58
0.05	2213.91	1882.39	1720.90	1638.15	41.91	25.86	25.12	89.27	245.99	651.83
0.05	2051.95	1900.04	1692.89	1585.34	41.57	22.38	22.56	66.66	245.96	652.51
0.06	2158.95	1786.37	1643.92	1497.84	34.25	22.61	23.08	71.77	245.93	652.12
0.06	2159.96	1897.28	1568.28	1439.31	40.32	22.47	24.98	58.89	245.91	653.08
0.06	2159.99	1909.50	1515.34	1376.11	37.85	24.55	24.61	65.16	245.88	653.28
0.05	1990.83	1908.67	1535.75	1354.39	39.08	27.33	27.85	59.31	245.86	652.98
0.05	2168.49	1764.83	1574.91	1378.31	32.77	31.01	31.41	56.16	245.98	649.75
0.05	2183.58	1903.77	1633.01	1489.25	39.57	37.61	33.78	55.93	246.16	652.39
0.05	2200.81	1891.08	1702.39	1638.90	40.50	41.65	33.56	70.64	246.34	647.86
0.05	2028.15	1906.34	1827.46	1760.57	41.82	40.28	31.42	67.84	246.53	645.11
0.05	2224.95	1775.41	1947.42	1797.00	32.99	25.89	21.88	73.87	246.71	650.35
0.05	2248.29	1885.34	1827.87	1639.36	41.10	28.07	26.96	101.67	246.90	647.55
0.05	2247.44	1931.41	1792.06	1618.38	41.96	24.72	26.17	126.13	247.08	647.32
0.05	2071.49	1948.68	1679.83	1468.65	41.67	30.53	37.97	75.32	247.26	650.10
0.06	2189.41	1807.71	1598.25	1113.91	32.95	35.47	71.82	86.58	247.45	646.84

7/22/04 8:00	Gross MW 1e0388	Coal Flow Tons/Day pe1003	Feed Water Klb/hr 1f0194	Steam Flow klb/hr 1f0126	Steam Pressure psig 1p0125	Oxygen 1A1 % 1a2078	Oxygen 1A2 % 1a2079	Oxygen 1B1 % 1a2080	Oxygen 1B2 % 1a2081	SCR In Temp 1A Deg. F 1t5044	SCR In Temp 1B Deg. F 1t5544	SCR Out Temp 1A Deg. F 1t5048
22-Jul-04 08:00:00	624.128052	5384.00	4344.14	4277.87	3500.76	3.39	5.96	4.66	6.52	655.96	647.65	647.93
22-Jul-04 08:15:00	623.301819	5383.96	4312.99	4278.22	3498.82	3.29	5.86	4.68	6.48	655.62	647.44	648.23
22-Jul-04 08:30:00	623.83905	5383.96	4294.64	4281.50	3501.04	3.15	5.76	4.69	6.40	655.28	647.23	648.64
22-Jul-04 08:45:00	624.036804	5384.00	4316.44	4272.48	3501.52	3.61	6.03	4.71	6.09	654.95	647.04	649.01
22-Jul-04 09:00:00	630.910217	5460.05	4381.71	4333.93	3501.66	3.12	5.73	4.73	6.00	654.64	646.99	648.67
22-Jul-04 09:15:00	633.721985	5488.04	4423.75	4366.36	3502.19	3.07	5.63	4.75	6.01	654.34	646.96	648.33
22-Jul-04 09:30:00	632.649841	5467.92	4434.50	4361.94	3499.75	3.36	5.76	4.76	5.90	654.04	646.93	648.00
22-Jul-04 09:45:00	629.296326	5451.97	4442.19	4342.97	3496.91	3.67	5.80	4.78	4.97	652.86	647.54	647.54
22-Jul-04 10:00:00	630.534241	5451.97	4542.68	4400.82	3502.26	3.74	5.72	4.80	4.73	647.26	650.30	643.65
22-Jul-04 10:15:00	632.534851	5459.98	4577.86	4432.00	3500.84	3.75	5.71	4.82	4.61	644.63	651.79	640.48
22-Jul-04 10:30:00	635.135193	5491.99	4579.71	4434.81	3499.65	3.65	5.63	4.83	4.74	642.89	652.89	638.71
22-Jul-04 10:45:00	634.774719	5500.04	4573.29	4434.26	3499.78	3.51	5.78	4.85	4.83	642.63	653.98	637.68
22-Jul-04 11:00:00	632.101196	5483.98	4581.28	4431.81	3500.28	3.60	5.70	4.87	5.03	642.43	655.02	637.05
22-Jul-04 11:15:00	634.391602	5479.95	4591.18	4437.16	3499.78	3.58	5.77	4.89	4.93	642.24	655.68	636.41
22-Jul-04 11:30:00	632.885193	5471.91	4601.62	4435.02	3500.56	3.56	5.79	4.88	4.90	642.04	656.25	635.80
22-Jul-04 11:45:00	633.633545	5492.02	4612.12	4429.08	3501.14	3.41	5.88	4.87	4.67	641.85	656.82	635.80
22-Jul-04 12:00:00	632.821777	5463.97	4622.63	4427.72	3500.07	3.54	5.84	4.85	4.63	641.65	657.09	635.50
22-Jul-04 12:15:00	633.838379	5467.92	4624.01	4440.53	3499.46	3.28	5.85	4.84	4.68	641.45	656.96	634.03
22-Jul-04 12:30:00	633.510559	5487.93	4613.31	4421.22	3499.48	3.47	5.91	4.82	4.76	641.26	656.81	630.36
22-Jul-04 12:45:00	634.484436	5467.96	4602.87	4414.34	3500.84	3.29	5.85	4.81	4.64	641.11	656.67	629.34
22-Jul-04 13:00:00	634.950012	5492.02	4599.79	4416.48	3500.06	3.31	5.79	4.80	4.77	641.39	656.53	629.75
22-Jul-04 13:15:00	633.446472	5479.92	4586.68	4421.64	3499.90	3.47	5.93	4.78	4.76	641.78	656.39	630.18
22-Jul-04 13:30:00	634.296204	5479.92	4571.88	4425.62	3498.64	3.36	5.85	4.77	4.69	642.17	656.32	630.34
22-Jul-04 13:45:00	634.39502	5479.95	4578.15	4413.73	3499.04	3.32	5.85	4.75	4.71	642.56	656.48	632.31

SCR Out Temp 1B Deg. F 1t5548	Ahtr In Temp 1A Deg. F 1t0260	Ahtr In Temp 1B Deg. F 1t0288	Ahtr Out 1A1 Deg. F 1t2122	Ahtr Out 1A2 Deg. F 1t2123	Ahtr Out 1A3 Deg. F 1t2124	Ahtr Out 1A4 Deg. F 1t2125	Ahtr Out 1A5 Deg. F 1t2126	Ahtr Out 1A6 Deg. F 1t2127	Ahtr Out 1B1 Deg. F 1t2134	Ahtr Out 1B2 Deg. F 1t2135	Ahtr Out 1B3 Deg. F 1t2136	Ahtr Out 1B4 Deg. F 1t2137	Ahtr Out 1B5 Deg. F 1t2138
643.15	642.19	648.26	280.76	294.81	299.26	274.06	284.85	312.71	296.69	288.61	264.35	305.63	292.02
642.66	641.52	647.65	281.73	296.21	302.20	274.95	286.89	313.70	296.99	289.02	265.18	306.27	292.77
643.23	640.87	647.05	282.61	296.25	302.57	275.12	287.19	313.91	297.29	289.43	265.75	306.91	293.51
644.27	640.28	646.45	282.73	295.92	302.34	275.10	287.12	313.94	297.24	289.74	265.62	307.55	293.64
645.31	639.70	645.90	282.78	296.06	302.11	275.09	287.06	313.96	296.43	289.91	265.57	307.31	292.57
645.90	639.12	646.07	282.83	296.36	301.90	275.15	287.02	314.00	297.23	289.87	265.23	306.12	290.44
645.80	638.54	646.46	283.03	296.67	302.26	275.43	287.37	314.16	298.12	289.27	263.55	307.36	291.23
646.18	637.96	646.85	284.02	297.21	303.12	276.67	288.25	315.22	299.27	290.10	265.94	309.65	293.42
647.54	636.41	647.24	286.52	299.34	305.30	277.71	289.74	316.82	304.23	294.80	269.07	313.66	297.01
648.25	633.71	647.63	285.74	299.50	304.92	277.04	287.40	314.86	305.52	296.12	268.83	314.42	296.36
649.94	631.01	648.02	285.12	299.25	304.42	276.67	286.38	314.47	306.17	296.75	268.37	315.18	295.67
651.57	629.36	648.42	285.02	299.00	304.39	276.35	286.00	314.35	306.81	297.39	268.18	315.58	295.40
652.34	629.32	648.81	284.92	298.75	304.36	276.03	285.62	314.23	307.46	298.03	268.31	315.65	295.48
652.91	629.30	649.20	284.83	298.53	304.33	275.71	285.23	314.11	307.96	298.50	268.44	315.72	295.55
653.49	629.28	649.59	284.74	298.37	304.31	275.39	284.85	313.99	308.23	298.71	268.57	315.79	295.63
654.06	629.25	649.98	284.22	298.22	303.24	273.44	283.45	313.44	308.49	298.91	268.71	315.86	295.71
654.39	629.23	650.37	282.53	297.97	301.96	274.55	283.16	312.70	308.68	299.05	268.55	315.76	295.54
654.41	629.21	650.77	283.73	297.14	304.21	275.37	284.20	314.44	307.58	298.03	267.59	315.20	294.67
654.43	629.19	651.16	284.46	296.34	304.34	275.39	285.24	314.90	306.00	296.60	265.91	314.18	293.86
654.45	629.16	651.55	284.27	296.41	303.81	275.69	286.18	314.85	304.17	295.18	264.25	313.14	292.76
654.46	629.14	651.94	284.08	296.65	303.44	276.00	286.69	314.86	302.90	295.05	264.45	313.03	292.30
654.48	629.12	652.33	283.95	296.88	303.61	276.30	287.16	314.98	305.19	295.85	265.81	313.46	293.35
654.50	629.10	652.72	284.37	297.12	303.81	276.66	287.62	315.21	306.41	296.65	267.09	314.34	294.39
654.52	629.07	653.11	284.92	297.35	304.02	277.08	288.08	315.65	307.19	297.45	268.28	315.65	295.39

Ahtr Out 1B6 Deg. F 1t2139	FGD Inlet A Temp Deg. F 1ai3468	FGD Inlet B Temp Deg. F 1ai3469	Nox lb/mbtu 1a0500	SO2 A ppm 0a1457	SO2 B ppm 0a1458	Ammonia Feed 1A lb/hr 1f5002	Ammonia Feed 1B lb/hr 1f5502	CEM SO2 ppm 1a0512	CEM Nox 1A ppm 1a5042	CEM Nox 1B ppm 1a5542	CEM CO 1B ppm 1ai3461	FGD MW Flow gpm 1ai1226	ME Wash Water gpm 1aia240
275.68	303.10	295.48	0.05	2022.43	1766.63	1089.36	Error: -106	41.06	87.91	100.36	58.38	253.47	669.30
276.17	303.02	295.76	0.05	2035.02	1775.47	1225.44	664.5465	39.56	99.68	100.35	63.40	253.53	664.58
276.66	302.93	296.05	0.05	1908.98	1779.94	1315.14	1250.663	39.83	75.86	83.28	65.94	253.61	669.09
277.15	302.85	296.33	0.22	2015.54	1690.25	1554.28	1425.276	32.87	43.83	42.77	64.50	254.34	670.46
277.11	302.77	296.62	0.27	2073.21	1800.53	1605.33	1470.759	38.51	32.73	27.26	68.00	255.38	662.39
276.45	302.68	296.97	0.27	2096.28	1802.86	1590.08	1439.891	38.93	27.64	27.60	73.46	256.43	661.27
275.60	302.67	297.42	0.27	1923.20	1835.64	1674.56	1550.395	38.43	42.83	37.95	76.49	257.48	662.96
277.09	302.80	297.88	0.11	1985.51	1821.90	1640.65	1512.573	33.86	20.07	15.11	114.40	258.53	665.19
281.44	302.94	299.20	0.06	1955.69	1998.70	1240.55	508.5644	44.64	51.93	90.75	118.69	259.57	675.13
281.52	303.07	301.15	0.06	1988.00	1999.17	1497.31	1433.349	44.98	35.36	33.49	105.61	260.62	671.53
281.47	303.20	302.96	0.06	1845.99	1999.64	1481.35	1390.026	44.26	30.16	32.45	94.49	261.67	662.89
281.43	303.34	303.41	0.08	1974.19	1847.53	1511.64	1394.973	36.02	28.46	31.23	84.61	262.72	661.30
281.38	303.47	303.55	0.08	1991.23	1970.48	1543.11	1432.748	42.94	29.62	32.45	80.32	263.76	659.98
281.33	303.60	303.68	0.08	2012.37	1978.50	1544.14	1475.624	44.98	28.48	31.73	99.71	264.81	661.32
281.29	303.74	303.82	0.08	1861.21	1966.61	1549.36	1470.946	44.35	27.45	30.03	87.53	265.86	660.29
281.24	303.87	303.95	0.06	1956.31	1857.73	1560.58	1461.938	36.64	26.96	28.87	85.23	266.91	662.91
281.36	304.01	304.09	0.06	1955.14	1993.60	1553.79	1439.11	44.64	26.19	28.45	80.78	267.95	662.29
281.34	304.14	304.22	0.06	1981.77	1996.31	1545.26	1392.171	45.87	26.10	30.07	79.32	269.00	661.86
280.12	304.27	304.21	0.06	1859.39	1966.18	1555.00	1403.552	45.22	27.01	31.53	76.83	270.05	659.40
278.81	304.41	304.10	0.06	1967.29	1832.70	1560.94	1428.982	36.34	27.81	30.72	78.55	271.10	667.21
277.86	304.52	303.99	0.06	1969.68	1962.69	1571.25	1453.452	43.70	27.30	30.59	79.88	272.14	665.27
278.78	304.59	303.88	0.06	1987.36	1985.20	1581.56	1452.971	43.77	27.59	29.82	76.13	273.19	658.00
279.97	304.67	303.77	0.06	1849.96	1991.21	1584.37	1448.897	43.55	26.91	30.18	80.78	282.23	664.88
281.15	304.75	303.66	0.06	1994.85	1828.41	1571.90	1443.844	35.84	26.66	28.84	75.26	306.72	669.11

APPENDIX C

Flue Gas Mercury Data

- Summary of Ontario-Hydro Impinger Analyses Data Sheets
- Recovery Data Sheets

Impinger Components Wts & Volumes	SCR-1	AHO-1	STK-1	SCR-2	AHO-2	STK-2	SCR-3	AHO-3	STK-3	SCR-4	AHO-4	STK-4
Filter Wt., g	6.6021	9.6530	0.3278	3.5050	6.7323	0.3375	5.8554	9.4174	0.3303	7.5775	7.8574	0.3297
ppb Hg	<4	120	<5.0	10	210	<5.0	<4	100	<5.0	<4	120	<5.0
total ug	<0.03	1.16	<5.00E-03	0.04	1.41	<5.00E-03	<0.02	0.94	<5.00E-03	<0.03	0.94	<5.00E-03
ug/dscm	<0.03	0.87	<2.30E-03	0.04	1.20	<2.28E-03	<0.03	0.72	<2.26E-03	<0.03	0.75	<2.29E-03
Probe Rinse volume, ml	88	112	132	127	126	113	64	113	145	75	131	156
Analytical Hg, ng/ml	<1.0	<1.0	2.5	<1.0	1.1	3.0	1.1	<1.0	3.1	<1.0	<1.0	3.0
ug/dscm	<0.09	<0.08	0.15	<0.14	0.12	0.15	0.08	<0.09	0.20	<0.08	<0.10	0.21
Heated Umbilical Line Rinse volume, ml	NA	128	NA	NA	157	NA	NA	136	NA	NA	116	NA
Analytical Hg, ng/ml		1.6			<1.0			3.2			1.7	
ug/dscm		0.15		0.00	<0.13			0.33		0.00	0.16	
KCl volume, ml	520	530	708	519	521	712	527	534	720	554	576	763
Analytical Hg, ng/ml	2.6	27.4	2.2	2.8	20.3	2.7	5.5	19.3	2.0	4.2	15.6	0.7
ug/dscm	1.34	10.94	0.72	1.62	9.00	0.88	3.27	7.89	0.65	2.38	7.11	0.24
Nitric/Peroxide volume, ml	175	174	175	175	176	176	175	175	178	175	175	175
Analytical Hg, ng/ml	0.8	0.5	<0.2	1.0	<0.2	<0.2	1.5	0.3	<0.2	3.7	0.3	<0.2
ug/dscm	0.14	0.07	<0.02	0.20	<0.03	<0.02	0.30	0.04	<0.02	0.66	0.04	<0.02
KMnO4 volume, ml	248	249	245	246	246	245	248	249	247	247	246	244
Analytical Hg, ng/ml	47.9	1.6	1.2	32.2	0.6	2.1	28.2	1.6	1.7	33.6	1.8	2.3
ug/dscm	11.78	0.30	0.14	8.84	0.13	0.24	7.89	0.30	0.19	8.47	0.35	0.26
KMnO4-Acid Rinse volume, ml	100	100	100	100	100	100	100	100	100	100	100	100
Analytical Hg, ng/ml	<1.0	<1.0	<1.0	<1.0	<1.0	<1.0	<1.0	<1.0	<1.0	1.0	<1.0	<1.0
ug/dscm	<0.10	<0.08	<0.05	<0.11	<0.09	<0.05	<0.11	<0.08	<0.05	0.10	<0.08	<0.05
Particulate, ug/dscm	0.03	0.87	2.30E-03	0.04	1.20	2.28E-03	0.03	0.72	2.26E-03	0.03	0.75	2.29E-03
Particulate, mg/sec	0.01	0.80	1.89E-03	0.02	1.14	1.87E-03	0.01	0.67	1.88E-03	0.01	0.65	1.81E-03
Stack based flows, mg/sec	0.02	0.62	1.89E-03	0.03	0.84	1.87E-03	0.02	0.55	1.88E-03	0.02	0.52	1.81E-03
Percent of Total	0.19	6.99	0.22	0.36	11.25	0.17	0.23	7.63	0.20	0.26	8.69	0.29
Oxidized Fraction, ug/dscm	1.43	11.18	0.87	1.76	9.25	1.03	3.35	8.30	0.85	2.45	7.37	0.46
Oxidized Fraction, mg/sec	0.64	10.20	0.71	0.76	8.77	0.85	1.38	7.71	0.71	1.04	6.46	0.36
Stack based flows, mg/sec	1.10	7.98	7.13E-01	1.40	6.49	8.48E-01	2.42	6.34	7.10E-01	1.78	5.09	3.63E-01
Percent of Total	10.60	89.48	81.31	16.11	86.50	77.55	28.69	87.91	77.12	20.92	85.83	58.83
Elemental Fraction, ug/dscm	12.02	0.44	0.20	9.15	0.24	0.30	8.30	0.42	0.25	9.24	0.47	0.32
Elemental Fraction, mg/sec	5.36	0.40	0.16	3.93	0.23	0.24	3.42	0.39	0.21	3.94	0.41	0.25
Stack based flows, mg/sec	9.29	0.31	1.62E-01	7.28	0.17	2.44E-01	6.00	0.32	2.09E-01	6.71	0.33	2.53E-01
Percent of Total	89.21	3.53	18.48	83.54	2.25	22.28	71.08	4.46	22.67	78.81	5.49	40.87
Total ug/m^3	13.48	12.49	1.07	10.95	10.69	1.33	11.68	9.45	1.11	11.72	8.59	0.78
Total mg/sec	6.01	11.39	0.88	4.70	10.14	1.09	4.81	8.77	0.92	4.99	7.53	0.62
Stack based flows, mg/sec	10.41	8.92	8.77E-01	8.71	7.50	1.09E+00	8.45	7.21	9.21E-01	8.52	5.93	6.18E-01

Averages	SCR			AHO			STK		
	Avg	Sd	PRSd	Avg	Sd	PRSd	Avg	Sd	PRSd
Particulate, ug/dscm	**0.03**	**0.006**	**18.8**	**0.89**	**0.27**	**30.5**	**2.28E-03**	**1.467E-05**	**0.6**
Particulate, mg/sec	0.01	0.003	19.2	0.82	0.28	33.7	1.86E-03	3.656E-05	2.0
Particulate, mg/sec (stack flow)	**0.02**	**0.005**	**22.4**	**0.64**	**0.18**	**28.4**	**1.86E-03**	**3.656E-05**	**2.0**
Percent of Total	0.28	0.070	25.0	9.19	1.86	20.3	0.22	0.06	28.3
Oxidized Fraction, ug/dscm	**2.52**	**0.85**	**33.7**	**8.31**	**0.94**	**11.3**	**0.78**	**0.29**	**37.6**
Oxidized Fraction, mg/sec	1.06	0.33	31.2	7.65	1.15	15.1	0.64	0.25	39.0
Oxidized, mg/sec (stack flow)	**1.87**	**0.57**	**30.5**	**5.98**	**0.77**	**12.9**	**0.64**	**0.25**	**39.0**
Percent of Total	21.91	7.67	35.0	86.75	1.06	1.2	71.17	10.68	15.0
Elemental Fraction, ug/dscm	**8.90**	**1.62**	**18.2**	**0.38**	**0.12**	**32.1**	**0.29**	**0.03**	**11.9**
Elemental Fraction, mg/sec	3.76	0.84	22.3	0.34	0.10	29.4	0.23	0.02	9.8
Elemental, mg/sec (stack flow)	**6.66**	**1.41**	**21.2**	**0.27**	**0.09**	**32.9**	**0.23**	**0.02**	**9.8**
Percent of Total	77.81	7.67	9.9	4.07	1.65	40.7	28.61	10.62	37.1
Total ug/m^3	**11.45**	**1.07**	**9.4**	**9.58**	**1.06**	**11.1**	**1.07**	**0.28**	**25.9**
Total mg/sec	4.83	0.60	12.4	8.81	1.30	14.8	0.88	0.24	27.4
Total mg/sec (stack flow)	**8.56**	**0.93**	**10.9**	**6.88**	**0.84**	**12.1**	**0.88**	**0.24**	**27.4**

PLANT 9 Hg SAMPLING PROGRAM - ONTARIO HYDRO SAMPLING TRAIN DATA

Location			SCR Inlet Unit 1	AirHtr Out Unit 1	Stack Unit 1	SCR Inlet Unit 1	AirHtr Out Unit 1	Stack Unit 1	SCR Inlet Unit 1	AirHtr Out Unit 1	Stack Unit 1	SCR Inlet Unit 1	AirHtr Out Unit 1	Stack Unit 1
Date			07/20/04	07/20/04	07/20/04	07/21/04	07/21/04	07/21/04	07/21/04	07/21/04	07/21/04	07/22/04	07/22/04	07/22/04
Start Time			1300	1300	1300	1015	1015	1015	1540	1540	1540	1035	1035	1035
Stop Time			1612	1528	1608	1347	1348	1358	1812	1802	1805	1315	1253	1300
Test Number			SCR-1	AHO-1	STK-1	SCR-2	AHO-2	STK-2	SCR-3	AHO-3	STK-3	SCR-4	AHO-4	STK-4
Sample Type			OH-Hg	OH-Hg	OH-Hg	OH-Hg	OH-Hg	OH-Hg	OH-Hg	OH-Hg	OH-Hg	OH-Hg	OH-Hg	OH-Hg
Y factor of dry gas meter	-		0.984	0.966	1.006	0.984	0.966	1.006	0.984	0.966	1.006	0.984	0.966	1.006
Gas Volume	-	ft^3	40.03	51.83	86.39	35.48	45.45	86.07	35.48	51.60	87.46	38.89	49.32	86.61
Delta H of dry gas meter	-	" H_20	0.38	0.66	1.74	0.32	0.62	1.90	0.32	0.61	1.82	0.33	0.58	1.73
Meter Temperature	-	°F	103.7	84.6	119.5	103.1	80.2	113.9	108.5	90.7	116.0	102.2	82.9	115.3
C Factor of pitot tube	-		0.840	0.846	0.838	0.840	0.846	0.838	0.840	0.846	0.838	0.840	0.846	0.838
Nozzle Diameter	-	inches	0.212	0.183	0.191	0.212	0.183	0.191	0.212	0.183	0.191	0.212	0.183	0.191
A n (area of nozzle)	-	ft^2	0.00025	0.00018	0.00020	0.00025	0.00018	0.00020	0.00025	0.00018	0.00020	0.00025	0.00018	0.00020
Area of Stack (Single of Dual	-	ft^2	799.4	956.0	530.9	799.4	956.0	530.9	799.4	956.0	530.9	799.4	956.0	530.9
H_2O Weight	-	gm	77.9	91.1	267.4	70.7	78.0	274.7	82.6	96.0	286.2	107.9	132.6	321.9
Sample Time	-	minutes	116	120	120	110	110	120	120	120	120	120	120	120
Barometric Pressure	-	" Hg	28.85	28.85	28.85	28.90	28.90	28.90	28.86	28.86	28.86	28.78	28.78	28.78
Static Pressure	-	" H_20	-15.50	-33.70	-1.60	-15.27	-34.10	-1.45	-15.33	-33.70	-1.22	-14.38	-32.30	-1.50
% Oxygen	-		4.5	5.4	7.4	4.5	5.0	7.3	4.0	6.2	7.4	4.0	5.4	7.4
% Carbon Dioxide	-		15.7	14.6	12.9	15.6	15.0	12.9	16.1	13.9	12.8	16.1	14.7	12.7
% N_2 + CO	-		79.9	80.0	79.7	79.9	80.0	79.8	80.0	79.9	79.8	79.9	79.9	79.9
Stack Temp (Dry Bulb)	-	°F	657	273	123	657	261	124	658	263	124	643	271	129
Stack Temp (Wet Bulb)	-	°F	657.3	272.5	122.5	656.9	260.5	123.8	657.9	262.8	123.8	643.3	270.5	128.5
"S" sample (rms vel head)	-	" H_20	0.350	0.680	1.463	0.324	0.720	1.471	0.308	0.700	1.523	0.336	0.672	1.448
Dust Wt.	-	gm	6.6021	9.6530	0.0468	3.5050	6.7323	0.0233	5.8554	9.4174	0.0269	7.5775	7.8574	0.0284
Sample Volume	-	DSCF	35.60	46.87	76.66	31.63	41.50	77.29	31.29	46.15	78.12	34.59	44.62	77.23
Sample Volume	-	dscm	1.008	1.327	2.171	0.896	1.175	2.189	0.886	1.307	2.212	0.979	1.264	2.187
ABS ST PRES	-	" Hg	27.71	26.37	28.73	27.78	26.39	28.79	27.73	26.38	28.77	27.72	26.41	28.67
ABS ST TEMP	-	°R	1117	733	583	1117	721	584	1118	723	584	1103	731	589
H_2O - % by Vol	-	vapor	9.3	8.4	14.1	9.5	8.1	14.3	11.1	8.9	14.7	12.8	12.3	16.4
Water Volume	-	std ft^3	3.67	4.29	12.59	3.33	3.67	12.94	3.89	4.52	13.48	5.08	6.25	15.16
Dry Molecular Weight	-	lb/lb-mole	30.68	30.55	30.36	30.68	30.60	30.36	30.73	30.47	30.34	30.73	30.57	30.33
Wet Molecular Weight	-	lb/lb-mole	29.50	29.50	28.62	29.47	29.58	28.58	29.32	29.36	28.53	29.10	29.02	28.30
% EXCESS AIR	-		26.7	34.4	54.2	27.1	31.0	53.0	23.4	41.6	54.1	23.2	34.4	54.0
Dry Mole Frac.	-		0.907	0.916	0.859	0.905	0.919	0.857	0.889	0.911	0.853	0.872	0.877	0.836
Wet Mole Frac.	-		0.093	0.084	0.141	0.095	0.081	0.143	0.111	0.089	0.147	0.128	0.123	0.164
Gas Velocity, Direct	-	ft/sec	49.67	57.87	72.94	47.75	58.96	73.18	46.73	58.45	74.57	48.68	57.88	73.41
ACFM	-		2,382,488	3,319,527	2,323,420	2,290,212	3,381,990	2,331,184	2,241,381	3,352,951	2,375,335	2,334,944	3,320,182	2,338,632
DSCFM	-		945,299	1,932,140	1,737,059	909,400	2,008,416	1,738,021	872,733	1,966,971	1,761,765	902,629	1,857,824	1,680,596
DSCFM (rounded)			945,300	1,932,100	1,737,100	909,400	2,008,400	1,738,000	872,700	1,967,000	1,761,800	902,600	1,857,800	1,680,600
DSCMM			26,771	54,718	49,194	25,754	56,878	49,221	24,716	55,705	49,893	25,562	52,614	47,594
Stack Based DSCFM	-		1,636,781	1,512,958	1,737,100	1,685,012	1,486,591	1,738,000	1,532,453	1,617,980	1,761,800	1,539,557	1,463,748	1,680,600
Stack Based DSCMM	-		46,353	42,846	49,194	47,720	42,101	49,221	43,398	45,820	49,893	43,600	41,453	47,594
Excess Air Free DSCFM	-		744,027	1,432,927	1,122,024	713,596	1,527,934	1,130,961	705,703	1,383,467	1,137,982	730,741	1,377,812	1,085,553
CALCULATED FIRING RATE:														
Dry	-	lb/min	5,836	11,240	8,802	5,603	11,997	8,880	5,429	10,644	8,755	5,674	10,698	8,821
Wet	-	lb/min	5,836	11,240	8,802	5,603	11,997	8,880	5,429	10,644	8,755	5,674	10,698	8,821
Dry	-	lb/hr	350,185	674,424	528,094	336,183	719,827	532,808	325,769	638,641	525,319	340,438	641,895	529,234
Wet	-	lb/hr	350,185	674,424	528,094	336,183	719,827	532,808	325,769	638,641	525,319	340,438	641,895	529,234
CALCULATED FIRING RATE:														
Dry	-	tons/hr	175.1	337.2	264.0	168.1	359.9	266.4	162.9	319.3	262.7	170.2	320.9	264.6
Wet	-	tons/hr	175.1	337.2	264.0	168.1	359.9	266.4	162.9	319.3	262.7	170.2	320.9	264.6
HEAT INPUT:														
MM Btu/hr	-		4,517	8,700	6,812	4,374	9,366	6,932	4,251	8,334	6,855	4,473	8,433	6,953
PARTICULATE LOADING:														
Grains/DSCF	-		2.8618	3.1782	0.0094	1.7096	2.5032	0.0047	2.8875	3.1486	0.0053	3.3806	2.7173	0.0057
lb/hr	-		23,197	52,652	140.30	13,331	43,108	69.32	21,607	53,104	80.26	26,164	43,285	82
lb/MM Btu	-		5.13	6.05	0.02	3.05	4.60	0.01	5.08	6.37	0.01	5.85	5.13	0.01
Ash Production		lb/hr	47,800	92,059	72,085	43,906	94,009	69,585	37,301	73,124	60,149	42,146	79,467	65,519
Bagouse Ash			23,197	52,652	140.3	13,331	43,108	69.3	21,607	53,104	80.3	26,164	43,285	81.8
Bottom Ash			24,604	39,407	71,945	30,574	50,902	69,515	15,693	20,020	60,069	15,983	36,181	65,437
Percent Fly Ash			48.5%	57.2%	0.2%	30.4%	45.9%	0.1%	57.9%	72.6%	0.1%	62.1%	54.5%	0.1%
% ISOKINETIC	-		106.0	105.9	98.2	103.2	98.4	99.0	97.5	102.4	98.7	104.2	104.9	102.3

ppm Hg in Coal	0.13	0.13	0.13	0.11	0.11	0.11	0.10	0.10	0.10	0.10	0.10	0.10
µg Hg/dscm	12.85	12.11	10.55	10.85	10.52	9.00	9.96	8.67	7.96	10.07	9.22	8.40

Date	7/20/2004	7/20/2004	7/20/2004	7/21/2004	7/21/2004	7/21/2004	7/21/2004	7/21/2004	7/21/2004	7/22/2004	7/22/2004	7/22/2004
COAL DATA:												
% Carbon	71.48	71.48	71.48	71.85	71.85	71.85	73.44	73.44	73.44	72.74	72.74	72.74
% Hydrogen	4.93	4.93	4.93	4.81	4.81	4.81	4.85	4.85	4.85	4.85	4.85	4.85
% Nitrogen	1.24	1.24	1.24	1.22	1.22	1.22	1.27	1.27	1.27	1.26	1.26	1.26
% Sulfur	3.86	3.86	3.86	3.78	3.78	3.78	3.78	3.78	3.78	3.57	3.57	3.57
% Oxygen	4.79	4.79	4.79	5.23	5.23	5.23	5.16	5.16	5.16	5.15	5.15	17.58
% Ash	13.65	13.65	13.65	13.06	13.06	13.06	11.45	11.45	11.45	12.38	12.38	12.38
% Volatile Matter	38.09	38.09	38.09	38.85	38.85	38.85	39.87	39.87	39.87	39.09	39.09	39.09
Heating Value [Btu/lb, dry]	12,900	12,900	12,900	13,011	13,011	13,011	13,050	13,050	13,050	13,138	13,138	13,138
CARBON CONVERSION	99.00%	99.00%	99.00%	99.00%	99.00%	99.00%	99.00%	99.00%	99.00%	99.00%	99.00%	99.00%
CALCULATED FEED	380,103	724,785	575,734	362,623	770,053	573,086	350,289	683,726	563,933	366,686	689,526	538,885
F-Factor	9,882	9,882	9,882	9,789	9,789	9,789	9,960	9,960	9,960	9,803	9,803	9,368
Moisture		0.00%	0.00%		0.00%	0.00%		0.00%	0.00%		0.00%	0.00%

% Water Vapor Calculation:													
Barometric Pressure, In Hg		28.85	28.85	28.85	28.9	28.9	28.9	28.86	28.86	28.86	28.78	28.78	28.78
DUCT Static Pressure, in H2O		-15.5	-33.7	-1.6	-15.27	-34.1	-1.45	-15.33	-33.7	-1.22	-14.38	-32.3	-1.5
DRY Bulb Temp		657.3	272.5	122.5	656.9	260.5	123.8	657.9	262.8	123.8	643.4	270.5	128.5
WET Bulb Temp		657.3	272.5	122.5	656.9	260.5	123.8	657.9	262.8	123.8	643.3	270.5	128.5
Press, ATMS		13.61	12.95	14.11	13.64	12.96	14.14	13.62	12.95	14.13	13.61	12.96	14.08
Intermediate result		-193.93	-8.97	12.26	-193.59	-6.41	12.23	-194.39	-6.89	12.21	-183.26	-8.52	11.90
Intermediate result		0.00	0.00	0.00	0.00	0.00	0.00	0.00	0.00	0.00	0.10	0.00	0.00
Intermediate result		57.93	19.45	4.45	57.89	18.25	4.58	57.99	18.48	4.58	56.53	19.25	5.05
Intermediate result		335.59	37.83	1.98	335.13	33.31	2.10	336.28	34.15	2.10	319.56	37.06	2.55
Intermediate result		0.00	0.00	0.00	0.00	0.00	0.00	0.00	0.00	0.00	0.37	0.00	0.00
Intermediate result		344.92	41.70	3.72	344.45	37.01	3.86	345.63	37.88	3.86	328.70	40.90	4.37
Intermediate result		207.54	21.92	1.84	207.23	19.36	1.91	208.00	19.84	1.91	196.87	21.48	2.17
Intermediate result		-10,702	-24,431	1,503	-10,704	-30,229	1,564	-10,700	-28,807	1,565	-10,743	-25,220	1,826
Intermediate result		-701.5	-14,431	11,503	-704.5	-20,229	11,564	-700.5	-18,807	11,565	-743.5	-15,220	11,826
Percent Water Vapor		1,525.4	169.29	13.07	1,519.5	149.43	13.52	1,527.6	153.17	13.53	1,444.8	165.70	15.44
	% CO_2	15.65	14.60	12.90	15.60	15.00	12.90	16.05	13.90	12.80	16.09	14.70	12.70
	ppm	156,500	146,000	129,000	156,000	150,000	129,000	160,500	139,000	128,000	160,900	147,000	127,000
	lb/dscf	1.68E-02	1.58E-02	1.40E-02	1.68E-02	1.62E-02	1.40E-02	1.72E-02	1.51E-02	1.39E-02	1.73E-02	1.59E-02	1.38E-02
	lb/hr	954,696	1,828,172	1,461,395	915,685	1,949,345	1,462,397	902,584	1,776,548	1,471,466	935,658	1,768,969	1,393,441
	lb/hr Carbon	260,372	498,592	398,562	249,732	531,640	398,836	246,159	484,513	401,309	255,180	482,446	380,029
	lb/hr Coal	364,258	697,527	557,586	347,574	739,930	555,095	335,184	659,740	546,445	350,810	663,247	522,449
ppm Hg in Coal		0.13	0.13	0.13	0.11	0.11	0.11	0.10	0.10	0.10	0.10	0.10	0.10
Gas Phase Hg Conc., ug/m^3		12.85	12.11	10.55	10.85	10.52	9.00	9.96	8.67	7.96	10.07	9.22	8.40
Gas Phase Hg Conc., ug/m^3		13.37	12.53	11.14	11.22	10.82	9.38	10.25	8.95	8.28	10.37	9.53	8.30

Harrison #1: Summaries of Hg Emissions and Mass Balance Closures					
Our Test Data	**Test 1**	**Test 2**	**Test 3**	**Test 4**	**Average**
Test Duration	7/20/04 13:00-16:00	7/21/04 10:15-14:00	7/21/04 15:45-18:00	7/22/04 10:30-13:00	
Coal feed rate (kpph)	486.54	486.48	481.8	456.82	477.9
Heat Rate (MM Btu/Hr)	6,193.5	6,252.4	6,205.1	5,929.1	6,145.0
Hg in coal (ppm, as det'd)	0.13	0.11	0.10	0.10	0.11
Gross Generation (MW)	673.0	673.0	667.7	633.9	661.9
Stack Hg flowrate (mg/sec)	0.88	1.09	0.92	0.62	0.88
Hg emissions rate (lb/hr)	6.96E-03	8.67E-03	7.30E-03	4.90E-03	6.96E-03
Hg emissions (lb/T Btu)	1.123	1.387	1.177	0.827	1.13
Coal-to-stack Hg removal	89.0%	83.8%	84.8%	89.3%	86.7%
Hg Closure	88.7%	103.4%	104.6%	97.7%	98.6%
SiO_2 Closure	102.8%	101.5%	101.3%	98.4%	101.0%
Al_2O_3 Closure	102.6%	99.4%	98.7%	94.5%	98.8%
CaO Closure	113.1%	112.5%	101.7%	96.7%	106.0%
EPA's Emissions Database	**Test 1**	**Test 2**	**Test 3**	**Test 4**	**Average**
Test Duration	7/20/04 13:00-16:00	7/21/04 10:00-14:00	7/21/04 15:00-18:00	7/22/04 10:00-13:00	
Heat Rate (MM Btu/Hr)	6,564.9	6,580.9	6,538.6	6,260.0	6,486.1
Gross Generation (MW)	675.3	674.2	670.5	636.0	664.0

Hg input from Coal =	6.33E-02	lb/Hr	7.98
Hg input from lime slurry stream =	5.35E-03	lb/Hr	0.67
Hg input from ME Wash stream =	0.00E+00	lb/Hr	0.00
Hg input from Centrate Return stream =	7.76E-03	lb/Hr	0.98
Hg input from FGD Makeup stream =	6.54E-05	lb/Hr	0.01
Hg input into the system =	7.64E-02	lb/Hr	9.64
Hg output via Bottom Ash stream =	5.28E-05	lb/Hr	0.01
Hg output via ESP Hopper Ash stream =	3.80E-03	lb/Hr	0.48
Hg output via FGD Slurry stream =	5.70E-02	lb/Hr	7.19
Hg output via stack flue gas =	6.96E-03	lb/Hr	0.88
Hg output from the system =	6.78E-02	lb/Hr	8.55
Hg closure (out / in) =	**88.7%**		

Hg input from Coal =	5.35E-02	lb/Hr	6.75
Hg input from lime slurry stream =	2.39E-03	lb/Hr	0.30
Hg input from ME Wash stream =	0.00E+00	lb/Hr	0.00
Hg input from Centrate Return stream =	7.83E-03	lb/Hr	0.99
Hg input from FGD Makeup stream =	2.97E-04	lb/Hr	0.04
Hg input into the system =	6.40E-02	lb/Hr	8.07
Hg output via Bottom Ash stream =	5.06E-05	lb/Hr	0.01
Hg output via ESP Hopper Ash stream =	4.21E-03	lb/Hr	0.53
Hg output via FGD Slurry stream =	5.33E-02	lb/Hr	6.72
Hg output via stack flue gas =	8.67E-03	lb/Hr	1.09
Hg output from the system =	6.62E-02	lb/Hr	8.35
Hg closure (out / in) =	**103.4%**		

Hg input from Coal =	4.82E-02	lb/Hr	6.08
Hg input from lime slurry stream =	2.24E-04	lb/Hr	0.03
Hg input from ME Wash stream =	0.00E+00	lb/Hr	0.00
Hg input from Centrate Return stream =	7.78E-03	lb/Hr	0.98
Hg input from FGD Makeup stream =	4.91E-04	lb/Hr	0.06
Hg input into the system =	5.67E-02	lb/Hr	7.15
Hg output via Bottom Ash stream =	4.38E-05	lb/Hr	0.01
Hg output via ESP Hopper Ash stream =	3.19E-03	lb/Hr	0.40
Hg output via FGD Slurry stream =	4.88E-02	lb/Hr	6.15
Hg output via stack flue gas =	7.30E-03	lb/Hr	0.92
Hg output from the system =	5.93E-02	lb/Hr	7.48
Hg closure (out / in) =	**104.6%**		

Hg input from Coal =	4.57E-02	lb/Hr	5.76
Hg input from lime slurry stream =	1.47E-04	lb/Hr	0.02
Hg input from ME Wash stream =	0.00E+00	lb/Hr	0.00
Hg input from Centrate Return stream =	7.47E-03	lb/Hr	0.94
Hg input from FGD Makeup stream =	7.57E-04	lb/Hr	0.10
Hg input into the system =	5.41E-02	lb/Hr	6.82
Hg output via Bottom Ash stream =	4.50E-05	lb/Hr	0.01
Hg output via ESP Hopper Ash stream =	4.75E-03	lb/Hr	0.60
Hg output via FGD Slurry stream =	4.31E-02	lb/Hr	5.44
Hg output via stack flue gas =	4.90E-03	lb/Hr	0.62
Hg output from the system =	5.28E-02	lb/Hr	6.66
Hg closure (out / in) =	**97.7%**		

Project No	Test	Date	Loc.	Operator	Sample ID #	Task	Description	Anal No.	Hg	Units
1621-87	1	07/23/04	SCRIN	#VALUE!	1		PROBE & FILTER RINSE	20043457	<1.0	ng/ml
1621-87	1	07/23/04	SCRIN	#VALUE!	2		KCL IMPINGERS	20043458	2.6	ng/ml
1621-87	1	07/23/04	SCRIN	#VALUE!	3		HNO3/H2O2 IMPINGER	20043459	0.8	ng/ml
1621-87	1	07/23/04	SCRIN	#VALUE!	4		KMNO4 IMPINGER	20043460	44.3	ng/ml
1621-87	1	07/23/04	SCRIN	#VALUE!	5		KMNO4 ACID RINSE	20043461	<1.0	ng/ml
1621-87	1	07/23/04	AHO	#VALUE!	6		PROBE & FILTER RINSE	20043462	<1.0	ng/ml
1621-87	1	07/23/04	AHO	#VALUE!	7		HEATED LINE RINSE	20043463	1.6	ng/ml
1621-87	1	07/23/04	AHO	#VALUE!	8		KCL IMPINGER	20043464	27.4	ng/ml
1621-87	1	07/23/04	AHO	#VALUE!	9		HNO3/H2O2 IMPINGER	20043465	0.5	ng/ml
1621-87	1	07/23/04	AHO	#VALUE!	10		KMNO4 IMPINGER	20043466	1.6	ng/ml
1621-87	1	07/23/04	AHO	#VALUE!	11		KMNO4 ACID RINSE	20043467	<1.0	ng/ml
1621-87	1	07/23/04	STACK	#VALUE!	12		PROBE & FILTER RINSE	20043468	2.5	ng/ml
1621-87	1	07/23/04	STACK	#VALUE!	13		KCL IMPINGER	20043469	2.2	ng/ml
1621-87	1	07/23/04	STACK	#VALUE!	14		HNO3/H2O2 IMPINGER	20043470	<0.2	ng/ml
1621-87	1	07/23/04	STACK	#VALUE!	15		KMNO4 IMPINGER	20043471	1.2	ng/ml
1621-87	1	07/23/04	STACK	#VALUE!	16		KMNO4 ACID RINSE	20043472	<1.0	ng/ml
1621-87	#VALUE!	07/23/04	#VALUE!	#VALUE!	17	#VALUE!	KCL BLANK	20043473	0.3	ng/ml
1621-87	#VALUE!	07/23/04	#VALUE!	#VALUE!	18	#VALUE!	HNO3/H2O2 BLANK	20043474	<0.2	ng/ml
1621-87	#VALUE!	07/23/04	#VALUE!	#VALUE!	19	#VALUE!	KMNO4 BLANK	20043475	<0.2	ng/ml
1621-87	#VALUE!	07/23/04	#VALUE!	#VALUE!	20	#VALUE!	HNO3/HCL BLANK	20043476	<0.2	ng/ml
1621-87	2	07/23/04	SCRIN	#VALUE!	21		PROBE & FILTER RINSE	20043477	<1.0	ng/ml
1621-87	2	07/23/04	SCRIN	#VALUE!	22		KCL IMPINGER	20043478	2.8	ng/ml
1621-87	2	07/23/04	SCRIN	#VALUE!	23		HNO3/H2O2 IMPINGER	20043479	1.0	ng/ml
1621-87	2	07/23/04	SCRIN	#VALUE!	24		KMNO4 IMPINGER	20043480	24.6	ng/ml
1621-87	2	07/23/04	SCRIN	#VALUE!	25		KMNO4 ACID RINSE	20043481	<1.0	ng/ml
1621-87	2	07/23/04	AHO	#VALUE!	26		PROBE & FILTER RINSE	20043482	1.1	ng/ml
1621-87	2	07/23/04	AHO	#VALUE!	27		HEATED LINE RINSE	20043483	<1.0	ng/ml
1621-87	2	07/23/04	AHO	#VALUE!	28		KCL IMPINGER	20043484	20.3	ng/ml
1621-87	2	07/23/04	AHO	#VALUE!	29		HNO3/H2O2 IMPINGER	20043485	<0.2	ng/ml
1621-87	2	07/23/04	AHO	#VALUE!	30		KMNO4 IMPINGER	20043486	0.8	ng/ml
1621-87	2	07/23/04	AHO	#VALUE!	31		KMNO4 ACID RINSE	20043487	<1.0	ng/ml
1621-87	2	07/23/04	STACK	#VALUE!	32		PROBE & FILTER RINSE	20043488	3.0	ng/ml
1621-87	2	07/23/04	STACK	#VALUE!	33		KCL IMPINGER	20043489	2.7	ng/ml
1621-87	2	07/23/04	STACK	#VALUE!	34		HNO3/H2O2 IMPINGER	20043490	<0.2	ng/ml
1621-87	2	07/23/04	STACK	#VALUE!	35		KMNO4 IMPINGER	20043491	2.1	ng/ml
1621-87	2	07/23/04	STACK	#VALUE!	36		KMNO4 ACID RINSE	20043492	<1.0	ng/ml
1621-87	#VALUE!	07/23/04	#VALUE!	#VALUE!	37	#VALUE!	KMNO4 BLANK	20043493	0.2	ng/ml
1621-87	3	07/23/04	SCRIN	#VALUE!	38		PROBE & FILTER RINSE	20043494	2.3	ng/ml
1621-87	3	07/23/04	SCRIN	#VALUE!	39		KCL IMPINGER	20043495	5.5	ng/ml
1621-87	3	07/23/04	SCRIN	#VALUE!	40		HNO3/H2O2 IMPINGER	20043496	1.5	ng/ml
1621-87	3	07/23/04	SCRIN	#VALUE!	41		KMNO4 IMPINGER	20043497	19.5	ng/ml
1621-87	3	07/23/04	SCRIN	#VALUE!	42		KMNO4 ACID RINSE	20043498	<1.0	ng/ml
1621-87	3	07/23/04	AHO	#VALUE!	43		PROBE & FILTER RINSE	20043499	<1.0	ng/ml
1621-87	3	07/23/04	AHO	#VALUE!	44		HEATED LINE RINSE	20043500	3.5	ng/ml
1621-87	3	07/23/04	AHO	#VALUE!	45		KCL IMPINGER	20043501	19.3	ng/ml
1621-87	3	07/23/04	AHO	#VALUE!	46		HNO3/H202 IMPINGER	20043502	0.3	ng/ml
1621-87	3	07/23/04	AHO	#VALUE!	47		KMNO4 IMPINGER	20043503	1.6	ng/ml
1621-87	3	07/23/04	AHO	#VALUE!	48		KMNO4 ACID RINSE	20043504	<1.0	ng/ml
1621-87	3	07/23/04	AHO	#VALUE!	49		PROBE & FILTER RINSE	20043505	3.1	ng/ml
1621-87	3	07/23/04	AHO	#VALUE!	50		KCL IMPINGER	20043506	2.0	ng/ml
1621-87	3	07/23/04	AHO	#VALUE!	51		HNO3/H202 IMPINGER	20043507	<0.2	ng/ml
1621-87	3	07/23/04	AHO	#VALUE!	52		KMNO4 IMPINGER	20043508	1.7	ng/ml
1621-87	3	07/23/04	AHO	#VALUE!	53		KMNO4 ACID RINSE	20043509	<1.0	ng/ml
1621-87	#VALUE!	07/23/04	#VALUE!	#VALUE!	54	#VALUE!	KMNO4 BLANK	20043510	<0.2	ng/ml
1621-87	4	07/23/04	SCRIN	#VALUE!	55		PROBE & FILTER RINSE	20043511	<1.0	ng/ml
1621-87	4	07/23/04	SCRIN	#VALUE!	56		KCL IMPINGER	20043512	4.2	ng/ml
1621-87	4	07/23/04	SCRIN	#VALUE!	57		HNO3/H202 IMPINGER	20043513	3.4	ng/ml
1621-87	4	07/23/04	SCRIN	#VALUE!	58		KMNO4 IMPINGER	20043514	31.3	ng/ml
1621-87	4	07/23/04	SCRIN	#VALUE!	59		KMNO4 ACID RINSE	20043515	1.0	ng/ml
1621-87	4	07/23/04	AHO	#VALUE!	60		PROBE & FILTER RINSE	20043516	<1.0	ng/ml
1621-87	4	07/23/04	AHO	#VALUE!	61		HEATED LINE RINSE	20043517	1.7	ng/ml
1621-87	4	07/23/04	AHO	#VALUE!	62		KCL IMPINGER	20043518	15.4	ng/ml
1621-87	4	07/23/04	AHO	#VALUE!	63		HNO3/H2O2 IMPINGER	20043519	0.3	ng/ml
1621-87	4	07/23/04	AHO	#VALUE!	64		KMNO4 IMPINGER	20043520	1.8	ng/ml
1621-87	4	07/23/04	AHO	#VALUE!	65		KMNO4 ACID RINSE	20043521	<1.0	ng/ml
1621-87	4	07/23/04	STACK	#VALUE!	66		PROBE & FILTER RINSE	20043522	3.0	ng/ml
1621-87	4	07/23/04	STACK	#VALUE!	67		KCL IMPINGER	20043523	1.2	ng/ml
1621-87	4	07/23/04	STACK	#VALUE!	68		HNO3/H2O2 IMPINGER	20043524	<0.2	ng/ml
1621-87	4	07/23/04	STACK	#VALUE!	69		KMNO4 IMPINGER	20043525	2.3	ng/ml
1621-87	4	07/23/04	STACK	#VALUE!	70		KMNO4 ACID RINSE	20043526	<1.0	ng/ml
1621-87	#VALUE!	07/23/04	#VALUE!	#VALUE!	71	#VALUE!	KMNO4 BLANK	20043527	<0.2	ng/ml
1621-87	#VALUE!	07/23/04	#VALUE!	#VALUE!	72	#VALUE!	KCL BLANK	20043528	0.5	ng/ml
1621-87	#VALUE!	07/23/04	#VALUE!	#VALUE!	73	#VALUE!	HNO3/H2O2 BLANK	20043529	0.3	ng/ml
1621-87	#VALUE!	07/23/04	#VALUE!	#VALUE!	74	#VALUE!	KMNO4 BLANK	20043530	<0.2	ng/ml
1621-87	#VALUE!	07/23/04	#VALUE!	#VALUE!	75	#VALUE!	HNO3/H2O2 BLANK	20043531	<0.2	ng/ml

Average Blank 0.3

					Dry Basis													As Determined	
ANALNUM	SAMPLE	DATE	DESCR	Moisture	Ash	Carbon	Hydrogen	SiO2	Al2O3	TiO2	Fe2O3	CaO	MgO	Na2O	K2O	P2O5	SO3	Hg	
20043532	1	7/20/04	HARRISON THIMBLE															< 0.004	PPM
20043533	7-8	7/20/04	HARRISON THIMBLE															0.12	PPM
20043534	2	7/21/04	HARRISON THIMBLE															0.01	PPM
20043535	9	7/21/04	HARRISON THIMBLE															0.21	PPM
20043536	3	7/21/04	HARRISON THIMBLE															< 0.004	PPM
20043537	10-11	7/21/04	HARRISON THIMBLE															0.1	PPM
20043538	4	7/22/04	HARRISON THIMBLE															< 0.004	PPM
20043539	12	7/22/04	HARRISON THIMBLE															0.12	PPM
20043540	1	7/20/04	HARRISON 3 IN. FILTER															< 5.0	ng/FILTER
20043541	2	7/21/04	HARRISON 3 IN. FILTER															< 5.0	ng/FILTER
20043542	3	7/21/04	HARRISON 3 IN. FILTER															< 5.0	ng/FILTER
20043543	4	7/22/04	HARRISON 3 IN. FILTER															< 5.0	ng/FILTER
20043544	FILTER BLANK	7/22/04	HARRISON 3 IN. FILTER BLANK															< 5.0	ng/FILTER
20043545	THIMBLE BLANK	7/22/04	HARRISON 3 IN. THIMBLE BLANK															< 0.005	ppm

14

Reruns

Project No	Test	Date	Loc.	Operator	Sample ID #	Task	Description	Anal No.	Original	Re-digestion
									ng/ml	ng/ml
1621-87	2	7/23/04	AHO	#VALUE!	27		HEATED LINE RINSE	20043483	<1.0	<1.0
1621-87	3	7/23/04	AHO	#VALUE!	44		HEATED LINE RINSE	20043500	3.5	3.2
1621-87	4	7/23/04	SCRIN	#VALUE!	57		HNO3/H202 IMPINGER	20043513	3.4	3.7
1621-87	#VALUE!	7/23/04	#VALUE!	#VALUE!	73	#VALUE!	HNO3/H2O2 BLANK	20043529	0.3	< 0.2
1621-87	#VALUE!	7/23/04	#VALUE!	#VALUE!	17	#VALUE!	KCL BLANK	20043473	<0.2	
1621-87	#VALUE!	7/23/04	#VALUE!	#VALUE!	72	#VALUE!	KCL BLANK	20043528	0.5	< 0.2
1621-87	4	7/23/04	AHO	#VALUE!	62		KCL IMPINGER	20043518	15.4	15.6
1621-87	4	7/23/04	STACK	#VALUE!	67		KCL IMPINGER	20043523	1.2	0.7
1621-87	#VALUE!	7/23/04	#VALUE!	#VALUE!	37	#VALUE!	KMNO4 BLANK	20043493	0.2	< 0.2
1621-87	1	7/23/04	SCRIN	#VALUE!	4		KMNO4 IMPINGER	20043460	44.3	47.9
1621-87	2	7/23/04	SCRIN	#VALUE!	24		KMNO4 IMPINGER	20043480	24.6	32.2
1621-87	2	7/23/04	AHO	#VALUE!	30		KMNO4 IMPINGER	20043486	0.8	0.6
1621-87	3	7/23/04	SCRIN	#VALUE!	41		KMNO4 IMPINGER	20043497	19.5	28.2
1621-87	4	7/23/04	SCRIN	#VALUE!	58		KMNO4 IMPINGER	20043514	31.3	33.6
1621-87	3	7/23/04	SCRIN	#VALUE!	38		PROBE & FILTER RINSE	20043494	2.3	1.1

Run 1 Filters and Blank Thimble

149 ng/ml ?

141

NIST Flyash Standard			PPM		
NIST 1633B			0.133	94%	good
NIST 1633B			0.~~14~~ (137)	97%	good

Continuing Calibration Verification			ng/ml		
1641d 8 ppb			8.1	101%	good
1641d 8ppb			8.2	103%	good

6

Run 2 Particulate in Thimbles (run by D6722 on the AMA254)

Continuing Calibration Verification			PPM		
NIST 1633B			0.150	106%	good

Duplicates			PPM		
43059	4/22/04	CONEMAUGH TH	0.12	duplicate	good within 20% (0%)

Run 1, Probe and Heated Line Rinses

Duplicates and Spikes

								ng/ml		
1621-87	2	07/23/04	STACK	32		ROBE & FILTER RINS	20043488	3	original result	
1621-87	2	07/23/04	STACK	32		ROBE & FILTER RINS	20043488	2.7	duplicate	good within 20% (11%)
1621-87	2	07/23/04	STACK	32		ROBE & FILTER RINS	20043488	NA	2 ppb spike	good, 90%
1621-87	4	07/23/04	AHO	61		HEATED LINE RINSE	20043517	1.7	original result	
1621-87	4	07/23/04	AHO	61		HEATED LINE RINSE	20043517	<1.0	duplicate	**no good not within 20%, will repeat**
1621-87	4	07/23/04	AHO	61		HEATED LINE RINSE	20043517	NA	2 ppb spike	good, 96%

Continuing Calibration Verification ng/ml

1641d 8 ppb				8.1	101%	good
1641d 8ppb				8.0	100%	good
1641d 8ppb				7.9	99%	good
1641d 8ppb				8.0	100%	good

Run 2, KMnO4 Rinses

Duplicates and Spikes

								ng/ml		
1621-87	2	07/23/04	SCRIN	25		KMNO4 ACID RINSE	20043481	<1.0	original result	
1621-87	2	07/23/04	SCRIN	25		KMNO4 ACID RINSE	20043481	<1.0	duplicate	good within 20% (0%)
1621-87	2	07/23/04	SCRIN	25		KMNO4 ACID RINSE	20043481	NA	2 ppb spike	good, 90%
1621-87	3	07/23/04	AHO	53		KMNO4 ACID RINSE	20043509	1.8	original result	
1621-87	3	07/23/04	AHO	53		KMNO4 ACID RINSE	20043509	<1.0	duplicate	**no good not within 20%, will repeat**
1621-87	3	07/23/04	AHO	53		KMNO4 ACID RINSE	20043509	NA	2 ppb spike	good, 80%

Continuing Calibration Verification ng/ml

1641d 8 ppb				7.9	99%	good
1641d 8ppb				7.8	98%	good
1641d 8ppb				7.9	99%	good

Run 3, KCL Impingers

Duplicates and Spikes ng/ml

1621-87	1	07/23/04	AHO	8		KCL IMPINGER	20043464	27.4	original result	
1621-87	1	07/23/04	AHO	8		KCL IMPINGER	20043464	28.2	duplicate	good within 20% (2.8%)
1621-87	1	07/23/04	AHO	8		KCL IMPINGER	20043464	NA	10 ppb spike	good, 90%
1621-87	3	07/23/04	SCRIN	39		KCL IMPINGER	20043495	5.5	original result	
1621-87	3	07/23/04	SCRIN	39		KCL IMPINGER	20043495	5.7	duplicate	good within 20% (3.6%)
1621-87	3	07/23/04	SCRIN	39		KCL IMPINGER	20043495	NA	10 ppb spike	good, 91%
1621-87	4	07/23/04	STACK	67		KCL IMPINGER	20043523	1.2	original result	
1621-87	4	07/23/04	STACK	67		KCL IMPINGER	20043523	1.0	duplicate	good within 20% (18%)
1621-87	4	07/23/04	STACK	67		KCL IMPINGER	20043523	NA	10 ppb spike	good, 87%

Continuing Calibration Verification ng/ml

1641d 8 ppb				7.9	99%	good
1641d 8ppb				8.0	100%	good
1641d 8ppb				7.8	98%	good
1641d 8ppb				8.1	101%	good

Run 4, KMNO4 Impingers

Duplicates and Spikes ng/ml

1621-87	2	07/23/04	STACK	35		KMNO4 IMPINGER	20043491	2.1	original result	
1621-87	2	07/23/04	STACK	35		KMNO4 IMPINGER	20043491	2.1	duplicate	good within 20% (0%)
1621-87	2	07/23/04	STACK	35		KMNO4 IMPINGER	20043491	NA	10 ppb spike	good, 96%
1621-87	3	07/23/04	AHO	47		KMNO4 IMPINGER	20043503	1.6	original result	
1621-87	3	07/23/04	AHO	47		KMNO4 IMPINGER	20043503	1.3	duplicate	good within 20% (20%)
1621-87	3	07/23/04	AHO	47		KMNO4 IMPINGER	20043503	NA	10 ppb spike	good, 92%
1621-87	4	07/23/04	SCRIN	58		KMNO4 IMPINGER	20043514	31.3	original result	
1621-87	4	07/23/04	SCRIN	58		KMNO4 IMPINGER	20043514	33.0	duplicate	good within 20% (5%)
1621-87	4	07/23/04	SCRIN	58		KMNO4 IMPINGER	20043514	NA	10 ppb spike	good, 87%

Continuing Calibration Verification ng/ml

1641d 8 ppb				8.1	101%	good
1641d 8ppb				8.2	103%	good
1641d 8ppb				8.0	100%	good
1641d 8ppb				8.1	101%	good

Run 5, HNO3 and H2O2 Impingers

Duplicates and Spikes

								ng/ml		
1621-87	2	07/23/04	STACK	34		HNO3/H2O2 IMPINGER	20043490	<0.2	original result	
1621-87	2	07/23/04	STACK	34		HNO3/H2O2 IMPINGER	20043490	0.5	duplicate	**no good not within 20%, will repeat**
1621-87	2	07/23/04	STACK	34		HNO3/H2O2 IMPINGER	20043490	NA	2 ppb spike	good, 98%
1621-87	1	07/23/04	SCRIN	3		HNO3/H2O2 IMPINGER	20043459	0.8	original result	
1621-87	1	07/23/04	SCRIN	3		HNO3/H2O2 IMPINGER	20043459	1.0	duplicate	good within 20% (20%)
1621-87	1	07/23/04	SCRIN	3		HNO3/H2O2 IMPINGER	20043459	NA	2 ppb spike	good, 90%
1621-87	4	07/23/04	SCRIN	57		HNO3/H202 IMPINGER	20043513	3.4	original result	
1621-87	4	07/23/04	SCRIN	57		HNO3/H202 IMPINGER	20043513	3.5	duplicate	good within 20% (3%)
1621-87	4	07/23/04	SCRIN	57		HNO3/H202 IMPINGER	20043513	NA	2 ppb spike	good, 100%

Continuing Calibration Verification ng/ml

1641d 8 ppb				8.1	101%	good
1641d 8ppb				8.1	101%	good
1641d 8ppb				8.2	103%	good
1641d 8ppb				8.3	104%	good

Run 6, Repeats

Duplicates and Spikes

								ng/ml			
1621-87	4	07/23/04	AHO	61		HEATED LINE RINSE	20043517	1.3	original result		
1621-87	4	07/23/04	AHO	61		HEATED LINE RINSE	20043517	<1.0	duplicate	**no good not within 20%, will repeat**	23.32
1621-87	4	07/23/04	AHO	61		HEATED LINE RINSE	20043517	NA	2 ppb spike	good, 90%	
1621-87	3	07/23/04	AHO	53		KMNO4 ACID RINSE	20043509	<1.0	original result		
1621-87	3	07/23/04	AHO	53		KMNO4 ACID RINSE	20043509	<1.0	duplicate	good within 20% (0%)	
1621-87	3	07/23/04	AHO	53		KMNO4 ACID RINSE	20043509	NA	2 ppb spike	good, 98%	
1621-87	2	07/23/04	STACK	34		HNO3/H2O2 IMPINGER	20043490	1.6	original result		
1621-87	2	07/23/04	STACK	34		HNO3/H2O2 IMPINGER	20043490	1.2	duplicate	**no good not within 20%, will repeat**	25%
1621-87	2	07/23/04	STACK	34		HNO3/H2O2 IMPINGER	20043490	NA	2 ppb spike	good, 90%	

Continuing Calibration Verification ng/ml

1641d 8 ppb				8.2	103%	good
1641d 8ppb				8.0	100%	good
1641d 8ppb				8.2	103%	good

APPENDIX D

Process Material Data

- Coal Analysis Data Sheets
- Ash Analysis Data Sheets
- Scrubber Sample Analysis Data Sheets

CONSOL ENERGY

Research and Development
www.consolenergy.com
4000 Brownsville Rd.
South Park, PA 15129

Sample Description.: COAL FROM COAL PIPES
Sample No.: COAL-1
Date Received: 07/27/2004
Date Completed: 08/30/2004

Analytical No.: 20043569
Project No.: 1621 -087 -
Submitted By: J. WITHUM

Proximate (Dry)	Wt%
Ash	13.65
Volatile Matter	38.09
Fixed Carbon	48.26
BTU/lb	12900
MAF BTU/lb	14939

Ash Fusion Reducing Temp (F)
Initial
Softening
Hemispherical.
Fluid

Trace Elements (ppm)	
Hg	0.132
F	

Ultimate (Dry)%	
Carbon	71.48
Hydrogen	4.91
Nitrogen	1.24
Chlorine	0.0497
Sulfur, Total	3.86
Ash	13.65
Oxygen (DIFF)	4.81

Ash Fusion Oxidizing
Initial
Softening
Hemispherical.
Fluid

Major Ash Elem. (Ignited @750)	
SiO_2	44.70
Al_2O_3	19.08
TiO_2	0.80
Fe_2O_3	21.90
CaO	4.38
MgO	1.14
Na_2O	0.82
K_2O	2.28
P_2O_5	0.39
SO_3	4.58
Undetermined	-0.07

Total Moisture

Misc.

Analysis	Value	
Hg	0.13	PPM

Sulfur Forms (Dry)	
Pyritic Sulfur	
Sulfate	
Organic	
Sulfur, Total	3.86

HGI/FSI
HGI
FSI

As Determined Moisture 1.32 %

These values are preliminary and are subject to change.

CONSOL ENERGY

Research and Development
www.consolenergy.com
4000 Brownsville Rd.
South Park, PA 15129

Sample Description.: COAL FROM COAL PIPES
Sample No.: COAL-2
Date Received: 07/27/2004
Date Completed: 08/30/2004

Analytical No.: 20043570
Project No.: 1621 -087 -
Submitted By: J. WITHUM

Proximate (Dry)	Wt%
Ash	13.06
Volatile Matter	38.85
Fixed Carbon	48.09
BTU/lb	13011
MAF BTU/lb	14965

Ash Fusion Reducing Temp (F)
Initial
Softening
Hemispherical.
Fluid

Trace Elements (ppm)	
Hg	0.111
F	

Ultimate (Dry)%	
Carbon	71.85
Hydrogen	4.80
Nitrogen	1.22
Chlorine	0.0476
Sulfur, Total	3.78
Ash	13.06
Oxygen (DIFF)	5.24

Ash Fusion Oxidizing
Initial
Softening
Hemispherical.
Fluid

Major Ash Elem. (Ignited @750)	
SiO2	45.30
Al2O3	19.53
TiO2	0.82
Fe2O3	21.18
CaO	4.45
MgO	1.20
Na2O	0.90
K2O	2.31
P2O5	0.35
SO3	4.64
Undetermined	-0.68

Total Moisture

Misc.

Analysis	Value	
Hg	0.11	PPM

Sulfur Forms (Dry)	
Pyritic Sulfur	
Sulfate	
Organic	
Sulfur, Total	3.78

HGI/FSI
HGI
FSI

As Determined Moisture 1.22 %

These values are preliminary and are subject to change.

CONSOL ENERGY

Research and Development
www.consolenergy.com
4000 Brownsville Rd.
South Park, PA 15129

Sample Description.: COAL FROM COAL PIPES
Sample No.: COAL-3
Date Received: 07/27/2004
Date Completed: 08/30/2004

Analytical No.: 20043571
Project No.: 1621 -087 -
Submitted By: J. WITHUM

Proximate (Dry)	Wt%
Ash	11.45
Volatile Matter	39.87
Fixed Carbon	48.68
BTU/lb	13050
MAF BTU/lb	14737

Ash Fusion Reducing Temp (F)
Initial
Softening
Hemispherical.
Fluid

Trace Elements (ppm)	
Hg	0.101
F	

Ultimate (Dry)%	
Carbon	73.44
Hydrogen	4.84
Nitrogen	1.27
Chlorine	0.0497
Sulfur, Total	3.78
Ash	11.45
Oxygen (DIFF)	5.17

Ash Fusion Oxidizing
Initial
Softening
Hemispherical.
Fluid

Major Ash Elem. (Ignited @750)	
SiO_2	44.18
Al_2O_3	19.72
TiO_2	0.83
Fe_2O_3	23.00
CaO	4.82
MgO	1.12
Na_2O	0.99
K_2O	2.14
P_2O_5	0.25
SO_3	3.77
Undetermined	-0.82

Total Moisture

Misc.

Analysis	Value	
Hg	0.10	PPM

Sulfur Forms (Dry)	
Pyritic Sulfur	
Sulfate	
Organic	
Sulfur, Total	3.78

HGI/FSI
HGI
FSI

As Determined Moisture 1.31 %

These values are preliminary and are subject to change.

CONSOL ENERGY

Research and Development
www.consolenergy.com
4000 Brownsville Rd.
South Park, PA 15129

Sample Description.: COAL FROM COAL PIPES
Sample No.: COAL-4
Date Received: 07/27/2004
Date Completed: 08/30/2004

Analytical No.: 20043572
Project No.: 1621 -087 -
Submitted By: J. WITHUM

Proximate (Dry)	Wt%
Ash	12.38
Volatile Matter	39.09
Fixed Carbon	48.53
BTU/lb	13138
MAF BTU/lb	14994

Ash Fusion Reducing Temp (F)
Initial
Softening
Hemispherical.
Fluid

Trace Elements (ppm)	
Hg	0.101
F	

Ultimate (Dry)%	
Carbon	72.74
Hydrogen	4.84
Nitrogen	1.26
Chlorine	0.0496
Sulfur, Total	3.57
Ash	12.38
Oxygen (DIFF)	5.16

Ash Fusion Oxidizing
Initial
Softening
Hemispherical.
Fluid

Major Ash Elem. (Ignited @750)	
SiO2	45.98
Al2O3	20.10
TiO2	0.83
Fe2O3	19.76
CaO	4.60
MgO	1.30
Na2O	0.99
K2O	2.25
P2O5	0.27
SO3	4.86
Undetermined	-0.94

Misc.

Analysis	Value	
Hg	0.10	PPM

Total Moisture

Sulfur Forms (Dry)	
Pyritic Sulfur	
Sulfate	
Organic	
Sulfur, Total	3.57

HGI/FSI
HGI
FSI

As Determined Moisture 1.21 %

These values are preliminary and are subject to change.

CONSOL ENERGY

Research and Development
www.consolenergy.com
4000 Brownsville Rd.
South Park, PA 15129

Sample Description.: TEST 1 COMPOSITE AS BURNED COAL
Sample No.:
Date Received: 07/27/2004
Date Completed: 08/30/2004

Analytical No.: 20043573
Project No.: 1621 -087 -
Submitted By: J. WITHUM

Proximate (Dry)	Wt%
Ash	12.86
Volatile Matter	38.15
Fixed Carbon	48.99
BTU/lb	13062
MAF BTU/lb	14990

Ash Fusion Reducing Temp (F)	
Initial	
Softening	
Hemispherical.	
Fluid	

Trace Elements (ppm)	
Hg	0.122
F	

Ultimate (Dry)%	
Carbon	72.33
Hydrogen	4.80
Nitrogen	1.23
Chlorine	0.0497
Sulfur, Total	3.67
Ash	12.86
Oxygen (DIFF)	5.06

Ash Fusion Oxidizing	
Initial	
Softening	
Hemispherical.	
Fluid	

Major Ash Elem. (Ignited @750)	
SiO_2	45.38
Al_2O_3	19.57
TiO_2	0.81
Fe_2O_3	21.57
CaO	4.29
MgO	1.18
Na_2O	0.86
K_2O	2.37
P_2O_5	0.39
SO_3	4.03
Undetermined	-0.45

Total Moisture

Misc.

Analysis	Value	
Hg	0.12	PPM

Sulfur Forms (Dry)	
Pyritic Sulfur	
Sulfate	
Organic	
Sulfur, Total	3.67

HGI/FSI
HGI
FSI

As Determined Moisture 1.38 %

These values are preliminary and are subject to change.

CONSOL ENERGY

Research and Development
www.consolenergy.com
4000 Brownsville Rd.
South Park, PA 15129

Sample Description.: TEST 1 AS FIRED COAL
Sample No.:
Date Received: 07/27/2004
Date Completed: 08/30/2004

Analytical No.: 20043574
Project No.: 1621 -087 -
Submitted By: J. WITHUM

Proximate (Dry)	Wt%
Ash	13.66
Volatile Matter	39.18
Fixed Carbon	47.16
BTU/lb	13167
MAF BTU/lb	15250

Ash Fusion Reducing Temp (F)	
Initial	
Softening	
Hemispherical.	
Fluid	

Trace Elements (ppm)	
Hg	0.122
F	

Ultimate (Dry)%	
Carbon	72.63
Hydrogen	4.71
Nitrogen	1.39
Chlorine	0.0496
Sulfur, Total	3.81
Ash	13.66
Oxygen (DIFF)	3.75

Ash Fusion Oxidizing	
Initial	
Softening	
Hemispherical.	
Fluid	

Major Ash Elem. (Ignited @750)	
SiO_2	45.78
Al_2O_3	19.62
TiO_2	0.81
Fe_2O_3	21.73
CaO	4.56
MgO	1.21
Na_2O	0.93
K_2O	2.35
P_2O_5	0.30
SO_3	3.76
Undetermined	-1.05

Misc.

Analysis	Value	
Hg	0.12	PPM

Total Moisture

Sulfur Forms (Dry)	
Pyritic Sulfur	
Sulfate	
Organic	
Sulfur, Total	3.81

HGI/FSI
HGI

FSI

As Determined Moisture 1.245 %

These values are preliminary and are subject to change.

CONSOL ENERGY

Research and Development
www.consolenergy.com
4000 Brownsville Rd.
South Park, PA 15129

Sample Description.: TEST 2 AS FIRED COAL
Sample No.:
Date Received: 07/27/2004
Date Completed: 08/30/2004

Analytical No.: 20043575
Project No.: 1621 -087 -
Submitted By: J. WITHUM

Proximate (Dry)	Wt%
Ash	12.00
Volatile Matter	39.39
Fixed Carbon	48.61
BTU/lb	13282
MAF BTU/lb	15093

Ash Fusion Reducing Temp (F)
Initial
Softening
Hemispherical.
Fluid

Trace Elements (ppm)	
Hg	0.101
F	

Ultimate (Dry)%	
Carbon	73.25
Hydrogen	4.84
Nitrogen	1.35
Chlorine	0.0476
Sulfur, Total	3.68
Ash	12.00
Oxygen (DIFF)	4.83

Ash Fusion Oxidizing
Initial
Softening
Hemispherical.
Fluid

Major Ash Elem. (Ignited @750)	
SiO2	45.78
Al2O3	19.68
TiO2	0.83
Fe2O3	21.73
CaO	4.55
MgO	1.24
Na2O	0.96
K2O	2.28
P2O5	0.29
SO3	3.65
Undetermined	-0.99

Misc.

Analysis	Value	
Hg	0.10	PPM

Total Moisture

Sulfur Forms (Dry)	
Pyritic Sulfur	
Sulfate	
Organic	
Sulfur, Total	3.68

HGI/FSI
HGI
FSI

As Determined Moisture 1.32 %

These values are preliminary and are subject to change.

CONSOL ENERGY

Research and Development
www.consolenergy.com
4000 Brownsville Rd.
South Park, PA 15129

Sample Description.: TEST 3 AS FIRED COAL
Sample No.:
Date Received: 07/27/2004
Date Completed: 08/30/2004

Analytical No.: 20043576
Project No.: 1621 -087 -
Submitted By: J. WITHUM

Proximate (Dry)	Wt%
Ash	11.96
Volatile Matter	39.71
Fixed Carbon	48.33
BTU/lb	13227
MAF BTU/lb	15024

Ash Fusion Reducing Temp (F)	
Initial	
Softening	
Hemispherical.	
Fluid	

Trace Elements (ppm)	
Hg	0.091
F	

Ultimate (Dry)%	
Carbon	73.15
Hydrogen	4.71
Nitrogen	1.32
Chlorine	0.0496
Sulfur, Total	3.70
Ash	11.96
Oxygen (DIFF)	5.11

Ash Fusion Oxidizing	
Initial	
Softening	
Hemispherical.	
Fluid	

Major Ash Elem. (Ignited @750)	
SiO_2	45.39
Al_2O_3	20.02
TiO_2	0.84
Fe_2O_3	21.69
CaO	4.43
MgO	1.28
Na_2O	0.99
K_2O	2.25
P_2O_5	0.22
SO_3	3.61
Undetermined	-0.72

Misc.

Analysis	Value	
Hg	0.09	PPM

Total Moisture

Sulfur Forms (Dry)	
Pyritic Sulfur	
Sulfate	
Organic	
Sulfur, Total	3.70

HGI/FSI	
HGI	
FSI	

As Determined Moisture 1.26 %

These values are preliminary and are subject to change.

CONSOL ENERGY

Research and Development
www.consolenergy.com
4000 Brownsville Rd.
South Park, PA 15129

Sample Description.: TEST 4 AS FIRED COAL
Sample No.:
Date Received: 07/27/2004
Date Completed: 08/30/2004

Analytical No.: 20043577
Project No.: 1621 -087 -
Submitted By: J. WITHUM

Proximate (Dry)	Wt%
Ash	12.42
Volatile Matter	39.61
Fixed Carbon	47.97
BTU/lb	13206
MAF BTU/lb	15079

Ash Fusion Reducing Temp (F)	
Initial	
Softening	
Hemispherical.	
Fluid	

Trace Elements (ppm)	
Hg	0.111
F	

Ultimate (Dry)%	
Carbon	72.95
Hydrogen	4.73
Nitrogen	1.36
Chlorine	0.0486
Sulfur, Total	3.77
Ash	12.42
Oxygen (DIFF)	4.72

Ash Fusion Oxidizing	
Initial	
Softening	
Hemispherical.	
Fluid	

Major Ash Elem. (Ignited @750)	
SiO2	45.46
Al2O3	19.58
TiO2	0.81
Fe2O3	22.63
CaO	4.48
MgO	1.22
Na2O	0.97
K2O	2.14
P2O5	0.25
SO3	3.88
Undetermined	-1.42

Total Moisture

Misc.

Analysis	Value	
Hg	0.11	PPM

Sulfur Forms (Dry)	
Pyritic Sulfur	
Sulfate	
Organic	
Sulfur, Total	3.77

HGI/FSI
HGI
FSI

As Determined Moisture 1.195 %

These values are preliminary and are subject to change.

CONSOL ENERGY

Research and Development
www.consolenergy.com
4000 Brownsville Rd.
South Park, PA 15129

Sample Description.: **ESP HOPPER ASH**
Sample No.: ESP ASH-1A
Date Received: 07/27/2004
Date Completed: 01/06/2005

Analytical No.: **20043582**
Project No.: 1621 -087 -
Submitted By: J. WITHUM

Proximate (Dry)	Wt%
Ash	94.48
Volatile Matter	
Fixed Carbon	
BTU/lb	
MAF BTU/lb	

Ash Fusion Reducing Temp (F)	
Initial	
Softening	
Hemispherical.	
Fluid	

Trace Elements (ppm)	
Hg	0.170
F	

Ultimate (Dry)%	
Carbon	5.05
Hydrogen	
Nitrogen	
Chlorine	7.0112
Sulfur, Total	
Ash	94.48
Oxygen (DIFF)	-6.54

Ash Fusion Oxidizing	
Initial	
Softening	
Hemispherical.	
Fluid	

Major Ash Elem. (Dry)	
SiO2	42.96
Al2O3	18.01
TiO2	0.85
Fe2O3	22.63
CaO	4.36
MgO	1.07
Na2O	0.74
K2O	2.05
P2O5	0.30
SO3	0.88
Undetermined	6.15

Total Moisture

Misc.

Analysis	Value	
Hg	0.17	PPM

Sulfur Forms (Dry)	
Pyritic Sulfur	
Sulfate	
Organic	
Sulfur, Total	

HGI/FSI	
HGI	
FSI	

As Determined Moisture 0.16 %

These values are preliminary and are subject to change.

CONSOLENERGY

Research and Development
www.consolenergy.com
4000 Brownsville Rd.
South Park, PA 15129

Sample Description.: **ESP HOPPER ASH**
Sample No.: ESP ASH-1B
Date Received: 07/27/2004
Date Completed: 01/06/2005

Analytical No.: **20043583**
Project No.: 1621 -087 -
Submitted By: J. WITHUM

Proximate (Dry)	Wt%
Ash	96.68
Volatile Matter	
Fixed Carbon	
BTU/lb	
MAF BTU/lb	

Ash Fusion Reducing Temp (F)
Initial
Softening
Hemispherical.
Fluid

Trace Elements (ppm)	
Hg	0.060
F	

Ultimate (Dry)%	
Carbon	3.04
Hydrogen	
Nitrogen	
Chlorine	
Sulfur, Total	
Ash	96.68
Oxygen (DIFF)	0.28

Ash Fusion Oxidizing
Initial
Softening
Hemispherical.
Fluid

Major Ash Elem. (Dry)	
SiO_2	44.61
Al_2O_3	18.83
TiO_2	0.90
Fe_2O_3	22.25
CaO	4.41
MgO	1.11
Na_2O	0.77
K_2O	2.12
P_2O_5	0.33
SO_3	0.91
Undetermined	3.76

Total Moisture

Misc.

Analysis	Value	
Hg	0.06	PPM

Sulfur Forms (Dry)
Pyritic Sulfur
Sulfate
Organic
Sulfur, Total

HGI/FSI
HGI
FSI

As Determined Moisture 0.15 %

These values are preliminary and are subject to change.

CONSOL ENERGY

Research and Development
www.consolenergy.com
4000 Brownsville Rd.
South Park, PA 15129

Sample Description.: **BAGHOUSE HOPPER ASH TEST #2**
Sample No.: SM4 ASH-2-4A4
Date Received: 08/02/2005
Date Completed:

Analytical No.: **20053484**
Project No.: 1621 -099 -037
Submitted By: SC TSENG

Proximate (Dry)	Wt%
Ash	
Volatile Matter	
Fixed Carbon	
BTU/lb	
MAF BTU/lb	

Ash Fusion Reducing Temp (F)
Initial
Softening
Hemispherical.
Fluid

Trace Elements (ppm)
Hg
F

Ultimate (Dry)%	
Carbon	
Hydrogen	
Nitrogen	
Chlorine	
Sulfur, Total	
Ash	
Oxygen (DIFF)	100.00

Ash Fusion Oxidizing
Initial
Softening
Hemispherical.
Fluid

Major Ash Elem.
SiO_2
Al_2O_3
TiO_2
Fe_2O_3
CaO
MgO
Na_2O
K_2O
P_2O_5
SO_3
Undetermined

Misc.	
Analysis	Value

Total Moisture

Sulfur Forms (Dry)
Pyritic Sulfur
Sulfate
Organic
Sulfur, Total

HGI/FSI
HGI
FSI

As Determined Moisture 0 %

These values are preliminary and are subject to change.

CONSOL ENERGY

Research and Development
www.consolenergy.com
4000 Brownsville Rd.
South Park, PA 15129

Sample Description.: **BAGHOUSE HOPPER ASH TEST #2**

Sample No.: SM4 ASH-2-4A5

Date Received: 08/02/2005

Date Completed:

Analytical No.: **20053485**

Project No.: 1621 -099 -037

Submitted By: SC TSENG

Proximate (Dry)	Wt%
Ash	
Volatile Matter	
Fixed Carbon	
BTU/lb	
MAF BTU/lb	

Ash Fusion Reducing Temp (F)
Initial
Softening
Hemispherical.
Fluid

Trace Elements (ppm)
Hg
F

Ultimate (Dry)%	
Carbon	
Hydrogen	
Nitrogen	
Chlorine	
Sulfur, Total	
Ash	
Oxygen (DIFF)	100.00

Ash Fusion Oxidizing
Initial
Softening
Hemispherical.
Fluid

Major Ash Elem.
SiO_2
Al_2O_3
TiO_2
Fe_2O_3
CaO
MgO
Na_2O
K_2O
P_2O_5
SO_3
Undetermined

Total Moisture

Misc.	
Analysis	Value

Sulfur Forms (Dry)
Pyritic Sulfur
Sulfate
Organic
Sulfur, Total

HGI/FSI
HGI
FSI

As Determined Moisture 0 %

These values are preliminary and are subject to change.

CONSOL ENERGY

Research and Development
www.consolenergy.com
4000 Brownsville Rd.
South Park, PA 15129

Sample Description.: **ESP HOPPER ASH**
Sample No.: ESP ASH-3A
Date Received: 07/27/2004
Date Completed: 01/06/2005

Analytical No.: **20043586**
Project No.: 1621 -087 -
Submitted By: J. WITHUM

Proximate (Dry)	Wt%
Ash	92.36
Volatile Matter	
Fixed Carbon	
BTU/lb	
MAF BTU/lb	

Ash Fusion Reducing Temp (F)
Initial
Softening
Hemispherical.
Fluid

Trace Elements (ppm)	
Hg	0.160
F	

Ultimate (Dry)%	
Carbon	6.37
Hydrogen	
Nitrogen	
Chlorine	5.0060
Sulfur, Total	
Ash	92.36
Oxygen (DIFF)	-3.74

Ash Fusion Oxidizing
Initial
Softening
Hemispherical.
Fluid

Major Ash Elem. (Dry)	
SiO2	40.90
Al2O3	17.41
TiO2	0.83
Fe2O3	23.21
CaO	4.41
MgO	1.12
Na2O	0.88
K2O	1.84
P2O5	0.18
SO3	0.97
Undetermined	8.25

Total Moisture

Misc.

Analysis	Value	
Hg	0.16	PPM

Sulfur Forms (Dry)
Pyritic Sulfur
Sulfate
Organic
Sulfur, Total

HGI/FSI
HGI
FSI

As Determined Moisture 0.12 %

These values are preliminary and are subject to change.

CONSOL ENERGY

Research and Development
www.consolenergy.com
4000 Brownsville Rd.
South Park, PA 15129

Sample Description.: **ESP HOPPER ASH**
Sample No.: ESP ASH-3B
Date Received: 07/27/2004
Date Completed: 01/06/2005

Analytical No.: **20043587**
Project No.: 1621 -087 -
Submitted By: J. WITHUM

Proximate (Dry)	Wt%
Ash	95.19
Volatile Matter	
Fixed Carbon	
BTU/lb	
MAF BTU/lb	

Ash Fusion Reducing Temp (F)
Initial
Softening
Hemispherical.
Fluid

Trace Elements (ppm)	
Hg	0.060
F	

Ultimate (Dry)%	
Carbon	4.11
Hydrogen	
Nitrogen	
Chlorine	
Sulfur, Total	
Ash	95.19
Oxygen (DIFF)	0.70

Ash Fusion Oxidizing
Initial
Softening
Hemispherical.
Fluid

Major Ash Elem. (Dry)	
SiO_2	42.53
Al_2O_3	18.28
TiO_2	0.87
Fe_2O_3	23.03
CaO	4.55
MgO	1.18
Na_2O	0.95
K_2O	1.96
P_2O_5	0.20
SO_3	1.10
Undetermined	5.35

Misc.

Analysis	Value	
Hg	0.06	PPM

Total Moisture

Sulfur Forms (Dry)
Pyritic Sulfur
Sulfate
Organic
Sulfur, Total

HGI/FSI
HGI
FSI

As Determined Moisture 0.12 %

These values are preliminary and are subject to change.

CONSOL ENERGY

Research and Development
www.consolenergy.com
4000 Brownsville Rd.
South Park, PA 15129

Sample Description.: **ESP HOPPER ASH**
Sample No.: ESP ASH-4A
Date Received: 07/27/2004
Date Completed: 01/06/2005

Analytical No.: **20043588**
Project No.: 1621 -087 -
Submitted By: J. WITHUM

Proximate (Dry)	Wt%
Ash	91.51
Volatile Matter	
Fixed Carbon	
BTU/lb	
MAF BTU/lb	

Ash Fusion Reducing Temp (F)	
Initial	
Softening	
Hemispherical.	
Fluid	

Trace Elements (ppm)	
Hg	0.110
F	

Ultimate (Dry)%	
Carbon	7.43
Hydrogen	
Nitrogen	
Chlorine	7.0140
Sulfur, Total	
Ash	91.51
Oxygen (DIFF)	-5.95

Ash Fusion Oxidizing	
Initial	
Softening	
Hemispherical.	
Fluid	

Major Ash Elem. (Dry)	
SiO_2	42.32
Al_2O_3	17.57
TiO_2	0.83
Fe_2O_3	21.61
CaO	4.17
MgO	1.10
Na_2O	0.88
K_2O	2.08
P_2O_5	0.18
SO_3	0.94
Undetermined	8.32

Total Moisture

Misc.

Analysis	Value	
Hg	0.11	PPM

Sulfur Forms (Dry)	
Pyritic Sulfur	
Sulfate	
Organic	
Sulfur, Total	

HGI/FSI	
HGI	
FSI	

As Determined Moisture 0.2 %

These values are preliminary and are subject to change.

CONSOL ENERGY

Research and Development
www.consolenergy.com
4000 Brownsville Rd.
South Park, PA 15129

Sample Description.: **ESP HOPPER ASH**
Sample No.: ESP ASH-4B
Date Received: 07/27/2004
Date Completed: 01/06/2005

Analytical No.: **20043589**
Project No.: 1621 -087 -
Submitted By: J. WITHUM

Proximate (Dry)	Wt%
Ash	93.08
Volatile Matter	
Fixed Carbon	
BTU/lb	
MAF BTU/lb	

Ash Fusion Reducing Temp (F)
Initial
Softening
Hemispherical.
Fluid

Trace Elements (ppm)	
Hg	0.100
F	

Ultimate (Dry)%	
Carbon	5.62
Hydrogen	
Nitrogen	
Chlorine	5.0075
Sulfur, Total	
Ash	93.08
Oxygen (DIFF)	-3.71

Ash Fusion Oxidizing
Initial
Softening
Hemispherical.
Fluid

Major Ash Elem. (Dry)	
SiO_2	42.82
Al_2O_3	17.85
TiO_2	0.86
Fe_2O_3	21.34
CaO	4.34
MgO	1.15
Na_2O	0.86
K_2O	2.01
P_2O_5	0.19
SO_3	0.95
Undetermined	7.63

Total Moisture

Misc.

Analysis	Value	
Hg	0.10	PPM

Sulfur Forms (Dry)
Pyritic Sulfur
Sulfate
Organic
Sulfur, Total

HGI/FSI
HGI
FSI

As Determined Moisture 0.15 %

These values are preliminary and are subject to change.

CONSOL ENERGY INC.
RESEARCH & DEVELOPMENT
ANALYTICAL LABORATORY
SOUTH PARK, PENNSYLVANIA 15129

TO: JAW/SCT/JEL

PROJECT NUMBER 1621-87 -

DATE LOGGED 07/27/04
DATE COMPLETED / /

DESCRIPTION LIME SLURRY LIQUID
COMMENTS TEST 1
SAMPLE NUMBER LIME SLURRY LIQ-1
ANALYTICAL NUMBER 043626

		-------- WATER ANALYSIS ---------		
ANALYSIS	UNITS	VALUE	VALUE	DUP AVG
Calcium		1330		
Total Iron		0.16		
Magnesium		2.30		
Potassium		67.6		
Sodium		90.3		
Ammonia as NH3	ppm	<10		
Chloride		417		
Nitrate as N		<10		
Sulfate		310		
MERCURY	ng/ml	37.5		

Note: All units mg/L unless specified

CONSOL ENERGY INC.
RESEARCH & DEVELOPMENT
ANALYTICAL LABORATORY
SOUTH PARK, PENNSYLVANIA 15129

TO: JAW/SCT/JEL

PROJECT NUMBER 1621-87 -

DATE LOGGED 07/27/04
DATE COMPLETED / /

DESCRIPTION LIME SLURRY LIQUID
COMMENTS TEST 2
SAMPLE NUMBER LIME SLURRY LIQ-2
ANALYTICAL NUMBER 043627

		-------- WATER ANALYSIS ---------		
ANALYSIS	UNITS	VALUE	VALUE	DUP AVG
Calcium		926		
Total Iron		<0.05		
Magnesium		0.36		
Potassium		68.9		
Sodium		94.7		
Ammonia as NH3		<10		
Chloride		292		
Nitrate as N		<10		
Sulfate		450		
MERCURY	ng/ml	17.2		

Note: All units mg/L unless specified

CONSOL ENERGY INC.
RESEARCH & DEVELOPMENT
ANALYTICAL LABORATORY
SOUTH PARK, PENNSYLVANIA 15129

TO: JAW/SCT/JEL

PROJECT NUMBER 1621-87 -

DATE LOGGED 07/27/04
DATE COMPLETED 10/12/04

DESCRIPTION LIME SLURRY LIQUID
COMMENTS TEST 3
SAMPLE NUMBER LIME SLURRY LIQ-3
ANALYTICAL NUMBER 043628

		-------- WATER ANALYSIS ---------		
ANALYSIS	UNITS	VALUE	VALUE	DUP AVG
Calcium		898		
Total Iron		<0.05		
Magnesium		0.40		
Potassium		75.2		
Sodium		102		
Ammonia as NH3	ppm	<10		
Chloride		278		
Nitrate as N		<10		
Sulfate		376		

MERCURY	ng/ml	1.1

Note: All units mg/L unless specified

CONSOL ENERGY INC.
RESEARCH & DEVELOPMENT
ANALYTICAL LABORATORY
SOUTH PARK, PENNSYLVANIA 15129

TO: JAW/SCT/JEL

PROJECT NUMBER 1621-87 -

DATE LOGGED 07/27/04
DATE COMPLETED / /

DESCRIPTION LIME SLURRY LIQUID
COMMENTS TEST 4
SAMPLE NUMBER LIME SLURRY LIQ-4
ANALYTICAL NUMBER 043629

		-------- WATER ANALYSIS ---------		
ANALYSIS	UNITS	VALUE	VALUE	DUP AVG
Calcium		897		
Total Iron		<0.05		
Magnesium		0.31		
Potassium		68.3		
Sodium		94.7		
Ammonia as NH3	ppm	<10		
Chloride		269		
Nitrate as N		<10		
Sulfate		281		
MERCURY	ng/ml	<1.0		

Note: All units mg/L unless specified

CONSOL ENERGY INC.
RESEARCH & DEVELOPMENT
ANALYTICAL LABORATORY
SOUTH PARK, PENNSYLVANIA 15129

TO: JAW/SCT/JEL

PROJECT NUMBER 1621-87 -

DATE LOGGED 07/27/04
DATE COMPLETED / /

DESCRIPTION FGD SLURRY FILTRATE
COMMENTS TEST 1
SAMPLE NUMBER FGDS LIQ-1-1
ANALYTICAL NUMBER 043614

		-------- WATER ANALYSIS ---------		
ANALYSIS	UNITS	VALUE	VALUE	DUP AVG
Calcium		28.2		
Total Iron		0.81		
Magnesium		2790		
Potassium		69.7		
Sodium		69.0		
Ammonia as NH3	ppm	<10		
Chloride		6710		
Nitrate as N		INT		
Sulfate		<0.53		
MERCURY	ng/ml	10.4		

Note: All units mg/L unless specified

CONSOL ENERGY INC.
RESEARCH & DEVELOPMENT
ANALYTICAL LABORATORY
SOUTH PARK, PENNSYLVANIA 15129

TO: JAW/SCT/JEL

PROJECT NUMBER 1621-87 -

DATE LOGGED 07/27/04
DATE COMPLETED / /

DESCRIPTION FGD SLURRY FILTRATE
COMMENTS TEST 1
SAMPLE NUMBER FGDS LIQ-1-2
ANALYTICAL NUMBER 043615

		-------- WATER ANALYSIS ---------		
ANALYSIS	UNITS	VALUE	VALUE	DUP AVG
Calcium		27.7		
Total Iron		0.63		
Magnesium		2810		
Potassium		72.2		
Sodium		71.3		
Ammonia as NH3	ppm	<10		
Chloride		5400		
Nitrate as N		INT		
Sulfate		<0.53		

MERCURY	ng/ml	4.8

Note: All units mg/L unless specified

CONSOL ENERGY INC.
RESEARCH & DEVELOPMENT
ANALYTICAL LABORATORY
SOUTH PARK, PENNSYLVANIA 15129

TO: JAW/SCT/JEL

PROJECT NUMBER 1621-87 -

DATE LOGGED 07/27/04
DATE COMPLETED / /

DESCRIPTION FGD SLURRY FILTRATE
COMMENTS TEST 2
SAMPLE NUMBER FGDS LIQ-2-1
ANALYTICAL NUMBER 043616

		-------- WATER ANALYSIS ---------		
ANALYSIS	UNITS	VALUE	VALUE	DUP AVG
Calcium		28.4		
Total Iron		0.70		
Magnesium		2880		
Potassium		71.1		
Sodium		71.9		
Ammonia as NH3	ppm	<10		
Chloride		5160		
Nitrate as N		<10		
Sulfate		<0.53		
MERCURY	ng/ml	5.5		

Note: All units mg/L unless specified

CONSOL ENERGY INC.
RESEARCH & DEVELOPMENT
ANALYTICAL LABORATORY
SOUTH PARK, PENNSYLVANIA 15129

TO: JAW/SCT/JEL

PROJECT NUMBER 1621-87 -

DATE LOGGED 07/27/04
DATE COMPLETED / /

DESCRIPTION FGD SLURRY FILTRATE
COMMENTS TEST 2
SAMPLE NUMBER FGDS LIQ-2-2
ANALYTICAL NUMBER 043617

		-------- WATER ANALYSIS ---------		
ANALYSIS	UNITS	VALUE	VALUE	DUP AVG
Calcium		29.3		
Total Iron		0.98		
Magnesium		2910		
Potassium		69.5		
Sodium		70.6		
Ammonia as NH3		<10		
Chloride		5090		
Nitrate as N		<10		
Sulfate		<0.53		
MERCURY	ng/ml	5.2		

Note: All units mg/L unless specified

CONSOL ENERGY INC.
RESEARCH & DEVELOPMENT
ANALYTICAL LABORATORY
SOUTH PARK, PENNSYLVANIA 15129

TO: JAW/SCT/JEL

PROJECT NUMBER 1621-87 -

DATE LOGGED 07/27/04
DATE COMPLETED / /

DESCRIPTION FGD SLURRY FILTRATE
COMMENTS TEST 3
SAMPLE NUMBER FGDS LIQ-3-1
ANALYTICAL NUMBER 043618

		-------- WATER ANALYSIS ---------		
ANALYSIS	UNITS	VALUE	VALUE	DUP AVG
Calcium		28.9		
Total Iron		0.96		
Magnesium		2920		
Potassium		67.3		
Sodium		68.3		
Ammonia as NH3		<10		
Chloride		5120		
Nitrate as N		INT		
Sulfate		<0.53		
MERCURY	ng/ml	5.4		

Note: All units mg/L unless specified

CONSOL ENERGY INC.
RESEARCH & DEVELOPMENT
ANALYTICAL LABORATORY
SOUTH PARK, PENNSYLVANIA 15129

TO: JAW/SCT/JEL

PROJECT NUMBER 1621-87 -

DATE LOGGED 07/27/04
DATE COMPLETED / /

DESCRIPTION FGD SLURRY FILTRATE
COMMENTS TEST 3
SAMPLE NUMBER FGDS LIQ-3-2
ANALYTICAL NUMBER 043619

		-------- WATER ANALYSIS ---------		
ANALYSIS	UNITS	VALUE	VALUE	DUP AVG
Calcium		28.4		
Total Iron		0.90		
Magnesium		2870		
Potassium		69.3		
Sodium		70.2		
Ammonia as NH3	ppm	<10		
Chloride		5340		
Nitrate as N		INT		
Sulfate		<0.53		
MERCURY	ng/ml	5.9		

Note: All units mg/L unless specified

CONSOL ENERGY INC.
RESEARCH & DEVELOPMENT
ANALYTICAL LABORATORY
SOUTH PARK, PENNSYLVANIA 15129

TO: JAW/SCT/JEL

PROJECT NUMBER 1621-87 -

DATE LOGGED 07/27/04
DATE COMPLETED / /

DESCRIPTION FGD SLURRY FILTRATE
COMMENTS TEST 4
SAMPLE NUMBER FGDS LIQ-4-1
ANALYTICAL NUMBER 043620

		-------- WATER ANALYSIS ---------		
ANALYSIS	UNITS	VALUE	VALUE	DUP AVG
Calcium		27.5		
Total Iron		0.68		
Magnesium		2880		
Potassium		67.7		
Sodium		70.1		
Ammonia as NH3	ppm	<10		
Chloride		4850		
Nitrate as N		<10		
Sulfate		<0.53		
MERCURY	ng/ml	8.5		

Note: All units mg/L unless specified

CONSOL ENERGY INC.
RESEARCH & DEVELOPMENT
ANALYTICAL LABORATORY
SOUTH PARK, PENNSYLVANIA 15129

TO: JAW/SCT/JEL

PROJECT NUMBER 1621-87 -

DATE LOGGED 07/27/04
DATE COMPLETED / /

DESCRIPTION FGD SLURRY FILTRATE
COMMENTS TEST 4
SAMPLE NUMBER FGDS LIQ-4-2
ANALYTICAL NUMBER 043621

		-------- WATER ANALYSIS ---------		
ANALYSIS	UNITS	VALUE	VALUE	DUP AVG
Calcium		28.4		
Total Iron		0.85		
Magnesium		2880		
Potassium		69.8		
Sodium		71.8		
Ammonia as NH3		<10		
Chloride		5110		
Nitrate as N		<10		
Sulfate		<0.53		
MERCURY	ng/ml	8.8		

Note: All units mg/L unless specified

CONSOL ENERGY INC.
RESEARCH & DEVELOPMENT
ANALYTICAL LABORATORY
SOUTH PARK, PENNSYLVANIA 15129

TO: JAW/SCT/JEL

PROJECT NUMBER 1621-87 -

DATE LOGGED 07/27/04
DATE COMPLETED / /

DESCRIPTION FGD MAKEUP WATER
COMMENTS TEST 1
SAMPLE NUMBER FGD MAKEUP-1
ANALYTICAL NUMBER 043610

		-------- WATER ANALYSIS ---------		
ANALYSIS	UNITS	VALUE	VALUE	DUP AVG
Calcium		41.8		
Total Iron		1.12		
Magnesium		2970		
Potassium		63.1		
Sodium		64.9		
Ammonia as NH3		<10		
Chloride		4430		
Nitrate as N		<10		
Sulfate		<0.53		
MERCURY	ng/ml	<1.0		

Note: All units mg/L unless specified

CONSOL ENERGY INC.
RESEARCH & DEVELOPMENT
ANALYTICAL LABORATORY
SOUTH PARK, PENNSYLVANIA 15129

TO: JAW/SCT/JEL

PROJECT NUMBER 1621-87 -

DATE LOGGED 07/27/04
DATE COMPLETED / /

DESCRIPTION FGD MAKEUP WATER
COMMENTS TEST 2
SAMPLE NUMBER FGD MAKEUP-2
ANALYTICAL NUMBER 043611

		-------- WATER ANALYSIS ---------		
ANALYSIS	UNITS	VALUE	VALUE	DUP AVG
Calcium		39.7		
Total Iron		0.77		
Magnesium		3000		
Potassium		61.2		
Sodium		63.4		
Ammonia as NH3		<10		
Chloride		5390		
Nitrate as N		INT		
Sulfate		<0.53		
MERCURY	ng/ml	2.3		

Note: All units mg/L unless specified

CONSOL ENERGY INC.
RESEARCH & DEVELOPMENT
ANALYTICAL LABORATORY
SOUTH PARK, PENNSYLVANIA 15129

TO: JAW/SCT/JEL

PROJECT NUMBER 1621-87 - DATE LOGGED 07/27/04
DATE COMPLETED / /

DESCRIPTION FGD MAKEUP WATER
COMMENTS TEST 3
SAMPLE NUMBER FGD MAKEUP-3
ANALYTICAL NUMBER 043612

		-------- WATER ANALYSIS ---------		
ANALYSIS	UNITS	VALUE	VALUE	DUP AVG
Calcium		40.3		
Total Iron		0.72		
Magnesium		2930		
Potassium		60.7		
Sodium		63.0		
Ammonia as NH3		<10		
Chloride		4470		
Nitrate as N		INT		
Sulfate		<0.53		
MERCURY	ng/ml	3.8		

Note: All units mg/L unless specified

CONSOL ENERGY INC.
RESEARCH & DEVELOPMENT
ANALYTICAL LABORATORY
SOUTH PARK, PENNSYLVANIA 15129

TO: JAW/SCT/JEL

PROJECT NUMBER 1621-87 -

DATE LOGGED 07/27/04
DATE COMPLETED / /

DESCRIPTION FGD MAKEUP WATER
COMMENTS TEST 4
SAMPLE NUMBER FGD MAKEUP-4
ANALYTICAL NUMBER 043613

		-------- WATER ANALYSIS ---------		
ANALYSIS	UNITS	VALUE	VALUE	DUP AVG
Calcium		38.6		
Total Iron		0.49		
Magnesium		2700		
Potassium		68.1		
Sodium		70.6		
Ammonia as NH3	ppm	<10		
Chloride		4230		
Nitrate as N		INT		
Sulfate		<0.53		
MERCURY	ng/ml	5.4		

Note: All units mg/L unless specified

CONSOL ENERGY INC.
RESEARCH & DEVELOPMENT
ANALYTICAL LABORATORY
SOUTH PARK, PENNSYLVANIA 15129

TO: JAW/SCT/JEL

PROJECT NUMBER 1621-87 -

DATE LOGGED 07/27/04
DATE COMPLETED / /

DESCRIPTION CENTRATE
COMMENTS TEST 1
SAMPLE NUMBER CENTRATE-1
ANALYTICAL NUMBER 043622

		-------- WATER ANALYSIS ---------		
ANALYSIS	UNITS	VALUE	VALUE	DUP AVG
Calcium		118		
Total Iron		0.09		
Magnesium		2360		
Potassium		67.9		
Sodium		77.6		
Ammonia as NH3	ppm	<10		
Chloride		3140		
Nitrate as N		<10		
Sulfate		3130		
MERCURY	ng/ml	<1.0		

Note: All units mg/L unless specified

CONSOL ENERGY INC.
RESEARCH & DEVELOPMENT
ANALYTICAL LABORATORY
SOUTH PARK, PENNSYLVANIA 15129

TO: JAW/SCT/JEL

PROJECT NUMBER 1621-87 -

DATE LOGGED 07/27/04
DATE COMPLETED / /

DESCRIPTION CENTRATE
COMMENTS TEST 2
SAMPLE NUMBER CENTRATE-2
ANALYTICAL NUMBER 043623

		-------- WATER ANALYSIS ---------		
ANALYSIS	UNITS	VALUE	VALUE	DUP AVG
Calcium		121		
Total Iron		<0.05		
Magnesium		2540		
Potassium		70.2		
Sodium		84.6		
Ammonia as NH3	ppm	<10		
Chloride		4400		
Nitrate as N		<10		
Sulfate		3990		
MERCURY	ng/ml	<1.0		

Note: All units mg/L unless specified

CONSOL ENERGY INC.
RESEARCH & DEVELOPMENT
ANALYTICAL LABORATORY
SOUTH PARK, PENNSYLVANIA 15129

TO: JAW/SCT/JEL

PROJECT NUMBER 1621-87 -

DATE LOGGED 07/27/04
DATE COMPLETED / /

DESCRIPTION CENTRATE
COMMENTS TEST 3
SAMPLE NUMBER CENTRATE-3
ANALYTICAL NUMBER 043624

		-------- WATER ANALYSIS ---------		
ANALYSIS	UNITS	VALUE	VALUE	DUP AVG
Calcium		112		
Total Iron		<0.05		
Magnesium		2560		
Potassium		70.9		
Sodium		82.7		
Ammonia as NH3		<10		
Chloride		4350		
Nitrate as N		<10		
Sulfate		4380		
MERCURY	ng/ml	<1.0		

Note: All units mg/L unless specified

CONSOL ENERGY INC.
RESEARCH & DEVELOPMENT
ANALYTICAL LABORATORY
SOUTH PARK, PENNSYLVANIA 15129

TO: JAW/SCT/JEL

PROJECT NUMBER 1621-87 -

DATE LOGGED 07/27/04
DATE COMPLETED 10/12/04

DESCRIPTION CENTRATE
COMMENTS TEST 4
SAMPLE NUMBER CENTRATE-4
ANALYTICAL NUMBER 043625

		-------- WATER ANALYSIS ---------		
ANALYSIS	UNITS	VALUE	VALUE	DUP AVG
Calcium		93.1		
Total Iron		<0.05		
Magnesium		2610		
Potassium		71.0		
Sodium		80.9		
Ammonia as NH3		<10		
Chloride		4390		
Nitrate as N		<10		
Sulfate		4410		
MERCURY	ng/ml	<1.0		

Note: All units mg/L unless specified

CONSOL ENERGY INC.
RESEARCH & DEVELOPMENT
ANALYTICAL LABORATORY
SOUTH PARK, PENNSYLVANIA 15129

TO: JAW/SCT/JEL

PROJECT NUMBER 1621-87 -

DATE LOGGED 07/27/04
DATE COMPLETED 10/12/04

DESCRIPTION BOTTOM ASH LIQUID
COMMENTS TEST 1
SAMPLE NUMBER BOTTOM ASH LIQ-1
ANALYTICAL NUMBER 043606

		-------- WATER ANALYSIS ---------		
ANALYSIS	UNITS	VALUE	VALUE	DUP AVG
Calcium		482		
Total Iron		0.37		
Magnesium		9.89		
Potassium		17.6		
Sodium		141		
Ammonia as NH3	ppm	<10		
Chloride		337		
Nitrate as N		27.8		
Sulfate		1320		
MERCURY	ng/ml	<1.0		

Note: All units mg/L unless specified

CONSOL ENERGY INC.
RESEARCH & DEVELOPMENT
ANALYTICAL LABORATORY
SOUTH PARK, PENNSYLVANIA 15129

TO: JAW/SCT/JEL

PROJECT NUMBER 1621-87 -

DATE LOGGED 07/27/04
DATE COMPLETED / /

DESCRIPTION BOTTOM ASH LIQUID
COMMENTS TEST 2
SAMPLE NUMBER BOTTOM ASH LIQ-2
ANALYTICAL NUMBER 043607

		-------- WATER ANALYSIS ---------		
ANALYSIS	UNITS	VALUE	VALUE	DUP AVG
Calcium		426		
Total Iron		0.37		
Magnesium		72.8		
Potassium		15.0		
Sodium		152		
Ammonia as NH3	ppm	<10		
Chloride		276		
Nitrate as N		<10		
Sulfate		1430		
MERCURY	ng/ml	<1.0		

Note: All units mg/L unless specified

CONSOL ENERGY INC.
RESEARCH & DEVELOPMENT
ANALYTICAL LABORATORY
SOUTH PARK, PENNSYLVANIA 15129

TO: JAW/SCT/JEL

PROJECT NUMBER 1621-87 -

DATE LOGGED 07/27/04
DATE COMPLETED / /

DESCRIPTION BOTTOM ASH LIQUID
COMMENTS TEST 3
SAMPLE NUMBER BOTTOM ASH LIQ-3
ANALYTICAL NUMBER 043608

		-------- WATER ANALYSIS ---------		
ANALYSIS	UNITS	VALUE	VALUE	DUP AVG
Calcium		457		
Total Iron		0.14		
Magnesium		79.9		
Potassium		14.9		
Sodium		153		
Ammonia as NH3		<10		
Chloride		272		
Nitrate as N		<10		
Sulfate		1540		
MERCURY	ng/ml	<1.0		

Note: All units mg/L unless specified

CONSOL ENERGY INC.
RESEARCH & DEVELOPMENT
ANALYTICAL LABORATORY
SOUTH PARK, PENNSYLVANIA 15129

TO: JAW/SCT/JEL

PROJECT NUMBER 1621-87 -

DATE LOGGED 07/27/04
DATE COMPLETED 10/12/04

DESCRIPTION BOTTOM ASH LIQUID
COMMENTS TEST 4
SAMPLE NUMBER BOTTOM ASH LIQ-4
ANALYTICAL NUMBER 043609

		-------- WATER ANALYSIS ---------		
ANALYSIS	UNITS	VALUE	VALUE	DUP AVG
Calcium		428		
Total Iron		0.20		
Magnesium		79.6		
Potassium		14.4		
Sodium		191		
Ammonia as NH3		<10		
Chloride		309		
Nitrate as N		<10		
Sulfate		1480		
MERCURY	ng/ml	<1.0		

Note: All units mg/L unless specified