Pilot Testing of a Membrane System for Post-Combustion CO_2 Capture

K. Amo, R. Baker, B. Firat, Z. He, J. Kaschemekat, T. Merkel, S. Pande, R. Thiagarajan, X. Wei, H. Wijmans, and C. Wildemuth

Membrane Technology and Research, Inc.

2010 NETL CO_2 Capture Technology Meeting
September 16, 2010

Project Overview

Award name: Pilot testing of a membrane system for post-combustion CO_2 capture

Project period: 10/1/10 to 9/30/15

Funding: $15 million DOE; $3.75 million MTR

DOE program manager: Jose Figueroa

Participants: MTR, APS, Babcock & Wilcox, Southern Company (NCCC), EPRI

Project scope: Demonstrate a membrane process to capture 20 tons of CO_2/day (1 MW_e) from a flue gas slipstream of a coal-fired power plant.

Project plan: The key project work organized by budget period is as follows:

- BP1 – Membrane optimization though continued slipstream testing on the Cholla I (1 ton CO_2/day) system
- BP2 – Design and construction of the Cholla II (20 ton/day) system and evaluation of sweep recycle with B&W
- BP3 – Six-month pilot test of Cholla II and comparative economic analysis

Introduction to MTR

MTR designs, manufactures, and sells membrane systems for industrial gas separations

Petrochemicals: Propylene/Nitrogen

Hydrogen (Refinery): H_2/CH_4, CO, CO_2

Natural Gas:

CO_2/CH_4, CH_4/N_2
NGL/CH_4

Customers include: BP, Chevron, Dominion Exploration, Ercros, ExxonMobil, Formosa Plastics, Innovene, Sabic, Sasol, Sinopec, Solvay, and Statoil.

Membrane Technology Basics

- Membranes have to be thin to provide useful fluxes.

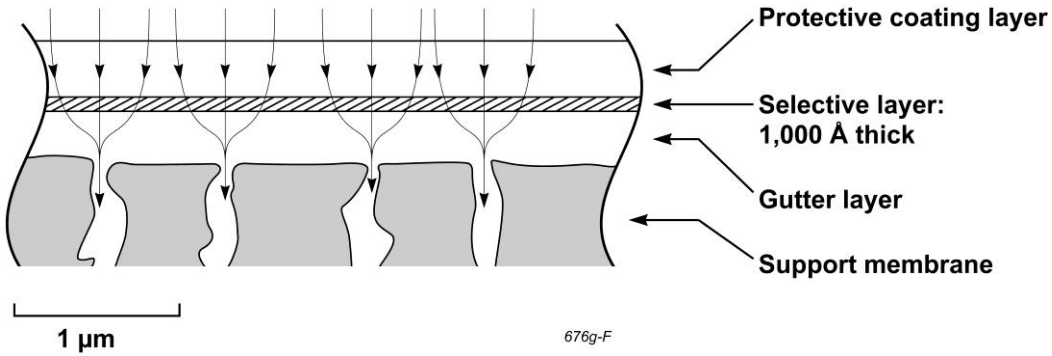

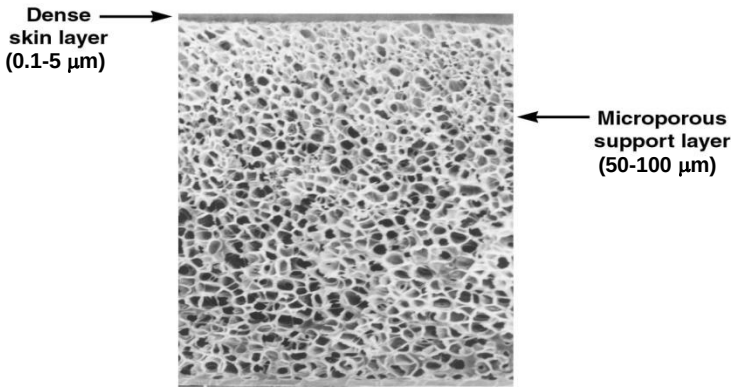

- Spiral-wound modules are used.

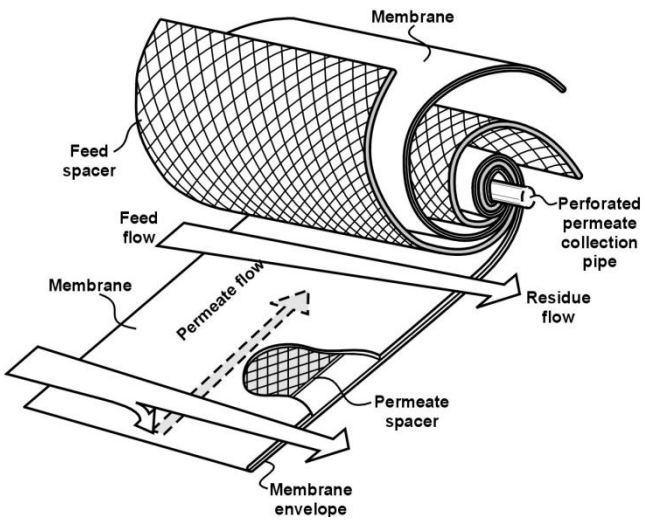

Why a Membrane Process?

- Simple operation; a passive, continuous process
- No use of hazardous chemicals; no chemical handling or disposal issues
- Tolerance to high levels of SO_x and NO_x; inert to oxygen
- Compact and modular; easily scalable; easy turndown
- Inherently energy efficient (~20% parasitic energy at 90% capture)
- No additional water used (recovers water from flue gas)
- No steam use, so no modifications to existing boiler and steam turbine are needed
- Builds on existing, low-cost technology already used at a similar scale for water desalination and natural gas treatment

CO_2 Capture at a Coal-Fired Power Plant

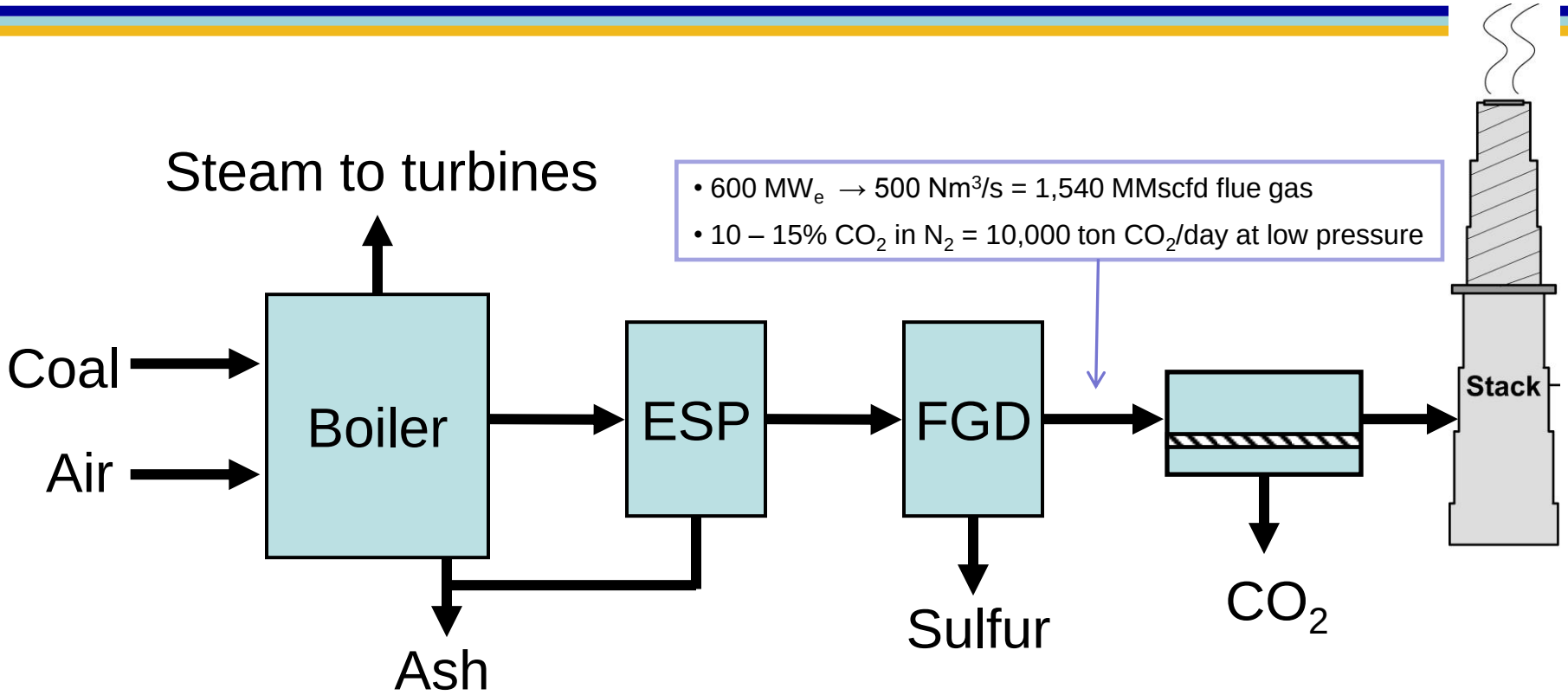

Membrane challenges for treating this large volume of gas include:

- Large membrane area needed → high CO_2 permeance is a must!
- How to generate driving force w/o using large compression or vacuum power?
- Harmful contaminants (fly ash, SO_2, NO_x, water, etc) potentially reduce effectiveness and lifetime.

The MTR CO_2 Capture Process

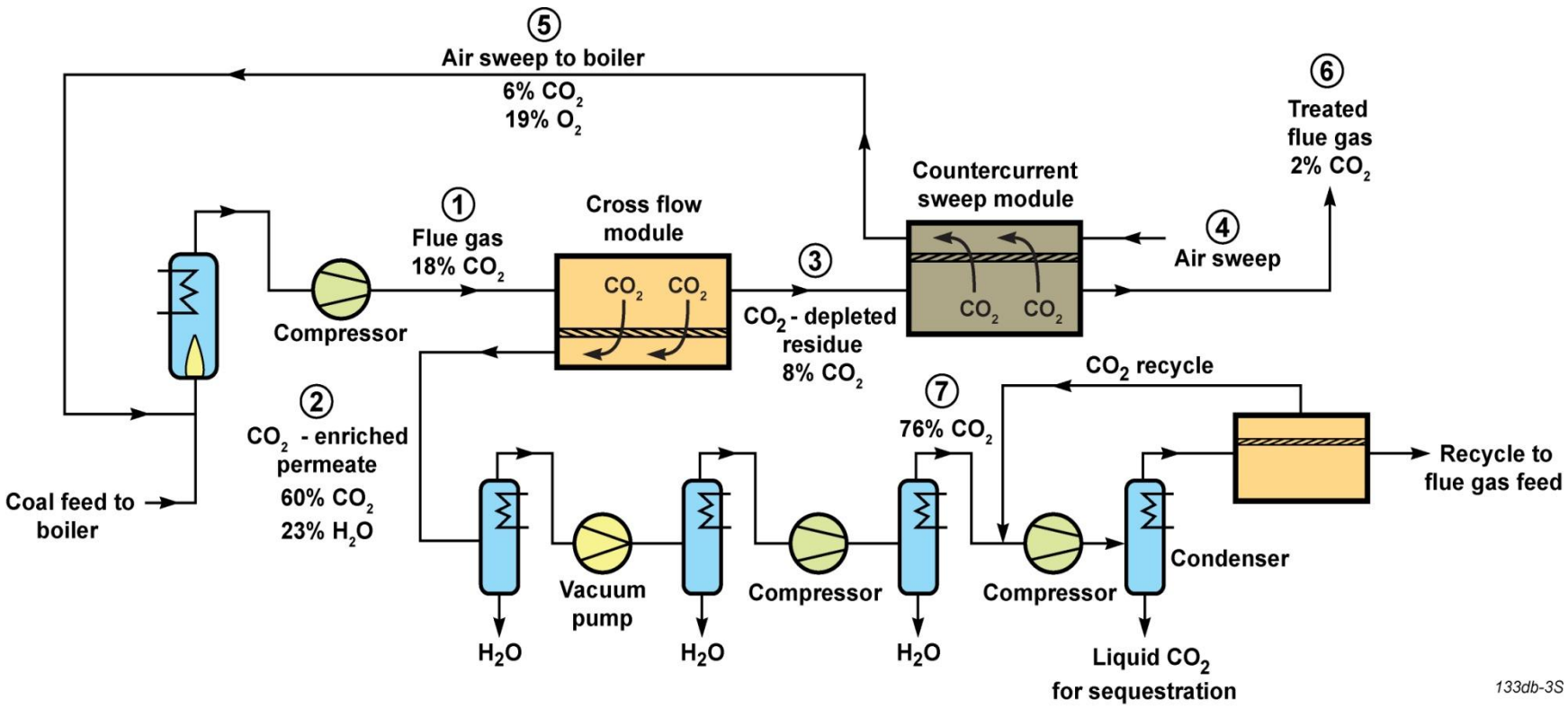

- Countercurrent sweep with combustion air provides “free” driving force that lowers the required energy and reduces membrane area
- Polaris™ membranes are 10X more permeable than conventional membranes
- Process uses ~20% of plant power at 90% capture; 45% increase in LCOE

Field Tests at APS Cholla Power Plant

- A 995 MW PC plant using sub-bituminous coal from the El Segundo mine in New Mexico
- Unit 1 commissioned in 1962; 4 units currently in operation
- MTR Cholla I skid treats post-FGD flue gas from Unit 3

Current Status: Cholla I

- Skid houses 8-inch diameter cross-flow and countercurrent sweep modules
- Designed to capture 1 ton CO_2/day
- Field test started in April 2010

Purpose of test is to:

- Evaluate membrane lifetime in real flue gas
- Demonstrate countercurrent/sweep operation

Cholla II System

Cholla II skid (20 ton CO_2/day or 1 MW_e) will begin operation in early 2013

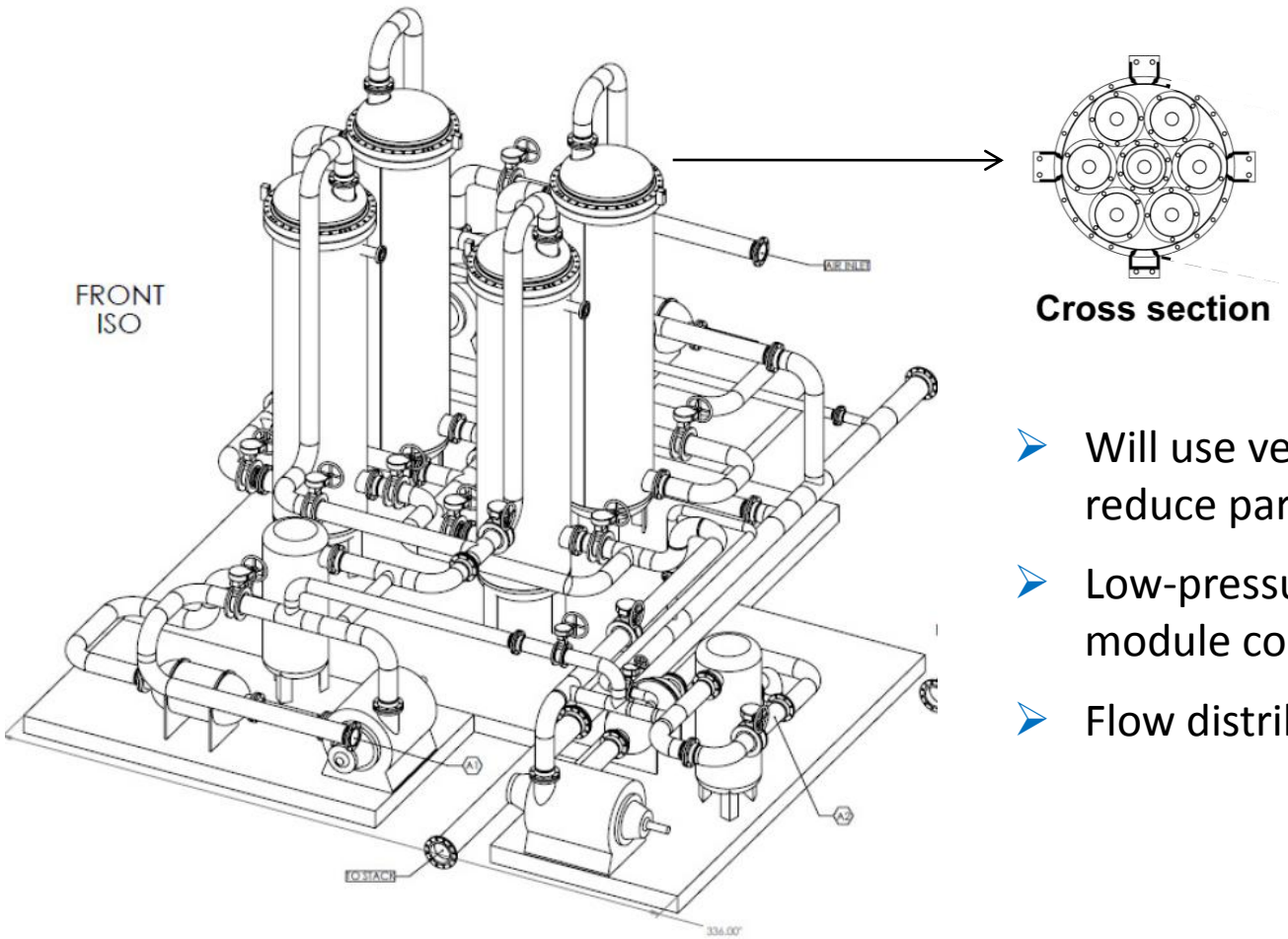

- Will use vertical module bundles to reduce particulate fouling
- Low-pressure housing, piping, and module components to reduce cost
- Flow distribution will be addressed

Cholla II Project Timeline

2010	2011	2012	2013	2014	2015
	BP1	BP2		BP3	

Cholla I (1 ton CO2/day)
- Collaboration with APS and EPRI/WP
- Demo module performance at Cholla test site

Complete a Preliminary Systems and Economic Analysis
- Use performance data from Cholla I

Continue Membrane Optimization at Cholla I
- Improve membrane/module performance
- Investigate low-fouling module geometries
- Cost reduction

Boiler Recycle / Water Recovery Study
- Evaluate CO_2 recycle and plant integration with B&W
- Investigate flue gas water recovery/management with EPRI

Cholla II Demo (20 tons/day)
- Design and build the test system (BP2)
- Install and operate the test system (BP3)
- Analyze results and prepare a comparative systems analysis

Challenges for Membrane Post-Combustion CO_2 Capture

- Impact of particulate matter on membrane life, module life and module pressure drop (Cholla I)
- Integration with power plants and effect of CO_2 recycle on boiler efficiency (Cholla II with B&W)
- Compressor operation and materials challenges (Cholla I and II)
- Cleanup of SO_x and NO_x in CO_2-rich permeate
- Gas flow distribution and pressure drops (Cholla II)
- Water recovery and handling (Cholla II with EPRI)
- Cost reduction and device scale-up issues (Cholla II)

MTR

Membranes Can Approach the DOE Target

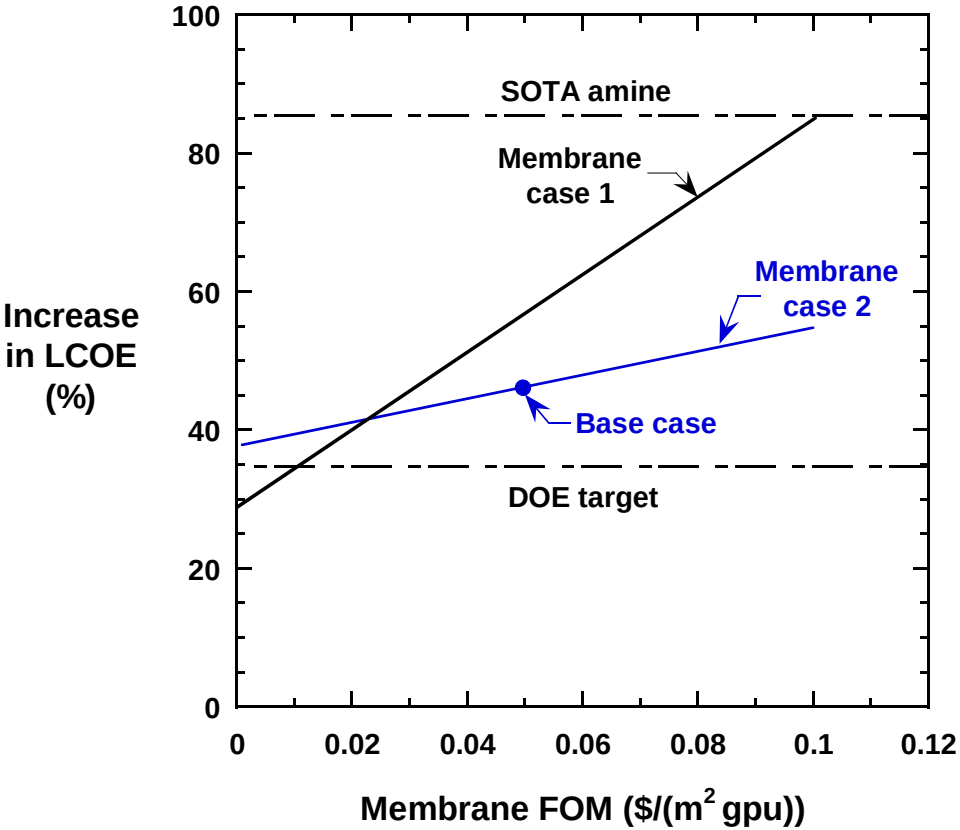

- Case 1: no feed compression/max membrane area; as FOM →0, LCOE increase →30%
- Case 2: 2 bar feed comp/less membrane area; at $25/m^2 1,000 gpu, beats case 1 for LCOE impact
- At $50/m^2 1,000 gpu, sweep design limits LCOE increase to 45%; better than amine, but short of DOE target
- Process design optimization, membrane improvements , and more efficient compression equipment can further reduce LCOE

FOM = Figure of Merit, a permeance and area normalized cost; base case = $50/m^2 at 1,000 gpu
Costs impacting LCOE: Membrane costs as shown in figure, Compression equipment at $500/kW; Project (25%) and process (18%) contingencies per DOE/NETL-401/110907 report.

Very Big Membrane Plants Exist Today

Ashkelon desalination plant

- 40,000 spiral-wound RO membrane modules (Dow Filmtec®)
- 1.5 million m^2 membrane area

Flue gas membrane vessels

- ~100 vessels required for 550 MW plant with current membranes
- Double permeance → halve the vessels

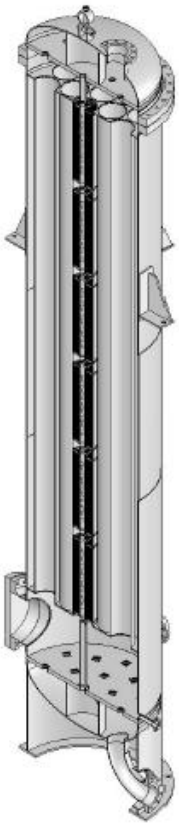

Acknowledgements

- **U.S. Department of Energy, National Energy Technology Laboratory**
  - Jose Figueroa
- **Arizona Public Services**
  - Xiaolei Sun, Ray Hobbs, George Rogers
- **Electric Power Research Institute**
  - Abhoyjit Bhown, Brice Freeman