# PRELIMINARY TECHNICAL AND ECONOMIC FEASIBILITY STUDY ON THE INTEGRATION OF A PROCESS UTILIZING LOW-ENERGY SOLVENTS FOR CARBON DIOXIDE CAPTURE ENABLED BY A COMBINATION OF ENZYMES AND ULTRASONICS WITH A SUBCRITICAL PC POWER PLANT

**TOPICAL REPORT**

**REPORTING PERIOD**
October 1, 2011 – October 31, 2012

**PRINCIPAL AUTHORS:**
Saravanan Swaminathan, Doosan Power Systems, UK
Agnieszka Kuczynska, Scott Hume and Vinay Mulgundmath, Doosan Power Systems, UK
Charles Freeman and Mark Bearden, Pacific Northwest National Laboratory, WA
Joe Remias and Balraj Ambedkar, University of Kentucky, Lexington, KY
Sonja Salmon and Alan House, Novozymes North America, Franklinton, NC

**REPORT ISSUED**
October 2012

**WORK PERFORMED UNDER AWARD NUMBER**
DE-FE0007741 – Task 3

**SUBMITTED BY**
Novozymes North America, Inc.
77 Perry's Chapel Church Road
Franklinton, NC, 27525-0576

**IN COLLABORATION WITH**
Doosan Power Systems Ltd.
Porterfield Road, Renfrew, PA4 8DJ, United Kingdom

Pacific Northwest National Laboratory
902 Battelle Boulevard, Richland, WA 99352

The University of Kentucky Center for Applied Energy Research
2540 Research Park Drive, Lexington, KY 40511

## NOTICES

**COPYRIGHT NOTICE.** Copyright © 2012, Doosan Power Systems Ltd, Pacific Northwest National Laboratory, University of Kentucky Research Foundation, and Novozymes North America, Inc.

This paper was written with support of the U.S. Department of Energy under Contract No. DE-FE0007741. The Government reserves for itself and others acting on its behalf a royalty-free, nonexclusive, irrevocable, worldwide license for Governmental purposes to publish, distribute, translate, duplicate, exhibit, and perform this copyrighted paper

The use in this report of any copyrighted data owned by any of the above parties is authorized pursuant to the relevant contract between such party and Novozymes North America, Inc., relating to the Department of Energy Award Number DE-FE0007741. For such copyrighted data, the copyright owner has granted to the Government, and others acting on its behalf, a paid-up, nonexclusive, irrevocable, worldwide license to reproduce, prepare derivative works, distribute copies to the public, and perform publicly and display publicly, by or on behalf of the Government, for all such data.

**ACKNOWLEDGEMENT OF GOVERNMENT SUPPORT.** This material is based upon work supported by the Department of Energy under Award Number DE-FE0007741.

**DISCLAIMER.** This report was prepared as an account of work sponsored by an agency of the United States Government. Neither the United States Government nor any agency thereof, nor any of their employees, makes any warranty, express or implied, or assumes any legal liability or responsibility for the accuracy, completeness, or usefulness of any information, apparatus, product, or process disclosed, or represents that its use would not infringe privately owned rights. Reference herein to any specific commercial product, process, or service by trade name, trademark, manufacturer, or otherwise does not necessarily constitute or imply its endorsement, recommendation, or favoring by the United States Government or any agency thereof. The views and opinions of authors expressed herein do not necessarily state or reflect those of the United States Government or any agency thereof.

## Abstract

The results of the preliminary techno-economic assessment for integrating a process utilizing low-energy solvents for carbon dioxide ($CO_2$) capture enabled by a combination of enzymes and ultrasonics with a subcritical pulverized coal (PC) power plant are presented. Four cases utilizing the enzyme-activated solvent are compared using different methodologies of regeneration against the DOE/NETL reference MEA case. The results are shown comparing the energy demand for post-combustion $CO_2$ capture and the net higher heating value (HHV) efficiency of the power plant integrated with the post-combustion capture (PCC) plant. A levelized cost of electricity (LCOE) assessment was performed showing the costs of the options presented in the study. The key factors contributing to the reduction of LCOE were identified as enzyme make-up rate and the capability of the ultrasonic regeneration process.

The net efficiency of the integrated PC power plant with $CO_2$ capture changes from 24.9% with the reference Case 10 plant to between 24.34% and 29.97% for the vacuum regeneration options considered, and to between 26.63% and 31.41% for the ultrasonic regeneration options. The evaluation also shows the effect of the critical parameters on the LCOE, with the main variable being the initial estimation of enzyme dosing rate. The LCOE ($/MWh) values range from 112.92 to 125.23 for the vacuum regeneration options and from 108.9 to 117.50 for the ultrasonic regeneration cases considered in comparison to 119.6 for the reference Case 10. A sensitivity analysis of the effect of critical parameters on the LCOE was also performed. The results from the preliminary techno-economic assessment show that the proposed technology can be investigated further with a view to being a viable alternative to conventional $CO_2$ scrubbing technologies.

**TABLE OF CONTENTS**

Abstract ..... 0
Abbreviations ..... 0
List of Exhibits ..... 0
Executive Summary ..... 1
Introduction ..... 2
1.1 Background ..... 2
1.2 Project Overview ..... 2
1.3 Report Objectives ..... 3
2 Description of the Proposed PCC Process ..... 3
2.1 Flue Gas Conditioning ..... 4
*2.1.1 Booster Fan* ..... 4
*2.1.2 Direct Contact Cooler* ..... 4
2.2 The $CO_2$ Removal System ..... 4
*2.2.1 $CO_2$ Absorption Column* ..... 4
*2.2.2 Lean / Rich Heat Exchangers* ..... 7
*2.2.3 $CO_2$ Regeneration Section* ..... 7
*2.2.4 Solvent Heater/Reboiler* ..... 9
*2.2.5 Solvent and Enzyme Reclaimer* ..... 9
*2.2.6 Compression and Dehydration* ..... 10
3 PC Power Plant with $CO_2$ Capture ..... 10
3.1 Brief Process Description ..... 10
3.2 Key System Assumptions ..... 10
4 Evaluation Basis ..... 13
5 Techno-Economic Evaluations ..... 14
5.1 Chemistry and Kinetics ..... 14
5.2 Modelling Approach and Validation ..... 15
5.3 Performance Results ..... 15
5.4 Capital Cost Estimates ..... 16
5.5 Levelized Cost of Electricity ..... 18
5.6 Sensitivity Analysis ..... 20
5.7 Potential Environmental Benefits ..... 21
6 Conclusions and Recommendations ..... 21
Appendices ..... 23
Revision History ..... 23
References ..... 23
Stream Properties around Major Equipment ..... 24
PCC Plant Capital Cost Estimate Breakdown by Area ..... 25
Ultrasonic Energy Demand Assumptions ..... 26

## Abbreviations

AACE – Association for the Advancement of Cost Engineering
BFP – Boiler Feed Water Pump
BP – Budget Period
CCE – Capital Cost Estimator
CCS – Carbon Capture and Storage
DCC – Direct Contact Cooler
DOE – Department of Energy
DPS – Doosan Power Systems Limited
EIA – Energy Information Administration
FEED – Front End Engineering Design
FGD – Flue Gas Desulphurisation
FD Fan– Forced Draught/Draft Fan
HHV – Higher Heating Value
ID Fan – Induced Draught/Draft Fan
LHV – Lower Heating Value
LCOE – Levelized Cost Of Electricity
NETL – National Energy Technology Laboratory
O&M – Operation and Maintenance
PC – Pulverized Coal
PCC – Post Combustion Carbon Capture
PFD – Process Flow Diagram
PNNL – Pacific Northwest National Laboratory
SCR – Selective Catalytic Reduction Reactor
VLP – Very Low Pressure
WWC – Wetted Wall Column

## List of Exhibits

Exhibit 1 Simplified Process Flow Diagram of PCC Plant ..... 6
Exhibit 2 Schematic Diagram of Ultrasonic Regenerator Section ..... 9
Exhibit 3 Block Flow Diagram of a Typical Subcritical PC Power Plant with $CO_2$ Capture and Compression ..... 11
Exhibit 4 Subcritical PC Plant Study Configuration Matrix ..... 12
Exhibit 5 Bituminous Coal Data Illinois No. 6 (Herrin) ..... 12
Exhibit 6 Power Summary ..... 16
Exhibit 7 PCC Equipment Capital Cost Estimates ..... 18
Exhibit 8 Itemized Total Plant Capital Cost ..... 18
Exhibit 9 Annual Operating and Maintenance Expenses ..... 20
Exhibit 10 LCOE Calculations for All Cases ..... 20
Exhibit 11 Sensitivity Analysis of Critical Variables on LCOE ..... 21
Exhibit A-1 Stream Results for the Flue gas Path in the PCC process……..…….24
Exhibit A-2 Stream Results for the Solvent Path in the PCC process……..…….24
Exhibit A-3 Stream Results for the Flue gas Path in the PCC process……..…….25

## Executive Summary

A project team, led by Novozymes North America, Inc. in collaboration with Pacific Northwest National Laboratory, University of Kentucky, and Doosan Power Systems Limited, was awarded DE-FE0007741 to conduct bench-scale tests and a techno-economic assessment of a novel potassium carbonate-based post-combustion capture (PCC) process. Novel aspects of the process include application of an enzyme catalyst (carbonic anhydrase) to promote $CO_2$ absorption in a low enthalpy potassium carbonate-based solvent and incorporating an ultrasonically-enhanced regeneration process to release $CO_2$ under moderate temperature ($\leq$ 70˚C) and pressure (15 psia). These two technologies can work together towards lowering the overall energy requirement of the capture system. Carbonic anhydrase helps overcome $CO_2$ absorption rate limitations of the inherently low regeneration energy aqueous carbonate solvent, while the low energy ultrasonic process increases the driving force for regeneration by forcing dissolved $CO_2$ into gas bubbles at ambient pressure.

This topical report presents the results of the preliminary techno-economic evaluation of the novel enzyme-activated potassium carbonate PCC process using ultrasonically-enhanced regeneration integrated with a subcritical pulverized coal (PC) power plant. It utilizes the DOE/NETL Case 10 study results - Pulverized coal subcritical power plant integrated with Economine FG+ post-combustion carbon capture process published in Cost and Performance Baseline for Fossil Energy Plants Volume 1: Bituminous Coal and Natural Gas to Electricity. The process simulation and modelling was performed using AspenTech's AspenPlus® and project partners' technical know-how of the operation of the individual unit operations in the PCC process. Aspentech's "Capital Cost Evaluator" (CCE®) Parametric Software and recent vendor quotations were utilized to perform the cost estimation of the PCC process.

The techno-economic assessment compares four cases utilizing the novel enzyme-activated solvent with different regeneration approaches (Case 1 – Vacuum regeneration using Low Pressure Steam, Case 2 – Vacuum regeneration using Very Low Pressure Steam, Case 3 – Ultrasonic regeneration using electrical energy and Case 4 – Ultrasonic regeneration using electrical and thermal energy) against the DOE/NETL reference case 10. The results compare the energy demand for post-combustion $CO_2$ capture and the net plant efficiency based on the higher heating value (HHV) of the power plant integrated with the PCC plant. A levelized cost of electricity (LCOE) assessment has also been performed showing the costs of the options presented in the study. Key factors contributing to the reduction of LCOE were indentified as enzyme utilization and the capability of the ultrasonic regeneration process.

The net efficiency of the integrated PC power plant with $CO_2$ capture changes from 24.9% with the reference Case 10 plant to between 24.34% and 29.97% for the vacuum regeneration options, and to between 26.63% and and 31.41% for the ultrasonic regeneration options. The evaluation also shows the effect of the critical parameters on the LCOE, with the main variable being the initial estimation of enzyme dosing rate. The LCOE ($/MWh) values range from 112.92 to 125.23 for the vacuum regeneration options and from 108.9 to 117.50 for the ultrasonic regeneration cases in comparison to 119.6 for the reference Case 10. A sensitivity analysis of the effect of critical parameters on the LCOE was also performed. The results from the preliminary techno-economic assessment show that the proposed technology can be investigated further with a view to being a viable alternative to conventional $CO_2$ scrubbing technologies.

# Introduction

## 1.1 Background

According to the U.S. Department of Energy (DOE) Energy Information Administration's (EIA) International Energy Outlook 2011 [1] Reference Case (which does not include prospective greenhouse gas reduction policies), world coal consumption is predicted to increase by 50 percent by 2035. In the EIA Outlook, total coal consumption for Organization for Economic Cooperation and Development (OECD) countries remains near 2008 levels while coal consumption in non-OECD countries increases at a pace of 2.1 percent per year. As a result, increased use of coal in non-OECD countries accounts for nearly all the growth in world coal consumption over the period. Coal's share of total world energy consumption remains relatively flat throughout the projection, declining slightly from a peak of 29 percent in 2010 to 27 percent in 2015, where it remains through 2035 [1].

Coal use in the United States rises from 22.4 quadrillion Btu in 2008 to 24.3 quadrillion Btu in 2035 in the Reference Case. Although during this period coal's share of total U.S. electricity generation declines from 48 percent in 2008 to 43 percent in 2035 [1], coal power generation remains a very significant share of the global energy mix and, for the foreseeable future, coal will continue to play a critical role in powering the world's electricity generation, especially for base-load power plants.

Even though coal-fired power plants have made significant progress in reducing emissions of sulfur dioxide ($SO_2$), nitrogen oxides ($NO_x$), particulate matter (PM), and recently mercury (Hg) since the passage of the Clean Air Act, carbon dioxide ($CO_2$) emissions controls have not yet been implemented at full-scale at combustion power generation facilities. However, on the near horizon is the possibility for new regulations requiring a reduction in $CO_2$ emissions. Greenhouse gases, such as $CO_2$, have increased over the past century and have been linked to increasing climate disruption. The amount of $CO_2$ produced from the combustion of fossil fuels in the United States will reach 6.3 billion metric tonnes in 2035 according to EIA, with about 36% coming from the coal-fired electric power sector [1].

## 1.2 Project Overview

A project team, led by Novozymes North America, Inc. in collaboration with Pacific Northwest National Laboratory, University of Kentucky, and Doosan Power Systems Limited, was awarded DE-FE0007741 by DOE/NETL to conduct bench-scale tests and a techno-economic assessment of a novel potassium carbonate-based post-combustion capture (PCC) process. Novel aspects of the process include application of an enzyme catalyst (carbonic anhydrase) to promote $CO_2$ absorption in a low enthalpy potassium carbonate-based solvent and incorporating an ultrasonically-enhanced regeneration process to release $CO_2$ under moderate temperature ($\leq 70^{\circ}C$, to prevent thermal degradation of the enzyme) and pressure (15 psia). These two technologies can work together towards lowering the overall energy requirement of the capture system – carbonic anhydrase helps overcome $CO_2$ absorption rate limitations of the aqueous carbonate solvent, while the low energy ultrasonic process increases the driving force for regeneration by forcing dissolved $CO_2$ into gas bubbles at ambient pressure.

### 1.3 Report Objectives

The aim of this report is to present a preliminary techno-economic evaluation of an enzyme-activated potassium carbonate ($K_2CO_3$) solution post-combustion $CO_2$ capture plant using a novel ultrasonic regeneration technology integrated with a subcritical pulverized coal (PC) power plant. Due to the novel nature of the process, the focus of the investigation has been the $CO_2$ capture plant, keeping the rest (boiler and $CO_2$ compression) of the plant identical to the configuration provided in Case 10 of the DOE/NETL 2007 study [2]. Throughout the evaluation, the boiler coal feed rate has been maintained identical to the Case 10 Reference plant. The quantity of steam not used for solvent regeneration has been used in conjunction with an electrical power equivalent [3] to calculate the gross power output from the steam turbine.

This topical report has been prepared in accordance with the DOE requirements, consisting of an executive summary and the following sections: Section 1 provides the introduction to the report, Section 2 provides the process description related to the development of the novel PCC process along with a simplified process flow diagram. Section 3 provides a block flow diagram of an integrated power plant with PCC, with a brief description of the overall process and key assumptions used in the study. Section 4 briefly outlines the evaluation basis used in the study. Section 5 provides detailed results of the preliminary techno-economic assessment and the methodology of calculating the levelized cost of electricity (LCOE). Section 5 also provides the modelling approach, the methodology and comparisons of the specific energy requirements for the current process compared with the Reference Case 10 of the DOE/NETL 2007 study [2].

The performance summary details all elements of auxiliary power consumption along with net plant efficiencies, and also highlights major environmental benefits versus current PCC technology. Using the itemized capital cost estimates and operating duties, a detailed economic analysis was performed and the LCOE was evaluated for each option. The report is completed with concluding remarks emphasizing the benefits of the proposed advanced PCC technology integrated with a large-scale PC power plant, along with identifying key performance parameters for close investigation and validation during the bench-scale work.

## 2 Description of the Proposed PCC Process

The purpose of this section is to provide a description of the proposed PCC technology to allow a good understanding of the main components. Exhibit 1 provides a simplified process flow diagram to describe the flue gas and solvent paths.

The $CO_2$ is drawn from the coal-derived flue gas into an aqueous chemical solvent within the $CO_2$ absorption column leaving 90% $CO_2$-free off-gas which is discharged to the boiler stack. The enzyme accelerates the inter-conversion between dissolved $CO_2$ and bicarbonate ions, which is the rate-limiting step for absorption and desorption in solutions that rely on ionic complexation of $CO_2$. The solvent collected at the bottom of the absorption tower (the $CO_2$-laden solvent, termed ‘rich’ solvent) is then passed to a regeneration section where the $CO_2$ is removed by the application of energy (heat and ultrasonic), and the resultant $CO_2$-lean solvent is returned to the absorption column. The application of ultrasonic energy forces dissolved $CO_2$ into gas bubbles, thereby increasing the overall driving force of the solvent regeneration reaction. Additionally, through ultrasonics, a coupled effect of rectified diffusion is also believed to have the potential to drive dissolved $CO_2$ into gas bubbles at

pressures greater than the equilibrium pressure for $CO_2$ over the solution. The $CO_2$ gas released from the stripping process is then passed to a compression and dehydration system prior to being dispatched for storage. The combination of these synergistic technologies is projected to reduce the net parasitic load on a coal-fired power plant, as compared to conventional MEA scrubbing technology.

## 2.1 Flue Gas Conditioning

### *2.1.1 Booster Fan*

The PCC system requires a booster fan to overcome the pressure drop of the ducting and all components in the flue gas path (Direct Contact Cooler (DCC) and Absorber). The booster fan is designed for continuous stable operation over the full operation range of the flue gas as specified in stream 16 of Exhibit 4-15 of the DOE/NETL 2007 study [2] (see Section 4). The proposed fan is a variable-speed centrifugal type, complete with inlet vane control. The design capacity and static pressure rise are calculated for the design conditions, with a suitable margin added, to ensure that the flue gas is delivered to the PCC plant at the required conditions.

### *2.1.2 Direct Contact Cooler*

Flue gas drawn from the power plant's flue gas desulfurization (FGD) unit is too hot (57°C) to be passed directly to the $CO_2$ absorber. In order to achieve optimal $CO_2$ capture performance, the flue gas temperature entering the $CO_2$ absorption column must be reduced to the optimum conditions of 25 to 30°C, i.e., without additional gas cooling, the PCC $CO_2$ capture efficiency and economic performance would be compromised. The flue gas is passed through the DCC, which is a packed-bed column where flue gas is contacted with re-circulating cooling water flowing in a counter-current arrangement. The arrangement also provides additional gas cleaning capabilities by removing undesirable soluble species.

The cooling water is introduced at the top of the single packed-bed through a liquid distributor system, which avoids splashing or droplet formation while achieving even liquid distribution to all areas of the packing. The column has an internal diameter of approximately 21 meters, with Sulzer-Mellapak 350Y packing. The DCC water system is a closed-loop direct cooling configuration with heat exchanger banks used to reject heat to the power plant's closed-loop cooling water circuit.

The initial fill of the circuit is provided from the process water supply. The DCC unit will generate an excess of water resulting from the condensation of flue gas moisture due to the reduction in flue gas temperature. A proportion of the condensate is utilized by the downstream PCC plant. The water level in the sump at the base of the column is maintained by discharging water to the make-up systems for the $CO_2$ capture process and the mixing vessel. The DCC, therefore, contributes towards maintaining the water balance in the PCC plant.

## 2.2 The $CO_2$ Removal System

### *2.2.1 $CO_2$ Absorption Column*

The absorption column is designed to remove 90% of the $CO_2$ from the flue gas using an enzyme-catalyzed $K_2CO_3$ solvent. In the absorber section, lean solvent solution (i.e. with

a low $CO_2$ content), having been discharged from the regeneration section and reduced to a suitable temperature by cooling, is introduced to the structured packing bed by means of a liquid distribution system which, similar to the DCC unit, avoids splashing/droplet formation and ensures the even flow of the solvent onto the packing material. The cooled flue gas from the DCC unit enters the bottom of the absorber column horizontally through a special gas inlet nozzle to minimize liquid entrainment above the liquid sump before flowing upwards within the column through the packed section.

The solvent solution trickles down by gravity over metal structure packing and comes into contact in a counter-current fashion with the flue gas flowing upwards within the column. The metal structured packing selected will provide sufficient interfacial area, low pressure drop, and minimal overall column size. As the solvent flows down the column, it forms a thin film over the surface area of the structured packing material, allowing maximum gas-liquid interfacial contact within the column. This contact allows both the diffusion of the $CO_2$ into the solvent surface and the reaction between the solvent and the $CO_2$ to take place, capturing the $CO_2$ from the flue gas.

The absorption column is approximately 28 meters in diameter and has 33 meters of packing. It consists of four packed sections in total, consisting of three absorption sections and one wash section. To ensure even distribution throughout the total height of the absorber section, solvent collection and re-distribution between each section of packing material is required. The solvent collected and discharged at the base of the absorption column is termed 'rich solvent' (i.e. has a high $CO_2$ loading). The $CO_2$-rich solvent is pumped by the Rich Solvent Pump via heat exchangers to the regeneration section in order to facilitate solvent regeneration by the application of heat/ultrasonic energy to remove the captured $CO_2$. The overall $CO_2$ capture rate is influenced by the lean loading level of the solvent.

The remaining flue gas passes upwards through a chimney tray into the water wash section where any potential solvent carryover and any impurities are intercepted and removed from the gas stream. Fresh $K_2CO_3$, including make-up enzyme, is introduced upstream of the absorber in the $CO_2$-lean solvent line from the storage tanks.

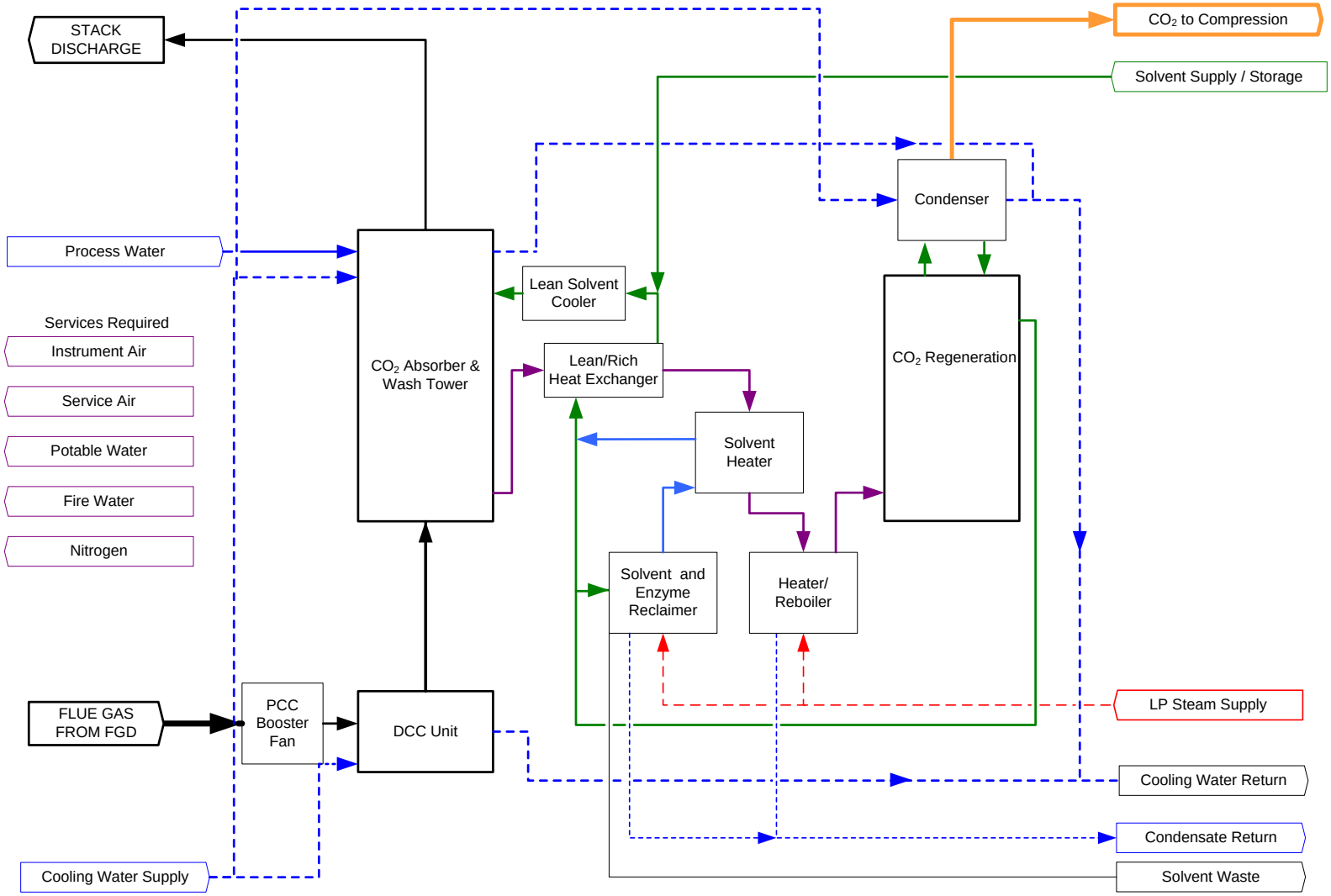


**Exhibit 1 Simplified Process Flow Diagram of PCC Plant**

### *2.2.2 Lean / Rich Heat Exchangers*

The rich solvent stream is passed through the Lean/Rich Heat Exchangers, where heat is recovered from the hot lean solvent leaving the base of the $CO_2$ regeneration section. These heat exchangers use hot $CO_2$-lean solvent solution from the lean solvent header, which is at a temperature of around 70°C, to partially heat the $CO_2$-rich solvent solution leaving the absorption column to approximately 60°C before it enters the regeneration section. The exchange of heat simultaneously cools the lean solvent solution to approximately 50°C and reduces the duty required on the downstream lean solvent cooler. The rich solvent stream is then passed through the regeneration section.

### *2.2.3 $CO_2$ Regeneration Section*

Two solvent regeneration processes have been considered – (i) a traditional stripper column operated under vacuum and (ii) a novel regeneration method using ultrasonic and thermal energy.

#### *2.2.3.1 Vacuum Stripping*

The $CO_2$ absorption by chemical reaction that occurred in the absorption column is reversed by the application of heat within the stripping column. The stripper has a diameter of 24 meters (packing height of 18 meters) and uses an IMTP #70 metal random packing as the contact medium. The $CO_2$-rich solvent from the lean/rich heat exchanger is introduced into the stripper section where it is evenly distributed across the column by means of a liquid distribution system, which ensures even and laminar flow of the solvent onto two packed beds. The packed beds are separated by a liquid collector and redistribution system, which is needed to correct the natural tendency of the liquid to become mal-distributed. Hot vapor generated in the Stripper Reboiler, consisting of predominantly water and released $CO_2$, flows up the stripper section and exchanges heat with the falling rich solvent liquid thereby stripping (releasing) the $CO_2$ as gas and simultaneously regenerating the solvent as it trickles down the packing.

The semi-lean solvent liquid falling from the bottom of the packing is collected by a chimney tray and is passed to the stripper reboiler, where it is heated by condensing steam in a group of plate and frame reboiler units. The reboiler steam has an operating pressure of 167.7 psia, as specified in Statement 3 of the Funding Announcement [3]. The reboiler return pipework delivers the heated two-phase mixture at around 70°C to the stripper below the chimney tray where gravity separates the remaining liquid from the steam and $CO_2$. The steam and $CO_2$ pass through the chimney tray becoming the primary source of thermal energy required for solvent regeneration.

An alternative to using steam from the intermediate-to-low pressure (IP/LP) steam turbine crossover, as in the conventional MEA process, would be the use of low-pressure (and low quality) steam at 8 psia and 85°C. Preliminary performance calculations have been performed for using the steam from a Very Low Pressure (VLP) Turbine in the reboiler, Cases 2 and 4 in Section 5. The VLP steam has a power generating efficiency of 11% compared with the typical 24% in the case of the IP/LP steam. A detailed assessment of the option will be performed as part of the final techno-economic analysis for the project.

*2.2.3.2 Ultrasonic Regeneration*

A design of a novel arrangement to enable $CO_2$ removal from the rich $K_2CO_3$ solvent solution is proposed in this study. For regeneration to be effective in the 70°C temperature range, a driving force in addition to thermal energy must be applied. While a driving force such as pressure swing desorption utilizing vacuum can be technically-effective, the added compression needed on the separated $CO_2$ stream may limit the benefit to overall power consumption. The application of ultrasonic energy as an augmenting driving force to accelerate transport of dissolved $CO_2$ to the gas-phase during solvent regeneration is proposed, offering an improvement in desorption performance at moderate temperatures with little to no need for vacuum. In the absence of ultrasonic excitation, bubble formation and growth ceases once the dissolved $CO_2$ in solution is in equilibrium with the gas phase. However, when excited by ultrasound, continued bubble growth is possible through a mechanism called "rectified diffusion."

In rectified diffusion, small bubbles above a threshold size grow over time, despite not being favored by equilibrium. The growth of the bubble occurs because, as the bubble oscillates in the ultrasound field, the rates of mass transport into the bubble during expansion are higher than the rates of mass transport out of the bubble during compression. The bubble growth stops when it reaches a size where mass transport into and out of the bubble are in equilibrium. The thermal energy and the ultrasonic energy provided to the system cumulatively account for the energy needed to desorb the $CO_2$ from the rich solvent and evaporate the water from the top of the regeneration system.

The rich solvent enters a header (Rich Solvent header) that evenly distributes the liquid to approximately 350 vertical 4" diameter tubes. Ultrasonic transducers are placed around the tubes (i.e non-intrusive to the process), 8 ft from each other on each parallel tube. A hydrocyclone collects the lean solvent at the end of each ultrasonic transducer section and performs the gas-liquid separation. Based on a preliminary assessment, four ultrasonic transducers are placed on each pipe (the total length of the pipe being 32 ft), therefore 1400 hydrocyclones will be required in the regeneration section. While passing through an ultrasonic transducer section, $CO_2$ is desorbed from the solution and flows through a hydrocyclone enabling gas-liquid separation. Desorbed gas is collected in a common header at the top of the regeneration section, from which, the $CO_2$ and moisture can flow to the condenser to remove the bulk of any solvent/water vapor and return it to the solvent circulation system. Lean solvent exiting the regeneration section is collected in a common Lean Solvent Collector. This arrangement minimizes the risk of $CO_2$ re-absorption in the solution. A schematic of the vertical arrangement is shown in Exhibit 2. Alternative arrangements, such as horizontal, are also being considered.

From the Lean Solvent Collector, the regenerated $CO_2$-lean solvent is pumped back through the Lean/Rich Heat Exchanger before being passed through the Lean Solvent Cooler (for temperature control) before being passed to the top of the absorption sections of the Absorption Column to complete the circulation loop. Sufficient footprint has been allowed to leave enough space between each tube for access and repairs.

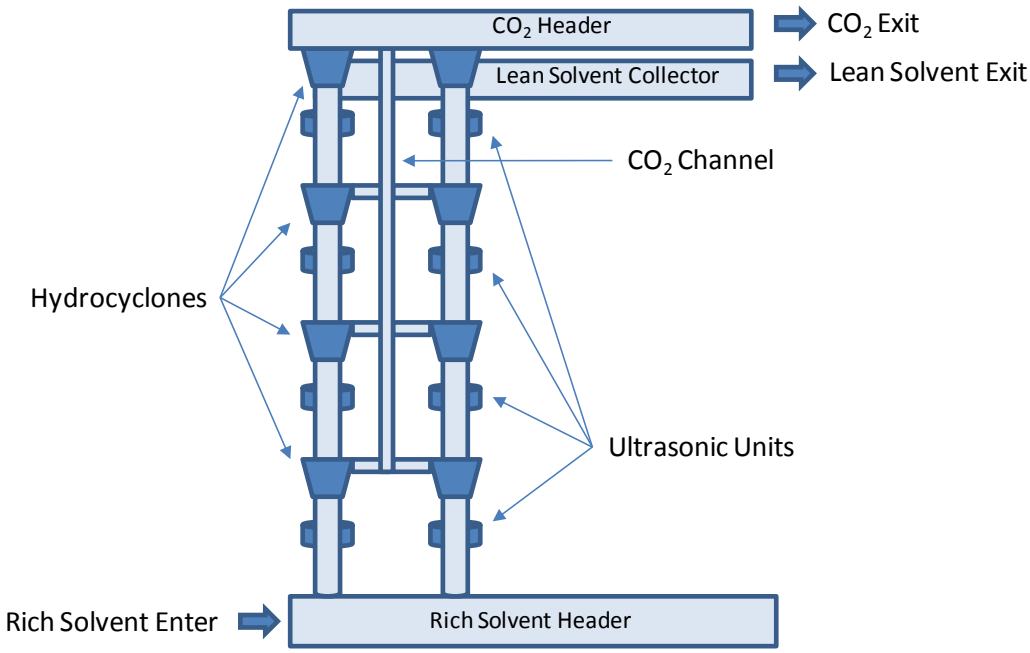


**Exhibit 2 Schematic Diagram of Ultrasonic Regenerator Section**

### *2.2.4 Solvent Heater/Reboiler*

The reboiler is used to generate a hot vapor stream from the $CO_2$-lean solvent that is collected at the bottom of the stripping column. It is a plate-type heat exchanger using attemperated steam from the appropriate superheated steam supply. The solvent feed to the reboiler is pre-heated using the hot enzyme-stripped solvent from the reclaimer. The condensate generated from this indirect heating system is returned to the power plant for recovery in the appropriate condensate system (feed water train in the power plant – see Exhibit 3). In the case of the heater, the cooled solvent is recycled back into the process.

### *2.2.5 Solvent and Enzyme Reclaimer*

In a conventional amine-based absorption/stripping process, in addition to reacting with $CO_2$, the solvent reacts with oxygen and acid gases, such as oxides of sulfur and nitrogen, contained in the flue gas, along with any pipework system corrosion products, to produce degradation products, such as complex salts. The reactions with acid gases and oxygen form heat stable salts (HSS) that cannot be thermally regenerated.

In the proposed process, a $SO_2$ polishing scrubber is not required upstream of the absorption section as the enzyme is not susceptible to degradation by $SO_x$ and $NO_x$. However, these species may nevertheless accumulate in the form of HSS in the system causing undesirable impacts. Conventional methods of removal of these salts from a $K_2CO_3$ system are energy-intensive and would cause the enzyme to degrade thermally, resulting in high enzyme replenishment rates. Also, due to the low temperature regeneration requirement of the proposed process, inclusion of a $SO_2$ polishing scrubber may be the most straightforward approach for prevention of HSS formation. A cost sensitivity study comparing inclusion versus exclusion of a $SO_2$ polishing scrubber will be included in the final techno-economic analysis.

A “cook and filter” approach is adopted in reclaiming a proportion of the ezyme that is inactive. Based on the rate of activity loss due to exposure to higher temperatures, a 0.05% slipstream of the lean solvent is “cooked” at 85°C using low-pressure steam. The increase in temperature coagulates the enzyme in the solvent. The stream is then passed through a filtration system to remove the coagulated enzyme and recirculate the cleaned 20 wt% $K_2CO_3$ solution back into the system. The return solvent stream can be used to heat the rich solvent on its way to the regeneration section. Reclaimer by-product taken from the filtration unit will contain cooked enzyme solids (protein cake). This bio-degradable solid waste product can be used for composting, or as biomass fuel for power generation.

#### *2.2.6 Compression and Dehydration*

In order to meet the input operating conditions for the $CO_2$ compression and dehydration process, an additional single-stage geared compression system needs to be used to achieve the desired downstream $CO_2$ pressure target. In the case of vacuum stripping, the $CO_2$ stream needs to be compressed from 6 psia to 23.5 psia. However, in the case of ultrasonic regeneration, the stream needs to be compressed from 14.7 psia to 23.5 psia. Exhibit 6 provides the power consumption required to perform this unit operation for both options.

# 3 PC Power Plant with $CO_2$ Capture

The study presents a single-reheat 16.6 MPa/566°C/566°C (2,400 psig/1,050°F/1,050°F) subcritical cycle PC power plant integrated with a $CO_2$ capture unit. Brief process highlights and major assumptions used in the study are presented below.

## 3.1 Brief Process Description

Exhibit 3 highlights the major process units and streams of a PC power plant integrated with a PCC unit, as previously described in Section 2. An Illinois No. 6 bituminous coal is combusted in the boiler using wall-fired burners. The flue gas from the boiler, passes through the selective catalytic reduction (SCR) reactor for removal of nitrogen oxides ($NO_x$) and enters the baghouse for fly ash removal. The induced draft (ID) fans drive the flue gas through the FGD for $SO_2$ reduction before it is introduced into the PCC plant. A detailed description of the PCC process has been provided in Section 2.

Low-pressure steam from the IP/LP steam turbine crossover is used for solvent regeneration in the conventional $CO_2$ capture technologies. As mentioned earlier in Sections 2.2.3.1 and 2.2.3.2, an optimized case is also considered where the IP/LP crossover steam is replaced with VLP steam (8 psia and 85°C) for Cases 2 and 4. The detailed study of this scenario has not been performed as part of the preliminary evaluation, however it will be further investigated and presented in the final techno-economic assessment of the proposed technology.

## 3.2 Key System Assumptions

Exhibits 4 and 5 summarize the key system assumptions for the power plant integrated with the PCC process. System key assumptions used in the study are identical to those used in Case 10 of the DOE/NETL 2007 study [2].

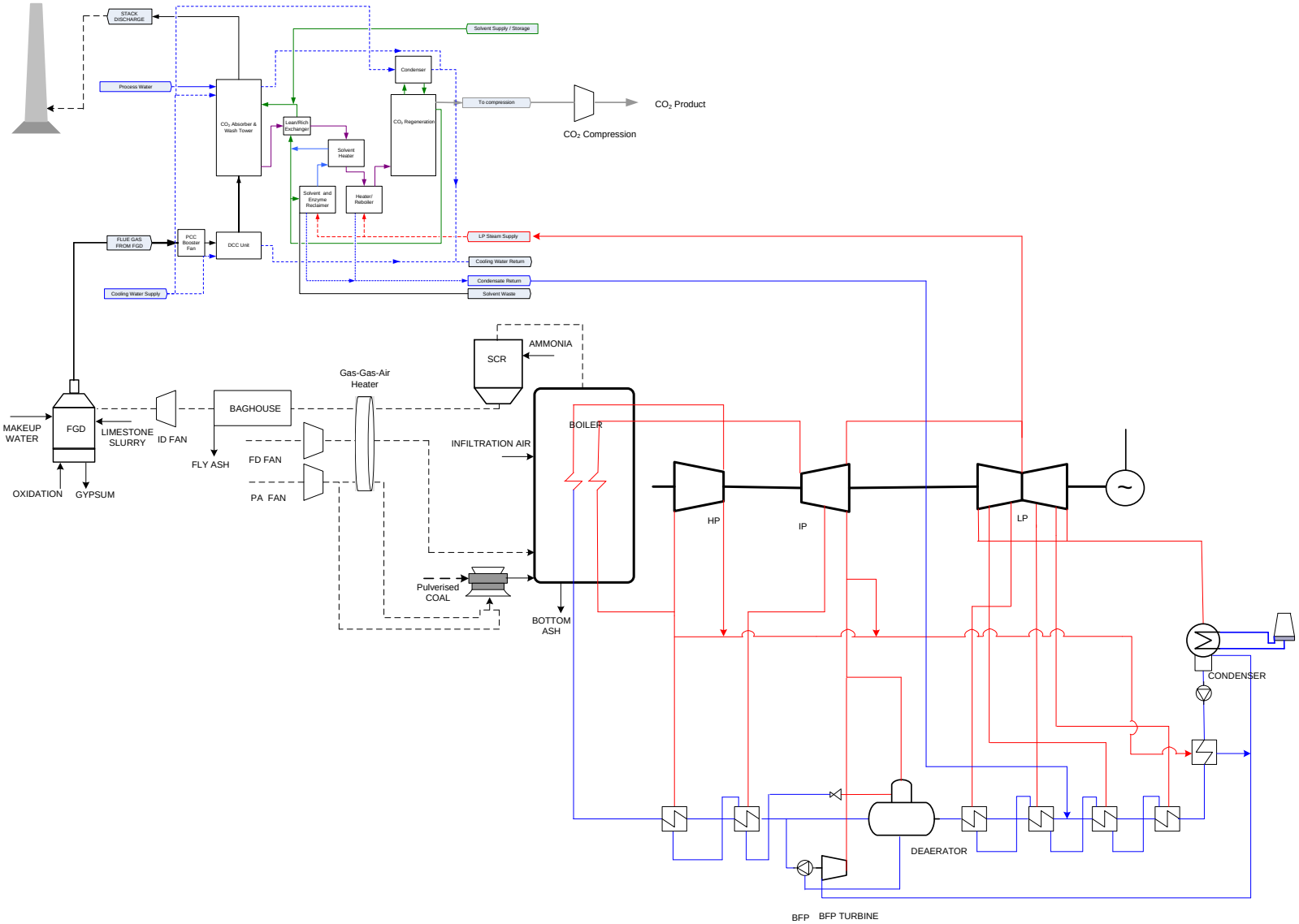


**Exhibit 3 Block Flow Diagram of a Typical Subcritical PC Power Plant with $CO_2$ Capture and Compression**

**Exhibit 4 Subcritical PC Plant Study Configuration Matrix**

| | **Case with $CO_2$ Capture** |
|---|---|
| Steam Cycle, MPa/°C/°C (psig/°F/°F) | 16.5/566/566 (2400/1050/1050) |
| Coal | Illinois No. 6 |
| Condenser pressure, mm Hg (in Hg) | 50.8 (2) |
| Boiler Efficiency, % | 88 |
| Cooling water to condenser, °C (ºF) | 16 (60) |
| Cooling water from condenser, °C (ºF) | 27 (80) |
| $SO_2$ Control | Wet Limestone Forced Oxidation |
| FGD Efficiency, % (A) | 98 (B, C) |
| $NO_x$ Control | LNB w/OFA and SCR |
| SCR Efficiency, % (A) | 86 |
| Ammonia Slip (end of catalyst life), ppmv | 2 |
| Particulate Control | Fabric Filter |
| Fabric Filter efficiency, % (A) | 99.8 |
| Ash Distribution, Fly/Bottom | 80% / 20% |
| Mercury Control | Co-benefit Capture |
| Mercury removal efficiency, % (A) | 90 |
| $CO_2$ Control | $K_2CO_3$ +Enzyme |
| Overall $CO_2$ Capture (A) | 90.01% |
| $CO_2$ Sequestration | Off-site Saline Formation |

**Exhibit 5 Bituminous Coal Data Illinois No. 6 (Herrin)**

| **Proximate Analysis (weight %)**[1] | **As Received** | **Dry** |
|---|---|---|
| Moisture | 11.12 | 0.00 |
| Ash | 9.70 | 10.91 |
| Volatile Matter | 34.99 | 39.37 |
| Fixed Carbon | 44.19 | 49.72 |
| Total | 100.00 | 100.00 |
| | | |
| Sulfur | 2.51 | 2.82 |
| HHV, kJ/kg | 27,113 | 30,506 |
| HHV, Btu/lb | 11,666 | 13,126 |
| LHV, kJ/kg | 26,151 | 29,544 |
| LHV, Btu/lb | 11,252 | 12,712 |

| **Ultimate Analysis (weight %)** | **As Received** | **Dry** |
|---|---|---|
| Moisture | 11.12 | 0.00 |
| Carbon | 63.75 | 71.72 |
| Hydrogen | 4.50 | 5.06 |
| Nitrogen | 1.25 | 1.41 |
| Chlorine | 0.29 | 0.33 |
| Sulfur | 2.51 | 2.82 |
| Ash | 9.70 | 10.91 |
| Oxygen[2] | 6.88 | 7.75 |
| Total | 100.00 | 100.00 |

[1] The proximate analysis assumes sulfur as volatile matter
[2] By difference

# 4 Evaluation Basis

Aspen Plus® software has been used in the study as a tool for modelling the PCC process. The Radfrac module has been utilized for performing detailed rate-based modelling of the $CO_2$ absorption process using a solvent containing $K_2CO_3$ and water. The activation energy of the $CO_2$ hydrolysis reaction has been used as the variable to account for the catalytic activity of the enzyme. Specifically, the activation energy was reduced to achieve mass transfer in the absorber consistent with the mass transfer coefficient values obtained by the University of Kentucky using a Wetted Wall column (WWC). The key process parameters have been used to size equipment, which has then been used to determine the capital costs using CCE® for the PCC process with respect to Reference Case 10 of DOE/NETL Study [2].

List of assumptions:

1. The focal point of the investigation has been to replace the Econamine FG+ block in Exhibit 4-15 of Case 10 of the DOE/NETL Study [2] with the proposed PCC process. The conditions for streams 16 (flue has inlet from the FGD), 19 ($CO_2$ product gas to compression) and 21 (off-gas emissions to the stack) have been set as system boundaries for the preliminary assessment. The amount of LP steam not used in stream 17 has been returned to the LP turbine for power generation.

2. Enzyme loading, makeup rate, and costs were selected based on experimental data and Novozymes' historical internal knowledge. For the preliminary techno-economic assessment, the cost of $K_2CO_3$ was assumed to be $1300/ton (in solid form), with a solvent make-up rate of 0.1 ton/day and enzyme loading of 3 g/L. The above assumptions will be revised, based on bench-scale experimental results, and their effects assessed in the comprehensive final project report.

3. A $SO_2$ polishing scrubber has not been considered as part of this assessment because the enzyme is not susceptible to acid gas degradation at the $SO_x$ and $NO_x$ levels encountered. However, due to the potential for accumulation of HSS, sensitivity cases (with and without a polishing scrubber) will be included in the final techno-economic analysis.

4. An enzyme reclamation methodology has been considered due to enzyme's degradation by exposure to high temperatures.

5. An acoustic (compressor-type) building has been considered for housing the ultrasonic regeneration section due to the high noise levels generated by the ultrasonic transducers.

6. In the ultrasonic regeneration case, process modelling was done by assuming that a sufficiently lean solvent can be obtained from the ultrasonic regeneration section, when provided with the rich solvent from the absorber section. The process conditions and stream properties for the rich and lean solvent entering and exiting the ultrasonic regeneration section were assumed to be identical to the vacuum stripping case. Hence, the $CO_2$ capture auxiliary power consumptions have been shown to be identical for all cases (see Exhibit 6).

7. All the regeneration energy (thermal & electric) provided to the system was transferred into the solvent medium.

8. The process design and economic assumptions in Statement 3 of the FOA [3] have been used unless stated otherwise (specifically, flue gas flow rate was considered at 7,578,830 lb/h as per the system boundary in Exhibit 4-16 [2] from Case 10 of the DOE/NETL 2007 study [2] instead of 5,118,399 lb/h as stated in the FOA [3]).

# 5 Techno-Economic Evaluations

## 5.1 Chemistry and Kinetics

The overall chemical reaction for $CO_2$ absorption in aqueous $K_2CO_3$ solvent is presented as Reaction 1. The conversion of sparingly-soluble $CO_2$ to highly-soluble potassium bicarbonate ($KHCO_3$), which typically is a slow reaction, is accelerated by the presence of carbonic anhydrase enzyme dissolved in the solvent. The reaction reverses in the regeneration section to release $CO_2$ from the solvent.

$$CO_2 + H_2O + K_2CO_3 \leftrightarrow 2KHCO_3 \qquad \text{(Reaction 1)}$$

Equations describing the enzyme-catalyzed carbonate absorption solvent are as follows:

$$CO_{2(g)} \leftrightarrow CO_{2(aq)} \qquad \text{(Reaction 2)}$$

$$CO_{2(aq)} + HO^- \leftrightarrow HCO_3^- \qquad \text{(Reaction 3)}$$

$$HCO_3^- + HO^- \leftrightarrow CO_3^{2-} + H_2O \ \ (\text{pKa} = 10.3) \qquad \text{(Reaction 4)}$$

$$CO_{2(aq)} + H_2O \leftrightarrow H_2CO_3 \qquad \text{(Reaction 5)}$$

$$H_2CO_3 + HO^- \leftrightarrow HCO_3^- + H_2O \ \ (\text{pKa} = 6.4) \qquad \text{(Reaction 6)}$$

$$H_2O \leftrightarrow H^+ + HO^- \qquad \text{(Reaction 7)}$$

For the solvent system in the proposed operating range, Reactions 3 and 5 are responsible for the absorption of $CO_2$ into the liquid phase as bicarbonate. Carbonic anhydrase catalyses Reaction 5, with the additional proton (compared with Reaction 3) rapidly absorbed by the solvent to form bicarbonate. The driving force for the forward reaction of Reactions 3 and 5 is the increased aqueous solubility of bicarbonate compared with $CO_2$.

In order to address the system mass transfer for the proposed enzyme-promoted solvent adequately, it was necessary to provide an absorber column mass transfer coefficient consistent with the proposed enzyme-promoted system. Since mass transfer coefficients were not available for the enzyme-promoted carbonate solvent, it was necessary to determine them for the purpose of modelling the process from the basis of the fundamental reactions and the experimental work conducted as part of the project.

The system mass transfer coefficients were established by reducing the energy of activation of the water hydrolysis reaction, Reaction 5, to achieve the target overall mass transfer coefficient. The target mass transfer coefficient was set at 50% of the value for MEA. This value was established using the overall mass transfer coefficient obtained using WWC experiments at the same temperature and gas flow rates.

## 5.2 Modelling Approach and Validation

A Preliminary techno-economic evaluation has been performed by utilizing Aspen Plus® (including the Radfrac module) software as a generalized computational platform for rigorous calculations of physical and thermodynamic properties of water, steam, and multi-component mixtures, along with related material and energy balances around each unit operation in the $CO_2$ capture system. Aspen Plus® has been used to model the key PCC process parameters, mass and heat transfer rates, as well as the kinetics of complex chemisorption reactions between $CO_2$ and solvent components. The resulting performance parameters of the optimized PCC plant have been used to calculate the power requirements of the process and size the equipment for cost estimation.

Four cases have been considered for solvent regeneration:

1. Case 1: Vacuum Stripping using the LP steam stipulated in Reference 3.
2. Case 2: Optimized Vacuum Stripping using VLP steam at 8 psia.
3. Case 3: Ultrasonic regeneration by the LP steam stipulated in Reference 3.
4. Case 4: Optimised Ultrasonic regeneration using VLP steam at 8 psia.

Unlike the ultrasonic regeneration cases, where the lean and rich solvent boundaries were fixed as per assumption 6 in Section 4, process modelling of the vacuum stripping cases was performed in Aspen Plus® for the entire process (including the regeneration section). Several simulations were performed to reproduce the process conditions in the system boundaries assumed in Section 4. The recirculation pumps in all cases were sized so that the residence time of the solvent in the hot section of the PCC process is as short as possible to minimize thermal degradation of the enzyme. Peformance calculations have been carried out using the simulation tool and the project partners' technical know-how and experience (on other projects) of the individual unit operations of the process. Detailed mass and energy balances and individual stream properties will be provided as part of the final techno-economic assessment. In addition, the entire coal-fired power plant, including the integrated PCC plant, will be modelled and optimized for 550 $MW_e$ net output. Stream properties entering and leaving the major sections of the process are provided in Exhibits A-1 and A-2.

## 5.3 Performance Results

Exhibit 6 shows the power consumption (and generation) summary for the various cases considered in comparison with Case 10 of the 2007 DOE/NETL Study [2]. Note that the unused steam in stream 17 of Exhibit 4-15 [2] was used to calculate the additional gross power that could be generated from the steam turbine using the electric power equivalent provided in Reference 3. Additional steam turbine performance calculations were performed for Cases 2 and 4, to evaluate the power consumption of the PCC process based on extracting steam from a VLP. VLP steam has a power generating efficiency of 11% compared with the typical 24% in the case of the IP/LP crossover steam.

In all the cases, additional compression requirements have been considered to achieve the outlet composition and conditions of stream 19 in Exhibit 4-15, Case 10 of the DOE/NETL Study [2]. Note that Aspen Plus® accounts for all the elements of energy required for vacuum stripping (Cases 1 and 2). However, in the case of ultrasonic regeneration, due to the

thermal energy being supplemented by electrical energy, the regeneration energy was calculated as the sum of the minimum energy required to strip the solvent (based on the heat of $CO_2$ desorption) plus the heat lost due to the evaporation of water. This value represents the theoretical minimum that is required for solvent regeneration. The minimum energy required for reversal of the $CO_2$ absorption reaction is 78.914 $MW_e$, and 59.555 $MW_e$ for the evaporation of water (Case 3). In Case 4, a conservative value of 15$MW_e$ was assumed for ultrasonics, and 123.469$MW_{th}$ for the thermal contribution. A better understanding of the efficiency factor will be obtained from the planned bench-scale testing.

The heat of regeneration for the PCC plant has been calculated in terms of kilograms of $CO_2$ scrubbed per kilowatt-hour of electrical energy that could have been produced. This metric was selected as a means of comparison for all the cases as the stripping steam conditions (and power generating efficiencies of the VLP turbine) are different. The equivalent power consumed by the regeneration section and the additional compression required in each specific case (to meet the $CO_2$ compression input conditions of the system boundary) have been included in the calculations.

**Exhibit 6 Power Summary**

| | NETL_2007 Case 10 | Case 1 | Case 2 | Case 3 | Case 4 |
|---|---|---|---|---|---|
| **GROSS (STEAM TURBINE) POWER, $kW_e$** | **679,923** | **702,321** | **826,695** | **861,695** | **843,695** |
| $CO_2$ Capture System Auxiliaries | 23,500 | 27,798 | 27,798 | 27,798 | 27,798 |
| Vapor Compression | N/A | 30,459 | 30,459 | 791 | 791 |
| Ultrasonic Energy Demand | N/A | N/A | N/A | 138,469 | 15,000 |
| TOTAL AUXILIARIES, $kW_e$ | 130,310 | 165,067 | 165,067 | 273,868 | 150,399 |
| **NET POWER, $kW_e$** | **549,613** | **537,254** | **661,628** | **587,827** | **693,296** |
| Net Plant Efficiency (HHV) | 24.90% | 24.34% | 29.97% | 26.63% | 31.41% |
| Net Plant Heat Rate (Btu/kWh) | 13,724 | 14,040 | 11,401 | 12,832 | 10,880 |
| $CO_2$ Regeneration Energy (kg of $CO_2/kWh_e$) | 3.445 | 3.299 | 9.566 | 4.497 | 18.531 |
| % Improvement over Case 10 [2] | - | - 4.25 | 177.68 | 30.52 | 437.91 |

## 5.4 Capital Cost Estimates

As required by DOE/NETL, capital cost estimates were prepared according to Association for the Advancement of Cost Engineering International (AACE International) Class 5 Estimate guidelines, based on up to 2% project definition, typically used for concept screening purposes. The accuracy of the estimate is defined by the AACE International as having a high range of +30% to +100% and a low range of -20% to -50%. The cost estimation was performed using Aspentech's Capital Cost Evaluator (CCE®) Parametric Software. The basis for the cost estimate is wholly Aspentech's CCE® internal database except for equipment where previous budget cost estimates where available, based on DPS' prior experience. This forms the core of all equipment costs and the derived bulks thereafter (Civils, Steel, EC&I).

Where a novel technology element was encountered, which CCE® cannot estimate, the closest matching process element within CCE® was used and pricing was based on supplier's budget pricing. Therefore, 95% of the cost estimate is based on the parametric estimate model from CCE®, with 5% as supplier budget pricing for novel technologies. No further engineering development has been entered into beyond the basic process model, which has been built separately using Aspen Plus® process modeling software. The cost estimates were

performed based on 1st Quarter 2011 prices and scaled back to 2007 US$ for comparison. A cumulative cost escalation factor of 15% was used for this purpose.

The design basis for the cost estimate is the output from the process modelling software Aspen Plus®. The key equipment components that make up the system were defined and then they and their physical attributes were placed in CCE® for cost estimation. The process is split into 'areas' and CCE® uses the components in each process 'area' to estimate the key quantities of bulks (i.e concrete, steel, electrical, piping) and the direct labor to construct them. Exhibit 7 provides the total capital cost estimate for the PCC plant, including equipment, labor and materials/consumables required during construction. A construction labor rate of $75 per hour was assumed. A 45% contingency was applied to the Bare Erected Cost (20% for process contingency and 25% for the project as specified in Case 10 of the DOE/NETL Study [2]) as shown in Exhibit 7. The contingency values will be revisited, based on data received from the bench-scale testing to perform a more accurate cost estimate for the technology in the final techno-economic assessment.

Due to the benign nature of the solvent, the costs of most of the equipment on the plant have been estimated on the basis of their being manufactured from carbon steel. The packing in the absorber and the regeneration column (Cases 1 and 2) has been assumed to be manufactured from SS304L, based on current knowledge. Guidance has been sought from DPS' materials experts regarding the choice of materials. As per the assumptions mentioned in Section 4, the coal feed rate was fixed and, therefore, the total fuel costs were identical to the Case 10 costs in the DOE/NETL Study [2]. The operating and maintenance costs were calculated using current values as obtained from various suppliers.

The PCC plant cost has been included in the itemized total plant cost estimate provided in Exhibit 8. Item 6A provides the costs of the $CO_2$ capture plant as shown in Exhibit 7. Cases 2 and 4 consider an optimized (and optimistic) scenario of extracting the regeneration steam from the power plant at a lower pressure (8 psia). This was not part of the cost estimates in Case 10 of DOE/NETL Study [2]. To calculate the LCOE for all cases and to provide a reasonably accurate comparison, it was estimated that there will be a 20% increase in the Steam Turbine Generator cost (Item 8 in Exhibit 8) for Cases 2 and 4. The additional costs for Cases 2 and 4 are accounted for as discussed above in line item 8 of Exhibit 8. All the other costs are identical to Case 10 of the DOE/NETL Study [2].

Capital cost estimates for the vacuum regeneration cases (Cases 1 and 2) and the ultrasonic cases (Cases 3 and 4) have been performed and provided in Exhibit 7. Case 10 of DOE/NETL Study [2] estimates do not include an indirect cost during the construction phase of the PCC plant. An indirect cost for consumables, small tools, scaffolding, platforms, equipment rental, field services, temporary construction, utilities etc. has been included in the Exhibit 7 estimates.

**Exhibit 7 PCC Equipment Capital Cost Estimates**

| Total Post Combustion Capture Plant Cost details (Millions of 2007$) | | | | | | | | |
|---|---|---|---|---|---|---|---|---|
| | | | | | | Contingencies | | Total Plant Cost,MM$ |
| | Equip | Labor | Mat/Consumables | Bare Erect. Cost | Eng., CM & Fee Cost | Process | Project | |
| Cases 1 and 2 | 229.821 | 54.947 | 9.212 | 293.982 | 39.164 | 58.796 | 73.495 | 465.439 |
| Cases 3 and 4 | 211.755 | 52.035 | 8.317 | 272.108 | 37.947 | 54.422 | 68.027 | 432.505 |

**Exhibit 8 Itemized Total Plant Capital Cost**

| **Total Plant Cost (MM 2007_$) [2]** | | | | |
|---|---|---|---|---|
| Acct No. | Description | Case 10 - NETL_2007 | Case 1 (Case 2) | Case 3 (Case 4) |
| 1 | Coal & Sorbent Handling | 48.223 | 48.223 | 48.223 |
| 2 | Coal & Sorbent Prep. & Feed | 22.942 | 22.942 | 22.942 |
| 3 | Feedwater & Misc. BOP Systems | 100.377 | 100.377 | 100.377 |
| 4 | PC Boiler | 333.245 | 333.245 | 333.245 |
| 5 | Flue Gas Cleanup | 177.474 | 177.474 | 177.474 |
| 6A | $CO_2$ Removal | 435.391 | 465.439 | 432.505 |
| 6B | $CO_2$ Compression | 49.059 | 49.059 | 49.059 |
| 7 | Ductwork & Stack | 41.551 | 41.551 | 41.551 |
| 8 | Steam Turbine Generator | 125.317 | 125.317 (+20%) | 125.317 (+20%) |
| 9 | Cooling Water System | 65.518 | 65.518 | 65.518 |
| 10 | Ash/Spent Sorbent Handling Sys | 15.515 | 15.515 | 15.515 |
| 11 | Accessory Electric Plant | 76.384 | 76.384 | 76.384 |
| 12 | Instrumentation & Control | 24.056 | 24.056 | 24.056 |
| 13 | Improvements to site | 15.21 | 15.210 | 15.210 |
| 14 | Buildings & Structures | 61.016 | 61.016 | 61.016 |
| | Total Plant Cost without PCC | 1,106.828 | 1,106.828 | 1,106.828 |
| | $CO_2$ removal and Compression Cost | 484.450 | 515.368 | 481.564 |
| | **TOTAL PLANT COST (TPC)** | **1,591.278** | **1,621.326** | **1,588.392** |

## 5.5 Levelized Cost of Electricity

Based on the Summary of Annual Operating and Maintenance Expenses, the cost of electricity levelized (LCOE) over a period of 20 years can be assessed using equation (1) in the DOE/NETL Study [2].

$$LCOE = \frac{(CCF)(TPC) + \sum[(LF_{Fi})(OC_{Fi})] + (CF)\sum[(LF_{Vi})(OC_{Vi})]}{[(CF)(aMWh)]} \quad (1)$$

where

CCF – Capital Charge Factor

TPC – Total Plant Cost

$LF_F$ – Levelization Factor for fixed operating cost

$OC_F$ – Fixed operating cost

$LF_V$ – Levelization Factor for variable operating cost

$OC_V$ – Variable Operating Cost

CF – Plant capacity factor

i – Individual components

The resultant value states the price at which electricity must be generated to breakeven over the lifetime of the project. It includes all costs, including: initial investment, capital costs, operations and maintenance (O&M), and cost of fuel.

The following economic parameters are used for LCOE calculations as per DOE/NETL Study [2]:

Capital Charge Factor (CCF) = 0.1750

Coal Levelization Factor ($LF_F$)= 1.2022

General O&M Levelization Factor ($LF_V$) = 1.1568

The LCOE for a PC power plant with $CO_2$ capture and compression utilizing the proposed novel PCC technology has been calculated using Equation 1, along with the stated values of economic parameters and with unchanged unit cost elements of consumables used in Exhibit 4.24 of the DOE/NETL Study [2]. In order to provide an accurate comparison of the technologies, the costs for the novel solvent and the regeneration scheme have also been included in the calculations. Note that these costs are high as expected for any new technology. The initial chemical costs for charging the system were calculated to be $11,802,280 in comparison to $2,989,571 for Case 10 of the DOE/NETL Study [2]. The annual O&M expenses required to calculate the LCOE have been provided in Exhibit 9. The fixed operating cost and SCR catalyst cost were identical to Case 10 of the DOE/NETL Study [2]. The maintenance material cost was calculated as 5% of the total installed cost as estimated in Case 10 of the DOE/NETL Study [2]. The costs of chemicals, waste disposal, and water were recalculated for the proposed process. The cost of treatment of waste from the enzyme reclaimer was included in the cost estimates as solid waste disposal cost, as stipulated in Statement 3 of the FOA [3]. However, the waste can be sold as fuel for energy from waste plants – this would offset the net operating cost of the PCC plant.

**Exhibit 9 Annual Operating and Maintenance Expenses**

| Annual O&M Expenses for 550 MW PC Power Plant with PCC (2007$) | | | |
|---|---|---|---|
| | Case 10 - NETL_2007 | Case 1 and 2 | Case 3 and 4 |
| **TOTAL FIXED OPERATING COST** | **20,541,525** | **20,541,525** | **20,541,525** |
| Maintenance Material Cost | 15,442,820 | 11,491,085 | 10,587,789 |
| Water | 3,243,688 | 4,249,231 | 4,249,231 |
| Chemicals | 14,976,086 | 26,317,701 | 26,317,701 |
| SCR Catalyst | 1,168,014 | 1,168,014 | 1,168,014 |
| Waste Disposal | 3,454,212 | 4,540,663 | 4,540,663 |
| **TOTAL VARIABLE OPERATING COST** | **38,284,820** | **47,766,694** | **46,863,398** |

The LCOE was calculated for all cases using the capital and O&M costs provided earlier in Exhibits 7-9. Exhibit 10 provides the LCOE values for all the cases investigated. Note that these are the values from a preliminary evaluation and will be used as a starting point for optimization of the technology. The optimized case for ultrasonic regeneration provides the lowest LCOE of all the cases considered. Even though it represents a 68.51% increase in LCOE compared with the PC power plant without PCC, it is anticipated that it can be reduced through better understanding of the technology.

For the proposed PCC process, the critical parameters have been identified as the actual performance of the ultrasonic regeneration process and the cost of the enzyme - specifically, the dosing quantity of the enzyme and its loss of activity at higher temperatures. The next phase of the project will provide an investigation and validation of these concepts and open the horizon for optimization of the process. This would reduce the capital and operating costs of the proposed PCC technology, thereby making it a viable alternative to the conventional amine-based $CO_2$ scrubbing process.

**Exhibit 10 LCOE Calculations for All Cases**

| Summary of Levelized Costs (2007 $/MWh$_e$) | NETL_2007 Case 9 | NETL_2007 Case 10 | Case 1 | Case 2 | Case 3 | Case 4 |
|---|---|---|---|---|---|---|
| Fuel Cost | 20.43 | 30.06 | 30.75 | 24.97 | 28.11 | 23.83 |
| Capital Cost | 34.44 | 68.71 | 70.51 | 67.72 | 67.37 | 65.80 |
| Variable Operating Cost | 5.88 | 10.92 | 13.94 | 11.32 | 12.51 | 10.61 |
| Fixed Operating Cost | 3.89 | 5.86 | 5.99 | 4.867 | 5.47 | 4.64 |
| Transportation, Sequesration & Monitoring (TSM) | - | 4.04 | 4.04 | 4.04 | 4.04 | 4.04 |
| Total | 64.64 | 119.59 | 125.23 | 112.92 | 117.50 | 108.92 |
| Increase versus No Capture | - | 85.04% | 93.78% | 74.72% | 81.79% | 68.51% |

## 5.6 Sensitivity Analysis

In the original proposal narrative submitted to DOE-NETL, it was proposed that a sensitivity analysis of the effects of critical parameters on LCOE be performed. As discussed in the Section 5.4, the identified critical parameters were: 1) enzyme dose requirement and

replenishment rate, and 2) actual performance of the ultrasonic regeneration process. Enzyme dose-response and longevity optimization will be continued in the next phase of the project. A sensitivity analysis on the performance of ultrasonic regeneration, will also be performed during the next phase of the project, based on the experimental data gathered during bench-scale testing.

Case 4 has been selected to show the effects of the critical parameters on LCOE. The following sub-cases have been considered:

1. Case 4a: Dosing of enzyme reduced by an order of magnitude (assuming the cost of the enzyme remains constant).
2. Case 4b: 50% reduced enzyme activity loss with dosing as in Case 4a, leading to lower enzyme make-up rates.
3. Case 4c: 50% decreased ultrasonic energy demand for regeneration.
4. Case 4d: 50% reduction in capital cost of the ultrasonic regenerator.

Exhibit 11 shows the effects of the enzyme dosing cost and the ultrasonic energy demand (and cost) on LCOE. An additional outcome from Case 4a is that the initial chemical cost reduces from $11,802,280 (Section 5.4) to $3,469,322. This also has an effect on the annual O&M cost that, in turn, affects the LCOE. Even though a limited number of sub-cases were considered for the sensitivity analysis, based on the change in the LCOE values it is clear that the critical parameters have been identified. Case 4b provides the lowest LCOE. The effects of multiple parameters will be investigated in the final techno-economic assessment.

**Exhibit 11 Sensitivity Analysis of Critical Variables on LCOE**

| | Case 4 | Case 4a | Case 4b | Case 4c | Case 4d |
|---|---|---|---|---|---|
| LCOE ($/MWh) | 108.915 | 106.39 | 106.25 | 108.7 | 107.9 |
| % increase | 68.5% | 64.6% | 64.4% | 68.3% | 67.0% |

### 5.7 Potential Environmental Benefits

The novel enzyme-activated $K_2CO_3$ PCC process using ultrasonically-enhanced regeneration presents the following potential environmental benefits compared with MEA systems:

1. No solvent vapor emissions and lower solvent chemical hazards.
2. The “cook & filter” waste recovery leading to benign compostable waste or valuable biomass fuel for power generation.
3. Replace hazardous promoters with renewable resourced/biodegradable enzyme.

## 6 Conclusions and Recommendations

A preliminary techno-economic assessment of the novel enzyme-activated $K_2CO_3$ PCC process using ultrasonically-enhanced regeneration, integrated with a subcritical PC power plant was performed. Process simulation using realistic models was performed to predict the

net power plant output and $CO_2$ capture system auxiliary power consumptions. These were compared against published results from Case 10 of the DOE/NETL Study [2] – Economine FG+ post combustion $CO_2$ capture process integrated with a subcritical PC plant.

A comprehensive set of process simulations of different options for post-combustion $CO_2$ capture were performed. The results obtained suggest that the proposed technology can perform more efficiently than Case 10 of the DOE/NETL Study [2]. Even though the auxiliary power consumption is higher than Case 10 of the DOE/NETL Study [2], the unused high quality steam is used to increase the gross power generated by the power plant and other alternatives of using lower quality steam for solvent regeneration have been evaluated. Capital and operating cost estimates have been provided based on the existing knowledge of the equipment and market costs.

Based on the results obtained from the preliminary techno-economic evaluation, it is recommended that the project progress to the next level to perform the bench-scale testing for validation of the technology. The technical and economic challenges identified in this study that will be investigated in the next phases of the project are:

1. Validation of the actual performance of the ultrasonic regeneration technology and its capability to provide the lean solvent composition required by the process.
2. Optimization of the design of the ultrasonic regeneration system, including accounting for all the system heat and pressure losses.
3. Optimization of the dosing quantity of the enzyme and reducing its thermal degradation, to reduce the operating cost.
4. Detailed investigation of the option to utilize a VLP turbine for extracting the solvent regeneration steam at 8 psia (and 85°C).
5. Utilization of alternative materials of construction to reduce the capital cost of plant, such as the use of concrete columns, plastic packing materials, etc.

## Appendices

**Revision History**

| Rev | Description | Date | Released by | Approved by |
|---|---|---|---|---|
| 0 | Initial submission to DOE/NETL | October 1, 2012 | DPS | Novozymes |
| 1 | Submission to DOE/NETL after addressing the comments | October 23, 2012 | DPS | Novozymes |

**References**


[1] International Energy Outlook 2011, Report # DOE/EIA-0484 (2011), September 2011. (http://www.eia.gov/forecasts/ieo/pdf/0484(2011).pdf)

[2] "Cost and Performance Baseline for Fossil Energy Plants – Volume 1: Bituminous Coal and Natural Gas to Electricity", DOE/NETL-2007/1281 Study, Final Report, Rev. 1, (August 2007)

[3] "Bench-Scale and Slipstream Development and Testing of Post-Combustion Carbon Dioxide Capture and Separation Technology for Application to Existing Coal-Fired Power Plants", DE-FOA-0000403, 31st January, 2011.

[4] "Ballast Water Treatment Technology – Current. Status", Lloyds' Register, February 2010. (http://www.lr.org/Images/BWT0210_tcm155-175072.pdf)

## Stream Properties around Major Equipment

**Exhibit A-1 Stream Results for the PCC Process Flue Gas Path**

| | Flue gas inlet[2] | Absorber inlet | Off-gas outlet | $CO_2$ for compression[2] |
|---|---|---|---|---|
| V-L Mole fraction | | | | |
| $N_2$ | 0.6645 | 0.7641 | 0.8713 | 0.0003 |
| $O_2$ | 0.0237 | 0.0273 | 0.0311 | 0.0000 |
| Ar | 0.0079 | 0.0091 | 0.0104 | 0.0000 |
| $CO_2$ | 0.1314 | 0.1511 | 0.0191 | 0.9854 |
| $H_2O$ | 0.1725 | 0.0485 | 0.0682 | 0.0144 |
| $H_2$ | 0.0000 | 0.0000 | 0.0000 | 0.0000 |
| Total | 1.0000 | 1.0000 | 1.0000 | 1.0000 |
| V-L Flow rate (lb/h) | 7,578,830 | 6,956,010 | 5,568,760 | 1,388,770 |
| Temperature (º F) | 135 | 90 | 105 | 69 |
| Pressure (psia) | 14.7 | 16.7 | 15.0 | 23.5 |

**Exhibit A-2 Stream Results for the PCC Process Solvent Path**

| | Absorber inlet | Absorber outlet | Rich solvent to Regen | Lean Solvent from Regen |
|---|---|---|---|---|
| V-L Mass fraction | | | | |
| $CO_2$ | 0.00000 | 0.00005 | 0.00009 | 0.00001 |
| $H_2O$ | 0.71703 | 0.69098 | 0.69100 | 0.71303 |
| $KHCO_3$ | 0.11055 | 0.22898 | 0.22876 | 0.11252 |
| $K_2CO_3$ | 0.17230 | 0.07960 | 0.07975 | 0.17535 |
| Total | 1.00000 | 1.00000 | 1.00000 | 1.00000 |
| V-L Flow rate (lb/h) | 61,165,100 | 62,482,000 | 62,482,000 | 60,087,800 |
| Temperature (º F) | 90 | 105 | 158 | 156 |
| Pressure (psia) | 15.0 | 15.0 | 8 | 8 |
| pH | 9.6 | 8.9 | 8.9 | 9.6 |

**PCC Plant Capital Cost Estimate Breakdown by Area**

The PCC process has been divided into the five main areas outlined below and the cost estimate has been provided for each area. Exhibit A-3 provides the costs of the equipment for each of the cases, including the labor for installation, and other costs, such as piping, civils, steel work, instrumentation, electrical, insulation, etc.

**Area Notation:**

0100 – Booster fan, oil and air filters, dampers and spares.
0200 – DCC, DCC cooler, recirculation pumps, filters and spares.
0300 – Absorber column, lean solvent cooler, rich solvent pumps, lean/rich heat exchangers and spares.
0400 – Lean solvent pumps, surge tank, mixing vessel, solvent storage tanks, filters, reclamation equipment, solvent preheater and spares.
0500 – Regeneration components (stripper column/ultrasonic regeneration section), condensers, flash tanks, pumps, compression and dehydration equipment and spares.

**Exhibit A-3 Capital Cost Estimate Breakdown by Area in Millions of 2007$**

| Area | Vacuum Stripping | | Ultrasonic Regeneration | |
|---|---|---|---|---|
| | Equipment | Other | Equipment | Other |
| 0100 | 1.684 | 1.008 | 1.684 | 1.045 |
| 0200 | 12.818 | 7.667 | 12.818 | 7.955 |
| 0300 | 106.399 | 63.641 | 106.399 | 66.036 |
| 0400 | 8.798 | 5.263 | 8.798 | 5.461 |
| 0500 | 48.489 | 29.003 | 37.144 | 16.449 |
| Consumables | 9.212 | | 8.317 | |
| **Total** | 293.982 | | 272.108 | |

**Ultrasonic Energy Demand Assumptions**

PNNL batch laboratory testing showed the release of $CO_2$ from a loaded 20 wt% $K_2CO_3$ solution using ultrasonic energy. The type of ultrasonic horn used in the batch testing was for laboratory demonstration purposes only and not representative of a commercial-scale energy efficient system. Further, the batch system was not optimized for stripping the evolved $CO_2$ as it formed, resulting in a significant amount of re-absorption. Nevertheless, using both the ultrasonic power input and $CO_2$ evolution from the batch tests, an electricity demand of 10.3 kJ/mol of $CO_2$ was calculated. Aspen Plus® simulations for $K_2CO_3$ solvent with vacuum stripping, within the operating condition constraints, predicted solvent recirculation rates of approximately 60 MM lb/h, and a normalized $CO_2$ removal rate of 0.021 lb $CO_2$/lb recirculated solvent. Based on this metric, the "scaled-up" batch laboratory energy demand is 4.9 J/g of solvent, and a total electric parasitic power load of 37 $MW_e$ for application of the ultrasonic regeneration system to Case 10 of the DOE/NETL Study [2].

In order to project a more accurate estimate of commercial ultrasonic energy demand, several literature sources were reviewed. One of the most developed applications for liquid treatment using ultrasonic energy is water sterilization. A comprehensive reference of ship ballast water gives ranges of both energy and capital costs for large-scale ultrasonic waste treatment systems. The normalized energies for that application ranged from 0.24 to 0.79 J/g of water [4]. Using a conservative assembly of commercial sonication devices, the power estimate for the proposed degassing system is 1.5 J/g of solvent, which is twice that of the maximum value for ship ballast water treatment and a third of that demonstrated in the batch ultrasonic system. This normalized energy parameter is recommended for use in large-scale electricity projections for ultrasonic regeneration, and equates to just over 11 $MW_e$ of parasitic power for the ultrasonic system applied to Case 10 of the DOE/NETL Study [2].