PRELIMINARY CARBON DIOXIDE CAPTURE TECHNICAL AND ECONOMIC FEASIBILITY STUDY

SUBMITTED TO

U.S. Department of Energy
National Energy Technology Laboratory

SUBMITTED UNDER FUNDING OPPORTUNITY ANNOUNCEMENT

DE-FOA-0000403

EVALUATION OF CARBON DIOXIDE CAPTURE FROM EXISTING COAL FIRED PLANTS BY HYBRID SORPTION USING SOLID SORBENTS

PRINCIPAL INVESTIGATOR
Steven A. Benson, Ph.D.
Phone: 701-777-5177
Fax: (701)777-3773
steve.benson@engr.und.edu

November 30, 2012

DUNS # 10-228-0781

SUBMITTED BY

Institute for Energy Studies
College of Engineering and Mines
University of North Dakota
243 Centennial Drive Stop 8153
Upson II Room 366
Grand Forks, ND 58203

WORK PERFORMED UNDER AGREEMENT

DE-FE0007603

Signature of Submitting Official: _____

Steven A. Benson, Ph.D.

University of North Dakota–Department of Energy Preliminary Carbon Dioxide Capture Technical and Economic Feasibility Study

EVALUATION OF CARBON DIOXIDE CAPTURE FROM EXISTING COAL-FIRED PLANTS BY HYBRID SORPTION USING SOLID SORBENTS

Prepared for
Institute for Energy Studies
University of North Dakota

Date

November 30, 2012

University of North Dakota–Department of Energy Preliminary Carbon Dioxide Capture Technical and Economic Feasibility Study

EVALUATION OF CARBON DIOXIDE CAPTURE FROM EXISTING COAL-FIRED PLANTS BY HYBRID SORPTION USING SOLID SORBENTS

Prepared for
Institute for Energy Studies
University of North Dakota

Date

November 30, 2012

BARR

4700 West 77th Street
Minneapolis, MN 55435-4803
Phone: (952) 832-2600
Fax: (952) 832-2601

University of North Dakota–Department of Energy Preliminary Carbon Dioxide Capture Technical and Economic Feasibility Study November 30, 2012

Table of Contents

1.0 Executive Summary 1

1.1 Introduction 1
1.2 Key Finding—ASPEN Model Review 3
1.3 Key Finding—Design Basis 3
1.4 Key Finding—Major Equipment 3
1.5 Key Finding—Heat Balance 4
1.6 Key Finding—Capital Cost 5
1.7 Key Finding—Operation and Maintenance Cost 5
1.8 Key Finding—Levelized Cost of Electricity 6
1.9 Key Finding—Cost of CO_2 Capture 7
1.10 Key Finding—Sensitivity Case 8
1.11 Key Finding—550 MW Net Output Sensitivity Case 8
1.12 Key Finding—Zero Value Sorbent Sensitivity Case 10

2.0 Aspen Model Review 12

2.1 Aspen Model Review 12

3.0 Design Basis 14

3.1 Carbon Capture Design Basis 14
3.1.1 Sorbent Selection and Formulation 14
3.1.2 Detailed Process Description 14
3.1.3 Process Modeling and Equipment Design 15
3.2 Major Equipment 15
3.2.1 Account 5—Flue Gas Cleanup 15
3.2.2 Account 6—Sorbent Regeneration 16
3.2.3 Account 7—Preconditioning and CO_2 Compression Train 16
3.2.4 Account 8—Sorbent Handling 16
3.2.5 Account 9—Waste-Sorbent Recovery and Handling 16
3.2.6 Account 10—Balance-of-Plant Equipment 17
3.2.7 Account 11—Electrical 17
3.2.8 Account 12—Instrumentation and Controls 17
3.3 General Arrangement 17

4.0 Major Equipment List 19

4.1 Major Equipment List 19
4.1.1 Account 5—Flue Gas Cleanup 19
4.1.2 Account 6—Sorbent Regeneration 19
4.1.3 Account 7—Preconditioning and CO_2 Compression Train 20
4.1.4 Account 8—Sorbent Handling 20
4.1.5 Account 9—Waste Sorbent Recovery and Handling 20
5.0 Heat Balance 22
5.1 Heat Balance Analysis 22
5.1.1 Overview 22
5.1.2 CACHYS™ Process Requirements 22
5.1.3 CACHYS™ Auxiliary Power Requirements 23
5.1.4 Plant Performance Summary 23
6.0 Capital Cost Estimate 26
6.1 Qualification of Estimated Cost 26
6.2 Estimate Type 26
6.3 Cost Breakdown 27
6.4 Cost Estimate Methodology 28
6.5 Quantities and Allowances 29
6.6 Contingency 30
6.6.1 Process Contingency 31
6.6.2 Project Contingency 31
6.7 Capital Cost Summary 32
7.0 Operating Cost Estimate 33
7.1 Overview 33
7.2 O&M Cost Summary 34
8.0 Levelized Cost of Electricity and Cost of CO_2 Capture 35
8.1 Overview 35
8.2 Parasitic Power Losses 35
8.3 Levelized Cost of Electricity and Steam 36
8.4 Cost of Carbon Dioxide Capture ($/ton) 36
8.5 Pulverized Coal Plant Efficiency 37
9.0 Sensitivity Cases 38
9.1 Sensitivity Cases 38

List of Tables

Table 1.1 Thermal Performance Summary
Table 1.2 O&M Cost Summary
Table 1.3 Cost Comparison Summary
Table 1.4 Cost of CO_2 Capture Summary
Table 1.5 Sensitivity Case Summary
Table 1.6 LCOE Summary
Table 1.7 Cost of CO_2 Capture Summary (550 MW Net Output Sensitivity Case)
Table 1.8 Cost of CO_2 Capture Summary Base Case (with Zero Value Spent Sorbent)
Table 1.9 Cost of CO_2 Capture Summary 550 MW Case (with Zero Value Spent Sorbent)

Table 4.1 Account 5—Flue-Gas Cleanup
Table 4.1 Account 6—Sorbent Regeneration
Table 4.1 Account 7—Preconditioning and CO_2 Compression Train
Table 4.1 Account 8—Sorbent Handling
Table 4.1 Account 9—Waste-Sorbent Recovery and Handling

Table 5.1 CACHYS™ Heat Duty Summary
Table 5.2 CACHYS™ Steam Supply Summary
Table 5.3 Auxiliary Power Summary
Table 5.4 Plant Performance Summary

Table 6.1 AACE Generic Cost Estimate Classification Matrix
Table 6.2 Exhibit 2-3 AACE Guidelines for Process Contingency
Table 6.3 CACHYS™ System Capital Cost Summary

Table 7.1 O&M Cost Summary

Table 8.1 Parasitic Power Losses
Table 8.2 Levelized Cost of Electricity and Steam
Table 8.3 Cost of CO_2 Capture Summary
Table 8.4 Plant Efficiency Summary

Table 9.1 Plant Efficiency Summary

List of Exhibits

Exhibit A: Process Flow Diagram
Exhibit B: Levelized Cost of Electricity
Exhibit C: Capital Cost Estimate
Exhibit D: Sensitivity Case Calculations
Exhibit E: Supporting Calculations for 550 MW Net Output Sensitivity Case and Zero Value

Sorbent Sensitivity Case List of Acronyms and Abbreviations

AACE: Association for the Advancement of Cost Engineering International

Barr: Barr Engineering Co.

BEC: Bare erected cost (equipment, on-site facilities, infrastructure, labor)

BOP: Balance of plant

Btu/kWh: British thermal unit per kilowatt hour

CACHYS™: Capture from Existing Coal-Fired Plants by Hybrid Sorption Using Solid Sorbents Capture

CO_2: Carbon dioxide

DCS: Distributed control system

DOE: Department of Energy

Envergex: Envergex LLC

EPC: Engineering, procurement, and construction

EPCM: Engineering, procurement, and construction management

^{o}F: Fahrenheit

FGD: Flue-gas desulfurization

FOA: Federal Opportunity Announcement

FT: Feet

HHV: Higher heating value

HP: High pressure

Hp: Horsepower

IEP: Independent Energy Producers

IES: Institute for Energy Studies

IP: Intermediate pressure

kW: Kilowatt

LB/HR: Pound per hour

LCOE: Levelized cost of electricity

LP: Low pressure

Mills/kWh: mills per kilowatt-hour

MMBtu/hr: Million British thermal units per hour

MVA: Megavolt amperes

MW: Megawatt

MW_e: Megawatt electrical

O&M: Operation and maintenance

OEM: Original equipment manufacturer

PC: Pulverized coal

PFD: Process flow diagram

PSIA: Pounds per square inch absolute

SCR: Selective catalytic reduction

Solex: Solex Thermal Science

Ton/hr: Ton per hour

TPC: Total plant cost

UND: University of North Dakota

$/kW: Dollar per kilowatt

$/ton: Dollar per ton

$/yr: Dollar per year

1.0 Executive Summary

1.1 Introduction

Barr Engineering Co. was retained by the Institute for Energy Studies (IES) at University of North Dakota (UND) to conduct a technical and economic feasibility analysis of an innovative hybrid sorbent technology (CACHYS™) for carbon dioxide (CO_2) capture and separation from coal combustion–derived flue gas.

The project team for this effort consists of the University of North Dakota, Envergex LLC, Barr Engineering Co., and Solex Thermal Science, along with industrial support from Allete, BNI Coal, SaskPower, and the North Dakota Lignite Energy Council.

An initial economic and feasibility study of the CACHYS™ concept, including definition of the process, development of process flow diagrams (PFDs), material and energy balances, equipment selection, sizing and costing, and estimation of overall capital and operating costs, is performed by Barr with information provided by UND and Envergex.

The technology—Capture from Existing Coal-Fired Plants by Hybrid Sorption Using Solid Sorbents Capture (CACHYS™)—is a novel solid sorbent technology based on the following ideas: reduction of energy for sorbent regeneration, utilization of novel process chemistry, contactor conditions that minimize sorbent-CO_2 heat of reaction and promote fast CO_2 capture, and a low-cost method of heat management. The technology's other key component is the use of a low-cost sorbent.

The proposed CACHYS™ concept consists of the following components:

1. A hybrid sorbent that can capture CO_2 from flue gases exiting a desulfurization scrubber. This hybrid sorbent is composed of the following: (i) active alkaline components that react with CO_2; (ii) a defined amount of additives combined with the alkaline component to enable low heats of reaction and to optimize specific physical properties; and (iii) a minor quantity of promoters to activate the alkali components.
2. Adsorber operation to achieve a high degree of sorbent conversion and CO_2 capture, while minimizing thermal effects.
3. Regenerator operation that fosters sorbent transformations consistent with low heats of dissociation for CO_2 release.

The basis for this study was results from a DOE SBIR-STTR exploratory research project conducted by Envergex LLC together with UND. A novel process (CACHYS™) was developed from this initiative. The technology and feasibility analysis in this report was performed using a combination of laboratory test results as well as modeling efforts from the above study.

Key items identified as part of the exploratory research included sorbent and process metrics, such as heat of reaction and sorbent capacity, as well as the operating envelope of the adsorber and regenerator systems. The heats of reaction measured during testing ranged from 0 to 80 kJ/mol CO_2; an average value of 40 kJ/mol CO_2 was used in the process modeling efforts. Various loadings of the active component in the sorbent were tested; a conservative value for the active component loading was used in the feasibility study. In addition, bench-scale test results indicated sorbent capacity ranges from 7 to 10 grams of CO_2/100 grams of sorbent. Based on these key elements of the physical and chemical performance of the sorbent, a detailed process design was conducted using Aspen Plus® software.

The basis for the process design further included input from a previous DOE-funded analysis (Cost and Performance Baseline for Fossil Energy Plants, Volume 1: Bituminous Coal and Natural Gas to Electricity; Revision 2, November 2010). The process design covered a supercritical pulverized coal-fired power plant with a net power output of 550MW_e and equipped with an Econoamine-based system for post-combustion CO_2 capture. The gas composition as well as the flue gas flow corresponding to the gross power output of 662MW_e was used as a baseline for the CACHYS™ process modeling effort. The Aspen Plus® design provided heat and material balance data that was used in estimating the cost of CO_2 capture, separation and compression, while benchmarking against other competing technologies, such as the Econoamine-based system.

The project will develop key information for the CACHYS™ process—sorbent performance, energy for sorbent regeneration, physical properties of the sorbent, the integration of process components, sizing of equipment, and overall capital and operational costs of the integrated CACHYS™ system. Through integrated bench-scale testing, this project aims to develop a novel sorbent-based, post-combustion technology, namely the CACHYS™ process, which can achieve at least 90% CO_2 removal from coal-fired power plants while demonstrating progress toward achievement of the DOE target of less than a 35% increase in the levelized cost of electricity (LCOE).

1.2 Key Finding—ASPEN Model Review

Barr met with staff from UND's Institute for Energy Studies and staff from Envergex to review the Aspen Plus®–based process model developed by UND. The Aspen Plus® process model was designed to evaluate a potential process for CO_2 capture. The model begins with desulfurized flue gas and ends with compressed liquid CO_2 for reuse or sequestration.

The review consisted of an overview of the entire model and examination of each unit operation represented therein. The system was evaluated from the standpoint of each unit's necessity to the process, how each unit was represented (e.g., kinetic versus equilibrium reactions, heat transfer extent, etc.), whether any necessary equipment was absent, and the reasonableness of the assumptions used within the model. The process streams were examined in like manner. The overall mass and energy balance of the process was reviewed and confirmed.

The model's overall quality was found suitable for determining and tracking the magnitudes of mass and energy into and out of the CO_2 capture process. While the model does not include the power plant, it does include the important links to the power plant, such as flue gas and steam streams. The model output was deemed adequate for the basis of Barr's cost estimating task.

1.3 Key Finding—Design Basis

Using the Aspen Plus® model as a foundation, the PFD was populated as shown in Exhibit A. The PFD included the equipment accounted for in the Aspen Plus® model, along with the material handling and transfer equipment. Creating the PFD allowed for a complete major equipment list to be formulated, along with balance-of-plant equipment to be accounted for, and electrical requirements to be considered.

1.4 Key Finding—Major Equipment

Major equipment for one CACHYS™ process train consists of the following:

- A flue gas cleanup system with CO_2 adsorber, inlet and exhaust fans, cyclone separator, sorbent conditioner, baghouse, and stack;
- A Solex sorbent regeneration system with a feed bin, rotary airlock, sorbent heaters and coolers, and fin fan cooler;
- A preconditioning and CO_2 compression system with condensate pumps and collection tank, four-staged intercooled compression skid, and condensing heat exchanger for energy recovery; and

- Fresh and spent sorbent handling systems with screw conveyors, bucket/L-path conveyors, blowers, baghouse, and silo storage.

Other major equipment includes transformers, switchgear, motor control centers, shop-fabricated tanks, general-service pump skids, miscellaneous process equipment, as well as an instrumentation and control package.

1.5 Key Finding—Heat Balance

CO_2 capture and compression systems impact the overall heat rate of a coal-fired power plant two ways:

- Consuming heat in the form of steam extraction from the steam turbine; and
- Consuming station service to operate the equipment in the carbon capture and compression system. The majority of the station service is consumed in compressing the CO_2 that is captured. Other auxiliary uses, such as flue gas inlet/outlet fans, conveyors, pumps, etc., also consume station service.

In developing the heat balance for the CACHYS™ system, Barr used the Cost and Performance Baseline for Fossil Energy Plants, Volume 1, Revision 2, dated November 2010 as a reference document. Case 12 from the report, developed for a 550 MW_e (net) supercritical pulverized coal-fired power plant with CO_2 capture, was used for comparison.

The CACHYS™ system required significantly less heat input in the form of steam extraction from the steam turbine than the Econoamine System used to develop Case 12 of the DOE report. This results in a significant thermal efficiency improvement for the CACHYS™ system compared to an Econoamine System. Summary results are shown in Table 1.1.

Table 1.1 Thermal Performance Summary

	Case 12 (DOE, 2010)	**CACHYS™**
Heat Requirements (MMBtu/hr)	2,335.0	547.6
Thermal Efficiency (%)	28.4	34.6

1.6 Key Finding—Capital Cost

Barr calculated the capital cost for the CACHYS™ system as an overnight cost calculated in 2012 dollars, with no adjustments for escalation in future years. The cost consists of equipment and materials, construction labor, engineering, and construction and project management, as well as process and project contingencies. The capital cost is based on retrofitting the CACHYS™ system into the flue gas stream of an existing, hypothetical, 600 to 700 MW coal-fired power plant located on a generic, greenfield site in moderate climates within the United States.

High-level quantity takeoffs for major system components, such as sorbent regeneration, flue gas cleanup, and conveyance systems were developed from the general arrangement drawings and the PFD. Cost allowances were used for construction quantities where current project definition did not allow for the determination of itemized construction quantities. These allowances were based on costs from indicative coal-fired power projects considered to be similar in scope and level-of-effort. Databases for costs were provided by Barton Malow Company, an EPC construction contractor based in southeast Michigan.

The capital cost corresponds to a Class 5 estimate class (AACE International Recommended Practice No. 18R-97) for the process industries, with an end use for screening and feasibility studies. A Class 5 estimate classification is characterized by limited project definition and the wide-scale use of scaling and power industry experience to calculate costs.

The capital cost for the CACHYS™ system installed on a 670 MWe (net) supercritical pulverized coal-fired power plant is estimated to be $672.3 million, which represents a unit cost of $1,004 per kilowatt (net).

1.7 Key Finding—Operation and Maintenance Cost

Barr evaluated the yearly operation and maintenance (O&M) costs associated with the CACHYS™ system. The main components of the yearly operating cost are:

- O&M labor
- Maintenance materials
- Sorbent

The O&M labor was estimated using similarly-sized projects, such as coal-fired power plants; operating experience; and scrubber installations. The CACHYS™ system has very similar components and will require highly-skilled O&M personnel.

The largest single operating expense is the cost of the CO_2 sorbent estimated at $1.00/lb. Approximately 6,500 tons/hr of sorbent are moved within the CACHYS™ system. It is estimated that 2 tons/hr are rejected to waste. The waste sorbent is assumed to be sold as fertilizer supplement at $0.50/lb. A summary of O&M costs is provided in Table 1.2.

Table 1.2 O&M Cost Summary

Category	Cost per year
Personnel	$2,723,000
Maintenance Materials	$1,380,000
Sorbent	$29,784,000
Sorbent Recovery	-$14,892,000
Total	**$18,995,000**

1.8 Key Finding—Levelized Cost of Electricity

The major inputs to developing the LCOE and the cost per ton of CO_2 captured are:

- Process flow diagram
- Heat balance diagram
- Capital cost of the carbon capture system
- O&M cost of the carbon capture system

A methodology for turning these inputs into an LCOE and cost per ton of CO_2 captured is contained in Attachment 3 of the Federal Opportunity Announcement (DE-FOA-0000403), included as Exhibit B of this report.

Barr used this methodology to calculate the following parameters described by the FOA. The full results are provided in Section 8.

- Parasitic power losses
- LCOE
- Cost of CO_2 capture—$/ton
- Changes in pulverized coal (PC) plant efficiency

As shown in Table 1.3, the LCOE results for the CACHYS™ system were also compared to Cases 11 and 12 contained in the DOE report.

Table 1.3 Cost Comparison Summary

	Case 11 (DOE, 2010)	Case 12 (DOE, 2010)	CACHYS™
LCOE (mills/kWh)	74.7	132.28	95.1

1.9 Key Finding—Cost of CO_2 Capture

The FOA outlines the methodology for calculating the cost of CO_2 capture expressed in $/ton. The inputs are described below:

- Total O&M costs—this item is composed of both fixed and variable components (see Section 7). The largest component is approximately $15 million per year for the sorbent;
- Capital charge for the CO_2 system—this item represents the yearly cost recovery needed to support the capital investment as shown in the equation below; and
- CO_2 captured in tons using the PFD.

The capital Charge [$/yr] is equivalent to the Capital Charge Factor multiplied by the Capital Cost, where:

- Capital Charge Factor = 17.5% per year; and
- Capital Cost = $672.8 million.

The results are shown in the Table 1.4.

Table 1.4 Cost of CO_2 Capture Summary

	Cost Per Year
Total O&M	$18,995,000
Capital Charge	$117,740,000
Total Cost	$136,735,000
	Tons Per Year
CO_2 Captured	4,405,200
	Cost Per Ton
Cost of CO_2 Capture	$31.04

1.10 Key Finding—Sensitivity Case

Steam is used as a heat source to regenerate the sorbent material. The results discussed in the previous sections are based upon the current state of the research for the sorbent material.

To represent a case in which the sorbent material requires more steam than expected, it was decided to double the amount of indirect steam required to regenerate the sorbent from 625 to 1250 MMBtu/hr. The results are shown in Table 1.5. Calculations can be found in Exhibit D.

Table 1.5 Sensitivity Case Summary

	Case 12	**CACHYS™ Base Case**	**Sensitivity Case**
Steam Turbine Power (kWe)	662,880	773,200	731,300
Net Power (kWe)	549,970	670,400	628,500
Equivalent Steam Use (kW)	156.7	46.2	88.2
Net Plant Efficiency % (HHV)	28.4	34.6	32.5
LCOE (mills/kWh)	132.8	95.1	107.9

1.11 Key Finding—550 MW Net Output Sensitivity Case

A sensitivity case was run reducing the net output of the supercritical PC power plant integrated with the CACHYS™ process from 670.4 to 550 MWe. Adjustments were made to the CACHYS™ base case by prorating (550/670.4) the following categories:

- Gross and net turbine power
- Station service use
- Carbon capture system electrical use
- Equivalent steam use (kW)
- Tons of CO_2 captured
- Amount of sorbent used

The capital cost of the CACHYS™ system was prorated down by the following rule of thumb:

$$\text{New Capital Cost} = (550/670.4)^{0.7} \times \$672.8\text{M}$$

This approach to modifying the capital cost reflects the fact that some components of the capital cost have a fixed component and some components are variable. The results of the calculations are shown in Tables 1.6 and 1.7. The supporting calculations are provided in Exhibit C.

Table 1.6 LCOE Summary

	Case 12	**CACHYS™ Base Case**	**550 MW Sensitivity Case**
Steam Turbine Power (kWe)	662,880	773,200	634,340
Net Power (kWe)	549,970	670,400	550,000
Equivalent Steam Use (kW)	156.7	46.2	37.9
Net Plant Efficiency % (HHV)	28.4	34.6	34.6
LCOE (mills/kWh)	132.8	95.1	89.5

Table 1.7 Cost of CO_2 Capture Summary

	CACHYS™ Base Case Cost Per Year	**550 MW Sensitivity Case**
Total O&M	$18,995,000	$16,072,000
Capital Charge	$117,740,000	$102,504,000
Total Cost	$136,735,000	$118,577,000
	Tons Per Year	**Tons Per Year**
CO_2 Captured	4,405,200	3,614,000
	Cost Per Ton	**Cost Per Ton**
Cost of CO_2 Capture	$31.04	$32.81

1.12 Key Finding—Zero Value Sorbent Sensitivity Case

The base case assumes that the spent sorbent is recovered and sold into the fertilizer market thereby recovering 50% of the value of the sorbent. Cases were run for the base case and the 550 MW case assuming that the spent sorbent had zero value. The results of the calculations are shown in Tables 1.8 and 1.9. The supporting calculations are in Exhibit E.

It should be noted that the sorbent consumption is based upon an entering flue gas SO_2 concentration of 50 ppm. Use of a polishing scrubber ahead of the CACHYS™ system could potentially reduce the SO_2 concentration to less than 5 ppm. Reducing the concentration of SO_2 below 5ppm will reduce the amount of SO_2 that ends up as sulfate in the sorbent. Sorbent-containing sulfate must be removed from the system and then replaced with fresh sorbent. The end result of lower SO_2 will be reduced consumption of sorbent, which will greatly reduce the O&M cost down from the $33,887,000 shown in Table 1.8.

Table 1.8 Cost of CO_2 Capture Summary Base Case (with Zero Value Spent Sorbent)

	CACHYS™ Base Case Cost Per Year	Zero Value for Spent Sorbent Cost Per Year
Total O&M	$18,995,000	$33,887,000
Capital Charge	$117,740,000	$117,740,000
Total Cost	$136,735,000	$151,627,000
	Tons Per Year	**Tons Per Year**
CO_2 Captured	4,405,200	4,405,200
	Cost Per Ton	**Cost Per Ton**
Cost of CO_2 Capture	$31.04	$34.42

Table 1.9 Cost of CO_2 Capture Summary 550 MW Case (with Zero Value Spent Sorbent)

	550 MW Sensitivity Case	Zero Value for Spent Sorbent Cost Per Year
Total O&M	$16,072,000	$28,290,000
Capital Charge	$102,504,000	$102,504,000
Total Cost	$118,577,000	$130,794,000
	Tons Per Year	**Tons Per Year**
CO_2 Captured	3,614,000	3,614,000
	Cost Per Ton	**Cost Per Ton**
Cost of CO_2 Capture	$32.81	$36.19

2.0 Aspen Model Review

2.1 Aspen Model Review

Barr Engineering Co. met with staff from the University of North Dakota's Institute for Energy Studies and staff from Envergex LLC to review the Aspen Plus® process model developed by UND. The Aspen Plus® process model was designed to evaluate a potential process for CO_2 capture. The model begins with desulfurized flue gas and ends with compressed liquid CO_2 for reuse or sequestration.

The review consisted of an overview of the entire model and examination of each unit operation represented therein. The system was evaluated from the standpoint of each unit's necessity to the process, how each unit was represented (e.g., kinetic versus equilibrium reactions, heat transfer extent, etc.), whether any necessary equipment was absent, and the reasonableness of the assumptions used within the model. The process streams were examined in like manner. The overall mass and energy balance of the process was reviewed and confirmed.

The model's overall quality was found suitable for determining and tracking the magnitudes of mass and energy into and out of the carbon capture process. While the model does not include the power plant, it does include the important links to the power plant, such as flue gas and steam, as described below. The model output was deemed adequate for the basis of Barr's cost estimating task.

As with any simulation, the assumptions that go into the model are key to the model's accuracy in representing the actual process. The process-specific assumptions, in many cases, are still being confirmed. This was taken into consideration during review of the process model. Throughout the model's review, several significant changes were made in order to update the process and better represent the flow streams.

Based on the above discussion, the following observations have been made:

1. The model begins with desulfurized flue gas and ends with compressed liquid CO_2 for reuse or sequestration.
2. The model incorporates the required assumptions as prescribed by solicitation DE-FOA-0000403.
3. The model is based on UND-developed adsorbent, the exact behavior of which is still being determined in laboratory tests.
4. The mass and energy flows are being properly tracked and accounted for.

5. The model, once updated with additional sorbent data, will represent a useful tool for evaluating process sensitivity to certain major variables.
6. The model inputs and outputs are sufficiently balanced to support Barr's efforts on equipment sizing and related activities.

3.0 Design Basis

3.1 Carbon Capture Design Basis

The purpose of this report is to perform an initial evaluation of the technical and economic feasibility of the CACHYS™ concept. The CACHYS™ process takes a water saturated CO_2-rich flue gas through a fluidized bed adsorber that is designed to operate at 60 to 85°C and a static pressure of 50 to 200 in H_2O. The CO_2-rich flue gas is scrubbed using a hybrid sorbent process that reduces the CO_2 gas concentration by 90 percent. The spent sorbent is then routed to a regenerator for regeneration using a temperature swing. The heat required for regeneration is provided by pressurized steam. It is anticipated that the regenerator will operate at 150 to 170°C.

The techno-economic assessment for the CACHYS™ process covered the unique process design comprising flue gas pre-treatment, adsorber and regenerator sections and CO_2-rich gas compression. Barr completed this portion with the assistance of engineers from UND and Envergex. The following steps were followed to complete the initial technology and economic feasibility study.

3.1.1 Sorbent Selection and Formulation

Envergex used laboratory-scale test methods to expedite sorbent selection and formulation, as well as to determine the heat of sorption, sorbent capacity (CO_2 loading), and sorbent physical properties for process design definition. A larger-scale, fixed-bed reactor will be used to obtain data on adsorption/desorption kinetics, working capacity, and cyclic operation. Optimum process conditions (e.g., temperatures, pressures, and residence times), preferred sorbent compositions, and updated bench-scale equipment design (e.g., size, energy duties, and material feed rates) were established.

3.1.2 Detailed Process Description

Process flow diagrams (PFDs) that included all unit operations required to capture CO_2 from flue gas, desorb the CO_2, regenerate the sorbent, and recover the sorbent were developed by Barr using the Aspen Plus® process model developed by UND. The key process equipment was identified. Process boundaries and CACHYS™ process plant size were then defined for a 550 MW_e (target output) pulverized-coal (PC) power plant.

The PFD was used as a major input to the following sections of the report:

- 4.0 Major Equipment List
- 5.0 Heat Balance

- 6.0 Capital Cost Estimate
- 7.0 Operating Cost Estimate

3.1.3 Process Modeling and Equipment Design

Based on the process concept, material and energy balances were generated using Aspen Plus® simulation software. The Aspen Plus® model provided the following data:

1. Generation of material and energy balances around the combined CO_2 capture and compression process equipment;
2. Determination of heat/mass flows and utility requirements;
3. Completion of stream tables showing operating pressures, temperatures, compositions, and enthalpies of all streams entering and leaving major process equipment; and
4. Development of process heat and mass flow tables and other information required to size equipment.

The above items laid the foundation to complete a PFD. Using the Aspen Plus® model as a foundation, the PFD was populated as shown in Exhibit A. The PFD included the equipment accounted for in the Aspen Plus® model, along with the material handling and transfer equipment. Creating the PFD allowed for a complete major equipment list to be formulated, along with balance-of-plant equipment to be accounted for, and electrical requirements to be considered.

3.2 Major Equipment

The following sections describe the equipment required per the PFD as shown in Exhibit A. The accounts used in the equipment list correspond to the account numbers used in the cost estimates in Section 7 and Exhibit C.

Accounts 1 through 4, which cover Sitework; Foundations and Concrete; Structural; and Piping, Valves, and Supports, do not have any major associated equipment.

3.2.1 Account 5—Flue Gas Cleanup

The flue gas cleanup account consists of the following: inlet fan, CO_2 adsorber, cyclone separator, CO_2-lean fabric filter (FF) baghouse, exhaust fan, exhaust stack, and a sorbent conditioner. The flue gas from the PC plant travels through an inlet fan into the CO_2 adsorber. A cyclone separator sends recycled sorbent back through the system. The CO_2-lean flue gas then proceeds to a fabric filter baghouse. The exhaust fan sends the CO_2-lean flue gas to the stack.

3.2.2 Account 6—Sorbent Regeneration

The sorbent regeneration account consists of the following: feed bin with rotary airlocks, sorbent heaters, regenerators, sorbent coolers, and fin fan coolers. The spent sorbent flows to a feed bin with a rotary air lock and then proceeds to a series of Solex Thermal Science equipment, which consists of heater sections that use steam provided by the existing PC plant to regenerate the sorbent. The regenerated sorbent then passes through a rotary air lock into a hopper and is then transferred back to the adsorber area. Glycol fin-fan coolers provide additional cooling of the regenerated sorbent prior to transfer.

3.2.3 Account 7—Preconditioning and CO_2 Compression Train

The preconditioning and CO_2 compression train consists of the following: condensate return pump, condensate collection tank, four-staged intercooled CO_2 compression skid, cooling water pump, and a heat exchanger for heat recovery. CO_2 from the compression train baghouse will flow to the condensing heat exchanger skid, which will utilize condensate. Condensibles will be removed and the CO_2 will travel on to the intercooled four-stage compression skid.

3.2.4 Account 8—Sorbent Handling

The sorbent handling account consists of the following: fresh-sorbent unloading station, fresh-sorbent storage silo, fresh-sorbent blower, regenerated-sorbent transfer blower, screw conveyor, and bucket elevator/L-Path conveyor. The fresh sorbent will be unloaded and transferred via screw conveyor and bucket elevator/L-Path conveyor to the fresh-sorbent storage silo. The fresh sorbent will then be transferred to the sorbent conditioner for use in the adsorber via a blower.

3.2.5 Account 9—Waste-Sorbent Recovery and Handling

The waste-sorbent recovery and handling account consists of the following: waste-sorbent storage silo, waste-sorbent transfer blower, CO_2 lean baghouse sorbent transfer blower, separator, CO_2 compression train baghouse, screw conveyor, and bucket elevator/L-Path conveyor. Waste sorbent from the CO_2 lean baghouse will be transferred via the waste-sorbent transfer blower to the waste-sorbent storage silo for disposal. Transfer from the waste-sorbent storage silo to disposal will occur via a screw conveyor and bucket elevator/L-Path conveyor. Sorbent from the CO_2 lean baghouse can also be transferred via the CO_2 lean baghouse sorbent transfer blower to the sorbent conditioner, depending on the operating conditions.

3.2.6 Account 10—Balance-of-Plant Equipment

The balance-of-plant equipment account consists of the following: shop-fabricated tanks, general service pump skids, and miscellaneous process plant equipment—all components that are not included in the primary system itself, that are necessary, but not primary components.

3.2.7 Account 11—Electrical

The CO_2 capture process requires significant modifications to any existing power plant. To accommodate these additions as straight-forwardly as possible, the basis of the design considered the installation of two large power transformers directly connected to an electrical transmission system. A common transmission voltage leaving generating stations is 138 kilovolts, and it was chosen as the primary voltage for supplying the CACHYS™ equipment.

Two 40 MVA transformers are arranged to provide power to redundant medium-voltage busses for the 55 MW electrical load. The medium-voltage busses provide power to the large equipment loads, such as the forced draft fans, induced draft fans, CO_2 compressors, and to the low-voltage electrical system. Much of the remainder of the equipment is expected to be powered from the low-voltage electrical system. The electrical distribution equipment is expected to be located as centrally as possible in a dedicated room.

3.2.8 Account 12—Instrumentation and Controls

The CACHYS™ equipment is expected to be delivered with the required instrumentation in each equipment package. The balance-of-plant systems will require a separate allotment for instrumentation, which has been included in the cost estimate as such.

The system operation is expected to be performed from the existing plant control room via a distributed control system (DCS). The DCS make will be from the same manufacturer as the existing plant; however, the system will be stand-alone. The size and complexity of the CACHYS™ process warrants a separate data-highway network. The auxiliary operators will be dispatched to this plant area for monitoring equipment from the existing control-room area.

3.3 General Arrangement

The general arrangement drawings were formulated using the PFD and the equipment sizing that was compiled based off the Aspen Plus® model flowstreams. Using the required flowpath, the equipment was laid out to accommodate the process with the main objective of utilizing gravity when possible to reduce the footprint of the facility and eliminate handling systems that could potentially degrade

the sorbent during transfer. With these two objectives in mind, bucket elevators, L-Path conveyors, screw conveyors, and stacking of the Solex sorbent regeneration equipment was utilized. This arrangement reduced the overall footprint. The general arrangement will consist of four trains of process equipment.

4.0 Major Equipment List

4.1 Major Equipment List

Major equipment items for the CO_2 capture facility are shown in the following tables.

Accounts 1 through 4, which cover Sitework; Foundations and Concrete; Structural; and Piping, Valves, and Supports, do not have any major associated equipment.

Accounts 10 through 12, which are Balance-of-Plant; Electrical; and Instrumentation and Controls, require detailed engineering to determine type, design condition, and operating quantity. Therefore, these accounts are not included in the major equipment list at this time.

4.1.1 Account 5—Flue Gas Cleanup

PFD Equipment Number	Description	Type	Design Condition	Operating Quantity
1-001-FS001	Inlet Fan	Centrifugal	4,000 Hp	4
1-002-AD001	CO_2 Absorber	Fluidized Bed	16'x20'x75'	4
1-004-SEP001	Cyclone Separator	Cyclone	10' diameter	12
1-003-HUM001	Sorbent Conditioner	Fluidized Bed	10' diameter	4
1-005-FIL-001	CO_2 Lean Baghouse	Fabric Filter	1,450,000 lb/hr	4
1-XXX-ID001	Exhaust Fan	Centrifugal	1,000 Hp	4
1-006-STK001	Stack	Concrete	250 ft	1

4.1.2 Account 6—Sorbent Regeneration

PFD Equipment Number	Description	Type	Design Condition	Operating Quantity
1-007-BLW001	Spent Sorbent Transfer Blower	Centrifugal	415 tons/hr	16
None	Sorbent Feed Bin w/ Rotary Air Lock	Carbon Steel	415 tons/hr	16
1-008-HTR001	Sorbent Heater	Solex	1.1 MMBtu/hr	16
1-011-REG001	Regenerator	Solex	415 ton/hr	16
1-009-COL001	Cooler 1	Solex	1.1 MMBtu/hr	16

1-010-COL001	Cooler 2	Solex	1.7 MMBtu/hr	16
None	Fin Fan Cooler	Glycol/air	7.1 MMBtu/hr	4
None	Sorbent Collection Bin w/ Air Lock	Rotary	415 ton/hr	16

4.1.3 Account 7—Preconditioning and CO_2 Compression Train

PFD Equipment Number	Description	Type	Design Condition	Operating Quantity
1-017-COMP001	CO_2 Compression Self-Contained Skid	Four Stage Intercooled	2214 PSIA	4
1-014-HX001	Condensing Heat Exchanger Skid for Energy Recovery	Included in compressor skid	49.5 MMBtu/hr	4

4.1.4 Account 8—Sorbent Handling

PFD Equipment Number	Description	Type	Design Condition	Operating Quantity
None	Fresh Sorbent Unloading Station	Pneumatic Unloader	500 ton/hr average	4
1-023-FSSIL001	Fresh Sorbent Storage Silo	Storage Silo	5 days of storage	4
1-024-BLW006	Fresh Sorbent Blower	Centrifugal	500 tons/hr average	4
None	Conveyor	Screw	500 tons/hr average	4
None	Elevator or L-Path Conveyor	Bucket	500 ton/hr average	4

4.1.5 Account 9—Waste Sorbent Recovery and Handling

PFD Equipment Number	Description	Type	Design Condition	Operating Quantity
001-021-WSSIL001	Waste Sorbent Storage Silo	Carbon Steel	5 days of storage	4
1-019-BLW004	Spent Sorbent Transfer Blower	Centrifugal	500 tons/hr average	4

1-020-BLW005	Regenerated Sorbent Transfer Blower	Centrifugal	375 tons/hr	16
1-0XX-SEP02	Separator	Cyclone	640 tons/hr	16
1-013-l002	CO_2 Compression Train Baghouse	Fabric Filter	450,000 lbs/hr	4

5.0 Heat Balance

5.1 Heat Balance Analysis

5.1.1 Overview

CO_2 capture and compression systems impact the overall heat rate of a coal-fired power plant two ways:

- Consuming heat in the form of steam extraction from the steam turbine; and
- Consuming station service to operate the equipment in the CO_2 capture and compression system. The majority of the station service is consumed in compressing the CO_2 that is captured. Other auxiliary uses, such as flue gas inlet/outlet fans, conveyors, pumps, etc., also consume station service.

In developing the heat balance for the CACHYS™ system, Barr used the Cost and Performance Baseline for Fossil Energy Plants, Volume 1, Revision 2, dated November 2010 as a reference document. Case 12 from the report, developed for a 550 MW supercritical PC-fired power plant with CO_2 capture, was used for comparison.

5.1.2 CACHYS™ Process Requirements

The CACHYS™ system extracts steam for two different uses within the Solex-supplied sorbent regenerator, as shown in Table 5.1. The steam will be supplied from the turbine at the exhaust of the intermediate-pressure (IP) turbine section before it enters the low-pressure (LP) turbine section. It should be noted that the CACHYS™ system requires much less heat in the form of steam than the Econoamine System used in Case 12. This results in a major heat rate advantage for CACHYS™.

Table 5.1 CACHYS™ Heat Duty Summary

PFD Identifier	Pressure (psia)	Temperature (°F)	Heat Duty (MMBtu/hr)
Q1	134.9	687.5	897.6
Case 12	75.0	556.3	2335.0

A unique aspect of the CACHYS™ process is the heat recovery during regeneration. Condensed steam that is used as a heating medium for regeneration will be recovered and returned as condensate to the PC plant steam turbine system.

Additionally, the CACHYS™ system also recovers heat from the CO_2 rich stream exiting the regenerator using a condensing heat exchanger and returns LP steam to the steam turbine, as shown in Table 5.2.

Table 5.2 CACHYS™ Heat Recovery Summary

PFD Identifier	Heat Recovery Electrical Equivalence (hp)
W4	19392

The net result is that the CACHYS™ system requires 547.6 MMBtu/hr compared to 2,335.0 MMBtu/hr for the Econoamine System used in Case 12.

5.1.3 CACHYS™ Auxiliary Power Requirements

The auxiliary power requirements are shown in Table 5.3.

Table 5.3 Auxiliary Power Summary

Item	Use (kW)
CO_2 Compressors	39,900
Flue Gas Inlet Fans	11,300
Flue Gas Exhaust Fans	2,800
Miscellaneous Balance of Plant	1,000
Total	**55,000**

5.1.4 Plant Performance Summary

A plant performance comparison between Case 12 (DOE report) and CACHYS™ is contained in Table 5.4. The Case 12 auxiliary power uses are adjusted where noted. The table describes the impact of sending heat to the CACHYS™ system and the effects of the reduced auxiliary power usage.

Table 5.4 Plant Performance Summary

	Case 12	**CACHYS™**
Steam Turbine Power (kW)	662,880	773,200[1]
Auxiliary Load Summary (kW)		
Coal Handling/Conveying	510	510
Pulverizers	3,850	3,850
Sorbent Handling (Scrubber)	1,250	1,250
Ash Handling	740	740
Primary Air Fans	1,800	1,800
Forced Draft Fans	2,300	2,300
Induced Draft Fans	11,120	11,120
Selective Catalyst Reduction (SCR)	70	70
Baghouse	100	100
Wet Flue-Gas Desulfurization (FGD)	4,110	4,110
Miscellaneous	2,000	2,000
Steam Turbine Auxiliaries	400	400
Condensate Pumps	560	560
Circulating Water Pumps	10,100	9,057[2]
Ground Water Pumps	910	480
Cooling Tower Fans	5,230	6,276[2]
Transformer Losses	2,290	2,743[3]
Total Power Block (kW)	47,340	47,800
CO_2 System	65,490	55,000
Total Auxiliary Use (kW)	112,830	102,800
Net Power (kW)	549,970	670,400
Net Plant Efficiency	28.4%	34.6%

Net Plant Heat Rate (HHV) (BTU/kWh)	12,002	9,859

[1] Steam turbine output increased due to the reduced heat requirements of the CACHYS™ system.

[2] Circulating water pump and cooling tower kW adjusted down because of elimination of amine system used in Case 12, and adjusted up to reflect higher turbine exhaust flows for the CACHYS™ system.

[3] Transformer losses increased due to larger steam turbine output.

6.0 Capital Cost Estimate

6.1 Qualification of Estimated Cost

The feasibility-level construction cost estimate provided in this report is made on the basis of Barr's experience and qualifications and represents our best judgment as experienced and qualified professionals familiar with the project. This opinion is based on project-related information available to Barr at this time, current information about probable future costs, and a concept-level design of the project. The opinion of construction cost will likely change as more information becomes available and further design is completed. In addition, since the eventual cost of labor, materials, equipment, or services furnished by others; the contractor's methods of determining prices; competitive bidding; and market conditions are unknown; Barr cannot and does not guarantee that proposals, bids, or actual construction costs will not vary from the opinion of probable construction cost presented in this report. Greater assurance as to the probable construction cost can be achieved through additional design to provide more complete project definition.

6.2 Estimate Type

The cost estimate corresponds to a Class 5 estimate class (AACE International Recommended Practice No. 18R-97) for the process industries. This estimate classification is characterized by limited project definition and the wide-scale use of scaling and power-industry experience to calculate costs. A Class 5 has an end use for screening and feasibility studies, with an accuracy range of +100% to -50%. These parameters for a Class 5 estimate are shown Table 6.1.

Table 6.1 AACE Generic Cost Estimate Classification Matrix

	Primary Characteristic	Secondary Characteristics			
	Level of Project Definition	**End Usage**	**Methodology**	**Accuracy Range**	**Preparation Effort**
Estimate class	Expressed as % of complete project definition	Typical purpose of estimate	Typical estimating method	Typical +/- range relative to best range index of 1[a]	Typical degree of effort relative to least cost index of 1[b]
Class 5	0% to 2%	Screening or feasibility	Stochastic or judgment	10 to 20	1
Class 4	1% to 5%	Concept study or feasibility	Primarily stochastic	5 to 10	2 to 4
Class 3	10% to 40%	Budget, authorization or control	Mixed but primarily stochastic	3 to 6	3 to 10
Class 2	30% to 60%	Preliminary estimate	Primarily deterministic	2 to 3	5 to 20
Class 1	50% to 100%	Check estimate or engineer's estimate	Deterministic	1	10 to 100

Notes:
[a] If the range index value of "1" represents +10/-5%, then an index value of 10 represents +100/-50%.
[b] If the cost index value of "1" represents 0.005% of project cost, then an index value of 100 represents 0.5% of project cost.

6.3 Cost Breakdown

Feasibility-level cost estimates are presented for the following construction features required for the project:

1. Sitework
2. Foundations and concrete
3. Structural
4. Piping, valves, and supports
5. Flue gas cleanup
6. Sorbent regeneration

7. Preconditioning and CO_2 compression train
8. Sorbent handling
9. Waste-sorbent recovery and handling
10. Balance-of-plant equipment
11. Electrical
12. Instrumentation and controls

6.4 Cost Estimate Methodology

The total plant cost (TPC) was determined to estimate the CACHYS™ process cost. The TPC is the sum of the bare erected cost (BEC) for the process, plus the cost of the engineering, procurement, and construction (EPC) contractor, as well as process and project contingencies. The TPC is an overnight cost calculated in 2012 dollars, with no adjustments for escalation in future years.

The BEC consists of the cost of equipment and materials, as well as new on-site facilities, site infrastructure, and balance-of-plant equipment necessary to support the CACHYS™ process. It includes the direct and indirect construction labor required for installation. The BEC contains no contingency.

The EPC costs include detailed design and building-related permits obtained by the contractor, as well as project and construction management costs. EPC costs are based on a construction-management approach utilizing a prime contractor with multiple subcontractors. This approach provides the owner with greater scope control and flexibility, while mitigating the risk premium typically included in a traditional EPC lump-sum pricing structure. A construction allowance for items, such as price inflation over the duration of the construction period, casual overtime, and incidentals, has been included in the EPC cost.

The scope estimate is complete for CO_2 capture by hybrid sorption using solid sorbents from the flue gas stream of an existing, hypothetical, 600 to 700 MW coal-fired power plant located on a generic, greenfield site in moderate climates within the United States. Cost databases were provided by Barton Malow Company, an EPC construction contractor based in southeast Michigan. The battery limits are the system and structures depicted in the general arrangement drawings, PFD, and major equipment list.

Process steam, compressed air, water, and other utilities are assumed to be available for tie-in immediately adjacent to the CACHYS™ system structures. Station power is assumed to be available for tie-in at the high side of the auxiliary transformers for the CACHYS™ system.

No costs are included for specific modifications to the existing site (e.g., enlarging property boundaries, additional roads, stormwater management, engineered fill, etc.), or modifications to existing plant systems, such as providing steam and power to the location of the CACHYS™ system. The site is considered to be Seismic Zone 1, relatively level, and free from hazardous materials, archeological artifacts, or soil conditions requiring excessive treatment, such as rock, groundwater, and unstable materials.

6.5 Quantities and Allowances

High-level quantity takeoffs for major system components, such as sorbent regeneration, flue gas cleanup, and conveyance systems, were developed from the general arrangement drawings and the PFD.

Where current project definition did not allow for the determination of itemized construction quantities' bulk items, such as sitework, foundations, piping, and electrical, allowances were determined using indicative projects considered to be similar in scope and level-of-effort. These projects were:

- Retrofit of an existing 480 MW coal-fired power plant with installation of a new circulating fluidized bed scrubber in the southern United States;
- Installation of a new flue gas desulfurization unit that included the conversion of an existing electrostatic precipitator to a pulse-jet fabric filter, and installation of a new fly ash collection system at a 500 MW coal-fired power plant in the western United States;
- Retrofit of an existing 480 MW coal-fired power plant with installation of a new pulse-jet fabric filter in the midwestern United States; and
- Retrofit of an existing 3200 MW coal-fired power plant with installation of a selective catalytic reduction (SCR) system in the midwestern United States.

Pricing for major equipment was identified as follows:

- Original equipment manufacturer (OEM) initial pricing estimates from Solex for sorbent regeneration system;
- OEM pricing for CO_2 compression system; and
- Historical OEM pricing for similar major equipment from power plant retrofits.

6.6 Contingency

Contingency represents an allowance to cover unknowns, uncertainties, and/or unanticipated conditions that are not possible to evaluate adequately from the information at hand at the time the cost estimate is prepared, but must be represented by a sufficient cost to cover the identified risks. Contingency relates to a known, defined project scope and is not used to predict future project scope or schedule changes. Contingency will normally decrease as more design information is known. This section summarizes important cost-estimating considerations related to cost contingency.

Contingencies, as used in this estimate, are intended to help identify an estimated construction cost amount for the items included in the current project scope. The contingency percentage includes process contingency and project contingency. These contingency amounts are based on AACE guidelines and professional judgment considering the level of design completed, the complexity of the work, and uncertainties in quantities and unit prices. The contingency includes the estimated cost of ancillary items not currently identified in the quantity estimates and allowances, but commonly identified in more detailed design and required for completeness of the work.

Contingencies are assigned to the cost estimate of each project feature on the basis of engineering judgment and on the relative completeness of project definition. Contingency, as used in this cost estimate, will decrease with future design efforts. The contingency provided with the estimate does not account for:

- Changes in labor availability or productivity
- Delays in equipment deliveries
- Changes in current industry standards or regulations
- Major changes in quantities
- Major changes in unit pricing
- Major changes in scope during detailed design or construction
- Major changes or revisions to the design basis
- Costs that may result from actual site conditions differing from generic site conditions assumed in this estimate
- Costs that result from construction change orders
- Costs that result from sequencing or expediting work to avoid critical path slippage
- Costs that result from possible project schedule slippage
- Costs that result from differing economic conditions or future cost growth

- Costs related to plant performance during and after start-up

6.6.1 Process Contingency

Process contingency provides for uncertainty in the cost estimate related to the technology's maturity. This technology is currently unproven at the commercial scale in power-generation applications. However, many aspects of the project use current proven and accepted technology for balance-of-plant and structural aspects. Therefore, process contingencies are applied to individual aspects of the cost estimate based on the current status of the technology for those individual aspects. AACE recommends the following guidelines summarized in Table 6.2 for the amount of process contingency to apply.

Table 6.2 AACE Guidelines for Process Contingency

Technology Status	Process Contingency (% of Associated Process Capital)
New concept with limited data	40+
Concept with bench-scale data	30-70
Small pilot plant data	20-35
Full-sized modules have been operated	5-20
Process is used commercially	0-10

Process contingencies used in this estimate were assigned as follows:

- New technology systems and components directly related to sorbent regeneration and waste conveyance used 50% due to uncertainties associated with scaling-up a concept based primarily on bench-test data.
- Conventional systems and components in support of the overall CO_2 process used 25% due to adaption of existing power-industry, commercially-available equipment applications to new bench-tested technology.
- Sitework, foundations, and concrete used no contingency based upon relative certainty these conventional applications can be adapted to the new technology with little or no risk.

6.6.2 Project Contingency

Project contingency compensates for cost uncertainties and construction risk associated with final design and construction that exists until the project is completed. Uncertainty in early stages of project planning and design, especially during the feasibility-study phase, are greater due to risk

factors, such as limited project definition, uncertainty regarding design and analysis assumptions, unforeseen constraints and constructability issues, construction schedule, and other construction risk factors. In general, uncertainty will decrease as greater definition is developed and more detailed information becomes available.

At this stage in the project, the design is less than 2% complete, and constructability has not been evaluated due to insufficient design detail. Therefore, the range of uncertainty of TPC is considered to be high. AACE suggests that project contingency for a Class 5 screening or feasibility study estimate should be 15 to 35% of the sum of BEC, EPC, and process contingency. Due to the relatively limited basis upon which this estimate is developed, a project contingency of 30% has been applied for each aspect of the cost estimate.

6.7 Capital Cost Summary

The capital cost for the CACHYS™ system is summarized in Table 6.3.

Table 6.3 CACHYS™ System Capital Cost Summary

Category	Cost	$/kW
Bare Erected Cost	$273,512,157	$517
EPC Cost	$125,579,386	$238
Process Contingency	$118,362,448	$224
Project Contingency	$155,258,478	$294
Total Plant Cost	**$672,786,738**	**$1,004**

The cost per kilowatt-hour for the CACHYS™ system at $1,004/kW was compared to Cases 11 and 12 of the Cost and Performance Baseline for Fossil Energy Plants, Volume 1, Revision 2, dated November 2010 as a reference document. Cases 11 and 12 were developed for a 550 MW supercritical PC-fired power plant. Case 11 was for a plant without CO_2 capture, and has a TPC unit cost of $1,647/kW. Case 12 includes CO_2 capture, and has a TPC of $2,913/kW. The difference in unit cost between Case 11 and Case 12 of $1,266/kW represents the carbon capture costs between the two cases. For the purpose of comparison, the unit cost of the CACHYS™ system at $1,004/kW is less than the carbon capture technology used for Case 12 at $1,266/kW.

7.0 Operating Cost Estimate

7.1 Overview

Barr evaluated the yearly operation and maintenance (O&M) costs associated with the CACHYS™ system. The main components of the yearly operating cost are:

- O&M labor
- Maintenance materials
- Sorbent

The O&M labor was estimated using similarly-sized projects, such as coal-fired power plants, operating experience, and scrubber installations. The CACHYS™ system has very similar components and will require highly-skilled O&M personnel. Personnel will be required to understand the following devices:

- Large fans
- CO_2 compression
- Fluidized beds
- Conveyors
- Fabric filters
- Pumps and piping

Maintenance materials were also estimated using similarly-sized projects. The major maintenance materials are filter bags for the two fabric filters and wear parts associated with the many sorbent conveyors.

The largest single operating expense is the cost of the CO_2 sorbent estimated at $1.00/lb. Approximately 6,500 tons/hr of sorbent are moved within the CACHYS™ system. It is estimated that 2 tons/hr are rejected to waste. The waste sorbent is assumed to be sold as fertilizer supplement at $0.50/lb.

7.2 O&M Cost Summary

The O&M costs for the CACHYS™ system are summarized in Table 7.1.

Table 7.1 O&M Cost Summary

Category	Cost per year
Personnel	$2,723,000
Maintenance Materials	$1,380,000
Sorbent	$29,784,000
Sorbent Recovery	-$14,892,000
Total	**$18,995,000**

8.0 Levelized Cost of Electricity and Cost of CO_2 Capture

8.1 Overview

The major inputs to developing the levelized cost of electricity (LCOE) and the cost per ton of CO_2 captured are the:

- PFD
- Heat balance diagram
- Capital cost of the carbon capture system
- O&M cost of the carbon capture system

A methodology for turning these inputs into an LCOE and cost per ton of CO_2 captured is contained in Attachment 3 of the FOA (DE-FOA-0000403) included as Exhibit B of this report.

Barr used this methodology to calculate the following parameters described by the FOA.

- Parasitic power losses
- LCOE
- Cost of CO_2 capture—$/ton
- Percentage decrease in PC plant efficiency

8.2 Parasitic Power Losses

Parasitic power losses as defined by the FOA are described below:

- Power loss due to carbon capture system auxiliary systems, such as inlet blower, exhaust blower, conveyors, pumps, cooling systems, and miscellaneous systems;
- Power loss due to the motor associated with the CO_2 compression system; this is the largest single electrical user in the carbon capture system; and
- Power lost due to the steam requirements of the carbon capture system. CACHYS™ uses IP steam from the steam turbine for direct and indirect heating of the sorbent regenerator. CACHYS™ also returns LP steam to the steam turbine from a heat-recovery loop in the carbon capture system.

For comparison purposes, Case 12 from the DOE report was also calculated. Note the effect of the reduced CACHYS™ steam requirements lessening the Equivalent Power of Steam Use. The results of the calculations are shown in Table 8.1.

Table 8.1 Parasitic Power Losses

Category	Case 12 (MW)	CACHYS™ (MW)
CO_2 Capture System Auxiliaries	20.6	15.1
CO_2 Compression	44.9	39.9
Equivalent Power of Steam Use	156.7	46.2
Total Power Loss	**222.2**	**101.2**

8.3 Levelized Cost of Electricity and Steam

The FOA provides baseline costs for steam and electricity without CO_2 capture. The following equations were used to calculate the levelized cost of steam and electricity. Costs for Case 12 and CACHYS™ were calculated using the following formulas:

Cost of electric power (mills/kWh) = 0.3073 x (total power loss in MW_e) + 64

Cost of steam ($/1000 lb) = 0.0280 x (total power loss in MW_e) + 5.83

The results of the calculations are shown in Table 8.2.

Table 8.2 Levelized Cost of Electricity and Steam

	Base Case FOA Appendix 3	Case 11 DOE Report	Case 12 FOA Appendix 3	CACHYS™ FOA Appendix 3	% Increase Over Base Case FOA Appendix 3
Electricity (mills/kWh)	64.0	74.7	132.28	95.1	48.6
Steam ($/1,000 lbs)	5.83	NA	12.05	8.66	48.5

8.4 Cost of Carbon Dioxide Capture ($/ton)

The FOA outlines the methodology for calculating the cost of CO_2 capture expressed in $/ton. The inputs are described below:

- Total O&M costs—this item is composed of both fixed and variable components (see Section 7). The largest component is approximately $15 million per year for the sorbent;

- Capital charge for the CO_2 system—this item represents the yearly cost recovery needed to support the capital investment as shown in the equation below; and
- CO_2 captured in tons using the PFD.

The capital Charge [$/yr] is equivalent to the Capital Charge Factor multiplied by the Capital Cost, where:

- Capital Charge Factor = 17.5% per year; and
- Capital Cost = $672.8 million.

The results are shown in Table 8.3.

Table 8.3 Cost of CO_2 Capture Summary

	Cost Per Year
Total O&M	$18,995,000
Capital Charge	$117,740,000
Total Cost	$136,735,000
	Tons Per Year
CO_2 Captured	4,405,200
	Cost Per Ton
Cost of CO_2 Capture	$31.04/ton

8.5 Pulverized Coal Plant Efficiency

Barr used Case 12 from the report Cost and Performance Baseline for Fossil Energy Plants, Volume 1, Revision 2, dated November 2010 as a reference for comparison purposes. The results of the comparison are shown in Table 8.4.

Table 8.4 Plant Efficiency Summary

	Thermal Efficiency (HHV)
Base Efficiency Case 12	28.4 %
Efficiency CACHYS™	34.6 %
Percentage Point Increase	6.2%

9.0 Sensitivity Cases

9.1 Sensitivity Cases

Three sensitivity cases were run subsequent to the CACHYS™ Base Case being developed. The three cases are:

- Reducing the net output to 550,000 kWe
- Doubling the amount of steam used to regenerate the CACHYS™ sorbent
- Reducing the value of the spent sorbent from $0.50/lb to $0/lb

The first sensitivity case reduced the net power output to 550,000 kWe. The CACHYS™ Base Case was developed at a net output of 670,400 kWe. To be consistent with other DOE studies, cases were developed representing a net output of 550,000 kWe.

The results comparing the CACHYS™ Sensitivity Case to DOE Case 12 are shown in Table 9.1.

Table 9.1 Sensitivity Case Summary

	Case 12	**CACHYS™ Sensitivity Case – 550,000 kWe net**
Steam Turbine Power (kWe)	662,880	634,340
Net Power (kWe)	549,970	550,000
Equivalent Steam Use (kW)	156.7	37.9
Net Plant Efficiency % (HHV)	28.4	34.6
LCOE (mills/kWh)	132.8	89.5

The second sensitivity represent a case in which the sorbent material requires more steam than expected, it was decided to double the amount of indirect steam required to regenerate the sorbent

from 625 MMBtu/hr to 1250 MMBtu/hr. For the CACHYS™ Base Case (670,400 kWe), this raised the LCOE by approximately 13%. This case was not run at the 550 MW level, but the effect would be very similar.

The third sensitivity case reduced the value of the spent sorbent to $0/lb. A set of sensitivity runs were conducted for both the CACHYS™ Base Case and 550 MW Case related to the value of the spent sorbent. The Base Case assumed the sorbent had a residual value of $0.50/lb and in the Sensitivity Case it was assumed to have zero value.

The assumption raised the estimated cost of CO_2 capture from $31.04/ton to $34.42/ton for the Base Case. The assumption raised the estimated cost of CO_2 capture from $32.81/ton to $36.19/ton for the 550 MW Case.

Exhibit A: Process Flow Diagram and Stream Tables

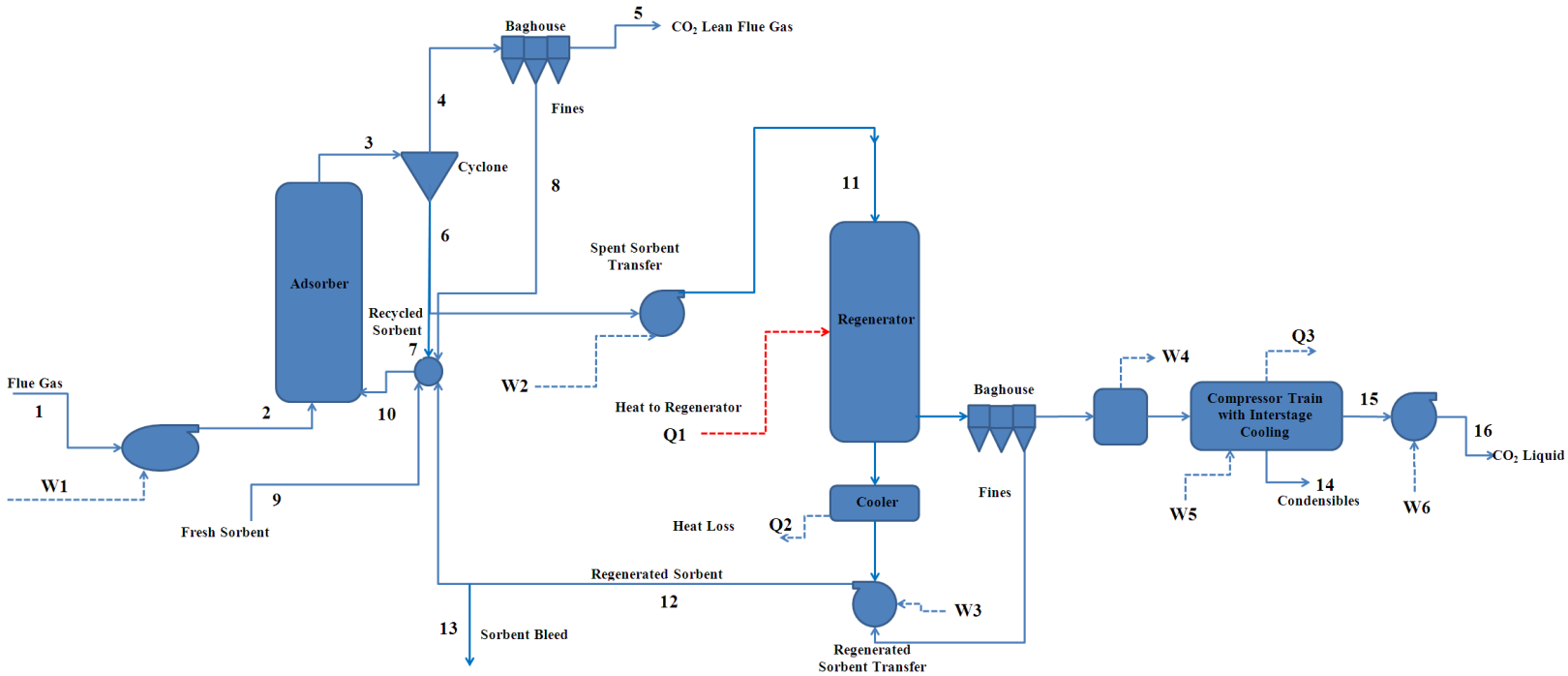

Stream Number	1	2	3	4	5	6	7	8
Identity	Flue Gas	Pressurized Flue Gas	Spent Sorbent and CO_2 lean Flue Gas	CO_2 Lean Flue Gas	CO_2 Lean Flue Gas to Stack	Separated Spent Sorbent	Recycled Sorbent	Sorbent Fines Balance to Regenerator
Flow [lbm/hr	6517745	6517745	20079737	5817935	5441142	14694916	1469492	376793
Temp [°F]	136	159	186	185	185	185	185	185
Pressure [psia]	14.7	16.9	14.7	14.7	14.7	14.7	14.7	14.7

Stream Number	9	10	11	12	13	14	15	16
Identity	Fresh Sorbent	Total Sorbent to Adsorber	Spent Sorbent to Regenerator	Regenerated Sorbent	Sorbent Bleed	Total Flashed liquids after Stage 4 Compression	Compressed Liquid CO_2 Stream	Pumped CO_2 Stream
Flow [lbm/hr	20000	13995105	13225424	11978715	20000	30803	1204047	1204047
Temp [°F]	136	138	185	136	136	86	86	87
Pressure [psia]	14.7	14.7	14.7	14.7	14.7	103	1124	2214

Q1	Q2	Q3	Q3	Q4	W1	W2	W3
-897.7	284	284.2	201.6	-100.6	-15094	-1837	-1837
MMBTU/hr	MMBTU/hr	MMBTU/hr	MMBTU/hr	MMBTU/hr	hp	hp	hp
W4	W5	W6	Heat Recovery From Regenerator in Form of Power	Heat Duty for Regeneration	CO_2 Captured and Compressed		Heat Duty for Regeneration
19392	-51493	-2891	14460.6	897.7	27358.5	12420753.0	76.20
hp	hp	hp	kW	MMBTU/hr	lbmol CO_2/hr	mol CO_2/hr	kJ/mol CO_2

Exhibit B: Levelized Cost of Electricity

ATTACHMENT 3 – Basis for Technology Feasibility Study

The Technical and Economic Feasibility Study required as a deliverable in the Statement of Project Objectives for Areas of Interest B1, B2, and B3 must include:

- General process flow diagram identifying all major process equipment for the combined CO_2 capture and compression system, including separation vessels, heat exchangers, pumps, compressors, etc.
- Material and energy balances around the combined CO_2 capture and compression system and around all major pieces of equipment there in, including all heating and cooling duties, and electric power requirements
- Complete stream tables showing operating pressures, temperatures, compositions, and enthalpies for all streams entering or leaving major process equipment
- Cost estimates for all major process equipment and/or process consumables, to include preliminary manufacturing cost estimates for new or unique materials and/or equipment

It is considered critical that qualified individuals or organizations with professional experience in performing this type of work conduct the feasibility study. *This activity should not be considered a training exercise for graduate students or inexperienced junior engineers.*

Assumptions and methodology to be used for the study are discussed below.

<u>System Boundaries:</u>

1) Flue gas entering capture system from existing flue-gas desulfurization system (FGD)[1], through high-pressure, high-purity CO_2 stream crossing plant fence
2) Parasitic electricity from PC plant generators
3) Low-pressure (LP) steam at steam turbine extraction conditions
4) Cooling and process water services
5) Waste streams generated in the CO_2 capture and compression systems should be identified and any special treatment requirements included

A schematic identifying system boundaries is shown below:

[1] Proposed concepts may include pretreatment options for flue-gas sulfur reduction, dehydration, etc., but all experimental work must be focused on the CO_2 capture aspects of the technology, and the CO_2 capture technology must be viable when considered with existing flue-gas desulfurization and other environmental control systems.

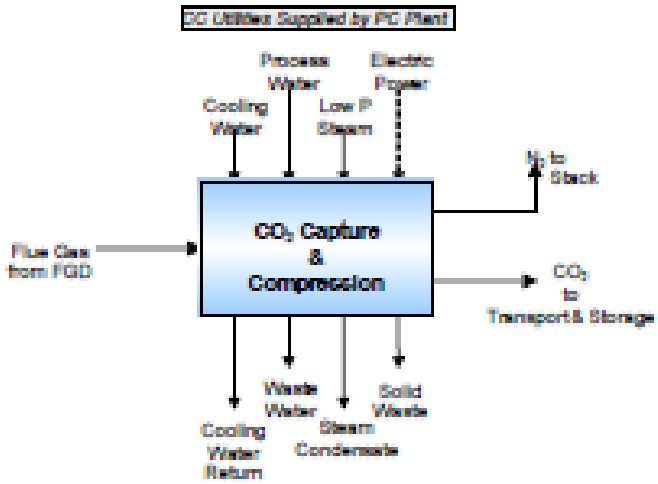

Process Design Assumptions:

1) Composition of flue gas leaving FGD (wet basis):

	vol%
CO_2	13.17
H_2O	17.25
N_2	66.44
O_2	2.34
Ar	0.80
	ppmv
SOx	42
NOx	74

2) Flowrate of flue gas leaving FGD (based on 550 MW net PC plant): 5,118,399 lb/hr

3) Pressure and temperature of flue gas leaving FGD: 14.7 psia, 135°F

4) Conditions for LP steam available from power plant: 167.7 psia, 743.3°F

5) Conditions for cooling water: feed – 60°F, return – 80°F, min. approach – 30 F°

6) CO_2 Removal from flue gas: greater than 90%

7) CO_2 Purity: greater than 95 vol%

8) CO_2 Delivery pressure and temperature: 2,215 psia, 124°F

9) Electric Power equivalence of LP Steam: 0.0911 kWh/lb

Economic Analysis Assumptions:

1) Levelized-Cost of Electricity without CO_2 capture: 64 mills/kWh

2) Levelized-Cost of Steam without CO_2 capture: $5.83 / 1,000 lbs

P:\Mpk\04 NDI\R\4101000 Carbon Capture Study-Reg Sept\WorkFlow\REPORT SECTIONS\FOA ATTACHMENT 3.doc

3)	Levelized-Cost of Cooling Water:	$0.12 / 1,000 gal
4)	Levelized-Cost of Process Make-Up Water:	$0.07 / 1,000 lb
5)	Levelized-Cost of Wastewater Treatment:	$0.21 / lb
6)	Levelized-Cost of Solid-Waste Disposal:	$17.87 / ton
7)	Levelized-Cost of Toxic-Waste Disposal:	$89.36 / ton
8)	Levelized-Cost of CO_2 Transport, Storage & Monitoring:	$4.05 / ton CO_2
9)	Plant On-Stream Factor:	310.25 days/yr
10)	Retrofit Factor:	1.0
11)	Plant Location:	generic plant site, U.S. Midwest
12)	Dollar-Year Reporting Basis:	2007
13)	Total Fixed O&M Levelized-Costs:	$995 / calendar day
14)	Levelized Maintenance-Material Costs: (as percentage of initial equipment and materials costs)	2%
15)	Capital Charge Factor: (based on 20-year levelized cost of electricity, LCOE)	17.5%/yr

Additional, information as required may be found in the following references:

Quality Guidelines for Energy System Studies, Office of Systems and Policy Support, NETL, Feb. 2004.

Cost and Performance Baseline for Fossil Energy Plants, Volume 1: Bituminous Coal and Natural Gas to Electricity (Original Issue Date, May 2007), NETL Report No. DOE/NETL-2007/1281, Revision 1, August 2007 – Of particular interest are design cases 9, 10, 11 and 12, which deal with PC power plants.

Process Flow Diagram & Material Energy Balances:

There are no specific software requirements for developing the material and energy balances, or costing out the capture process. However, all material and energy balance calculations must be accurate, and equilibria, physical and thermodynamic properties must be calculated using rigorous models. Similarly, mass and heat transfer models employed must be based upon a rigorous mathematical description of transport phenomena. Overly-simplistic shortcut methodologies may be considered in preparing the preliminary feasibility study but are not acceptable for the updated study to be delivered at the end of the bench-scale project. Methods and models used must be documented in the final report for the project.

Calculated Output from Feasibility Study:

1) Parasitic power losses for 550 MW net plant, due to the addition of CO_2 capture and compression:

{power loss due to capture auxiliaries}
{power loss due to compression requirements}
\+ {equivalent power loss due to LP steam required for capture}
{total parasitic power losses due to capture & compression}

2) Estimated levelized-cost of electric power and steam with CO_2 capture and compression:

{cost of electric power in mills/kWh} = 0.3073×{total power loss in MWe} + 64.00

{cost of steam in $/1,000 lb} = 0.0280×{total power loss in MWe} + 5.83

3) Itemized cost of all installed equipment and materials used in the CO_2 capture and compression process

4) Cost of CO_2 Capture:

{cost of all materials and utilities consumed in the CO_2 system}

{cost of treating or disposing of any effluent streams from the system, including transport, storage and monitoring of CO_2}

{cost of maintenance and materials}

{fixed O&M Costs}

\+ {capital charge for CO_2 capture system}

{total cost of capturing CO_2}

The cost per ton of CO_2 is obtained by dividing this cost by the tons of CO_2 captured by the process.

5) Percentage decrease in PC plant efficiency:

$$\frac{\{\text{total lost power due to } CO_2 \text{ capture}\}}{\{\text{heat content of coal feed (HHV)}\}}$$

	Base Case	CACHYS	
Coal Handling	510	510	
Pulv	3850	3850	
Sorbent	1250	1250	
Ash Handling	740	740	
PA Fan	1800	1800	
FD Fan	2300	2300	
ID Fan	11120	11120	
SCR	70	70	
FF	100	100	
Wet FGD	4110	4110	
BOP	2000	2000	
ST Aux	400	400	
Cond Pumps	560	560	
CW Pumps	10100	9057	Proated up by LP turbine exhaust flow
Ground Water Pumps	910	910	
Cooling Tower Fans	5230	6276	Prorated UP
Transformer Losses	2290	2743.157	
	47940	47798	

Note - Case 12 CW Pump and Cooling Tower include requirements for Amine and need to be recalculated
These loads will be prorated up from Case 11 based on turbine exhaust flow

Case 11 Exhaust Flow	1630000 lb/hr	Note - Case 11 flow shown is incorrect
CACHYS Exhaust Flow	3121000	Estimate
Ratio	1.91472	

	Case 11	CACHYS
CW Load, kW	4730	9057
Cooling Tower Fans, kW	2440	4672

Correct Turbine Exhaust Flow on DOE Heat Balance

Math Check

LP Inlet		2538406						
Minus Heater Drain		472962						
LP Exhaust		**2065444**						
Condenser Flows								
LP Exhaust		2065444						
Drains		485444						
BFP Turbine		223857						
SSR		5301						
Gland Seal		2793						
Total		**2775839**		2775839		0		10793
Heat To Cachys System								
ASPEN Steam 16 Conditions								
	250000	lb/hr						
	335	F						
	105	psia						
	272000000	BTU/hr						
Steam Will Be Supplied by IP Turbine Exhaust								
	207780	lb/hr	Calculated Result - Flow to Cachys System					
		psia						
		F						
	1309.2	BTU/lb						
Net Power Lost by Steam Turbine								
Flow	207780	lb/hr	Calculated Result - Flow to Cachys System					
LP Inlet	1309.2	BTU/lb						
LP Exhaust	1009.5							
MW Lost	-16.2							
Heat From Cachys System								
ASPEN Stream 25 Conditions								
	300000	lb/hr						
	259	F						
	35	psia						
	1167.4	BTU/lb		89.98		89.1		
Net Power Gained by Turbine								
Flow	300000	lb/hr						
Inlet to Turbine	1167.4	BTU/hr						
LP Exhaust	1009.5	BTU/hr						
MW Gained	13.9							
Heat to Cachys System - Indirect Heating Q3								
Q1	625000000	BTU/hr						
Net Power Lost By Turbine								
Flow	477391	lb/hr	Calculated Result					
Inlet to Turbine	1309.2	BTU/lb						
Flow	477391	lb/hr						
Inlet to Turbine	1309.2	BTU/lb						
LP Exhaust	1009.5	BTU/lb						
MW Lost	-41.9							

P:\Mpls\24 MD\18\34181003 Carbon Capture Study-Eng Sup\Work\Tiles\REPORT SECTIONS\Heat Balance Work Sheet Case 12.xlsx

Net Power Gained by Turbine Due to Eliminating Amine Steam								
Flow	1784175	lb/hr						
Inlet to Turbine	1309.2	BTU/lb						
LP Exhaust	1009.5	BTU/lb						
MW Gained	158.7							
Net MW Gained	110.4							
Gross Output	773.2							
Aux Load	47.8		Case 12					
c02 Compression	39.9		ASPEN W8					
Inlet Fans	11.3		ASPEN W1 Calculation					
Exh Fans	2.8	55.0	Ratio assuming 25% pressure drop of inlet fans					
Misc BOP	1.0							
Total Aux Load	102.8							
Net Power	670.4							
Efficiency	0.348							
Heat Rate	9859.1	BTU/kwh						
Heat Rate	10391							
Revised Turbine Flow Calculations								
Base Case LP Inlet		2538406						
Cachys Direct Steam		200000						
Cachys Indirect Steam		535000						
New LP Inlet		**1803406**						
LP Exhaust Flow								
Base Case		2065444						
Cachys Direct Steam		200000						
Cachys Indirect Steam		535000						
From Cachys Steam 25		300000						
New Exhaust Flow		**1630444**						

P:\Mpls\34 ND\18\34181003 Carbon Capture Study-Eng Supt\Work\Ted\REPORT SECTIONS\Heat Balance Work Sheet Case 12.xlsx

	Cachys	Base Case	
Parasitic Power Losses	**MW**		
Capture Auxiliaries	15.1		
Compression	39.9		
Equiv Power of Steam	21.3		
Total Parasitic Power	**76.3**		
LCOE of Steam and Electricity			**% Increase**
Electricity	87.45	64.00	36.64
Steam	7.97	5.83	36.64
Cost of C02 Capture			
Total O&M Costs	$18,995,000		
Capital Charge	$117,740,000		
Total Cost	**$136,735,000**		
Ton of C02 Captured	1183231 lbs/hr		
	591.6155 tons/hr		
	4405169.013 tons/yr		
Cost of C02 Capture	$31.04 $/ton		
Decrease in Plant Efficiency			
Base Efficiency	39.3		
With C02 Capture	31.8		
% Decrease	**0.1808398886**		
DOE Gross Check	9.545454545		

P:\Mpls\34 ND\18\34181003 Carbon Capture Study-Eng Supt\WorkFiles\REPORT SECTIONS\LCOE Calculations.xlsx

Exhibit C: Capital Cost Estimate

Total Plant Cost Summary
CARBON DIOXIDE CAPTURE FROM EXISTING COAL FIRED PLANTS BY HYBRID SORPTION USING SOLID SORBENTS

Acct No.	Item/Description	Equipment Cost	Material Cost	Labor		Sales Tax	Bare Erected Cost	Engineering, Const Mgt, & Contractor's Fee	Contingencies		Total Plant Cost	
				Direct	Indirect				Process	Project	$	$/KW
1	SITEWORK	$0	$661,300	$391,333	$119,386	$0	$1,172,018	$538,116	$0	$513,040	$2,223,175	$3
2	FOUNDATIONS AND CONCRETE	$0	$2,967,390	$4,295,548	$1,310,462	$0	$8,573,401	$3,936,360	$0	$3,752,928	$16,262,688	$24
3	STRUCTURAL	$0	$8,440,000	$3,043,366	$928,454	$0	$12,411,819	$5,698,717	$0	$5,433,161	$23,543,698	$35
4	PIPING, VALVES & SUPPORTS	$0	$5,596,000	$8,555,449	$2,610,050	$0	$16,761,500	$7,695,813	$12,228,656	$11,005,791	$47,691,760	$71
5	FLUE GAS CLEANUP	$43,800,000	$0	$16,927,557	$5,164,168	$0	$65,891,725	$30,253,285	$16,981,775	$33,938,035	$147,064,820	$219
6	SORBENT REGENERATION	$61,630,000	$0	$8,131,323	$2,480,660	$0	$72,241,983	$33,168,919	$52,705,451	$47,434,906	$205,551,260	$307
7	PRECONDITIONING & CO2 COMPRESSION TRAIN	$43,045,000	$0	$1,703,829	$519,795	$0	$45,268,623	$20,784,470	$16,513,273	$24,769,910	$107,336,276	$160
8	SORBENT HANDLING	$3,570,000	$0	$2,135,662	$651,536	$0	$6,357,198	$2,918,821	$2,985,947	$3,678,590	$15,940,556	$24
9	WASTE SORBENT RECOVERY & HANDLING	$16,270,000	$0	$4,889,120	$1,491,546	$0	$22,650,667	$10,399,744	$8,929,545	$12,593,987	$54,573,943	$81
10	BOP EQUIPMENT	$1,230,000	$0	$226,789	$69,188	$0	$1,525,977	$700,632	$556,652	$834,978	$3,618,239	$5
11	ELECTRICAL	$5,361,200	$2,171,120	$5,248,210	$1,601,096	$0	$14,381,626	$6,603,127	$5,171,901	$7,869,282	$34,100,224	$51
12	INSTRUMENTATIONS AND CONTROLS	$4,000,000	$650,000	$1,245,614	$380,005	$0	$6,275,619	$2,881,365	$2,289,246	$3,433,869	$14,880,098	$22
	TOTAL PLANT COST	**$178,906,200**	**$20,485,810**	**$56,793,801**	**$17,326,345**	**$0**	**$273,512,157**	**$125,579,368**	**$118,362,448**	**$155,258,478**	**$672,786,738**	$1,004

Exhibit D: Sensitivity Case Calculations

CACHYS

	Cachys	Base Case	
Parasitic Power Losses:	**MW**		
Capture Auxiliaries	15.1		
Compression	39.9		
Equiv Power of Steam	88.1	46.2	
Total Parasitic Power	**143.1**		
LCOE of Steam and Electricity			**% Increase**
Electricity	107.97	64.00	68.71
Steam	9.84	5.83	68.73
Cost of C02 Capture			
Total O&M Costs	$18,995,000		
Capital Charge	$117,740,000		
Total Cost	**$136,735,000**		
Ton of C02 Captured	1183231 lbs/hr		
	591.6155 tons/hr		
	4405169.013 tons/yr		
Cost of C02 Capture	$31.04 $/ton		
Decrease in Plant Efficiency			
Case 12 Efficiency	28.4		
CACHYS	31.5		
% Increase	**0.10816483**		

P:\Mpls\GH ND\19\24191003 Carbon Capture Study-Eng Supt\Work\Tasks\REPORT SECTIONS\LCOE Calculations Case 12 Sensitivity Cases.xlsx

N

Heat To Cachys System						
ASPEN Steam 18 Conditions						
	250000	lb/hr				
	335	F				
	105	psia				
	272000000	BTU/hr				
Steam Will Be Supplied by IP Turbine Exhaust						
	207760	lb/hr	Calculated Result - Flow to Cachys System			
		psia				
		F				
	1309.2	BTU/lb				
Net Power Lost by Steam Turbine						
Flow	207760	lb/hr	Calculated Result - Flow to Cachys System			
LP Inlet	1309.2	BTU/lb				
LP Exhaust	1009.5					
MW Lost	-18.2					
Heat From Cachys System						
ASPEN Stream 26 Conditions						
	300000	lb/hr				
	259	F				
	35	psia				
	1167.4	BTU/lb		89.96		69.1
Net Power Gained by Turbine						
Flow	300000	lb/hr				
Inlet to Turbine	1167.4	BTU/hr				
LP Exhaust	1009.5	BTU/hr				
MW Gained	13.9					
Heat to Cachys System - Indirect Heating Q3						
Q1	1250000000	BTU/hr				
Net Power Lost By Turbine						
Flow	954782	lb/hr	Caculated Result			
Inlet to Turbine	1309.2	BTU/lb				
Flow	954782	lb/hr				
Inlet to Turbine	1309.2	BTU/lb				
LP Exhaust	1009.5	BTU/lb				
MW Lost	-83.8					
Net Power Gained by Turbine Due to Eliminating Amine Steam						
Flow	1784175	lb/hr				
Inlet to Turbine	1309.2	BTU/lb				
LP Exhaust	1009.5	BTU/lb				
MW Gained	156.7					
Equivalent Steam Use	-88.2					
Net MW Gained	68.5					
Gross Output	731.3					

P:\Mpki\34 NO\18\34181\000 Carbon Capture Study-Eng Supt\Work\Files\REPORT SECTIONS\Heat Balance Work Sheet Case 12 Sensitivity Cases.xlsx

Aux Load	47.8		Case 12			
c02 Compression	39.9		ASPEN W6			
Inlet Fans	11.3		ASPEN W1 Calculation			
Exh Fans	2.8	55.0	Ratio assuming 25% pressure drop of inlet fans			
Misc BOP	1.0					
Total Aux Load	102.8					
Net Power	628.5					
Efficiency	0.325					
Heat Rate	10516.7	BTU/kwh				
Heat Rate	11085					
Revised Turbine Flow Calculations						
Base Case LP Inlet		0				
Cachys Direct Steam		200000				
Cachys Indirect Steam		535000				
New LP Inlet		-735000				
LP Exhaust Flow						
Base Case		0				
Cachys Direct Steam		200000				
Cachys Indirect Steam		535000				
From Cachys Steam 25		300000				
New Exhaust Flow		-435000				

P:\Mpki\24 NOV\10\04\10\003 Carbon Capture Study-Eng Supt\Work\Files\REPORT SECTIONS\Heat Balance Work Sheet Case 12 Sensitivity Cases.xlsx

Exhibit E: Supporting Calculations for 550 MW Net Output Sensitivity Case and Zero Value Sorbent Sensitivity Case

CACHYS 550 MW

Pro Rata Factor	0.820406		
		Cachys	
Parasitic Power Lossess		MW	
	Capture Auxiliaries	12.38812649	
	Compression	32.73418854	
	Equiv Power of Steam	37.90274463	
	Total Parasitic Power	83.02505967	
LCOE of Steam and Electricity			
	Electricity	89.51	
	Steam	8.15	
Cost of C02 Capture		With Sorbent Recovery	Without Sorbent Recovery
	Total O&M Costs	$16,072,642	$28,290,124
	Capital Charge	$102,504,778	$102,504,778
	Total Cost	$118,577,420	$130,794,902
Ton of C02 Captured		970729.4899 lbs/hr	970729.4899 lbs/hr
		485.3647449 tons/hr	485.3647449 tons/hr
		3614025.891 tons/yr	3614025.891 tons/yr
Cost of C02 Capture		$32.81 $/ton	$36.19 $/ton

R