Development of a Supercritical Oxy-combustion Power Cycle with 99% Carbon Capture

Southwest Research Institute® and Thar Energy L.L.C.

- Engineering development, technology assessment, and economic analysis used to evaluate technical risk and cost of a novel supercritical oxy-combustion power cycle
- Optimized cycle couples a coal-fired supercritical oxy-combustor with a supercritical CO_2 power cycle to achieve *40% efficiency at low firing temperature, 650 C*
  - Cycle is limited by TRL of critical components
- COE $121/MWe with 99% carbon capture
  - 49% increase over Supercritical Steam Without Carbon Capture ($81/MWe), *exceeding the 35% target*
  - 21% reduction in cost as compared to Supercritical Steam with 90% Carbon Capture ($137/MWe).
- Phase 1 completed in September 2013, Extended to March 2014 to cover closeout
- Budget $1.25 million
- Ready to demonstrate supercritical oxy-combustor and critical low TRL technologies

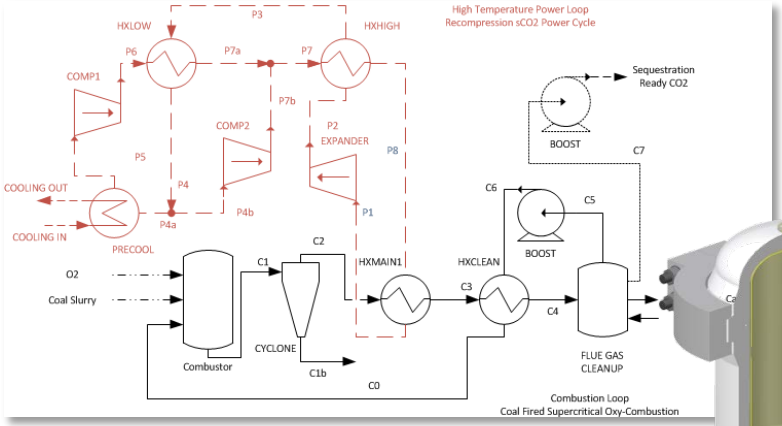

Supported by DOE Project DE-FE0009395

DE-FE0009395

Novel Supercritical Carbon Dioxide Power Cycle Utilizing Pressurized Oxy-combustion In Conjunction With Cryogenic Compression

Project Closeout

Southwest Research Institute ®
and
Thar Energy L.L.C.

Period of Performance: 10/01/2012 – 09/30/2013

Outline

- Project and Participants Overview
- Core Technologies
- Techno-economic Analysis
- Technology Gap Analysis
- Bench Scale Testing
- Path Forward

PROJECT OVERVIEW

Project Scope

- Evaluate a novel supercritical oxy-combustion power cycle for meeting the DOE goals of:
  - Over 90% CO2 removal for less than 35% increase in cost of electricity (COE) when compared to a Supercritical Pulverized Coal Plant without CO_2 capture
- Cycle evaluation based on:
  - Cycle and economic modeling to qualify cost and cycle performance
  - Technology gap assessment to identify critical low TRL components and technologies
  - Bench scale testing to back up cycle models and evaluate state of low TRL technologies
- Propose development path to address low TRL components

Participants

Southwest Research Institute

- Project role
  - Project management
  - Cycle analysis and optimization
  - Bench scale testing
  - Oxy-combustor design
- Key personnel
  - Dr. Klaus Brun
  - Dr. Aaron McClung
  - Dr. Rebecca Owston

Thar Energy LLC

- Project role
  - Technical gap analysis
  - Economic analysis
- Key personnel
  - Dr. Lalit Chordia
  - Mr. John Davis
  - Dr. Rachmadian "Doni" Wulandana

Southwest Research Institute

- Independent, nonprofit applied research and development organization founded in 1947
- Eleven technical divisions
  - Aerospace Electronics, Systems Engineering & Training
  - Applied Physics
  - Applied Power
  - Automation & Data Systems
  - Chemistry & Chemical Engineering
  - Engine, Emissions & Vehicle Research
  - Fuels & Lubricants Research
  - Geosciences & Engineering
  - Mechanical Engineering
  - Signal Exploitation & Geolocation
  - Space Science & Engineering
- Total 2013 revenue of $592 million
  - 38% Industry, 36% Govt., 26% Govt. Sub
  - $6.7 million was reinvested for internal research and development
- Over 2,800 staff
  - 275 PhD's / 499 Master's / 762 Bachelor's

- Over 1,200 acres facility in San Antonio, Texas
  - 200+ buildings, 2.2 million sq. ft of laboratories & offices
  - Pressurized Closed Flow Loops
  - Subsea and High Altitude Test Chambers
  - Race Oval and Crash Test Track
  - Explosives and Ballistics Ranges
  - Radar and Antenna Ranges
  - Fire testing buildings
  - Turbomachinery labs

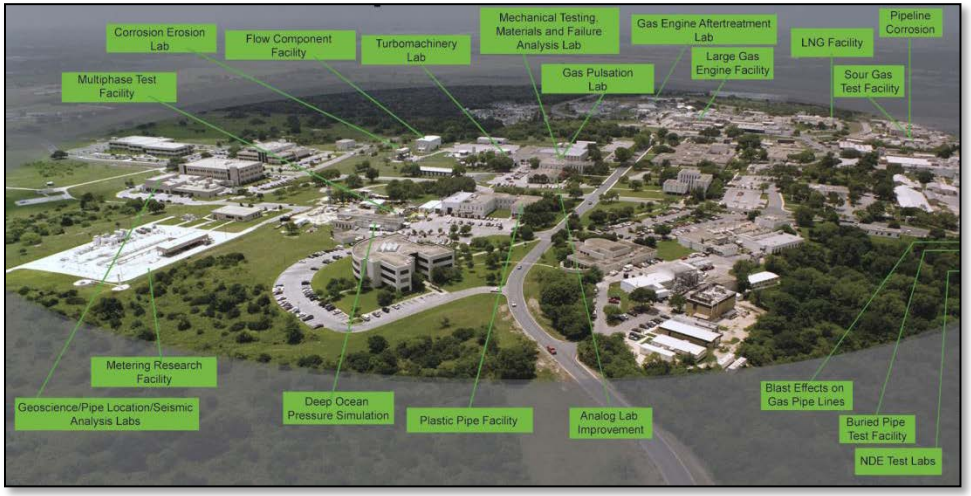

Benefiting government, industry and the public through innovative science and technology

Machinery Program

- Fluids & Machinery Engineering Department
  - Mechanical Engineering Division (18)
- Capabilities
  - Root cause failure analysis
  - Rotordynamic design/audit
  - Pipeline/plant simulation
  - CFD and FEA analysis
  - Test rig design
  - Performance testing
- Current DOE Programs
  - Phase 3 pilot scale CO2 compression demonstration
  - Sunshot sCO2 turbomahinery development and demonstration
  - SunShot high inlet temperature combustor development and demonstration
- Recent Commercial Projects
  - Test stands for LNG and CNG process evaluation
  - Air Cycle Machine Design, Build, and Test
  - Numerical Propulsion System Simulation® (NPSS®) Consortium Management

Thar companies:

Systems for fuel production, power generation and geothermal heating and cooling

Supercritical fluid process design and toll extractions from organic feedstocks

***Core competencies*:**

- **25+ years commercializing "Green" supercritical fluid technologies (SCF)**
- **Designer and developer of supercritical fluid processes, systems & major components**
- **Industrial scale 24/7/365 installations, world wide:**
  - **Food**
  - **Chemicals**
  - **Nutraceutical**
  - **Pharmaceutical**
  - **Chemical**
- **Heat exchangers for high pressure, high temperature application**

Funding

Participant	Type	Project Budget	Cost Share	POC
Southwest Research Institute®	Not for Profit	$ 715,000.00	$ -	Aaron McClung
Thar Energy LLC.	For Profit	$ 535,000.00	$ 250,000.00	John Davis
Project Total		$ 1,250,000.00	$ 250,000.00	

Period of Performance: 10/01/2012 through 09/30/2013

DOE Supercritical Oxy-Combustion Phase I: Development of a Supercritical Oxy-combustion Power Cycle with 99% Carbon Capture

- Optimized cycle couples a coal-fired supercritical oxy-combustor with a supercritical CO_2 power cycle to achieve 40% efficiency at a low firing temperature of 650 C
- COE $121/MWe with 99% carbon capture
  - 49% over Supercritical Steam Without Carbon Capture ($81/MWe), *exceeding the 35% target*
  - 21% reduction in cost as compared to Supercritical Steam with 90% Carbon Capture ($137/MWe).
- Phase I completed in September 2013, budget $1.25 million
- Ready to demonstrate supercritical oxy-combustor and critical low TRL technologies

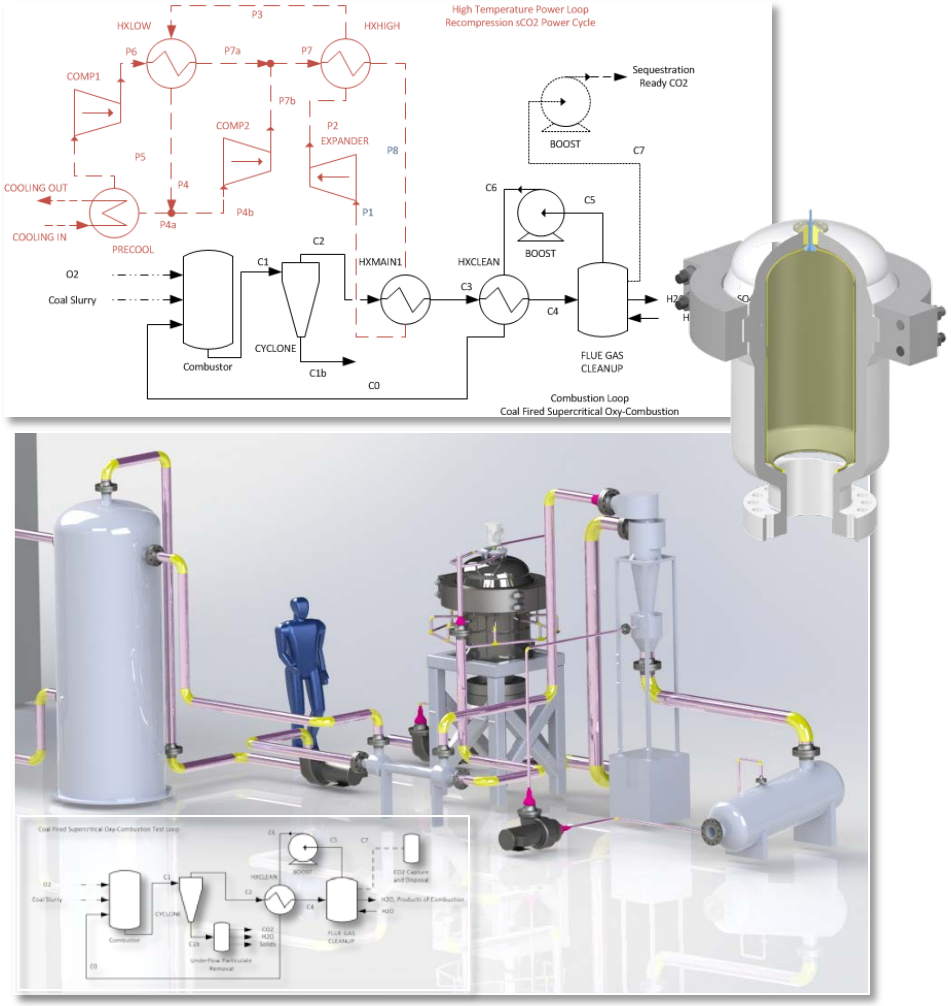

Final Supercritical Oxy-combustion Cycle Configuration

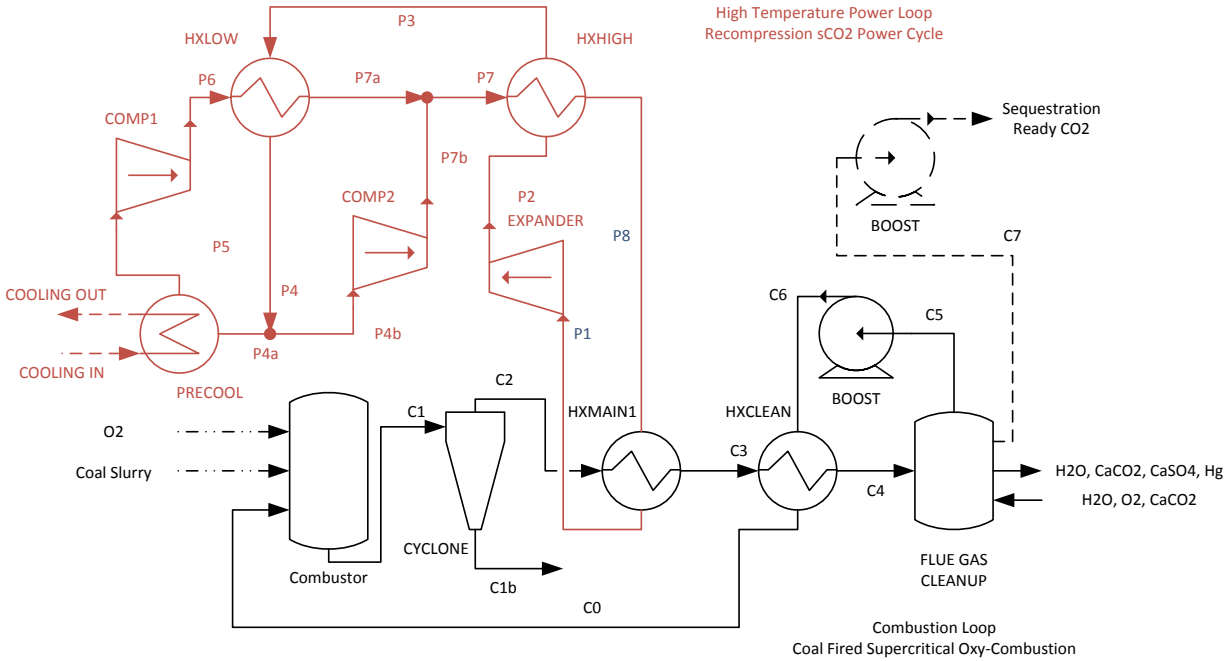

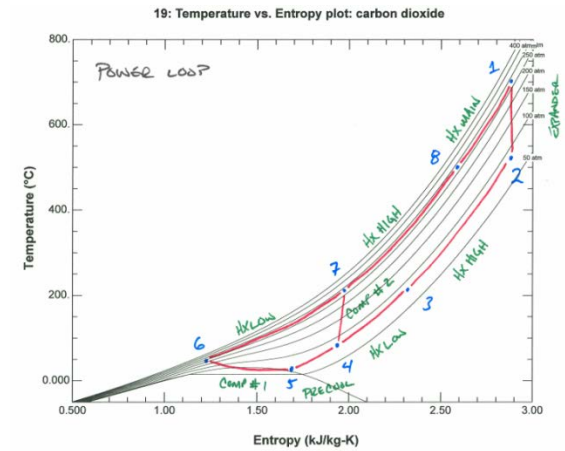

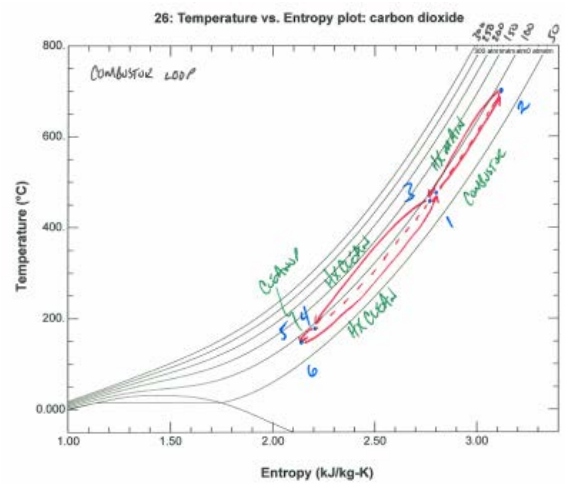

	Power Block	Thermal Loop	Overall
Efficiency [%]	48 Thermal	78.9 HHV / 81.8 LVH	37.9 HHV / 39.3 LHV
CO2 Flow [kg/s]	4887	4930 Recycle	
P high / P low [atm]	290 / 82	100 / 93	
T high / T low [C]	650 / 20	653 / 78	

Combustion Loop TRL

Component/Sub-system	Technology Type	Operating Conditions				Assumed or Specified Performance Characteristics	Assumptions Regarding Anticipated Application Issues	Technology Readiness
		Inlet		Outlet				
		Temperature [C]	Pressure [atm]	Temperature [C]	Pressure [atm]			
Combustion Loop								
Coal Pulverizer	Generic	25	1	25	1	< 9 kw-h/ton		TRL 9
Slury Pump	Generic	25	1	30	92.25	60% Efficiency		TRL 9
Supercritical oxy-combustor	**New vertical flow swirl combustor**	**450**	**95**	**93**	**92.25**	**98+% combustion efficiency**	**Combustor to be demonstrated in Phase 2**	**TRL 6 at the completion of Phase 2 demonstration**
Dry pulverized coal feed	**Supercritical CO2 slurry**	**25**	**1**	**<450**	**110**	**Minimal added water content**		**TRL 2**
Dry pulverized coal feed	**Posimetric Pump**	**25**	**1**	**<450**	**110**	**Dry feed**	**Demonstrated systems can not achieve pressure ratio**	**TRL 4**
Removal of solid products of combustion	**Lock-hopper**	**703**	**92**	**80**	**1**	**Fluid and thermal losses, impact on efficiency unknown**		**TRL 4**
Cyclone Separator	Generic	703	93	703	91	98% Removal 3 atm dP	Materials considerations and thermal insulation for hot gas cleanup	TRL 9
Recouperator (HXMAIN)	Compact micro-channel heat exchanger	703	91	460	88	5 C Pinch Point 3 atm dP	See Note 3	TRL 7, See Note 1
Pre-heater (HXCLEAN)	Compact micro-channel heat exchanger	460	88	162	85	5 C Pinch Point 3 atm dP	See Note 3	TRL 7, See Note 1
Sulfur Cleanup	Under evaluation for hot, high pressure cleanup	162	85	?	?	Under Evaluation to identify technologies compatible with loop conditions	High efficiency requirements drive the need for hot, high pressure cleanup	TRL 5 - 9 depending on cleanup conditions
Water Removal	Under evaluation for hot, high pressure cleanup	162	85	?	?	Under Evaluation to identify technologies compatible with loop conditions	High efficiency requirements drive the need for hot, high pressure cleanup	TRL 5 - 9 depending on cleanup conditions
Boost Pump	Generic	150	80	95			Seals and materials for supercirtical CO2	TRL 9
Air Separation Unit	Cryogenic	30	1	450	93	140 kWh/t for 95% O2 based on literature		TRL 9

Note 1: TRL 7 at the completion of a compantion DOE SunShot Project in 2016 (DE-EE0005804)

Note 2: TRL 7 at the completion of a compantion DOE SunShot Project in 2013 (FC26-05NT42650)

Note 3: Materials and manufacturing assumptions for cost and performance

Note 4: Turbomachinery layout and design is being adressed in other DOE sponsored programs (DE-EE0005804)

Power Loop TRL

Component/Sub-system	Technology Type	Operating Conditions				Assumed or Specified Performance Characteristics	Assumptions Regarding Anticipated Application Issues	Technology Readiness
		Inlet		Outlet				
		Temperature [C]	Pressure [atm]	Temperature [C]	Pressure [atm]			
Power Loop	Supercritical CO2 Recompression Cycle							TRL 7, See Note 1
sCO2 Turbo-expander		650	290	509	86	90+% efficiency	See Note 4	TRL 7, See Note 1
Recouperator (HXHIGH)	Compact micro-channel heat exchanger	509	86	213	84	5 C Pinch Point 3 atm dP	See Note 3	TRL 7, See Note 1
Recouperator (HXLOW)	Compact micro-channel heat exchanger	213	84	70	83	5 C Pinch Point 3 atm dP	See Note 3	TRL 7, See Note 1
sCO2 Pump/Compressor		70	83	190	290	05+% efficiency	See Note 4	TRL 7, See Note 2
sCO2 Pump/Compressor		25	82	60	290	05+% efficiency	See Note 4	TRL 7, See Note 2
Pre-cooler	Compact micro-channel heat exchanger	70	83	25	82	5 C Pinch Point 3 atm dP	See Note 3	TRL 7, See Note 1

Note 1: TRL 7 at the completion of a compantion DOE SunShot Project in 2016 (DE-EE0005804)

Note 2: TRL 7 at the completion of a compantion DOE SunShot Project in 2013 (FC26-05NT42650)

Note 3: Materials and manufacturing assumptions for cost and performance

Note 4: Turbomachinery layout and design is being adressed in other DOE sponsored programs (DE-EE0005804)

Economic Assessment

- Revised* COE of $121/Mwe with 99% carbon capture
  - 49% over Supercritical Steam Without Carbon Capture ($81/MWe), *exceeding the 35% target*
  - 21% reduction in cost as compared to Supercritical Steam with 90% Carbon Capture ($137/MWe).

* COE revised based on feedback from the Phase II Application

Technology Development: Proposed follow on

- 1 MWth Supercritical Oxy-combustor Demonstration
- Test bed for technology development
  - Supercritical oxy-combustor
  - Particulate cleaning of the compact microchannel heat exchanger
  - Solids injection at pressure
  - Solids removal at pressure
- Advance technologies from TRL 2, *Technology Concept*, to TRL 6, *Pilot Scale System Demonstrated in a Relevant Environment*
- Operate with coal water slurry, plan for dry feed or sCO2 slurry extension

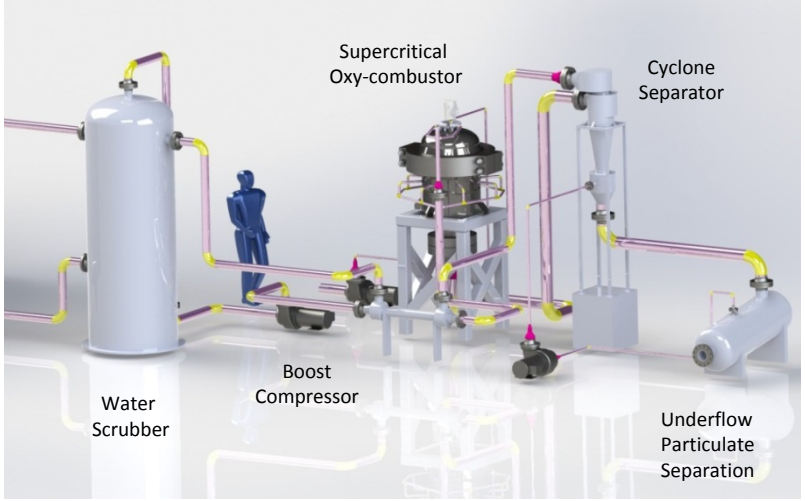

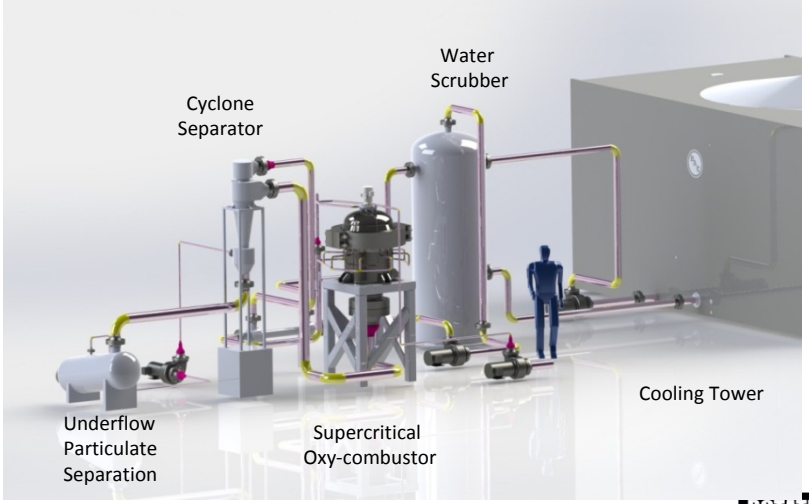

Oxy-Combustion Test Loop

- Major components
  - Charge Compressor or Pressurized CO2 Feed
  - Combustor
    - Oxygen feed
    - Coal slurry feed
  - Cyclone separator
    - Solids removal and handling
  - Recuperater
  - Water scrubber and cleanup
    - Liquid removal and handling
    - CO2 removal and handling
  - Cooling Tower
  - Boost Compressor

- Operating Conditions
  - 450 – 650 C (800 – 1200 F)
  - 102 atm (1500 psi)
- Flow Rates: 1 MWth
  - 3.4 kg/s Hot side flow rate
  - 3.2 kg/s CO2 recycle
  - 0.05 kg/s Coal feed
  - 0.08 kg/s O2 Feed
  - 4.25 kg/s H2O Recycle

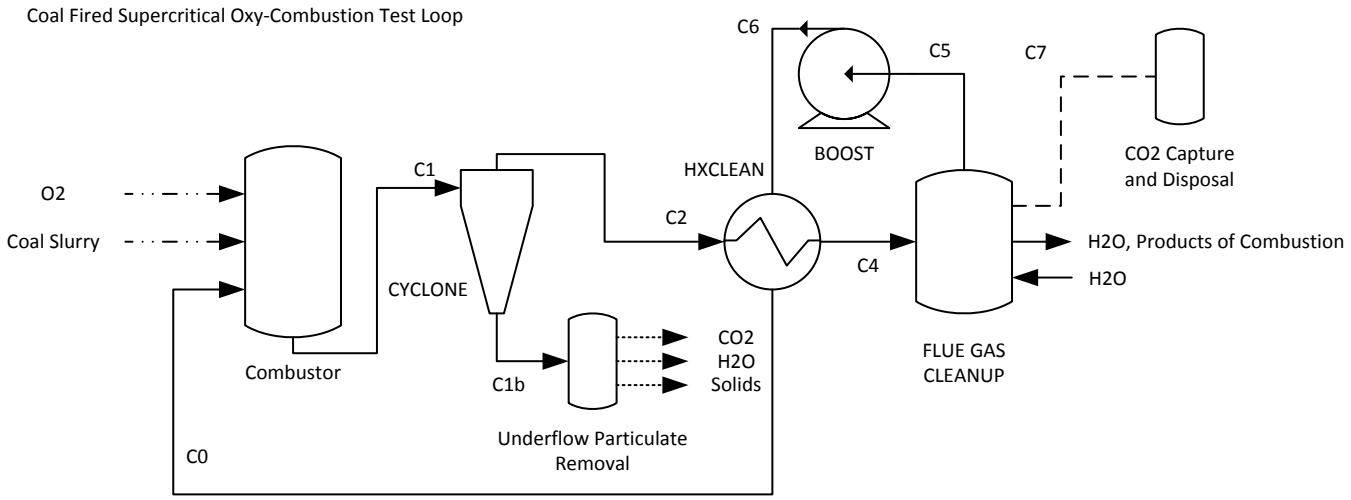

TECHNOLOGY OVERVIEW

Proposed Cycle: Cryogenic Pressurized Oxy-combustion (CPOC)

- Transcritical cycle (gas, liquid, and supercritical states)
- Leverage iso-thermal compression to minimize compression work

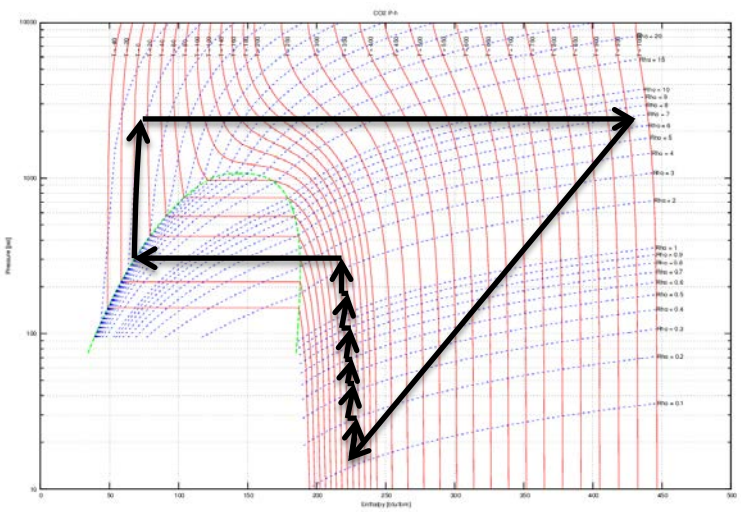

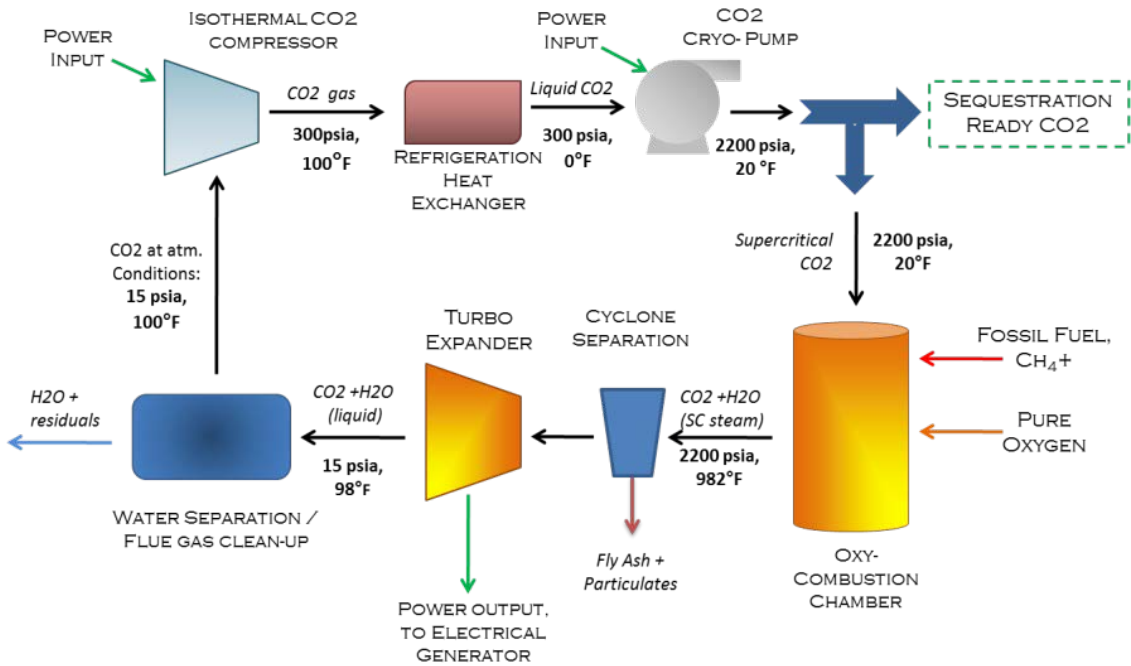

Proposed Cycle: Supercritical Oxy-combustion

- Leverages recent SunShot and DOE-NE cycles development
- Efficiencies up to 60% possible for the power block

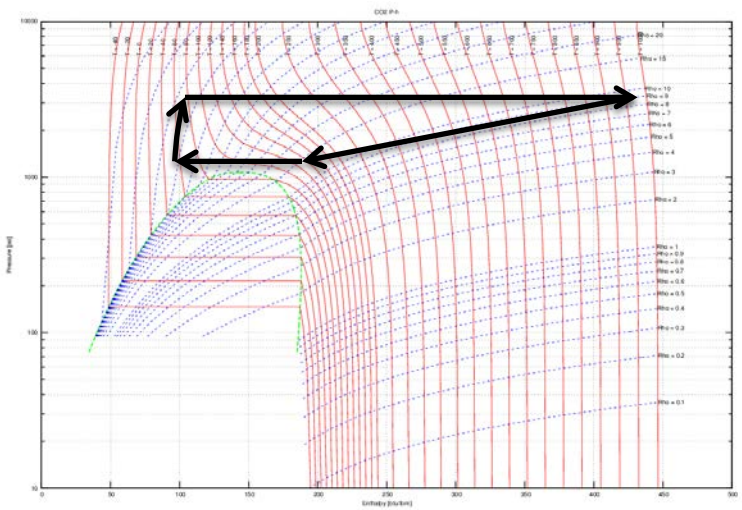

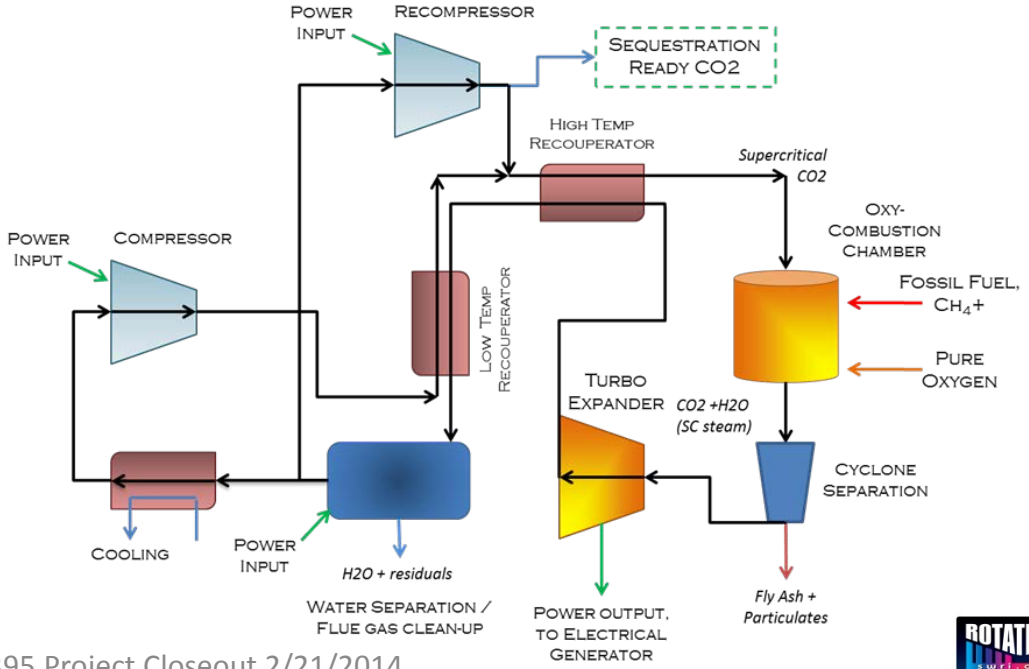

Anticipated Technology Areas

- Primary
  - Pressurized oxy-combustion
    - Negate need for CO2 recompression
    - Increase combustion and cycle efficiencies
- Secondary
  - High-pressure and high-temperature cleanup technologies
    - Required to commercialize a sCO2 oxy-combustion cycle
- Tertiary
  - High efficiency power cycle
    - Must be cost effective to be a viable commercial project
- Unplanned
  - Solid fuel injection at pressure
    - Impact of slurrying agent (water) on efficiency
  - Solid waste removal at pressure
    - Removal of (hot) solid waste under pressure

Direct Fired Cycles

- Managing contaminants
  - Fly ash and particulates (erosion, clogging)
  - Heavy metals (corrosion)
  - Water (corrosion)
  - Gasses (expander performance, corrosion)
- Gas quality
  - Gas composition will vary with fuel and cleanup technology, equipment condition

Indirect Cycles

- Anticipated technology developments contained in the thermal loop
  - High pressure oxy-combustor
  - Cleanup (Fly-ash, Metals, Water, Gases) of supercritical CO2
- Power cycle is *tertiary* for this project
  - Any power cycle can be integrated into dual loop configuration with minimal modification
  - Technology enhancements can be re-integrated into a single loop configuration down the line
- Potential efficiency hit with interface heat exchanger

TECHNO-ECONOMIC ANALYSIS

Approach

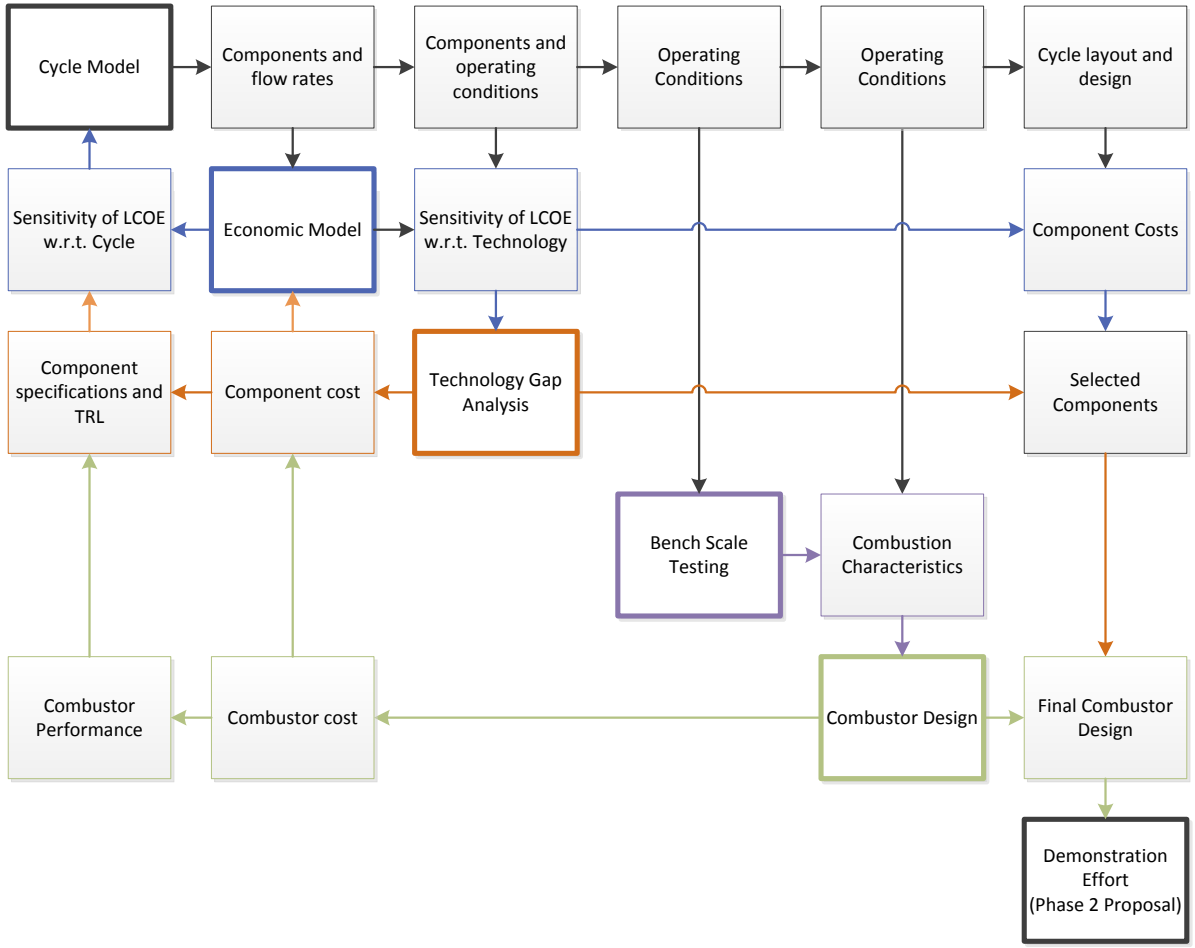
Cycle Model
Components and flow rates
Components and operating conditions
Operating Conditions
Operating Conditions
Cycle layout and design
Sensitivity of LCOE w.r.t. Cycle
Economic Model
Sensitivity of LCOE w.r.t. Technology
Component Costs
Component specifications and TRL
Component cost
Technology Gap Analysis
Selected Components
Bench Scale Testing
Combustion Characteristics
Combustor Performance
Combustor cost
Combustor Design
Final Combustor Design
Demonstration Effort (Phase 2 Proposal)

Analysis Methods

- Cycle models
  - Aspen Plus 7.3.2
  - Power cycle models without combustion for comparison and optimization
  - Optimized cycle with combustion
- Economics
  - DOE Power Systems Financial Model (PSFM)
  - Plant specifics determined by QGESS and FOA
  - Component costs incorporated from Tech Gap Analysis
  - Plant performance determined by cycle analysis
- Technology Gap Analysis
  - Required components determined by initial and optimized cycle layouts
  - Component level technology assessment determined through discussion with vendors and literature search

Cycle Analysis

- Aspen Plus 7.3.2 for cycle performance analysis
  - Mature component specifications from vendor or QGESS Process Modeling Design Parameters
  - Low TRL component data from engineering assessment
- Evaluated baseline power block performance of the two proposed cycles
- Incorporated combustion model into selected cycle
- Optimize cycle configuration for high efficiency, low cost

CPOC Power Block

CPOC w/out Combustion

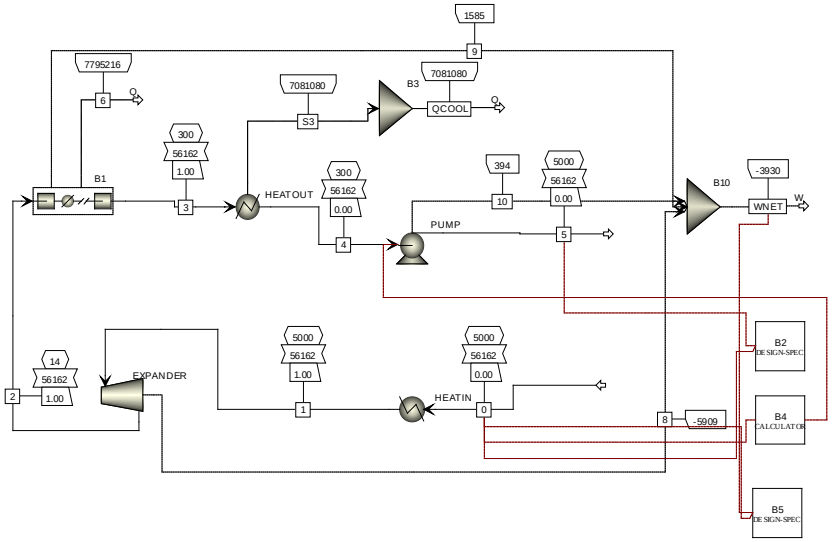

Thermal Efficiency

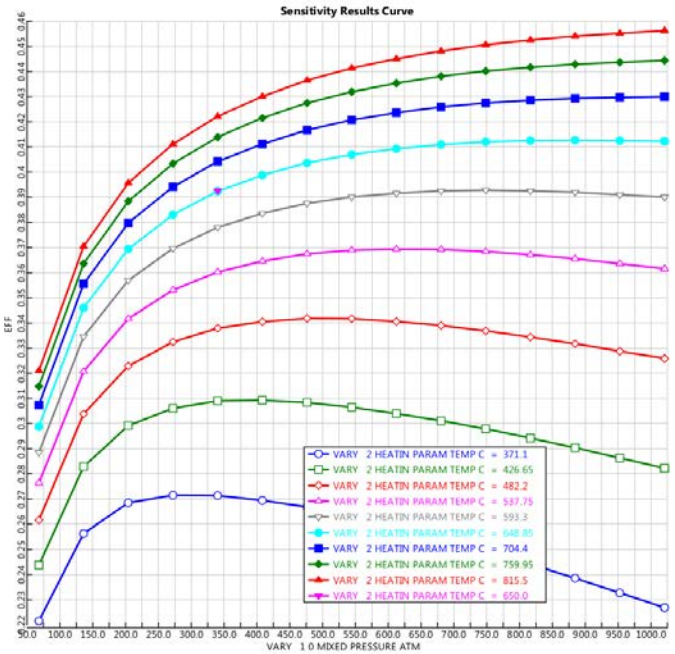

sCO2 Recompression Power Block

sCO2 w/out Combustion

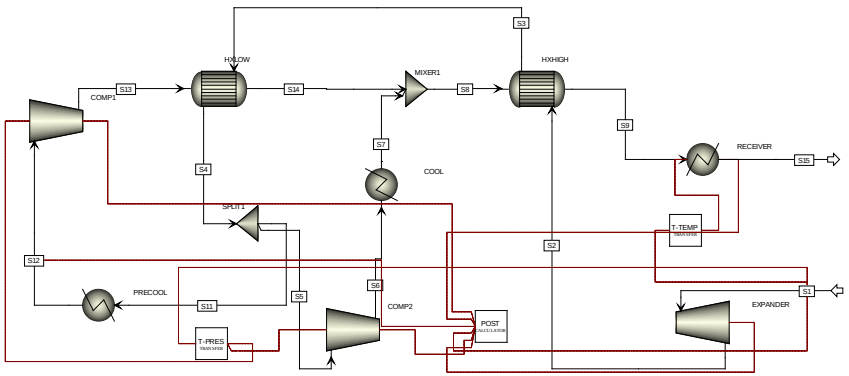

Thermal Efficiency

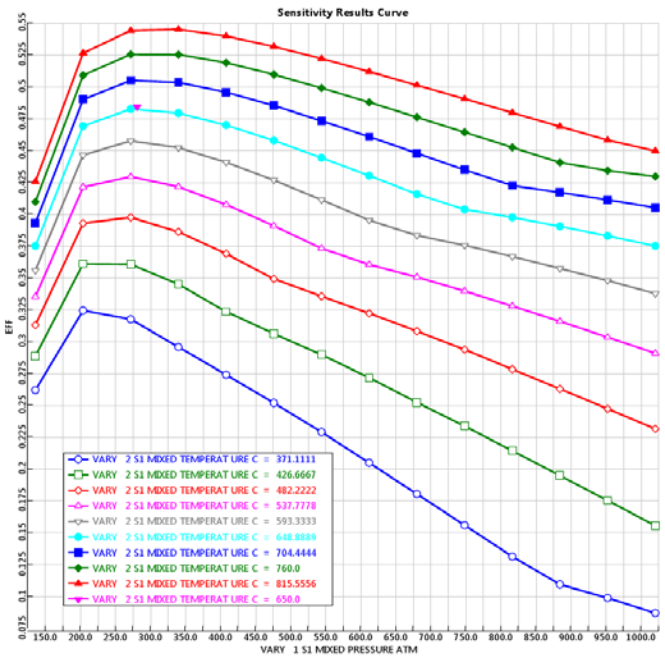

Cycle Layout Challenges

- Recuperated sCO2 power block has a narrow thermal input band
  - Change in temperature across power block is only 250 C
  - Minimize thermal losses through the system
  - Hot combustor inlet
- Gas phase cleanup must occur at low temperature to condense water, remove sulfur, condensable gasses
- Particulate removal prior to gas turbine (direct) or interface heat exchanger (indirect)
  - Leads to hot particulate removal
  - Particulates are at pressure, must be removed to ambient conditions
- Combustor operating pressure
  - Direct fired combustor must operate at high side turbine pressure, 270 atm
  - Indirect fired combustor can operate at reduced pressure, above75 atm
  - Higher pressure required advanced pulverized coal injection technologies
- Indirect cycle incurs efficiency penalty due to interface heat exchanger
- Coal-water slurry feed has significant efficiency impact depending on water content
  - Losses due to heat of vaporization are not recoverable

Indirect Cycle Model with Supercritical Oxy-Combustor

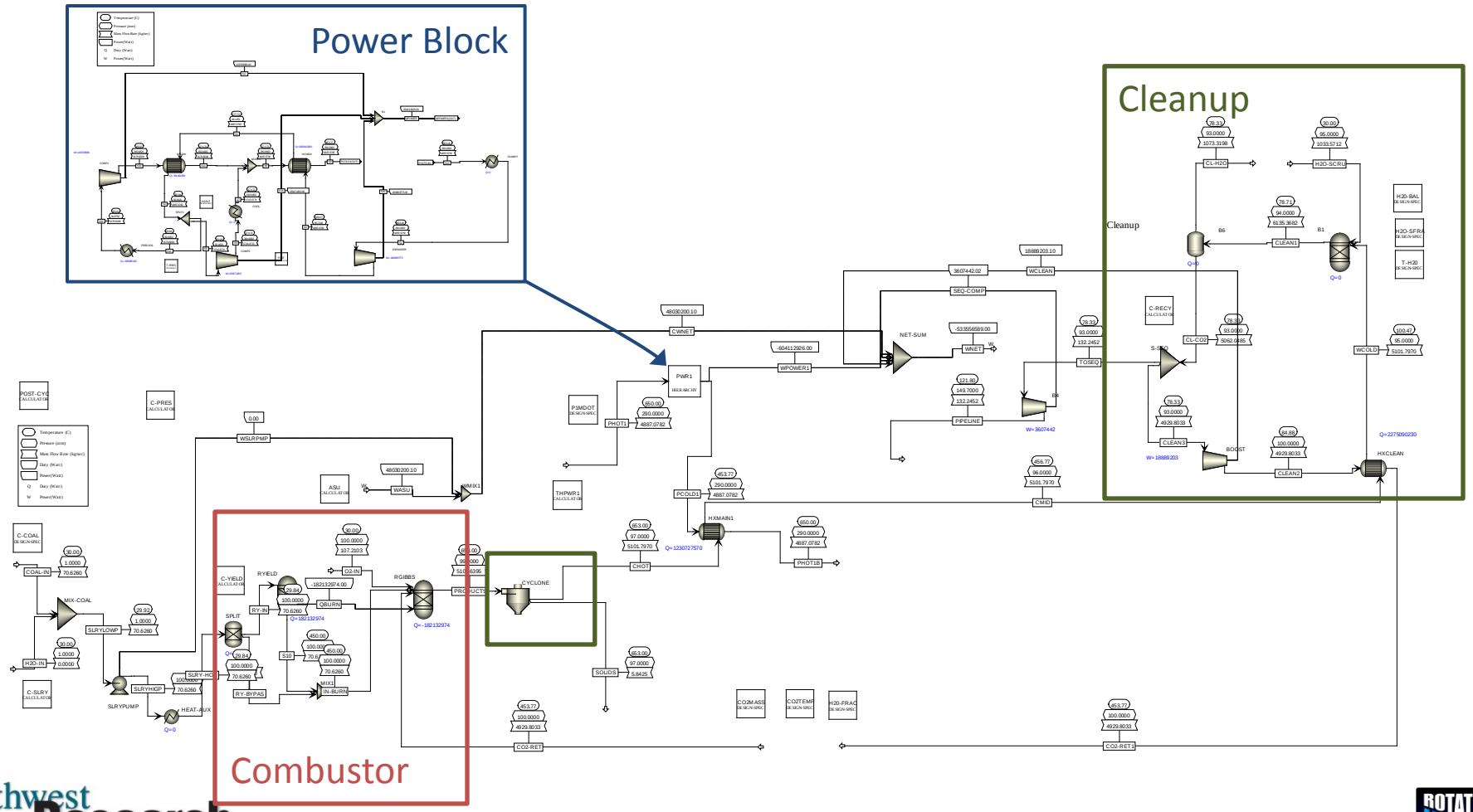

Final Supercritical Oxy-combustion Cycle Configuration

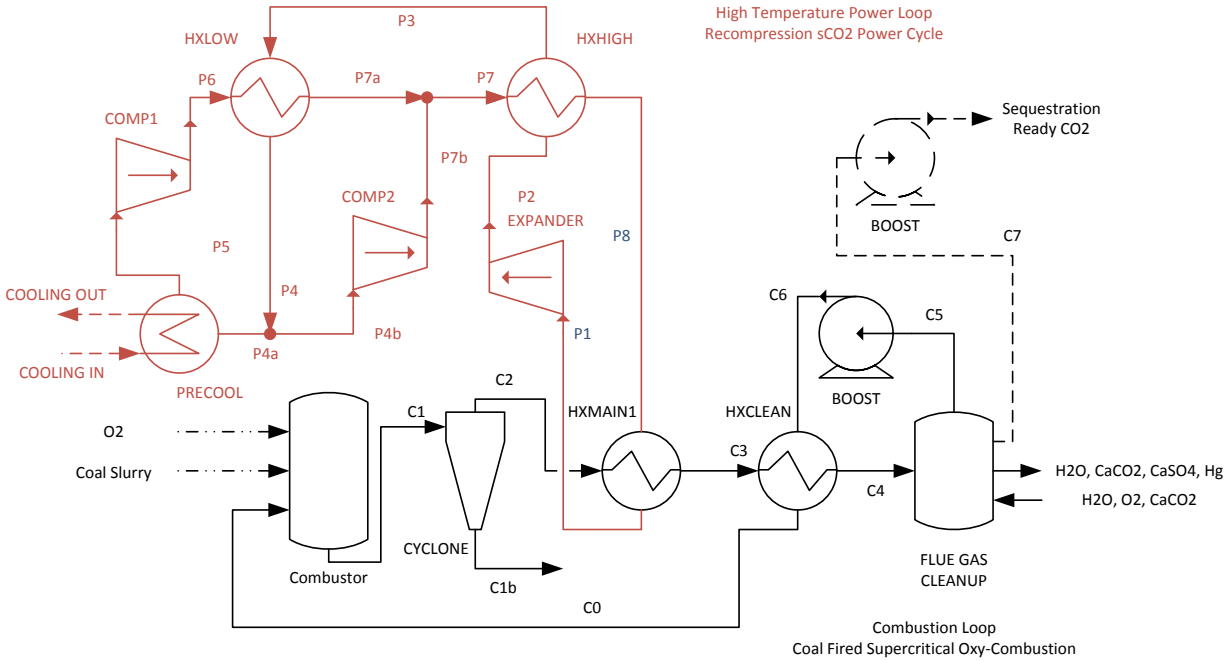

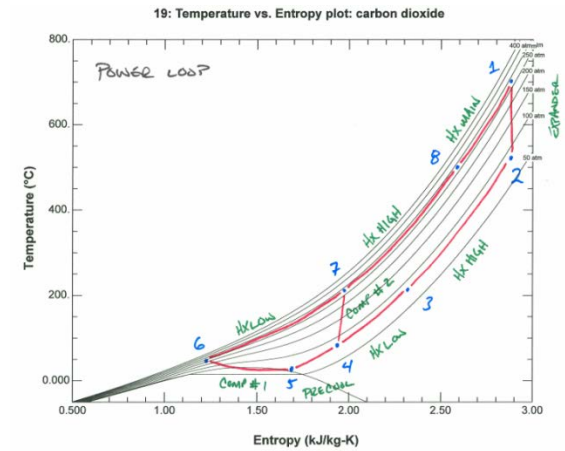

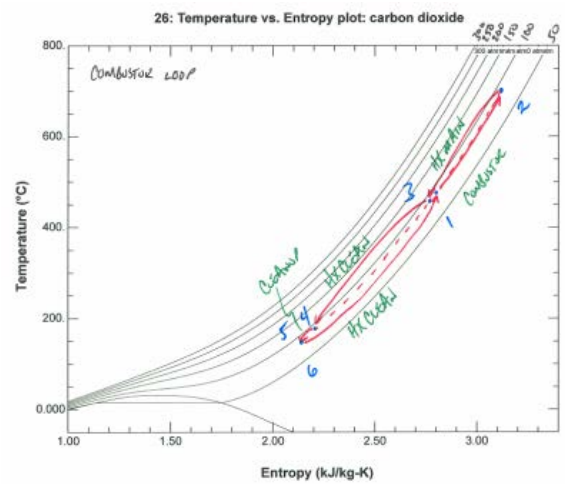

	Power Block	Thermal Loop	Overall
Efficiency [%]	48 Thermal	78.9 HHV / 81.8 LVH	37.9 HHV / 39.3 LHV
CO2 Flow [kg/s]	4887	4930 Recycle	
P high / P low [atm]	290 / 82	100 / 93	
T high / T low [C]	650 / 20	653 / 78	

Economic Assessment

- Reported COE of $162/MWe with 99% carbon capture in June 2013
- Revised* COE of $121/Mwe with 99% carbon capture
  - 49% over Supercritical Steam Without Carbon Capture ($81/MWe), *exceeding the 35% target*
  - 21% reduction in cost as compared to Supercritical Steam with 90% Carbon Capture ($137/MWe).

* COE revised based on feedback from the Phase II Application

Revisions to COE Calculation

- Per DOE Feedback
  - Revise coal cost from $10.25/ton to $36.57/ton in calculating TOC (based on 2012 QGESS Feedstock Costs)
  - Installation factor should not have been applied when calculating BEC
- Changes to match analysis
  - Revise initial fuel requirements for calculating TOC based on predicted 39% HHV plant efficiency, reduce inventory from 6102 ton/d to 5000 ton/d

Estimated equipment costs, 550 MW pressurized oxy-combustion power plant, single power block

Process equipment	Base cost $ Million	Units operating	Spare cost $ Million	Spares on hand	Total $ Million
Core systems					
Cyclones, inc. linings, peripherals	$53	18			52.7
- Spare cyclones			2.9	2	5.9
FGD, inc. metals removal	$45	1			45.0
-- Spare scrubber		6	1.7	1	1.7
-- Spare hydrocyclone		12	0.1	2	0.2
Piping, combustion side	$30	1			29.9
ASU ex pumps	$160	4			160.0
-- Standby ASU spare			40.0	1	40.0
Pumps for liq. O2	$6	8			6.0
-- Spare pump			0.8	1	0.8
Coal slurry preparation	$2	1	2.0	1	4.4
SunShot power loop @ $1,200/kWe	$660	1	66.0	1	726.0
HXs, combustion side	$140	8			140.1
-- Spare HX			17.5	2	35.0
Combustor, No spare	$68	1	68.0	0	67.7
1st Subtotal (BEC), Core systems	$1,164				1,315.3
Support facilities*					
Coal receiving					24.4
Coal crushing					16.6
Ducting and stack					21.3
Ash handling					6.5
Accessory electric plant					32.2
Instrumentation & control					12.1
2nd Subtotal (BEC), Ancilliary systems					113.1
Total BEC, equipment					1,428.4

** Numbers drawn from NETL Bituminous Coal Utility study, 2012 update, Case 12 (PC with sequestration)*

Capital costs according to PSFM guidelines (in red)

From Tech Gap analysis

Capital cost category	Basis	Factor	Totals for: Portion $ Million	Cumulative $ Million	
BEC - Bare Erected Cost					
Process equipment **	Itemized cost summary		1,315.30		
Support facilities ***	NETL, 2012 update, Case 12		113.1		
Total BEC			1,428.40	1,428.40	
EPC - Engineering Project Costs					
Total EPC portion	0-10% BEC, "process in use"	10%	142.84	**1,571.24**	*
TPC - Total Project Costs					
Process cost	5-20% of process capital	20%	314.248		
Project cost	15-30% of BEC+EPC+process cost	30%	471.372		
Total TPC portion			785.62	2,356.86	
TOC - Total Overnight Cost					
Royalties	Assume zero		0		
Pre-production	Gross estimate		1		
- 6 mos labor	Included in gross estimate				
- 1 mo maintenance materials	Included in gross estimate				
- 1 mo non-fuel consumables	Included in gross estimate				
- 1 mo waste disposable	Included in gross estimate				
Working capital	Accounted for in PSFM model				
Inventory capital:					
- Spare parts	0.5% of cum TPC	0.50%	19.4		
- Initial fuel (60 days)	5,000 ton/d	$36.00	13.34		
- Initial CaCO3 (60 days)	1.45 kg/s = 3.2 lb/s makeup	$0.20	0.1		
Land, for PC-type utility	300 acres	3,000	0.9		
Financing - cost of securing it	Percent of TPC	2.70%	105		
Other owner's costs	Percent of TPC	15%	583.4		
Total Owner's cost			722.14	3,079.00	
TASC - Total As-Spent Capital					
Escalation while expending capital	Accounted for in PSFM model		0		
Interest while expending capital	Accounted for in PSFM model		0		
Total TASC			0	3,079.00	
Analysis:					
TASC by PSFM calculation				2,505.12	* *
		w/ TS&M	w/ TS&M		
Benchmark COE	*Case 11, 2012 update*	80.95	N/A		
Benchmark COE w/ 90% CCS	*Case 12, 2012 update*	137.28	147.47		
COE by PSFM	**Includes O&M**	N/A	**121.21**		

* *Cumulative amount goes to Cell B37, "Plant Inputs" page of PFSM workbook*

* *TASC calculation comes from Cell B12 of the "COE Calculation" page of the PSFM workbook*

Operations and maintenance cost in $ thousand

Operations and maintenance cost, $ thousand

Bold items entered on O&M page of PSFM workbook

Cost items	Measure	Rate	$/h	$1,000/y	PSFM page, Cell ID	Source:
Variable costs:						
Labor:						
		$33.3				
Operating labor base rate	$/hr	6	$33.36	69		BLS, NAICS 221100 job category 51-0000, May 2013
Operating labor burden	% of base	30%	$10.01	**21**	B27	Rate from Exhibit 4-13, Case 12, August 2012
Labor O-H charge rate	% of labor	25%	$10.84	23		Rate from Exhibit 4-13, Case 12, August 2012
Subtotal: Operating labor wages	ex burden, per operator			**92**	B26	*Calculated*
Total: Operating labor cost	per operator			113		*Calculated*
Estimated operating laborers		**65**			B25	*Calculation based on Exhibit 4-13 oper. labor cost*
Administrative and supervisory	Total			1,674		Exhibit 4-13, Case 12, August 2012
Administrative and supervisory	Per operator			**25.56**	B28	*Calculated*
Consumables:						
Water	Total			**3,804**	B31	Exhibit 4-13, Case 12, August 2012
Chemicals	Total			**24,914**	B32	Exhibit 4-13, Case 12, August 2012
Waste disposal	Total			**5,129**	B34	Exhibit 4-13, Case 12, August 2012
Fixed costs:						
Administrative and supervisory	Total			**3,348**	B37	Exhibit 4-13, Case 12, August 2012
Taxes and insurance				**39,025**	B38	Exhibit 4-13, Case 12, August 2012
Maintenance costs	% EPC/yr	3%		**86,527**	B39	Thar assumption
Assumptions and Benchmarks:						
Base hours in year:		2,080				
*Operating labor cost:		$7,384,208				per yr
*Maintenance labor cost:		$12,705,913				per yr (included in overall maintenance percentage)
*Administrative & support labor cost:		$5,022,530				per yr (assume 1/3 variable, 2/3 fixed)
*Property taxes and insurance:		$39,024,956				per yr

* *Benchmarks taken from Exhibit 4-13, Case 12, August 2012*

TECHNOLOGY GAP ANALYSIS

Methodology

- Tabulate components required for the cycle layouts
  - Identify commercially available components
  - Identify relevant technologies, vendors for non-standard or immature components
- Provide component cost and performance feedback to economic and cycle models

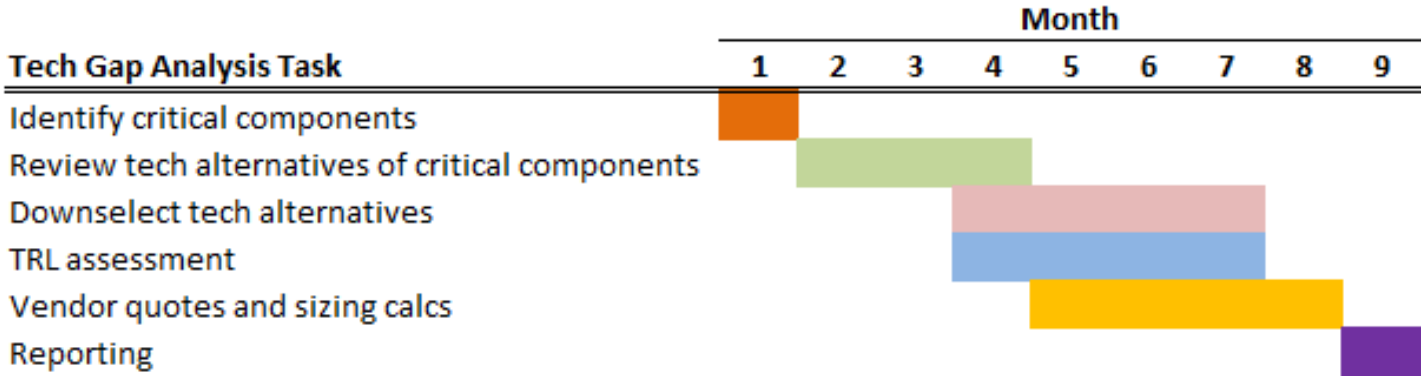

Combustion Loop TRL

Component/Sub-system	Technology Type	Operating Conditions				Assumed or Specified Performance Characteristics	Assumptions Regarding Anticipated Application Issues	Technology Readiness
		Inlet		Outlet				
		Temperature [C]	Pressure [atm]	Temperature [C]	Pressure [atm]			
Combustion Loop								
Coal Pulverizer	Generic	25	1	25	1	< 9 kw-h/ton		TRL 9
Slury Pump	Generic	25	1	30	92.25	60% Efficiency		TRL 9
Supercritical oxy-combustor	**New vertical flow swirl combustor**	**450**	**95**	**93**	**92.25**	**98+% combustion efficiency**	**Combustor to be demonstrated in Phase 2**	**TRL 6 at the completion of Phase 2 demonstration**
Dry pulverized coal feed	**Supercritical CO2 slurry**	**25**	**1**	**<450**	**110**	**Minimal added water content**		**TRL 2**
Dry pulverized coal feed	**Posimetric Pump**	**25**	**1**	**<450**	**110**	**Dry feed**	**Demonstrated systems can not achieve pressure ratio**	**TRL 4**
Removal of solid products of combustion	**Lock-hopper**	**703**	**92**	**80**	**1**	**Fluid and thermal losses, impact on efficiency unknown**		**TRL 4**
Cyclone Separator	Generic	703	93	703	91	98% Removal 3 atm dP	Materials considerations and thermal insulation for hot gas cleanup	TRL 9
Recouperator (HXMAIN)	**Compact micro-channel heat exchanger**	**703**	**91**	**460**	**88**	**5 C Pinch Point 3 atm dP**	**See Note 3**	**TRL 7, See Note 1**
Pre-heater (HXCLEAN)	**Compact micro-channel heat exchanger**	**460**	**88**	**162**	**85**	**5 C Pinch Point 3 atm dP**	**See Note 3**	**TRL 7, See Note 1**
Sulfur Cleanup	Under evaluation for hot, high pressure cleanup	162	85	?	?	Under Evaluation to identify technologies compatible with loop conditions	High efficiency requirements drive the need for hot, high pressure cleanup	TRL 5 - 9 depending on cleanup conditions
Water Removal	Under evaluation for hot, high pressure cleanup	162	85	?	?	Under Evaluation to identify technologies compatible with loop conditions	High efficiency requirements drive the need for hot, high pressure cleanup	TRL 5 - 9 depending on cleanup conditions
Boost Pump	Generic	150	80	95			Seals and materials for supercirtical CO2	TRL 9
Air Separation Unit	Cryogenic	30	1	450	93	140 kWh/t for 95% O2 based on literature		TRL 9

Note 1: TRL 7 at the completion of a compantion DOE SunShot Project in 2016 (DE-EE0005804)

Note 2: TRL 7 at the completion of a compantion DOE SunShot Project in 2013 (FC26-05NT42650)

Note 3: Materials and manufacturing assumptions for cost and performance

Note 4: Turbomachinery layout and design is being adressed in other DOE sponsored programs (DE-EE0005804)

Power Loop TRL

Component/Sub-system	Technology Type	Operating Conditions				Assumed or Specified Performance Characteristics	Assumptions Regarding Anticipated Application Issues	Technology Readiness
		Inlet		Outlet				
		Temperature [C]	Pressure [atm]	Temperature [C]	Pressure [atm]			
Power Loop	Supercritical CO2 Recompression Cycle							TRL 7, See Note 1
sCO2 Turbo-expander		650	290	509	86	90+% efficiency	See Note 4	TRL 7, See Note 1
Recouperator (HXHIGH)	Compact micro-channel heat exchanger	509	86	213	84	5 C Pinch Point 3 atm dP	See Note 3	TRL 7, See Note 1
Recouperator (HXLOW)	Compact micro-channel heat exchanger	213	84	70	83	5 C Pinch Point 3 atm dP	See Note 3	TRL 7, See Note 1
sCO2 Pump/Compressor		70	83	190	290	05+% efficiency	See Note 4	TRL 7, See Note 2
sCO2 Pump/Compressor		25	82	60	290	05+% efficiency	See Note 4	TRL 7, See Note 2
Pre-cooler	Compact micro-channel heat exchanger	70	83	25	82	5 C Pinch Point 3 atm dP	See Note 3	TRL 7, See Note 1

Note 1: TRL 7 at the completion of a compantion DOE SunShot Project in 2016 (DE-EE0005804)

Note 2: TRL 7 at the completion of a compantion DOE SunShot Project in 2013 (FC26-05NT42650)

Note 3: Materials and manufacturing assumptions for cost and performance

Note 4: Turbomachinery layout and design is being adressed in other DOE sponsored programs (DE-EE0005804)

Critical Components

- Supercritical oxy-combustor for solid fuels
  - Novel, low TRL component
- Compact, micro-channel heat exchanger
  - Initial development under SunShot DE-EE0005804
  - Tolerance to particulate loading and cleaning methods should be demonstrated
- Coal-water slurry feed
  - Water content has large impact on cycle performance
- Particulate removal
  - Represents a technical challenge
  - Potential source for significant thermal and efficiency losses

SwRI Oxy-Combustor Concept

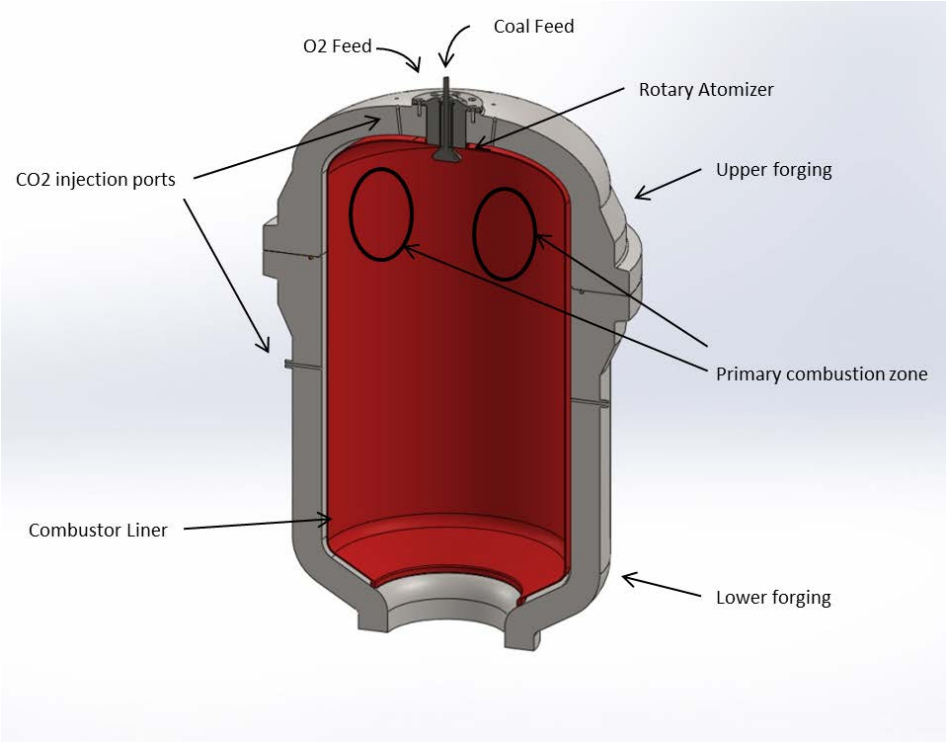

- Pulverized coal + water slurry
  - Recycle water from combustion loop cleanup
  - Water provides flame temperature control
- Rotating impeller fuel injector
  - Optimize shear-mixing of slurry, CO2, and O2
  - Controlled fuel injection rate through impeller, O2 injection controls flame position
- CO2 cooled liner
  - Flame position, diffusion, and dilution control
  - Flame centering
  - Wall temperature buffering

Combustor Design

- Designed to feed a coal-water slurry and O2 into supercritical CO2
  - Inlet Temperature 450 C (842 F)
  - Inlet Pressure 96.5 bar (1400 psi)
  - Firing Temperature 700 C (1292 F)
- Limited data on coal combustion at elevated pressures
- Combustor design through simulation, augmented with coal combustion properties testing
- Flow rates at 550 MWe
  - Coal 50 kg/s
  - O2 80 kg/s
  - H2O 50 kg/s
  - CO2 4000+ kg/s

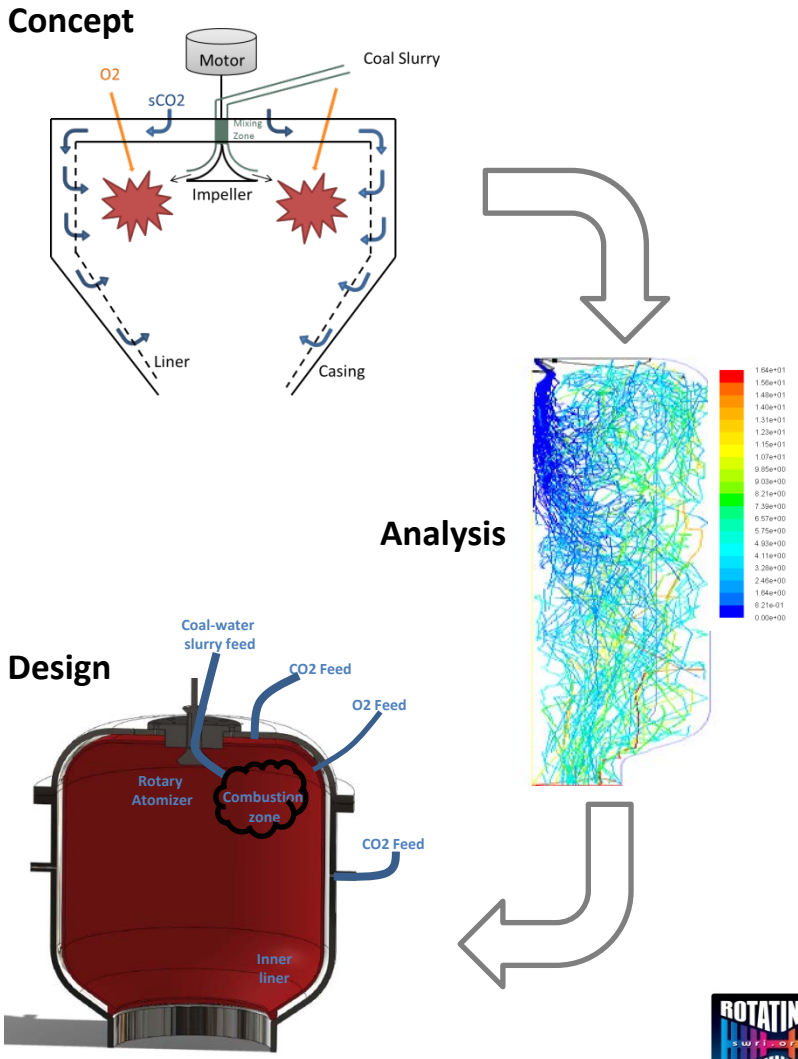

Southwest Research Institute

ROTATING MACHINERY

Coal Slurry CFD Modeling – Particle Physics

Coal Slurry Droplet Physics: DPM (Discrete Phase Model)

- Evaporation (heat transfer via convection and radiation)
- Devolatilization of Coal
- Gas Phase Reactions:
  - $C_{1.18}H_{3.32}O_{0.68}N_{0.0503}S_{0.224} + 1.09O_2 \rightarrow 1.18CO + 1.66H_2O + 0.0251N_2 + 0.0224SO_2$
  - $CO + 0.5O_2 \rightarrow CO_2$

Example: 100 μm slurry particle size (50/50 coal-water, wt. %) using stochastic tracking for turbulent dispersion of particles.

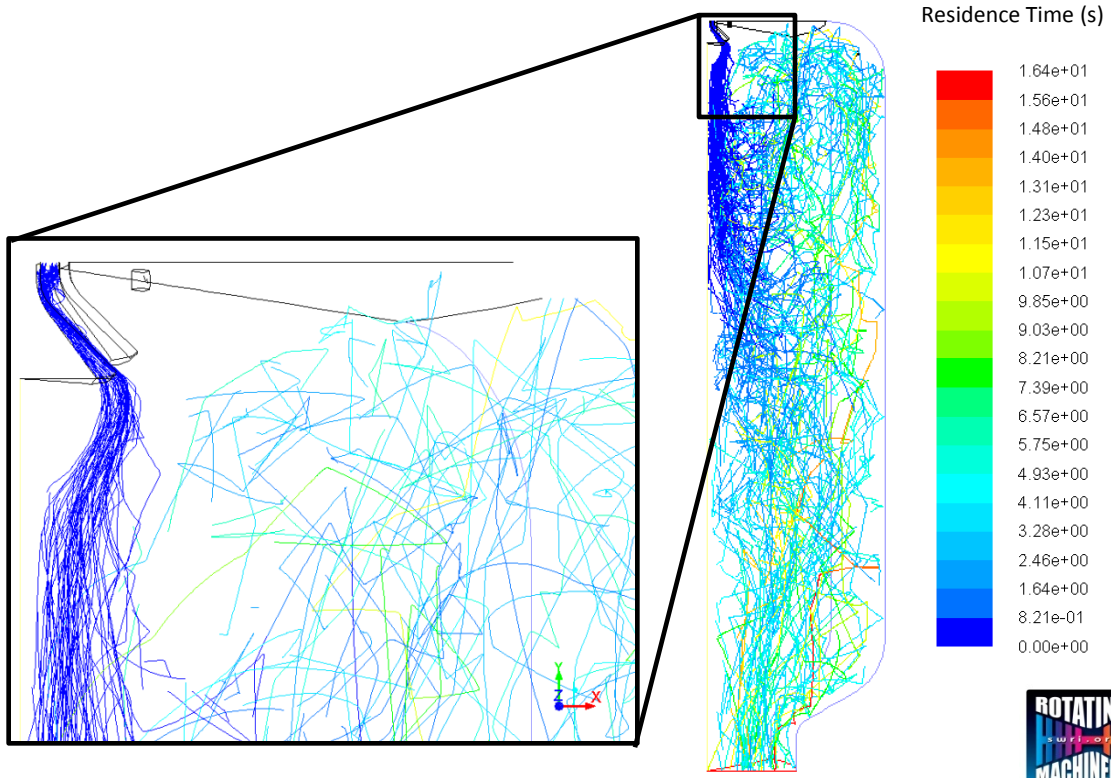

Supercritical Oxy-combustor

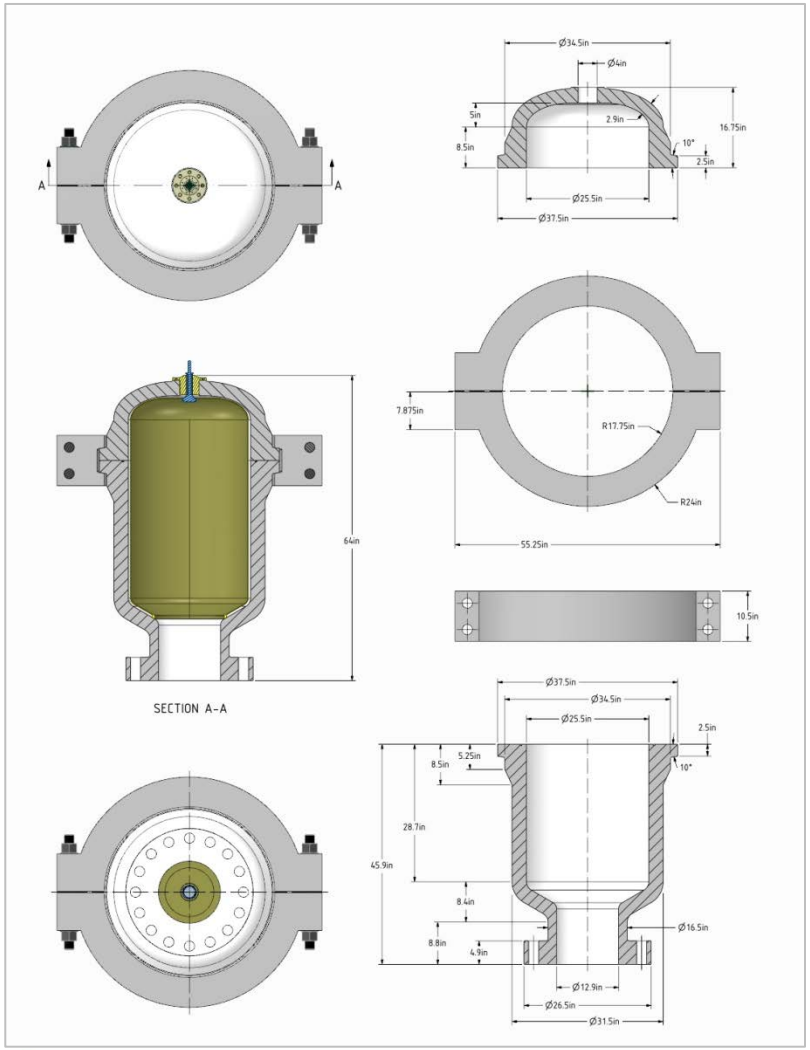

- Completed initial design during Phase I
  - Sized for 1 MWth
  - Flow optimization with reactions using Fluent and Chemkin
  - Structural analysis for 100 atm, 650 C
- Initial test stand design to demonstrate the swirl combustor

Micro-channel compact heat exchanger tolerant of particulate loading

- Compact, low cost heat exchangers are a key technology impacting footprint and cost of the supercritical oxy-combustion cycle
  - Microchannel heat exchangers are currently at a low TRL, but are actively being developed for multiple applications including supercritical CO2 power cycles.
- It is expected that 1-5 micron may pass through the cyclone separator
  - Heat exchanger sparing and cleaning are important considerations.

CWS Alternatives

- Water concentration has a direct influence on combustion efficiencies
  - Loss due to latent heat of vaporization
- Steam is not an asset for this cycle configuration
- Alternative injection technologies include
  - sCO2 as a slurrying agent
  - Posimetric pump

% Water/Coal by weight	% Efficiency (HHV)	% Efficiency (LHV)
0.0	37.50	38.90
25.0	35.18	36.51
50.0	29.70	30.80

sCO2 Slurry Feed Concept

- Variation on the LICADO process and the work of Botero
- Utilize a selective agglomeration process to separate pulverized coal based on carbon content
- High carbon content is entrained in CO2
- Two operational modes
  - Separate below combustor pressure and pressurize slurry
  - Separate at elevated pressure using CO2 boost

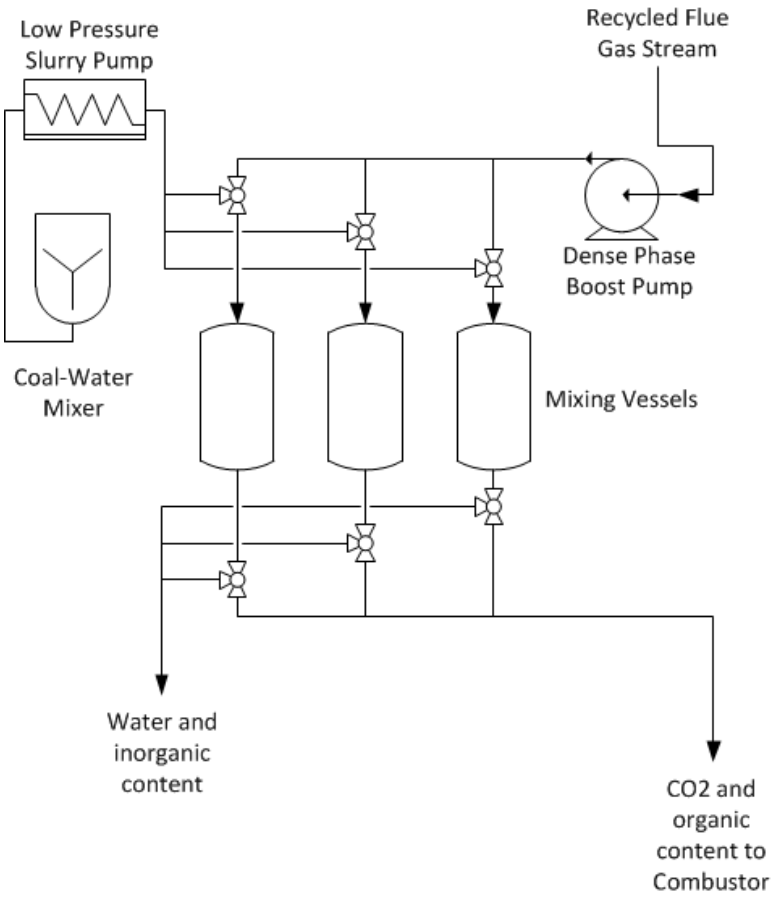

Particulate Removal

- Cyclone separator used to remove fly ash from hot gas stream prior to the micro channel heat exchanger
- Fly ash must be captured from underflow and depressurized for treatment or removal
- Two concepts identified for further investigation
  - Lock chamber installed in between two off-phase control valves (left)
  - Water injection with orifice pressure reduction (right)

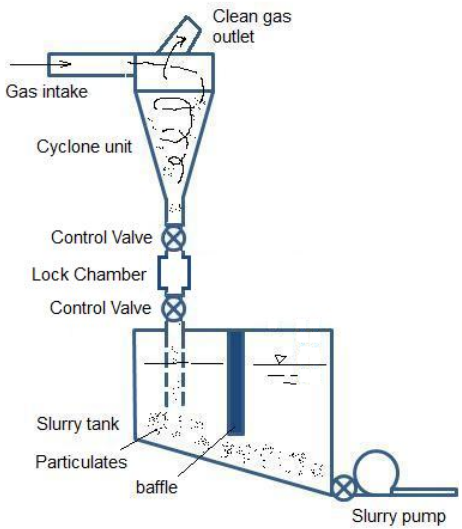

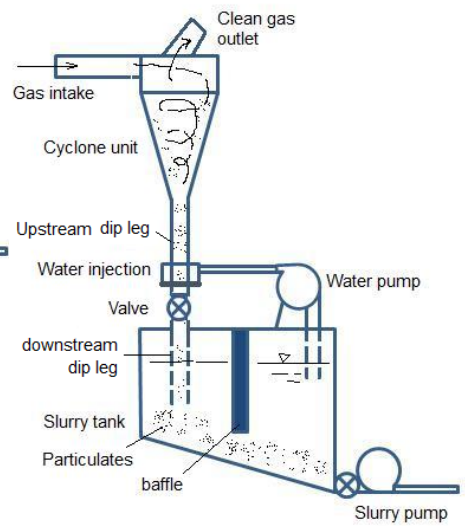

BENCH SCALE TESTING

Bench Scale Testing

- Combustion properties of pulverized coal in CO2
  - Coal slurry preparation
  - Injector visualization
  - Combustion testing using the IQT
- Rotary atomizer visualization
  - Evaluate idealized atomizer for atomizing coal slurry into CO2
  - Density ratio O(1) compared to O(100) to O(1000) for typical rotary atomizer applications
  - Documented in final report

Combustion Properties Testing

- Measure autoignition delay for pulverized coal in supercritical CO2
- Evaluated using SwRI's Ignition Quality Tester (IQT)
  - Standard test apparatus for developed by SwRI
- Preliminary work included slurry preparation, injector modification, injector visualization

Slurry Preparation

- PRB coal provided by CPS Energy of San Antonio
- Refined to 15 µm and 7 µm for compatibility with the IQT injection system
- Slurries of varying ratios prepared using water, iso-octane, and tolunine

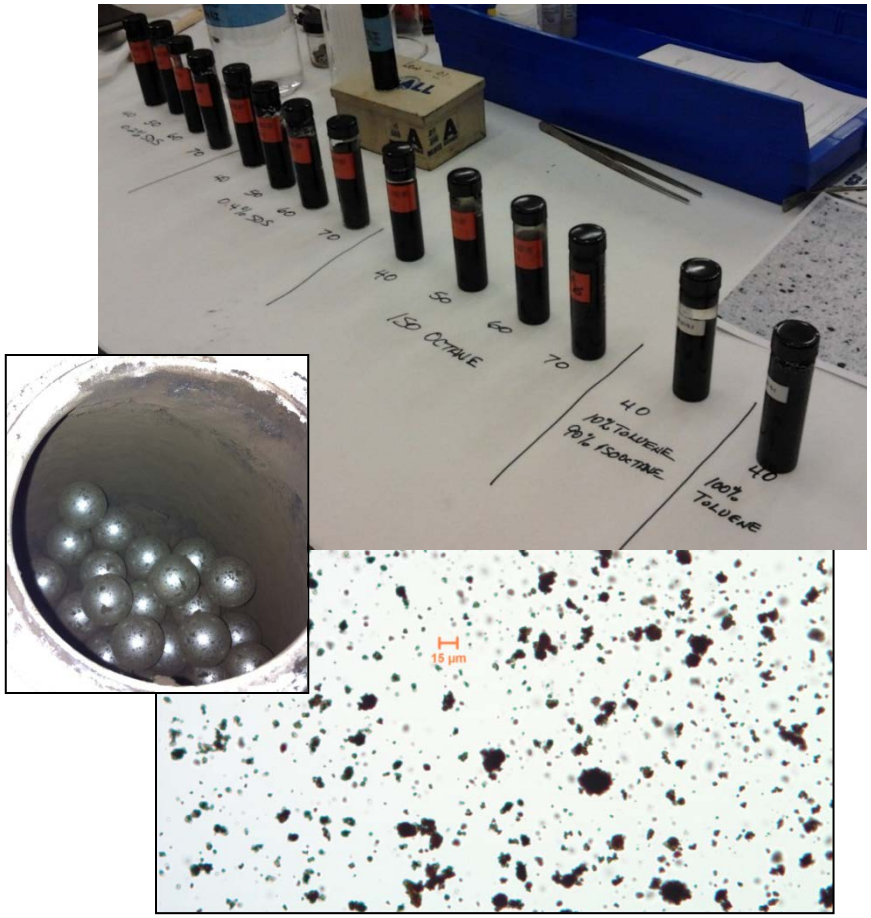

Particulate distribution and agglomeration in a 20% coal and iso-octane slurry

Injector Visualization

- Need to verify spray pattern using modified IQT injector
  - Ensure proper distrubution
  - Minimize contact with IQT wall

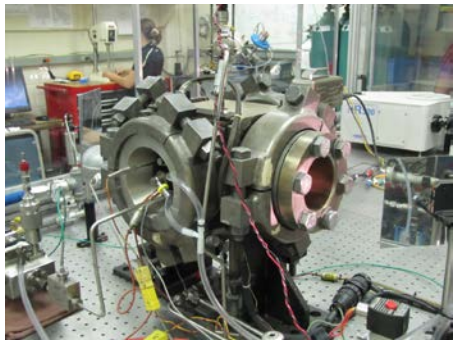

- Utilize Optical Bomb operated by SwRI Div. 3
  - Used for combustion testing and visualization
  - Rated for pressure, not temperature and pressure

Stock Injector

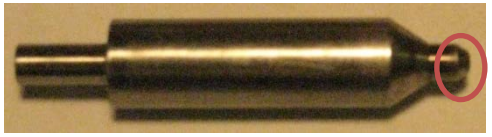

Modified Injector

Injector Visualization

Slurry is carried with greater momentum compared to typical diesel injection

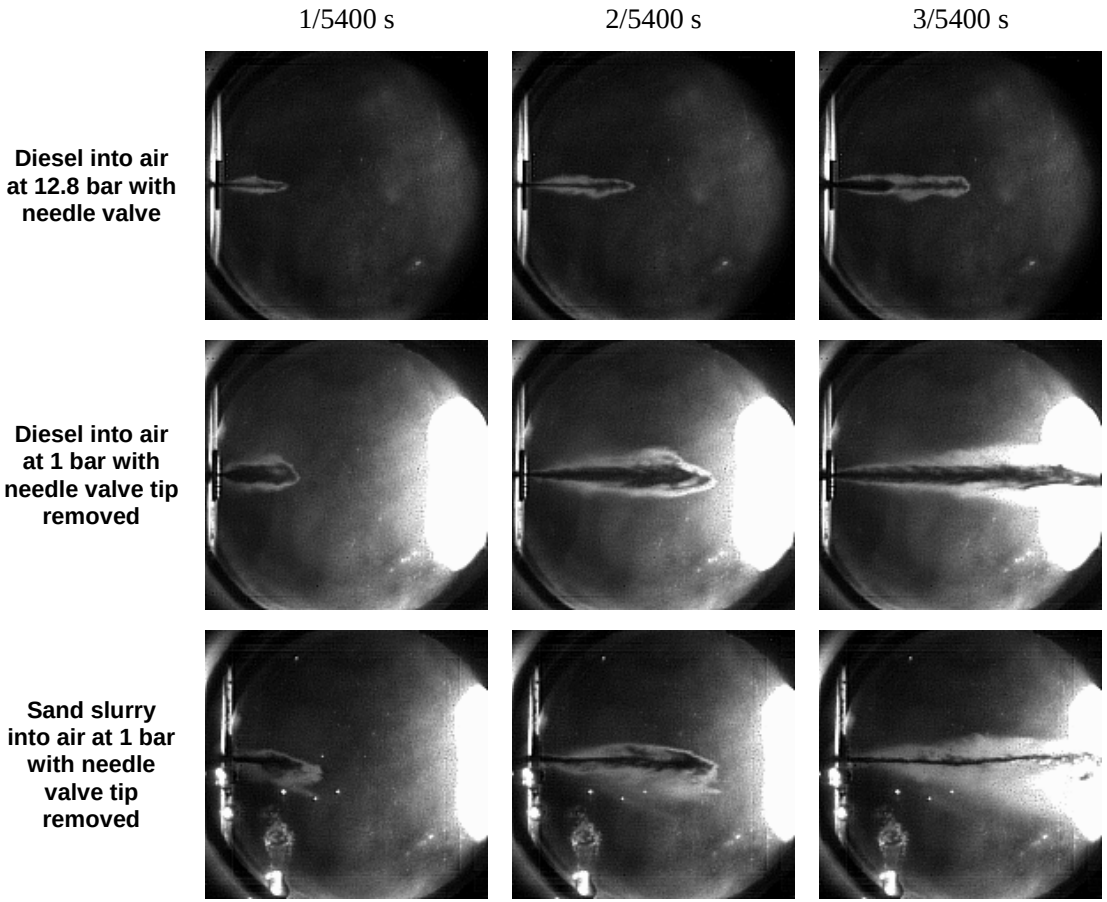

IQT Autoignition Delay Testing

- The Ignition Quality Test Apparatus (IQT™) is a bench top constant-volume combustion chamber
- Used to quantify the reactivity of fuel and lubricants
- Method
  - Heated combustion chamber is filled with compressed gas at elevated pressure
  - Test fluid is injected using a pump-line-nozzle injector
  - Ignition delay is then measured as shown at lower right
- Modifications for Coal Slurry
  - Stock fuel pump replaced with a variable displacement pump
  - Injector tip modified to flow solid fuel slurry
  - Testing run in diagnostics mode to acquire needle lift and combustion trace on an oscilloscope

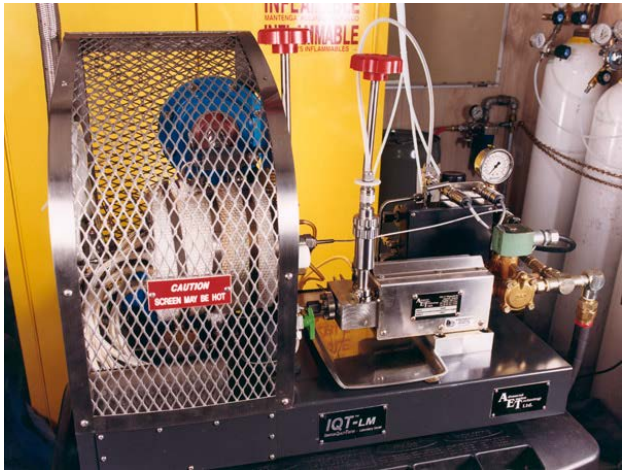

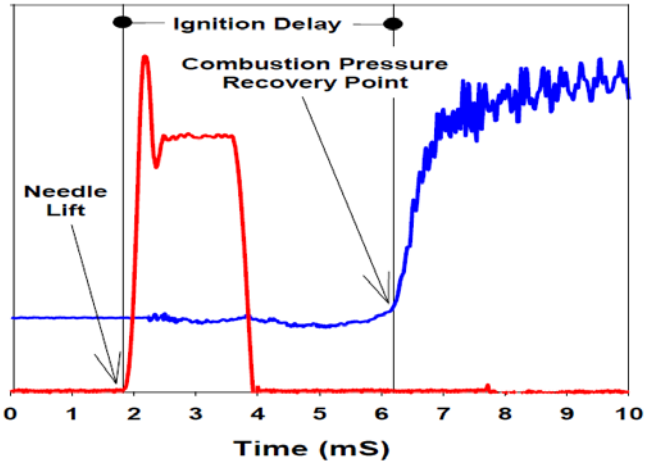

Typical Test Results

- 40% coal – iso-octane slurry with 15 µm coal particles clogged after two injections
- 20% coal – iso-octane slurry with 7.5 µm coal particles provided consistent ignition

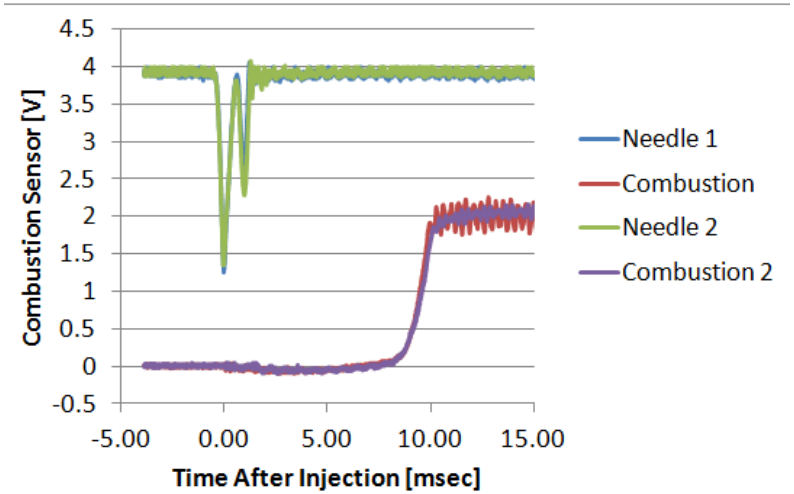

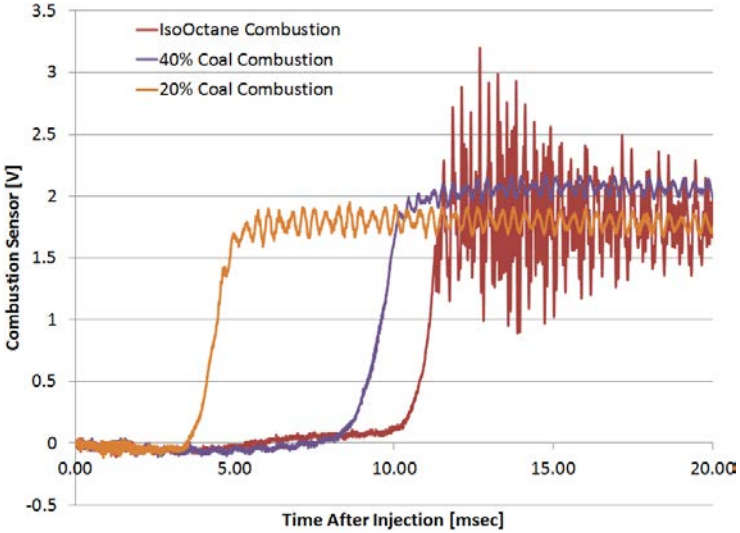

Autoignition Delay Timing

Fuel	Skin Temperature	Charge Air Temperature	Avg. Ignition Delay
	[°C]	[°C]	[msec]
Iso-Octane	568	538	9.7748
	500	475	12.4238
	450	420	27.321
	437.5	411	32.543
	431	406	38.695
	428	400	38.982
	426	399	40.705
	425	398	42.9845
	425.5	398	40.852
	400	376	no-combustion
20% Coal Concentration, 7.5μm Particle Size	423	395	20.052
	423	395	14.968
	420	394	21.167
	415	391	28.653
	400	376	27.879
	400	373	46.721
	400	373	27.209

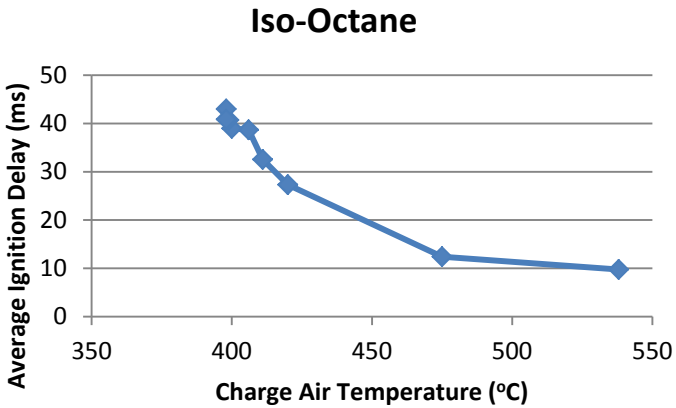

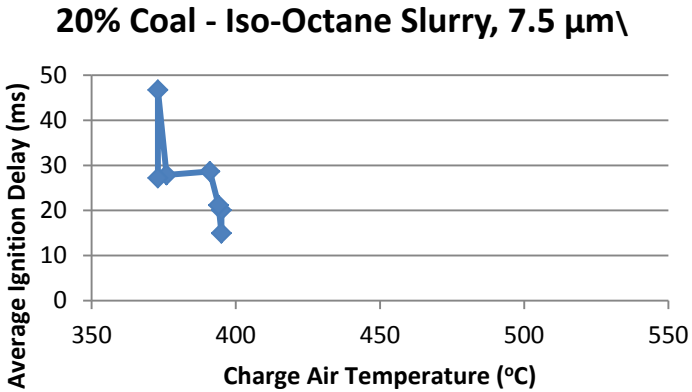

PATH FORWARD

Proposed Phase II:
1 MWth Supercritical Oxy-combustor Demonstration

- Test bed for technology development
  - Supercritical combustor
  - Particulate cleaning of the compact microchannel heat exchanger
  - Solids injection at pressure (sCO2 slurry, posimetric pump)
  - Solids removal at pressure
- Advance technologies from TRL 2, *Technology Concept*, to TRL 6, *Pilot Scale System Demonstrated in a Relevant Environment*
- Operate with coal water slurry, plan for dry feed or sCO2 slurry extension

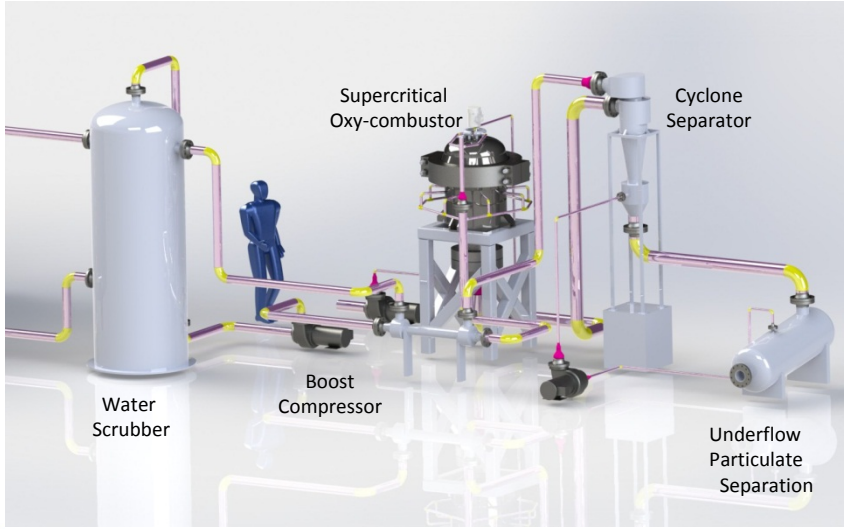

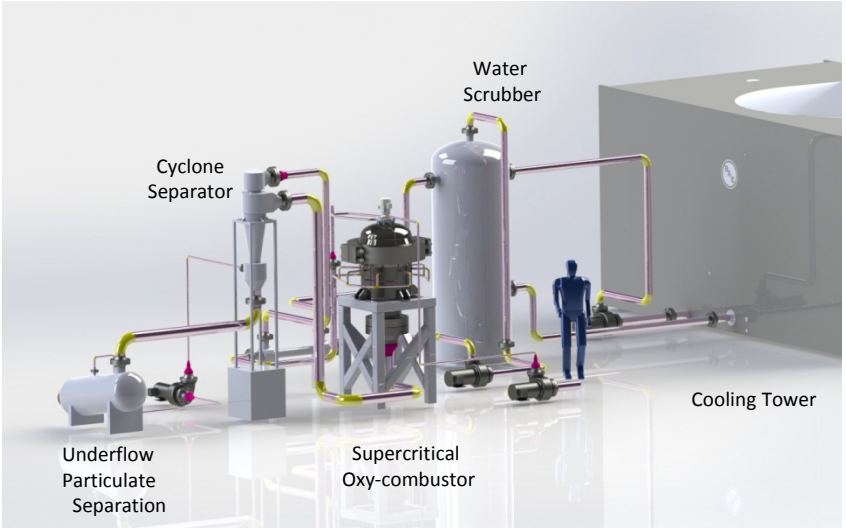

Critical Components Development Path

- Supercritical oxy-combustor for solid fuels
  - Initial design completed for Phase II Demonstration
- Compact, micro-channel heat exchanger
  - Tolerance to particulate loading and cleaning methods should be demonstrated
- Coal-water slurry feed
  - Coal-sCO2 slurry
  - Posimetric pump
- Particulate removal
  - Adaption of conventional technologies

Oxy-Combustion Test Loop

- Test Hardware
  - Charge Compressor or Pressurized CO2 Feed
  - Combustor
    - Oxygen feed
    - Coal slurry feed
  - Cyclone separator
    - Solids removal and handling
  - Recuperater
  - Water scrubber and cleanup
    - Liquid removal and handling
    - CO2 removal and handling
  - Cooling Tower
  - Boost Compressor
- Operating Conditions
  - 450 – 650 C (800 – 1200 F)
  - 102 atm (1500 psi)
- Flow Rates: 1 MWth
  - 3.4 kg/s Hot side flow rate
  - 3.2 kg/s CO2 recycle
  - 0.05 kg/s Coal feed
  - 0.08 kg/s O2 Feed
  - 4.25 kg/s H2O Recycle

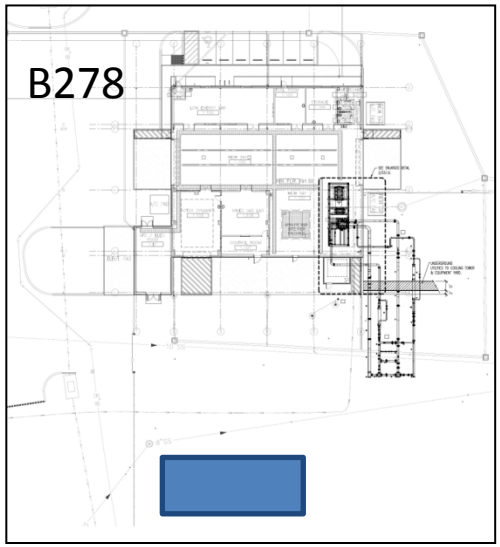

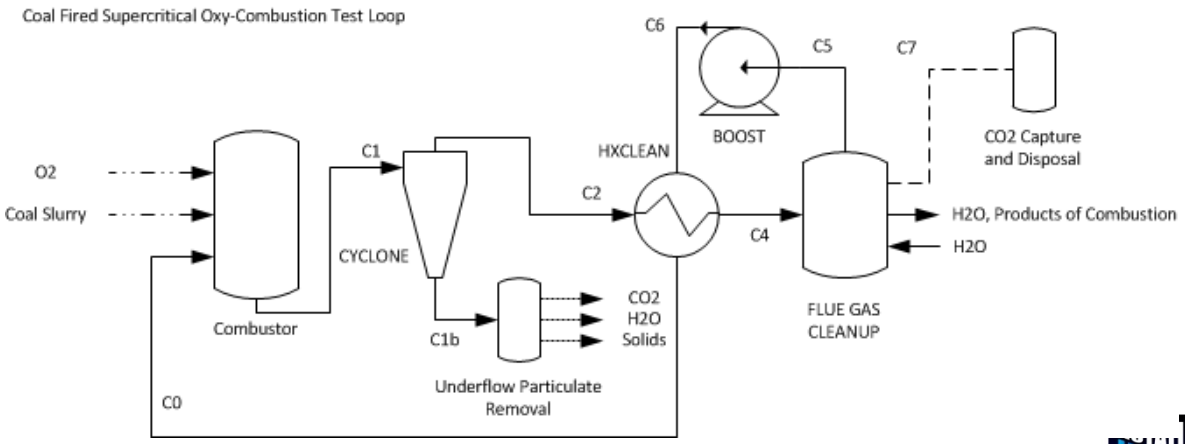

WRAPUP

Development of a Supercritical Oxy-combustion Power Cycle with 99% Carbon Capture

Southwest Research Institute® and Thar Energy L.L.C.

- Engineering development, technology assessment, and economic analysis used to evaluate technical risk and cost of a novel supercritical oxy-combustion power cycle
- Optimized cycle couples a coal-fired supercritical oxy-combustor with a supercritical CO_2 power cycle to achieve *40% efficiency at low firing temperature, 650 C*
  - Cycle is limited by TRL of critical components
- COE $121/MWe with 99% carbon capture
  - 49% increase over Supercritical Steam Without Carbon Capture ($81/MWe), *exceeding the 35% target*
  - 21% reduction in cost as compared to Supercritical Steam with 90% Carbon Capture ($137/MWe).
- Phase 1 completed in September 2013, Extended to March 2014 to cover closeout
- Budget $1.25 million
- Ready to demonstrate supercritical oxy-combustor and critical low TRL technologies

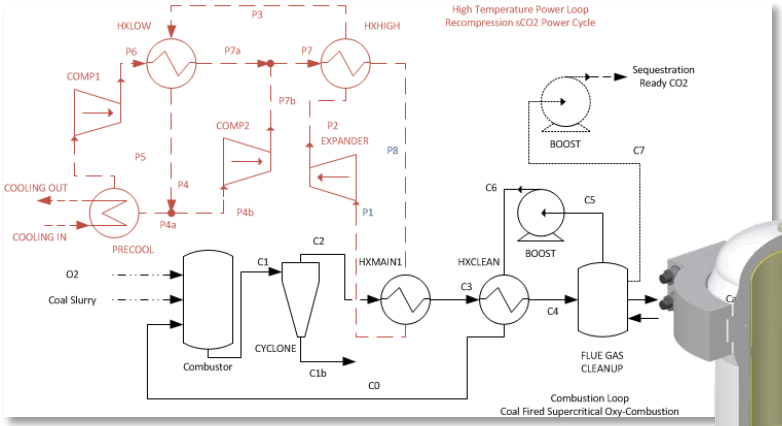

Supported by DOE Project DE-FE0009395