FILE COPY

U.S. DEPARTMENT OF ENERGY
PITTSBURGH ENERGY TECHNOLOGY CENTER

DIRECT COAL LIQUEFACTION
LOW RANK COAL STUDY

CONTRACT NO. DE-AC22 90PC89857

FINAL REPORT
ON
DESIGN, CAPITAL COST AND ECONOMICS
FOR THE LOW RANK COAL STUDY

VOLUME 1A

FEBRUARY 1995
PITTSBURGH, PENNSYLVANIA

Bechtel

3000 Post Oak Boulevard
Houston, Texas 77056-6503
Mailing address: P.O. Box 2166
Houston, Texas 77252-2166

February 13, 1995

U. S. Department of Energy
Pittsburgh Energy Technology Center
Mail Stop 922-H
P. O. Box 10940
Pittsburgh, PA 15236

Attention: Dr. E. B. Klunder
Project Manager

Subject: D.O.E. Coal Liquefaction
Low Rank Coal Study
Contract No. DE-AC22 90PC89857
Bechtel Job No. 20952-003
Final Report on Design, Capital Cost and Economics for Low Rank Coal
Letter No. BLD-036LRC

Dear Dr. Klunder:

Attached are two copies of Volume IA of the subject multi-volume final report. Please note that this report titled "Design, Capital Cost and Economics for Low Rank Coal", is a stand-alone report in two volumes (1-A and 1-B) and contains the results of the study. Also included are two copies of the appendices published in two parts. Part 1 contains appendices A through C and Part II contains appendices D through H.

Copies to other members of DOE, as requested by the contract, are sent directly to each of them. If you have any questions or comments, please contact me.

Sincerely yours,

Syamal K. Poddar
Project Manager

Attachment

cc: Martin Byrnes, DOE/PETC
Edward Schmidt, DOE/PETC
R. Kaplan, AMOCO
File
Gilbert V. McGurl, DOE/PETC
Sai V. Gollakota, Burns & Roe

THE INFORMATION AND DATA CONTAINED IN THIS REPORT ARE THE RESULT OF AN ECONOMIC EVALUATION AND A PRELIMINARY DESIGN EFFORT AND BECAUSE OF THE NATURE OF THIS WORK NO GUARANTEES OR WARRANTIES OF PERFORMANCE, WORKMANSHIP, OR OTHERWISE ARE MADE, EITHER EXPRESSED OR BY IMPLICATION.

TABLE OF CONTENTS

TABLE OF CONTENTS

DESIGN, CAPITAL COST AND ECONOMICS FOR THE LOW RANK COAL STUDY

VOLUME 1A
SECTIONS 1 - 13

1. Introduction and Scope of Study 1-1

2. Overall Design Considerations 2-1

   2.1 Design Basis and Criteria
   2.2 Plant Configuration

3. Overall Material and Utilities Balances 3-1

   3.1 Overall Material Balance
   3.2 Overall Utility Balance

4. Overall Flow Distributions 4-1

   4.1 Overall Hydrogen Flow Distribution
   4.2 Overall Water Flow Distribution

5. Plant 1 (Coal Crushing and Grinding) 5-1

   5.0 Design Basis, Criteria and Considerations
   5.1 Process Description, Block Diagram and Process Flow Diagram
   5.2 Material Balance
   5.3 Major Equipment Summary
   5.4 Utility Summary

6. Plant 1.4 (Coal Slurry Drying) 6-1

   6.0 Design Basis, Criteria and Considerations
   6.1 Plant Description and Process Flow Diagram
   6.2 Material Balance
   6.3 Major Equipment Summary
   6.4 Utility Summary

7. Plant 2 (Coal Liquefaction) 7-1

   7.1 Design Basis, Criteria and Considerations
   7.2 Process Description and Process Flow Diagrams

7.3 Material Balance
7.4 Utility Summary
7.5 Water Summary
7.6 Catalyst and Chemical Summary
7.7 Operating Manpower Requirements
7.8 Major Equipment Summary
7.9 HRI Report

8. Plant 3 (Gas Plant) 8-1

8.1 Design Basis, Criteria and Considerations
8.2 Process Description
8.3 Material Balance
8.4 Utility Summary
8.5 Water Summary
8.6 Catalyst and Chemical Summary
8.7 Operating Manpower Requirements
8.8 Major Equipment Summary

9. Plant 4 (Naphtha Hydrotreater) 9-1

9.1 Design Basis, Criteria and Considerations
9.2 Process Description
9.3 Material Balance
9.4 Utility Summary
9.5 Water Summary
9.6 Catalyst and Chemical Summary
9.7 Operating Manpower Requirements
9.8 Major Equipment Summary

10. Plant 5 (Gas Oil Hydrotreater) 10-1

10.1 Design Basis, Criteria and Considerations
10.2 Process Description
10.3 Material Balance
10.4 Utility Summary
10.5 Water Summary
10.6 Catalyst and Chemical Summary
10.7 Operating Manpower Requirements
10.8 Major Equipment Summary

11. Plant 6 (Hydrogen Purification) 11-1

11.0 Design Basis Criteria and Considerations
11.1 Process Description and Process Flow Diagram
11.2 Material Balance
11.3 Major Equipment Summary
11.4 Utility Summary
11.5 Water Summary

12. Plant 8 (Critical Solvent Deashing Unit) 12-1

12.0 Design Basis Criteria and Considerations
12.1 Process Description and Process Flow Diagram
12.2 Overall Material Balance
12.3 Major Equipment Summary
12.4 Utility Summary
12.5 Water Summary

13. Plant 9 (Hydrogen Production By Coal Gasification) 13-1

13.0 Design Basis Criteria and Considerations

13.0.1 Technology Selection
13.0.2 Design Considerations

13.1 Process Description and Process Flow Diagram
13.2 Material Balance
13.3 Major Equipment List
13.4 Utility Summary
13.5 Water Summary

TABLE OF CONTENTS

DESIGN, CAPITAL COST AND ECONOMICS FOR THE LOW RANK COAL STUDY

VOLUME 1B
SECTIONS 14 - 30

14. Plant 10 (Air Separation) 14-1

14.0 Design Basis Criteria and Considerations
14.1 Process Description and Process Flow Diagram
14.2 Material Balance
14.3 Major Equipment Summary
14.4 Utility Summary
14.5 Water Summary

15. Plant 11 (By-Product Sulfur Recovery) 15-1

15.0 Design Basis Criteria and Considerations
15.1 Process Description and Process Flow Diagram
15.2 Material Balance
15.3 Major Equipment Summary
15.4 Utility Summary
15.5 Water Summary

16. Plant 31 (Steam and Power Generation) 16-1

16.1 Design Basis Criteria and Considerations
16.2 Process Description and Process Flow Diagram
16.3 Overall Steam Balance
16.4 Major Equipment Summary
16.5 Utility Summary

17. Plant 32 (Raw, Cooling and Potable Water Systems) 17-1

17.1 Design Basis Criteria and Considerations
17.2 Process Description and Block Flow Diagram
17.3 Major Equipment Summary
17.4 Utility Summary

Design, Capital Cost and Economics for The Low Rank Coal Study
Table of Contents - continued

18. Plant 38 (Ammonia Recovery) 18-1

18.1 Design Basis Criteria and Considerations
18.2 Process Description and Process Flow Diagram
18.3 Major Equipment Summary
18.4 Utility Summary

19. Plant 39 (Phenol Recovery) 19-1

19.1 Design Basis Criteria and Considerations
19.2 Process Description and Process Flow Diagram
19.3 Overall Material Balance
19.4 Major Equipment Summary
19.5 Utility Summary

20. Plant 21 (Interconnecting Piping Systems) 20-1

20.1 Design Basis Criteria and Considerations
20.2 Plant Description

21. Plant 25 (Chemical and Catalyst Handling) 21-1

21.1 Design Basis Criteria and Considerations
21.2 Plant Description
21.3 Major Equipment List
21.4 Utility Summary
21.5 Chemical and Catalyst Summary

22. Plant 35 (Instrument and Plant Air Facilities) 22-1

22.1 Design Basis Criteria and Considerations
22.2 Plant Description
22.3 Major Equipment List
22.4 Utility Summary

23. Option 6 (Steam Reforming of Natural Gas Plus FBC Unit for Hydrogen Production) 23-1

23.1 Design Basis, Criteria and Considerations

23.2 Process Description and Process Flow Diagram for the Directly Affected Plants
23.3 Material Balance
23.4 Utility Balance for the Directly Affected Plant
23.5 Overall Impact

23.5.1 Overall Plant Configuration and Material Balance
23.5.2 Overall Utility Summary
23.5.3 Overall Water Flow Distribution
23.5.4 Overall Hydrogen Flow Distribution

24. Overall Capital Costs for the Low Rank Coal Study and the Option 6 Case 24-1

24.1 ISBL Plant Field Cost Summaries
24.2 OSBL Plant Field Cost Summaries

25. ASPEN/PLUS Process Simulation Model of the Low Rank Coal Case and Option 6 (Steam Reforming of Natural Gas plus FBC Unit for Hydrogen Production) 25-1

25.1 General Description
25.2 Comparison of Model Predictions with Low Rank Coal Study
25.3 Comparison of Model Predictions with Low Rank Coal Design with Hydrogen Production by Steam Reforming of Natural Gas

26. Overall Raw Material, Catalyst and Chemical Costs 26-1

27. Overall Utility Unit Prices and Consumptions 27-1

28. Overall Product/By-product Values (Low Rank Coal) 28-1

29. Overall Labor Requirements and Rates 29-1

29.1 Staffing Plan
29.1.1 Low Rank Coal Liquefaction with Hydrogen Production by Coal Gasification
29.1.2 Low Rank Coal Liquefaction with Hydrogen Production by Natural Gas Reforming
29.2 Base Wages and Salaries

30. Economics 30-1

30.1 Lotus Spreadsheet Economics Model

30.2 Key Assumptions
30.3 Results
30.4 Sensitivities on Economics

31. Discussion 31-1

32. References 32-1

APPENDICES A THROUGH H

PART I

Appendix A Aspen Plus Process Simulation Model Input File for Low Rank Coal Study - Hydrogen Production by Coal Gasification A-1

Appendix B Aspen Plus Direct Coal Liquefaction Process Simulation Model Fortran User Block Models B-1

Appendix C Aspen Plus Process Simulation Model Input File for Low Rank Coal Study - Hydrogen Production by Steam Reforming of Natural Gas C-1

PART II

Appendix D Management Summary report for Low Rank Coal Study D-1

Appendix E Management Summary Report for Low Rank Coal - Hydrogen Production by Steam Reforming of Natural Gas E-1

Appendix F Miscellaneous File Listings - F-1
The DCLRPT.BAT file
The DCLSTART.REP file

Appendix G Low Rank Coal - Hydrogen Production by Coal Gasification
Aspen Plus - Process Simulation Report G-1

Appendix H Low Rank Coal - Hydrogen Production by Steam Reforming of Natural Gas
Aspen Plus - Process Simulation Report H-1

LIST OF FIGURES

VOLUME 1A
SECTIONS 1 - 13

NUMBER	TITLE	PAGE
2.1	Overall Plant Configuration	2-2
3.1	Overall Material Balance for Low Rank Coal	3-2
4.1	Overall Hydrogen Flow Distribution	4-2
4.2	Overall Water Flow Distribution	4-3
5.1	Plants 1 & 1.4 Low Rank Coal Study	5-2
5.2	Low Rank Coal Study, Coal Crushing, Grinding and Drying	5-4
5.3	ROM Coal Receiving and Storage Section Process Flow Diagram	5-6
7.1	Slurry Preparation/Reaction	7-12
7.2	Primary Separation	7-15
7.3	Fractionation	7-16
7.4	Low Rank Coal Study Material Balance (Per Train)	7-19
8.1	Process Flow Diagram for Gas Plant (Plant 3)	8-4
8.2	Process Flow Diagram for Merox Unit (Plant 3)	8-5
9.1	Process Flow Diagram for Naphtha Hydrotreater (Plant 4)	9-3
10.1	Process Flow Diagram for Gas Oil Hydrotreater (Plant 5)	10-5
11.1	Process Flow Diagram for High Pressure H_2 Recovery (Plant 6.1)	11-4
11.2	Process Flow Diagram for Low Pressure H_2 Recovery (Plant 6.2)	11-5
11.3	Process Flow Diagram Amine Regeneration (Plant 6.2)	11-6
11.4	Process Flow Diagram COSORB Unit (Plant 6.2)	11-8
12.1	Process Flow Diagram of ROSE® Process	12-3
13.1	Block Flow Diagram - Hydrogen Production by Coal Gasification	13-6
13.2	Slurry Preparation and Gasification	13-9
13.3	Shift Reactor and Gas Cooling	13-10
13.4	Hydrogen Purification and Compression	13-11
13.5	Overall Material Balance	13-15

LIST OF FIGURES
VOLUME 1B
SECTIONS 14 - 30

14.1 Process Flow Diagram - Air Separation (Plant 10) 14-2

15.1 Process Flow Diagram - Sulfur Plant (Plant 11.1) 15-3
15.2 Process Flow Diagram - SCOT Unit (Plant 11.2) 15-6
15.3 Process Flow Diagram Incinerator (Plant 11.3) 15-8

16.1 Steam and Power Generation (Plant 31) 16-3
16.2 Overall Steam Flow Distribution (Plant 31) 16-6

17.1 Overall Raw, Clarified and Potable Water Distribution (Plant 32) 17-2
17.2 Process Flow Diagram, Raw Water Treatment (Plant 32) 17-3
17.3 Cooling Water Balance (Plant 32) 17-6

18.1 Process Flow Diagram (Plant 38) 18-4

19.1 Process Flow Sketch Dephenolization 19-3

23.1 Process Flow Diagram of Steam Reformer for Natural Gas 23-3
23.2 Process Flow Diagram for Fluidized Bed Combustor 23-4
23.3 Process Flow Diagram of Steam Turbine Generator 23-6
23.4 Hydrogen Production by Steam Reforming of Natural Gas
- Plant 2 Overall Material Balance 23-10
23.5 Hydrogen Production by Steam Reforming of Natural Gas
- Overall Material Balance 23-23
23.6 Hydrogen Production by Steam Reforming of Natural Gas
- Overall Water Flow Distribution 23-26
23.7 Hydrogen Production by Steam Reforming of Natural Gas
- Overall Hydrogen Flow Distribution 23-29

25.1 ASPEN PLUS Block Flow Diagram of the Process
Simulation Model 25-2

29.1 Overall Plant Organization 29-2
29.2 Laboratory Organization and Personnel 29-3
29.3 Operations Organization and Personnel 29-4
29.4 Engineering Organization and Personnel 29-5
29.5 Environmental Safety and Security Organization and Personnel 29-6
29.6 Administrative Organization and Personnel 29-7
29.7 Maintenance Organization and Personnel 29-8
29.8 Operations Organization and Personnel for Option 6 . . . . . 29.9

LIST OF TABLES

VOLUME 1A
SECTIONS 1 - 13

NUMBER	TITLE	PAGE
2.1	ISBL Plants	2-3
2.2	OSBL Plants	2-4
3.0	Overall Material Balance - Low Rank Coal	3-3
3.1	Overall Utility Balance for Low Rank Coal Study	3-4
5.1	Coal Analysis of Low Rank Coal (Black Thunder Mine)	5-3
5.2	Size Analysis for Low Rank ROM Coal	5-5
5.3	Product Requirements for the Coal Crushing and Grinding Plant	5-5
5.4	Material Balance for Plant 1	5-7
5.5	Major Equipment List for Plant 1	5-8
5.6	Utility Requirements for Plant 1	5-9
6.1	Material Balance for Plant 1.4	6-1
6.2	Major Equipment List for Plant 1.4	6-2
6.3	Utility Requirement for Plant 1.4	6-2
7.1	Analysis of Feed Coal to Liquefaction	7-2
7.2	First Stage Yields and Product Qualities	7-3
7.3	Material Balance (per train), Plant 2	7-12
7.4	Plant 2 Utility Summary (per train)	7-14
7.5	Water Summary (per train), Plant 2	7-15
7.6	Major Equipment Summary, Plant 2	7-17
8.1	Material Balance, Plant 3	8-7
8.2	Utility Summary, Plant 3	8-8
8.3	Major Equipment Summary, Plant 3	8-9
9.1	Naphtha Hydrotreater Product Characteristics	9-1
9.2	Material Balance, Plant 4	9-5
9.3	Utility Summary, Plant 4	9-6
9.4	Water Summary, Plant 4	9-6
9.5	Major Equipment Summary, Plant 4	9-8
10.1	Feeds to the Gas Oil Hydrotreater	10-1
10.2	Products from the Gas Oil Hydrotreater	10-2

10.3 Material Balance, Plant 5 10-7
10.4 Utility Summary, Plant 5 10-8
10.5 Water Summary, Plant 5 10-9
10.6 Major Equipment Summary, Plant 5 10-11

11.1 Material Balance for Plant 6 11-10
11.2 Major Equipment Summary, Plant 6 11-12
11.3 Utility Summary, Plant 6 11-15
11.4 Water Summary, Plant 6 11-16

12.1 Material Balance for Plant 8 12-4
12.2 Major Equipment Summary, Plant 8 12-5
12.3 Utility Summary, Plant 8 12-6

13.1 Gasification Feed Streams 13-2
13.2 Gas Product Data, Gasification Plant 13-3
13.3 Material Balance for Plant 9 13-14
13.4 Major Equipment Summary, Plant 9 13-17
13.5 Utility Summary, Plant 9 13-21
13.6 Water Summary, Plant 9 13-22

LIST OF TABLES

VOLUME 1B
SECTIONS 14 - 30

14.1 Material Balance, Plant 10 14-3
14.2 Major Equipment Summary, Plant 10 14-4

15.1 Material Balance, Plant 11 15-10
15.2 Major Equipment Summary, Plant 11 15-12
15.3 Utility Summary, Plant 11 15-16

16.1 Overall Steam Balance 16-10
16.2 Major Equipment Summary, Plant 11 16-13
16.3 Plant 31 Utility Summary 16-17

17.1 Typical Raw Water Analysis 17-4
17.2 Overall CW and Make-up Water Balance 17-7
17.3 Major Equipment Summary, Plant 32 17-11
17.4 Overall Raw Water Requirement 17-14

18.1 Material Balance for Plant 38 18-2
18.2 Major Equipment Summary, Plant 38 18-7

19.1 Material Balance for Plant 39 19-4
19.2 Major Equipment Summary, Plant 39 19-5

20.1 Fuel Gas Availability 20-3
21.1 Chemical and Catalysts 21-2

23.1 Plant 1, Material Balance, Option 6 23-8
23.2 Plant 2, Material Balance, Option 6 23-9
23.3 Plant 3, Material Balance, Option 6 23-11
23.4 Plant 4, Material Balance, Option 6 23-12
23.5 Plant 5, Material Balance, Option 6 23-13
23.6 Plant 6, Material Balance, Option 6 23-14
23.7 Plant 8, Material Balance, Option 6 23-15
23.8 Plant 9, Material Balance, Option 6 23-16
23.9 Plant 11, Material Balance, Option 6 23-17
23.10 Plant 31, Material Balance, Option 6 23-18
23.11 Plant 38, Material Balance, Option 6 23-19
23.12 Plant 39, Material Balance, Option 6 23-20
23.13 Low Rank Coal Plus Option 6 Utility Requirement for Plant 9-01 23-21

23.14 Overall Material Balance Low Rank Coal, Option 6 23-24
23.15 Overall Utility Balance Low Rank Coal, Option 6 23-25
23.16 Overall CW & Make-up Water Balance Low Rank Coal, Option 6 23-27
23.17 Overall Raw Water Requirement Low Rank Coal, Option 6 23-28
23.18 Overall Steam Balance Low Rank Coal, Option 6 23-30
23.19 Overall Condensate Balance Low Rank Coal, Option 6 23-31

24.1 Low Rank Coal, Hydrogen By Coal Gasification Estimated Total Field Costs for Coal Liquefaction Complex Process Units (ISBL) 24-2
24.2 Low Rank Coal, Hydrogen by Steam Reforming Estimated Total Field Costs for Coal Liquefaction Process Units (ISBL) 24-3
24.3 Low Rank Coal Study Hydrogen by Coal Gasification Estimated Total Field Costs - Offsites/Utilities (OSBL) 24-5
24.4 Low Rank Coal Study, Hydrogen by Steam Reforming Estimated Total Field Costs - Offsites/Utilities (OSBL) 24-6
24.5 Nth Plant Capital Cost for Complex Low Rank Coal, Hydrogen by Coal Gasification 24-7
24.6 Nth Plant Capital Cost for Complex Low Rank Coal, Hydrogen by Steam Reforming 24-8

25.1 Comparison of the ASPEN PLUS Process Simulation Model with the Process Design for the Low Rank Coal Study - Hydrogen Production by Coal Gasification 25-5
25.2 Comparison of the ASPEN PLUS Process Simulation Model with the Process Design for the Low Rank Coal Case Option 6 Hydrogen Production by Steam Reforming of Natural Gas 25-6

26.1 Catalyst Chemicals Cost 26-1

27.1 Raw Material and Utility Pricing 27-1
27.2 Overall Utility Consumption 27-1

28.1 By-Product Values 28-1

29.1 Base Wages and Salaries 29-10

30.1 Economic Analysis of Low Rank Coal Case with Hydrogen Produced by Coal Gasification 30-2
30.2 Economic Analysis of Low Rank Coal Case with Hydrogen Produced by Steam Reforming 30-5
30.3 Economic Results and Sensitivities 30-8
30.4 Rate of Inflation Sensitivities on Economic Results 30-11

1. INTRODUCTION AND SCOPE OF STUDY

1.1 INTRODUCTION

Over the last two decades under the sponsorship of the Federal Government, several detailed designs and cost estimates of commercial size direct coal liquefaction complexes were carried out. One of these, known as the Breckinridge Project, was the 1981 Bechtel study on the design and estimation of capital cost of an H-Coal plant. This conceptual design was based on the single-stage H-Coal process developed by Hydrocarbon Research Inc. In 1986, Bechtel, with Amoco's sponsorship, studied the impact of technology improvements associated with the two-stage coal liquefaction technology practiced at the Advanced Coal Liquefaction Research facility in Wilsonville, Alabama.

In 1990, Bechtel/Amoco were awarded a contract by the U.S. Department of Energy (DOE), under contract number DEAC22 90PC89857, to update the design and economics of a conceptual commercial size direct coal liquefaction plant for Illinois No. 6 bituminous coal. Results of this study were presented in Contractors' Review Meeting of September, 1992.

The basis for the study was the then available pilot plant data generated at the advanced coal liquefaction facility (pilot plant) at Wilsonville, Alabama in run 257E. This design basis was felt to be rather conservative. While the baseline study was at the final stage of completion, a separate set of data became available based on Wilsonville run Nos. 257J, 261B and 261D. These data were for a higher space velocity through the liquefaction reactor.

Because of the potential favorable economic impact of the higher space velocity, DOE modified the subject contract and authorized the Bechtel/Amoco team to extend the study to include the higher space velocity data as an additional design basis and designate this case as the improved baseline case. In addition, this contract modification included the incorporation of the best baseline case option as an additional case. This option is the case where the required hydrogen is produced by natural gas reforming and the ash concentrate is fed to a fluidized bed combustion (FBC) plant to generate energy. Thereby, waste production is minimized and electrical energy is produced. The results of this improved baseline study were presented at last year's Contractors' Review Meeting.

DOE further extended this contract to include the pilot plant data at Wilsonville on Black Thunder Mine sub-bituminous coal (runs 262E and 263J) and called this study the Low Rank Coal Study. This paper summarizes the results of the Low Rank Coal Study.

This study effort included design of all the ISBL plants to incorporate the requirements for this coal. The design of OSBL plants were carried out by prorating the respective OSBL plants of the baseline. The onstream factor for the entire complex was kept constant at 88.4% as was used in the baseline design study. The capital cost estimates were carried out following the procedure of the baseline case. Therefore, the capital cost data are of budgetary type with an associated accuracy of ±30%.

ASPEN PLUS modeling of the various ISBL plants was conducted following the approach used for the baseline case.

The design, capital cost estimates and process model were then extended to the low rank coal case coupled with the best option identified in the baseline study. In the baseline study, the best option (based on minimal capital cost) was established by studying seven different options. The best option was that where hydrogen was produced by natural gas reforming plus a Fluid Bed Combustion (FBC) unit to generate energy using the waste (ash concentrate) from the ROSE-SR unit as feed.

The economic evaluation was carried out utilizing the LOTUS 1-2-3 spreadsheet economics model developed for the baseline study with appropriate changes as required.

1.2 SCOPE

The conceptual design as shown in the Block Flow Diagram, Figure 2.1 is for a coal liquefaction plant with a capacity of roughly 60,000 barrels per day of liquid product plus propane and butanes utilizing relatively inexpensive low rank (subbituminous) coal from the Black Thunder mine in Powder River Basin. The liquid product produced is primarily for transportation fuels.

The primary scope of this low rank coal study is similar to that of the original baseline case. The results of the original baseline study (Illinois No. 6 Coal) provided the basis for this study.

Thus, the objectives of this study are to:

- develop overall material balance, overall utility requirements and overall flow distributions (hydrogen and water) for the entire coal liquefaction complex
- generate capital cost estimates for the entire complex following the same approach as used in the baseline design
- carry out economic evaluations utilizing the Lotus 1-2-3 Spreadsheet Economic Model developed in the baseline design
- develop an ASPEN PLUS process simulation model with required modifications and additions to the baseline model to account for the low rank coal parameters.

2. OVERALL DESIGN CONSIDERATIONS

2.1. DESIGN BASIS AND CRITERIA

In general, the design bases, criteria and considerations for the low rank coal cases are similar to the baseline case (Illinois No. 6). Also, the plant numbering methodology and the number of plants are the same as for the baseline design case.

2.2 PLANT CONFIGURATION

The overall plant configuration for the low rank coal is the same as the baseline case (Illinois No. 6). The configuration of the entire liquefaction complex is shown in Figure 2.1. The overall configuration shows the interconnection of the primary process plants. Besides these plants, there are a number of additional Outside Battery Limit (OSBL) plants which are not shown in this figure. The complete list of these ISBL and OSBL plants is given in Tables 2.1 and 2.2.

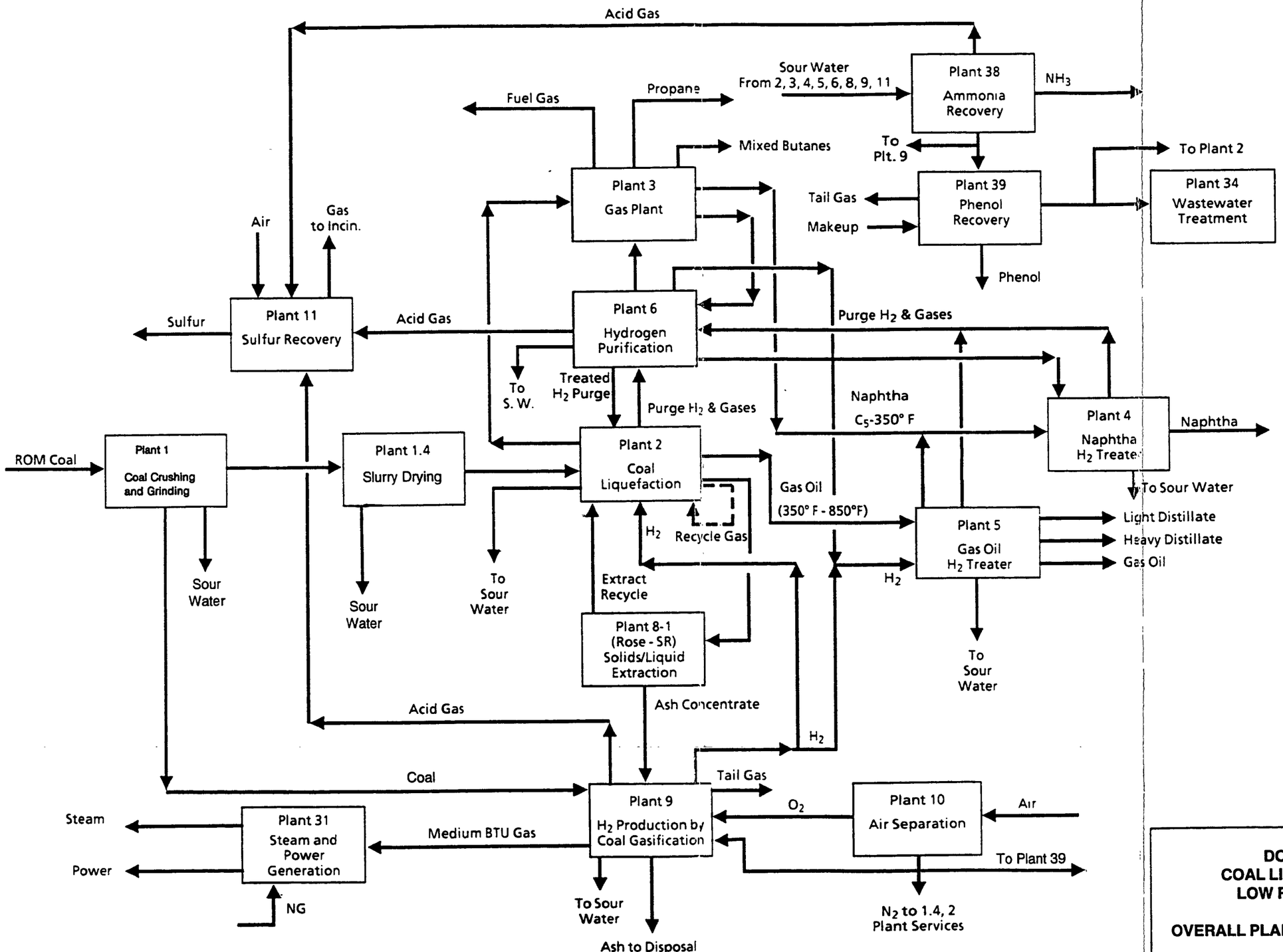

DOE/PETC
COAL LIQUEFACTION
LOW RANK COAL

OVERALL PLANT CONFIGURATION

Figure 2.1

0891016-6

Table 2.1

ISBL PLANTS

ISBL Plant No.	ISBL PLANTS
1	Coal Crushing and Grinding
1.4	Slurry Drying
2	Two Stage Coal Liquefaction
3	Gas Plant
4	Naphtha Hydrotreater
5	Gas Oil Hydrotreater
6	Hydrogen Purification
7	OPEN
8	Critical Solvent Deashing Unit
9	Hydrogen Production By Coal Gasification
9-01	Hydrogen Production Option (Hydrogen Production By Natural Gas Reforming)
10	Air Separation
11	By-Product Sulfur Recovery Unit

Table 2.2

OSBL PLANTS

OSBL Plant No.	OSBL Plants
19	Relief and Blowdown
20	Tankage
21	Interconnecting Piping Systems
22	Product Shipping
23	Tank Car/Tank Truck Loading
24	Coal Refuse and Ash Disposal
25	Catalyst and Chemical Handling
26 - 29	OPEN
30	Electrical Distribution System
31	Steam and Power Generation (Co-generation)
31-01	Fluidized Bed Combustor/Steam Turbine Generator
32	Raw, Cooling and Potable Water Systems
33	Fire Protection Systems
34	Waste Water Treatment Systems
35	Instrument & Plant Air Systems
36	Purge and Flush Oil System
37	Solid Waste Management
38	Ammonia Recovery
39	Phenol Recovery
40	General Site Systems
41	Buildings
42	Telecommunications Systems

3. OVERALL MATERIAL AND UTILITY BALANCES

3.1 Overall Material Balance

The overall material balance for the low rank coal liquefaction complex is shown in Figure 3.1. The flow rates are in Mlb/hr and on dry basis unless otherwise noted. Exceptions are plants 34, 38 and 39 where the material balances for these plants are shown on a wet basis. To keep the figure simple, minor streams such as steam, sour water and make-up amine are not shown.

3.2 Overall Utility Balance

The overall utility balance for the low rank coal liquefaction complex is shown in Table 3.1. Because the utility consumptions for plants 23, 24 and 25 are small and intermittent, they are not included in this table.

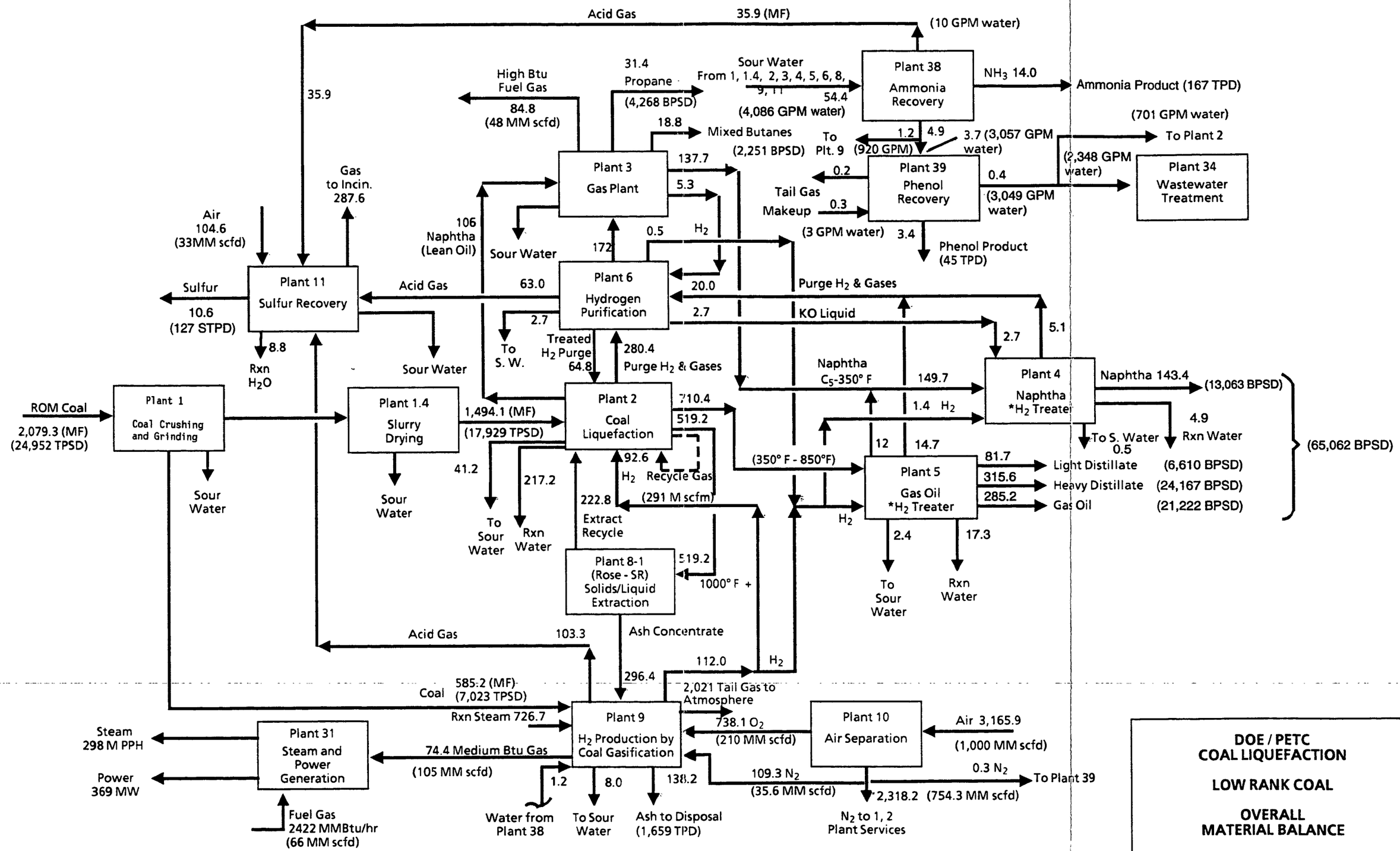

Notes:

1. Flow rates are in MLB/HR unless noted and on dry basis
2. Minor streams including steam, water, sour water, and make-up amine are not shown on this diagram
3. Flow rates around plants #38, 39, 34 are shown on wet basis

*H_2 Treater = Hydrotreater

1193033-1

DOE / PETC
COAL LIQUEFACTION

LOW RANK COAL

OVERALL MATERIAL BALANCE

Figure 3.1

Tabl 3.0

Overall Material Balance – Low Rank Coal

Basis : Dry

Input	MLb/H	TPSD	BPSD	MMSCFD		
Coal–(MAF)	1,948	23,380	------	------	93.70%	Coal
Coal–Ash	131	1,572	------	------	6.30%	Ash
Air–1 (Sulfur Plant)	105	------	------	33	28.8	MW
Air–2 (Oxygen Plant)	3,166	------	------	1,000	28.8	MW
Reaction Steam (H2 Plant)	727	------	------	------		
Total	6,077					
Output	MLb/H	TPSD	BPSD	MMSCFD		
Propane	31	------	4,268	------	0.504	SG60
Butane	19	------	2,251	------	0.572	SG60
Naphtha	143	------	13,063	------	57.3	API
Light Distillate	82	------	6,610	------	35.1	API
Heavy Distillate	316	------	24,167	------	26.6	API
Gas Oil	285	------	21,222	------	22.4	API
Sulfur	10	127	------	------		
Ammonia	14	167	------	------		
Phenol	3	45	------	------		
Reaction Water (PL–2,4,5,11)	250	------	------	------		
Ash/Slag	138	1,658	------	------		
High BTU Fuel Gas (PL–3)	85	------	------	48	16.0	MW
Medium BTU Fuel Gas (PL–9)	74	------	------	105	6.5	MW
Gas to Incinerator (PL–11)	288	------	------	70	37.6	MW
Nitrogen (PL–10)	2,318	------	------	754	28.0	MW
Tail Gas to Atm–1 (PL–9)	2,021	------	------	437	42.1	MW
Tail Gas to Atm–2 (PL–39)	0.3	------	------	0.1	23.9	MW
Total	6,077		71,581			

Table 3.1
OVERALL UTILITY BALANCE FOR LOW RANK COAL

Jan. '95 File : OVUB.wk1

Plant No.	Plant Name	Fuel Gas MMBtu/H	Elect Power kW	Steam 600# 720F MLb/H	Steam 600# 489F MLb/H	Steam 150# 366F MLb/H	Steam 50# 298F MLb/H	BFW/ Cond MLb/H	Cooling Water GPM	Sour Water GPM	Waste Water GPM	Makeup Water GPM	Air MSCFM	N2 MSCFM
1	Coal Grinding & Drying	384	25,211						6,429					
1.4	Slurry Drying	805	463						714					
2	Coal Liquefaction	1,667	41,080	6	(97)	(46)	(58)	473	8,829	(1,845)				1
3	Gas Plant	(1,567)	1,080		215		17	(232)	7,857	(2)				
4	Naphtha Hydrotreater	17	757		38			(38)	2,214	(21)		(17)		
5	Gas Oil Hydrotreater	292	2,712			(114)	45	74	114	(134)		(84)		
6	Hydrogen Purification		38,100				202	(202)	350	(103)		(82)		
8	Critical Solvent De-Ashing	121	2,496			15		0		(30)				
9	H2 by Coal Gasification	(1,093)	69,980		(292)	(756)	(766)	1,813	55,250	(931)	110	(1,025)		27
10	Air Separation		158,110											(549)
11	Byproduct Sulfur Recovery	67	1,547		35	(20)	12	(27)	6,307	(31)				
--	All Common Users			73		40	90	(193)				(550)	9	
	Sub-Total (Process)	**693**	**341,536**	**79**	**(101)**	**(881)**	**(458)**	**1,669**	**88,064**	**(3,097)**	**110**	**(1,758)**	**9**	**(521)**
19	Relief/Blowdown		20											
20	Tankage		6,800			22	4	(26)	100					
30	Electr Distribution													
31	Steam/Power Generation	3,875	(381,487)	(298)		315	366	(383)	62,000		(400)	(922)		
32	Raw and Cooling Water		15,000						(224,014)		(500)	8,778		
32	Poatable Water											(100)		
33	Fire Protection		44											
34	Sewage/Effluent Treatment		7,500				3	(3)				3,602		
35	Instr/Plant Air Systems		2,900										(15)	
36	Purge/Flush Oil Systems		265											
37	Solid Waste Disposal		50								100			
38	Ammonia Recovery		1,349		321	512		(833)	67,679	3,097				
39	Phenol recovery		1,123			31	85	(116)	6,171		(1,600)			
--	Bldg 41,42,Lights,etc.		4,900											
	Steam Import				(220)									
	Steam Export			220										
	Natural Gas Import	(4,568)												
	Offsite BL/Evaporation							153			2,290	(9,600)		
	Sub-Total (Offsite)	**(693)**	**(341,536)**	**(79)**	**101**	**881**	**458**	**(1,208)**	**(88,064)**	**3,097**	**(110)**	**1,758**	**(15)**	**0**
	Grand Total	**0**	**0**	**(0)**	**(0)**	**0**	**0**	**461**	**0**	**0**	**0**	**0**	**(7)**	**(521)**

4. OVERALL FLOW DISTRIBUTIONS

4. Overall Flow Distributions

In this section the overall hydrogen flow distribution and overall water flow distribution are separately presented for the low rank coal study. Subsection 4.1 addresses the overall hydrogen flow distribution and 4.2 summarizes the overall water flow distribution.

4.1 Overall Hydrogen Flow Distribution

The overall hydrogen flow distribution for the entire complex is shown in Figure 4.1. This figure schematically shows the input and output flow rates in MMSCFD for several key process plants. As shown in this figure, hydrogen being produced in Plant 9 (Hydrogen Production Plant) gets distributed to Plant 2 (Coal Liquefaction Plant, the heart of the liquefaction complex) and two hydrotreaters, viz, Plant 4 (Naphtha hydrotreater) and Plant 5 (Gas Oil Hydrotreater). The output streams from these plants, goes through the hydrogen purification plant (Plant 6) and through the gas plant (Plant 3).

4.2 Overall Water Flow Distribution

The overall water flow distribution for the entire liquefaction complex is shown in Figure 4.2. This figure schematically describes the sequence and quantity of water flow through the various plants of the entire liquefaction complex. The flow rates through these plants are expressed in gallons per minute.

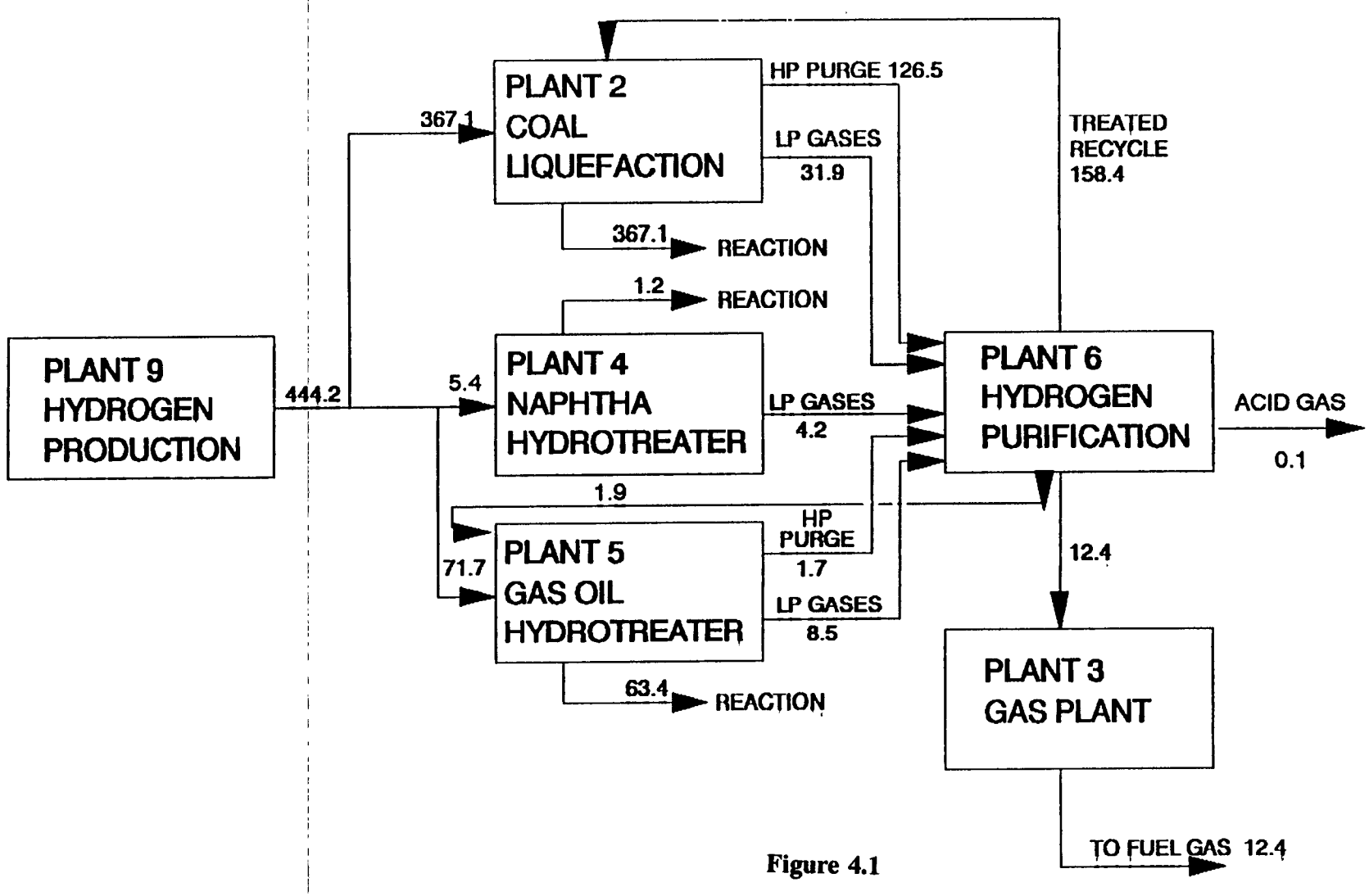

Figure 4.1

NOTES:
Hydrogen flow rates ar in MMSCFD (Pur H2)

OVERALL HYDROGEN FLOW DISTRIBUTION

LOW RANK COAL

H2OVFLO.DRW 10/93

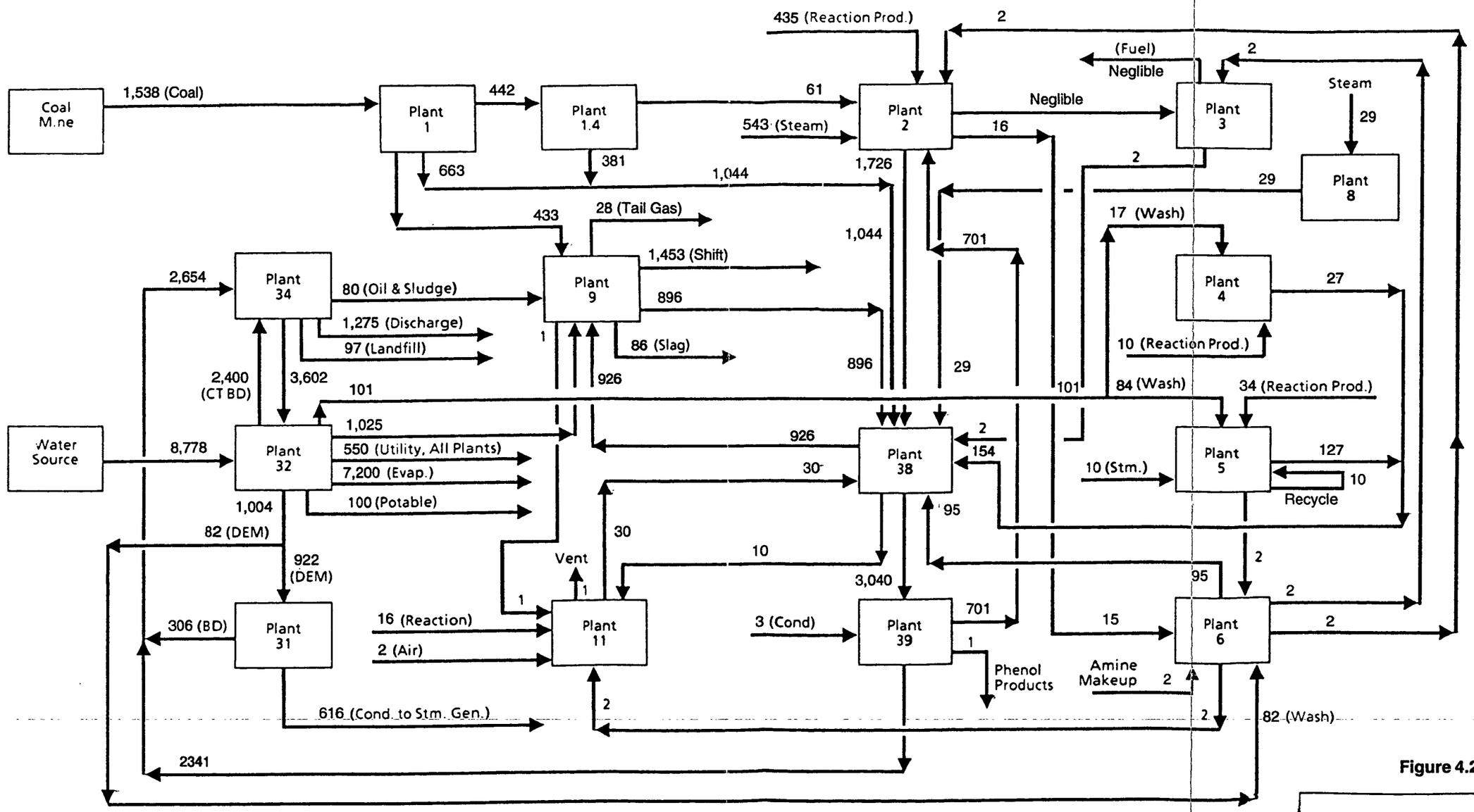

Notes:

1. Flows are for normal operation and in GPM

Figure 4.2

DOE/PETC
COAL LIQUEFACTION
LOW RANK COAL

OVERALL WATER FLOW DISTRIBUTION

1092048-2

5. PLANT 1

5. Plant 1 (Coal Crushing and Grinding)

5.0 Design Basis, Criteria and Considerations

ROM coal enters the fence line of the complex. The analysis of ROM coal is shown in Table 5.1. ROM coal is crushed and ground by means of a coal milling operation. During the crushing and grinding, the moisture is reduced from 27 wt % to 13 wt %.

Storage capacity for ROM Coal and clean coal are as follows:

> For ROM coal, "Active Storage" Pile is of 4 days capacity and remaining 24 days of "Inactive Storage".
>
> For clean coal, 2 days of "Active Storage" pile.

Operation Basis for the crushing and grinding operation is:

> 2 shifts a day 5 days a week and 50 weeks per year
> Third shift for maintenance
> 14.5 hrs operation with 1.5 hrs for start-up, planned and unplanned outages.

Size analysis for ROM Coal is shown in Table 5.2.

The production rate of this plant is based on the requirement of the coal liquefaction plant (Plant 2), and the coal gasification plant (Plant 9), the source for hydrogen supply.

Coal from this coal crushing and grinding plant (Plant 1) is further processed through a coal grinding and drying plant (Plant 1.4), where the coal moisture is reduced to 2 wt%.

Plant 1 design is on the basis of ten trains, each train processing nominal 2,495 TPSD on MF basis. The product size and moisture content of coal from Plant 1 is shown in Table 5.3. With the ash content of this low rank coal (6.3 wt.% on dry basis) being low enough, no cleaning of coal is included in the design basis.

5.1 Process Description, Block Diagram and Process Flow Diagram

ROM coal first enters the screens section. Here, the small particles, 1/8" and smaller are separated. This portion corresponds to 30 % of the total ROM coal which is fed directly to coal gasification. The remaining 70% will be further size reduced by crushing and grinding and dried with hot air in vertical ball mills. In plant 1 the moisture content will be reduced from 27% to approximately 13%.

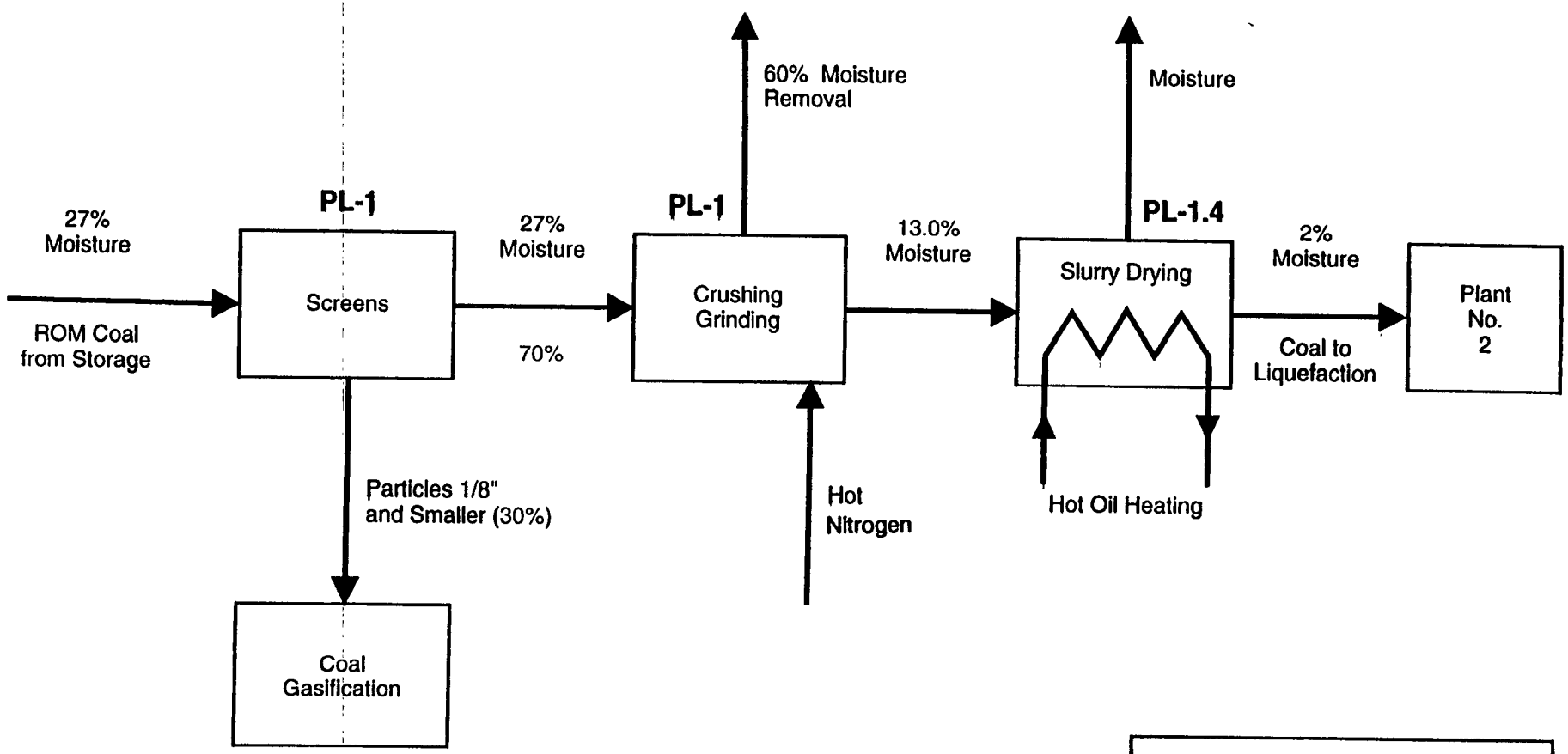

Figure 5.1

PLANTS 1 AND 1.4
LOW RANK COAL STUDY

O:\1094090\LRCS.CDR

The next step is to reduce moisture content to 2% with slurry driers in plant 1.4 Figure 5.1 presents a simplified block flow diagram showing the combined operations for plants 1 and 1.4.
A more detailed description of the plant is shown in Figure 5.2.
The coal receiving, storage and mixing section of the plant incorporates a storage and homogenization facility. Additional items are shown in a separate box. For this plant a circular storage system with a bridge type scraper reclaimer will be used.

Figure 5.3 represents the process flow diagram for this section of the plant.

ROM coal will be delivered from the mine to the preparation plant by a belt conveyor. The coal will be transferred to a storage feed conveyor which will deliver the coal to the circular or longitudinal pile(s).

The circular storage system will use a stacker with slewing and luffing capabilities mounted on a column at the center of the storage pile. The column supports the stacker which slowly rotates and deposits the coal in the storage area in thin layers. A bridge scraper reclaimer will reclaim the coal to the center of the storage pile area where it will be transferred through a central hopper to an underground reclaim conveyor. Additional reclaim hoppers and feeders will be provided below the pile.

The longitudinal systems will use a traveling stacker mounted on rails. The stacker, with luffing and slewing capability, can build coal piles on either side of the track. The coal will be laid in thin layers as the stacker moves slowly up and down the rail track. Reclaiming will be done by a bridge mounted bucket wheel reclaimer. As the reclaimer advances into the pile it will take a cut across the entire cross section of the pile thus ensuring a well blended feed to the cleaning plant.

Coal from the reclaim conveyor will be conveyed to a surge bin which will ensure a steady feed for the downstream units. A tramp iron magnet will be provided to collect tramp magnetic metal found in the plant feed.

A weigh feeder located below the surge bin will deliver measured quantities of raw coal to the plant feed conveyor for transport to the crushing and grinding.

Table 5.1

Coal Analysis
Low Rank Coal (Black Thunder Mine)

Proximate Analysis (wt%)	
Volatile Matter	21.6
Fixed Carbon	35.8
Ash	4.6
Moisture	27.0

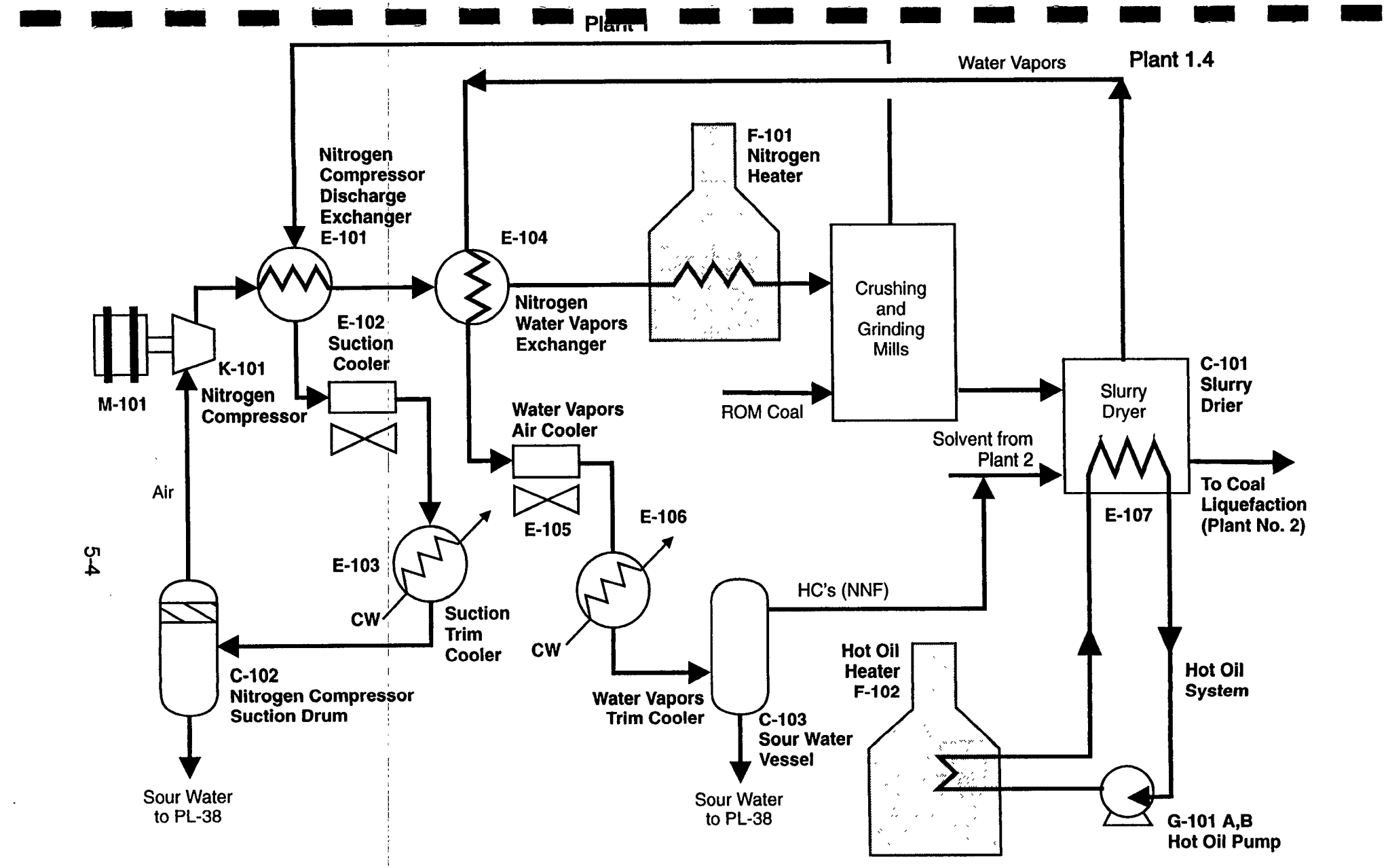

Figure 5.2

DOE/PETC COAL LIQUEFACTION
LOW RANK COAL
COAL CRUSHING, GRINDING, DRYING

O:\1094090\CCGD.CDR

Table 5.2

Size Analysis for Low Rank ROM Coal (Subbituminous-Wyodak Coal)

Size (inch or mesh)	Percent
1-1/2" x 3/8"	51
3/8 x 28M	37
28M x 0	12
Total	100

Table 5.3

Product Requirements Coal Crushing & Grinding Plant

Product Size:

30% of capacity, 1/8" and smaller to gasification

70% of capacity, 50% < 200 mesh to liquefaction

Moisture: Approximately 13%

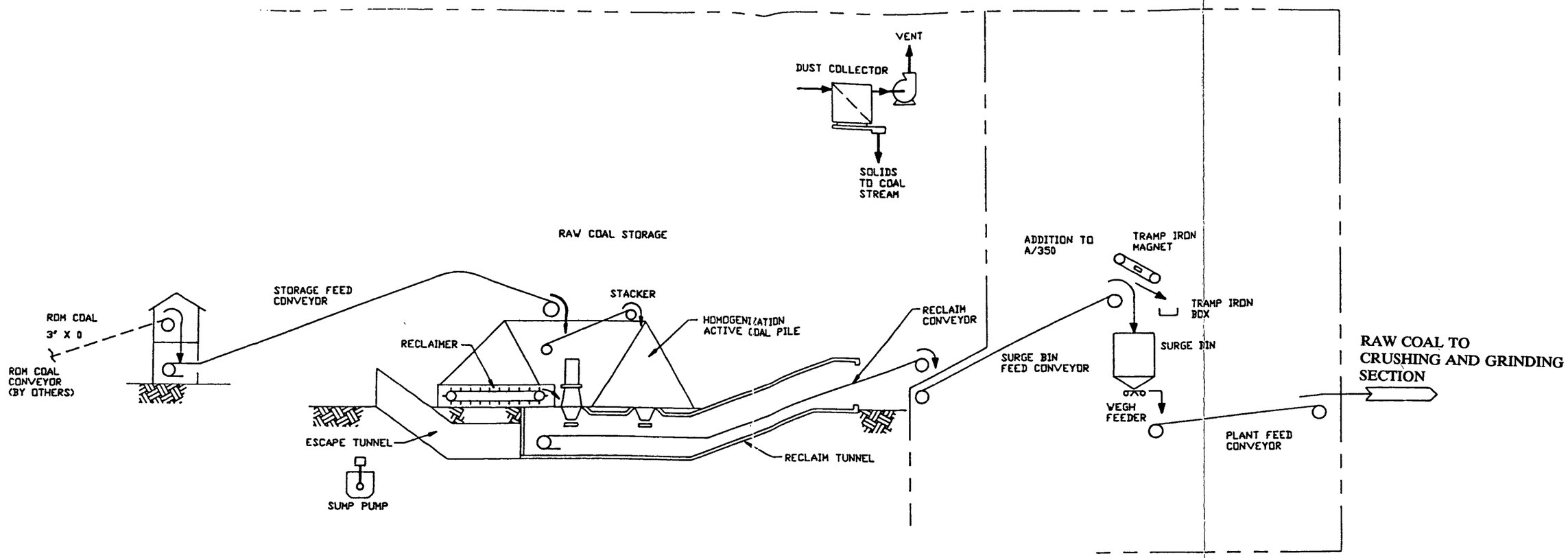

Figur 5.3

BECHTEL CORPORATION SAN FRANCISCO			
DOE COAL LIQUEFACTION STUDY			
RDM COAL RECEIVING AND STORAGE SECTION PROCESS FLOW DIAGRAM			
	JOB NO.	DRAWING NO.	REV.
	20952		0

5.2 Material Balance

The overall material balance for Plant 1 is shown in Table 5.4. This material balance is for the entire plant. There is a total of ten trains in Plant 1.

Table 5.4

PLANT 1 : INPUT

Components (Lb/Hr)	ROM Coal PL-1 Feed			Total Input	ROM Coal (wt%-Wet)	ROM Coal (wt%-MF)
H2O	769,052			769,052	27.00%	
Coal	1,948,292			1,948,292	68.40%	93.70%
Ash	130,996			130,996	4.60%	6.30%
Total, PPH	2,848,340			2,848,340	100%	100%
Total, TPD	34,180			34,180		
Total, TPD (MF)	24,951			24,951		

PLANT 1 : OUTPUT

Components (Lb/Hr)	ROM Coal to PL-9	Coal to PL-1.4	Moisture Loss	Total Output	PL-1.4 Feed (wt%-Wet)	PL-1.4 Feed (wt%-MF)
H2O	216,447	221,042	331,563	769,052	12.89%	
Coal	548,340	1,399,952		1,948,292	81.62%	93.70%
Ash	36,868	94,128		130,996	5.49%	6.30%
Total, PPH	801,655	1,715,122	331,563	2,848,340	100%	100%
Total, TPD	9,620	20,581	3,979	34,180		
Total, TPD (MF)	7,022	17,929	——	24,951		

5.3 Major Equipm nt Summary

The major equipment list for the plant is included in Table 5.5.

Table 5.5

Major Equipment List
Plant 1
(per train)

Equipment	Description
Nitrogen compressor (K-101)	2,100 HP, 5 MM SCFH
Nitrogen compressor suction drum (C-102	13' - 0" x 30' - 0" C.S. 50 psig/300°F
Suction trim cooler (E-103)	2,110 ft.^{2}, 9.0 MM BTU/Hr.
Suction cooler (E-102)	4,090 ft.^{2}, 146 HP, 40 MM BTU/Hr.
Nitrogen Compressor disch. exch. (E-101)	300 ft.^{2}, 3 MM BTU/Hr.
Nitrogen water vapors exchanger (E-104)	3,530 ft.^{2}, 20 MM BTU/Hr.
Water vapors air cooler (E-105)	90 ft.^{2}, 2 HP
Water vapors trim cooler (E-106)	314 ft.^{2}, 1 MM BTU/Hr.
Sour water vessel (C-103)	13' - 0" x 30' - 0" C.S. 50 psig/300°F
Nitrogen heater (F-101)	40 MM BTU/Hr. (fired heater)
Hot oil heater (F-102)	805 MM BTU/HR
Crushing & Grinding mills	50 MM BTU/Hr., 3500 HP

5.4 Utility Summary

Utility requirement for Plant 1 are listed in Table 5.6.

Table 5.6

Utility Summary, Plant 1

Fuel Gas, MM BTU/Hr.	384
Electric Power, kw	25,211
Cooling water, GPM	6,429

6. PLANT 1.4

6. Plant 1.4 - (Slurry Drying)

6.0 Design Basis Criteria and Considerations

This plant dries the coal from the coal crushing and grinding (Plant 1) before it enters the coal liquefaction plant (Plant 2).

The partially dried coal which comes out of Plant 1 is separated into two streams. The fraction with particle size smaller than 1/8" goes to plants while the fraction with 50% <200 mesh goes to plant 1.4. The plant is designed to dry 17,929 TPD (Dry). The plant operates 24 hours a day.

6.1 Plant Description and Process Flow Diagram

Plant 1.4 is designed to dry the feed coal to the liquefaction reactor to 2% moisture content. Plants 1 and 1.4 are to be considered as a combined plant for coal crushing, grinding and drying. Crushing and grinding and partial drying of coal to 13% moisture level are accomplished in a portion of this combined plant designated as Plant 1 as described earlier. The final drying is accomplished in Plant 1.4. These two plants are designated as plants 1 and 1.4 to keep the numbering system consistent with the baseline design and they are designed in a way to operate in an integrated mode.

In Plant 1.4, the crushed, ground, and partially dried coal (with approximately 13% moisture) mixes with the recycle oil (solvent) from the recycle slurry hold drum and the slurry oil from the atmospheric bottom, as described in section 7.2.

The coal solvent mixture is heated indirectly by hot oil. The hot oil circuit includes a hot oil heater and a hot oil pump. Drying of coal in the presence of solvent helps prevent the collapse of the coal pore structure.

Four identical slurry drying circuits are required, 1 train for each coal liquefaction (Plant 2) train.

Figure 5.2 in the previous section of this report shows the details for one of the trains. Figure 5.2 shows the combined operation of the crushing and drying (Plant 1) plus the slurry drying (Plant 1.4).

6.2 Material Balance

The overall material balance for Plant 1.4 is shown in Table 6.1. This material balance is for the entire plant. There are four trains in Plant 1.4. A portion of the recycle solvent, as mentioned in section 6.1 above, passes through the plant with the coal exiting out of this plant to plant 2. The solvent entering plant 1.4 is not included in the overall material balance of this plant, because this stream is a "pass through" in this plant.

Table 6.1
Material Balance for Plant 1.4

INPUT					
Components (Lb/Hr)	Feed from PL-1		Total Input	From PL-1 (wt.% - West)	From PL-1 (wt.% - MF)
H_2O	221,042		221,042	12.89%	
Coal	1,399,952		1,399,952	81.62%	93.70%
Ash	94,128		94,128	5.49%	6.30%
Total, PPH	1,715,122		1,715,122	100%	100%
Total, TPD	20,581		20,581		
Total, TPD (MF)	17,929		17,929		
OUTPUT					
Components (Lb/Hr)	Dry Coal to PL-2	Moisture Loss	Total Output	PL-2 Feed (wt.% - West)	PL-2 Feed (wt.% - MF)
H_2O	30,492	190,550	221,042	2.00%	
Coal	1,399,952		1,399,952	91.83%	93.70%
Ash	94,128		94,128	6.17%	6.30%
Total, PPH	1,524,572	190,550	1,715,122	100%	100%
Total, TPD	18,295	2,287	20,581		
Total, TPD (MF)	17,929		17,929		

6.3 Major Equipment Summary

The major equipment list for the plant is included in Table 6.2.

Table 6.2

Major Equipment List
Plant 1.4
(per train - 4 trains)

Equipment	Description
Slurry Dryer (C-101)	1,915 ft.^{2}, 81 MM BTU/Hr.
Hot Oil Heater (F-102)	81 MM BTU/Hr (Fired Heater)
Hot Oil Pump (G-101 A&B)	1,280 GPM, 600 HP

6.4 Utility Summary

The utility summary for this plant is included in Table 6.3.

Table 6.3

Utility Summary for Plant 1.4

Fuel Gas, MM BTU/Hr.	805
Electrical Power, kW	463
Cooling Water, GPM	714

7. PLANT 2

7. Plant 2 (Coal Liquefaction)

7.1 Design Basis Criteria and Considerations

Coal Feed

The coal to be fed to the coal liquefaction plant originates from the Black Thunder Mine located in Gillette, Wyoming in the Powder Basin. After exiting Plant 1.4, the slurry drying plant, the coal enters Plant 2 (coal liquefaction). Analysis of the coal is presented in Table 7.1.

Coal feed to Plant 2 is approximately:

Basis	Per Train	Total
MF Basis	4,482 TPSD	17,928 TPSD
MAF Basis	4,200 TPSD	16,800 TPSD

Moisture in the coal feed is 2.0 wt. % and ash (MF) content is 6.3 wt. %.

Process

The process used will be an hybrid reactor system with a slurry reactor for the first stage and an ebullated bed supported catalyst reactor for the second stage (H-COAL by HRI).

Maximum Reactor Size

The maximum size reactor will process a feed rate of 4,200 TPSD (MAF basis), producing 15,000 BPSD of liquid products (C_5-850°F). Four trains of the maximum size operating at capacity will be required to reach the proposed production of approximately 60,000 BPSD.

Table 7.1

Analysis of Feed Coal to Liquefaction
Low Rank Coal (Black Thunder Mine)

Proximate Analysis (wt. %, Dry Basis)	
Volatile Matter	44.7
Fixed Carbon	49.0
Ash	6.3
Ultimate Analysis (wt. %, Dry Basis)	
Carbon	68.5
Hydrogen	4.8
Sulfur	0.5
Nitrogen	1.0
Ash	6.3
Oxygen (by difference)	18.9
Sulfur Forms (wt. %, Dry Basis)	
Pyrite	0.10
Sulfitic	0.01
Organic (by difference)	0.39
Mineral Analysis of Ash (wt. % ignited)	
Phosphorus pentoxide, P_2O_5	1.00
Silica, SiO_2	35.75
Ferric Oxide, Fe_2O_3	5.25
Alumina, Al_2O_3	18.13
Titania, TiO_2	1.25
Lime, CaO	20.42
Magnesia, MgO	4.22
Sulfur Trioxide, SO_3	11.65
Potassium Oxide, K_2O	0.49
Sodium Oxide, Na_2O	0.47
Undetermined	1.37

Table 7.2 shows the yields and product qualities.

Table 7.2

First Stage Yields and Product Qualities

Yield, Wt% MAF Coal	First Stage	Overall
CO	1.43	1.90
CO2	3.31	4.42
NH3	0.55	0.74
H2O	11.85	15.80
H2S	0.16	0.21
C1	1.21	2.68
C2	0.85	1.88
C3	0.89	1.99
C4	0.58	1.12
C5-350°F	2.45	9.90
350-450°F	2.88	7.39
450-650°F	8.20	22.17
650-850°F	7.35	19.85
850-1000°F	*22.60	0.73
1000°F	*27.59	7.71
Unconverted Coal	11.00	7.30
Ash	6.72	6.72
H2 (Consumed)	-2.90	-5.80

*estimated

Product Quality (API Gravity):

	First Stage (estimated)	Overall
IBP-350°F	46.5	47.5
350-450°F	27.4	27.9
450-650°F	17.2	17.7
650-850°F	10.9	11.9
850-1000°F	0.9	1.0
1000°F	-10.5	-9.5

Design Considerations

The design of the slurry preparation system of the Coal Liquefaction Plant was based on the concept used in the Breckinridge Project.

The capacity of an individual train was determined by HRI and it was based on reactor diameter and weight considerations. The coal throughput using the maximum-sized reactors was based on the space velocity used in Wilsonville run 262E and 263J. The liquefaction of each section including primary separation was designed by HRI. The HRI design report is included in Section 7.10.

The process, except the reaction system and slurry and hydrogen preheat system, was modeled using Simulation Science's PROCESS simulation software. The model was used to develop equipment sizing, product separations, and utility requirements for those portions of the plant not provided by HRI. Sizing information supplied by HRI was used directly in the study. This included the slurry and hydrogen preheat system, the reactor system, the high pressure separations system, and the recycle hydrogen compressor.

The material balance was developed from the information provided by HRI and extended to the rest of the plant. The overall material balance for the plant is shown in subsection 7.3, Table 7.3.

The process was developed making maximum use of air-fin coolers and condensers to a process outlet temperature of 130°F. The cooling of hot process fluids by steam generation was utilized wherever possible. Most of the steam generated was at the 150 psig level.

The separation system was developed with a two pressure level configuration. Each pressure had three separators: hot at the reactor effluent temperature (760°F), warm at approximately 550 °F, and cold at 130°F. The three separators configuration improved the purity of the recycle hydrogen stream, reduced the amount of heavy material in the gas stream sent to Plant 3, and reduced the amount of gases sent to atmospheric fractionation.

The coil outlet temperatures of the atmospheric and vacuum heaters was maximized to tube coking limitations. The pressures in the two fractionation towers was set at the lowest level practical by overhead condensing and vacuum system limitations in order to achieve as high a bottoms cut point as possible.

Two separate flush oil systems have been incorporated in the design. The light flush oil is taken from the atmospheric tower sidestream and is used for flushing instruments in slurry service. The heavy flush oil is taken from the vacuum tower upper sidestream and is used for flushing the seals of pumps in slurry service.

7.2 Process Description and Process Flow Diagrams

The plant consists of three sections. These are: Slurry Preparation and Liquefaction Reaction, Primary Separation and Product Fractionation. These three sections are schematically shown in process flow diagrams, Figures 7.1 through 7.3, respectively.

As with C-106, emergency interstage quench with a solids free liquid is required. The Molyvan soluble catalyst is withdrawn from C-105 into a dump tank, (not shown in Figure 7.1).

Effluent from the First-Stage Reactor enters exchanger E-124 where it is cooled by fresh hydrogen. The stream then enters drum (C-126) where a separation is made between vapor and liquid. Vapor joins second stage reactor effluent vapor. Liquid is quenched with the remaining hydrogen (fresh and recycle), and introduced into the bottom of the second-stage ebullated bed reactor (C-106). The interstage quench hydrogen flow rate is controlled to maintain the second stage reactor in heat balance. In the event of loss of the recycle gas quench or excessive reaction in the reactor, provisions need to be made to provide a solid free liquid stream for use as an emergency interstage quench.

Primary Separation

As shown on Figure 7.2, the effluent from the top of the Second Stage Reactor is sent directly to the Hot High Pressure Separator (C107) at 810°F and 3000 psig. The overhead vapor, after being separated from the slurry, is cooled to 550°F in exchange with recycle and makeup hydrogen in exchanger E107 and enters the Warm High Pressure Separator (C110). The temperature of the separator is set high enough to prevent precipitation of ammonium salts. The overhead of the warm separator is cooled to 130°F in exchange with recycle and makeup hydrogen in exchanger E106 and in air-fin exchanger E109 before entering the Cold High Pressure Separator (C113). Wash water is injected ahead of the air-fin cooler for control of ammonium salt deposition as the vapor is cooled. The vapor from that separator is compressed in the Recycle Hydrogen Compressor (K101) and returned to the reactors as recycle hydrogen. A portion of the stream is purged from the system to the Hydrogen Purification Unit (Plant 6) to prevent the build-up of methane and other non-condensables in the system. The water phase is withdrawn to the Sour Water Flash Drum (C116) and eventually to Plant 38 for recovery of anhydrous ammonia.

The liquid from the Hot High Pressure Separator is flashed to 100 psig in the Hot Low Pressure Separator (C108). The vapor from the Hot Low Pressure Separator is cooled from 750°F to 450°F in exchange with the Warm Low Pressure Separator liquid (E104) and in an exchanger producing 150 psig steam (E105). The mixed vapor-liquid stream then enters the Warm Low Pressure Separator (C111) along with the liquid from the Warm High Pressure Separator. The temperature of the separator is set high enough to prevent precipitation of ammonium salts. The vapor from the Warm Low Pressure Separator is cooled to 130°F in an air-fin cooler (E110) and enters the Cold Low Pressure Separator (C114) along with the liquid from the Cold High Pressure Separator. Wash water is injected ahead of the air-fin cooler for control of ammonium salt deposition. The vapor from this separator is sent to the Hydrogen Purification Plant, the liquid is sent to the Product Distillation Feed Flash Drum (C126), and the water phase is sent to the Sour Water Flash Drum (C116). The liquid from the Warm Low Pressure Separator is heated

by the feed to that vessel in exchanger E104 and sent to the Product Distillation Feed Flash Drum. The liquid from the Hot Low Pressure Separator is further flashed to 20 psig in the Recycle Slurry Hold Drum (C109). The vapor is cooled in air-fin exchanger E108 and sent to the Recycle Slurry Hold Drum Overhead Accumulator. The vapor from this drum is sent to Plant 6, the liquid is sent to the Product Distillation Surge Drum, and the water phase is sent to the Sour Water Flash Drum. Some of the liquid from the Recycle Slurry Hold Drum is pumped as recycle solvent back, using pump G110 to the coal slurry tank with the remainder being sent to the Product Distillation Surge Drum.

Product Fractionation

As shown in Figure 7.3, the liquid products from the three low pressure separators in the coal liquefaction plant are sent to the Product Distillation Feed Flash Drum (C126) from where the combined stream is pumped through the Atmospheric Feed Heater (F103) to the Atmospheric Distillation Tower (C118). Vapors from the surge drum are vented directly to the atmospheric tower. Two products are taken from the Atmospheric Tower Overhead Accumulator (C120): a naphtha product (IBP - 350°F) which is sent as feed to the Naphtha Hydrotreater via Plant 3, where Naphtha is used as lean oil; and a sour water stream which is sent to the Wash Water Surge Drum (C115) on the Coal Liquefaction Plant. An overhead vapor stream from the overhead accumulator is compressed by Compressor (K102) and sent to Plant 6. A sidestream product (350°F+) is withdrawn from a sidestream stripper (C119) and sent as feed to the Gas Oil Hydrotreater via cold (110°F) intermediate tankage. The bottoms stream off the atmospheric tower is pumped to two dispositions: as recycle solvent back to the Coal Slurry Tank with the remainder being sent to the Vacuum Feed Heater (F104) ahead of the Vacuum Distillation Tower (C122). Three products are taken overhead from the vacuum tower: a light gas oil product (450°F+) which is sent to the Gas Oil Hydrotreater via the same intermediate tankage as the atmospheric sidestream product; an overhead vapor stream which is compressed and sent to Plant 6; and a sour water stream which is sent to the wash water surge drum on the Coal Liquefaction Plant. An upper sidestream product (≈550°F - 850°F) is withdrawn and sent to the Gas Oil Hydrotreater via hot (400°F) intermediate tankage. A lower sidestream product (850°F - 1000°F) is withdrawn from a sidestream stripper (C123) and sent as recycle solvent back to the Coal Slurry Tank. The vacuum tower bottoms stream is sent to the solids-liquids separation unit, Plant 8.

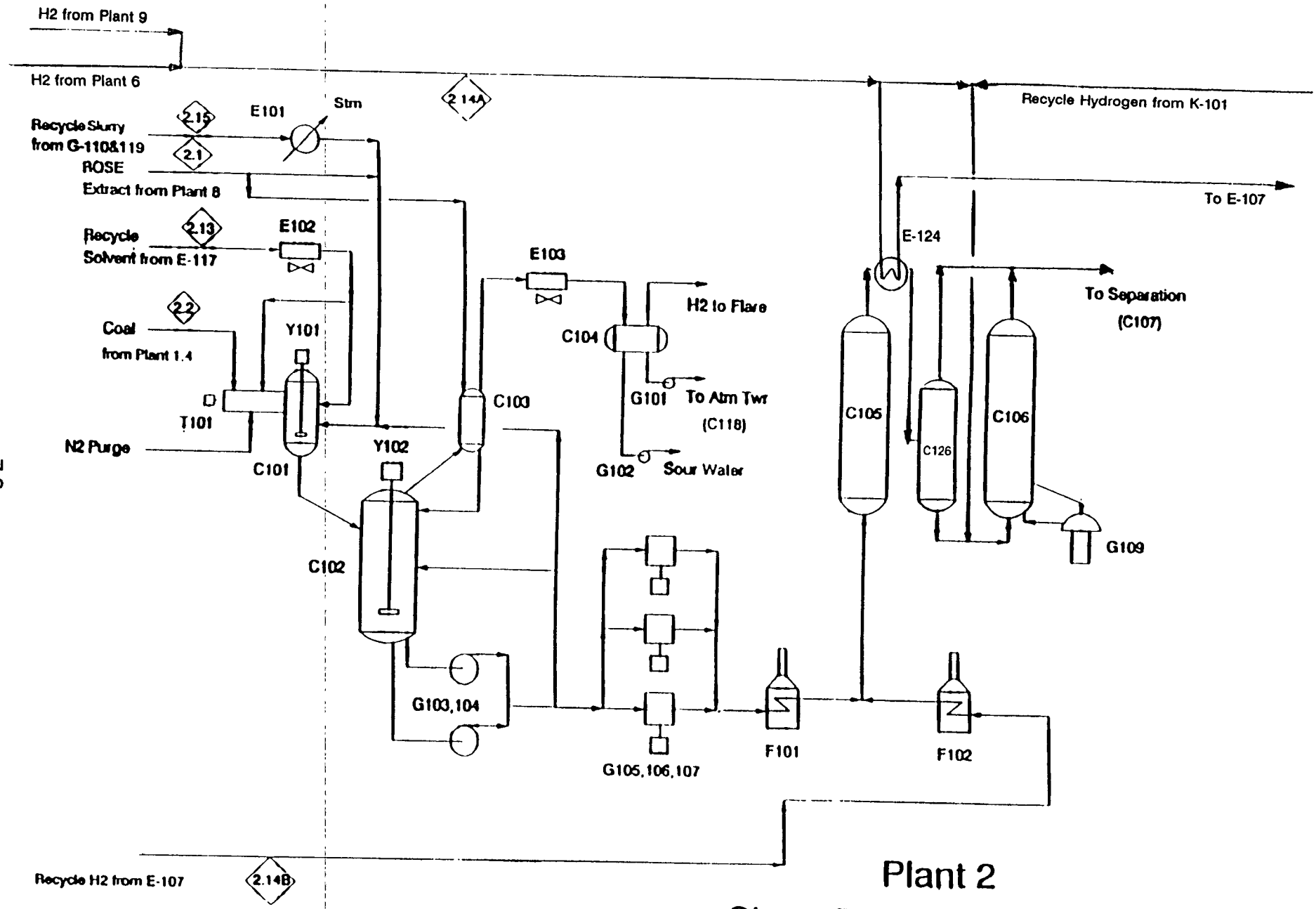

Plant 2
Slurry Preparation / Reaction

Figure 7.1 Process Flow Diagram

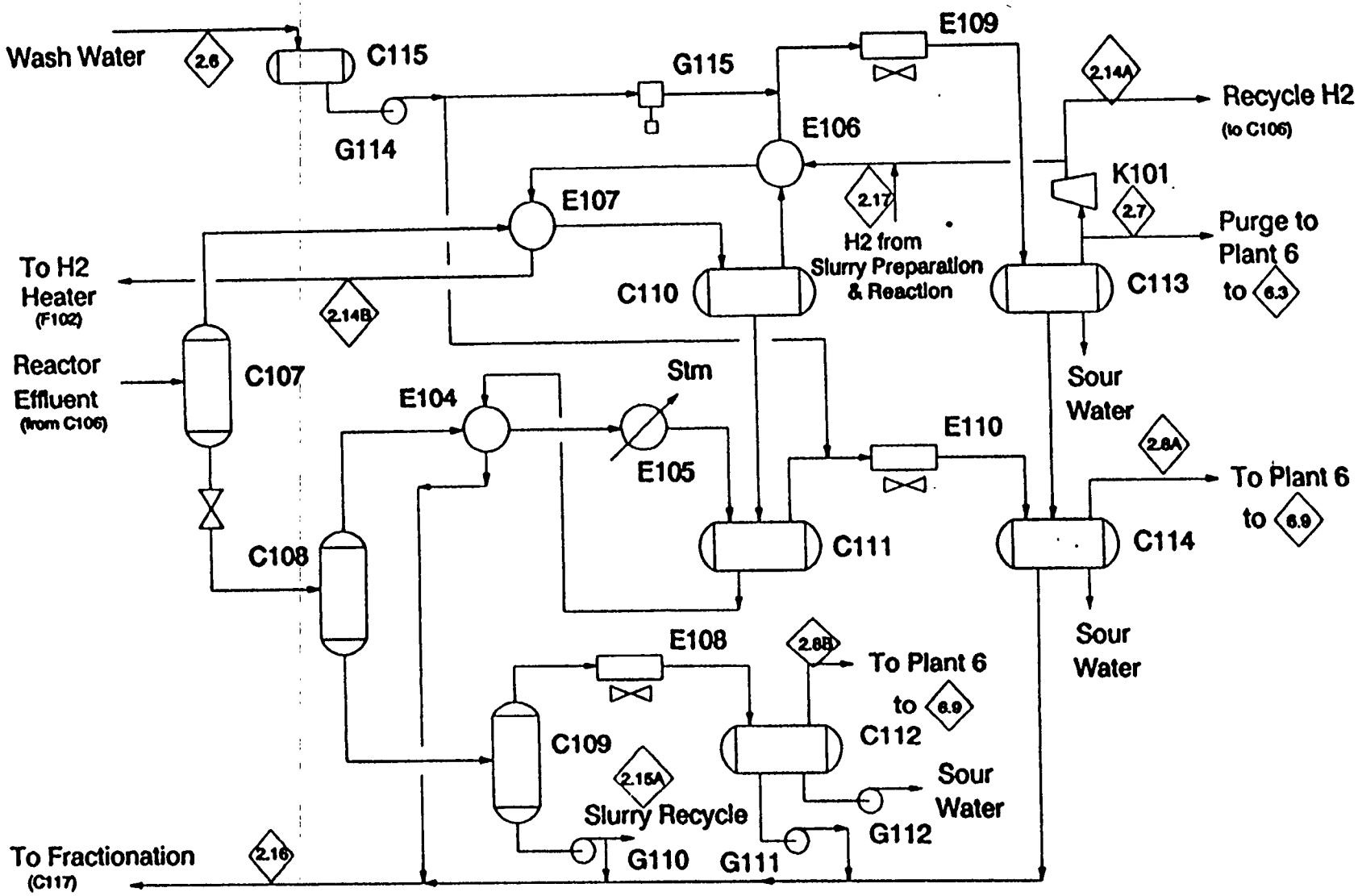

Plant 2
Primary Separation

Figur 7.2 Process Flow Diagram

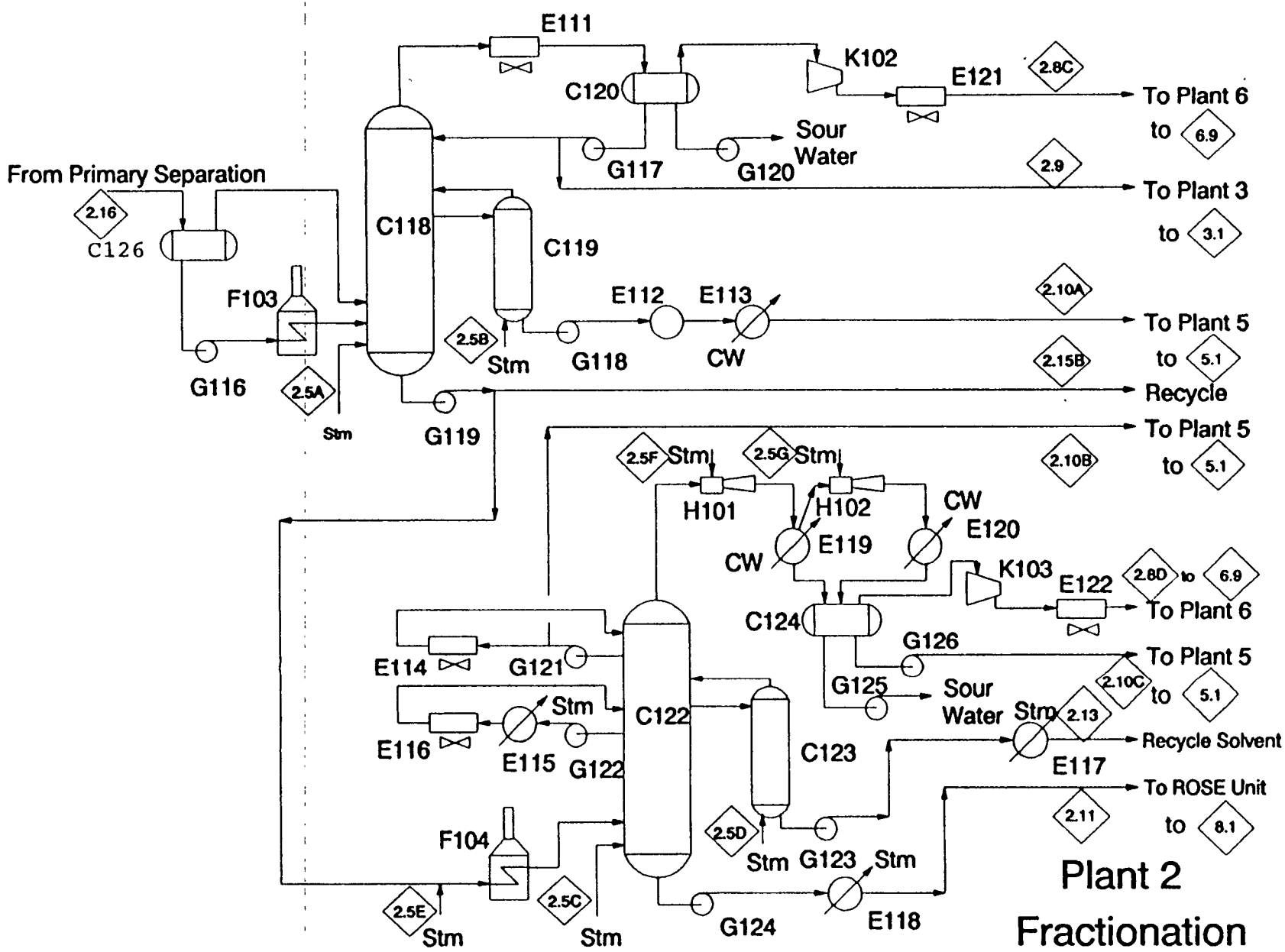

Figur 7.3 Proc ss Flow Diagram

7.3 Material Balance

Plant 2 consists of 4 operating trains. The material balance per train is shown in Table 7.3. The overall material balance per train for the Plant 2 is schematically shown in Figure 7.4.

Table 7.3

Low Rank Coal Case
Plant 2
Material Balance (P r Train)
For 1 of 4 Trains

PLANT 2 : INPUT

Stream No.	2.2	2.3	2.4	2.6	2.5	2.1			
Components (Lb/Hr)	Coal	PL-9 H2 MakeUP	PL6 H2 Recycle	Wash Water	Steam	ROSE Extract	Cracked HC's	Reactor Delta	Total Input
H2O	7,623		254	156,250	67,790			54,343	231,917
H2S								735	
NH3								2,591	
CO								6,650	
CO2								15,469	
H2		20,300	8,759					(20,300)	29,059
N2		2,850	132						2,982
C1			3,240					9,380	3,240
C2			1,836				118	6,581	1,954
C3			1,450				57	6,965	1,507
C4			546				76	3,922	622
C5-350			250					34,650	250
350-450								25,865	
450-650						5		77,628	5
650-850						752	806	71,923	1,558
850-1000						1,349	(254)	1,911	1,095
1000+						53,613	(803)	25,133	52,810
Phenols								957	
Coal (MAF)	349,988							(324,403)	349,988
Ash	23,532								23,532
Total	381,143	23,150	16,467	156,250	67,790	55,719	0	0	700,519
Temp,F	400	100	130	120	650	400	—	—	—
Pres,Psig	3,100	3,235	—	2,960	—	3,100	—	—	—

PLANT 2 : OUTPUT

Stream No.	2.7	2.8	2.9	2.10	2.11	2.12			
Components (Lb/Hr)	HP Gas to PL-6	LP Gas to PL-6	Naphtha to PL-3	Gas Oil to PL-5	ROSE Feed	Sour Water	Recycle Water		Total Output
H2O	47	1,763	11	75	1	215,702	68,661		286,260
H2S	274	184	4			273			735
NH3		30	6			2,555			2,591
CO	5,403	1,247							6,650
CO2	6,220	2,751	22			6,476			15,469
H2	6,995	1,764							8,759
N2	2,440	542							2,982
C1	9,301	3,312	2			5			12,620
C2	5,135	3,255	142			3			8,535
C3	4,042	4,204	226						8,472
C4	1,497	2,593	454						4,544
C5-350	1,730	7,078	25,226	866					34,900
350-450	23	95	440	25,307					25,865
450-650	1	1	7	77,621	3				77,633
650-850				72,728	753				73,481
850-1000				1,025	1,981				3,006
1000+					77,943				77,943
Phenols						957			957
Coal(uncon)					25,585				25,585
Ash					23,532				23,532
Total	43,108	28,819	26,540	177,622	129,798	225,971	68,661		700,519
Temp,F	120	150	130	130	400	87	222		—
Pres,Psig	2,950	45	50	100	90	50	50		—

Figur 7.4 Ov rall Mat rial Balance (per train)

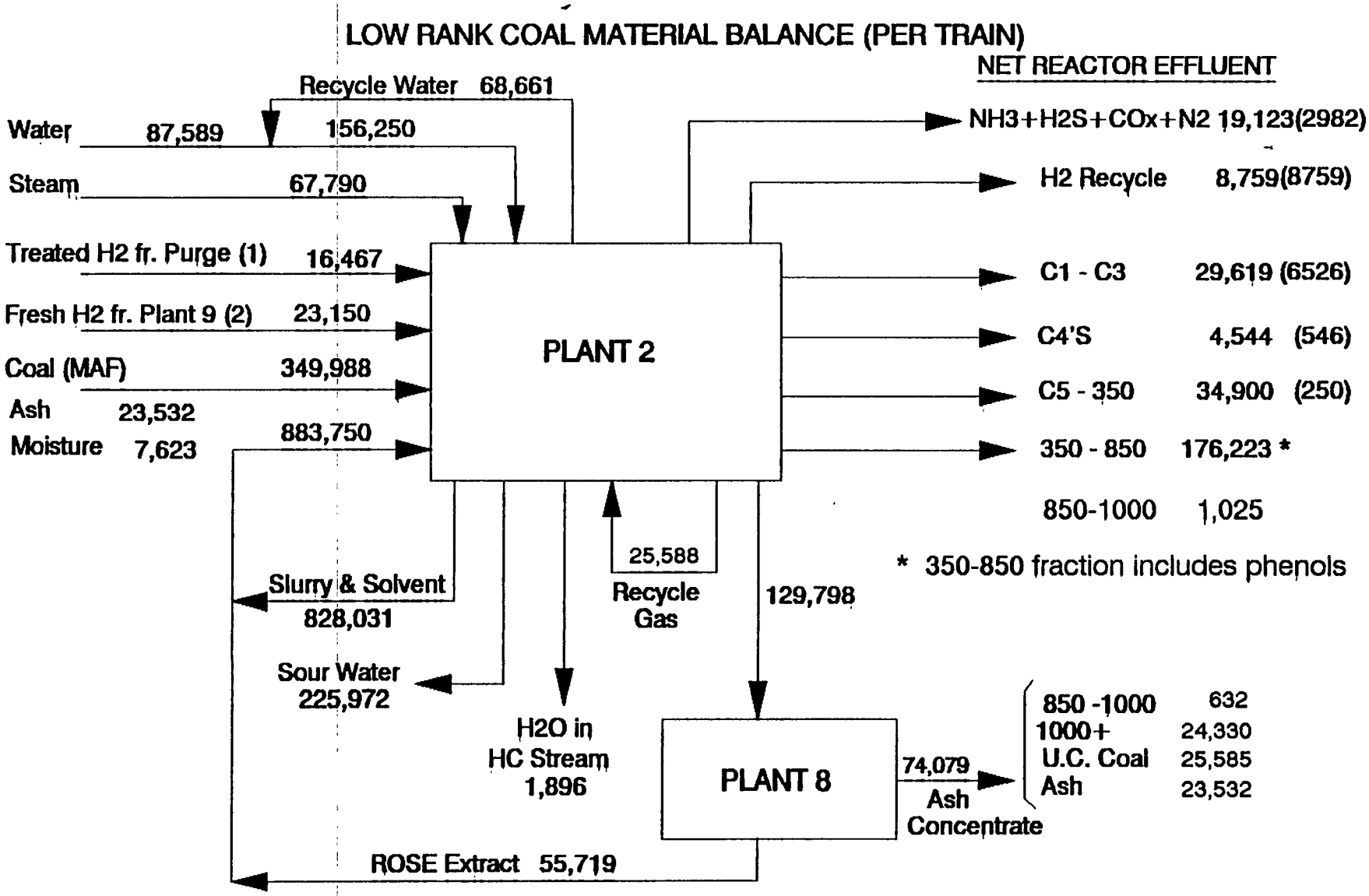

NOTES: . Flow rate in lbs/hr
. Number in parenthesis is due to input streams (1) & (2). Ther for , to calculate the % yield subtract out the corresponding number in parenthesis.
. Th HC's in sour water are shown in net reactor effluent.

LRCMB.DRW 10/93

7.4 Utility Summary

The utility summary for the coal liquefaction plant (Plant 2) is presented in Table 7.4.

Table 7.4

PLANT 2 UTILITY SUMMARY

Steam, lb/hr	
600 psig/720°F	6,000
600 psig sat'd	-97,000
150 psig	-46,000
50 psig	-58,000
Cooling Water, gpm	8,829
Fuel Gas, MMBTU/Hr	1,667
Electricity, Kw	41,080
Nitrogen, MMSCFD	1.44

Note: Negative values represent utility production.

The major equipment list for Plant 2 is shown in Table 7.5.

7.5 Wat r Summary

The water summary for the coal liquefaction plant (Plant 2) is included in Table 7.5.

Table 7.5

WATER SUMMARY (per train), Plant 2

Water Inlet	lb/hr
Coal feed	7,623
Produced in Reactors	54,343
Wash Water	156,250
Steam	67,790
Recycle H2 from Plant 6	254
TOTAL	286,260

Water Outlet	
Sour Water to NH_3 Recovery	215,702
Recycled to Wash Water	68,661
Hydrogen Purge	47
Low Pressure Gases to Plant 3	1,763
Products to Plants 4 and 5	86
TOTAL	286,259

Wash Water Summary	
Requirements	156,250
Separator Water Recycled	68,661
Makeup Wash Water	87,589

7.6 Catalyst and Chemical Summary

Catalyst and chemicals required for Plant 2 are shown below:

Catalyst or Chemical	Criterion 324	Molyvan L	Iron Oxide	DMDS
Quantity required for start-up	733,500 lb.	17,930 lb	1,679,900 lb	987,000 lb
Consumption	53,790 lbs/day	3,590 lbs/day	335,980 lbs/day	197,390 lbs/day

7.7 Operating Manpower Requirements

The operating manpower requirements for this complex is 32 operators.

7.8 Major Equipment Summary

The major equipment list for Plant 2 is shown in Table 7.6.

Table 7.6
MAJOR EQUIPMENT SUMMARY
LOW RANK COAL

Plant 2 - Coal Liquefaction

Reactors and Vessels

Equipment No.	Equipment Description	Length (T-T in ft.)	Diameter (ID in ft.)	Material	Design Conditions Pres (psig)	Design Conditions Temp (°F)	Orientation	Comments
COAL SLURRY PREPARATION								
2.1- C101	Slurry Vortex Mx Tnk Innr Shll	13.0	13.0	A-515	10	750	Vertical	
	Slurry Vortex Mx Tnk Outr Shll	18.0	15.0	A-515	10	750	Vertical	
2.1- C102	Slurry Surge Tank	50.0	20.0	A-285	10	750	Vertical	
2.1- C103	Slurry Srge Tank Vent Scrubber	34.0	5.0	A-516	10	450	Vertical	
2.1- C104	Scrubber Overhead Receiver	11.0	4.0	A-516	10	400	Horizontal	
REACTION SYSTEM								
2.3- C105	Coal Liquefaction - Stage 1	56.0	14.0	2-1/4Cr, 1Mo	3300	850	Vertical	(1)
2.4- C106	Coal Liquefaction - Stage 2	56.0	14.0	2-1/4Cr, 1Mo	3300	600	Vertical	(2)
2.3- C126	Interstage Flash Drum	21.0	10.5	SA387-GR22 CL2	3300	600	Vertical	(2)
PRIMARY SEPARATION								
2.5- C107	Hot High Pressure Separator	30.0	14.0	SA387-GR22 CL2	3300	850	Vertical	(3)
2.5- C108	Hot Low Pressure Separator	28.0	14.0	CS	150	800.0	Vertical	
2.5- C109	Recycle Slurry Hold Drum	25.0	12.0	CS	50.0	800.0	Vertical	
2.5- C110	Warm High Pressure Separator	25.0	12.0	SA387-GR22 CL2	3300.0	600.0	Vertical	(4)
2.5- C111	Warm Low Pressure Separator	34.0	10.0	CS	100.0	500.0	Horizontal	
2.5- C112	Recy Slry Hold Drm Cond Accu	14.0	4.0	A-516	50.0	700.0	Horizontal	Boot: 1.5'D X 3'
2.5- C113	Cold High Pressure Separator	35.0	12.0	SA387-GR11 CL2	3300.0	450.0	Horizontal	(5)
2.5- C114	Cold Low Pressure Separator	36.0	11.0	CS	100.0	450.0	Horizontal	
2.5- C115	Wash Water Drum	20.0	8.0	CS	10.0	150.0	Horizontal	
2.5- C116	Sour Water Drum	22.0	9.0	CS	50.0	150.0	Horizontal	
2.5- C117	Compressor Knockout	15.0	7.0	Carbon Steel	3300.0	450.0	Vertical	

* NOTE: Equipment shown is for a single train. There are four total trains.

Table 7.6

MAJOR EQUIPMENT SUMMARY - CONTINUED

Reactors and Vessels, cont.

Equipment No.	Equipment Description	Length (T-T in ft.)	Diameter (ID in ft.)	Material	Design Conditions Pres (psig)	Design Conditions Temp (°F)	Orientation	Comments
CRUDE PRODUCT FRACTIONATION-ATMOSPHERIC TOWER								
2.6- C120	Overhead Accumulator	24.0	8.0	CS	10.0	300.0	Horizontal	Boot: 2.5'D X 4'
2.6- C121	Vent Gas Compress Knockout	9.0	6.0	CS	10.0	200.0	Vertical	
2.6- C126	Feed Flash Drum	24.0	11.0	A-387	150	800.0	Vertical	
CRUDE PRODUCT FRACTIONATION-VACUUM TOWER								
2.6- C124	Vacuum Jet Condenser Accum	18.0	5.0	CS	10.0	400.0	Horizontal	
2.6- C125	Vent Gas Compress Knockout	10.0	5.0	CS	10.0	150.0	Vertical	

Comments:

(1) 11.8 thick, 1282 ST, 347 SS Overlay
(2) 11.8" thick, 1282 ST, 347 SS Overlay, 6" Refractory Lined
(3) 347 SS clad, refractory lined
(4) 347 SS clad
(5) 321 SS clad

Towers

Equipment No.	Equipment Description	Height (T-T in ft.)	Diameter (ID in ft.)	Material	Design Conditions Pres (psig)	Design Conditions Temp (°F)	No. of Trays	Type of Trays
CRUDE PRODUCT FRACTIONATION								
2.6- C118	Atmospheric Fractionator	150	Trays 1-20: 10'	CS	50	800.0	20	Sieve Tray: 410SS Internals
			Trays 21-44: 7'				24	Sieve
			Trays 45-48: 4'6"				4	Grid
2.6- C119	AGO Stripper	30	3'6"	CS	50	700.0	10	Sieve Tray: 410SS Internals
2.6- C122	Vacuum Fractionator	60	Trays 1-12:14'	A-516	FV / 10	800.0	12	Sieve
			Trays 13-18: 20'				6	Sieve
			Trays 19-22: 9'				4	Grid
2.6- C123	Vac Recy Solvent Stripper	30	5'6"	CS	FV / 10	700.0	10	Sieve

Table 7.6

Major Equipment List - continued

Fire Exchangers

Equipment No.	Equipment Description	Absorbed Duty (MM Btu/hr)	Fired Duty (MM Btu/hr)	Tube Material	Design Conditions Pres (psig)	Design Conditions Temp (°F)	
REACTION SYSTEM							
2.2- F101	Coal Slurry Heater	156.6	181.3	347 SS	3300	850.0	
2.3- F102	Gas Heater	65.7	72.5	347 SS	3300	850.0	
CRUDE PRODUCT FRACTIONATION							
2.6- F103	Atmospheric Fractionator Htr	32.0	45.7		200	800.0	Rad: 5 CR 1/2 MO Conv: CS
2.6- F104	Vacuum Fractionator Preheater	25.4	36.3		200	800.0	Rad: 5 CR 1/2 MO Conv: CS

Table 7.6

Major Equipment List - continued

Heat Exchangers

Equipment No.	Equipment Description	Duty (MM Btu/hr)	Type of Exchanger	No. Shells/ Area/Shell (sq ft)	Design Conditions Tube P/T (psig/°F)	Design Conditions Shell P/T (psig/°F)	Material of Construction Tube	Material of Construction Shell	Air-Fin BHP	Notes
COAL SLURRY PREPARATION										
2.1- E101	Recycle Slurry Steam Generator	48.0	Shell & Tube	1/ 4910	150 / 450	200 / 400	321 SS			
2.1- E102	Recycle Solvent Cooler	6.0	Air-Fin	1/ 1320	150 / 450		316 SS		30.0	
2.1- E103	Slurry Srge Tank Overhead Con	9.0	Air-Fin	1/ 1020	10 / 450		A-516 w/304 LSS Clad		45.0	
REACTION SYSTEM										
2.3- E124	Reactor No. 1 EFF Exch	25.4	Shell & Tube	1/ 850	3300 / 875	3250 / 875	321 SS	2-1/4 CR-1 MO		
PRIMARY SEPARATION										
2.5- E104	Hot LP Sep Vap Cooler	33.0	Shell & Tube	1/ 5840	100 / 650	150 / 800	SA516-70 w/304 LSS Clad			
								387 GR2 w/304 LSS Clad		
2.5- E105	Hot LP Sep Vap Steam Gen	12.1	Shell & Tube	1/ 1480	200 / 400	150 / 750		SA516 GR70		
2.5- E106	1st Hydrogen Preheater	84.9	Shell & Tube	1/ 8350	3500 / 250	3300 / 600	304 LSS	304 LSS 2-1/4 CR/M Cl ad		
2.5- E107	2nd Hydrogen Preheater	62.9	Shell & Tube	1/ 6900	3500 / 400	3300 / 850	304 LSS	304 LSS 2-1/4 CR/1 MO Clad		
2.5- E108	Slurry Hold Drum Vap Cond	5.1	Air-Fin	1/ 970	50 / 800		316 LSS		25.0	
2.5- E109	Warm HP Sep Vap Cooler	28.7	Air-Fin	1/ 4570	3300 / 350		316 LSS		143.0	
2.5- E110	Warm LP Sep Vap Cooler	37.8	Air-Fin	1/ 6680	150 / 300		Monel		189.0	
2.5- E123	Liquid Cooler	22.4	Air-Fin	1/ 3960		---	CS		112.0	
CRUDE PRODUCT FRACTIONATION-ATMOSPHERIC TOWER										
2.6- E111	Atmos Frac Ovhd Condenser	49.3	Air-Fin	1/ 11420	10 / 300		CS		246.0	
2.6- E112	AGO Product Cross Exchanger	7.1	Shell & Tube	1/ 3280	100 / 400	100 / 450	CS	CS		
2.6- E113	AGO Product Cooler	13.2	Air-Fin	1/ 3070	100 / 150		CS		66.0	
2.6- E121	Atm VG Comp Aftercooler	0.1	Air-Fin	1/ 50	50 / 300		CS		1.0	
CRUDE PRODUCT FRACTIONATION-VACUUM TOWER										
2.6- E114	LVGO Pumparound Cooler	7.8	Air-Fin	1/ 2570	100 / 300		11-13 CR		39.0	(1)
2.6- E115	HVGO Pumparound Steam Gen	25.0	Shell & Tube	1/ 6490	100 / 700	200 / 400	11-13 CR	SA516		(2)
2.6- E116	HVGO Pumparound Cooler	2.4	Air-Fin	1/ 210	100 / 450		11-13 CR		12.0	(1)
2.6- E117	HVGO Product Steam Gen	7.2	Shell & Tube	1/ 2090	150 / 650	200 / 400	11-13 CR	SA516		
2.6- E118	Bottoms Product Steam Gen	19.9	Shell & Tube	1/ 4430	150 / 750	200 / 400	11-13 CR	SA516		
2.6- E119	1st Steam Jet Condenser	30.8	Shell & Tube	1/ 3070	100 / 150	10 / 400	11-13 CR			(2)
2.6- E120	2nd Steam Jet Condenser	0.1	Shell & Tube	1/ 15	100 / 150	10 / 400	11-13 CR			
2.6- E122	Vac VG Aftercooler	0.1	Air Fin	1/ 50	100 / 150		CS		1.0	

Notes:

(1) Design tubes for full vacuum (FV)

(2) Design shell for full vacuum (FV)

Sheet 1

Table 7.6
Maj r Equipm nt List - continued

Compressors

Equipment No.	Equipment Description	Case	Flow Rate (MMSCFD)	Brake Horsepower	Design Conditions Pres Inlet (psig)	Pres Outlet (psig)	Temp (°F)	Driver	#Required
PRIMARY SEPARATION									
2.7- K101	Recycle Hydrogen		284	1,900	2,955	3,235	200.0	Elect Motor	1
CRUDE PRODUCT FRACTIONATION									
2.6- K102	Atmospheric Vent Gas		0.2	8	2	20	180.0	Elect Motor	1
2.6- K103	Vacuum Vent Gas		0.06	8	2	20	200.0	Elect Motor	1

Pumps

Equipment No.	Equipment Description	Case	Flow Rate (gpm)	Delta Pres (psi)	Brake Horsepower	Design Conditions Pres (psig)	Temp (°F)	Driver	#Required
COAL SLURRY PREPARATION									
2.1- G101	Scrubber Condenser Product	316 SS	1.0	100.0	1.0	150.0	200.0	Elect Motor	2
2.1- G102	Scrubber Sour Water	316 SS	20.0	50.0	1.0	100.0	200.0	Elect Motor	2
2.1- G103	Coal Slurry Booster Pump	HC250 26% CHR	1500.0	70.0	82.0	100.0	450.0	Elect Motor	3
REACTION SYSTEM									
2.3- G105	Slurry Charge		729.0	3025.0	4700.0	3300.0	450.0	Elect Motor	4
2.4- G109	Stage 2 Ebullating	347 SS	----------	----------	Proprietary	----------	----------	----------	2
PRIMARY SEPARATION									
2.5- G110	Slurry Recycle Pump	Monel	1718.0	105.0	140.0	150.0	800.0	Elect Motor	2
2.5- G111	Recy Slr Hld Drm Cnd Acm Liq	S-6	21.0	50.0	1.0	100.0	200.0	Elect Motor	2
2.5- G112	Recy Slr Hld Dr Cnd Ac Sr Wtr	C-6	1.0	40.0	1.0	100.0	200.0	Elect Motor	2
2.5- G113	Sour Water Drum Pump	C-6	435.0	40.0	14.0	100.0	200.0	Elect Motor	2
2.5- G114	Wash Water LP Pump	C-6	316.0	80.0	20.0	100.0	200.0	Elect Motor	2
2.5- G115	Wash Water HP Pump	C-6	43.0	2930.0	97.0	3400.0	200.0	Elect Motor	2

Sheet 1

Table 7.6
MAJOR EQUIPMENT SUMMARY - CONTINUED

Pumps, cont.

Equipment No.	Equipment Description	Case	Flow Rate (gpm)	Delta Pres (psi)	Brake Horsepower	Design Conditions Pres (psig)	Design Conditions Temp (°F)	Driver	#Required
CRUDE PRODUCT FRACTIONATION-ATMOSPHERIC TOWER									
2.6- G116	Atmos Heater Charge	13 CR	731.0	150.0	85.0	200.0	800.0	Elect Motor	2
2.6- G117	Reflux/Naphtha Product	S-5	70.0	45.0	2.0	100.0	200.0	Elect Motor	2
2.6- G118	AGO Product	S-6	292.0	65.0	15.0	100.0	450.0	Elect Motor	2
2.6- G119	Bottoms Product	13 CR	530.0	105.0	43.0	200.0	750.0	Elect Motor	2
2.6- G120	Atmos Ovhd Accum Sour Wat	A-7	16.0	45.0	1.0	100.0	200.0	Elect Motor	2
CRUDE PRODUCT FRACTIONATION-VACUUM TOWER									
2.6- G121	LVGO Pumparound	C-6	138.0	70.0	8.0	FV / 100	300.0	Elect Motor	2
2.6- G122	HVGO Pumparound	13CR Case 25	227.0	45.0	9.0	FV / 100	700.0	Elect Motor	2
2.6- G123	HVGO Product	13CR Case	186.0	115.0	16.0	FV / 150	650.0	Elect Motor	2
2.6- G124	Bottoms Product	13CR Case 25	172.0	115.0	15.0	FV / 150	750.0	Elect Motor	2
2.6- G125	Vacuum Jet Accum Sour Water	A-7	35.0	100.0	3.0	100.0	150.0	Elect Motor	2
2.6- G126	Vacuum Jet Accum Product	S-6	3.0	100.0	1.0	100.0	150.0	Elect Motor	2
2.6- G127	Recycle Slurry	Monel	1338.0	2875.0	2991.0	3200.0	800.0	Elect Motor	2
2.6- G128	Recycle Slurry (HVGO)	13 CR Case	176.0	2910.0	398.0	3200.0	650.0	Elect Motor	2

Miscellaneous

Equipment No.	Equipment Description	Flow Rate	Other Design Criteria	Design Conditions Pres (psig)	Design Conditions Temp (°F)
COAL SLURRY PREPARATION					
2.1- T101	Coal Prewetting Feeder		22' X 41' X 31', 85 bhp		
2.1- Y101	Slurry Vortex Mix Tank Mixer		105 bhp		
2.1- Y102	Slurry Surge Tank Mixer		85 bhp		
REACTION SYSTEM					
2.9/2.10	Catalyst Handling System	----------	Proprietary ----------		
CRUDE PRODUCT FRACTIONATION-VACUUM TOWER					
2.6- H101	1st Vacuum Steam Jet	58000 lb/hr	area ratio = 50	200	400.0
2.6- H102	2nd Vacuum Steam Jet	300 lb/hr	area ratio = 25	200	400.0

7.9 HRI's Report

Following is the complete HRI report on their portion of the Plant 2 design.

HRI REPORT

DOE DIRECT COAL LIQUEFACTION
BASELINE DESIGN AND SYSTEMS ANALYSIS
LOW RANK COAL LIQUEFACTION STUDY

Prepared by:

HRI, INC.
100 Overlook Center, Suite 400
Princeton, N.J. 08540

Prepared for:

Bechtel Corporation
300 Post Oak Road
Houston, Texas 77252

September 1993

® HRI, Inc.
100 Overlook Center, Suite 400
Princeton, New Jersey 08540
609/243-8700 Fax 609/987-0204

RECEIVED
SEP 14 1993
SYAMAL K. PODDAR

September 13, 1993

Reference: 93/JED/85

Via Courier

Dr. S. K. Poddar
Bechtel
3000 Post Oak Boulevard
Houston, TX 77252

Dear Syamal:

Subject: **DOE Low Rank Coal Liquefaction Study**
Contract No. 20952-003-LA-001-HAC
HRI Technical Data Package

The enclosed report presents HRI's technical data package for the work performed for the high pressure coal liquefaction section for Bechtel's DOE Low Rank Coal Liquefaction Study.

Very truly yours,

John E. Duddy
Project Manager

JED/krr
Enc.

DISCLAIMER

This HRI Design Report for the DOE Baseline Design for Direct Coal Liquefaction presents information necessary for Bechtel to complete a preliminary conceptual commercial design of a two-stage catalytic coal liquefaction facility. The design information contained herein is not sufficient to proceed with the detailed design, procurement or construction for a commercial plant. No licensees, guarantees, or warranties are contained in this report either written or implied.

TABLE OF CONTENTS

HRI SCOPE OF WORK 1

BACKGROUND 3

DESIGN BASIS 6

LIQUEFACTION SECTION DESIGN 11
Process Description 11

LIST OF TABLES

Table

1 DOE Low Rank Coal Study 7
2 Overall Material Balance Flow Rates in LBS/HR 16
3 Battery Limits Streams 17
4 Equipment List - Pumps 18
4 (cont'd) Equipment List - Reactors 19
4 (cont'd) Equipment List - Heaters 20
4 (cont'd) Equipment List - Exchangers 21
4 (cont'd) Equipment List - Drums 22
4 (cont'd) Equipment List - Compressors 23
4 (cont'd) Equipment List - Special 24
5 Utility, Catalyst and Chemical Requirements 25

LIST OF FIGURES

Figure

1 DOE Direct Coal Liquefaction Sub-Bituminous Coal 15

DOE DIRECT COAL LIQUEFACTION
BASELINE DESIGN AND SYSTEM ANALYSIS
LOW RANK COAL LIQUEFACTION STUDY

HRI SCOPE OF WORK

As part of Bechtel's project with the U.S. Department of Energy (DOE) for development of a direct coal liquefaction baseline design for low rank coal, HRI has performed the preliminary process design of a portion of the liquefaction section, under a subcontract with Bechtel. HRI's scope of work included the following portions of the liquefaction section:

- preheating
- first-stage reactor
- second-stage reactor
- high pressure separation
- recycle hydrogen compression

The baseline design is for a full-scale commercial facility, containing maximum-sized reaction trains, based on design basis information provided by Bechtel. The engineering work performed by HRI was preliminary in nature, but of sufficient detail for Bechtel to prepare a meaningful budget-type cost estimate. The engineering design is not adequate to proceed into detailed engineering nor to purchase equipment. A summary of work performed is as follows:

- Process Flowsheets were prepared showing major equipment and flows.
- Process Description is provided explaining the process flow through the steps identified within the battery limits.

Overall Material Balance showing composition, conditions and rates of all battery limits process streams.

- Utility, Catalyst and Chemicals requirements were estimated.
- Equipment List and Process Data for the major equipment were prepared.

HRI's work on this project was based on our experience in the design of direct coal liquefaction plants and design basis information provided by Bechtel. It is important to note that HRI's scope of work did not include development of any design basis information.

BACKGROUND

Hydrocarbon Research, Inc. is the inventor, developer, and licensor of the ebullated-bed reactor, the H-Oil® Process, the H-Coal® Process and Catalytic Two-Stage Coal Liquefaction (CTSL™) Process. As part of the H-Coal Process development program, HRI scaled-up the H-Coal® Process from bench, to PDU (3 ton/day), to the Catlettsburg H-Coal Pilot Plant. The H-Coal Pilot Plant was designed to convert up to 600 tons of coal a day into as many as 1800 barrels of heavy fuel oil to distillate products or 675 barrels of synthetic crude from 200 tons a day. The plant was operated from 1979 to 1982. The demonstration program was very successful confirming scaleup of the H-Coal process chemistry, establishing process mechanical operability and reliability in commercial scale equipment, and collecting engineering design data on critical equipment such as slurry preheaters, let-down valves, and slurry pumps.

Based on the successful demonstration program at Catlettsburg, HRI participated with Ashland Oil and Bechtel in the complete design and engineering of a commercial-scale H-Coal plant producing 50,000 barrels per day of synthetic crude product. HRI provided the process design "A" package for the H-Coal section including:

- coal slurry mixing and pumping
- preheat and reaction section
- product separation
- recycle slurry preparation
- product fractionation
- hydrogen compression and recycle

More than 35,000 manhours were expended by HRI to complete this design. As the price of oil fell from over $40 per barrel to $25 per barrel, the decision was made not to proceed with this commercial H-Coal project.

From 1982 to the current time, HRI has continued to conduct research and development on direct coal liquefaction. In 1983, HRI invented the direct-coupled two-stage catalytic coal liquefaction process (CTSL). This work was sponsored by the U.S. Department of Energy and cost shared by HRI.

The CTSL Process concept utilized a low temperature first stage (<800°F) for hydrogenation of coal feed and recycle slurry followed by a higher temperature (>800°F) hydroconversion second stage. Improvements were further made in optimizing recycle to extinct VGO and/or residuum produced from coal liquefaction. Slurry recycle rates were reduced from greater than 2.5 parts recycle per part coal to about 1.2/1 recycle to coal ratio. Deep coal cleaning was further demonstrated in increase liquid yields from coal.

Liquid yields were increased from 3 barrels per ton of moisture ash free coal to over 5 barrels per ton for the Illinois No. 6 bituminous coal. Product qualities were improved in that the distillate products were more aliphatic (more petroleum like) and had significantly reduced sulfur and nitrogen levels and improved compatibility and stability.

HRI prepared conceptual commercial plant designs for the U.S. Department of Energy for CTSL processing of Illinois No. 6 bituminous coal and Wyoming sub-bituminous coal. Economics were prepared showing substantial reduction in the cost of producing liquid fuels from coal. Separate studies by Mitre confirmed that the CTSL Process as developed by HRI could produce liquid fuels from coal at lower cost than second generation technologies (EDS, H-Coal Process) or evolving third generation technologies (NTSL, ITSL, RITSL, CTSL). As stated by Dr. G.V. McGurl, DOE Project Manager, in the October 10, 1988 edition of Chemical & Engineering News- " of the several processes proposed thus far, the best is the catalytic two-stage process developed by Hydrocarbon Research, Inc. It produces the highest yield of liquid product having the highest quality and does it at a lower cost than previous processes".

At the request of DOE and Bechtel, HRI has developed a preliminary conceptual process design for the high pressure section (preheaters to high pressure product separators) of a two-stage ebullated-bed catalytic reactor system for this Baseline Design utilizing low rank coal.

DESIGN BASIS

The design basis for the baseline design was prepared by Bechtel and provided to HRI. It was based on operations at Wilsonville on Black Thunder Mine Sub-bituminous Coal (Runs 262E and 263J). These operations used a soluble dispersed Molybdenum (Molyvan L) catalyst in the first-stage and Criterion 324 extrudates in the second-stage. The first-stage reactor was operated at 825°F, while the second-stage was operated at a lower temperature, 810°F. The coal feedrate was set to achieve a total liquid product rate of 60,000 barrels per stream day.

The design basis information provided by Bechtel is summarized in *Table 1*.

TABLE 1
DOE Low Rank Coal Study
Design Basis
(basis Wilsonville Runs 262E & 263J)
AS PROVIDED BY BECHTEL[1]

1) REACTOR OPERATING CONDITIONS

Coal Feed

Rate - to be determined based on the maximum coal throughput of the reactor system and the number of trains selected for a total product make (C_5 - 850°F) of approximately 60,000 B/D.

Proximate Analysis (wt%, dry basis):

Volatile Matter	44.7
Fixed Carbon	49.0
Ash	6.3

Elemental Analysis (wt%, dry basis):

Carbon	68.5
Hydrogen	4.8
Sulfur	0.5
Nitrogen	1.0
Oxygen (by difference)	18.9
Ash	6.3

Sulfur Form (wt%, dry basis):

Sulfate	0.01
Pyritic	0.10
Organic (by difference)	0.39

[1] letter, S.K. Poddar to J.E. Duddy, July 8, 1993.

Mineral Analysis of Ash (wt%, ignited):

Silica	35.75
Alumina	18.13
Titania	1.25
Ferric Oxide	5.25
Magnesia	4.22
Potassium Oxide	0.49
Sodium Oxide	0.47
Sulfur Trioxide	11.65
Phosphorus Pentoxide	1.00
Lime	20.42
Others	1.37

Temperature, °F

First Stage - 825
Second Stage - 810

Catalyst

First Stage Reactor:
Catalyst Type: Molyvan L (a soluble Molybdenum catalyst precursor)
Catalyst Addition Rate: 100 ppm Moly (based on MF coal)
Reactor Type: Slurry reactor with dispersed catalyst
Promoter: Iron Oxide at 1 wt% on MAF coal feed

Second Stage Reactor:
Catalyst Type: Criterion 324
Catalyst Bulk Density: 54 lb/ft^3
Catalyst Replacement Rate: 3 lb catalyst/ton MF coal
Reactor Type: Ebullated-Bed (H-Coal)
Space Velocity: 110 lb MF Coal / $hr\text{-}ft^3$ catalyst

Hydrogen Partial Pressure

Second Stage Reactor Outlet: 1950 psia

2) YIELDS AND PRODUCT QUALITIES

Product Yields, wt% MAF Coal

	First Stage	Overall
H_2S	0.16	0.21
H_2O	11.85	15.80
NH_3	0.55	0.74
CO	1.43	1.90
CO_2	3.31	4.42
C_1	1.21	2.68
C_2	0.85	1.88
C_3	0.89	1.99
C_4	0.58	1.12
C_5 - 350°F	2.45	9.90
350 - 450°F	2.88	7.39
450 - 650°F	8.20	22.17
650 - 850°F	7.35	19.85
850 - 1000°F	22.60 *	0.73
1000°F+	27.59 *	7.71
Unconverted Coal	11.00	7.30
Ash	6.72	6.72
Hydrogen Consumption	-2.90	-5.80

* estimated

Product Quality (API Gravity):

	First Stage (estimated)	Overall
IBP - 350°F	46.5	47.5
350 - 450°F	27.4	27.9
450 - 650°F	17.2	17.7
650 - 850°F	10.9	11.9
850 - 1000°F	0.9	1.0
1000°F+	-10.5	-9.5

3) BATTERY LIMIT STREAM CONDITIONS

Coal Slurry

Temperature, °F - 400
Solvent/MAF Coal Ratio - 2.525
Composition of solvent, wt%

Distillate	37.5
1000°F$^+$ Resid	41.4
Unconverted Coal + Ash	21.1

GC Simulated Distillation of Distillate, wt%

350 - 450°F	0.6
450 - 550°F	1.3
550 - 650°F	5.2
650 - 750°F	6.7
750 - 850°F	50.4
850 - 950°F	28.0
950 - 1000°F	7.7

Make-Up Hydrogen (from Hydrogen Plant #9)

Temperature, °F - 100
Composition, vol%
H_2 - 99.0
C_1 - 1.0

Recycle Hydrogen (from Hydrogen Purification Plant #6)

Temperature, °F - 130
Composition, vol%
H_2 - 93.0
C_1 - 4.3
C_2 - 1.3
C_3 - 0.7
C_4 - 0.2
C_5^+ - 0.1
H_2O - 0.3
N_2 - 0.1

LIQUEFACTION SECTION DESIGN

Based on the design basis information provided by Bechtel, HRI has completed the design of a case utilizing low rank sub-bituminous coal. This scheme contains a first-stage dispersed catalyst reactor, and a second-stage catalytic ebullated-bed reactor, the first stage operating at higher (825°F) temperature, and the second stage at lower temperature (810°F). As a part of this design HRI has performed a heat and material balance, major equipment sizing, and estimated utility, catalyst and chemicals requirements. The following is provided to describe the case:

- Process description
  Process flow diagram (Figure 1)
- Overall material balance (Table 2)
  Battery limits stream compositions and conditions (Table 3)
- Major equipment list (Table 4)
- Utility, catalyst and chemicals requirements (Table 5)

Process Description

Four reactor trains are required to process sufficient coal to produce approximately 60,000 BPSD of liquids. The major equipment in each of the reactor trains is numbered with the series 100 to 400 for each reactor train. Each train is identical and processes 4,200 tons per stream day of MAF coal per train, or 16,800 tons per stream day total. The description which follows is for a single train (100).

As shown in Figure 1, a portion of the make-up hydrogen stream, and a portion of the internal recycle hydrogen stream from the recycle Hydrogen Compressor (R-101) are joined. The combined hydrogen stream is first preheated by heat exchange against the reactor effluent vapor in M-101 and then in L-102, the gas heater.

The coal and coal slurry mixture is heated in L-101, joined with hydrogen from L-102, and then fed to the First-Stage reactor (K-101). Since there is no backmixing in K-101, provisions must be made for moderating the temperature rise caused by the heat of reaction. This is accomplished by introducing only a portion of the total gas along with the coal and coal slurry mixture at the inlet. The remainder is introduced as quench at multiple points along the reactor length. For this design, two quench points were used. As with K-102, emergency interstage quench with a solids free liquid is required. The Molyvan soluble catalyst is withdrawn from K-101 into a dump tank, S-101 (not shown in Figure 1).

Effluent from the first stage reactor enters exchanger M-101 where it is cooled by fresh hydrogen. The stream then enters drum (Q-101) where a separation is made between vapor and liquid. Vapor joins second-stage reactor effluent vapor. Liquid is quenched with the remaining hydrogen (fresh and recycle), and introduced into the bottom of the second-stage ebullated bed reactor (K-102). The interstage quench hydrogen flow rate is controlled to maintain the second stage reactor in heat balance. In the event of loss of the recycle gas quench or excessive reaction in the reactor, provisions need to be made to provide a solid free liquid stream for use as an emergency interstage quench. (Not shown in Figure 1).

The Reactor K-102 incorporates the principle of the ebullated-bed operation as successfully demonstrated in the Catlettsburg H-Coal® Pilot Plant and in the several operating commercial H-Oil® units around the world. The entire mass in the reactor is held in a fluidized ebullated state by recirculating coal-oil slurry from the top of the reactor through the ebullating pump and back into the bottom of the reactor. The ebullated bed ensures the reactor's near isothermal operation under the extreme exothermic reactions involved. Increasing the upward flow of the liquid mainly increases the catalyst bed expansion with essentially constant pressure drop. Since the coal particles are much finer than the extrudate catalyst, a separation can be made between these solids such that the coal and ash particles are entrained with the liquid-gaseous reactor effluent

products, while the catalyst remains behind in suspension in the reactor. The level of the expanded catalyst bed is observed by radiation detector points, and is maintained by adjusting the ebullating pump flow.

The catalyst in Reactor K-102 is maintained at the desired activity level by daily addition of fresh catalyst and corresponding withdrawal of equilibrium catalyst. A catalyst handling system (S-102) is used to add and withdraw catalyst to and from the reactor during normal operation. This system was not designed under the scope of work but the system cost has been estimated.

Hot reactor effluent from the top of the Second-Stage reactor (K-102) is separated into vapor and slurry phases in the Hot High Pressure Separator (Q-102). The resulting slurry is a net product from the battery limits defined.

Vapor from Q-102 joins Q-101 vapor and the combined stream is cooled by heat exchange against hydrogen feed gas in Exchanger (M-102). The vapor and liquid phases resulting from cooling reactor effluent vapor in M-102 are separated in the Warm High Pressure Separator (Q-103). Operating temperature of Q-103 is set high enough to prevent precipitation of ammonium chloride salts. The liquid leaving Q-103 is a net product from the battery limits defined.

Vapor from the Warm High Pressure Separator (Q-103) is water-washed to dissolve any ammonium sulfide, ammonium chloride and bicarbonate salts which might form as the reactor vapor is further cooled. The vapor-water mixture is then air-cooled in the Warm High Pressure Vapor Cooler (M-103). The mixture leaving M-103 is separated into three phases, vapor, hydrocarbon liquid and water in the Cold High Pressure Separator (Q-104). Vapor from Q-104 is fed to the Recycle Hydrogen Compressors (R-101). A purge stream is taken upstream of the Recycle Hydrogen Compressor to prevent build-up of methane, and other non-condensables in the recycle hydrogen stream. The quantity of the purge gas controls the hydrogen purity of the recycle gas. A knockout drum (Q-105) is provided upstream of R-101.

The remaining recycle gas stream from R-101 is combined with the make-up hydrogen stream, and sent back to the reactor after being preheated as previously described.

Separation of hydrocarbon liquid from sour water takes place in the Cold High Pressure Separator Q-103. The three phase mixture entering Q-104 is separated in the settling compartment of the drum into a water phase, a light oil phase which floats on top of the water, and a vapor phase which exists above the liquid phase. The oil phase overflows a vertical baffle and is accumulated in the oil compartment of the drum. Water is removed by means of a boot in the settling compartment. The sour water is withdrawn under interface level control.

Figure 1

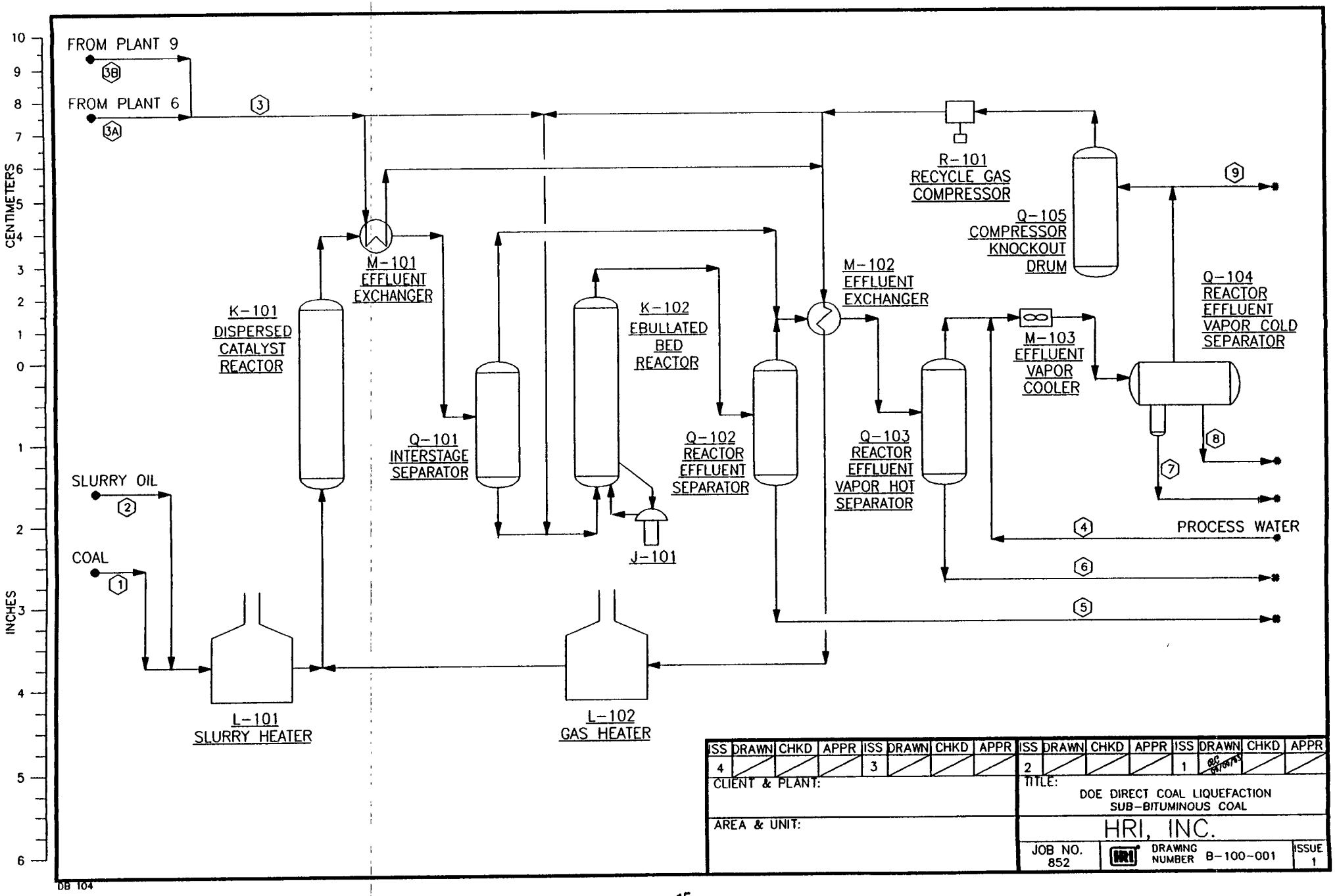
FROM PLANT 9
3B
FROM PLANT 6
3A
3
SLURRY OIL
2
COAL
1
M-101
EFFLUENT
EXCHANGER
K-101
DISPERSED
CATALYST
REACTOR
Q-101
INTERSTAGE
SEPARATOR
K-102
EBULLATED
BED
REACTOR
J-101
Q-102
REACTOR
EFFLUENT
SEPARATOR
M-102
EFFLUENT
EXCHANGER
Q-103
REACTOR
EFFLUENT
VAPOR HOT
SEPARATOR
R-101
RECYCLE GAS
COMPRESSOR
Q-105
COMPRESSOR
KNOCKOUT
DRUM
M-103
EFFLUENT
VAPOR
COOLER
Q-104
REACTOR
EFFLUENT
VAPOR COLD
SEPARATOR
9
8
7
4
PROCESS WATER
6
5
L-101
SLURRY HEATER
L-102
GAS HEATER
CENTIMETERS
INCHES
DB 104
ISS DRAWN CHKD APPR ISS DRAWN CHKD APPR
4 3
CLIENT & PLANT:
AREA & UNIT:
ISS DRAWN CHKD APPR ISS DRAWN CHKD APPR
2 1
TITLE:
DOE DIRECT COAL LIQUEFACTION
SUB-BITUMINOUS COAL
HRI, INC.
JOB NO.
852
DRAWING
NUMBER
B-100-001
ISSUE
1

TABLE 2

OVERALL MATERIAL BALANCE
FLOW RATES IN LBS/HR

Stream No.	*Description*	*Total*	*Per Train*
1	Coal, Wet	1,524,572	381,143
2	Slurry Oil	3,534,996	883,749
3	Make-up Hydrogen	153,624	38,406
4	Water	85,000	21,250
Total In		5,298,192	1,324,548
5	Q-102 Liquid	4,010,720	1,002,680
6	Q-103 Liquid	442,588	110,647
7	Q-104 Liquid	336,184	84,046
8	Sour Water	321,680	80,420
9	Purge Gas	187,020	46,755
Total Out		5,298,192	1,324,548

NOTE: Additive rates not included in material balance.

TABLE 3
BATTERY LIMITS STREAMS

Stream	1	2	3	3A	3B	4	5	6	7	8	9
Description	Coal	Slurry Oil	Total Gas	Recycle	Make-Up	Water	Q-102 Liq.	Q-103 Liq.	Q-104 Liq.	Sour Water	Purge
Flow, lb/hr											
H_2	0	0	29,058	8,758	20,300	0	1,198	232	174	1	7,153
N_2	0	0	132	132	0	0	16	3	3	0	110
CO	0	0	0	0	0	0	735	171	195	0	5,549
H_2S	0	0	0	0	0	0	128	38	164	32	373
NH_3	0	0	0	0	0	0	353	114	695	496	932
H_2O	7,623	0	254	254	0	21,250	3,139	1,224	101	79,791	172
CO_2	0	0	0	0	0	0	2,323	624	1,653	96	10,774
C_1	0	0	4,880	3,248	1,632	0	2,306	519	899	3	10,533
C_2	0	0	1,836	1,836	0	0	1,594	414	1,486	1	4,921
C_3	0	0	1,450	1,450	0	0	1,625	469	2,615	0	3,706
C_4	0	0	546	546	0	0	791	262	2,122	0	1,291
IBP-350	0	0	250	250	0	0	7,751	2,656	23,289	0	1,204
350-450	0	1,988	0	0	0	0	8,349	4,056	15,416	0	32
450-650	0	21,541	0	0	0	0	49,328	24,112	25,726	0	5
650-850	0	189,568	0	0	0	0	191,258	58,720	9,065	0	0
850-1000	0	118,311	0	0	0	0	103,859	16,564	443	0	0
1000+	0	365,871	0	0	0	0	392,387	469	0	0	0
Subtotal	7,623	697,279	38,406	16,474	21,932	21,250	767,140	110,647	84,046	80,420	46,755
Solids	373,520	186,470	-	-	-	-	235,540	-	-	-	-
Total	381,143	883,749	38,406	16,474	21,932	21,250	1,002,680	110,647	84,046	80,420	46,755
Temperature, °F	400	400	100	130	110	-	810	550	130	130	130
Pressure, psia	3115	3115	3250	-	-	-	3015	2985	2970	2970	2970
Mol wt.	-	480.4	2.577	-	-	-	304.3	165.2	94.7	18.0	9.326
Lbs/ft^3 @ cond.	-	42.0	1.236	-	-	-	37.2	38.3	42.8	61.2	4.100

NOTE: Additive rates not included in material balance.

TABLE 4

EQUIPMENT LIST - PUMPS

ITEM NO.	SERVICE	NO. REQUIRED	NO. COMMENTS
J-101 to J-401	Ebullating Pump	4	Estimated Cost/Pump = $950,000

TABLE 4 (Continued)

EQUIPMENT LIST - REACTORS

ITEM NO.	SERVICE	DIAMETER, FT.	LENGTH, FT	THICK, INCHES	WEIGHT, ST.	NO.	COMMENTS
K-101 to K-401	Dispersed Catalyst	14'0"	56'0"	11.8	773	4	2 $^1/_4$ Cr-1 Mo(1)(4)
K-102 to K-402	Ebullated Bed	14'0"	56'0"	11.8	905	4	2 $^1/_4$ Cr-1 Mo(1)(2)(3)

NOTES:

(1) 347SS Overlay

(2) Refractory lined (6")

(3) Design shell temperature, °F = 600
Design pressure, psig = 3,300

(4) Design shell temperature, °F = 850
Design pressure, psig = 3,300

TABLE 4 (Continued)

EQUIPMENT LIST - HEATERS

		HEAT ABSORBED, MMBTU/HR PER HEATER				
ITEM NO.	SERVICE	NORMAL	DESIGN	NO.	MATERIAL OF CONSTRUCTION	DESIGN PRESSURE psig
L-101 to L-401	Slurry Heater	156.6	181.3	4	347 SS Tubes	3,300
L-102 to L-402	Gas Heater	65.7	72.5	4	347 SS Tubes	3,300

TABLE 4 (Continued)

EQUIPMENT LIST - EXCHANGERS

			PER EXCHANGER		DESIGN CONDITIONS		MATERIALS OF CONSTRUCTION		
ITEM NO.	SERVICE	NO. REQUIRED	DUTY MMBTU/HR	SURFACE FT^2	TEMP.,°F	PRESS., psig	TUBES	SHELL	TOTAL EST. BHP
M-101 to M-401	K-101 Effluent Exchanger	4	25.4	850	875	(1)	321 SS	2 1/4 Cr-1 Mo	-
M-102 to M-402	Effluent Exchanger	4	134.7	9,810	850	(1)	321 SS	2 1/4 Cr-1 Mo	-
M-103 to M-403	Q-102 Effluent Vapor Cooler	4	221.9	19,760	550	3,300	316 LSS	316 LSS(3)	3,550

NOTES:

(1) 3300 psig for tubes, 3250 psig for shell

(2) Bare tube surface

(3) Header box

TABLE 4 (Continued)

EQUIPMENT LIST - DRUMS

			POSITION			DESIGN CONDITIONS		
ITEM NO.	NO.REQ'D	SERVICE	(H=Horizontal V=Vertical)	DIAM. FT	LENGTH FT	TEMP.,°F	PRESSURE, PSIG	MATERIALS OF CONSTRUCTION
Q-101 to Q-401	4	Interstage Flash Drum	V	10'6"	21'0"	600(1)	3300	SA387-GR22 CL2(2)
Q-102 to Q-402	4	Reactor Effluent Drum	V	10'6"	28'6"	600(1)	3300	SA387-GR22 CL2(2)
Q-103 to Q-403	4	Reactor Effluent Vapor Hot Separator	V	9'6"	19'0"	750	3300	SA387-GR22 CL2(2)
Q-104 to Q-404	4	Reactor Effluent Vapor Cold Separator	H	7'6"	22'6"	450	3300	SA387-GR11 CL2(2)
Q-105 to Q-405	4	Compressor Knockout Drum	V	8'6"	17'0"	450	3300	Carbon Steel

NOTES:

(1) Refractory lined. Design temperature for shell and heads.

(2) 347SS Clad.

(3) 321SS Clad.

TABLE 4 (Continued)
EQUIPMENT LIST - COMPRESSORS

Item	R-101 to R-401
Number Required	4
Flow, MMSCFD per Compressor	
Normal	259
Design	284
Pressures, psig	
Inlet	2,955
Exit	3,235
Temperature, °F	
Inlet	130
Exit	150
Gas Properties	
Mol. Wt.	9.326
Cp/Cv	1.323
Estimated BHP, per compressor	
Normal	1,730
Design	1,900

TABLE 4 (Continued)

EQUIPMENT LIST - SPECIAL

ITEM NO.	*SERVICE*	*NO. REQUIRED*	*COMMENTS*
S-101 to S-401	Solids Withdrawal System	4	Est. Total Cost = $70,000
S-102 to S-402	Catalyst Handling System	4	Estimated Cost/System = $1,830,000

TABLE 5

UTILITY, CATALYST AND CHEMICAL REQUIREMENTS

UTILITIES (NORMAL)	
Fuel Fired, MMBTU/Hr	1,112
Power, Kwh/Hr	9,350
CATALYST, LBS[1]	
Initial	733,500
Daily Addition (total)	53,790

NOTE: (1) Criterion 324.

8. PLANT 3

8. Plant 3 (Gas Plant)

8.1 Design Basis, Criteria and Considerations

The Gas Plant consists of the following sections:

- Absorber/deethanizer
- Lean oil stripper/debutanizer
- Depropanizer
- LPG Merox for propane and butane products
- Makeup lean oil stripper

The Gas Plant will be designed as a one-train unit.

Feed to the Gas plant will be tail gas from the Hydrogen Purification Plant (plant 6). Makeup lean oil is the naphtha product from plant 2. Lean oil purge from the lean oil stripper/debutanizer will be sent to the Naphtha Hydrotreater (plant 4). Lean oil stripper offgas is returned to plant 6 for treating.

The products from the Gas Plant include:

- C_3 LPG
- C_4 LPG
- Fuel Gas

The specifications for the two LPG products are as follows:

Specification	C_3 LPG Max.	C_4 LPG Max.
Ethane (vol.%)	2.0	--
Propane (vol.%)	--	2.0
Butane (vol.%)	2.0	--
Pentane (vol.%)	--	2.5
Mercaptans (wt.ppm)	20	20

Design Considerations

Lean oil absorption was selected as the method to recover light hydrocarbons from the miscellaneous gas streams being sent to the fuel gas system because of the high recovery of propane and butanes, smaller equipment sizes, and recovery without the need for a refrigeration system. The lean oil absorber and rich oil deethanizer operations were combined into a single tower to reduce capital and operating costs.

Naphtha product from the Coal Liquefaction Plant is used as the lean oil makeup. Because the makeup rate is close to the plant 2 production rate, the total naphtha stream is sent to the Gas Plant. The lean oil purge (Stripper/Debutanizer bottoms) is the feed to the Naphtha Hydrotreater. This scheme simplifies the operation of the system and reduces the amount of light components in the feed to plant 4. The makeup lean oil is stripped prior to entering the absorption system to remove ammonia and acid gases to avoid contamination of LPG products or fuel gas and light hydrocarbons.

Some pentanes are lost to fuel gas in the absorber overhead vapor stream due to vapor-liquid equilibrium. A refrigerated cooler would be required to recover this lost material; however, little additional propane recovery would be made since the recovery rate is already quite good.

Plant 3 was modeled using the PROCESS simulation software. Equipment was sized based on these simulations.

8.2 Process Description

As pointed out earlier, the plant consists of five sections. These are: Absorber/Deethanizer, Lean Oil Stripper/Butanizer, Depropanizer, Makeup Lean Oil Stripper and LPG Merox for propane and butane products. The first four sections of this plant are shown in Process Flow Diagram, Figure 8.1 and the Merox section is shown in Process Flow Diagram, Figure 8.2. Each of these sections is described below.

Absorber/Deethanizer

Compressed tail gas from the pressure swing absorption (PSA) unit of the Hydrogen Purification Plant (plant 6) is fed to a combined lean oil absorber/deethanizer tower to recover the propane and heavier liquids in the stream. The tower is operated at 160 psig. The tower has a reboiler to strip the ethane and lighter components from the rich oil exiting the bottom of the tower. The overhead gas is mixed with the recirculated lean oil and the makeup lean oil and sent to a water cooler before entering the precontactor drum. The vapor product is sent directly to the fuel gas system. The liquid from the precontactor is fed to the top tray of the absorber/deethanizer tower. The precontacting operation improves the recovery of propane from fuel gas and reduces the losses of

pentanes in the lean oil to fuel gas by operating the vapor/liquid separation at a lower temperature than available at the top tray of the tower.

Lean Oil Stripper

The lean oil is the naphtha product from plant 2. The plant 2 naphtha contains hydrogen sulfide and ammonia which would contaminate the fuel gas, propane, and mixed butane products. Prior to being sent to the absorber/deethanizer as makeup lean oil, the naphtha is stripped of the contaminants in a stripper tower, which operates as a debutanizer. The stripped gases are sent to the low pressure gas compressor in plant 6 for scrubbing, and recovery of hydrogen and light gases.

Stripper/Debutanizer

Rich oil from the absorber/deethanizer tower is sent to the rich oil stripper tower to remove propane and butanes from the lean oil. The lean oil from the stripper tower is returned to the absorber/deethanizer via heat exchange with the rich oil feed. Some of the recirculated lean oil is purged to the Naphtha Hydrotreater (plant 4) to remove pentane and heavier hydrocarbons recovered from the feed gases and maintain a more consistent lean oil composition.

Depropanizer

The overhead product from the stripper is fed to a depropanizer tower to separate the light hydrocarbons into two LPG products (propane and mixed butanes). The two products are sent to individual Merox units for the removal of trace sulfur compounds prior to being sent to product storage.

Merox Treating

The Merox units remove mercaptan sulfur compounds from the LPG products (propane and mixed butanes) by dissolving the compounds in a 20° Baume caustic soda solution. This is accomplished in a multistage, vertical Merox extraction. A caustic prewash of 10° Baume solution is required to remove any remaining hydrogen sulfide from the feed stream before entering the extraction tower. The mercaptan-rich caustic solution from the bottom of the extraction towers of the two Merox units flow to the common regeneration section through a small steam heater. The caustic stream is regenerated with air in the presence of a catalyst, where the mercaptans are converted to disulfides. The caustic stream is returned to the Merox units, and the disulfide stream is sent to the Naphtha Hydrotreater feed for disposal.

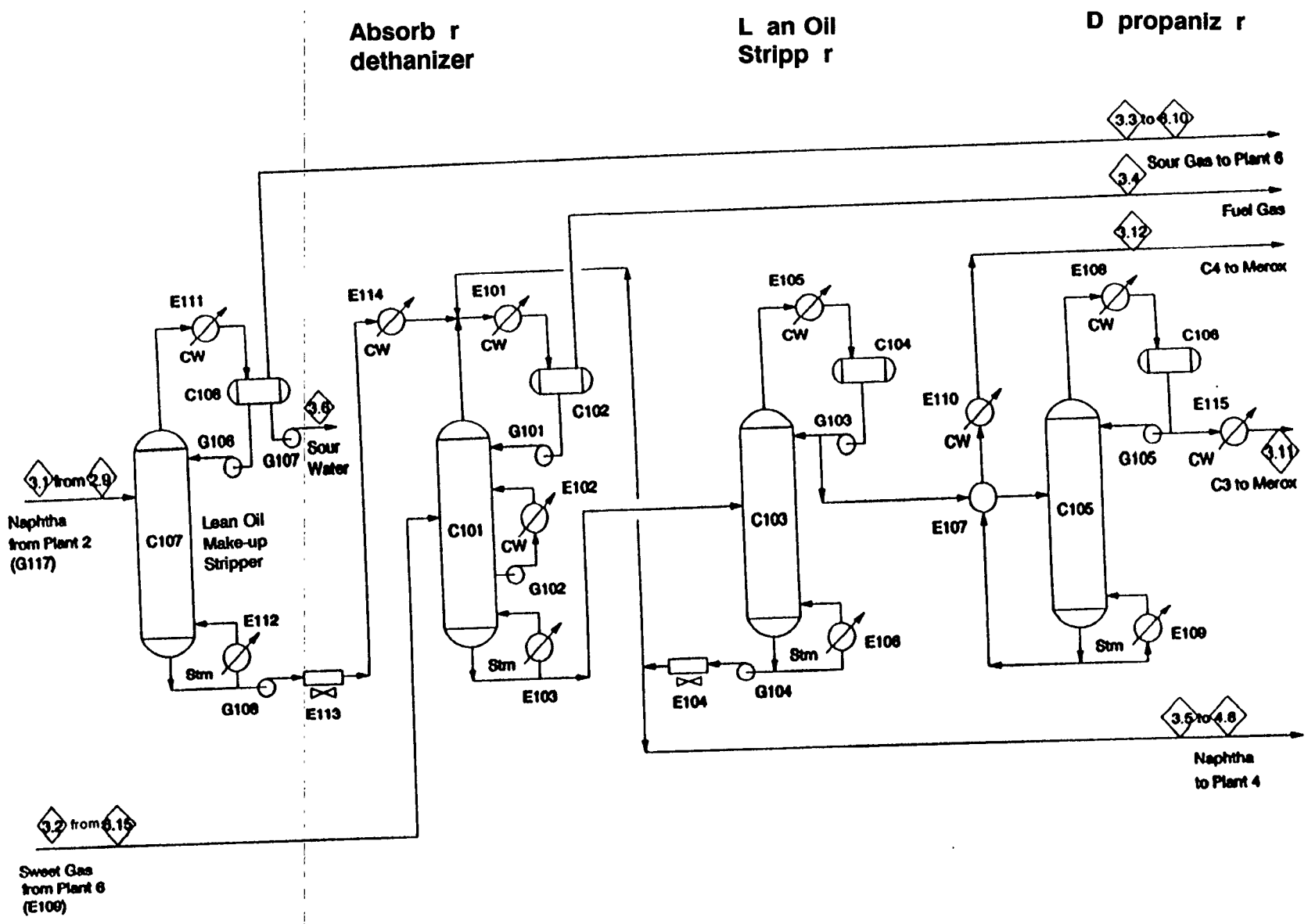

Figur 8.1 Plant 3 Gas Plant Pr cess Fl w Diagram

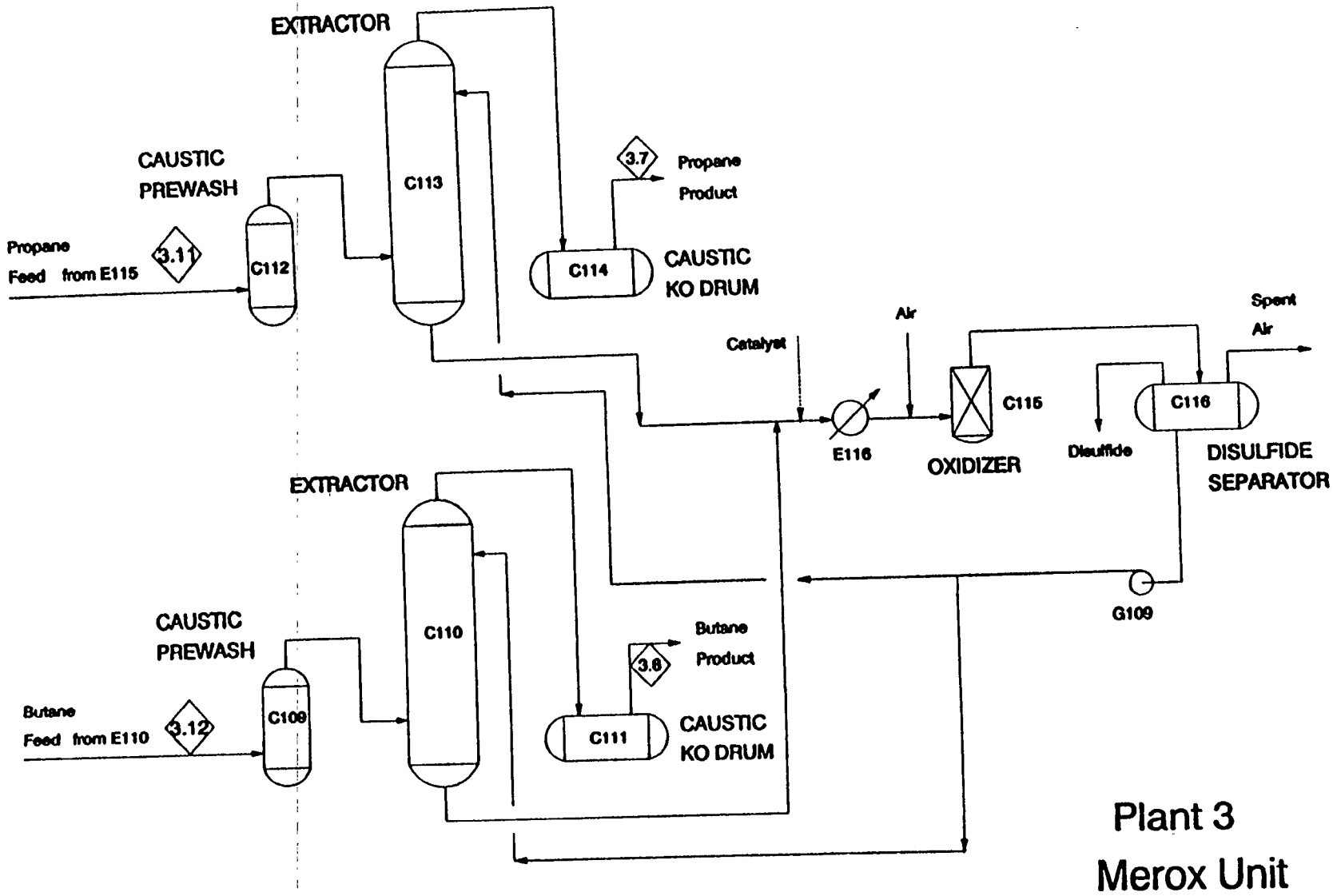

Figure 8.2 Process Flow Diagram

8.3 Material Balance

The material balance for this plant is shown in table 8.1 on the next page. It is a single train plant.

TABLE 8.1

MATERIAL BALANCE

PLANT 3

PLANT 3 : INPUT

Stream No.	3.1	3.2					
Components (Lb/Hr)	PL-2 Naphtha	PL-6 TailGas					Total Input
H2O	44	1,176					1,220
H2S	16	1					17
NH3	24						24
CO							0
CO2	88						88
H2		2,746					2,746
N2		13,797					13,797
C1	8	39,719					39,727
C2	568	29,027					29,595
C3	904	30,641					31,545
C4	1,816	18,894					20,710
C5-350	100,904	37,145					138,049
350-450	1,760	19					1,779
450-650	28	3					31
650-850							
850-1000							
1000+							
MEA		20					20
Coal (MAF)							
Ash							
Total	106,160	173,188					279,348
Temp,F	130	100					-----
Pres,Psig	50	220					-----

PLANT 3 : OUTPUT

Stream No.	3.3	3.4	3.11	3.12	3.5	3.6	
Components (Lb/Hr)	LP Gas to PL-6	High BTU Fuel Gas	C3 Prod	C4 Prod	Naphtha to PL-4	Sour Water	Total Output
H2O	42	290	5			883	1,220
H2S	17						17
NH3	24						24
CO							0
CO2	88						88
H2		2,746					2,746
N2		13,797					13,797
C1	9	39,718					39,727
C2	568	28,517	510				29,595
C3	903	30	30,332	280			31,545
C4	1,784	62	561	18,180	123		20,710
C5-350	1,879			355	135,815		138,049
350-450					1,779		1,779
450-650					31		31
650-850							
850-1000							
1000+							
MEA		20					20
Coal(uncon)							
Ash							
Total	5,314	85,180	31,408	18,815	137,748	883	279,348
Temp,F	130	100	120	100	130	130	-----
Pres,Psig	45	200	265	265	220	40	-----

8.4 Utility Summary

The utility summary for the gas plant (Plant 3) is included in Table 8.2.

Table 8.2

Utility Summary

Steam, lb/hr	
600 psig	214,660
50 psig	17,200
Electricity, kw	1,080
Cooling Water, gpm	7,857
Fuel Gas Production, MMBTU/hr	1,567

8.5 Water Summary

Sour Water = 2 gpm

8.6 Catalyst and Chemical Summary

Catalyst and chemicals requied for Plant 3 are shown below:

Chemical	Caustic, (NaOH)
Quantity required for start up	4,800 Gallons (10% wt)
Consumption	10 lbs/day
Catalyst	1 lbs/day

8.7 Operating and Manpower Requirements

The operating manpower requirement for this plant is 4 operators. For full manpower requirements of this plant as well as the complex, refer to Section 29 of this report.

8.8 Major Equipment Summary

The overall major equipment for the gas plant is shown in Table 8.3.

Tabl 8.3 Major Equipment Summary

MAJOR EQUIPMENT SUMMARY
LOW RANK COAL

Plant 3 - Gas Plant

Reactors and Vessels

Equipment No.	Equipment Description	Length (T-T in ft.)	Diameter (ID in ft.)	Material	Design Conditions Pres (psig)	Design Conditions Temp (°F)	Orientation	Comments
3.1- C102	Abs/Deeth Ovhd Precontactor	47.0	14.0	A-516	250	150	Horizontal	
3.2- C104	Lean Oil Stripper Ovhd Accum	35.0	11.0	A-516	200	150	Horizontal	
3.3- C106	Depropanizer Ovhd Accum	25.0	8.0	A-516	350	150	Horizontal	
3.1- C108	LO Makeup Strp Ovhd Accum	40.0	13.0	A-516	100	150	Horizontal	Boot: 1.5'D x 4.5'

Towers

Equipment No.	Equipment Description	Height (T-T in ft.)	Diameter (ID in ft.)	Material	Design Conditions Pres (psig)	Design Conditions Temp (°F)	No. of Trays	Type of Trays
3.1- C101	Absorber/Deethanizer	120	12.0	A-516	250	400	48	Valve
3.2- C103	Lean Oil Stripper	110	12.0	A-516	200	500	44	Valve
3.3- C105	Depropanizer	120	8.0	A-516	350	250	48	Valve
3.1- C107	Lean Oil Makeup Stripper	35	5.0	A-516	100	400	12	Valve

Note: The equipment shown is for a single train design.

Sheet 1

Table 8.3 Major Equipment Summary - continued

Heat Exchangers

Equipment No.	Equipment Description	Duty (MM Btu/hr)	Type of Exchanger	No. Shells/ Area/Shell (sq ft)	Design Conditions Tube P/T (psig/°F)	Design Conditions Shell P/T (psig/°F)	Material of Construction Tube	Material of Construction Shell	Air-Fi BHP
3.1- E101	Absorb/Deeth Ovhd Cooler	15.0	Shell & Tube	1/ 10,250	100 / 150	250 / 150	CS	CS	
3.1- E102	Absorb/Deeth Intercooler	3.4	Shell & Tube	1/ 3020	100 / 150	250 / 150	CS	CS	
3.1- E103	Absorb/Deeth Reboiler	120.0	Kettle	1/ 10,120	700 / 550	250 / 400	CS	CS	
3.2- E104	Lean Oil Cooler	126.0	Air-Fin	1/ 17,360	200 / 500	10 / 250	CS	--	630
3.2- E105	Lean Oil Str Ovhd Condenser	67.0	Shell & Tube	1/ 23,560	100 / 150	200 / 150	CS	CS	
3.2- E106	Lean Oil Str Reboiler	92.5	Kettle	1/ 16,830	700 / 550	200 / 500	CS	CS	
3.3- E107	Depropanizer Feed/Btms Exch	1.7	Shell & Tube	1/ 420	350 / 250	350 / 200	CS	CS	
3.3- E108	Depropanizer Ovhd Condenser	15.8	Shell & Tube	1/ 6520	100 / 150	350 / 150	CS	CS	
3.3- E109	Depropanizer Reboiler	17.2	Kettle	1/ 2560	100 / 350	350 / 250	CS	CS	
3.3- E110	Depropanizer Btms Cooler	1.2	Shell & Tube	1/ 470	100 / 150	350 / 200	CS	CS	
3.1- E111	LO Makeup Strp Ovhd Cond	2.7	Air-Fin	1/ 930	100 / 250	10 / 250	CS	--	14
3.1- E112	LO Makeup Strp Reboiler	8.6	Kettle	1/ 900	700 / 550	100 / 400	CS	CS	
3.1- E113	LO Makeup Strp 1st Btms Clr	5.0	Shell & Tube	1/ 2060	300 / 400	10 / 250	CS	CS	
3.1- E114	LO Makeup Strp 2nd Btms Clr	6.6	Shell & Tube	1/ 4260	100 / 150	250 / 150	CS	CS	
3.3- E115	Depropanizer Ovhd Cooler	1.0	Shell & Tube	1/ 550	100 / 150	350 / 150	CS	CS	

Pumps

Equipment No.	Equipment Description	Flow Rate (gpm)	Delta Pres (psi)	Brake Horsepower	Design Conditions Pres (psig)	Design Conditions Temp (°F)	Driver	# Required	Mat'l
3.1- G101	Absorb/Deeth Precontact Liq	2680	50	110	300	150	Elect Motor	2	CS/CI
3.1- G102	Intercooler Pumparound	3900	50	150	300	150	Elect Motor	2	CS/CI
3.1- G103	Lean Oil Strp Reflux	1880	170	250	400	150	Elect Motor	2	CS
3.2- G104	Lean Oil Circulation	1520	65	80	250	150	Elect Motor	2	CS/CI
3.3- G105	Depropanizer Reflux	450	50	20	400	150	Elect Motor	2	CS
3.1- G106	LO Makeup Strp Reflux	45	50	2	150	150	Elect Motor	2	CS
3.1- G107	LO Makeup Strp Sour Water	5	10	1	100	150	Elect Motor	2	CS
3.1- G108	LO Makeup Strp Btms	287	190	45	300	400	Elect Motor	2	CS/CI

Sheet 2

9. PLANT 4

9. Plant 4 (Naphtha Hydrotreater)

9.1 Design Basis, Criteria and Considerations

The Naphtha Hydrotreater will be designed as a one-train unit.

Feed to the Naphtha Hydrotreater is the naphtha (C_5-350°F) product from the atmospheric fractionator tower at the Coal Liquefaction Plant (plant 2) via the Gas Plant (plant 3). An additional stream from the Gas Oil Hydrotreater (plant 5) is sent to the downstream section (Stabilizer) of the Naphtha Hydrotreater (plant 4).

The Naphtha Hydrotreater design is based on the following criteria:

~~Reactor~~ Inlet Pressure, psig	1,000
Reactor Outlet Pressure, psig	950
Hydrogen Partial Pressure, psia (outlet of reactor)	700
Reactor Inlet Temperature, °F	525
Reactor Outlet Temperature, °F	575
Chemical Hydrogen Consumption, SCF/B	125
LHSV, V/V/hr	2.0
Catalyst Type	NiMo

The Naphtha Hydrotreater product characteristics are given in Table 9.1 below:

Table 9.1

Naphtha Hydrotreater Product Characteristics

	C_5-350°F
Gravity, °API	53.3
Distillation, TBP °F	
IBP	72
5% (wt.)	110
10%	138
30%	207
50%	246
70%	284
90%	328
95%	340
EP	344
Sulfur, wppm (maximum)	1.0*
Nitrogen, wppm (maximum)	0.2*

*Note: When the nitrogen specification is achieved at 0.2 wppm. The sulfur level will go down further (0.1 wppm).

Design Considerations

Because the Naphtha Hydrotreater is a vapor phase reaction, only cold separators (both high pressure and low pressure) are included in the design of the plant.

The naphtha stream from the Gas Oil Hydrotreater is sent directly to the Plant 4 fractionator because it already has been treated at more severe conditions than those in the Naphtha Hydrotreater.

The fractionator was designed to use 600 psig steam for the reboiler because the bottoms temperature is 450°F. The design consideration also reduces capital costs.

9.2 Process Description

The Plant includes two distinct sections. These are: 1) Reaction and Primary Separation section and 2) Product Distillation section. Figure 9.1 is the Process Flow Diagram of the Plant.

Reaction and Primary Separation Section. Feed is pumped from intermediate tankage directly to heat exchange with the reactor effluent (E101). Hydrogen is then mixed with the heated feed prior to entering the reactor feed preheater (F101), where the mixture is raised to the reactor inlet temperature. The feed/hydrogen mixture enters the fixed bed reactors (C101 and C102), which operate at a pressure of 1000 psig. The reactor effluent passes through heat exchange with the cold feed (E101), through an air-fin cooler (E102), and to the high pressure separator (C103). Wash water is injected into the reactor effluent line prior to the air-fin cooler for control of ammonium salts. Hydrogen rich vapor is compressed in K101 and returned to the front end of the unit to mix with makeup hydrogen and the unit feed. A purge gas stream is sent to Plant 6 to remove light hydrocarbons from the system. Sour water is removed from the high pressure separator to be eventually sent for ammonia recovery. The hydrocarbon liquid is flashed to 185 psig in the low pressure separator (C105) to remove light hydrocarbons, which are sent to Plant 6. The low pressure separator liquid is then sent to product distillation.

Product Distillation. The low pressure separator liquid is preheated with the product from the fractionator in exchanger E105 before entering the tower (C106). The overhead vapor from the tower is partially condensed and only a vapor product is withdrawn for further processing at Plant 6. The fractionator has a steam-heated reboiler (E104). The bottoms naphtha product is cooled in exchangers (E105 and E106) and sent to product storage.

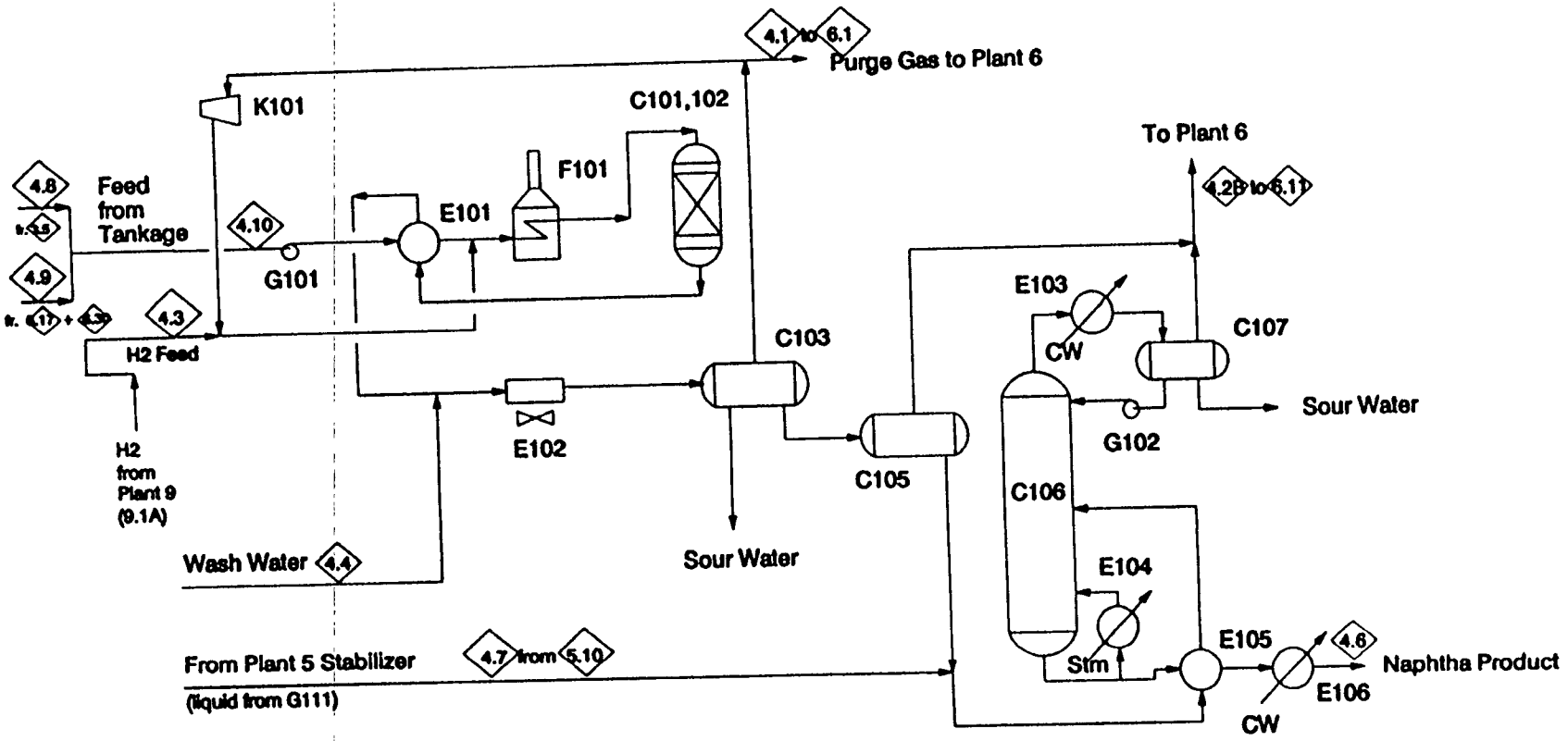

Plant 4
Naphtha Hydrotreater

Notes: (1) Combined sour water rate is represented by 4.5

Figure 9.1 Process Flow Diagram

9.3 Material Balanc

Material balance for Plant 4 is shown in Table 9.2. It is a single train plant.

Table 9.2
Material Balance
PLANT 4 : INPUT

Stream No.	4.8	4.9	4.7	4.3	4.4		
Components (Lb/Hr)	PL-3 Naphtha	PL-6 KO Liq	PL-5 Naphtha	PL-9 H2	Wash Water	Reactor Delta	Total Input
H2O		268	5		8,200	4,913	8,473
H2S			1			136	1
NH3			8			347	8
CO							
CO2							
H2				1,204		(276)	1,204
N2				169			169
C1						600	0
C2		8	11			398	19
C3		50	91			346	141
C4	123	73	246			1,394	442
C5-350	135,815	2,331	11,470			(25,458)	149,616
350-450	1,779	276	166			17,535	2,221
450-650	31					62	31
650-850						3	
850-1000							
1000+							
Coal (MAF)							
Ash							
Total	137,748	3,006	11,998	1,373	8,200	0	162,325
Temp,F	130	-----	135	130	120	-----	-----
Pres,Psig	220	-----	-----	-----	950	-----	-----

PLANT 4 : OUTPUT

Stream No.	4.1 +4.2	4.6	4.5				
Components (Lb/Hr)	LP Gas to PL-6	Naphtha Product	Sour Water				Total Output
H2O	50		13,336				13,386
H2S			137				137
NH3			355				355
CO							
CO2							
H2	928						928
N2	169						169
C1	600						600
C2	417						417
C3	487						487
C4	1,656	180					1,836
C5-350	777	123,381					124,158
350-450	3	19,753					19,756
450-650		93					93
650-850		3					3
850-1000							
1000+							
Coal (uncon)							
Ash							
Total	5,087	143,410	13,828				162,325
Temp,F	137	100	---				-----
Pres,Psig	920	155	---				-----

9.4 Utility Summary

The utility summary for this plant is included in Table 9.3.

Table 9.3

Utility Summary
Plant 4

Steam, lbs/hr 6000 psig	38,000
Electricity	757
Cooling Water, gpm	2,214
Fuel gas, MMSCFD	0.4

Note: Fuel gas consumption is based on a heating value of 1000 Btu/SCF.

9.5 Water Summary

Table 9.4 below presents the water balance for the Naphtha Hydrotreater.

Table 9.4

Water Summary
Plant 4

Water Inlet	lb/hr
Feed	273
Produced in Reactors	4,913
Wash Water	8,200
TOTAL	13,386
Water Outlet	
Sour Water to NH_3 Recovery	13,336
Hydrogen Purge	24
Low Pressure Gases to Plant 6	26
Products	0
TOTAL	13,386
Sour Water to NH_3 Recovery, gpm	38

9.6 Catalyst and Chemical Summary

Catalyst and chemicals requirements for this plant are shown below:

Quantity required for start up	46,000 lb
Estimated catalyst life	3 years

9.7 Operating Manpower Requirements

The operating manpower requirement for this plant is 4 operators. For full manpower requirements of this plant as well as the entire complex, refer to Section 29 of this report.

9.8 Major Equipment Summary

The major equipment for the naphtha hydrotreater (Plant 4) is summarized in Table 9.5. This is a single train plant.

Tabl 9.5

MAJOR EQUIPMENT SUMMARY
LOW RANK COAL

Plant 4 - Naphtha Hydrotreater

Reactors and Vessels

Equipment No.	Equipment Description	Length (T-T in ft.)	Diameter (ID in ft.)	Material	Design Conditions Pres (psig)	Design Conditions Temp (°F)	Orientation	Comments
4.1- C101	Hydrotreater Reactor	27.5	6.0	A-516	1100	650	Vertical	
4.1- C102	Hydrotreater Reactor	27.5	6.0	A-516	1100	650	Vertical	
4.1- C103	High Pressure Separator	20.0	7.0	A-516	1000	150	Horizontal	Boot: 3'D X 4'
4.1- C104	Compressor Knockout Drum	5.0	3.0	A-516	1000	150	Vertical	
4.1- C105	Low Pressure Separator	16.0	5.5	A-285	250	150	Horizontal	
4.2- C107	Fractionator Ovhd Accum	16.0	5.5	A-285	200	150	Horizontal	Boot: 2'6"D X 4'
4.1- C108	Wash Water Drum	12.0	3.0		10	150	Horizontal	
4.1- C109	Sour Water Drum	7.0	3.0		50	150	Horizontal	

Towers

Equipment No.	Equipment Description	Height (T-T in ft.)	Diameter (ID in ft.)	Material	Design Conditions Pres (psig)	Design Conditions Temp (°F)	No. of Trays	Type of Trays
4.1- C106	Fractionator	50	8'	A-285	200	450	20	Valve

Note: The equipment shown is for a single train.

Sheet 1

Table 9.5

PLANT 4 MAJOR EQUIPMENT SUMMARY - continued

Fired Heaters

Equipment No.	Equipment Description	Absorbed Duty (MM Btu/hr)	Fired Duty (MM Btu/hr)	Type of Heater	Tube Material	Design Conditions Pres (psig)	Design Conditions Temp (°F)
4.1- F101	Reactor Feed Preheater	12.4	15.5			1150	550

Heat Exchangers

Equipment No.	Equipment Description	Duty (MM Btu/hr)	Type of Exchanger	No. Shells/ Area/Shell (sq ft)	Design Conditions Tube P/T (psig/°F)	Design Conditions Shell P/T (psig/°F)	Material of Construction Tube	Material of Construction Shell	Air-Fi BHP
4.1- E101	Reactor Feed/Effluent Ex	13.5	Shell & Tube	1/ 1120	1050 / 600	1150 / 350	CS	CS	
4.1- E102	Reactor Effluent Cooler	33.8	Air-Fin	1/ 5150	1050 / 400	---	CS		270
4.2- E103	Fractionator Condenser	31.0	Shell & Tube	1/ 7140	100 / 150	200 / 200	CS	CS	
4.2- E104	Fractionator Reboiler	37.4	Kettle	1/ 9780	650 / 550	200 / 450	CS	CS	
4.2- E105	Fractionator Feed/Bottoms Ex	11.3	Shell & Tube	1/ 7300	250 / 450	200 / 450	CS	CS	
4.2- E106	Fract Bottoms Prod Cooler	20.2	Air-Fin	1/ 9920	100 / 150	---	CS	--	160

Compressors

Equipment No.	Equipment Description	Flow Rate (M lb/hr)	Flow Rate (MMSCFD)	Brake Horsepower	Design Conditions Pres Inlet (psig)	Design Conditions Pres Outlet (psig)	Design Conditions Temp (°F)	Driver
4.1- K101	Recycle Hydrogen	7.0	14.2	171	915	1100	175	Elect Motor

Sheet 2

Table 9.5

PLANT 4 MAJOR EQUIPMENT SUMMARY - continued

Pumps

Equipment No.	Equipment Description	Flow Rate (gpm)	Delta Pres (psi)	Brake Horsepower	Design Conditions Pres (psig)	Design Conditions Temp (°F)	Driver	# Required
4.1- G101	Reactor Charge Pump	307	1070	255	1150	150	Elect Motor	2
4.2- G102	Fractionator Reflux Pump	750	55	36	250	150	Elect Motor	2
4.1- G103	Sour Water Drum Pump	25	35	1	100	150	Elect Motor	2
4.1- G104	Wash Water Pump	23	950	20	1050	150	Elect Motor	2

10. PLANT 5

10. Plant 5 (Gas Oil Hydrotreater)

10.1 Design Basis Criteria and Considerations

The Gas Oil Hydrotreater is designed as a one-train unit.

Feeds to the Gas Oil Hydrotreater are the distillate sidestream from the atmospheric tower and the overhead liquid and the upper sidestream from the vacuum tower of the Coal Liquefaction (plant 2). The three products (350-450°F, 450-650°F, and 650-850°F) are separated in a fractionator on the back-end of the unit.

Characteristics of the three feeds from Coal Liquefaction are presented in Table 10.1 below:

Table 10.1

Feeds to the Gas Oil Hydrotreater

	Atmospheric Sidestream	Vacuum Upper SS
Feed Rate, BPSD	33,722	17,193
Gravity, °API	19.5	11.0
Product Cuts (wt.%)		
C_5-350°F	0.8	
350-450°F	21.9	0.2
450-650°F	57.1	18.7
650-850°F	20.2	81.0

The Gas Oil Hydrotreater design is based on the following criteria:

Reactor Inlet Pressure, psig	2,600
Reactor Outlet Pressure, psig	2,500
Hydrogen Partial Pressure, psia (outlet of reactor)	1,800
Reactor Inlet Temperature, °F	600
Reactor Outlet Temperature, °F	750
Chemical Hydrogen Consumption, SCF/B	1,200
LHSV, V/V/hr	1.0
Catalyst Type	NiMo

The Gas Oil Hydrotreater product characteristics are given in Table 10.2 below:

Table 10.2

Products from the Gas Oil Hydrotreater

	350-450°F	450-650°F	650-850°F
Gravity, °API	33.8	25.4	22.2
Distillation, TBP °F			
IBP	340	414	640
5% (wt.)	348	463	645
10%	358	469	665
30%	376	531	676
50%	399	576	717
70%	414	619	759
90%	433	645	815
95%	449	655	835
EP	465	665	838
Sulfur, wppm	20	20	20
Nitrogen, wppm	500	500	500

Design Considerations

Three final products (350-450°F, 450-650°F, and 650-850°F) were combined for hydrotreating in the same unit because:

- The reactions conditions recommended are approximately the same for the two heavier products and the amount of the lighter product is relatively small.
- Significant savings in capital cost and operating cost are realized by hydrotreating in a common unit even though the final fractionation is more complex.
- The initial fractionation in the plant 2 (Coal Liquefaction Plant) can be made as rough cuts, and thus, save capital and operating costs.

The reaction system was designed with two parallel reactors. Because of the reaction conditions, the reactors were designed with two catalyst beds and an interbed hydrogen quench.

The separation system was designed with high and low pressure systems, each with hot and cold separators. There was no incentive for a warm separator as in Plant 2. The letdown from the high pressure to the low pressure systems is done through an expander turbine to improve the efficiency of the process. The expander was designed to drive the reactor feed booster pump.

It is very difficult to fractionate all three products on the same tower; therefore, the 450°F-material was taken overhead in the fractionator to a small outboard stabilizer tower to make the front-end cut on the 350-450°F product. There is no problem fractionating the 450-650°F cut as a sidestream product or the 650-850°F as a bottoms product.

10.2 Process Description

This Plant consists of two sections. These are: 1) Reaction and Separation section and 2) Product Distillation section. Figure 10.1, the Process Flow Diagram, schematically depicts the process. The following process description is broken down in two parts according to the above two sections.

Reaction and Separation Section

Cold feed is pumped from intermediate tankage through heat exchange with the sidestream product of the atmospheric tower of the Coal Liquefaction Plant. Hot feed is pumped from intermediate tankage directly to the Gas Oil Hydrotreater and is mixed with

the preheated cold feed. The mixed feed is pumped up to reactor pressure in the reactor charge pump (G101) driven by an hydraulic expander turbine. The mixed feed is sent through heat exchange with the reactor effluent in E101. Recycle and makeup hydrogen are mixed and heated by heat exchange with the reactor effluent (E102) and followed by a fired heater (F101).

The hydrogen is then mixed with the heated feed prior to entering the fixed bed reactors (C101 and C102), at an inlet pressure of 2600 psig. The reactor effluent passes through sequential heat exchange with the cold feed (E101), hydrogen gas (E102), and the hot low pressure separator liquid (E103) before being sent to the hot high pressure separator (C103). The vapor from the hot high pressure separator is cooled in an air-fin exchanger (E104) and is sent to the cold high pressure separator (C104). Wash water is injected into the reactor effluent line prior to the air-fin cooler for control of ammonium salts. Hydrogen rich vapor from the cold high pressure separator is compressed by K101 and returned to the front end of the unit to mix with makeup hydrogen.

A purge hydrogen stream is sent to Plant 6 to remove light hydrocarbons from the system. Sour water is removed from the cold high pressure separator to be eventually sent for ammonia recovery. The hydrocarbon liquid is sent to the cold low pressure separator (C106). The liquid from the hot high pressure separator is sent to a hydraulic expander turbine (Y101) driving the reactor charge pump before going to the hot low pressure separator (C105). The hot low pressure separator liquid passes through heat exchange with the reactor effluent (E103) and is then sent to product distillation. The hot low pressure separator vapor is cooled in an air-fin exchanger (E105) and sent to the cold low pressure separator (C106). The vapor from this separator is sent to Plant 6, and the liquid is sent to product distillation. Sour water is removed from the cold low pressure separator to be eventually sent for ammonia recovery.

Product Distillation

Liquid from the hot low pressure separator is preheated in exchange with the product fractionator bottoms in E111 and charged as the lower feed to the fractionator (C110). Liquid from the cold low pressure separator is the upper feed to the fractionator. The overhead of the tower has three products: an overhead vapor stream which is sent to Plant 6; an unstabilized liquid product; and a water stream which is recycled to the wash water system. The overhead liquid is sent to an outboard stabilizer (C115) for correcting the initial boiling point of the 350-450°F product. The overhead of the stabilizer has a vapor product which is sent to Plant 6 and a liquid product which is sent to the Naphtha Hydrotreater (Plant 4) product distillation section. The stabilized 350-450°F product is sent to final storage. The sidestream off the main fractionator is steam-stripped (C111) to correct the initial boiling point, cooled, and sent to finished product storage (450-650°F). The bottoms product is sent to heat exchange with the lower feed to the fractionator (E111), cooled in E113, and sent to finished product storage (650-850°F).

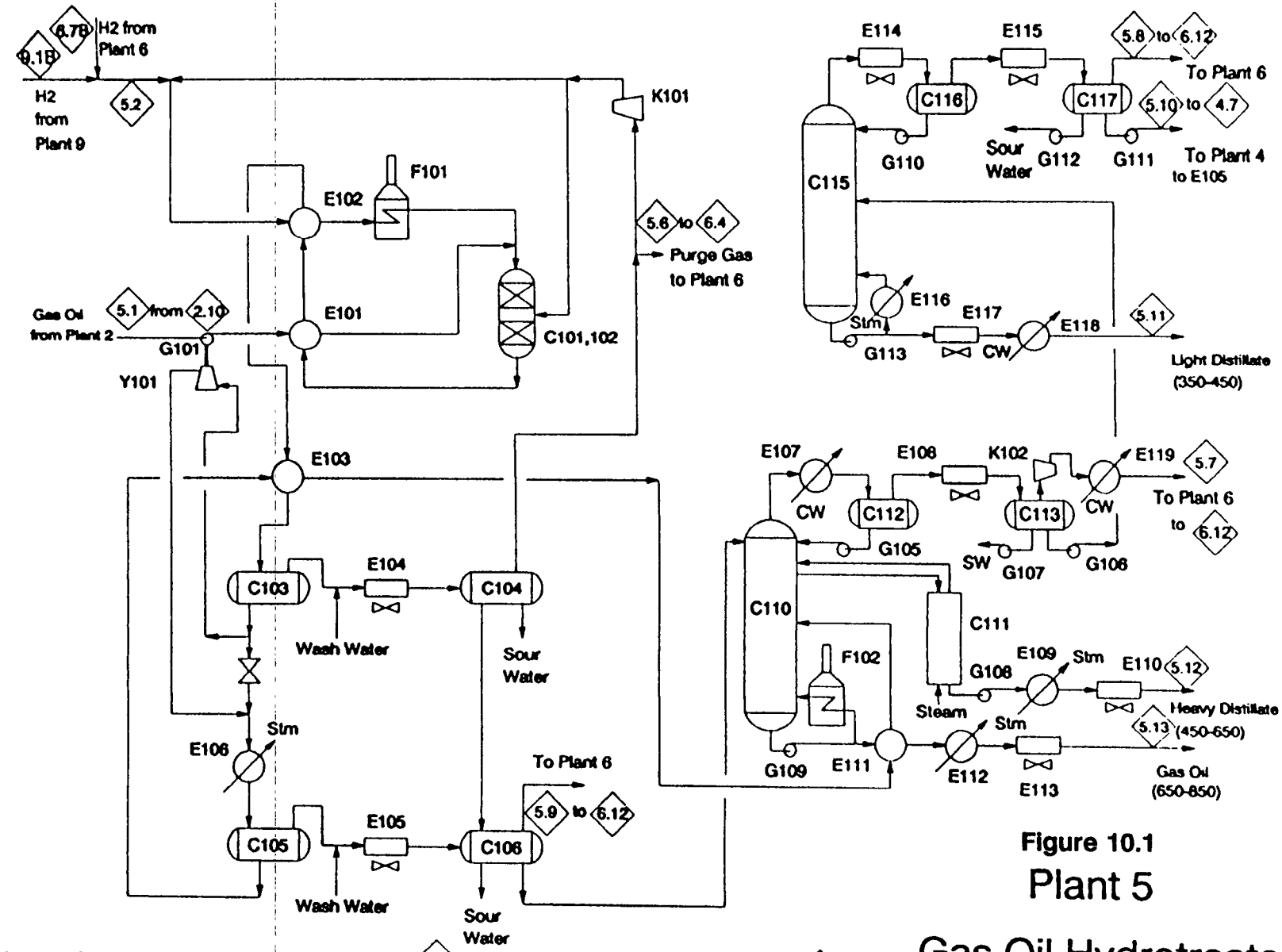

Notes: (1) Combined wash water streams are represented by 5.3.
(2) Combined sour water streams are represented by 5.5.
(3) Combined steam flow rate is represented by 5.4.

Figure 10.1

Plant 5

Gas Oil Hydrotreater

10.3 Material Balance

The material balance for this plant is shown in Table 10.3. It is a single train plant.

Table 10.3

Material Balance - Plant 5

PLANT 5 : INPUT

Stream No.	5.1	5.2A	5.2B	5.4	5.3				
Components (Lb/Hr)	PL-2 Gas Oil	PL-6 H2	PL-9 H2	Steam	Wash Water			Reactor Delta	Total Input
H2O	300			5,000	47,100			17,216	52,400
H2S								185	
NH3								2,850	
CO									
CO2									
H2		410	15,869					(14,029)	16,279
N2			2,228						2,228
C1		42						1,644	42
C2								1,914	
C3								2,282	
C4								1,637	
C5-350	3,464							11,258	3,464
350-450	101,228							(9,857)	101,228
450-650	310,484							123,475	310,484
650-850	290,912							(135,141)	290,912
850-1000	4,100							(3,434)	4,100
1000+									
Coal (MAF)									
Ash									
Total (PPH)	710,488	452	18,097	5,000	47,100			0	781,137
Temp,F	130	100	100	650	120			-----	-----
Press,Psig	100	1,530	2,700	50	2,500			-----	-----

PLANT 5 : OUTPUT

Stream No.	5.6		5.10	5.11	5.12	5.13	5.5		
Components (Lb/Hr)	HP Gas to PL-6	LP Gas to PL-6	Naphtha to PL-4	Light Distill	Heavy Distill	Gas Oil Product	Sour Water	Water Recycle	Total Output
H2O	9	824	5		235		63,433	5,110	69,616
H2S		32	1				152		185
NH3	5	611	8				2,226		2,850
CO									
CO2									
H2	379	1,871							2,250
N2	267	1,961							2,228
C1	203	1,483							1,686
C2	114	1,789	11						1,914
C3	93	2,098	91						2,282
C4	43	1,348	246						1,637
C5-350	58	2,547	11,421	324	372				14,722
350-450	4	108	163	71,769	19,322	5			91,371
450-650				9,577	288,408	135,974			433,959
650-850					7,261	148,510			155,771
850-1000					3	663			666
1000+									
Coal (MAF)									
Ash									
Total (PPH)	1,175	14,672	11,946	81,670	315,601	285,152	65,811	5,110	781,137
Temp,F	169	135	135	100	135	135	168	168	-----
Press,Psig	2,450	10	-----	10	50	40	10	10	-----

10.4 Utility Summary

The utility summary for the gas oil hydrotreater (Plant 5) is summarized in Table 10.4. The fuel gas requirement shown in this table is based on a heating value of 1000 BTU/SCF.

Table 10.4

Utility Summary
Plant 5

Steam, lbs/hr	
50 psig	44,700
150 psig	-113,800
Electricity, KW	2,712
Cooling Water, gpm	114
Fuel Gas, MMSCFD	7.0

10.5 Wat r Summary

The water summary for the gas oil hydrotreater (Plant 5) is shown in Table 10.5. All input and output streams are grouped together and shown separately in the same table.

Table 10.5

Water Summary
Plant 5

Water Inlet	lb/hr
Feed	300
Produced in Reactors	17,216
Wash Water	47,100
Steam	5,000
TOTAL	69,616
Water Outlet	
Sour Water to NH_3 Recovery	63,433
Separator Water for Recycle	5110
High Pressure Gas to Plant 6	9
Low Pressure Gases to Plant 6	824
Products	240
TOTAL	69,616
Sour Water to NH_3 Recovery, gpm	127
Wash Water Summary	
Requirements	47,100
Separator Water Recycled	5,110
Make-up Wash Water	41,990

10.6 Catalyst and Chemical Summary

Catalyst and chemicals required for Plant 5 are shown below:

Catalyst or chemical	Catalyst
Quantity required for start up	458,000 lb.
Consumption or estimated life	3 year life

10.7 Operating Manpower Requirements

The operating manpower requirement for this plant is 4 operators. For full manpower requirements of this plant as well as the complex, refer to Section 17 of this report.

10.8 Major Equipment Summary

The major equipment for the gas oil hydrotreater (plant 5) is summarized in Table 10.6. The equipment sizes are for a single train plant.

Table 10.6

MAJOR EQUIPMENT SUMMARY
LOW RANK COAL

Plant 5 - Gas Oil Hydrotreater

Reactors and Vessels

Equipment No.	Equipment Description	Length (T-T in ft.)	Diameter (ID in ft.)	Material	Design Conditions Pres (psig)	Design Conditions Temp (°F)	Orientation	Comments
5.1- C101	Hydrotreater Reactor	37.0	15.0	A-387	2750	850	Vertical	
5.1- C102	Hydrotreater Reactor	37.0	15.0	A-387	2750	850	Vertical	
5.1- C103	Hot High Pressure Separator	27.0	7.0	A-387	2600	550	Vertical	
5.1- C104	Cold High Pressure Separator	15.0	5.0	A-387	2600	150	Horizontal	
5.1- C105	Hot Low Pressure Separator	36.0	11.0	A-285	150	450	Horizontal	
5.1- C106	Cold Low Pressure Separator	15.0	5.5	A-285	150	150	Horizontal	Boot: 1.5'D X 3'
5.1- C107	Wash Water Drum	15.0	5.5	CS	10	150	Horizontal	
5.1- C108	Sour Water Drum	15.0	5.5	CS	50	150	Horizontal	
5.1- C109	H2 Recycle Comp K.O. Drum	7.0	4.0	A-387	2600	200	Vertical	
5.2- C112	Fractionator Ovhd Accum (Hot)	36.0	12.5	CS	10	400	Horizontal	
5.2- C113	Fractionator Ovhd Accum (Cold)	20.0	6.0	CS	10	150	Horizontal	Boot: 3'D X 4'
5.2- C114	Frac Ovhd Vent Comp K.O. Drum	6.0	4.0	CS	10	150	Vertical	
5.2- C116	Stabilizer Ovhd Accum (Hot)	17.0	5.5	CS	50	350	Horizontal	
5.2- C117	Stabilizer Ovhd Accum (Cold)	11.0	3.5	CS	50	150	Horizontal	Boot: 1.5'D X 4'

Towers

Equipment No.	Equipment Description	Height (T-T in ft.)	Diameter (ID in ft.)	Material	Design Conditions Pres (psig)	Design Conditions Temp (°F)	No. of Trays	Type of Trays
5.2- C110	Fractionator	140	Trays 1-46: 13	A-285	50	850	46	Valve
5.2- C111			Trays 47-60:17.0				14	Valve
5.2- C115	AGO Product Stripper	24	7.0	A-285	50	850	6	Valve
	Distillate Product Stabilizer	75	Trays 1-16:8.5	A-285	50	550	16	Valve
			Trays 17-30:10.0				14	Valve

Sheet 1

Tabl 10.6

PLANT 5 MAJOR EQUIPMENT SUMMARY - continued

Fired heaters

Equipment No.	Equipment Description	Absorbed Duty (MM Btu/hr)	Fired Duty (MM Btu/hr)	Type of Heater	Tube Material	Design Conditions Pres (psig)	Design Conditions Temp (°F)
5.1- F101	Hydrogen Preheater	118.0	141.6		T-347	2850	650
5.2- F102	Fractionator Reboiler	121.8	146.2		T-347	50	850

Heat Exchangers

Equipment No.	Equipment Description	Duty (MM Btu/hr)	Type of Exchanger	No. Shells/ Area/Shell (sq ft)	Design Conditions Tube P/T (psig/°F)	Design Conditions Shell P/T (psig/°F)	Material of Construction Tube	Material of Construction Shell	Air-Fin BHP
5.1- E101	Reactor Effl/Feed Preheater	79.7	Shell & Tube	1/ 7180	2650 / 800	2750 / 650	CS	CS	
5.1- E102	Reactor Effl/H2 Preheater	50.7	Shell & Tube	1/ 4760	2650 / 650	2850 / 550	CS	CS	
5.1- E103	Reactor Effl/HLPS Liquid	14.5	Shell & Tube	1/ 4380	150 / 550	2600 / 600	CS	CS	
5.1- E104	Hot HP Sep Vapor Cooler	23.5	Air-Fin	1/ 3160	2600 / 450	---	T-316L	--	190
5.1- E105	Hot LP Sep Vapor Cooler	7.8	Air-Fin	1/ 2030	150 / 300	---	CS	--	60
5.1- E106	Hot HP Sep Liq Steam Gen	34.2	Shell & Tube	1/ 12630	200 / 400	150 / 550	ADM	CS	
5.2- E107	Frac Ovhd Cond	93.4	Air-Fin	1/ 43800	100 / 150	---	CS	--	750
5.2- E108	Frac Ovhd Vapor Cond	37.5	Air-Fin	1/ 17600	10 / 400	---	CS	--	300
5.2- E109	AGO Prod Steam Gen	22.9	Shell & Tube	1/ 5850	200 / 400	100 / 550	ADM	CS	
5.2- E110	AGO Prod Cooler	46.4	Air-Fin	1/ 20460	50 / 450	---	ADM	--	370
5.2- E111	Frac Bottoms/Feed Ex	39.5	Shell & Tube	1/ 13500	150 / 800	100 / 600	CS	CS	
5.2- E112	Frac Bottoms Steam Gen	59.0	Shell & Tube	1/ 18000	200 / 400	100 / 550	ADM	CS	
5.2- E113	Frac Bottoms Cooler	43.9	Air-Fin	1/ 14030	50 / 450	---	CS	--	350
5.2- E114	Distillate Stabilizer Cond	30.4	Air-Fin	1/ 14270	100 / 150	---	CS	--	240
5.2- E115	Dist Stabil Ovhd Vap Cooler	6.0	Air-Fin	1/ 980	50 / 350	---	CS	--	50
5.2- E116	Distillate Stabil Reboiler	40.5	Kettle	1/ 11400	450 / 550	50 / 550	CS	CS	
5.2- E117	1st Distillate Prod Cooler	15.2	Air-Fin	1/ 3700	150 / 500	---	CS	--	120
5.2- E118	2nd Distillate Prod Cooler	1.6	Shell & Tube	1/ 2360	100 / 150	150 / 150	CS	CS	
5.2- E119	Frac Ovhd Vent Comp Aftercooler	0.5	Shell & Tube	1/ 150	100 / 150	50 / 250	CS	CS	

Sheet 2

Table 10.6

PLANT 5 MAJOR EQUIPMENT SUMMARY - continued

Compressors

Equipment No.	Equipment Description	Flow Rate (M lb/hr)	Flow Rate (MMSCFD)	Brake Horsepower	Design Conditions Pres Inlet (psig)	Pres Outlet (psig)	Temp (°F)	Driver
5.1- K101	Recycle Hydrogen	26.0	53.2	371	2450	2700	200	Elect Motor
5.2- K102	Fractionator Ovhd Vent	0.9	0.4	9	1	15	190	Elect Motor

Pumps/Expander

Equipment No.	Equipment Description	Flow Rate (gpm)	Delta Pres (psi)	Brake Horsepower	Design Conditions Pres (psig)	Temp (°F)	Driver	# Required
5.1- G101	Reactor Charge	1560	2670	3240	2750	350	Expander	1
5.1- G102	Low Press Wash Water	8	100	1	150	150	Elect Motor	2
5.1- G103	High Press Wash Water	113	2400	234	2650	150	Elect Motor	2
5.1- G104	Sour Water Drum Outlet	139	35	4	100	150	Elect Motor	2
5.2- G105	Fractionator Reflux	496	100	43	150	400	Elect Motor	2
5.2- G106	Dist Stabilizer Feed	239	20	4	50	150	Elect Motor	2
5.2- G107	Frac Ovhd Sour Water	10	50	1	100	150	Elect Motor	2
5.2- G108	AGO Product	912	145	114	200	550	Elect Motor	2
5.2- G109	Fractionator Bottoms	4138	90	322	150	800	Elect Motor	2
5.2- G110	Dist Stabilizer Reflux	320	35	10	100	350	Elect Motor	2
5.2- G111	Stabilizer Ovhd Liquid Prod	33	190	6	250	150	Elect Motor	2
5.2- G112	Stabilizer Ovhd Sour Water	10	40	1	100	150	Elect Motor	2
5.2- G113	Distillate Prod	1249	80	86	150	500	Elect Motor	2
5.1- Y101	Hot HP Sep Liquid Expander	2005	2350	-3240	2600	550	-	1

11. PLANT 6

11. Plant 6 (Hydrogen Purification)

11.0 Design Basis Criteria and Considerations

A centralized hydrogen purification unit is being proposed. The unit will have two major sections:

1. Recovery of hydrogen from high pressure purge gas from the four coal liquefaction plants and gas oil hydrotreater.
2. Recovery of hydrogen from lower pressure purge gas from four coal liquefaction plants, the gas plant and hydrotreaters.

The first section will take sour purge gas from the coal liquefaction plants and gas oil hydrotreater. The hydrogen-rich gas will be water-washed and amine-treated to remove ammonia, carbon dioxide, and hydrogen sulfide. The amine treater off-gas is then dried over molecular sieves before feeding to the COSORB absorber for the removal of carbon monoxide. Part of the scrubbed gas will be recycled to plant 2 and the rest will be sent to membrane units for hydrogen recovery. This process was selected because the pressure of the hydrogen product is much higher than for a pressure swing adsorber, thus saving recompression costs (both capital and operating). The hydrogen product at a minimum purity level of 99.0 mol% and H_2 product from PSA unit will be compressed to required pressure. The nonpermeate product will be sent to the PSA unit.

The low pressure gas from the overhead of the Plants 2, 3, 4 and 5 is treated and compressed and then sent to the pressure swing adsorber. Pressure swing adsorption will be used for this service because of the high recovery of hydrogen and because the feed gas pressure is consistent with the point of maximum recovery of hydrogen. The hydrogen product at a minimum of 99.0 mol% purity will be compressed and combined with the hydrogen product from the membrane unit. The light hydrocarbon tail gas stream will be sent to the Gas Plant.

The original flow scheme for the Hydrogen Purification Plant was for the compression and treating of the low pressure gases be done in the Gas Plant with the absorber/deethanizer overhead stream being sent to Plant 6 for hydrogen recovery in the pressure swing adsorption (PSA) unit. Because the low pressure gases contained a high percentage of hydrogen and the resultant vapor-liquid equilibrium considerations, it was impossible to obtain an acceptable recovery of propane and butanes in the absorber/deethanizer. Therefore, the flow scheme was switched to place the PSA unit before the absorber/deethanizer. This then caused the move of the compression and treating of the low pressure gases to Plant 6.

The high pressure hydrogen purge streams were sent to a membrane unit for hydrogen recovery rather than a PSA unit because the membrane can better accept a high pressure feed stream, resulting in a higher pressure hydrogen product. This saved hydrogen compression costs. The PSA unit was preferred in the low pressure service because of the higher hydrogen recovery and lower pressure drop in the system. This also saved hydrogen compression costs.

The first stage hydrogen compression on the PSA product exited at the outlet pressure of the membrane unit. The two hydrogen streams were combined before being compressed to the required pressure to save compressor costs.

11.1 Process Description and Process Flow Diagram

The Hydrogen Purification Plant has two sections: (1) recovery of purified hydrogen from high pressure purge gas streams in membrane separation units, and (2) recovery of purified hydrogen from low pressure offgas streams in pressure swing adsorption (PSA) units. These are designated as Plant 6.1 and 6.2, respectively. Figure 11.1 is the process flow diagram for Plant 6.1 where Figures 11.2 and 11.3 combined show the process flow diagram for Plant 6.2.

Plant 6.1 High Pressure Purge Gas by Membrane

Purge Gas Scrubbing. The portion of the cold high pressure separator vapor which is purged from the Coal Liquefaction Plants is combined with H_2 product from gas oil hydrotreater and is sent to Plant 6. The sour gases are sent first to a water wash tower (C104) to remove ammonia. The ammonia water is sent to Plant 38 for the recovery of anhydrous ammonia. The gas stream exiting the water wash tower is sent to the amine treater (C109) for the removal of carbon dioxide and hydrogen sulfide. Carbon monoxide is removed by means of the COSORB absorber. The COSORB solvent consists of an active component, cuprous aluminum chloride (CuAlCl4), in an aromatic base (toluene). This solvent works by forming a chemical complex with CO but is inert towards other gases. Since the COSORB solvent reacts quantitatively with any water present, the feed gas has to be dried to less than 1 ppm concentration. The reversible complexion of CO in COSORB solvent occurs sufficiently fast so that the COSORB process can be considered as analogous to a classical absorption and stripping process not that different from that of amine.

The rich amine is sent to a common amine regeneration system located in the low pressure recovery section of the plant. The rich COSORB solvent is sent to a common stripper also located in the low pressure recovery section of the plant. Heat provided by low-pressure steam removes CO from the solvent. Carbon monoxide removed from the COSORB stripper is combined with acid gases recovered from the amine regeneration unit and sent to plant 11. The capacity for the water wash and amine treater towers are provided in two parallel trains for reliability.

Part of the treated hydrogen purge stream is recycled back to coal liquefaction and the rest is sent to the membrane unit.

Membrane Separation Unit. The scrubbed high pressure purge gas is sent to membrane separation units (V101) for hydrogen recovery. This process was selected because the pressure of the hydrogen and nonpermeate products is much higher than for a pressure

swing absorber, thus saving recompression costs (both capital and operating). The hydrogen product at a minimum purity level of 99 mol% and the purified hydrogen streams from the PSA unit are combined and compressed in the second stage hydrogen compressor (K106), driven by an electric motor. The discharge of the second stage compressor is cooled in an air-fin exchanger (E111). Part of the discharge is sent to plant 4 as part of H_2 makeup. The other part is combined with the treated H_2 purge stream and is compressed to 3300 psig in K-108 and recycled to plant 2. The rest of E111 discharge is sent to K107 and is compressed to the pressure required by plant 5. The K107 discharge stream is cooled in an air-fin exchanger (E112) and with cooling water (E113) before exiting the plant to the makeup hydrogen system. The nonpermeate product is sent to the PSA units for recovery of residual hydrogen.

Plant 6.2 Low Pressure Offgas by PSA

Low Pressure Gas Compression. Miscellaneous gas streams are recovered from Coal Liquefaction (Plant 2), Gas Plant (Plant 3), the Naphtha Hydrotreater (Plant 4), and the Gas Oil Hydrotreater (Plant 5). The low pressure gases (less than 45 psig) are sent to the Low Pressure Gas Compressor (K101). The compressor will have a suction pressure of 5 psig and an intermediate suction of 45 psig. The discharge of the first stage compressor will be cooled in air-fin exchanger E101. The second stage compressor (K102) discharge will be at 250 psig. The discharge from the compressor will be cooled in air-fin exchanger E102.

Low Pressure Gas Scrubbing. Gases after compression are sent first to a water wash tower (C103) to remove ammonia. The ammonia water is sent to Plant 38 for the recovery of anhydrous ammonia. The gas stream exiting the water wash tower is sent to the amine treater (C106) for the removal of carbon dioxide and hydrogen sulfide. After drying over molecular sieves, the amine treater off-gas is sent to the COSORB absorber for the removal of carbon monoxide. The rich amine is sent to a common amine regeneration system. The rich COSORB solvent is combined with the rich solvent from the high pressure recovery section for regeneration in the common stripper. Carbon monoxide removed from the COSORB striper is combined with the acid gases recovered from the amine regeneration unit and sent to the sulfur recovery unit (Plant 11). The capacity for the water wash and amine treater towers are provided in two parallel trains for reliability.

Pressure Swing Adsorption Unit. This section of the plant is fed the low pressure gas (200 psig) from the overhead stream from the amine treater, the off-gas from the rich COSORB solvent flash drum, and the membrane nonpermeate product. Pressure swing adsorption (PSA) will be used for this service because of the high recovery of hydrogen. The hydrogen product is at a minimum purity of 99.0 mol %. The product from the PSA unit (V102) is compressed from 190 psig to 500 psig in motor-driven reciprocating compressors (K105). This first stage of compression takes the lower pressure stream up to the product pressure of the membrane separation unit. The first stage discharge is

cooled in an air-fin exchanger (E110) and will be sent to Plant 6.1 for further compression. The PSA tail gas stream will be compressed to 200 psig in a two-stage compressor (K103 and K104), cooled by intercooler E107 and aftercoolers E108 and E109, and sent to the Gas Plant for recovery of propane and heavier hydrocarbons.

Amine Regeneration. As shown in Figure 11.3, rich amine streams from the high pressure and intermediate pressure amine treaters are collected in the combined amine separator (C111). Flashed acid gases are sent to the Sulfur Plant (Plant 11). The rich amine is filtered (Y101) and preheated with the lean amine bottoms in exchanger E105 before entering the amine regenerator C112. The overhead acid gas stream is sent to Plant 11. The regenerated lean amine is cooled in E105 and enters the regenerated amine surge drum (C114). Lean amine is then cooled in exchanger E106, filtered (Y102 and Y103), and pumped back to the intermediate pressure amine treater by pump G101 and to the high pressure amine treater by pump G102.

COSORB Solvent Regeneration. As shown in Figure 11.4, the rich solvent streams from the high pressure and intermediate pressure COSORB absorbers are pooled in the combined flash drum (C125). The inert gas components such as hydrogen and methane that have a physical solubility in the aromatic base of the COSORB solvent are flashed off and fed to the Pressure Swing Adsorption (PSA) unit. The CO-rich solvent from the flash drum is preheated with the lean solvent and passed to the stripper. Heat provided by the low-pressure steam in the reboiler removes CO from the rich solvent. Carbon monoxide removed from the COSORB stripper is combined with acid gases recovered from the amine regeneration unit and sent to the sulfur recovery unit (Plant 11).

Figur 11.1

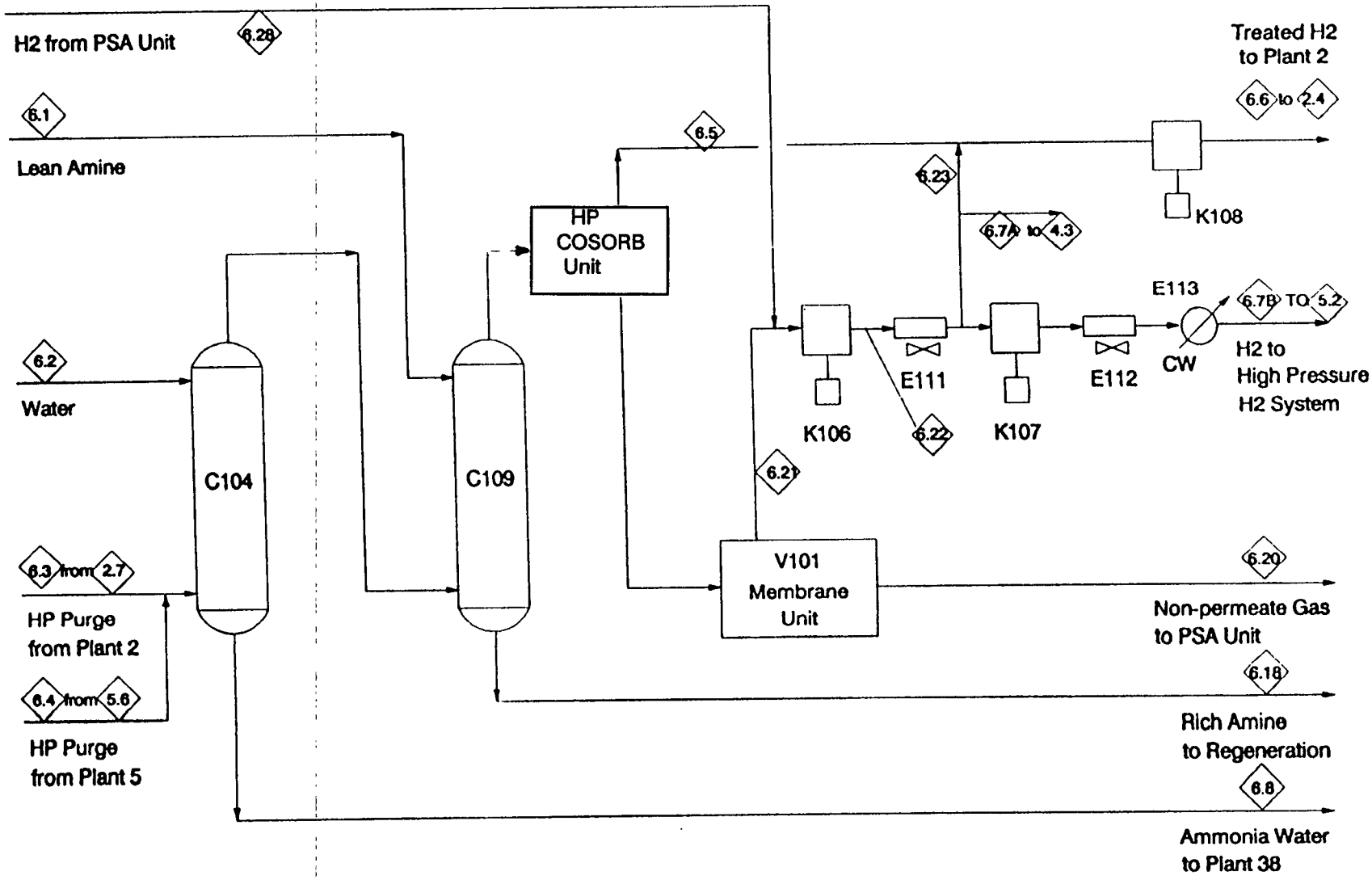

Plant 6.1

High Pressure H2 Recovery

Figure 11.2

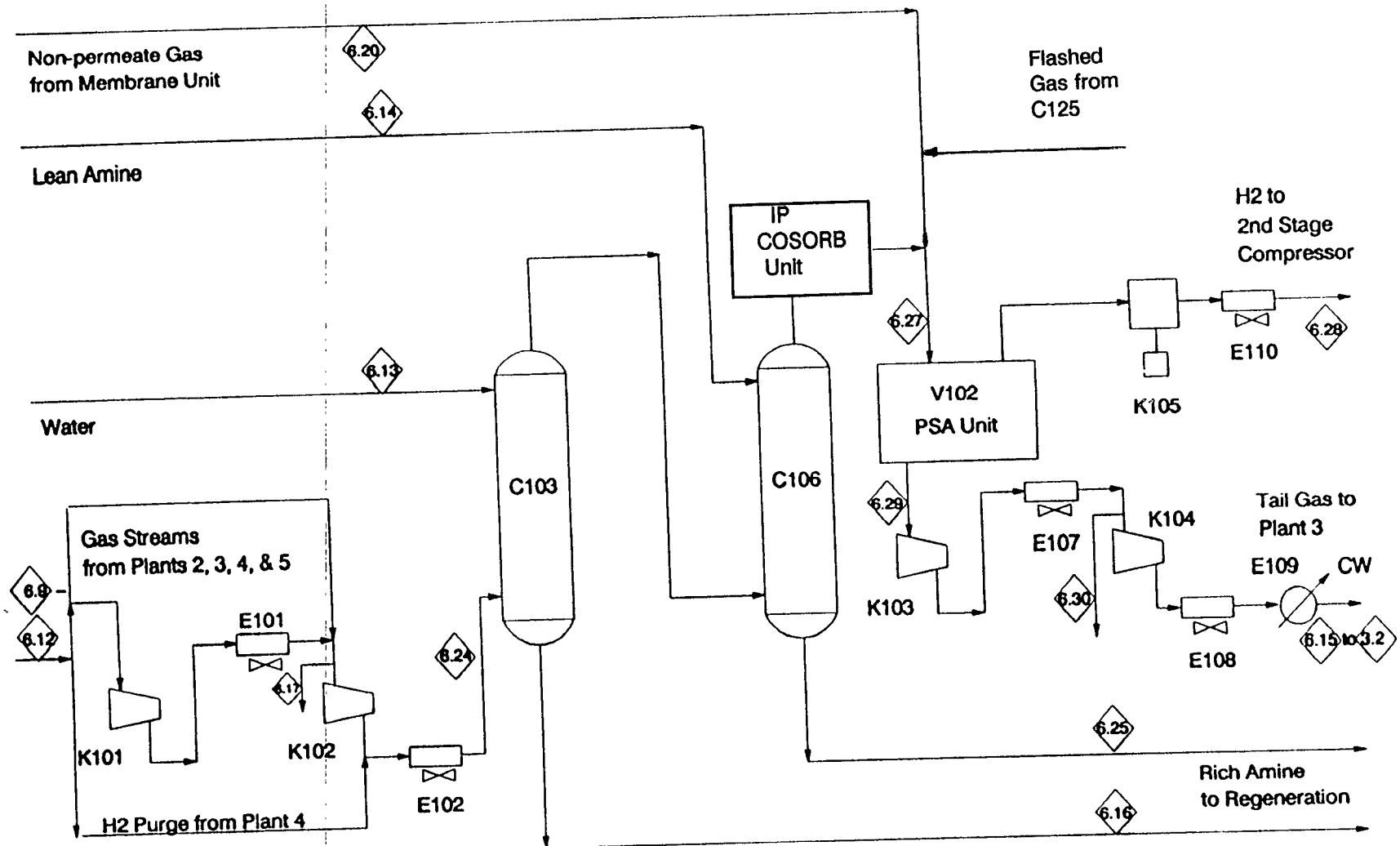

NOTE: 6.9 from 2.8 ; 6.10 from 3.3

6.11 from 4.1 + 4.2a + 4.2b

6.12 from 5.7 + 5.8 + 5.9 + 5.15

Plant 6.2
Low Pressure H2 Recovery

Figure 11.3

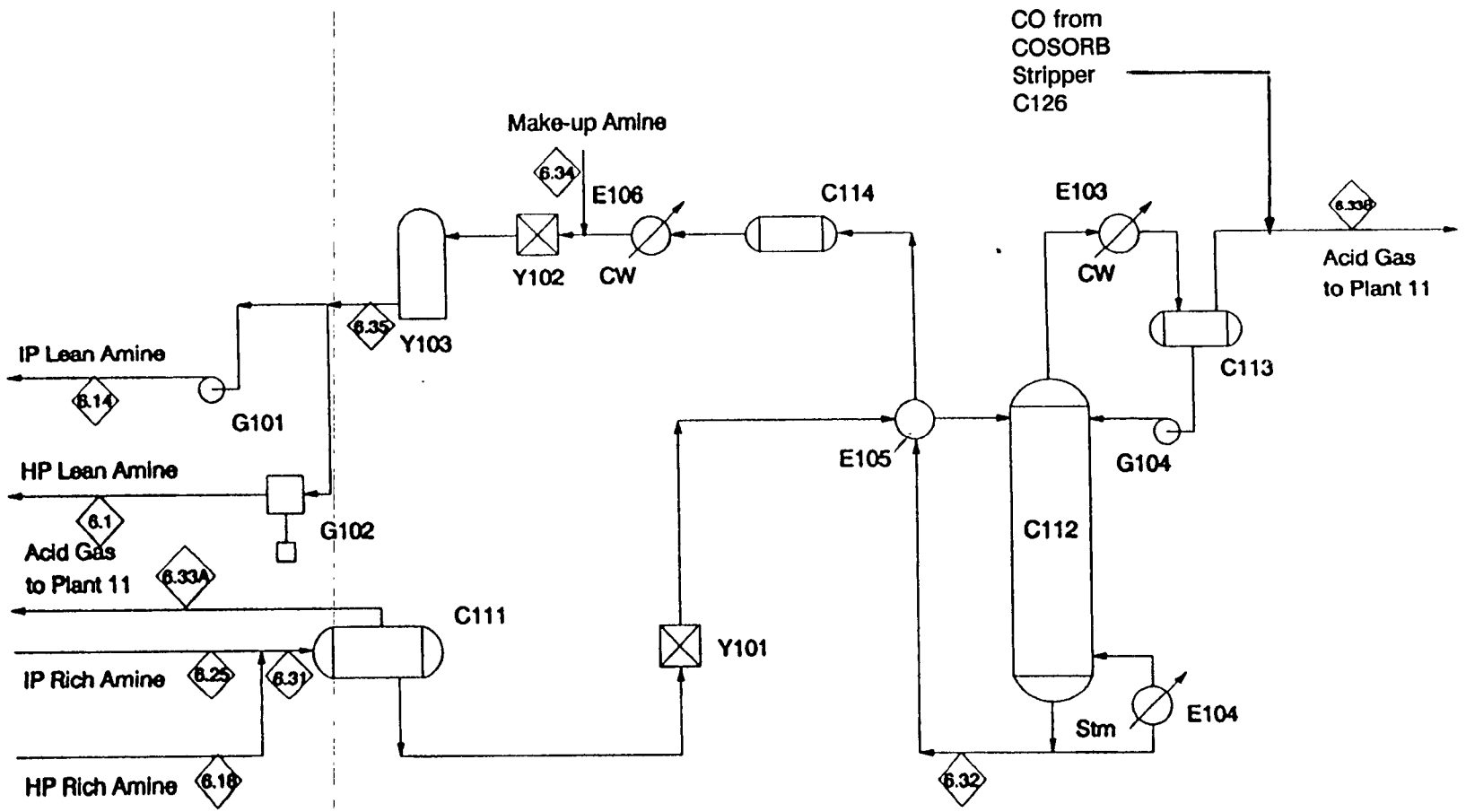

Plant 6.2
Amine Regeneration

Figure 11.4

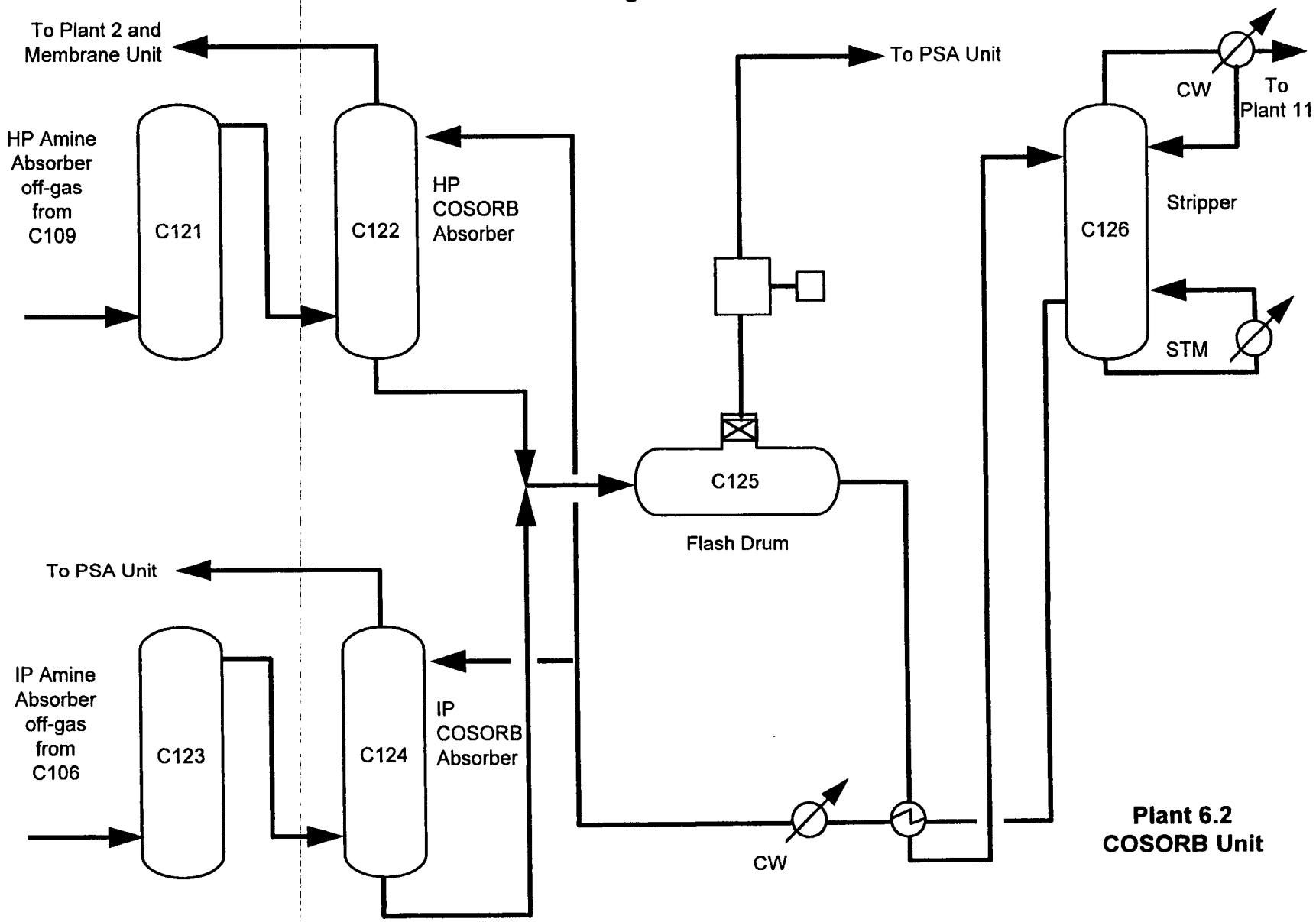

Plant 6.2 COSORB Unit

o:\0195096\flow.ppt

11.2 Mat rial Balance

The material balance for the plant is shown in Table 11.1.

Table 11.1

PLANT 6 : INPUT

Stream No.	6.3	6.4	6.2 +6.13	6.9	6.10	6.11	6.12	6.34	
Components (Lb/Hr)	PL-2 HP Gas	PL-5 HP Gas	Wash Water	PL-2 LP Gas	PL-3 LP Gas	PL-4 LP Gas	PL-5 LP Gas	Makeup Amine	Total Input
H2O	188	9	42,000	7,052	42	50	824	768	50,933
H2S	1,096			736	17		32		1,881
NH3		5		120	24		611		760
CO	21,612			4,988					26,600
CO2	24,880			11,004	88				35,972
H2	27,980	379		7,056		928	1,871		38,214
N2	9,760	267		2,168		169	1,961		14,325
C1	37,204	203		13,248	9	600	1,483		52,747
C2	20,540	114		13,020	568	417	1,789		36,448
C3	16,168	93		16,816	903	487	2,098		36,565
C4	5,988	43		10,372	1,784	1,656	1,348		21,191
C5-350	6,920	58		28,312	1,879	777	2,558		40,504
350-450	92	4		380		3	110		589
450-650	4			4					8
650-850									
850-1000									
MEA								20	20
Coal (MAF)									
Ash									
Total	172,432	1,175	42,000	115,276	5,314	5,087	14,685	788	356,757
Temp,F	120	169	100	150	130	130	135	80	-----
Pres,Psig	2,950	2,450	-----	45	45	-----	10	25	-----

PLANT 6 : OUTPUT

Stream No.	6.8 +6.16	6.7A +6.7B	6.6	6.17 +6.30	6.15	6.33A +6.33B			
Components (Lb/Hr)	Sour Water	H2 to PL-5	H2 to PL-2	KO Liq to PL-4	PSA TG to PL-3	Total AcidGas			Total Output
H2O	47,691		1,016	268	1,176	782			50,933
H2S	86				1	1,794			1,881
NH3	760								760
CO						26,600			26,600
CO2	1,680					34,292			35,972
H2		410	35,036		2,746	22			38,214
N2			528		13,797				14,325
C1	2	42	12,960		39,719	24			52,747
C2	1		7,344	8	29,027	68			36,448
C3	2		5,800	50	30,641	72			36,565
C4	1		2,184	73	18,894	39			21,191
C5-350	4		1,000	2,331	37,145	24			40,504
350-450	263			276	19	31			589
450-650	5				3				8
650-850									
850-1000									
MEA					20				20
Coal(uncon)									
Ash									
Total	50,495	452	65,868	3,006	173,188	63,748			356,757
Temp,F	120	100	130	-----	100	87			-----
Pres,Psig	240	1,530	-----	-----	220	50			-----

11.3 Major Equipment Summary

The major equipment summary for the plant is shown in Table 11.2.

Tabl 11.2

01/26/95

MAJOR EQUIPMENT SUMMARY
LOW RANK COAL

Plant 6 - Hydrogen Purification

Reactors and Vessels

Equipment No.	Equipment Description	Length (T-T in ft.)	Diameter (ID in ft.)	Material	Design Conditions Pres (psig)	Design Conditions Temp (°F)	Orientation	Comments	# Req
6.2- C101	1st Stg PSA Feed Comp K.O.	7.0	3.5	CS	50	150	Vertical		2
6.2- C102	2nd Stg PSA Feed Comp K.O.	7.0	3.5	CS	100	150	Vertical		2
6.2- C105	IP Amine Trt Abs Inlet Sep	12.0	5.0	CS	300	150	Vertical		2
6.2- C107	IP Amine Trt Abs Outlet Sep	12.0	5.0	CS	300	150	Vertical		2
6.1- C108	HP Amine Trt Abs Inlet Sep	50.0	20.0	A-515	1650	150	Vertical		2
6.1- C110	HP Amine Trt Abs Outlet Sep	50.0	20.0	A-515	1650	150	Vertical		2
6.2- C111	Combined Amine Btms Sep	40.0	10.0	A-515	1650	150	Horizontal		2
6.2- C113	Amine Regen Ovhd Accum	25.0	10.0	A-516-70	50	200	Horizontal		2
6.2- C114	Regen Amine Surge Drum	20.0	10.0	A-516-70	300	150	Vertical		2
6.2- C116	1st Stg PSA TG Comp K.O.	9.0	4.0	A-516	50	150	Vertical		2
6.2- C117	2nd Stg PSA TG Comp K.O.	9.0	4.0	A-516	100	150	Vertical		2
6.2- C118	1st Stg H2 Comp K.O.	10.0	5.0	A-516	300	150	Vertical		3
6.1- C119	2nd Stg H2 Comp K.O.	16.0	8.0	A-515	550	150	Vertical		3
6.1- C120	3rd Stg H2 Comp K.O.	5.0	2.5	A-515	1400	150	Vertical		3
6.2- C121	HP COSORB Feed Gas Dryer		proprietary		1650	150	Vertical		2
6.2- C123	IP COSORB Feed Gas Dryer		proprietary		300	150	Vertical		2
6.2- C125	Rich COSORB Solvent Flash Drum		proprietary		1650	150	Horizontal		1

Tanks

Equipment No.	Equipment Description	Height (T-T in ft.)	Diameter (ID in ft.)	Material	Design Conditions Pres (psig)	Design Conditions Temp (°F)	Orientation	Comments	# Req
6.2- C115	Makeup Amine Tank	30.0	22.0	A-516-70	5	150	Vertical		1
6.2- C127	Makeup COSORB Solv. Tank				5	150	Vertical		1

Tabl 11.2

PLANT 6 MAJOR EQUIPMENT SUMMARY - continued

Towers

Equipment No.	Equipment Description	Height (T-T in ft.)	Diameter (ID in ft.)	Material	Design Conditions Pres (psig)	Design Conditions Temp (°F)	No. of Trays	Type of Trays	# Req
6.2- C103	IP Water Wash Tower	30	5.0	CS	300	150	8	Valve	2
6.1- C104	HP Water Wash Tower	30	4.5	A-515	1650	150	8	Valve	2
6.2- C106	IP Amine Absorber	45	5.5	CS	300	150	16	Valve	2
6.1- C109	HP Amine Absorber	45	5.5	A-515	1650	150	16	Valve	2
6.2- C112	Amine Regenerator	45	11.0	SA-516-70	50	300	16	Valve	2
6.2- C122	HP COSORB Absorber		proprietary						1
6.2- C124	IP COSORB Absorber		proprietary						1
6.2- C126	COSORB Stripper		proprietary						1

Heat Exchangers

Equipment No.	Equipment Description	Duty (MM Btu/hr)	Type of Exchanger	No. Shells/ Area/Shell (sq ft)	Design Conditions Tube P/T (psig/°F)	Design Conditions Shell P/T (psig/°F)	Material of Construction Tube	Material of Construction Shell	Air-Fin BHP	# Req
6.2- E101	PSA Feed Comp Intercooler	2.6	Air-Fin	1/ 2700	100 / 250	10 / 250	CS	--	13	2
6.2- E102	PSA Feed Comp Aftercooler	21.7	Air-Fin	1/ 4330	300 / 400	10 / 250	CS	--	110	2
6.2- E103	Amine Regen Condenser	146.2	Air-Fin	1/ 12400	100 / 150	50 / 300	CS	--	730	2
6.2- E104	Amine Regenerator Reboiler	202.2	Kettle	1/ 25500	100 / 350	50 / 300	304-LSS	CS	--	2
6.2- E105	Lean/Rich Amine Exchanger	11.0	Shell & Tube	1/ 9060	300 / 300	300 / 300	CS	CS	--	2
6.2- E106	Lean Amine Cooler	57.3	Air-Fin	1/ 8370	100 / 150	300 / 150	CS	--	285	2
6.2- E107	PSA TG Comp Intercooler	13.7	Air-Fin	1/ 5350	100 / 350	10 / 250	CS	--	70	2
6.2- E108	PSA TG Comp 1st Aftercooler	18.1	Air-Fin	1/ 5860	300 / 300	10 / 250	CS	--	90	2
6.2- E109	PSA TG Comp 2nd Aftercooler	4.8	Shell & Tube	1/ 6040	100 / 150	250 / 150	CS	CS	--	2
6.2- E110	1st Stg H2 Comp Intercooler	9.0	Air-Fin	1/ 1930	600 / 400	10 / 250	CS	--	45	3
6.1- E111	2nd Stg H2 Comp Intercooler	25.2	Air-Fin	1/ 3680	1400 / 400	10 / 250	CS	--	125	3
6.1- E112	3rd Stg H2 Comp 1st Afterclr	0.2	Air-Fin	1/ 200	3500 / 400	10 / 250	CS	--	1	3
6.1- E113	3rd Stg H2 Comp 2nd Afterclr	0.1	Shell & Tube	1/ 110	100 / 150	3500 / 150	CS	CS	--	3

Sheet 2

11.4 Utility Summary

The utilities for this plant are summarized in Table 11.3.

Table 11.3

Utility Summary

	Plant 6.1	Plant 6.2
Steam (50 psig)	----	202,000 lbs/hr
Cooling Water	7 gpm	343 gpm
Water (Makeup)	20 gpm	64 gpm
Electricity	16,200 KW	21,900 KW

11.5 Water Summary

The following table presents the water summary for Plant 6.

Table 11.4
Water Summary for Plant 6

	High Pres. Water Wash	Compr. Suction K.O. Liquid (Total)	Inter. Pres. Water Wash
Makeup Water, gpm	20	--	64
Sour Water, lb/hr			
H_2O	9,742	268	39,171
H_2S	4	-	82
NH_3	8	-	803
CO_2	47	-	1,633
HC	69	2,738	446
Total	9,870	3,006	42,135
Sour Water, gpm	20.1	8	87.9
Disposition of Sour Water	Plant 38	Plant 4	Plant 38

12. PLANT 8

12. Plant 8 (Critical Solvent Deashing Unit - ROSE-SR)

12.0 Design Basis, Criteria and Considerations

Feed Rate, BPSD 19,134 (standard) 21,126 (actual)

Component	Composition, wt% Feed [1]	Ash Concentrate [2]
Ash	18.13	31.77
Carbon	70.80	58.62
Hydrogen	4.58	3.89
Nitrogen	0.80	0.65
Sulfur	1.76	1.58
Oxygen	3.92	3.49
Total	100.00	100.00

(1) Contains unconverted coal 19.7 wt% and solvent 0.9 wt%
(2) Contains unconverted coal 34.5 wt% and solvent 3.1 wt%

12.1 Process Description and Process Flow Diagram

The simple operation of the ROSE-SR process is illustrated schematically on the Process Flow Sketch of Plant 8. The feedstock is charged through a mixer Y101, where it is contacted with light hydrocarbon solvent at elevated temperature and pressure. A portion of the solvent is mixed with the feed in Y101, and the remainder of the solvent enters through a separate solvent inlet that provides countercurrent solvent flow. The mixture passes to the asphaltene separator, C101, where the heavy asphaltene/solids fraction drops out of solution and is withdrawn as a liquid from the bottom of the separator. The asphaltene and residual solvent pass through heater F101 to flash tower C102, where the solvent is flashed and stripped from the product and the asphaltene product comes out as ash concentrate.

The solvent-deashed oil phase flows from the top of C101 through heat exchanger E101, where it is heated by the circulating solvent before entering heater F102. The temperature is elevated above the critical temperature of the solvent before the solvent-deashed oil mixture enters the deashed oil separator.

At this increased temperature, the deashed oil (DAO) is virtually insoluble in the solvent.

Therefore, a phase separation occurs in the DAO separator, C103. The DAO phase is withdrawn from the bottom of C103 and stripped of its solvent in tower C104. The ROSE extract thus produced comes out of tower C104. The substantially DAO-free supercritical solvent provides a significant part of the enthalpy needed to increase the temperature of the overhead stream from C101 to the conditions in C103. This circulating solvent flows overhead from C103 through exchanger E101, giving up heat to the solvent-DAO solution from C101. The circulating solvent is further cooled in exchanger E102 before returning to C101 via the solvent circulation pump G101. In many applications, E102's process duty is negligible, though the exchangers are sized to handle operational upsets such as an increased charge temperature. E102 is overdesigned to enable the ROSE unit to handle upsets in charge temperature. The solvent circulation pump G101 develops only the differential pressure necessary to overcome the separator system pressure drop.

The small amount of solvent dissolved in the heavy phases from vessels C101 and C103 (between 7% and 15% of the total extraction solvent) is recovered by conventional stripping in C102 and C104. The recovered solvent is condensed in E103 and then collected in the solvent surge drum C105. This small flow of solvent is pumped by the recycle solvent pump G102 into the large flow of high-pressure circulating solvent upstream of the solvent circulation pump, G101.

FIGURE 12.1 PROCESS FLOW DIAGRAM

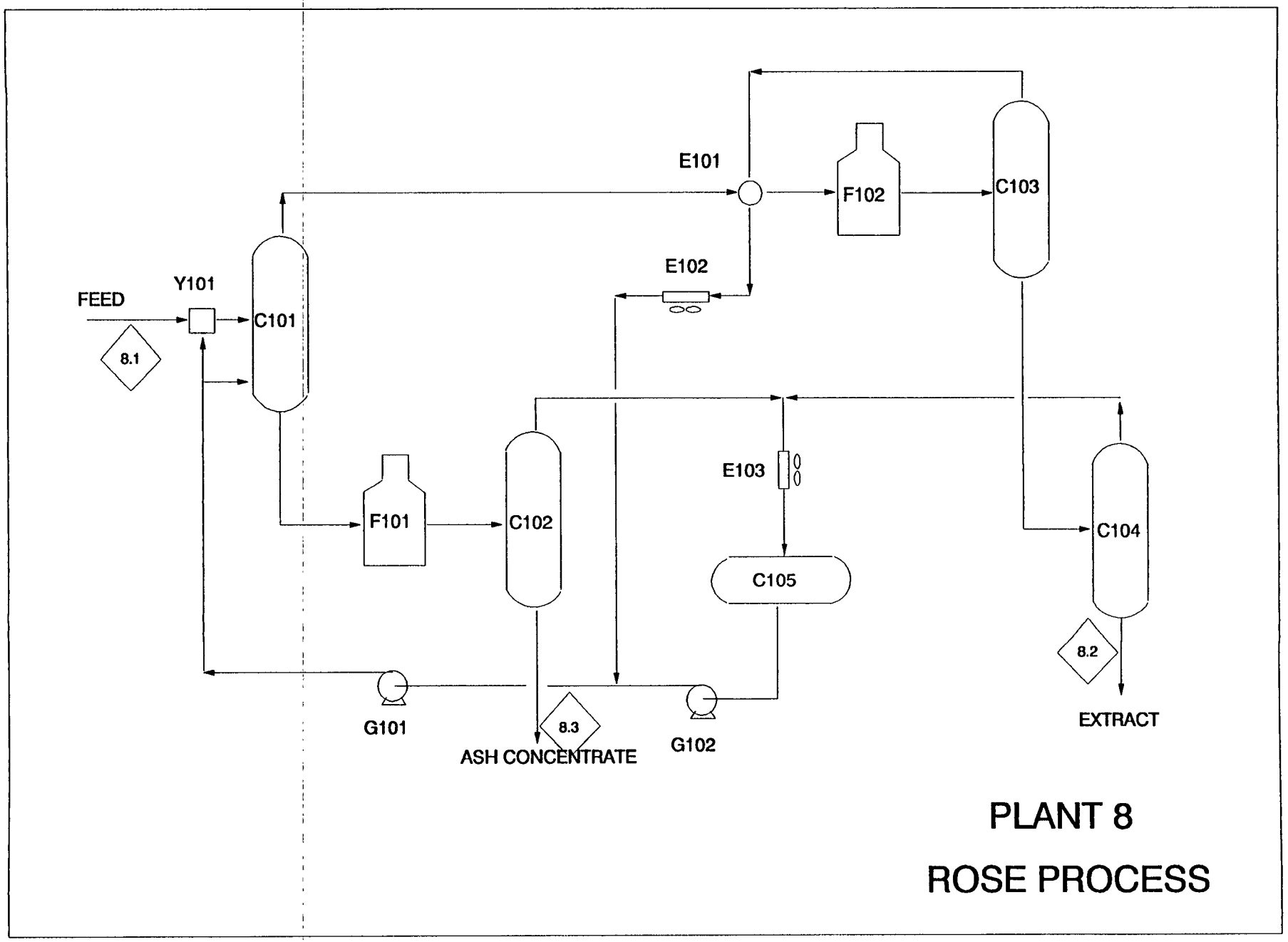

ROSE

12.2 Material Balance

The overall material balance for the Critical Solvent Deashing Unit is presented in Table 12.1.

Table 12.1

Material Balance
(only one train required)

Stream No.	lbs/hr 8.1 Feed	8.2 Extract	8.3 Ash Concentrate
850°F-	3,028	3,028	0
850-1000°F	7,924	5,396	2,528
1000°F+	311,772	214,452	97,320
Unconverted Coal	102,340	----	102,340
Ash	94,128	----	94,128
Total	519,192	222,876	296,316
Tons/day	6,230	2,674	3,556

12.3 Major Equipment Summary

The major equipment summary for the plant is shown in Table 12.2 below:

Table 12.2

Equipment Number	Equipment Description
8 - C101	Asphaltene Separator
8 - C102	Flash Tower
8 - C103	DAO Separator
8 - C104	Solvent Stripper
8 - C105	Solvent Surge Drum
8 - E101	Solvent/DAO Solution Exchanger
8 - E102	Solvent Cooler
8 - E103	Solvent Condenser
8 - G101	Solvent Circulation Pump
8 - G102	Recycle Solvent Pump
8 - F101	Ash Concentrate Heater
8 - F102	Extract Heater
8 - Y101	Feed/Solvent Mixer

Due to the proprietary nature of this unit, Kerr-McGee did not provide the above major equipment list and/or major equipment sizes. The above list is a non-confidential version prepared by Bechtel for the reader's convenience.

12.4 Utility Summary

The utility summary for this plant is shown in Table 12.3.

Table 12.3
Plant 8

Utility	Units	Rate
Steam Consumption - 150 psig	(lbs/hr)	14,544
Fuel Gas - Fired	(MMBtu/hr)	121
	(MMSCFD)	3
Electricity	(kW)	2,496

Note: Fuel gas rate in MMSCFD is based on a gross heating value of 1,000 Btu/SCF.

12.5 Water Summary

There is essentially no water used in this process, however, stripping steam produces 14,544 lbs/hr of waste water.

13. PLANT 9

13. Plant 9 (Hydrogen Production by Coal Gasification)

13.0 Design Basis, Criteria and Considerations

Plant 9 is designed to gasify 3,556 tons/day of Ash Concentrate from ROSE-SR Plant and 7,022 tons/day of MF coal. Syngas from the gasifiers is used to produce 452 MMSCFD of 99 volume percent hydrogen product as required by the coal liquefaction and hydrotreating plants. The hydrogen poor purge stream from this gasifier is Medium Btu fuel gas.

Feed Streams

- 3,556 TPD ash concentrate from Plant 8 (ROSE-SR)
- 7,022 TPD clean MF coal from Plant 1 (Coal Preparation)
- 8,857 TPD of 99.5 volume percent oxygen from Plant 10 (Air Separation)

Feed analysis and compositions are presented in Table 13.1.

Product Streams

- 452 MMSCFD of 99.0 volume percent hydrogen
- 105 MMSCFD of Medium Btu fuel gas (gross)
- 23 MMSCFD of acid gas containing H_2S as feed to Sulfur Plant (Plant 11)
- 442 MMSCFD of stripped CO_2 waste gas for discharge to the atmosphere
- 1,659 TPD (dry basis) of slag and soot to landfill disposal

Product compositions are presented in Table 13.2.

Gasifier Yields

- For ash concentrate, 33.4 SCF of $CO + H_2$ and 8 SCF of CO_2 per pound of dry and ash-free feed
- For clean coal, 31.5 SCF of $CO+H_2$ and 7.2 SCF of CO_2 per pound of dry and ash-free feed
- Average about 97% carbon conversion to syngas. Unconverted carbon is rejected with slag

TABLE 13.1

GASIFICATION FEED STREAMS

Low Rank Coal

Ultimate Analysis, %(wt.), Dry Basis

Carbon	68.5
Hydrogen	4.8
Nitrogen	1.0
Sulfur	0.5
Oxygen	18.9
Ash	6.3
HHV, Btu/lb	10,575

Ash Mineral Analysis, % (wt.)

SiO_2	35.75
Fe_2O_3	5.25
Al_2O_3	18.13
TiO_3	1.25
CaO	20.42
MgO	4.22
SO_3	11.65
K_2O	0.49
Na_2O	0.47
P_2O_5	1.00
Undetermined	1.37

Ash Concentrate

Composition, % (wt.)

850-1000°F	0.9
1000°F+	32.8
Unconverted Coal	34.5
Ash	31.8

HHV, Btu/lb 10,393

Ultimate Analysis, % (wt.), Dry Basis

Carbon	58.5
Hydrogen	3.9
Nitrogen	0.7
Sulfur	1.6
Oxygen	3.5
Ash	31.8

TABLE 13.2

GAS PRODUCT DATA

	H_2 Product Mol %	Medium Btu Gas Mol%	H_2S-Rich Off-Gas Mol%	CO_2-Rich Off-Gas Mol%
H_2O	---	---	0.50	1.59
H_2S	---	---	9.20	---
COS	---	---	0.02	---
NH_3	---	---	0.01	---
CO	---	6.71	2.79	0.09
CO_2	---	2.25	82.17	91.65
H_2	99.01	82.18	3.56	0.44
N_2	0.99	4.52	1.74	6.14
C_1	---	4.34	0.01	0.09
TOTAL	100.00	100.00	100.00	100.00
Total #-Mol/hr	49,629	11,497	2,541	48,010
MMSCFD	452	105	23	437

13.0.1 Technology Selection

Two coal gasification technologies, the Texaco and Shell processes, have been evaluated for synthesis gas production in Plant 9. The block flow diagrams for these two processes are presented on Figure 13.1.

The major differences between these two processes are as follows:

	Texaco	Shell
1.	Feed Type	
	Molten coal or coal slurry	Dried and pulverized coal to 70-90% through 200 mesh
2.	Operating Conditions	
	High pressure process. Pressure up to 1100 psig	Low to medium pressure process. Pressure up to 400 psig
3.	Gasifier Construction	
	Vertical cylindrical pressure vessel with refractory lining	Horizontal ellipsoidal vessel. Gasifier shell has a double-walled construction, the inner shell is refractory lined
4.	Heat Removal Methods	
	Direct quench syngas with water in the gasifier and gas scrubber	Recover heat by generating steam in the waste heat boilers
5.	Shift Conversion	
	Produce sufficient steam in the syngas for shift reaction	Steam injection is required for shift reaction to occur
6.	Hydrogen Production	
	Produces higher H_2/CO ratio (0.75) syngas. Less shift conversion required.	Produces low H_2/CO ratio (0.43) syngas which requires more shift catalyst for shift conversion to reach the same H_2 production.

	Texaco	Shell
7.	Horsepower for Hydrogen Compression	
	Higher pressure process. Less horse-power required	Low pressure process requires more horsepower for hydrogen compression
8.	Water Requirement	
	Relatively poor quality condensate from the gas cooling sections can be used for direct quenching of syngas	More boiler feed water of higher quality is required for steam generation in the gasifier and waste heat boiler
9.	Ability to Handle ROSE bottoms	
	Its pilot plant had demonstrated that the ash-containing residues obtained from the H-Coal liquefaction plant were process efficiently	No pilot plant result has been reported for H-Coal liquefaction residues
10.	Commercial Plant Experience	
	Several large size commercial plants have been operated success-fully since 1980's	Only small demonstration plants have been built

For high pressure hydrogen production, Texaco's gasification process has lower capital and utility costs, and has showed it can process H-Coal liquefaction vacuum tower bottoms, as well as ROSE-SR ash concentrate, successfully. (Reference: Texaco report DE-84-013199, February 1984). Therefore, the Texaco technology is recommended for this project as the gasification process for Plant 9.

FIGURE 13.1

Block Flow Diagram – Hydrogen Production by Coal Gasification

Scheme 1 – Texaco Gasification

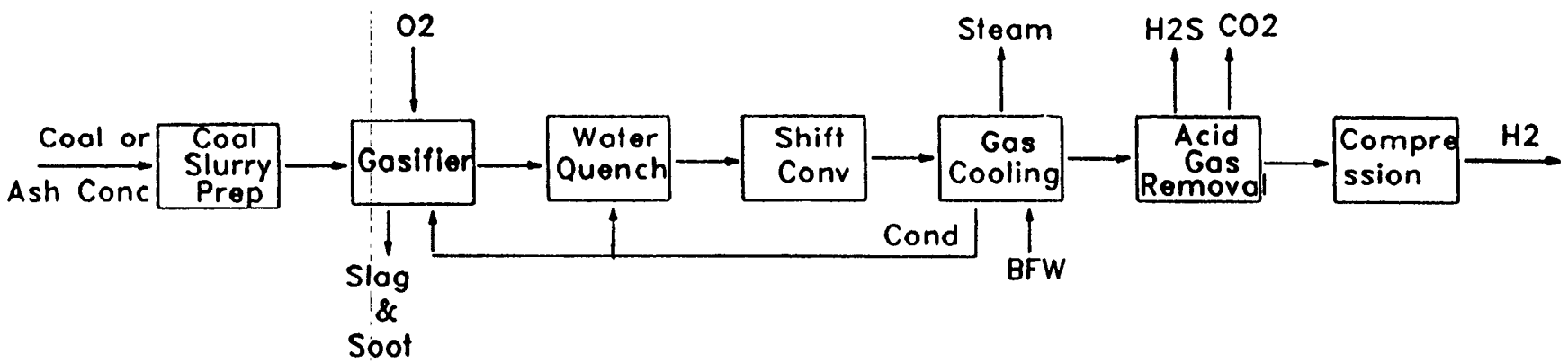

Scheme 2 – Shell Gasification

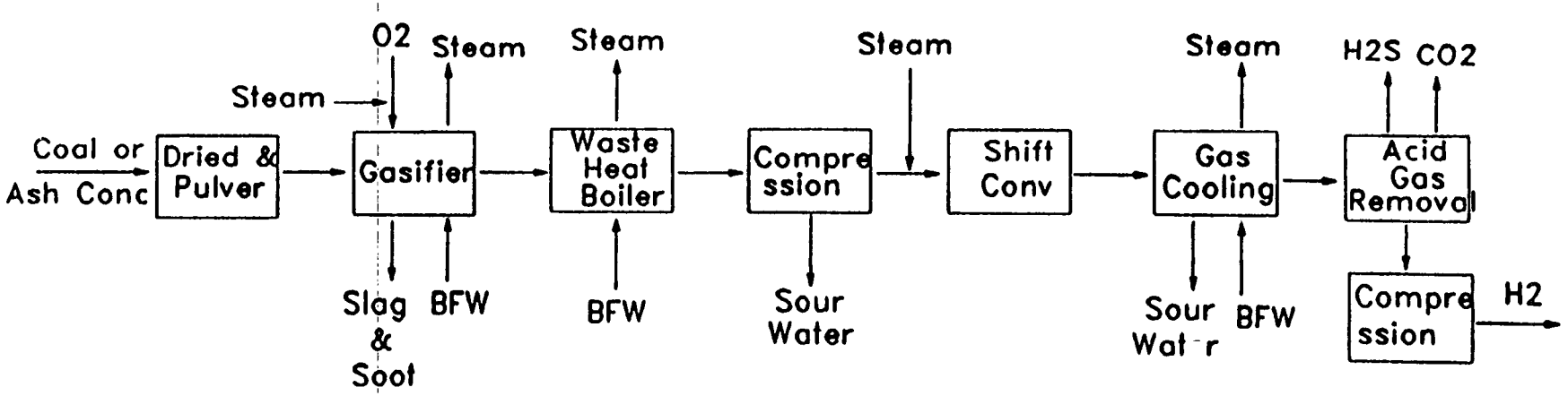

13.0.2 Design Consid rations

The limiting size for the gasifier reactors was taken as 2,200 TPD of coal or ash concentrate. This is larger than any reactors which have been designed and built to date; however, Texaco has stated that designing this size of gasifier is achievable.

The shift reaction was designed to maximize hydrogen production. The shift reactor vessels were limited in size to 16 feet outside diameter for shop fabrication and transportation considerations.

The RECTISOL process was chosen because it has been commercially proven in this service. The process can separate carbon dioxide from hydrogen sulfide as a relatively pure stream for venting to the atmosphere. The hydrogen sulfide is sent to the Sulfur Plant. PSA is required after RECTISOL to achieve the required hydrogen purity.

13.1 Process Description and Process Flow Diagram

Plant 9 consists of five trains of gasification, five trains of shift conversion and gas cooling, five trains of gas purification, and five trains of hydrogen compression. Process flow diagrams are presented on Flowsheets shown in Figures 13.2 through 13.4 as follows.

Fig. No.	Plant Name	Plant Section No.
13.2	Slurry Preparation and Gasification	9.1
13.3	Shift Reactor and Gas Cooling	9.2
13.4	Hydrogen Purification and Compression	9.3/9.4/9.5

Slurry Preparation and Gasification

Ash concentrate from Plant 8 (ROSE-SR) and coal from Plant 1 (Coal Cleaning and Handling) are fed with water and a special additive to a grinding mill. The slurry from the grinding mill discharges to a slurry run tank.

The slurry feed from slurry feed pumps and oxygen feed from the Plant 10 (Air Separation Plant) combine at the gasifier burner and enter the gasification chamber. This chamber operates at about 950 psig and 2500° F. About 92-95% of the carbon in the coal is converted to gaseous products, and the ash in the coal is slagged.

The gas with the molten slag is quenched in water at the bottom of the chamber. The slag is collected in a slag lock hopper connected to the base of the gasifier. Slag accumulations in the lock hopper are dumped into a sump. Slag dumped into the pit settles to the bottom. From the sump, the partly clarified soot slurry is pumped to a flash system to removed H_2S and other odorous material. The settled slag is dragged over the incline of the drag conveyor.

Synthesis gas leaving the gasifier is further cleaned in a water scrubber to remove the residual slag particles.

Water and condensate collected in the gas cooling system and in the soot water system are recycled to the scrubber.

The size of the gasifier is limited by economic considerations and experience factors. Seven gasifiers of the largest design are included in the base-line design, including two spares to ensure continuous operation at the design capacity.

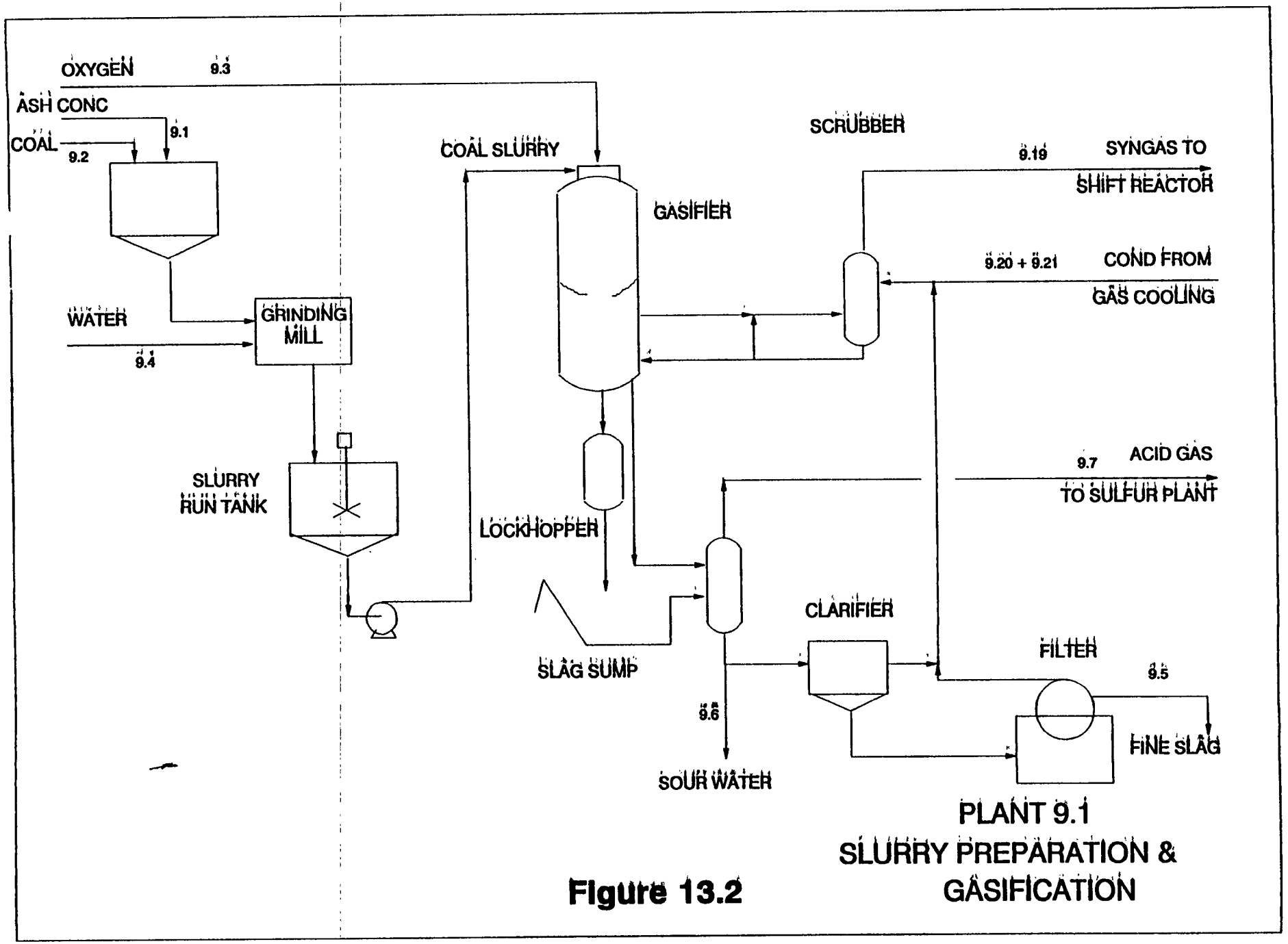
OXYGEN
9.3
ASH CONC
9.1
COAL
9.2
WATER
9.4
GRINDING MILL
SLURRY RUN TANK
COAL SLURRY
GASIFIER
SCRUBBER
9.19
SYNGAS TO SHIFT REACTOR
9.20 + 9.21
COND FROM GAS COOLING
9.7
ACID GAS TO SULFUR PLANT
LOCKHOPPER
SLAG SUMP
CLARIFIER
FILTER
9.5
FINE SLAG
9.6
SOUR WATER
PLANT 9.1
SLURRY PREPARATION & GASIFICATION

Figure 13.2

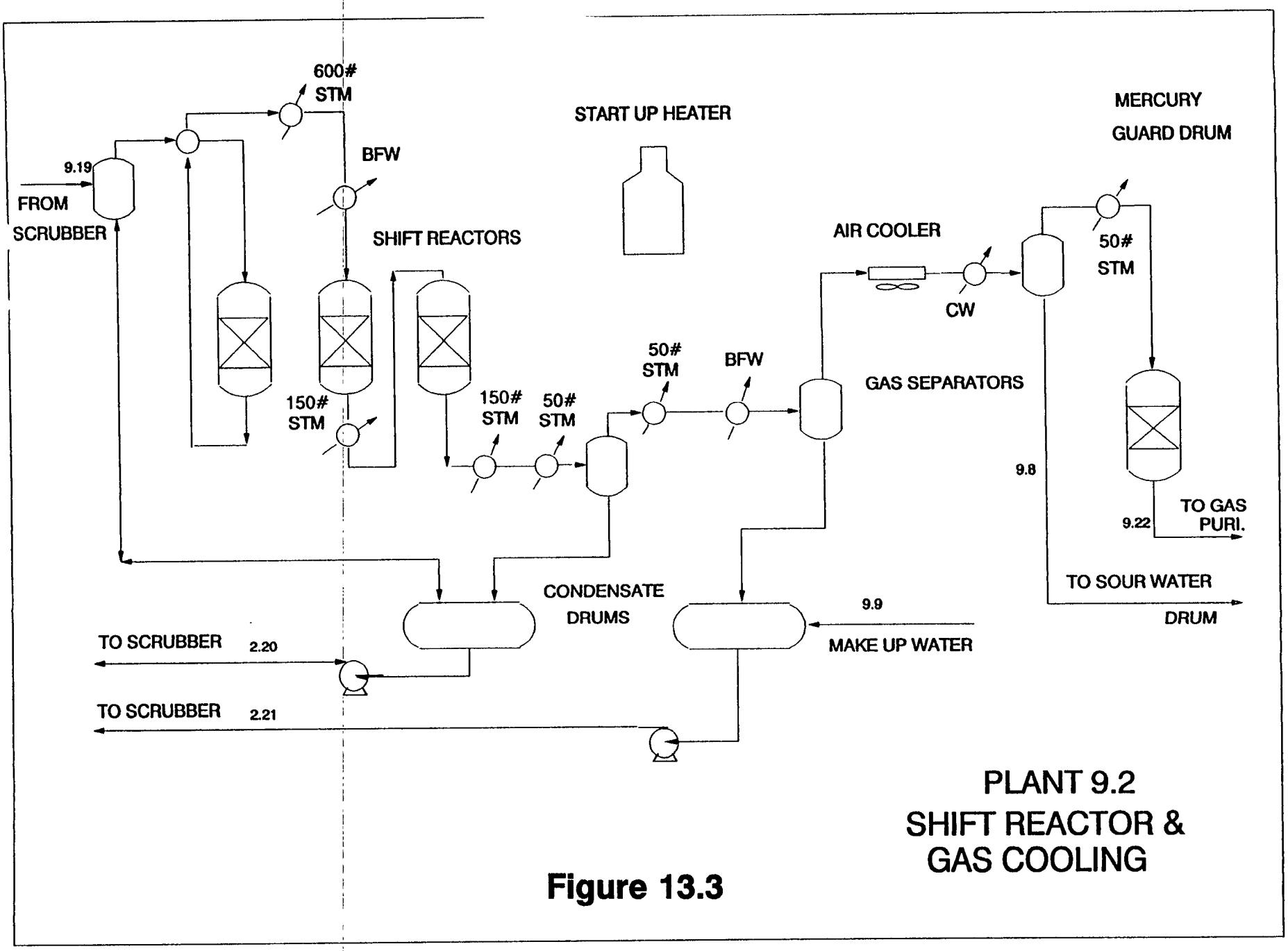

Figure 13.3

DOE2A

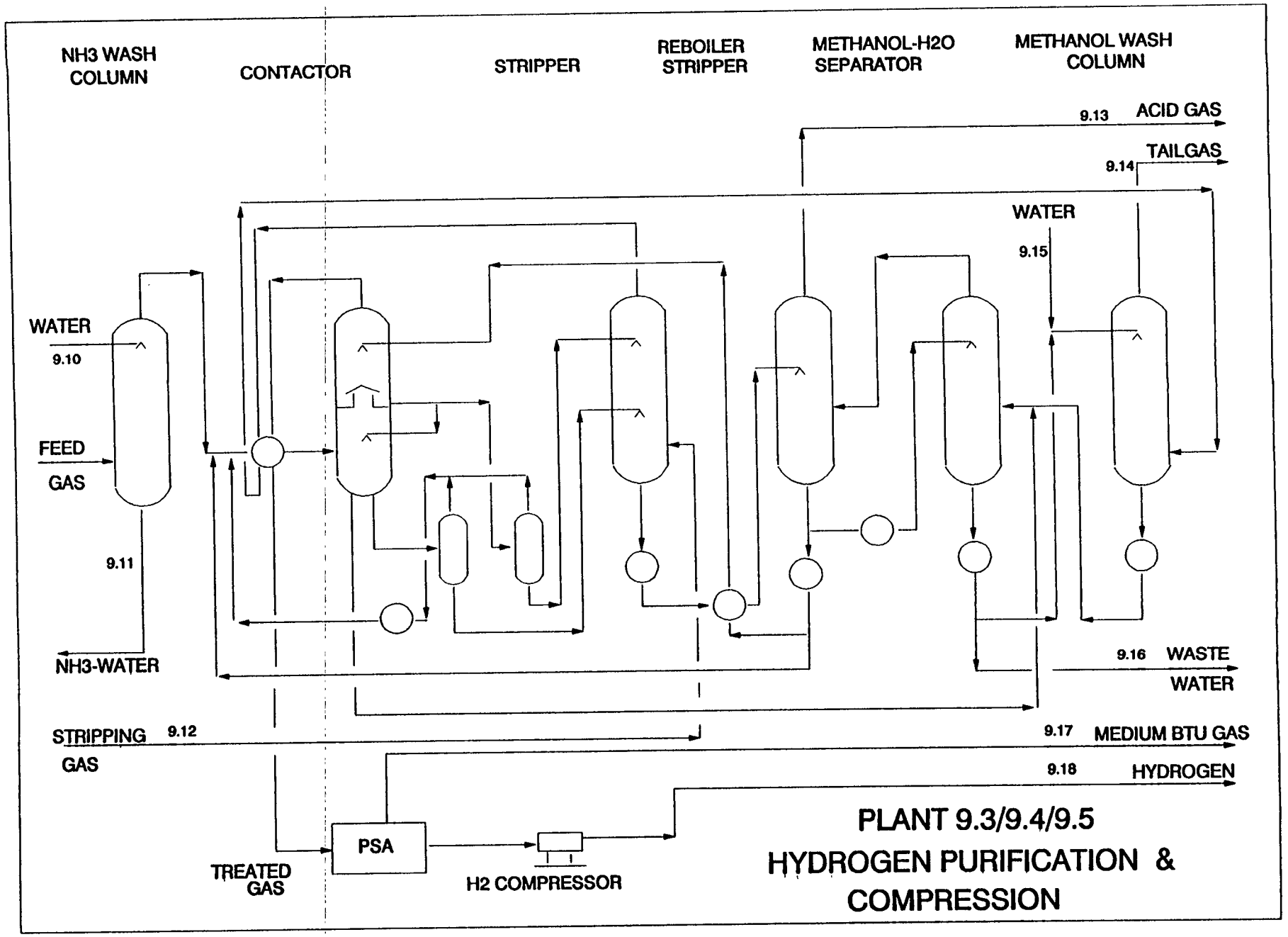

H2PURI.DRW

Figure 13.4

Shift Reactor and Gas Cooling

The clean syngas from the gas scrubber goes to the shift converter where about 97-98% of the carbon monoxide is converted to hydrogen. The shift reaction is highly exothermic. A high temperature favors fast reaction rates but results in unfavorable equilibrium conditions. Initial stages will be designed to achieve high reaction rates at the highest allowable outlet temperature. The maximum allowable outlet temperature must be below the catalyst sintering point and within the limits for practical vessel design. The last reactor temperatures are kept low to obtain the low CO level in the product gas. The inlet temperature to each reactor stage must be kept above the water dew point to avoid catalyst being deactivated in the presence of liquid water.

A system with a multiple reactor design has been developed with the number of stages and trains, and operating conditions being optimized for minimum cost. To accommodate the required capacity, five trains each with three reaction stages were needed as limited by maximum reactor vessel diameter.

The catalyst chosen is either BASF's K8-11 or Haldor Topsoe's type SSK. Both catalysts operate in the sulfide form, thereby permitting handling of sulfur-bearing gas.

The heat of reaction is removed by a steam generator producing 600 psig steam from the first stage, a steam generator producing 150 psig steam from the second stage, and steam generators producing 150 psig and 50 psig steam from the third stage.

The shifted gas is further cooled against boiler feedwater, air, and cooling water and flows to the Hydrogen Purification section for acid gas removal. Process condensate is separated in the hot and warm receivers and pumped to the gas scrubbing and quench sections of the plant.

Hydrogen Purification and Compression

The Rectisol process removes H_2S and CO_2 by physical absorption of acid gas in methanol at relatively low temperature.

The feed gas is first prewashed by water in a water wash tower to remove NH_3 in the gas stream. The feed gas then enters at the bottom of a two-stage contactor where it is contacted with the methanol solution. In the first stage some of the CO_2 and practically all of the H_2S and COS are removed. In the second stage, which is above the first stage, the bulk of the CO_2 is removed.

The rich solvent which contains acid gas is regenerated by pressure reduction in the flash drums. The rich solvent is withdrawn from the flash drums and enter a stripper where the bulk of the CO_2 is stripped from the rich solvent by using nitrogen as the stripping gas.

The methanol leaving the stripper is completely regenerated in a reboiler regeneration column. The lean methanol withdrawn from the bottom of this column is fed to the top of the two-stage contactor. The acid gas, which contains all of the H_2S in the feed gas and some CO_2, is stripped from this column and sent to sulfur plant.

The fully regenerated methanol from the bottom of the reboiler regeneration column contains all the water in the feed gas. To purge this water, a slip stream is charged to the methanol-water separator column where dry methanol is driven overhead. The overhead vapor is fed to the H_2S stripper. The bottoms from the methanol-water separator is water. A part of this stream is cooled and used for washing traces of methanol vapor from the tail gas (CO_2) stream. The balance is waste water.

The treated gas from the two-stage contactor flows to a pressure swing adsorption unit where the hydrogen is upgraded to a purity of 99 Mol %. The hydrogen is then compressed and delivered to the coal liquefaction and hydrotreating plants.

13.2. Material Balance

The detailed material balance for the plant is shown in Table 13.3. The overall material balance is shown in Figure 13.5.

Table 13.3

PLANT 9 : INPUT

Stream No.	9.1	9.2	9.3			9.12		
Components (Lb/Hr)	PL-8 Ash Concen	Clean (1) Coal	PL-10 Oxygen	PL-38 Water	Make Up Water	Strip Gas	Reaction Delta	Total Input
H2O		216,447		459,870	512,575		(726,733)	1,188,892
H2S				2			8,031	2
COS							29	
NH3				36			469	36
CO							24,790	
CO2				17			2,045,501	17
H2							117,778	
N2			3,231			109,266	(387)	112,497
O2			734,890				(734,890)	734,890
C1				1			8,712	1
Organics				5				5
Phenolics				1,104				1,104
850+	99,848						(99,848)	99,848
Coal-UC	102,340						(102,340)	102,340
Coal-Clean		548,340					(548,340)	548,340
Ash	94,128	36,868						130,996
Slag							7,228	
Total, PPH	296,316	801,655	738,121	461,035	512,575	109,266	0	2,918,968
Liquid-GPM	----	----	----	941	1,025	----		----
Solids-TPD,MF	3,556	7,022	8,857	----	----	----		----

PLANT 9 : OUTPUT

Stream No.	9.18	9.17	9.13	9.14		9.5		
Components (Lb/Hr)	Hydrogen Product	Med BTU Fuel Gas	Acid Gas to PL-11	Tail Gas to Atm	Sour Water	Slag		Total Output
H2O			227	13,763	448,169			462,159
H2S			7,951	2	80			8,033
COS			29					29
NH3			3		502			505
CO		21,597	1,987	1,206				24,790
CO2		11,365	91,887	1,935,963	6,303			2,045,518
H2	98,273	18,898	181	420	6			117,778
N2	13,792	14,540	1,238	82,540				112,110
O2								
C1		7,989	3	720	1			8,713
Organics					5			5
Phenolics					1104			1,104
850+								
Coal-UC								
Coal-Clean								
Ash						130,996		130,996
Slag						7,228		7,228
Total, PPH	112,065	74,389	103,506	2,034,614	456,170	138,224		2,918,968
Liquid-GPM	----	----	----	----	931	----		----
Solids-TPD,MF	----	----	----	----	----	1,659		----
Gas-MMSCFD	452	105	23	437	----	----		----

Note 1 : 27% Moisture in ROM Black Thunder Coal (Ref: Burns & Roe, Sept 14,93).

LOW RANK COAL

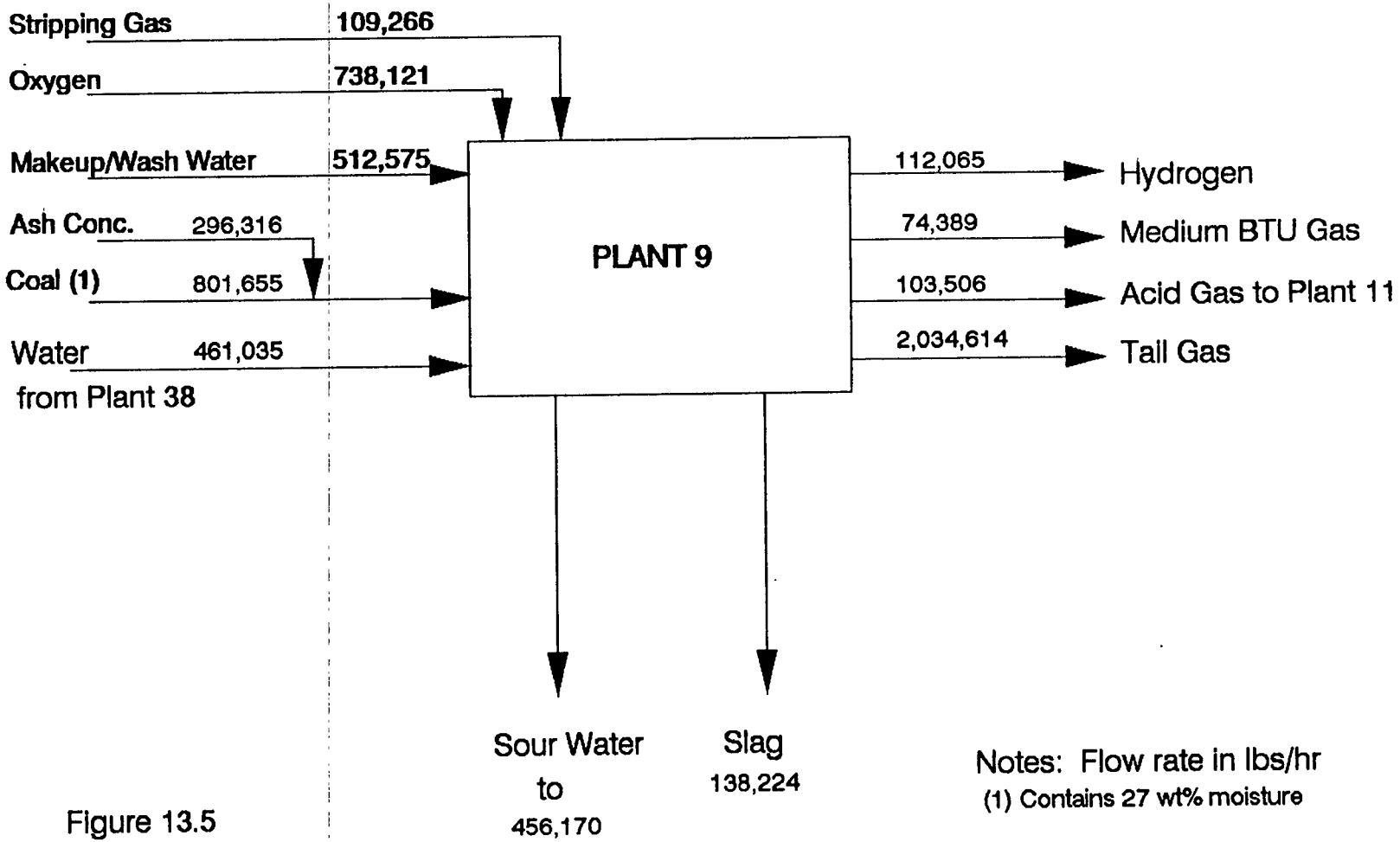

Notes: Flow rate in lbs/hr
(1) Contains 27 wt% moisture

Figure 13.5

OVERALL MATERIAL BALANCE

LRCOVMB.DRW 10/93

13.3 Major Equipment List

The major equipment for this plant is listed in Table 13.4.

Tabl 13.4

EQUIPMENT LIST

PLANT 9 — COAL GASIFICATION & SHIFT CONVERSION

REACTORS AND VESSELS

Equipment No.	Equipment Description
9.1–C101	Gasifier
9.1–C102	Slag Lock Hopper
9.1–C103	Gas Scrubber
9.2–C104	No.1 Gas Separator
9.2–C105	First Stage Shift Reactor
9.2–C106	Second Stage Shift Reactor
9.2–C107	No.2 Gas Separator
9.2–C108	No.3 Gas Separator
9.2–C109	Third Stage Shift Reactor
9.2–C110	Final Gas Separator
9.2–C111	Mercury Guard Drum
9.1–C112	Flash Condensate Separator
9.2–C113	Hot Condensate Drum
9.2–C114	Warm Condensate Drum
9.1–C115	Soot Slurry Flash Drum
9.1–C116	Vacuum Pump Separator
9.1–C118	Vacuum Flash Drum
9.1–C119	Filtrate Receiver
9.1–C121	Blowdown Drum
9.1–C123	Burner CW Gas Separator
9.1–C124	Flash Water Drum
9.1–D101	Mill Discharge Tank w/Mixer
9.1–D102	Additive Storage Tank
9.1–D103	Water Supply Tank
9.1–D104	Slurry Run Tank w/Mixer
9.1–D105	Gray Water Tank
9.1–D106	Filter Feed Tank w/Mixer
9.1–D107	Burner Cooling Water Tank
9.1–D108	Vent Scrubber Tank

Table 13.4 Equipment List - continued

Towers

Equipment No.	Equipment Description
9.1-C117	Flash Gas Quencher
9.1-D120	Vent Air Separator
9.1-D122	Vent Air Quencher

Heat Exchangers

Equipment No.	Equipment Description
9.1-E101	Mill Water Heater
9.1-E102	Flash water Cooler
9.1-E103	Make up Water Cooler
9.1-E104	Burner CW Cooler
9.2-E105	Shift Reactor Preheater
9.2-E106	No.1 Steam Generator
9.2-E107	No.2 Steam Generator
9.2-E108	No.5 Steam Generator
9.2-E109	No.5 Gas Cooler
9.2-E110	Shift Gas Air Cooler
9.2-E111	Gas Final Cooler
9.2-E112	Hg Guard Preheater
9.2-E113	No.4 Steam Generat
9.1-E114	Soot Slurry Steam Generator
9.1-E115	Soot Slurry Cooler
9.1-E116	Flash Gas Cooler
9.1-E117	Gray Water Preheater
9.1-E118	Flash Quench Cooler
9.1-E119	Vent Air Quench Cooler
9.1-E120	Steam Blowdown Cooler
9.2-E121	Shift Gas Cooler
9.2-E122	No.3 Steam Generator

Table 13.4 Equipment List - continued

Pumps

Equipment No.	Equipment Description
9.1-G101	Mill Slurry Pump
9.1-G102	Slurry Feed Pump
9.1-G103	Gas Scrubber Circulation Pump
9.2-G104	Hot Condensate Pump
9.2-G105	Warm Condensate Pump
9.2-G106	Gray Water Pump
9.1-G107	Soot Slurry Pump
9.1-G108	Gray Water Charge Pump
9.1-G109	Slag Fine Pump
9.1-G110	Gray Water Feed
9.1-G111	Flash Water Supply Pump
9.1-G112	Flash Condensate Pump
9.1-G113	Filter Feed Pump
9.1-G114	Gray Water Purge Pump
9.1-G115	Water Supply Pump
9.1-G116	Additive Transfer Pump
9.1-G117	Slag Sump Pump
9.1-G118	Slag Quench Circulation Pump
9.1-G119	Air Quencher Circulation Pump
9.1-G120	Air Scrubber Circulation Pump
9.1-G121	Burner Cooling Pump

Vacuum Pumps

Equipment No.	Equipment Description
9.1-H101	Vacuum Pump
9.1-H102	Filter Vacuum Pump

Air Blowers

Equipment No.	Equipment Description
9.1-K101	Cake Blower
9.1-K102	Vent Air Blower

Tabl 13.4 Equipment List - continued

Fired heaters

Equipment No.	Equipment Description
9.1-F101	Shift Reactor Start Up Heater

Miscellaneous

Equipment No.	Equipment Description
9.1-T101	Slag Sump Conveyor
9.1-Y101	Rod Mill w/Trommel
9.1-Y102	Start Up Ejector
9.1-Y103	Gas Scrubber Ejector
9.1-Y104	Clarifier
9.1-Y105	Soot Filter
9.1-Y106	Coal Slurry Screen

13.4 Utility Summary

Table 13.5 below presents a summary of the utilities required for Plant 9.

Table 13.5

PLANT 9 UTILITY SUMMARY

Utility	Gasification & Shift Conversion	Hydrogen Purification	Hydrog n Compression
Steam, lb/hr			
600 psig	-291,800	0	0
150 psig	-812,900	57,000	0
50 psig	-894,300	128,800	0
Boiler Feedwater, gpm	4,000	0	0
Cooling Water, gpm	33,900	12,000	9,350
Raw Water, gpm	1,118	89	0
Fuel Gas, MMSCFD	* 0.62	0	0
Electricity, Kw	14,660	6,700	48,620
Nitrogen, MMSCFD	0	39	0

Note: Negative values represent utility production.

* This is equivalent to 26 MM Btu/hr as the net consumption by this plant.

13.5 Water Summary

Table 13.6 below presents the water balances for the Hydrogen Production Plant (Coal Gasification - Texaco Process).

Table 13.6

WATER SUMMARY

	GPM Inlet	GPM Outlet
Plant 9.1/9.2		
Slurry Preparation	931	
Makeup Water	968	
Sour Water to Plt 38		879
Plant 9.3		
Wash Water	67	
Waste Water to Plt 38		52
TOTAL	1,966	931