U.S. DEPARTMENT OF ENERGY
PITTSBURGH ENERGY TECHNOLOGY CENTER

DIRECT COAL LIQUEFACTION BASELINE DESIGN AND SYSTEM ANALYSIS

CONTRACT NO. DEAC22 90PC89857

FINAL REPORT ON BASELINE AND IMPROVED BASELINE

VOLUME VIII

DESIGN, CAPITAL COST AND ECONOMICS FOR IMPROVED BASELINE

AMOCO

BECHTEL

MARCH 1993

PITTSBURGH, PENNSYLVANIA

Final Report Volumes
Baseline and Improved Baseline

Volume No.	Title
I	Project Management Plan
IIA	Baseline Design
IIB	Baseline Design Continued
III	Options to Baseline Design
IV	Capital Cost and Economics for Baseline
V	Algorithms for Equipment Sizing, Costing and Train Duplication
VI	Process Simulation Model for the Baseline, Improved Baseline and Options
VII	Process Simulation Model Training Manual
VIII	Design, Capital Cost and Economics for Improved Baseline

Bechtel

3000 Post Oak Boulevard
Houston, Texas 77056-6503
Mailing address: P.O. Box 2166
Houston, Texas 77252-2166

March 18, 1993

U. S. Department of Energy
Pittsburgh Energy Technology Center
Mail Stop 922-H
P. O. Box 10940
Pittsburgh, PA 15236

Attention: Mr. Swenam Lee
Project Manager

Subject: D.O.E. Coal Liquefaction
Base Line Design and System Analysis
Contract No. DE-AC22 90PC89857
Bechtel Job No. 20952
Final Report on Study
Letter No. BLD-138

Dear Mr. Lee:

Enclosed are two copies of Volume VIII of the subject multi-volume final report. The final report is published in nine volumes plus an executive summary. As requested, the remaining third copy of this nine volume report will be sent to you in 3-ring binders for your desk use. Copies to the other members of DOE, as requested by the contract, are sent directly to each of them.

Sincerely yours,

Syamal K. Poddar
Project Manger

SKP:tr
Enclosure

cc: Martin Byrnes, DOE/PETC
Robert Hamilton, DOE/PETC
A. Schachtschneider, AMOCO
File
Gilbert V. McGurl, DOE/PETC
Joanne Wastek, DOE/PETC

U.S. DEPARTMENT OF ENERGY
PITTSBURGH ENERGY TECHNOLOGY CENTER

DIRECT COAL LIQUEFACTION BASELINE DESIGN AND SYSTEM ANALYSIS

CONTRACT NO. DEAC22 90PC89857

FINAL REPORT ON BASELINE AND IMPROVED BASELINE

VOLUME VIII

DESIGN, CAPITAL COST AND ECONOMICS FOR IMPROVED BASELINE

MARCH 1993

PITTSBURGH, PENNSYLVANIA

The information and data contained in this report are the result of an ecomonic evaluation and a preliminary design effort and because of the nature of this work no guarantees or warranties of performance, workmanship, or otherwise are made, either expressed or by implication.

TABLE OF CONTENTS

TABLE OF CONTENTS

VOLUME VIII

IMPROVED BASELINE AND NATURAL GAS REFORMING OPTION

		PAGE
1.	**Overall Design Bases, Criteria and Considerations**	1-1
2.	**Overall Plant Configuration**	2-1
3.	**Overall Material and Utilities Balances**	3-1
4.	**Overall Flow Distributions**	4-1
	4.1 Hydrogen	
	4.2 Water	
5.	**Plant 2 (Coal Liquefaction)**	5-1
	5.1 Design Basis, Criteria and Considerations	
	5.2 Process Description	
	5.3 Material Balance	
	5.4 Utility Summary	
	5.5 Water Summary	
	5.6 Catalyst and Chemical Summary	
	5.7 Operating Manpower Requirements	
	5.8 Major Equipment Summary	
	5.9 Capital Cost Breakdowns	
6.	**Plant 3 (Gas Plant)**	6-1
	6.1 Design Basis, Criteria and Considerations	
	6.2 Process Description	
	6.3 Material Balance	
	6.4 Utility Summary	
	6.5 Water Summary	
	6.6 Catalyst and Chemical Summary	
	6.7 Operating Manpower Requirements	
	6.8 Major Equipment Summary	
	6.9 Capital Cost Breakdowns	

VOLUME VIII - continued

7. Plant 4 (Naphtha Hydrotreater) **7-1**

7.1 Design Basis, Criteria and Considerations
7.2 Process Description
7.3 Material Balance
7.4 Utility Summary
7.5 Water Summary
7.6 Catalyst and Chemical Summary
7.7 Operating Manpower Requirements
7.8 Major Equipment Summary
7.9 Capital Cost Breakdowns

8. Plant 5 (Gas Oil Hydrotreater) **8-1**

8.1 Design Basis, Criteria and Considerations
8.2 Process Description
8.3 Material Balance
8.4 Utility Summary
8.5 Water Summary
8.6 Catalyst and Chemical Summary
8.7 Operating Manpower Requirements
8.8 Major Equipment Summary
8.9 Capital Cost Breakdowns

9. Overall Capital Costs for Improved Baseline **9-1**

9.1 ISBL Plant Field Cost Summaries
9.2 OSBL Plant Field Cost Summaries
9.3 Installed Plant Costs

10. Option 6 (Steam Reforming of Natural Gas Plus FBC Unit for Hydrogen Production) **10-1**

10.1 Design Basis, Criteria and Considerations
10.2 Process Description and Process Flow Diagram for the Directly Affected Plants
10.3 Material Balance for the Directly Affected Plants
10.4 Utility Balance for the Directly Affected Plants
10.5 Overall Capital Costs

VOLUME VIII - continued

10.6 Overall Impact

10.6.1 Overall Plant Configuration and Material Balance
10.6.2 Overall Utility Summary
10.6.3 Overall Hydrogen Flow Distribution
10.6.4 Overall Water Flow Distribution

11. ASPEN/SP Process Simulation Model of the Improved Baseline and Option 6 (Steam Reforming of Natural Gas plus FBC Unit for Hydrogen Production) 11-1

11.1 General Description
11.2 Comparison of Model Predictions with Improved Baseline Design
11.3 Comparison of Model Predictions with Improved Baseline plus Hydrogen Production by Steam Reforming of Natural Gas
11.4 ASPEN/SP Kinetic Reactor Modeling of the Improved Baseline Design

12. Overall Raw Material, Catalyst and Chemical Costs 12-1

13. Product Valuation 13-1

14. Overall Utility Unit Prices and Consumptions 14-1

15. Overall Labor Requirements and Rates 15-1

15.1 Staffing Plan

15.1.1 Improved Baseline
15.1.2 Improved Baseline Plus Option 6

15.2 Base Wages and Salaries

16. Overall Product / By-product Values 16-1

17. Economics 17-1

17.1 Key Assumptions
17.2 Results
17.3 Sensitivies on Economics

VOLUME VIII - continued

18. Discussion **18-1**

Appendix A ASPEN/SP Process Simulation Model Input File for the Improved Baseline Design Case A-1

Appendix B ASPEN/SP Process Simulation Model Input File for the Kinetic Reactor Model Simulation of the Improved Baseline Design B-1

LIST OF FIGURES

NUMBER	TITLE	PAGE
2.1	Overall Plant Configuration	2-2
3.1	Overall Material Balance for Improved Baseline	3-2
4.1	Overall Hydrogen Flow Distribution	4-2
4.2	Overall Water Flow Distribution	4-3
5.1	Improved Baseline Design Scheme	5-8
5.2	Slurry Preparation/Reaction	5-12
5.3	Primary Separation	5-15
5.4	Fractionation	5-16
5.5	Improved Baseline Material Balance (Per Train)	5-19
6.1	Process Flow Diagram for Gas Plant (Plant 3)	6-4
6.2	Process Flow Diagram for Merox Unit (Plant 3)	6-5
7.1	Process Flow Diagram for Naphtha Hydrotreater (Plant 4)	7-3
8.1	Process Flow Diagram for Gas Oil Hydrotreater (Plant 5)	8-5
10.1	Process Flow Diagram of Steam Reformer for Natural Gas	10-3
10.2	Process Flow Diagram for Fluidized Bed Combustor	10-4
10.3	Process Flow Diagram of Steam Turbine Generator	10-6
10.4	Material Balance per Train, Improved Baseline Plus Hydrogen by Natural Gas Reforming Option	10-10
10.5	Overall Plant Configuration and Overall Material Balance, Improved Baseline with H2 Production by Natural Gas Reforming Option	10-17
10.6	Overall Water Flow Distribution, Improved Baseline with H2 Production by Natural Gas Reforming Option	10-19

10.7 Overall Hydrogen Flow Distribution, Improved Baseline with H2 Production by Natural Gas Reforming Option 10-20

11.1 ASPEN/SP Block Flow Diagram of the Process Simulation Model for the Improved Baseline Design 11-2

15.1 Overall Plant Organization 15-2
15.2 Laboratory Organization and Personnel 15-3
15.3 Operations Organization and Personnel 15-4
15.4 Engineering Organization and Personnel 15-5
15.5 Environment, Health, Safety and Security Organization and Personnel 15-6
15.6 Administrative Organization and Personnel 15-7
15.7 Maintenance Organization and Personnel 15-8
15.8 Operations Organization and Personnel for Improved Baseline Plus Option 6 15-9

LIST OF TABLES

	TITLE	PAGE
2.1	ISBL Plants	2-3
2.2	OSBL Plants	2-4
3.1	Overall Utility Balance for Improved Baseline	3-3
5.1	Analysis of Feed Coal to Liquefaction Illinois No. 6 (Burning Star Mine)	5-2
5.2	Key Operating Conditions for Coal Liquefaction Reactor	5-3
5.3	Overall Liquefaction Product Yields	5-4
5.4	Primary Liquefaction Yield & Elemental Balance Data Improved Baseline Design Case	5-5
5.5	Stage I Yields: Original Baseline And Improved Baseline Designs	5-6
5.6	API Gravity of Various Fractions	5-6
5.7	Recycle Gas Flow Rates for the Improved Baseline Design	5-7
5.8	Comparative Design Data: Improved Baseline vs. Baseline Designs	5-9
5.9	Material Balance per train, Plant 2	5-18
5.10	Plant 2 Utility Summary (per train),	5-20
5.11	Water Summary (per train), Plant 2	5-21
5.12	Major Equipment Summary, Plant 2	5-23
5.13	Field Costs and Breakdowns for Coal Liquefaction, Plant 2	5-29
6.1	Material Balance, Plant 3	6-7
6.2	Utility Summary, Plant 3	6-8
6.3	Major Equipment Summary, Plant 3	6-9
6.4	Field Costs and Breakdowns for Gas Plant, Plant 3	6-11
7.1	Naphtha Hydrotreater Product Characteristics	7-1
7.2	Material Balance, Plant 4	7-5

VOLUME VIII - continued

7.3 Utility Summary, Plant 4 7-6
7.4 Water Summary, Plant 4 7-6
7.5 Major Equipment Summary, Plant 4 7-8
7.6 Field Costs and Breakdowns for Naphtha Hydrotreater, Plant 4 . . . 7-11

8.1 Feeds to the Gas Oil Hydrotreater 8-1
8.2 Products from the Gas Oil Hydrotreater 8-2
8.3 Material Balance, Plant 5 8-6
8.4 Utility Summary, Plant 5 8-7
8.5 Water Summary, Plant 5 8-7
8.6 Major Equipment Summary, Plant 5 8-9
8.7 Field Costs and Breakdowns for Gas Oil Hydrotreater, Plant 5 8-12

9.1 Improved Baseline Estimated Total Field Costs
for Coal Liquefaction Complex - Process Units (ISBL) 9-2

9.2 Improved baseline Estimated Total Field Costs
for Coal Liquefaction Complex - Offsites/Utilities (OSBL) 9-4

9.3 Nth Plant Capital Costs for the Complex, Improved Baseline 9-6

10.1 Improved Baseline Plus Option 6
Overall Material Balance for Plant 9.01 10-7

10.2 Improved Baseline Plus Option 6
Overall Material Balance for Plant 31.1 & 31.4 10-8

10.3 Overall Material Balance for Plant 2 10-9

10.4 Overall Material Balance for Plant 3 10-11
10.5 Overall Material Balance for Plant 4 10-12
10.6 Overall Material Balance for Plant 5 10-13

10.7 Utility Requirement for Plant 9-01,
Improved Baseline Plus Option 6 10-14

10.8 Nth Plant Capital Costs for the Complex,
Improved Baseline with H2 Produced by Natural Gas Reforming . 10-15

VOLUME VIII - continued

10.9 Overall Utility Balance for Improved Baseline with H2 Production by Natural Gas Reforming Option 10-18

11.1 Comparison of the ASPEN/SP Process Simulation Model with the Process Design for the Improved Baseline Case 11-4

11.2 Comparison of the ASPEN/SP Process Simulation Model with the Process Design for the Improved Baseline Case with Hydrogen Production by Steam Reforming of Natural Gas Option 11-6

11.3 Kinetic Model: Key Results for the Improved Baseline Design 11-8

12.1 Catalysts and Chemicals Cost 12-1

14.1 Raw Material and Utility Pricing 14-1
14.2 Overall Utility Consumptions 14-1

15.1 Base Wages and Salaries 15-10

16.1 By-product Value 16-1

17.1 Economic Analysis of Improved Baseline Case 17-2
17.2 Economic Analysis of Improved Baseline Case with the Best Option 17-5
17.3 Economic Results and Sensitivities 17-8

1. OVERALL DESIGN BASIS, CRITERIA AND CONSIDERATIONS

1. Overall Design Basis, Crit ria and Considerations

In general, the design bases, criteria and considerations for the improved baseline case are similar to the baseline case. Also, the plant numbering methodology and the number of plants are the same as they are for the baseline design case.

2. OVERALL PLANT CONFIGURATION

2. Overall Plant Configuration

The overall plant configuration for the improved baseline is the same as the baseline case. The configuration of the entire liquefaction complex is shown in Figure 2.1. The overall configuration shows the interconnection of the primary process plants. Besides these plants, there are a number of additional Outside Battery Limit (OSBL) plants which are not shown in this figure. The complete list of these ISBL and OSBL plants is given in Table 2.1 and 2.2.

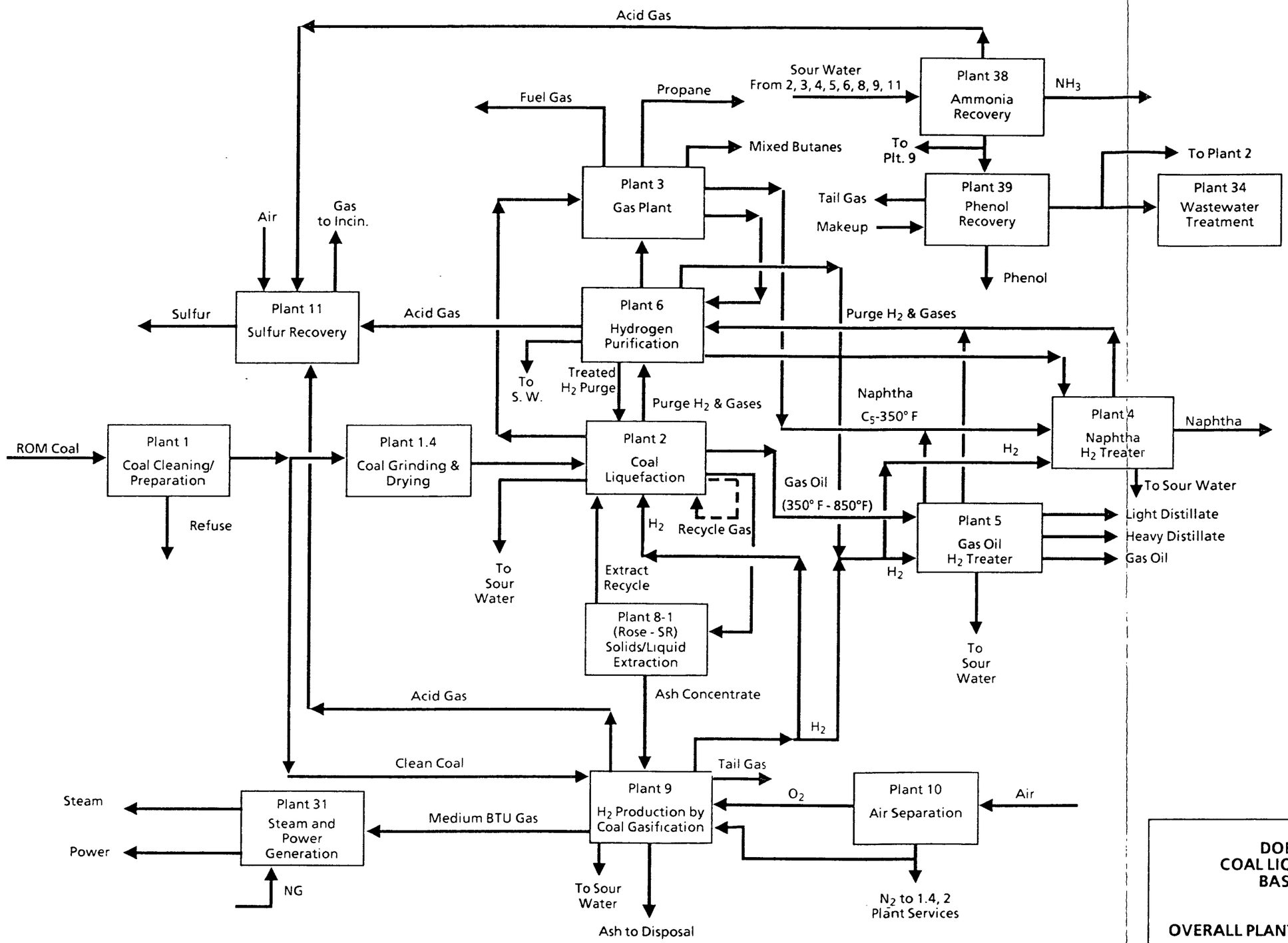

0891016-6

DOE / PETC
COAL LIQUEFACTION
BASE CASE

OVERALL PLANT CONFIGURATION

Figure 2.1

Table 2.1

ISBL PLANTS

ISBL Plant No.	ISBL PLANTS
1	Coal Cleaning and Preparation (Jigging)
2	Two Stage Coal Liquefaction
3	Gas Plant
4	Naphtha Hydrotreater
5	Gas Oil Hydrotreater
6	Hydrogen Purification
7	OPEN
8	Critical Solvent Deashing Unit
9	Hydrogen Production By Coal Gasification
9-01	Hydrogen Production Option (Hydrogen Production By Natural Gas Reforming)
10	Air Separation
11	By-Product Sulfur Recovery Unit

Table 2.2

OSBL PLANTS

OSBL Plant No.	OSBL Plants
19	Relief and Blowdown
20	Tankage
21	Interconnecting Piping Systems
22	Product Shipping
23	Tank Car/Tank Truck Loading
24	Coal Refuse and Ash Disposal
25	Catalyst and Chemical Handling
26 - 29	OPEN
30	Electrical Distribution System
31	Steam and Power Generation (Co-generation)
31-01	Fluidized Bed Combustor/Steam Turbine Generator
32	Raw, Cooling and Potable Water Systems
33	Fire Protection Systems
34	Waste Water Treatment Systems
35	Instrument & Plant Air Systems
36	Purge and Flush Oil System
37	Solid Waste Management
38	Ammonia Recovery
39	Phenol Recovery
40	General Site Systems
41	Buildings
42	Telecommunications Systems

3. OVERALL MATERIAL AND UTILITY BALANCES

3. Overall Material and Utility Balances

This section is divided into the following two subsections:

3.1 Material Balance
3.2 Utility Balance

3.1 Overall Material Balance

The overall material balance for the improved baseline coal liquefaction complex is shown in Figure 3.1. The flow rates are in Mlb/hr and on dry basis unless otherwise noted. Exceptions are plants 34, 38 and 39 where the material balances for these plants are shown on a wet basis. To keep the figure simple, minor streams such as steam, sour water and make-up amine are not shown.

3.2 Overall Utility Balance

The overall utility balance for the improved baseline coal liquefaction complex is shown in Table 3.1. Because the utility consumptions for plants 23, 24 and 25 are small and intermittent, they are not included in this table.

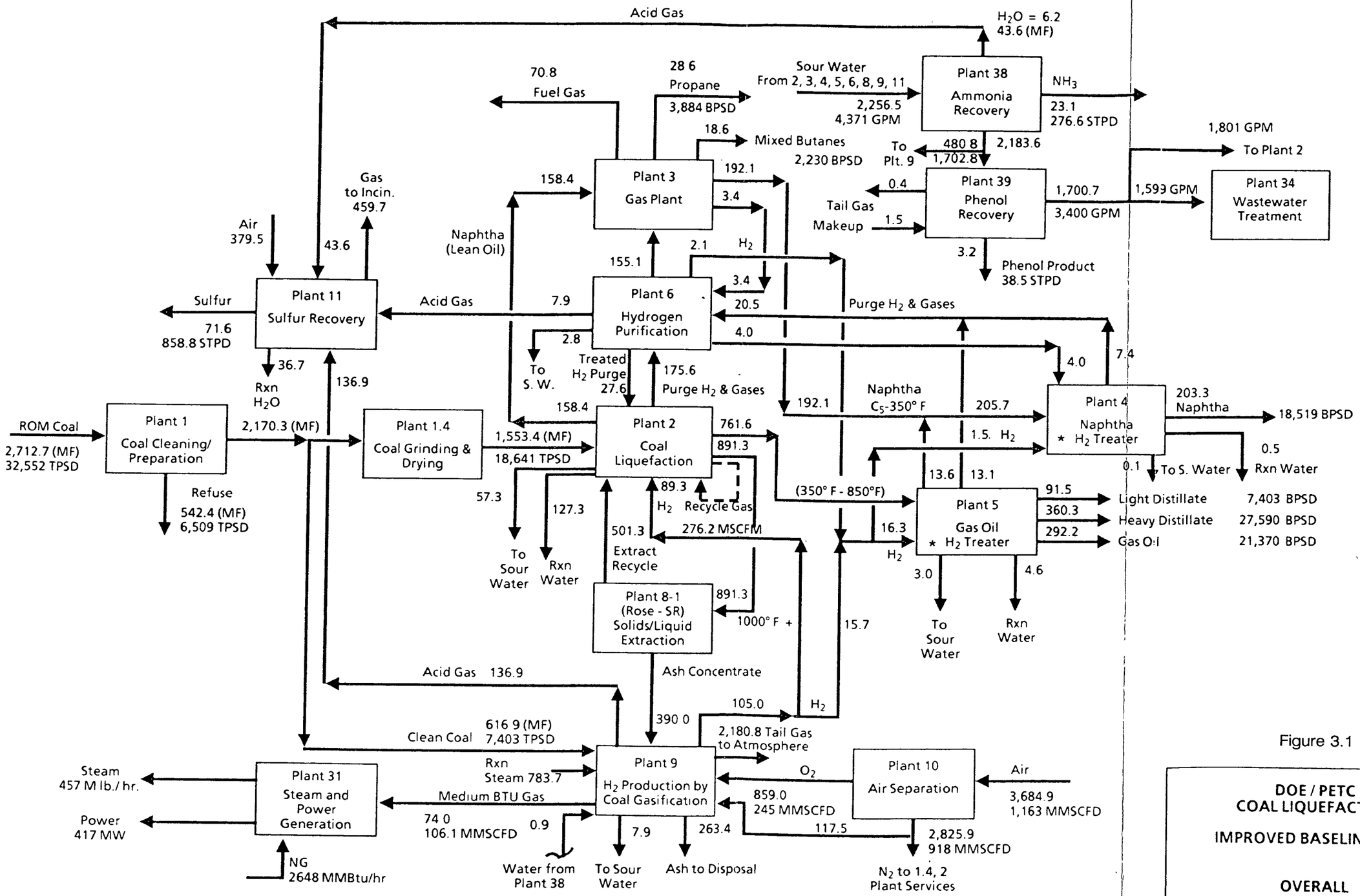

Notes:

1. Flow rates are in MLB/HR unless noted and on dry basis
2. Minor streams including steam, water, sour water, and make-up amine are not shown on this diagram
3. Flow rates around plants #38, 39, 34 are shown on wet basis

* H2 Treater = Hydrotreater

0992094-1

Figure 3.1

DOE / PETC
COAL LIQUEFACTION

IMPROVED BASELINE CASE

OVERALL MATERIAL BALANCE

Table 3.1

OVERALL UTILITY BALANCE FOR IMPROVED BASELINE

12-Feb-93

Plant No.	PLANT NAME	Fuel Gas MMbtu/hr	Electric Power KW	Steam Psig, Lb/hr 600 Sup @720 F	600 @489 F	150 @366 F	50 @298 F	Cond/BFW Net Cons lb/hr	Cooling Water gpm	Sour Water gpm	Waste Water gpm	Makeup Water gpm	Air scfm	Nitrogen scfm
	PROCESSING UNITS													
1	Coal Cleaning and Handling		9,293								880			
1.4	Coal Grinding and Drying	530	13,204						262				6,492	81,819
2	Coal Liquefaction	1,129	59,162	6,068	(162,508)	(98,203)	176,362	462,939	8,824	(2,871)				779
3	Gas Plant	(1,504)	502		279,468		15,096	(294,564)	9,784	2				
4	Naphtha Hydrotreater	71	1,198		90,386			(90,386)	7,080	(38)		(37)		
5	Gas Oil Hydrotreater	335	2,147		62,030	(104,578)		47,548	330	(99)		(81)		
6	Hydrogen Purification		28,859			71,944	2,483	(74,427)	6,438	(101)		(84)		
8	Critical Solvent Deashing	208	4,286			24,969				(50)				
9	H2 Production by Coal Gasification	(1,112)	71,739		(331,175)	(865,844)	(886,727)	2,083,746	59,698	(1,117)	95	(1,644)		26,552
10	Air Separation		184,037											(638,630)
11	By-product Sulfur Recovery	80	3,550		69,520	(216,298)	63,157	83,621	9,422	(93)				
ALL	Common Users			73000		40000	90000	(193,000)				(532)	8508	
	Sub Total (Process)	(263)	377,977	79,068	7,721	(1,148,010)	(539,629)	2,025,477	101,838	(4,367)	975	(2,378)	15,000	(529,480)
	OFFSITES													
19	Relief and Blowdown		19											
20	Tankage		6,758			22,000	3,300	(25,300)	100					
30	Electrical Distribution													
31	Steam and Power Generation	3,760	(416,926)	(456,824)		439,435	460,436	(867,674)	69,086		(359)	(1,208)		
32	Raw, Cooling and Potable Water Systems		14,078						(263,502)		(482)	11,710		
33	Fire Protection		44											
34	Sewage & Effluent Treatment		7,313				3,000	(3,000)				(482)		
35	Instrument & Plant Air Systems		2,894										(15,000)	
36	Purge and Flush Oil System		258											
37	Solid Waste Disposal		48								90			
38	Ammonia Recovery		1,738		370,035	659,680		(1,029,715)	87,184	4,371				
39	Phenol Recovery		964			26,895	72,893	(99,788)	5,294		(1,599)			
Other	Bldg 41,42, Light, Etc.		4835											
	Natural Gas Imported	(3,497)												
	Off Site BL and Evaporation										1,375	(7,642)		
	Sub Total (Offsit)	263	(377,977)	(456,824)	370,035	1,148,010	539,629	(2,025,477)	(101,838)	4,371	(975)	2,378	(15,000)	0
											0			
	GRAND TOTAL	0	0	(377,756)	377,756	0	0	0	0	4	0	0	0	(529,480)

4. OVERALL FLOW DISTRIBUTION

4. Ov rall Flow Distributions

In this section the overall hydrogen flow distribution and overall water flow distribution are separately presented for the improved baseline. Subsection 4.1 addresses the overall hydrogen flow distribution and 4.2 summarizes the overall water flow distribution.

4.1 Overall Hydrogen Flow Distribution

The overall hydrogen flow distribution for the entire complex is shown in Figure 4.1. This figure schematically shows the input and output flow rates in MMSCFD for several key process plants. As shown in this figure, hydrogen being produced in Plant 9 (Hydrogen Production Plant) gets distributed to Plant 2 (Coal Liquefaction Plant, the heart of the liquefaction complex) and two hydrotreaters, viz, Plant 4 (Naphtha hydrotreater) and Plant 5 (Gas Oil Hydrotreater). The output streams from these plants, goes through the hydrogen purification plant (Plant 6) and through the gas plant (Plant 3).

4.2 Overall Water Flow Distribution

The overall water flow distribution for the entire liquefaction complex is shown in Figure 4.2. This figure schematically describes the sequence and quantity of water flow through the various plants of the entire liquefaction complex. The flow rates through these plants are expressed in gallons per minute.

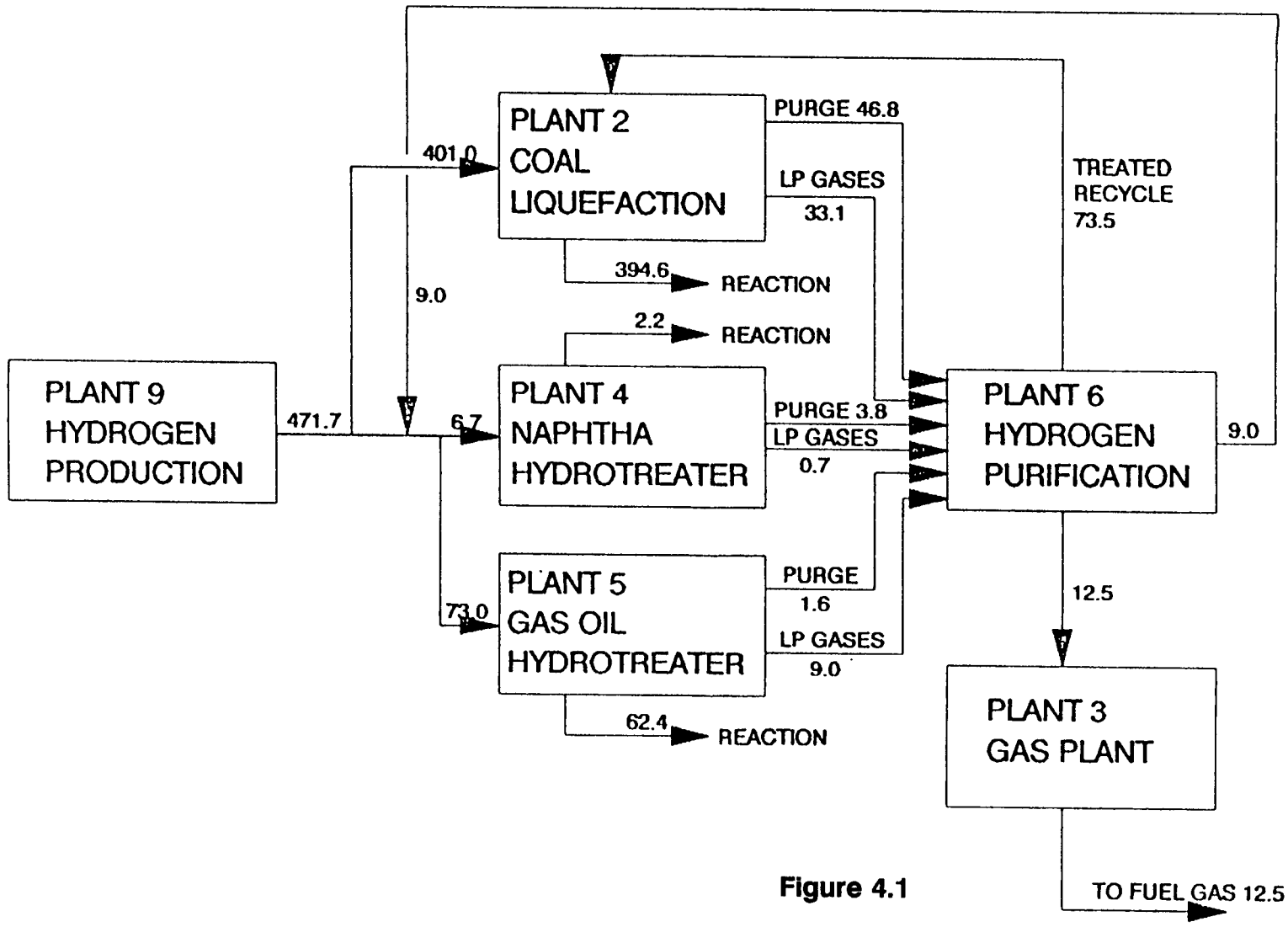

Figure 4.1

NOTES:
Hydrogen flow rates are in MMSCFD (Pure H2)

OVERALL HYDROGEN FLOW DISTRIBUTION

H2FLOCHT.DRW

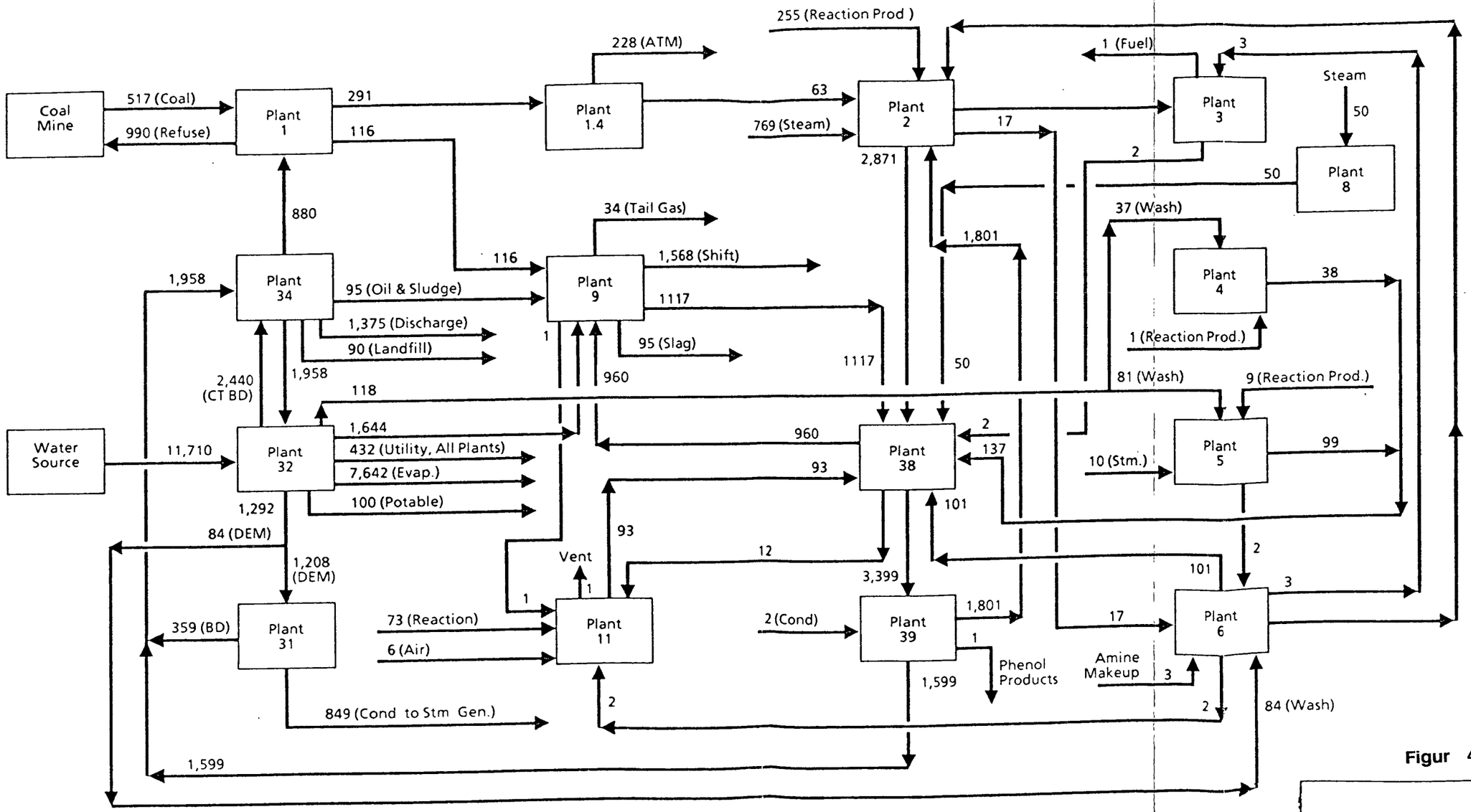

Notes:

1. Flows are for normal operation and in GPM

Figur 4.2

DOE / PETC
COAL LIQUEFACTION
IMPROVED BASELINE CASE

OVERALL WATER FLOW
DISTRIBUTION

1092048-2

5. PLANT 2

5. Plant 2 (Coal Liqu faction)

The key design basis assumptions were developed jointly by DOE/PETC, Amoco, Bechtel, and Burns & Roe.

5.1 Design Basis Criteria and Considerations

Coal Feed

The coal to be fed to the coal liquefaction plant is washed and dried Illinois No. 6 coal (Burning Star Mine) from Plant 1, the Coal Preparation Plant. Analysis of the basis coal is presented in Table 5.1.

Process

The process used will be close-coupled, catalytic-catalytic, two-stage coal liquefaction (H-COAL by HRI) with ashy recycle, recycle of extract from the critical solvent deashing plant, and recycle of 850°F+ to extinction.

Key Design Constraints

The primary goals for the improved baseline liquefaction reactor design are:

(1) to maximize total coal throughput using the same size ebullated-bed coal liquefaction reactors (15 ft. id and 85 ft. high) that were used in the original baseline design, and

(2) to minimize the number of operating trains (5 in the original design).

The key design constraints for the liquefaction reactors were:

- Weight of each reactor: less than 1300 short tons
- Gas velocity in each reactor: less than 0.2 ft/sec
- H2 partial pressure at the second reactor outlet: about 1940 psia
- The reactor outlet temperatures should be less than 830°F to avoid catalyst sintering. The first reactor should have a reasonably high hydrogen consumption (about 3.7 wt% MAF coal) and should be operated at a higher temperature than the second reactor. For the improved baseline design, the first reactor is operated at 810°F versus 760°F for the second reactor.

Table 5.1

Analysis of Feed Coal to Liquefaction
Illinois No. 6 (Burning Star Mine)

Proximate Analysis (wt. %, Dry Basis)	
Volatile Matter	42.2
Fixed Carbon	46.3
Ash	11.5
Ultimate Analysis (wt. %, Dry Basis)	
Carbon	71.0
Hydrogen	4.8
Sulfur	3.2
Nitrogen	1.4
Ash	11.5
Chlorine	0.1
Oxygen (by difference)	8.0
Sulfur Forms (wt. %, Dry Basis)	
Pyrite	1.0
Sulfitic	0.1
Organic	1.9
Ash Composition (wt. % oxidized)	
Phosphorus pentoxide, P_2O_5	0.2
Silica, SiO_2	49.8
Ferric Oxide, Fe_2O_3	17.6
Alumina, Al_2O_3	19.2
Titania, TiO_2	1.0
Lime, CaO	6.3
Magnesia, MgO	1.0
Sulfur Trioxide, SO_3	2.9
Potassium Oxide, K_2O	2.0
Sodium Oxide, Na_2O	0.5
Undetermined	-0.5

The above maximum reactor temperature and minimum hydrogen consumption limits affect the heat liberation rate and the total bed exotherm; which in turn, controls the maximum coal flow rate.

Overall Yields

The conditions of the coal liquefaction reactor for Wilsonville Run 257-J, the improved baseline design case, and the original baseline design case are compared in Table 5.2. For the improved baseline case, the overall coal conversion was assumed to be 92.9 wt% MAF at a coal space velocity (SV) slightly lower than that used in Wilsonville Run 257-J. This lower value reflects (a) resid extinction (0.0 wt% MAF resid yield for the improved baseline case vs. 1.2 wt% MAF for Run 257-J), and (b) a lower organics loss in the ROSE-SR unit for the improved baseline case (15.7 wt% MAF vs. 18.5 wt% MAF for Run 257-J). This improved ROSE-SR unit performance is justified since Wilsonville ROSE-SR unit performance typically improved with days of operation for a given run, and during Runs 261-F and 261-G, the ROSE-SR organics losses were about 15.6 wt% MAF. The total solvent/MAF coal ratio was assumed to be 2.26 lbs/lb (compared to 2.46 lbs/lb used for the original baseline design) with the same solvent composition as that of the original baseline design.

Table 5.2
Key Operating Conditions for Coal Liquefaction Reactor

	257-J	Improved Baseline	Baseline
Coal SV, lb MAF/hr/lb Cat	2.17	1.95	1.12
Temp., °F			
Reactor I	809	810	790
Reactor II	760	760	760
Catalyst addition, lbs/ton MF coal each stage	3/1.5	3/1.5	3/1.5
Solvent/MAF Coal	2.25	2.26	2.46
Resid in Solvent, wt%	50	50	50

The overall liquefaction product yields are compared in Table 5.3. The hydrogen consumption for the improved baseline design was increased to 6.3 wt% MAF (compared to 6.0 wt% MAF in 257-J) to account for the higher C4+ liquids production. The water yield was based on Wilsonville Runs 261-B (8.3 wt% MAF) and 261-D (9.7 wt% MAF). The above H2 consumption and water yield were verified by an overall elemental balance (Table 5.4) for the improved baseline design case.

Table 5.3 Overall Liquefaction Product Yields			
Yields, wt% MAF	**257-J**	**Improved Baseline**	**Baseline**
H2S + H2O + COx + NH3	15.1	13.9	14.0
C1 - C3	5.4	5.5	4.8
(C4 - 350)°F (350 - 450)°F	14.5 7.1	15.8 7.3	16.9 7.5
(450 - 850)°F	44.2	48.1	46.8
C4 + liquids	65.8	71.2	71.2
Resid	1.2	0.0	0.0
Organics in ash-conc.	18.5	15.7*	16.3
H2	(6.0)	(6.3)	(6.2)

* Run 261-F/G: 15.6%

Table 5.4 Primary Liquefaction Yield & Elemental Balance Data Improved Baseline Design Case							
Mass Balances, Lbs/Lb MAF Coal	**Carbon**	**Hydrogen**	**Nitrogen**	**Oxygen**	**Sulfur**	**Ash**	**Total**
Input							
H2	0.00	6.30	0.00	0.00	0.00	0.00	6.30
MAF Coal	80.25	5.42	1.62	9.09	3.62	0.00	100.00
Ash	0.00	0.00	0.00	0.00	0.00	12.96	12.96
TOTAL	**80.25**	**11.72**	**1.62**	**9.09**	**3.62**	**12.96**	**119.26**
Output							
H2O	0.00	1.04	0.00	8.22	0.00	0.00	9.26
H2S	0.00	0.17	0.00	0.00	2.78	0.00	2.95
NH3	0.00	0.25	1.14	0.00	0.00	0.00	1.39
CO2	0.05	0.00	0.00	0.15	0.00	0.00	0.20
CO	0.04	0.00	0.00	0.06	0.00	0.00	0.10
CH4	1.50	0.50	0.00	0.00	0.00	0.00	2.00
C2	1.40	0.35	0.00	0.00	0.00	0.00	1.75
C3	1.43	0.32	0.00	0.00	0.00	0.00	1.75
C4	0.83	0.17	0.00	0.00	0.00	0.00	1.00
C5	0.17	0.03	0.00	0.00	0.00	0.00	0.20
C6 - 350°F	12.44	2.07	0.00	0.07	0.01	0.00	14.60
350 - 450°F	6.36	0.89	0.02	0.04	0.00	0.00	7.30
450 - 650°F	30.17	3.78	0.12	0.17	0.01	0.00	34.25
650 - 850°F	12.32	1.39	0.05	0.09	0.00	0.00	13.85
ASH-CONC.	13.54	0.75	0.28	0.29	0.83	12.96	28.66
TOTAL	**80.25**	**11.72**	**1.62**	**9.09**	**3.62**	**12.96**	**119.26**

Stage I Yields

The Stage I yields, as shown in Table 5.5, were estimated as a fraction of the overall yields. Those for the improved baseline design were based primarily on Wilsonville Runs 261-B and 261-D, since in Run 257-J, the Stage I yields were not measured because the interstage separator which recovers the Stage I products was not used. Thus, for Run 257-J, the resid yield (27.0 wt% MAF) and hydrogen consumption (3.7 wt% MAF) were assumed to be similar to those of the original baseline design.

Table 5.5 Stage I Yields: Original Baseline And Improved Baseline Designs		
Yield, Wt% MAF Coal	**Improved Baseline**	**Original Baseline**
CO	0.04	0.04
CO2	0.13	0.09
NH3	0.98	0.95
H2O	6.71	7.10
H2S	2.10	2.00
C1	0.83	0.91
C2	1.19	0.74
C3	1.37	0.85
C4	0.47	0.40
C5-350°F	4.14	8.00
350-450°F	1.67	4.90
450-650°F	6.21	7.00
650-850°F	2.51	15.20
850-1000°F	40.92	18.52
Resid	27.00	26.80
UC	7.46	10.20
H2 (Consumed)	(3.73)	(3.70)

Product Quality (API Gravity)

The API gravity of the various product fractions are shown in Table 5.6.

Table 5.6 API Gravity of Various Fractions	
Fractions	**API Gravity***
IBP - 350°F	50.8
305 - 450°F	29.7
450 - 750°F	19.0
750 - 850°F	9.3
850 - 1000°F	1.0
1000^{+} °F	-10.5

* The data (except for 1000^{+} °F) are based on the average values of API gravities from Wilsonville pilot plant runs 261B and 261D.

Gas Flows

The key recycle gas (i.e., the untreated internal recycle streams, as well as the treated purified hydrogen recycle stream shown in Figure 5.1) rates and compositions are given in Table 5.7. These rates were estimated (1) to correspond to the desired second reactor outlet hydrogen partial pressure (about 1940 psia), and (2) to maintain required C1-C3 gas purge rate.

Table 5.7
Recycle Gas Flow Rates for the Improved Baseline Design

Flow Rate, lbs/hr/train	Treated Recycle Gas to Stage I	Untreated Recycle Gas to Stage I	Untreated Recycle Gas to Stage II
N2	69.0	357.0	1433.0
H2	4037.0	4000.0	16048.0
H2O	13.0	32.7	131.3
H2S	0.0	734.4	2947.0
NH3	0.0	1.6	6.4
CO	75.0	390.5	1567.0
CO2	0.0	38.9	156.1
CH4	1366.0	6077.0	24381.0
C2H6	619.0	3172.0	12728.0
C3H8	379.0	1940.0	7784.0
C4H10	131.0	667.0	2678.0
C5H12	212.0	1102.0	4420.0
Total	**6901.0**	**18514.0**	**74278.0**

Key Design Parameters

The coal liquefaction kinetic model and the ebullated-bed fluid dynamics correlations (developed for the baseline design) were used to estimate the maximum coal feed rate per reactor train subject to the design constraints, product yields and catalyst addition rate for each reactor. Some modifications to the original USR2G Fortran kinetic model (described in Section 12 of the Topical Report for Task V) were required to account for the differences in product yields between the original baseline and the improved baseline design cases.

Figure 5.1
Improved Baselin Design Sch m
BASELINE DESIGN - SCHEME 1
BATTERY LIMITS STREAMS

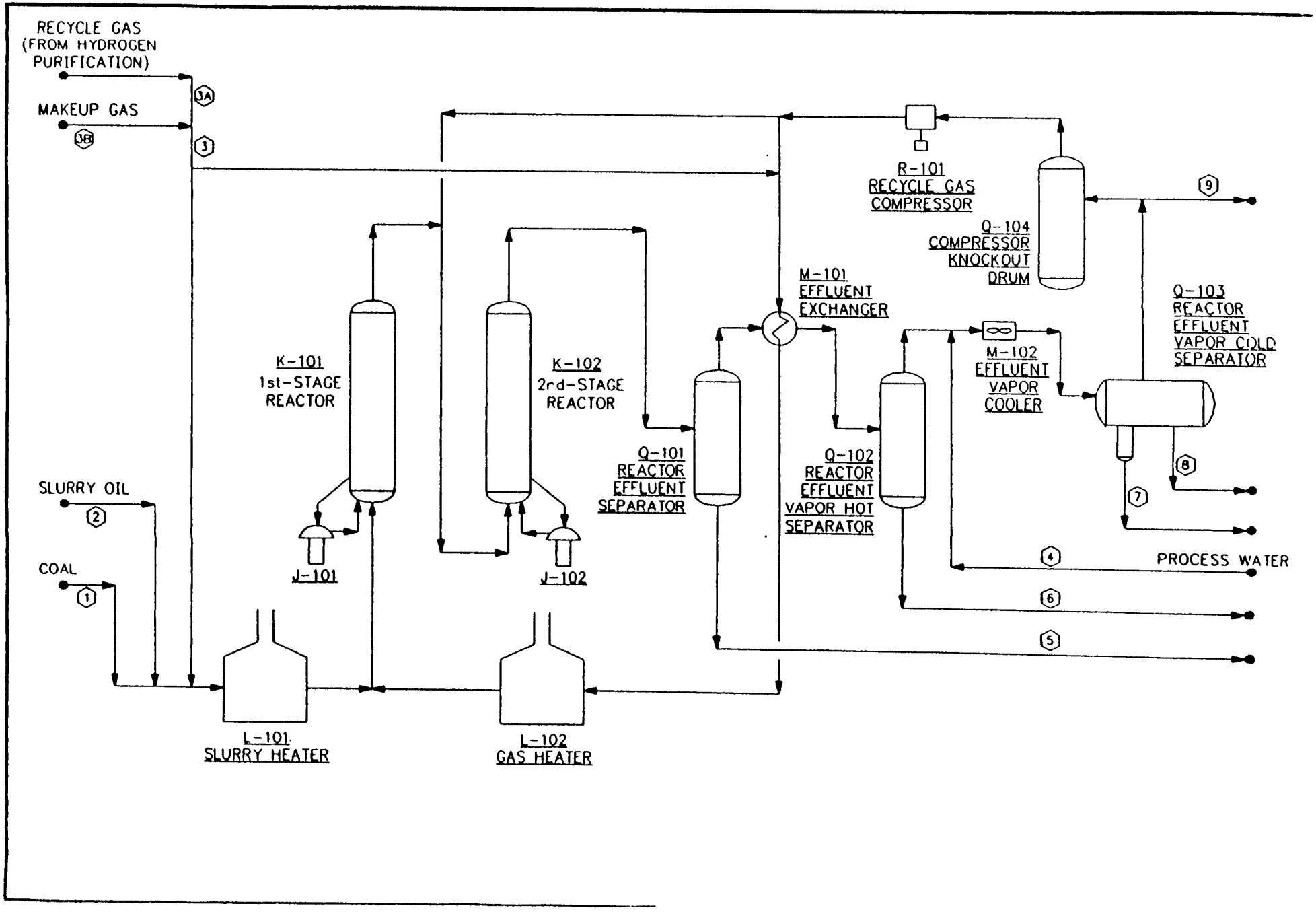

As shown in Table 5.8, the space velocity assumed for the improved baseline design allowed the use of four operating trains (compared to five for the original baseline) with a 9 percent increase in overall coal throughput over the original baseline design. For the high temperature first stage, the outlet temperature was estimated to be about 827°F compared to the assumed design constraint of 830°F. Each ebullated-bed reactor has the same 15 ft internal diameter as the original baseline design, but a lower catalyst loading. For the improved baseline design, the settled catalyst bed height is about 34 ft compared to about 44 ft in the original baseline design. The ebullated-bed pump recycle rate was estimated to give a bed expansion to about 77 ft. The total gas/liquid velocities in each reactor and the hydrogen partial pressure at the second stage outlet also are within the design limits.

Table 5.8
Comparative Design Data: Improved Baseline vs. Baseline Designs

Design Cases	**Improved Baseline**		**Baseline**	
Number of Operating Trains	4		5	
Coal feed rate/train, Mlb MAF/hr	343.8		252.3	
Reactor [a,b]	**1st Stage**	**2nd Stage**	**1st Stage**	**2nd Stage**
Velocity, fps				
Gas	0.14	0.19	0.11	0.21
Liquid	0.12	0.11	0.10	0.08
Bed Height, ft.				
Settled	34	34	44	44
Expanded	77	77	77	77
Recycle/Fresh Feed ratio	5.6	3.1	6.0	3.3
Reactor Average Temp, °F	810	760	790	760
Bed Exotherm, °F	34	30	30	27
Reactor Outlet Temp, °F	827	775	805	774
H2 partial pressure, psia	2232	1934	2243	2061

(a) Catalyst: average diameter, 0.083 inches; length, 0.24 inches
(b) Reactor ID (excluding refractory), ft: 15
Refractory thickness, in.: 6
Total height, ft.: 85
Weight, Short tons: 1295

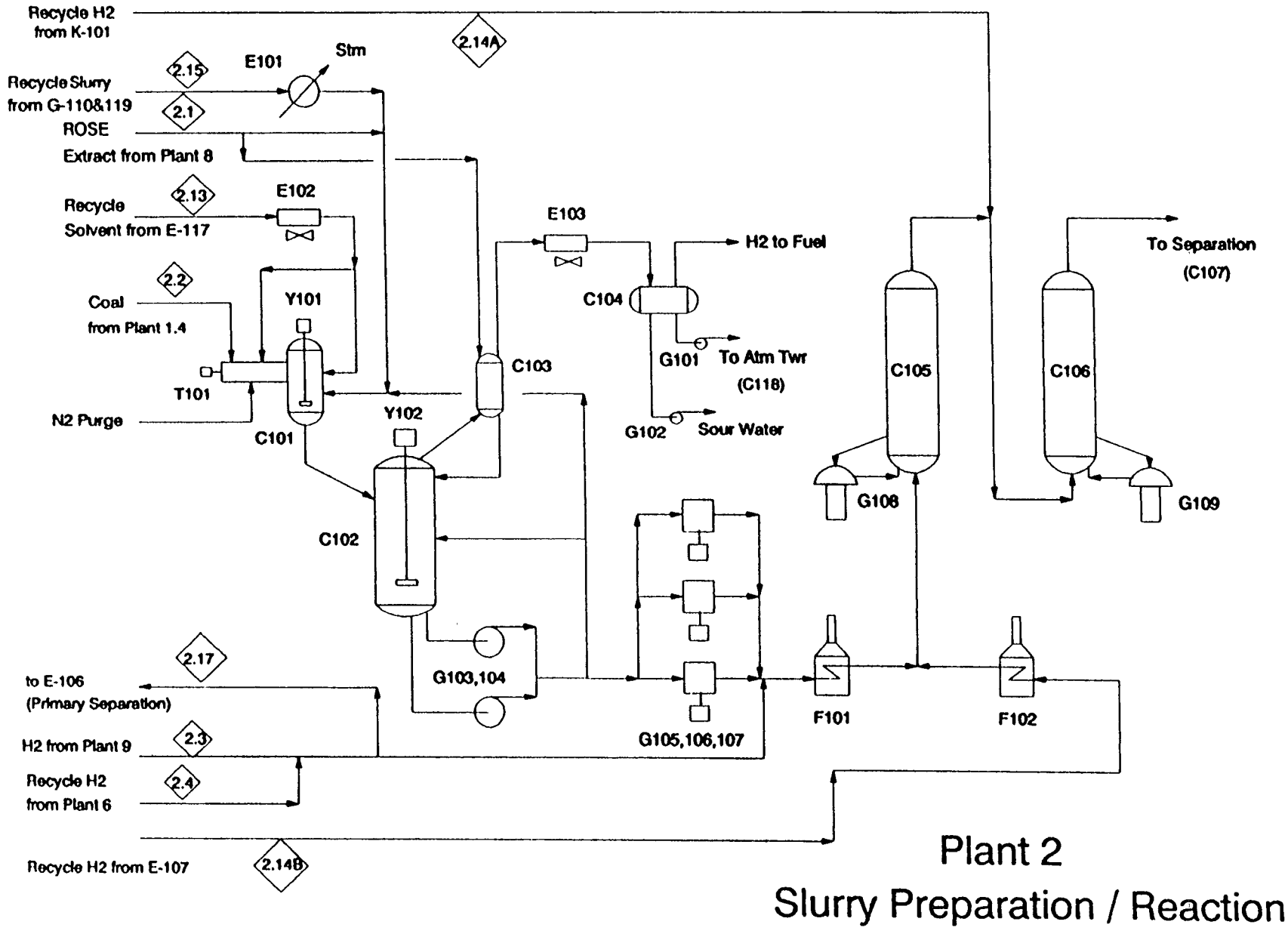

Figur 5.2 **Process Flow Diagram**

The reactors incorporate the principle of the ebullated-bed operation. The entire mass in the reactor is kept in a fluidized ebullated state by recirculating coal-oil slurry from the top of the reactor through the Ebullating Pumps (G108 and G109) back to the bottom of the reactor. The ebullated bed ensures the reactor's near isothermal operation under the extreme exothermic reactions involved. Since the coal particles are much finer than the extrudate catalyst, a separation can be made between these solids such that the coal and ash particles are entrained with the liquid-gaseous reactor effluent products, while the catalyst remains behind in suspension in the reactor.

Primary Separation

As shown on Figure 5.3, the effluent from the top of the Second Stage Reactor is sent directly to the Hot High Pressure Separator (C107) at 760°F and 3000 psig. The overhead vapor, after being separated from the slurry, is cooled to 550°F in exchange with recycle and makeup hydrogen in exchanger E107 and enters the Warm High Pressure Separator (C110). The temperature of the separator is set high enough to prevent precipitation of ammonium salts. The overhead of the warm separator is cooled to 130°F in exchange with recycle and makeup hydrogen in exchanger E106 and in air-fin exchanger E109 before entering the Cold High Pressure Separator (C113). Wash water is injected ahead of the air-fin cooler for control of ammonium salt deposition as the vapor is cooled. The vapor from that separator is compressed in the Recycle Hydrogen Compressor (K101) and returned to the reactors as recycle hydrogen. A portion of the stream is purged from the system to the Hydrogen Purification Unit (Plant 6) to prevent the build-up of methane and other non-condensables in the system. The water phase is withdrawn to the Sour Water Flash Drum (C116) and eventually to Plant 38 for recovery of anhydrous ammonia.

The liquid from the Hot High Pressure Separator is flashed to 100 psig in the Hot Low Pressure Separator (C108). The vapor from the Hot Low Pressure Separator is cooled from 750°F to 450°F in exchange with the Warm Low Pressure Separator liquid (E104) and in an exchanger producing 150 psig steam (E105). The mixed vapor-liquid stream then enters the Warm Low Pressure Separator (C111) along with the liquid from the Warm High Pressure Separator. The temperature of the separator is set high enough to prevent precipitation of ammonium salts. The vapor from the Warm Low Pressure Separator is cooled to 130°F in an air-fin cooler (E110) and enters the Cold Low Pressure Separator (C114) along with the liquid from the Cold High Pressure Separator. Wash water is injected ahead of the air-fin cooler for control of ammonium salt deposition. The vapor from this separator is sent to the Hydrogen Purification Plant, the liquid is sent to the Product Distillation Feed Flash Drum (C117), and the water phase is sent to the Sour Water Flash Drum (C116). The liquid from the Warm Low Pressure Separator is heated by the feed to that vessel in exchanger E104 and sent to the Product Distillation Feed Flash Drum. The liquid from the Hot Low Pressure Separator is further flashed to 20 psig in the Recycle Slurry Hold Drum (C109). The vapor is cooled in air-fin exchanger E108 and sent to the Recycle Slurry Hold Drum Overhead Accumulator. The vapor from this

drum is sent to Plant 6, the liquid is sent to the Product Distillation Surge Drum, and the water phase is sent to the Sour Water Flash Drum. Some of the liquid from the Recycle Slurry Hold Drum is returned via pump G110 as recycle solvent to the coal slurry tank with the remainder being sent to the Product Distillation Surge Drum.

Product Fractionation

As shown in Figure 5.4, the liquid products from the three low pressure separators in the coal liquefaction plant are sent to the Product Distillation Feed Flash Drum (C126) from where the combined stream is pumped through the Atmospheric Feed Heater (F103) to the Atmospheric Distillation Tower (C118). Vapors from the surge drum are vented directly to the atmospheric tower. Two products are taken from the Atmospheric Tower Overhead Accumulator (C120): a naphtha product (IBP - 350°F) which is sent as feed to the Naphtha Hydrotreater via Plant 3, where it is used as lean oil; and a sour water stream which is sent to the Wash Water Surge Drum (C115) on the Coal Liquefaction Plant. An overhead vapor stream from the overhead accumulator is compressed by Compressor (K102) and sent to Plant 6. A sidestream product (350°F+) is withdrawn from a sidestream stripper (C119) and sent as feed to the Gas Oil Hydrotreater via cold (110°F) intermediate tankage. The bottoms stream off the atmospheric tower is pumped to two dispositions: as recycle solvent back to the Coal Slurry Tank with the remainder being sent to the Vacuum Feed Heater (F104) ahead of the Vacuum Distillation Tower(C122). Three products are taken overhead from the vacuum tower: a light gas oil product (450°F+) which is sent to the Gas Oil Hydrotreater via the same intermediate tankage as the atmospheric sidestream product; an overhead vapor stream which is compressed and sent to Plant 6; and a sour water stream which is sent to the wash water surge drum on the Coal Liquefaction Plant. An upper sidestream product (≈550°F - 850°F) is withdrawn and sent to the Gas Oil Hydrotreater via hot (400°F) intermediate tankage. A lower sidestream product (850°F - 1000°F) is withdrawn from a sidestream stripper (C123) and returned as recycle solvent to the Coal Slurry Tank. The vacuum tower bottoms stream is sent to the solids-liquids separation unit, Plant 8.

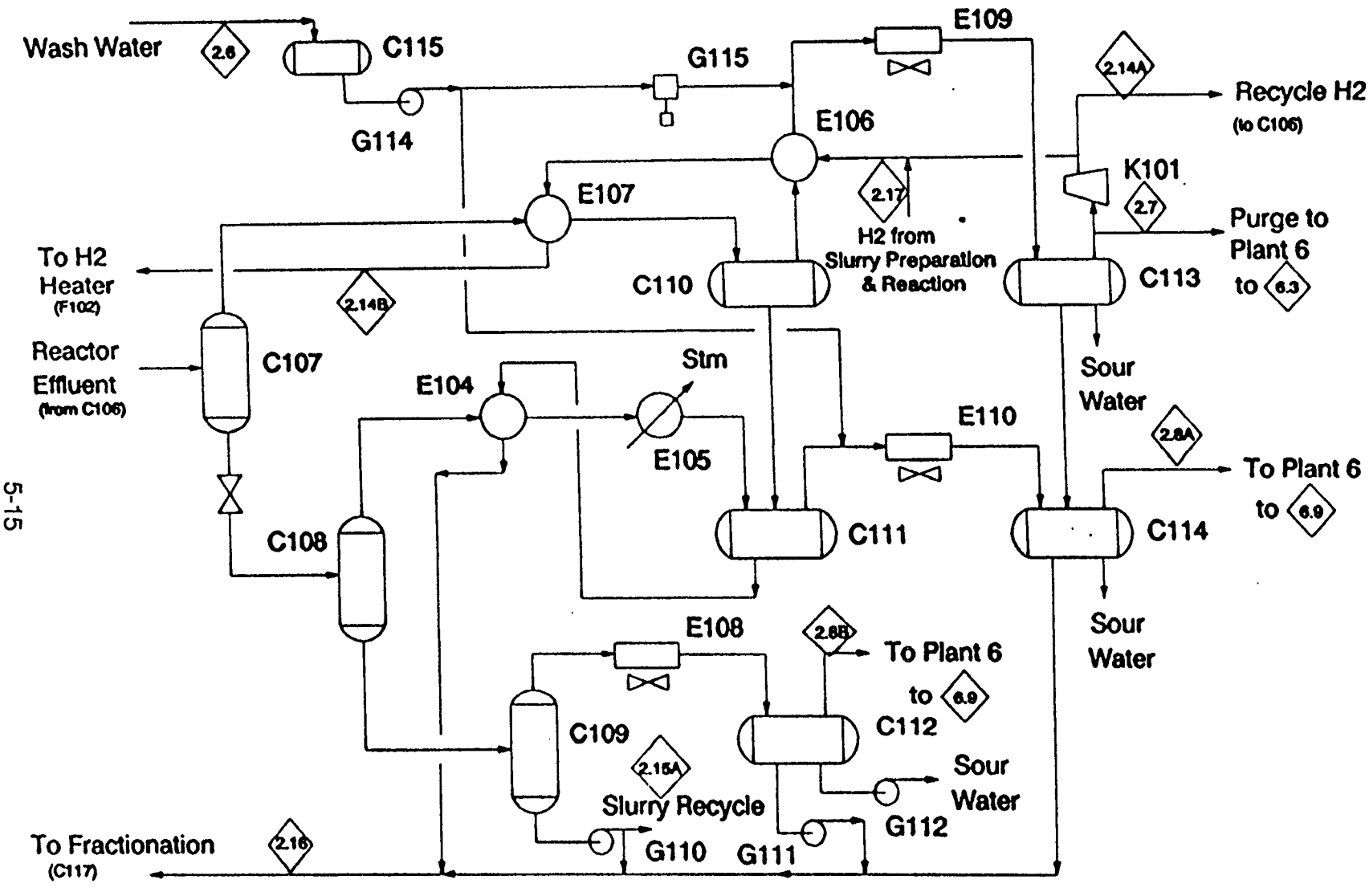

Figur 5.3 **Process Flow Diagram**

Plant 2
Primary Separation

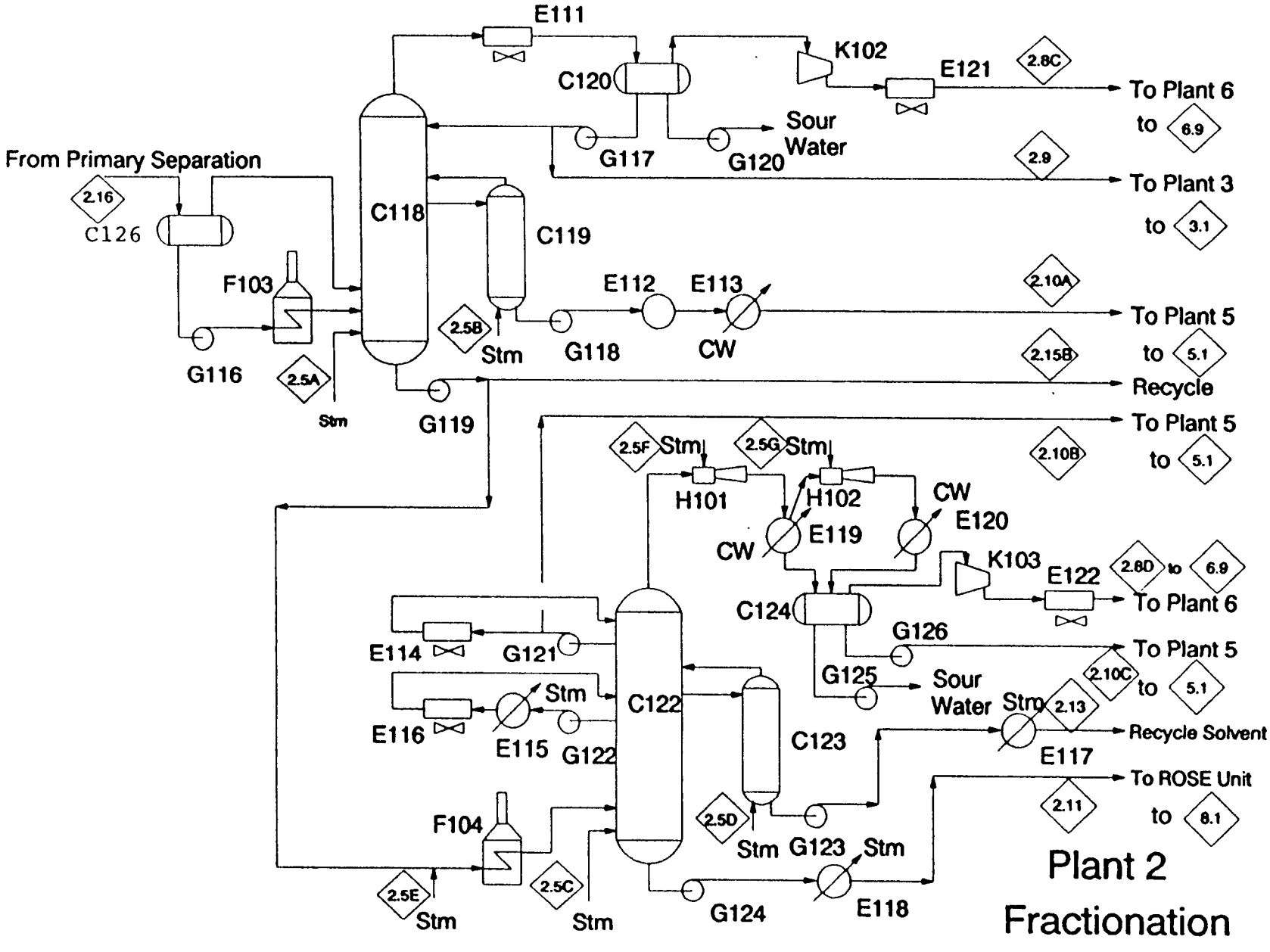
E111
C120
K102
E121
2.8C
To Plant 6
to 6.9
Sour
Water
G117
G120
2.9
To Plant 3
to 3.1
From Primary Separation
2.16
C126
C118
C119
F103
E112
E113
2.10A
To Plant 5
to 5.1
2.5B
Stm
G118
CW
2.15B
G116
2.5A
Stm
G119
Recycle
To Plant 5
to 5.1
2.5F Stm
2.5G Stm
2.10B
H101
H102
CW
E120
CW
E119
K103
E122
2.8D to 6.9
To Plant 6
C124
G126
To Plant 5
to 5.1
E114
G121
G125
Sour
Water
2.10C
Stm
2.13
Recycle Solvent
E116
Stm
E115
G122
C122
C123
E117
To ROSE Unit
to 8.1
2.11
F104
2.5D
Stm
G123
Stm
2.5E
Stm
2.5C
Stm
G124
E118
Plant 2
Fractionation

Figur 5.4

5.3 Material Balanc

Plant 2 consists of 4 operating trains. The material balance per train is shown in Table 5.9. The overall material balance per train for the Plant 2 is schematically shown in Figure 5.5.

Table 5.9
Improved Baseline Case

Plant 2
Material Balance (Per Train)

PLANT INPUT

COMPONENTS	COAL #/hr	MAKEUP H2 #/hr	RECYCLE H2 FR #6 #/hr	WASH WATER #/hr	STEAM #/hr	ROSE EXTRACT #/hr	Rxn Delta #/hr	CRACKED GAS #/hr	TOTAL INLET #/hr
N2		308	69						377
H2		22012	4037				-21659		4390
H20	7926		13	225127	96165		31838		361067
H2S							10142		10142
NH3							4779		4779
CO			75				344		419
CO2							688		688
C1			1366				6876		8242
C2			619				6016	375	7010
C3			379				6017	183	6579
C4			131				3438	242	3811
C5-350			212				50882		51094
350-450							24961		24961
450-650							117115		117115
650-850						332	47358		47690
850-1000						514	2269	-69	2714
1000+						124486	24203	-731	147958
PHENOLS							1031		1031
MEA									0
UNCONVERTED COA	343800						-316296		27504
ASH	44556								44556
TOTAL	396282	22320	6901	225127	96165	125332	0	0	872127

PLANT OUTPUT

COMPONENTS	PURGE H2 #/hr	PURGE GASES #/hr	NAPHTHA #/hr	GAS OIL #/hr	ROSE FEED #/hr	SOUR WATER #/hr	TOTAL OUTLET #/hr
N2	230	148					378
H2	2571	1817				2	4390
H20	21	2114	22	87		358822	361066
H2S	472	1664	32			7974	10142
NH3	1	67	8			4703	4779
CO	251	168					419
CO2	25	67				596	688
C1	3906	4325	2			9	8242
C2	2039	4940	25			6	7010
C3	1247	5162	169			1	6579
C4	429	3021	361				3811
C5-350	699	10316	38553	1526			51094
350-450	7	126	456	24372			24961
450-650	2	187		116926			117115
650-850		2		47356	332		47690
850-1000				229	2485		2714
1000+					147958		147958
PHENOLS						1031	1031
MEA							0
UNCONVERTED COAL					27504		27504
ASH					44556		44556
TOTAL	11900	34124	39628	190496	222835	373144	872127

Figur 5.5
Impr ved Bas lin Mat rial Balanc (P r Train)

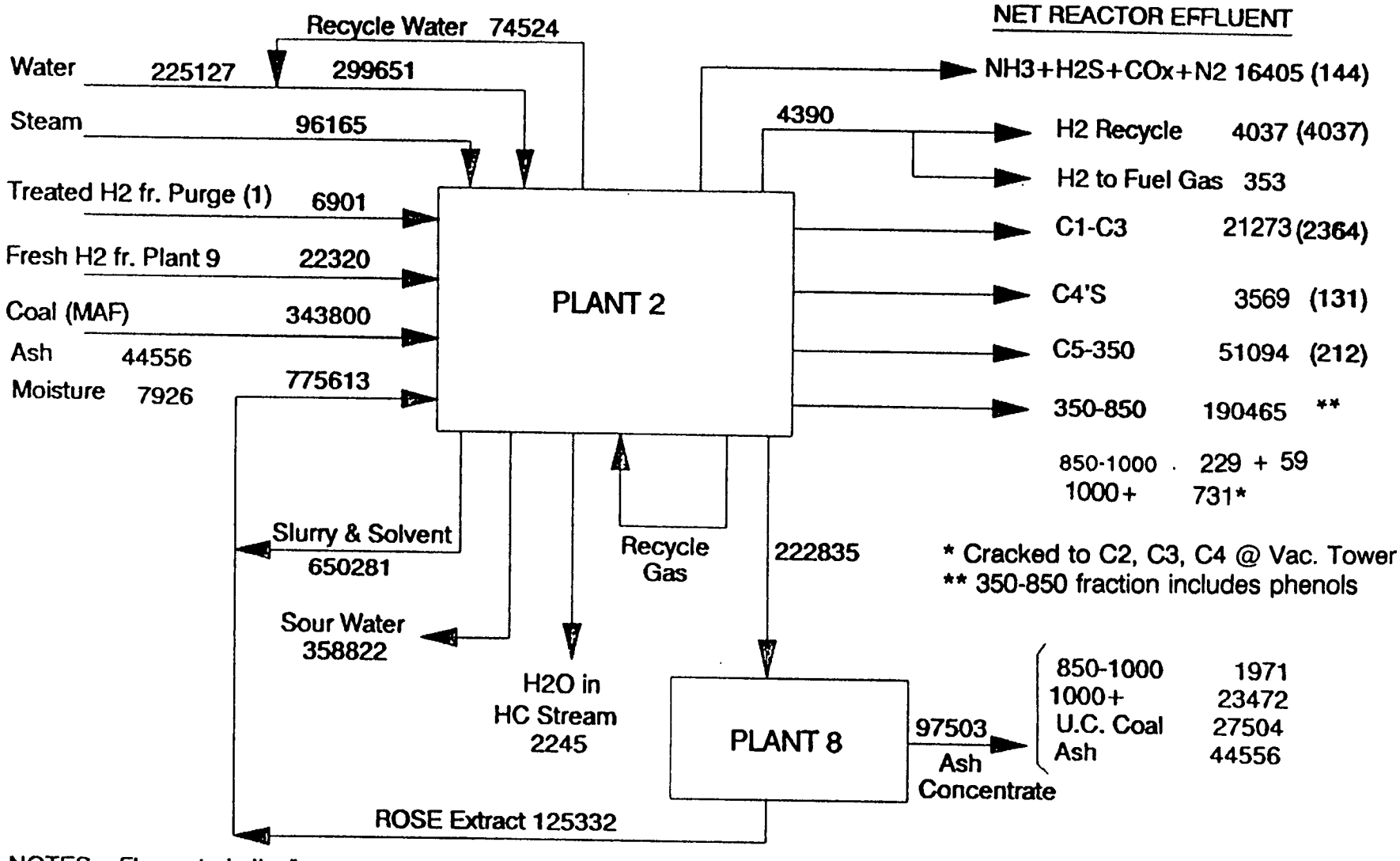

NOTES: . Flow rate in lbs/hr

- Numbers in parenthesis are due to input stream (1). Therefore, to calculate the % yield, subtract out the corresponding number in parenthesis.
- The HC's in sour water are shown in net reacter effluent.

5.4 Utility Summary

The utility summary for the coal liquefaction plant (Plant 2) is presented in Table 5.10.

Table 5.10

PLANT 2 UTILITY SUMMARY (per train)

Steam, lb/hr	
600 psig	-39,110
150 psig	-24,551
50 psig	44,091
Demineralized Water gpm	232
Cooling Water, gpm	2,206
Water, gpm	450
Fuel Gas, MMSCFD	7
Electricity, Kw	14,791
Nitrogen, MMSCFD	0.3

Note: Negative values represent utility production.

5.5 Water Summary

The water summary for the coal liquefaction plant (Plant 2) is included in Table 5.11. The summary table is for one train of the four train plant.

Table 5.11

Water Summary (per train), Plant 2

Water Inlet	lb/hr
Coal feed	7,926
Produced in Reactors	31,836
Wash Water	299,651
Steam	96,165
Recycle H_2 from Plant 6	13
TOTAL	435,591
Water Outlet	
Sour Water to NH_3 Recovery	358,822
Recycled to Wash Water	74,524
Hydrogen Purge	21
Low Pressure Gases to Plant 3	2,114
Products to Plants 4 and 5	109
TOTAL	435,590
Wash Water Summary	
Requirements	299,651
Separator Water Recycled	74,524
Makeup Wash Water	225,127

5.6 Catalyst and Chemical Summary

Catalyst and chemicals required for Plant 2 are shown below:

Catalyst or Chemical	EXP-AO-60 1/12", Extrudate
Quantity required for start up	1,802,400 lb.
Consumption	83,885 lbs/day

5.7 Operating Manpower Requirements

The operating manpower requirements for this plant is 32 operators. For full manpower requirements of this plant as well as the entire complex, refer to Section 15 of this report.

5.8 Major Equipment Summary

The major equipment for Plant 2 of the improved baseline are summarized in Table 5.12. As mentioned earlier, the plant is comprised of four operating trains. The equipment summary, however, is for a single train.

Tabl 5.12 Maj r Equipment Summary (per train)

IMPROVED BASELINE CASE

Plant 2 - Coal Liquefaction

Reactors and Vessels

Equipment No.	Equipment Description	Length (T-T in ft.)	Diameter (ID in ft.)	Material	Design Conditions Pres (psig)	Design Conditions Temp (°F)	Orientation	Comments
COAL SLURRY PREPARATION								
2.1- C101	Slurry Vortex Mx Tnk Innr Shll	12.5	12.5	A-515	10	750	Vertical	
	Slurry Vortex Mx Tnk Outr Shll	18.0	14.5	A-515	10	750	Vertical	
2.1- C102	Slurry Surge Tank	48.0	20.0	A-285	10	750	Vertical	
2.1- C103	Slurry Srge Tank Vent Scrubber	32.0	5.0	A-516	10	450	Vertical	
2.1- C104	Scrubber Overhead Receiver	10.5	3.5	A-516	10	400	Horizontal	
REACTION SYSTEM								
2.3- C105	Coal Liquefaction - Stage 1	85.0	15.0	2-1/4Cr, 1Mo	3300	600	Vertical	(1)
2.4- C106	Coal Liquefaction - Stage 2	85.0	15.0	2-1/4Cr, 1Mo	3300	600	Vertical	(1)
PRIMARY SEPARATION								
2.5- C107	Hot High Pressure Separator	22.5	12.5	SA387-GR22 CL2	3300	850	Vertical	(2)
2.5- C108	Hot Low Pressure Separator	26.0	11.5	CS	150	800	Vertical	
2.5- C109	Recycle Slurry Hold Drum	24.0	11.5	CS	50	800	Vertical	
2.5- C110	Warm High Pressure Separator	18.0	8.5	SA387-GR22 CL2	3300	600	Vertical	(3)
2.5- C111	Warm Low Pressure Separator	28.5	9.0	CS	100	500	Horizontal	
2.5- C112	Recy Slry Hold Drm Cond Accu	13.5	4.0	A-516	50	700	Horizontal	Boot: 1.5'D X 3'
2.5- C113	Cold High Pressure Separator	29.5	9.0	SA387-GR11 CL2	3300	450	Horizontal	(4)
2.5- C114	Cold Low Pressure Separator	37.0	11.5	CS	100	450	Horizontal	
2.5- C115	Wash Water Drum	27.0	8.5	CS	10	150	Horizontal	
2.5- C116	Sour Water Drum	29.0	9.0	CS	50	150	Horizontal	
2.5- C117	Compressor Knockout	13.0	6.5	Carbon Steel	3300	450	Vertical	

• NOTE: Equipment shown is for a single train. There are four total trains.

Sheet 1

Tabl 5.12 MAJOR EQUIPMENT SUMMARY - CONTINUED

Reactors and Vessels, cont.

Equipment No.	Equipment Description	Length (T-T in ft.)	Diameter (ID in ft.)	Material	Design Conditions Pres (psig)	Design Conditions Temp (°F)	Orientation	Comments
CRUDE PRODUCT FRACTIONATION-ATMOSPHERIC TOWER								
2.6- C120	Overhead Accumulator	28.5	9.0	CS	10	300	Horizontal	Boot: 2.5'D X 4'
2.6- C121	Vent Gas Compress Knockout	8.0	5.5	CS	10	200	Vertical	
2.6- C126	Feed Flash Drum	29.5	14.0	A-387	150	800	Vertical	
CRUDE PRODUCT FRACTIONATION-VACUUM TOWER								
2.6- C124	Vacuum Jet Condenser Accum	16.0	5.0	CS	10	400	Horizontal	
2.6- C125	Vent Gas Compress Knockout	8.0	5.0	CS	10	150	Vertical	

Comments:

(1) 11.6 thick, 1282 ST, 347 SS Overlay, 6" refractory lined
(2) 347 SS clad, refractory lined
(3) 347 SS clad
(4) 321 SS clad

Towers

Equipment No.	Equipment Description	Height (T-T in ft.)	Diameter (ID in ft.)	Material	Design Conditions Pres (psig)	Design Conditions Temp (°F)	No. of Trays	Type of Trays
CRUDE PRODUCT FRACTIONATION								
2.6- C118	Atmospheric Fractionator	150	Trays 1-16: 11'6	CS	50	800	16	Seive Tray: 410SS Internals
			Trays 17-22:				6	Seive
			Trays 11'6"X7'6"					
			Trays 23-44: 7'6"				22	Seive
			Trays 45-48				4	Grid
2.6- C119	AGO Stripper	30	3.0	CS	50	700	10	Seive Tray: 410SS Internals
2.6- C122	Vacuum Fractionator	60	Trays 1-18:19'6"	A-516	FV / 10	800	18	Seive
			Trays 19,20: 8'				2	Grid
2.6- C123	Vac Recy Solvent Stripper	30	4'6"	CS	FV / 10	700	10	Seive

Sheet 2

Tabl 5.12 MAJOR EQUIPMENT SUMMARY - CONTINUED

Fired heaters

Equipment No.	Equipment Description	Absorbed Duty (MM Btu/hr)	Fired Duty (MM Btu/hr)	Tube Material	Design Conditions Pres (psig)	Design Conditions Temp (°F)	
REACTION SYSTEM							
2.2- F101	Coal Slurry Heater	119.9	156.7	347 SS	3300	850	
2.3- F102	Gas Heater	59.9	77.7	347 SS	3300	850	
CRUDE PRODUCT FRACTIONATION							
2.6- F103	Atmospheric Fractionator Htr	28.2	36.3		200	800	Rad: 5 CR 1/2 MO Conv: CS
2.6- F104	Vacuum Fractionator Preheater	22.3	28.2		200	800	Rad: 5 CR 1/2 MO Conv: CS

Sheet 3

Tabl 5.12 MAJOR EQUIPMENT SUMMARY - CONTINUED

Heat Exchangers

Equipment No.	Equipment Description	Duty (MM Btu/hr)	Type of Exchanger	No. Shells/ Area/Shell (sq ft)	Design Conditions Tube P/T (psig/°F)	Design Conditions Shell P/T (psig/°F)	Material of Construction Tube	Material of Construction Shell	Air-Fin BHP	Notes
COAL SLURRY PREPARATION										
2.1- E101	Recycle Slurry Steam Generator	47.0	Shell & Tube	1/ 4810	150 / 750	200 / 400	321 SS			
2.1- E102	Recycle Solvent Cooler	5.9	Air-Fin	1/ 1301	150 / 450	10 / 250	316 SS		40	
2.1- E103	Slurry Srge Tank Overhead Con	8.6	Air-Fin	1/ 974	10 / 450	10 / 250	A-516 w/304 LSS Clad		40	
PRIMARY SEPARATION										
2.5- E104	Hot LP Sep Vap Cooler	6.3	Shell & Tube	1/ 1114	100 / 650	150 / 800	SA516-70 w/304 LSS Clad	387 GR2 w/304 LSS Clad		
2.5- E105	Hot LP Sep Vap Steam Gen	19.2	Shell & Tube	1/ 2351	200 / 400	150 / 750		SA516 GR70		
2.5- E106	1st Hydrogen Preheater	21.5	Shell & Tube	1/ 2115	3500 / 250	3300 / 600	304 LSS	304 LSS 2-1/4 CR/MO Clad		
2.5- E107	2nd Hydrogen Preheater	52.6	Shell & Tube	1/ 5778	3500 / 400	3300 / 850	304 LSS	304 LSS 2-1/4 CR/1 MO Clad		
2.5- E108	Slurry Hold Drum Vap Cond	4.2	Air-Fin	1/ 801	50 / 800	10 / 250	316 LSS		40	
2.5- E109	Warm HP Sep Vap Cooler	87.5	Air-Fin	1/ 13940	3300 / 350	10 / 250	316 LSS		80	
2.5- E110	Warm LP Sep Vap Cooler	19.5	Air-Fin	1/ 3448	150 / 300	10 / 250	Monel		200	
CRUDE PRODUCT FRACTIONATION-ATMOSPHERIC TOWER										
2.6- E111	Atmos Frac Ovhd Condenser	63.2	Air-Fin	1/ 14644	10 / 300	10 / 250	CS		120	
2.6- E112	AGO Product Cross Exchanger	8.4	Shell & Tube	1/ 3875	100 / 400	100 / 450	CS	CS		
2.6- E113	AGO Product Cooler	9.9	Shell & Tube	1/ 2299	100 / 150	100 / 450	CS	CS		
2.6- E121	Atm VG Comp Aftercooler	0.7	Air-Fin	1/ 369	50 / 300	10 / 250	CS		40	
CRUDE PRODUCT FRACTIONATION-VACUUM TOWER										
2.6- E114	LVGO Pumparound Cooler	49.1	Air-Fin	1/ 16181	100 / 300	10 / 250	11-13 CR		40	(1)
2.6- E115	HVGO Pumparound Steam Gen	8.8	Shell & Tube	1/ 2285	100 / 700	200 / 400	11-13 CR	SA516		(2)
2.6- E116	HVGO Pumparound Cooler	2.4	Air-Fin	1/ 213	100 / 450	10 / 250	11-13 CR		40	(1)
2.6- E117	HVGO Product Steam Gen	5.5	Shell & Tube	1/ 1597	150 / 650	200 / 400	11-13 CR	SA516		
2.6- E118	Bottoms Product Steam Gen	43.0	Shell & Tube	1/ 9567	150 / 750	200 / 400	11-13 CR	SA516		
2.6- E119	1st Steam Jet Condenser	22.1	Shell & Tube	1/ 2200	100 / 150	10 / 400	11-13 CR			(2)
2.6- E120	2nd Steam Jet Condenser	0.1	Shell & Tube	1/ 14	100 / 150	10 / 400	11-13 CR			
2.6- E122	Vac VG Aftercooler	0.01	Shell & Tube	1/ 3	100 / 150	50 / 250	CS	CS		

Notes:

(1) Design tubes for full vacuum (FV)

(2) Design shell for full vacuum (FV)

Tabl 5.12 MAJOR EQUIPMENT SUMMARY - CONTINUED

Compressors

Equipment No.	Equipment Description	Case	Flow Rate (MMSCFD)	Brake Horsepower	Design Conditions Pres Inlet (psig)	Pres Outlet (psig)	Temp (°F)	Driver	# Required
PRIMARY SEPARATION									
2.7- K101	Recycle Hydrogen		153	945	2,935	3,235	150	Elect Motor	1
CRUDE PRODUCT FRACTIONATION									
2.6- K102	Atmospheric Vent Gas		0.7	44	1	15	180	Elect Motor	1
2.6- K103	Vacuum Vent Gas		0.04	3	2	15	200	Elect Motor	1

Pumps

Equipment No.	Equipment Description	Case	Flow Rate (gpm)	Delta Pres (psi)	Brake Horsepower	Design Conditions Pres (psig)	Temp (°F)	Driver	# Required
COAL SLURRY PREPARATION									
2.1- G101	Scrubber Condenser Product	316 SS	1	100	2	150	200	Elect Motor	2
2.1- G102	Scrubber Sour Water	316 SS	20	50	2	100	200	Elect Motor	2
2.1- G103	Coal Slurry Booster Pump	HC250 26% CHR	1500	70	95	100	450	Elect Motor	3
REACTION SYSTEM									
2.3- G105	Slurry Charge		729	3025	4700	3300	450	Elect Motor	4
2.3- G108	Stage 1 Ebullating	347 SS	----------		Proprietary	----------			2
2.4- G109	Stage 2 Ebullating	347 SS	----------		Proprietary	----------			2
PRIMARY SEPARATION									
2.5- G110	Slurry Recycle Pump	Monel	2214	95	164	150	800	Elect Motor	2
2.5- G111	Recy Slr Hld Drm Cnd Acm Liq	S-6	20	40	2	100	200	Elect Motor	2
2.5- G112	Recy Slr Hld Dr Cnd Ac Sr Wtr	C-6	1	40	2	100	200	Elect Motor	2
2.5- G113	Sour Water Drum Pump	C-6	858	35	27	100	200	Elect Motor	2
2.5- G114	Wash Water LP Pump	C-6	620	75	41	100	200	Elect Motor	2
2.5- G115	Wash Water HP Pump	C-6	293	3125	743	3400	200	Elect Motor	2

Sheet 5

Table 5.12 MAJOR EQUIPMENT SUMMARY - CONTINUED

Pumps, cont.

Equipment No.	Equipment Description	Case	Flow Rate (gpm)	Delta Pres (psi)	Brake Horsepower	Design Conditions Pres (psig)	Design Conditions Temp (°F)	Driver	# Required
CRUDE PRODUCT FRACTIONATION-ATMOSPHERIC TOWER									
2.6- G116	Atmos Heater Charge	13 CR	1625	150	206	150	800	Elect Motor	2
2.6- G117	Reflux/Naphtha Product	S-5	414	50	17	100	200	Elect Motor	2
2.6- G118	AGO Product	S-6	170	45	7	100	450	Elect Motor	2
2.6- G119	Bottoms Product	13 CR	1576	150	199	200	750	Elect Motor	2
2.6- G120	Atmos Ovhd Accum Sour Wat	A-7	20	50	2	100	200	Elect Motor	2
CRUDE PRODUCT FRACTIONATION-VACUUM TOWER									
2.6- G121	LVGO Pumparound	C-6	2129	50	107	FV / 100	300	Elect Motor	2
2.6- G122	HVGO Pumparound	13CR Case 25	170	50	12	FV / 100	700	Elect Motor	2
2.6- G123	HVGO Product	13CR Case	120	100	12	FV / 150	650	Elect Motor	2
2.6- G124	Bottoms Product	13CR Case 25	646	100	64	FV / 150	750	Elect Motor	2
2.6- G125	Vacuum Jet Accum Sour Water	A-7	128	50	6	100	150	Elect Motor	2
2.6- G126	Vacuum Jet Accum Product	S-6	7	50	2	100	150	Elect Motor	2

Miscellaneous

Equipment No.	Equipment Description	Flow Rate	Other Design Criteria	Design Conditions Pres (psig)	Design Conditions Temp (°F)
COAL SLURRY PREPARATION					
2.1- T101	Coal Prewetting Feeder		22' X 41' X 31', 82 bhp		
2.1- Y101	Slurry Vortex Mix Tank Mixer		102 bhp		
2.1- Y102	Slurry Surge Tank Mixer		82 bhp		
REACTION SYSTEM					
2.9/2.10	Catalyst Handling System	----------	Proprietary ----------		
CRUDE PRODUCT FRACTIONATION-VACUUM TOWER					
2.6- H101	1st Vacuum Steam Jet	57000 lb/hr	area ratio = 50	200	400
2.6- H102	2nd Vacuum Steam Jet	300 lb/hr	area ratio = 25	200	400

Sheet 6

5.9 Capital Cost Breakdowns

Total field costs and field costs breakdowns for Plant 2 are given below in Table 5.13. Note that field costs do not include home office costs and contingency. The estimated field costs for the whole complex are summarized in Section 9. Moreover, the field costs are for the Nth plant scenario (no spare train).

Table 5.13

Field Costs and Breakdowns for Plant 2 (Coal Liquefaction) 2nd Quarter, 1991

Field Costs	Costs ($1,000)
Major Equipment	263,171
Bulk Materials	213,654
Subcontracts	15,589
Direct Labor	190,730
Distributables (Indirect)	171,657
Total Field Costs	**854,800**

6. PLANT 3

6. Plant 3 (Gas Plant)

6.1 Design Basis, Criteria and Considerations

The Gas Plant consists of the following sections:

- Absorber/deethanizer
- Lean oil stripper/debutanizer
- Depropanizer
- LPG Merox for propane and butane products
- Makeup lean oil stripper

The Gas Plant will be designed as a one-train unit.

Feed to the Gas plant will be tail gas from the Hydrogen Purification Plant (plant 6). Makeup lean oil is the naphtha product from plant 2. Lean oil purge from the lean oil stripper/debutanizer will be sent to the Naphtha Hydrotreater (plant 4). Lean oil stripper offgas is returned to plant 6 for treating.

The products from the Gas Plant include:

- C_3 LPG
- C_4 LPG
- Fuel Gas

The specifications for the two LPG products are as follows:

Specification	C_3 LPG Max.	C_4 LPG Max.
Ethane (vol.%)	2.0	--
Propane (vol.%)	--	2.0
Butane (vol.%)	2.0	--
Pentane (vol.%)	--	2.5
Mercaptans (wt.ppm)	20	20

Design Considerations

Lean oil absorption was selected as the method to recover light hydrocarbons from the miscellaneous gas streams being sent to the fuel gas system because of the high recovery of propane and butanes, smaller equipment sizes, and recovery without the need for a refrigeration system. The lean oil absorber and rich oil deethanizer operations were combined into a single tower to reduce capital and operating costs.

Naphtha product from the Coal Liquefaction Plant is used as the lean oil makeup. Because the makeup rate is close to the plant 2 production rate, the total naphtha stream is sent to the Gas Plant. The lean oil purge (Stripper/Debutanizer bottoms) is the feed to the Naphtha Hydrotreater. This scheme simplifies the operation of the system and reduces the amount of light components in the feed to plant 4. The makeup lean oil is stripped prior to entering the absorption system to remove ammonia and acid gases to avoid contamination of LPG products or fuel gas and light hydrocarbons.

Some pentanes are lost to fuel gas in the absorber overhead vapor stream due to vapor-liquid equilibrium. A refrigerated cooler would be required to recover this lost material; however, little additional propane recovery would be made since the recovery rate is already quite good.

Plant 3 was modeled using the PROCESS simulation software. Equipment was sized based on these simulations.

6.2 Process Description

As pointed out earlier, the plant consists of five sections. These are: Absorber/Deethanizer, Lean Oil Stripper/Butanizer, Depropanizer, Makeup Lean Oil Stripper and LPG Merox for propane and butane products. The first four sections of this plant are shown in Process Flow Diagram, Figure 6.1 and the Merox section is shown in Process Flow Diagram, Figure 6.2. Each of these sections is described below.

Absorber/Deethanizer

Compressed tail gas from the pressure swing absorption (PSA) unit of the Hydrogen Purification Plant (plant 6) is fed to a combined lean oil absorber/deethanizer tower to recover the propane and heavier liquids in the stream. The tower is operated at 160 psig. The tower has a reboiler to strip the ethane and lighter components from the rich oil exiting the bottom of the tower. The overhead gas is mixed with the recirculated lean oil and the makeup lean oil and sent to a water cooler before entering the precontactor drum. The vapor product is sent directly to the fuel gas system. The liquid from the precontactor is fed to the top tray of the absorber/deethanizer tower. The precontacting operation improves the recovery of propane from fuel gas and reduces the losses of

pentanes in the lean oil to fuel gas by operating the vapor/liquid separation at a lower temperature than available at the top tray of the tower.

Lean Oil Stripper

The lean oil is the naphtha product from plant 2. The plant 2 naphtha contains hydrogen sulfide and ammonia which would contaminate the fuel gas, propane, and mixed butane products. Prior to being sent to the absorber/deethanizer as makeup lean oil, the naphtha is stripped of the contaminants in a stripper tower, which operates as a debutanizer. The stripped gases are sent to the low pressure gas compressor in plant 6 for scrubbing, and recovery of hydrogen and light gases.

Stripper/Debutanizer

Rich oil from the absorber/deethanizer tower is sent to the rich oil stripper tower to remove propane and butanes from the lean oil. The lean oil from the stripper tower is returned to the absorber/deethanizer via heat exchange with the rich oil feed. Some of the recirculated lean oil is purged to the Naphtha Hydrotreater (plant 4) to remove pentane and heavier hydrocarbons recovered from the feed gases and maintain a more consistent lean oil composition.

Depropanizer

The overhead product from the stripper is fed to a depropanizer tower to separate the light hydrocarbons into two LPG products (propane and mixed butanes). The two products are sent to individual Merox units for the removal of trace sulfur compounds prior to being sent to product storage.

Merox Treating

The Merox units remove mercaptan sulfur compounds from the LPG products (propane and mixed butanes) by dissolving the compounds in a 20° Baume caustic soda solution. This is accomplished in a multistage, vertical Merox extraction. A caustic prewash of 10° Baume solution is required to remove any remaining hydrogen sulfide from the feed stream before entering the extraction tower. The mercaptan-rich caustic solution from the bottom of the extraction towers of the two Merox units flow to the common regeneration section through a small steam heater. The caustic stream is regenerated with air in the presence of a catalyst, where the mercaptans are converted to disulfides. The caustic stream is returned to the Merox units, and the disulfide stream is sent to the Naphtha Hydrotreater feed for disposal.

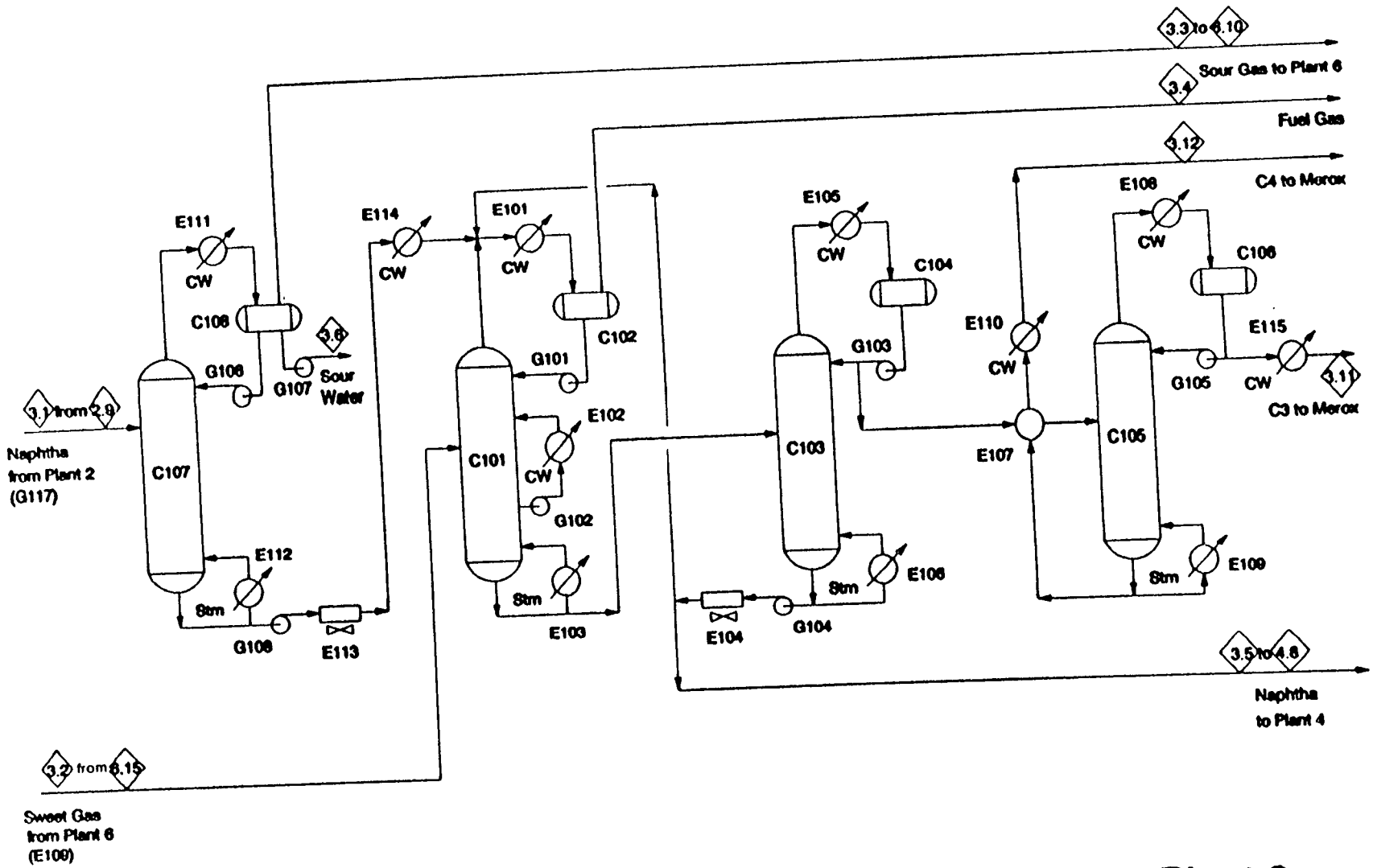

Plant 3
Gas Plant

Figur 6.1 **Process Flow Diagram**

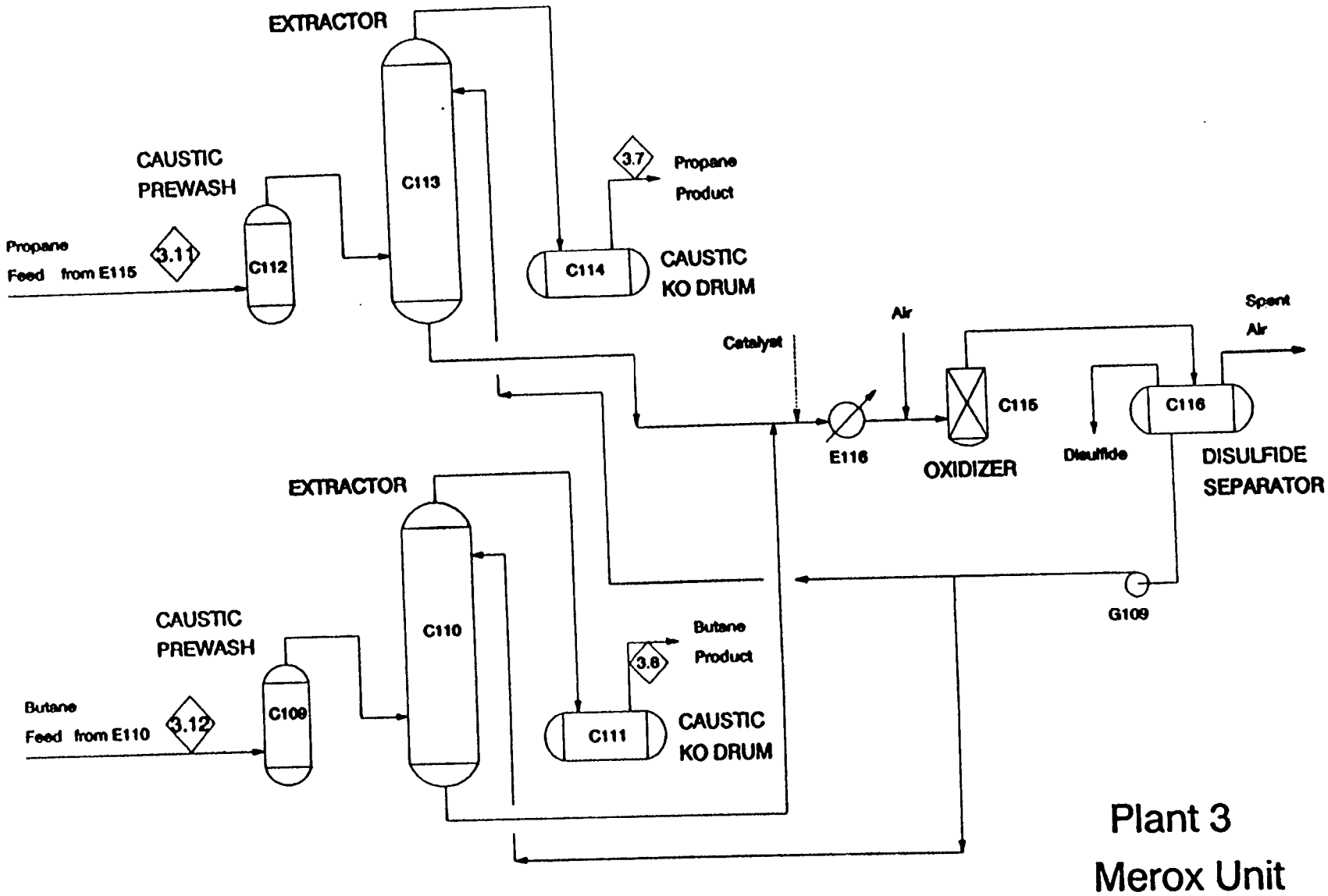

Figur 6.2 **Process Flow Diagram**

6.3 Material Balanc

The material balance for this plant is shown in table 6.1 on the next page. The plant is designed to have a single train.

TABLE 6.1
Improved Baseline Case

Plant 3
Material Balance

	PLANT INPUT			PLANT OUTPUT						
COMPONENTS	PLT 2 NAPHTH #/hr	PSA TG FR PLT 6 #/hr	TOTAL INLET #/hr	LO OH GA TO PLT 6 #/hr	FUEL GAS #/hr	C3 PROD #/hr	C4 PROD #/hr	NAPH TO PLT 4 #/hr	SOUR WATER #/hr	TOTAL OUTLET #/hr
N2		1448	1448		1448					1448
H2		2740	2740		2740					2740
H20	88	1254	1342	48	348	4			942	1342
H2S	128	6	134	128	4					132
NH3	32		32	32						32
CO		1376	1376		1376					1376
CO2			0							0
C1	8	30254	30262	6	30256					30262
C2	100	28262	28362	98	27784	480				28362
C3	676	27866	28542	674	24	27558	286			28542
C4	1444	18732	20176	1294	134	552	17984	212		20176
C5-350	154212	44392	198604	1150	7024		364	190066		198604
350-450	1824	1	1825		2			1824		1826
450-650		1	1					2		2
650-850			0							0
850-1000			0							0
1000+			0							0
PHENOLS			0							0
MEA		6	6					6		6
UNCONVERTED COAL			0							0
ASH			0							0
TOTAL	158512	156338	314850	3430	71140	28594	18634	192110	942	314850

6.4 Utility Summary

The utility summary for the gas plant (Plant 3) is included in Table 6.2.

Table 6.2

Utility Summary

Steam, lb/hr	
600 psig	279,468
50 psig	15,096
Electricity, kw	502
Cooling Water, gpm	9,784
Fuel Gas Production, MMBTU/hr	1,504

6.5 Water Summary

Sour Water = 2 gpm

6.6 Catalyst and Chemical Summary

Catalyst and chemicals requied for Plant 3 are shown below:

Catalyst or Chemical	MEA
Quantity required for start up	90 bbl
Consumption	18 gal/day

6.7 Operating and Manpower Requirements

The operating manpower requirement for this plant is 4 operators. For full manpower requirements of this plant as well as the complex, refer to Section 15 of this report.

6.8 Major Equipment Summary

The overall major equipment for the gas plant is shown in Table 6.3.

Table 6.3 Major Equipment Summary

IMPROVED BASELINE CASE

Plant 3 - Gas Plant

Reactors and Vessels

Equipment No.	Equipment Description	Length (T-T in ft.)	Diameter (ID in ft.)	Material	Design Conditions Pres (psig)	Design Conditions Temp (°F)	Orientation	Comments
3.1- C102	Abs/Deeth Ovhd Precontactor	44.5	13.5	A-516	250	150	Horizontal	
3.2- C104	Lean Oil Stripper Ovhd Accum	34.0	10.0	A-516	200	150	Horizontal	
3.3- C106	Depropanizer Ovhd Accum	23.5	7.0	A-516	350	150	Horizontal	
3.1- C108	LO Makeup Strp Ovhd Accum	21.0	6.5	A-516	100	150	Horizontal	Boot: 1.5'D x 4.5'

Towers

Equipment No.	Equipment Description	Height (T-T in ft.)	Diameter (ID in ft.)	Material	Design Conditions Pres (psig)	Design Conditions Temp (°F)	No. of Trays	Type of Trays
3.1- C101	Absorber/Deethanizer	100	11.5	A-516	250	400	48	Valve
3.2- C103	Lean Oil Stripper	100	12.5	A-516	200	500	44	Valve
3.3- C105	Depropanizer	100	7.0	A-516	350	250	48	Valve
3.1- C107	Lean Oil Makeup Stripper	20	9.5	A-516	100	400	10	Valve

Note: The equipment shown is for a single train design.

Tabl 6.3 Major Equipment Summary - continued

Heat Exchangers

Equipment No.	Equipment Description	Duty (MM Btu/hr)	Type of Exchanger	No. Shells/ Area/Shell (sq ft)	Design Conditions Tube P/T (psig/°F)	Design Conditions Shell P/T (psig/°F)	Material of Construction Tube	Material of Construction Shell	Air-Fi BHP
3.1- E101	Absorb/Deeth Ovhd Cooler	14.0	Shell & Tube	1/ 9570	100 / 150	250 / 150	CS	CS	
3.1- E102	Absorb/Deeth Intercooler	3.2	Shell & Tube	1/ 2840	100 / 150	250 / 150	CS	CS	
3.1- E103	Absorb/Deeth Reboiler	154.6	Kettle	1/ 13040	700 / 550	250 / 400	CS	CS	
3.2- E104	Lean Oil Cooler	166.4	Air-Fin	1/ 22930	200 / 500	10 / 250	CS		240
3.2- E105	Lean Oil Str Ovhd Condenser	63.0	Shell & Tube	1/ 22150	100 / 150	200 / 150	CS	CS	
3.2- E106	Lean Oil Str Reboiler	87.2	Kettle	1/ 15870	700 / 550	200 / 500	CS	CS	
3.3- E107	Depropanizer Feed/Btms Exch	1.6	Shell & Tube	1/ 400	350 / 250	350 / 200	CS	CS	
3.3- E108	Depropanizer Ovhd Condenser	14.4	Shell & Tube	1/ 5940	100 / 150	350 / 150	CS	CS	
3.3- E109	Depropanizer Reboiler	15.6	Kettle	1/ 2320	100 / 350	350 / 250	CS	CS	
3.3- E110	Depropanizer Btms Cooler	1.0	Shell & Tube	1/ 390	100 / 150	350 / 200	CS	CS	
3.1- E111	LO Makeup Strp Ovhd Cond	20.0	Air-Fin	1/ 6860	100 / 250	10 / 250	CS		80
3.1- E112	LO Makeup Strp Reboiler	42.0	Kettle	1/ 4390	700 / 550	100 / 400	CS	CS	
3.1- E113	LO Makeup Strp 1st Btms Clr	22.2	Air-Fin	1/ 3670	300 / 400	10 / 250	CS		80
3.1- E114	LO Makeup Strp 2nd Btms Clr	2.4	Shell & Tube	1/ 1550	100 / 150	250 / 150	CS	CS	
3.3- E115	Depropanizer Ovhd Cooler	0.8	Shell & Tube	1/ 440	100 / 150	350 / 150	CS	CS	

Pumps

Equipment No.	Equipment Description	Flow Rate (gpm)	Delta Pres (psi)	Brake Horsepower	Design Conditions Pres (psig)	Design Conditions Temp (°F)	Driver	# Required	Mat'l
3.1- G101	Absorb/Deeth Precontact Liq	2520	50	110	300	150	Elect Motor	2	CS/CI
3.1- G102	Intercooler Pumparound	3670	50	110	300	150	Elect Motor	2	CS/CI
3.2- G103	Lean Oil Strp Reflux	1770	170	250	400	150	Elect Motor	2	CS
3.2- G104	Lean Oil Circulation	2010	65	110	250	150	Elect Motor	2	CS/CI
3.3- G105	Depropanizer Reflux	400	50	18	400	150	Elect Motor	2	CS
3.1- G106	LO Makeup Strp Reflux	280	50	12	150	150	Elect Motor	2	CS
3.1- G107	LO Makeup Strp Sour Water	10	10	2	100	150	Elect Motor	2	CS
3.1- G108	LO Makeup Strp Btms	520	190	90	300	400	Elect Motor	2	CS/CI

Sheet 2

6.9 Capital Cost Breakdowns

Total field costs and the field costs breakdowns for plant 3 are given below in Table 6.4. Note that field costs do not include home office and contingency costs. The estimated field costs for the whole complex are summarized in Section 9. Moreover, the field costs are for the Nth plant scenario (no spare train).

Table 6.4

Field Costs and Breakdowns
Plant 3 (Gas Plant)
2nd Quarter, 1991

Field Costs	**Costs ($1,000)**
Major Equipment	7,742
Bulk Materials	5,410
Subcontracts	840
Direct Labor	5,037
Distributables (Indirect)	4,571
Total Field Costs	**23,600**

7. PLANT 4

7. Plant 4 (Naphtha Hydrotr at r)

7.1 Design Basis, Criteria and Considerations

The Naphtha Hydrotreater will be designed as a one-train unit.

Feed to the Naphtha Hydrotreater is the naphtha (C_5-350°F) product from the atmospheric fractionator tower at the Coal Liquefaction Plant (plant 2) via the Gas Plant (plant 3). An additional stream from the Gas Oil Hydrotreater (plant 5) is sent to the downstream section (Stabilizer) of the Naphtha Hydrotreater (plant 4).

The Naphtha Hydrotreater design is based on the following criteria:

Reactor Inlet Pressure, psig	1,000
Reactor Outlet Pressure, psig	950
Hydrogen Partial Pressure, psia (outlet of reactor)	700
Reactor Inlet Temperature, °F	525
Reactor Outlet Temperature, °F	575
Chemical Hydrogen Consumption, SCF/B	125
LHSV, V/V/hr	2.0
Catalyst Type	NiMo

The Naphtha Hydrotreater product characteristics are given in Table 7.1 below:

Table 7.1

Naphtha Hydrotreater Product Characteristics

	C_5-350°F
Gravity, °API	52.2
Distillation, TBP °F	
IBP	72
5% (wt.)	110
10%	138
30%	207
50%	246
70%	284
90%	328
95%	340
EP	344
Sulfur, wppm (maximum)	1.0*
Nitrogen, wppm (maximum)	0.2*

*Note: When the nitrogen specification is achieved at 0.2 wppm. The sulfur level will go down further (0.1 wppm).

Design Considerations

Because the Naphtha Hydrotreater is a vapor phase reaction, only cold separators (both high pressure and low pressure) are included in the design of the plant.

The naphtha stream from the Gas Oil Hydrotreater is sent directly to the Plant 4 fractionator because it already has been treated at more severe conditions than those in the Naphtha Hydrotreater.

The fractionator was designed to use 600 psig steam for the reboiler because the bottoms temperature is 450°F. The design consideration also reduces capital costs.

7.2 Process Description

The Plant includes two distinct sections. These are: 1) Reaction and Primary Separation section and 2) Product Distillation section. Figure 7.1 is the Process Flow Diagram of the Plant.

Reaction and Primary Separation Section. Feed is pumped from intermediate tankage directly to heat exchange with the reactor effluent (E101). Hydrogen is then mixed with the heated feed prior to entering the reactor feed preheater (F101), where the mixture is raised to the reactor inlet temperature. The feed/hydrogen mixture enters the fixed bed reactors (C101 and C102), which operate at a pressure of 1000 psig. The reactor effluent passes through heat exchange with the cold feed (E101), through an air-fin cooler (E102), and to the high pressure separator (C103). Wash water is injected into the reactor effluent line prior to the air-fin cooler for control of ammonium salts. Hydrogen rich vapor is compressed in K101 and returned to the front end of the unit to mix with makeup hydrogen and the unit feed. A purge gas stream is sent to Plant 6 to remove light hydrocarbons from the system. Sour water is removed from the high pressure separator to be eventually sent for ammonia recovery. The hydrocarbon liquid is flashed to 185 psig in the low pressure separator (C105) to remove light hydrocarbons, which are sent to Plant 6. The low pressure separator liquid is then sent to product distillation.

Product Distillation. The low pressure separator liquid is preheated with the product from the fractionator in exchanger E105 before entering the tower (C106). The overhead vapor from the tower is partially condensed and only a vapor product is withdrawn for further processing at Plant 6. The fractionator has a steam-heated reboiler (E104). The bottoms naphtha product is cooled in exchangers (E105 and E106) and sent to product storage.

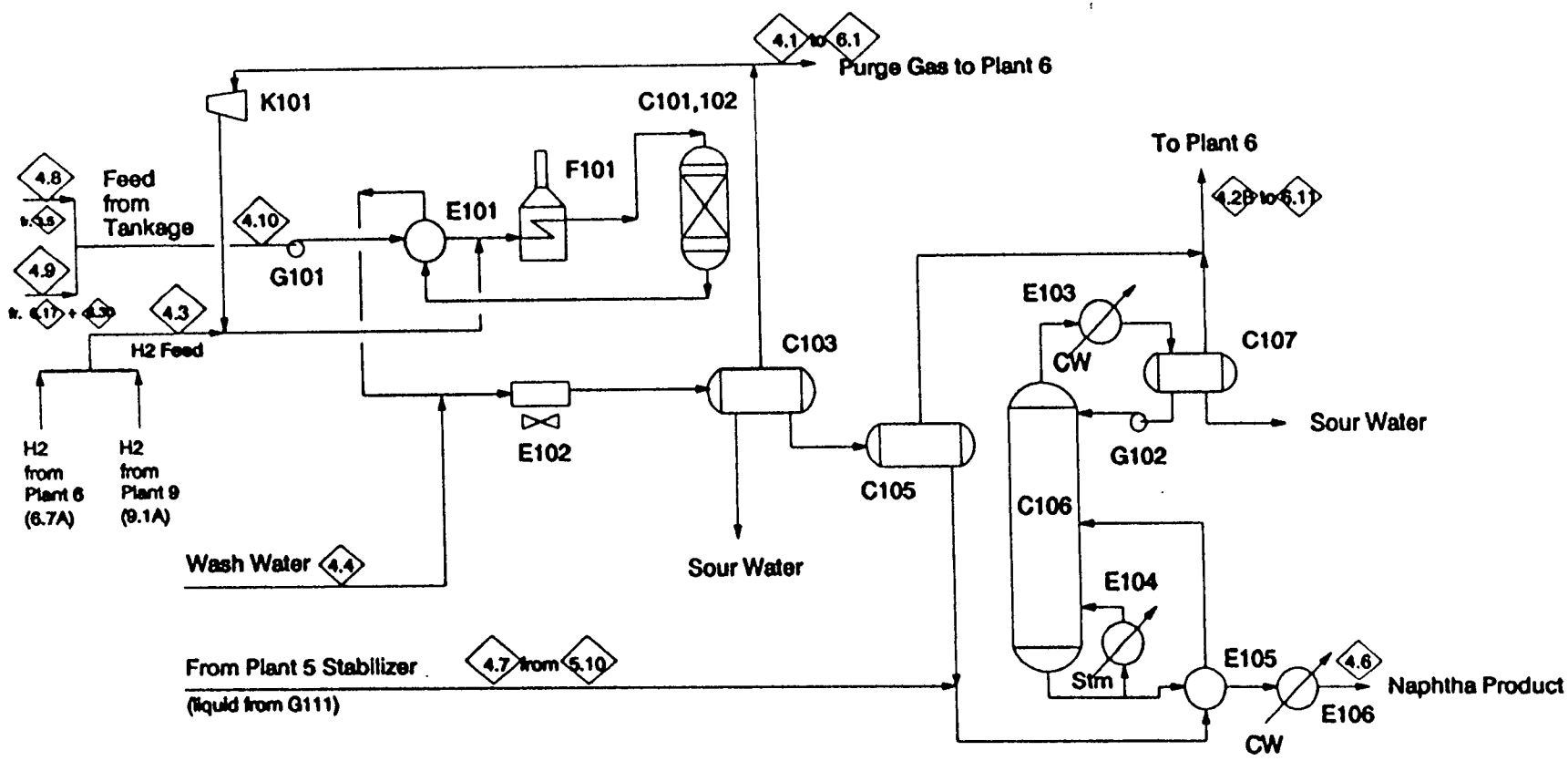

Notes: (1) Combined sour water rat is represented by 4.5

Plant 4
Naphtha Hydrotreater

Figur 7.1 Process Flow Diagram

7.3 Mat rial Balance

Material balance for Plant 4 is shown in Table 7.2. It is designed for a single train plant.

Table 7.2
Material Balance
Plant 4

Improved Baseline Case

PLANT INPUT

COMPONENTS	NAPH FR PLT 3 #/hr	PLT 6 KO LIQ #/hr	NAPH FR PLT 5 #/hr	MU H2 FR PLT 6 #/hr	MU H2 FR PLT 9 #/hr	WASH WATER #/hr	RXN DELTA #/hr	TOTAL INLET #/hr
N2					18			18
H2				236	1232		-488	980
H20		1	6			18800	413	19220
H2S							76	76
NH3			5				70	75
CO								0
CO2								0
C1		4	1	13			980	998
C2		16	14				687	717
C3		48	113				655	816
C4	212	84	306				2515	3117
C5-350	190065	3374	12910				-4546	201803
350-450	1824	8	250				-73	2009
450-650	2	426					-260	168
650-850		8					-6	2
850-1000								0
1000+								0
PHENOLS								0
MEA	6	18					-24	0
UNCONVERTED COAL								0
ASH								0
TOTAL	192109	3987	13605	249	1250	18800	-1	229999

PLANT OUTPUT

COMPONENTS	H2 PURGE #/hr	GAS TO PLT 6 #/hr	NAPHTHA PROD #/hr	SOUR WATER #/hr	TOTAL OUTLET #/hr
N2	14	4			18
H2	820	160			980
H20	24	45		19151	19220
H2S	3	40		34	77
NH3	1	47		26	74
CO					0
CO2					0
C1	484	513			997
C2	128	589			717
C3	51	765			816
C4	91	2722	304		3117
C5-350	508	500	200796		201804
350-450			2009		2009
450-650			168		168
650-850			2		2
850-1000					0
1000+					0
PHENOLS					0
MEA					0
UNCONVERTED COAL					0
ASH					0
TOTAL	2124	5385	203279	19211	229999

7.4 Utility Summary

The utility summary for this plant is included in Table 7.3.

Table 7.3

Utility Summary
Plant 4

Steam, lbs/hr 6000 psig	90,386
Electricity	1,198
Cooling Water, gpm	7,080
Fluid gas, MMSCFD	1.7

Note: Fuel gas consumption is based on a heating value of 1000 Btu/SCF.

7.5 Water Summary

Table 7.4 below presents the water balance for the Naphtha Hydrotreater.

Table 7.4

Water Summary
Plant 4

Water Inlet	lb/hr
Feed	7
Produced in Reactors	413
Wash Water	18,800
TOTAL	19,220
Water Outlet	
Sour Water to NH_3 Recovery	19,151
Hydrogen Purge	22
Low Pressure Gases to Plant 6	45
Products	0
TOTAL	19,220
Sour Water to NH_3 Recovery, gpm	38

7.6 Catalyst and Chemical Summary

Catalyst and chemicals requirements for this plant are shown below:

Quantity required for start up	72,000 lb
Estimated catalyst life	3 years

7.7 Operating Manpower Requirements

The operating manpower requirement for this plant is 4 operators. For full manpower requirements of this plant as well as the entire complex, refer to Section 15 of this report.

7.8 Major Equipment Summary

The major equipment for the naphtha hydrotreater (Plant 4) is summarized in Table 7.5. Because the design of the plant is for a single train, the summary is for a single train plant.

Table 7.5

MAJOR EQUIPMENT SUMMARY
IMPROVED BASELINE CASE

Plant 4 - Naphtha Hydrotreater

Reactors and Vessels

Equipment No.	Equipment Description	Length (T-T in ft.)	Diameter (ID in ft.)	Material	Design Conditions Pres (psig)	Design Conditions Temp (°F)	Orientation	Comments
4.1- C101	Hydrotreater Reactor	27.5	7.5	A-516	1100	650	Vertical	
4.1- C102	Hydrotreater Reactor	27.5	7.5	A-516	1100	650	Vertical	
4.1- C103	High Pressure Separator	27.0	8.5	A-516	1000	150	Horizontal	Boot: 3'D X 4'
4 1- C104	Compressor Knockout Drum	8.0	4.5	A-516	1000	150	Vertical	
4.1- C105	Low Pressure Separator	22.5	7.0	A-285	250	150	Horizontal	
4.2- C107	Fractionator Ovhd Accum	23.0	7.0	A-285	200	150	Horizontal	Boot: 2'6"D X 4'
4.1- C108	Wash Water Drum	12.0	3.0		10	150	Horizontal	
4.1- C109	Sour Water Drum	12.0	3.0		50	150	Horizontal	

Towers

Equipment No.	Equipment Description	Height (T-T in ft.)	Diameter (ID in ft.)	Material	Design Conditions Pres (psig)	Design Conditions Temp (°F)	No. of Trays	Type of Trays
4.1- C106	Fractionator	40	Trays 1-7: 6.5'	A-285	200	450	7	Valve
			Trays 8-10: Trans 6.5' X 7'				3	Valve
			Trays 11-19: 7'				9	Valve

Note: The equipment shown is for a single train.

Sheet 1

Tabl 7.5

PLANT 4 MAJOR EQUIPMENT SUMMARY - continued

Fired Heaters

Equipment No.	Equipment Description	Absorbed Duty (MM Btu/hr)	Fired Duty (MM Btu/hr)	Type of Heater	Tube Material	Design Conditions Pres (psig)	Design Conditions Temp (°F)
4.1- F101	Reactor Feed Preheater	62.1	68.3			1150	550

Heat Exchangers

Equipment No.	Equipment Description	Duty (MM Btu/hr)	Type of Exchanger	No. Shells/ Area/Shell (sq ft)	Design Conditions Tube P/T (psig/°F)	Design Conditions Shell P/T (psig/°F)	Material of Construction Tube	Material of Construction Shell	Air-Fi BHP
4.1- E101	Reactor Feed/Effluent Ex	20.6	Shell & Tube	1/ 1702	1050 / 600	1150 / 350	CS	CS	
4.1- E102	Reactor Effluent Cooler	72.0	Air-Fin	1/ 10964	1050 / 400	10 / 250	CS		160
4.2- E103	Fractionator Condenser	16.6	Shell & Tube	1/ 3823	100 / 150	200 / 200	CS	CS	
4.2- E104	Fractionator Reboiler	18.6	Kettle	1/ 4863	650 / 550	200 / 450	CS	CS	
4.2- E105	Fractionator Feed/Bottoms Ex	33.8	Shell & Tube	1/ 21834	250 / 450	200 / 450	CS	CS	
4.2- E106	Fract Bottoms Prod Cooler	5.0	Shell & Tube	1/ 2455	100 / 150	200 / 200	CS	CS	

Compressors

Equipment No.	Equipment Description	Flow Rate (M lb/hr)	Flow Rate (MMSCFD)	Brake Horsepower	Design Conditions Pres Inlet (psig)	Design Conditions Pres Outlet (psig)	Design Conditions Temp (°F)	Driver
4.1- K101	Recycle Hydrogen	14.8	35.0	392	915	1075	170	Elect Motor

Sheet 2

Table 7.5

PLANT 4 MAJOR EQUIPMENT SUMMARY - continued

Pumps

Equipment No.	Equipment Description	Flow Rate (gpm)	Delta Pres (psi)	Brake Horsepower	Design Conditions Pres (psig)	Design Conditions Temp (°F)	Driver	# Required
4.1- G101	Reactor Charge Pump	512	1035	372	1150	150	Elect Motor	2
4.2- G102	Fractionator Reflux Pump	442	55	18	250	150	Elect Motor	2
4.1- G103	Sour Water Drum Pump	45	35	2	100	150	Elect Motor	2
4.1- G104	Wash Water Pump	40	950	30	1050	150	Elect Motor	2

7.9 Capital Cost Breakdowns

Total field costs and the field costs breakdowns for Plant 4 are given below in Table 7.6. Note that field costs do not include home office costs and contingency. The estimated field costs for the whole complex are summarized in Section 9. Moreover, the field costs are for the Nth plant scenario (no spare train).

Table 7.6
Field Costs and Breakdowns
Plant 4 (Naphtha Hydrotreater)
2nd Quarter, 1991

Field Costs	Costs ($1,000)
Major Equipment	4,533
Bulk Materials	3,051
Subcontracts	436
Direct Labor	2,964
Distributables (Indirect)	2,615
Total Field Costs	**13,600**

8. PLANT 5

8. Plant 5 (Gas Oil Hydrotreater)

8.1 Design Basis Criteria and Considerations

The Gas Oil Hydrotreater is designed as a one-train unit.

Feeds to the Gas Oil Hydrotreater are the distillate sidestream from the atmospheric tower and the overhead liquid and the upper sidestream from the vacuum tower of the Coal Liquefaction (plant 2). The three products (350-450°F, 450-650°F, and 650-850°F) are separated in a fractionator on the back-end of the unit.

Characteristics of the three feeds from Coal Liquefaction are presented in Table 8.1 below:

Table 8.1

Feeds to the Gas Oil Hydrotreater

	Atmospheric Sidestream	Vacuum Overhead	Vacuum Upper SS
Feed Rate, BPSD	19,582	34	23,842
Gravity, °API	17.9	21.0	9.0
Product Cuts (wt.%)			
C_6-350°F	1.7	4.4	
350-450°F	24.7	50.5	0.1
450-650°F	58.0	45.1	37.3
650-850°F	15.6		62.6

The Gas Oil Hydrotreater design is based on the following criteria:

Reactor Inlet Pressure, psig	2,600
Reactor Outlet Pressure, psig	2,500
Hydrogen Partial Pressure, psia (outlet of reactor)	1,800
Reactor Inlet Temperature, °F	600
Reactor Outlet Temperature, °F	750
Chemical Hydrogen Consumption, SCF/B	1,080
LHSV, V/V/hr	1.0
Catalyst Type	NiMo

The Gas Oil Hydrotreater product characteristics are given in Table 8.2 below:

Table 8.2

Products from the Gas Oil Hydrotreater

	350-450°F	450-650°F	650-850°F
Gravity, °API	29.9	17.3	10.5
Distillation, TBP °F			
IBP	340	414	640
5% (wt.)	348	463	645
10%	358	469	665
30%	376	531	676
50%	399	576	717
70%	414	619	759
90%	433	645	815
95%	449	655	835
EP	465	665	838
Sulfur wppm	20	20	20
Nitrogen wppm	500	500	500

Design Considerations

Three final products (350-450°F, 450-650°F, and 650-850°F) were combined for hydrotreating in the same unit because:

- The reactions conditions recommended are approximately the same for the two heavier products and the amount of the lighter product is relatively small.
- Significant savings in capital cost and operating cost are realized by hydrotreating in a common unit even though the final fractionation is more complex.
- The initial fractionation in the plant 2 (Coal Liquefaction Plant) can be made as rough cuts, and thus, save capital and operating costs.

The reaction system was designed with two parallel reactors. Because of the reaction conditions, the reactors were designed with two catalyst beds and an interbed hydrogen quench.

The separation system was designed with high and low pressure systems, each with hot and cold separators. There was no incentive for a warm separator as in Plant 2. The letdown from the high pressure to the low pressure systems is done through an expander turbine to improve the efficiency of the process. The expander was designed to drive the reactor feed booster pump.

It is very difficult to fractionate all three products on the same tower; therefore, the 450°F-material was taken overhead in the fractionator to a small outboard stabilizer tower to make the front-end cut on the 350-450°F product. There is no problem fractionating the 450-650°F cut as a sidestream product or the 650-850°F as a bottoms product.

8.2 Process Description

This Plant consists of two sections. These are: 1) Reaction and Separation section and 2) Product Distillation section. Figure 8.1, the Process Flow Diagram, schematically depicts the process. The following process description is broken down in two parts according to the above two sections.

Reaction and Separation Section

Cold feed is pumped from intermediate tankage through heat exchange with the sidestream product of the atmospheric tower of the Coal Liquefaction Plant. Hot feed is pumped from intermediate tankage directly to the Gas Oil Hydrotreater and is mixed with

the preheated cold feed. The mixed feed is pumped up to reactor pressure in the reactor charge pump (G101) driven by an hydraulic expander turbine. The mixed feed is sent through heat exchange with the reactor effluent in E101. Recycle and makeup hydrogen are mixed and heated by heat exchange with the reactor effluent (E102) and followed by a fired heater (F101).

The hydrogen is then mixed with the heated feed prior to entering the fixed bed reactors (C101 and C102), at an inlet pressure of 2600 psig. The reactor effluent passes through sequential heat exchange with the cold feed (E101), hydrogen gas (E102), and the hot low pressure separator liquid (E103) before being sent to the hot high pressure separator (C103). The vapor from the hot high pressure separator is cooled in an air-fin exchanger (E104) and is sent to the cold high pressure separator (C104). Wash water is injected into the reactor effluent line prior to the air-fin cooler for control of ammonium salts. Hydrogen rich vapor from the cold high pressure separator is compressed by K101 and returned to the front end of the unit to mix with makeup hydrogen.

A purge hydrogen stream is sent to Plant 6 to remove light hydrocarbons from the system. Sour water is removed from the cold high pressure separator to be eventually sent for ammonia recovery. The hydrocarbon liquid is sent to the cold low pressure separator (C106). The liquid from the hot high pressure separator is sent to a hydraulic expander turbine (Y101) driving the reactor charge pump before going to the hot low pressure separator (C105). The hot low pressure separator liquid passes through heat exchange with the reactor effluent (E103) and is then sent to product distillation. The hot low pressure separator vapor is cooled in an air-fin exchanger (E105) and sent to the cold low pressure separator (C106). The vapor from this separator is sent to Plant 6, and the liquid is sent to product distillation. Sour water is removed from the cold low pressure separator to be eventually sent for ammonia recovery.

Product Distillation

Liquid from the hot low pressure separator is preheated in exchange with the product fractionator bottoms in E111 and charged as the lower feed to the fractionator (C110). Liquid from the cold low pressure separator is the upper feed to the fractionator. The overhead of the tower has three products: an overhead vapor stream which is sent to Plant 6; an unstabilized liquid product; and a water stream which is recycled to the wash water system. The overhead liquid is sent to an outboard stabilizer (C115) for correcting the initial boiling point of the 350-450°F product. The overhead of the stabilizer has a vapor product which is sent to Plant 6 and a liquid product which is sent to the Naphtha Hydrotreater (Plant 4) product distillation section. The stabilized 350-450°F product is sent to final storage. The sidestream off the main fractionator is steam-stripped (C111) to correct the initial boiling point, cooled, and sent to finished product storage (450-650°F). The bottoms product is sent to heat exchange with the lower feed to the fractionator (E111), cooled in E113, and sent to finished product storage (650-850°F).

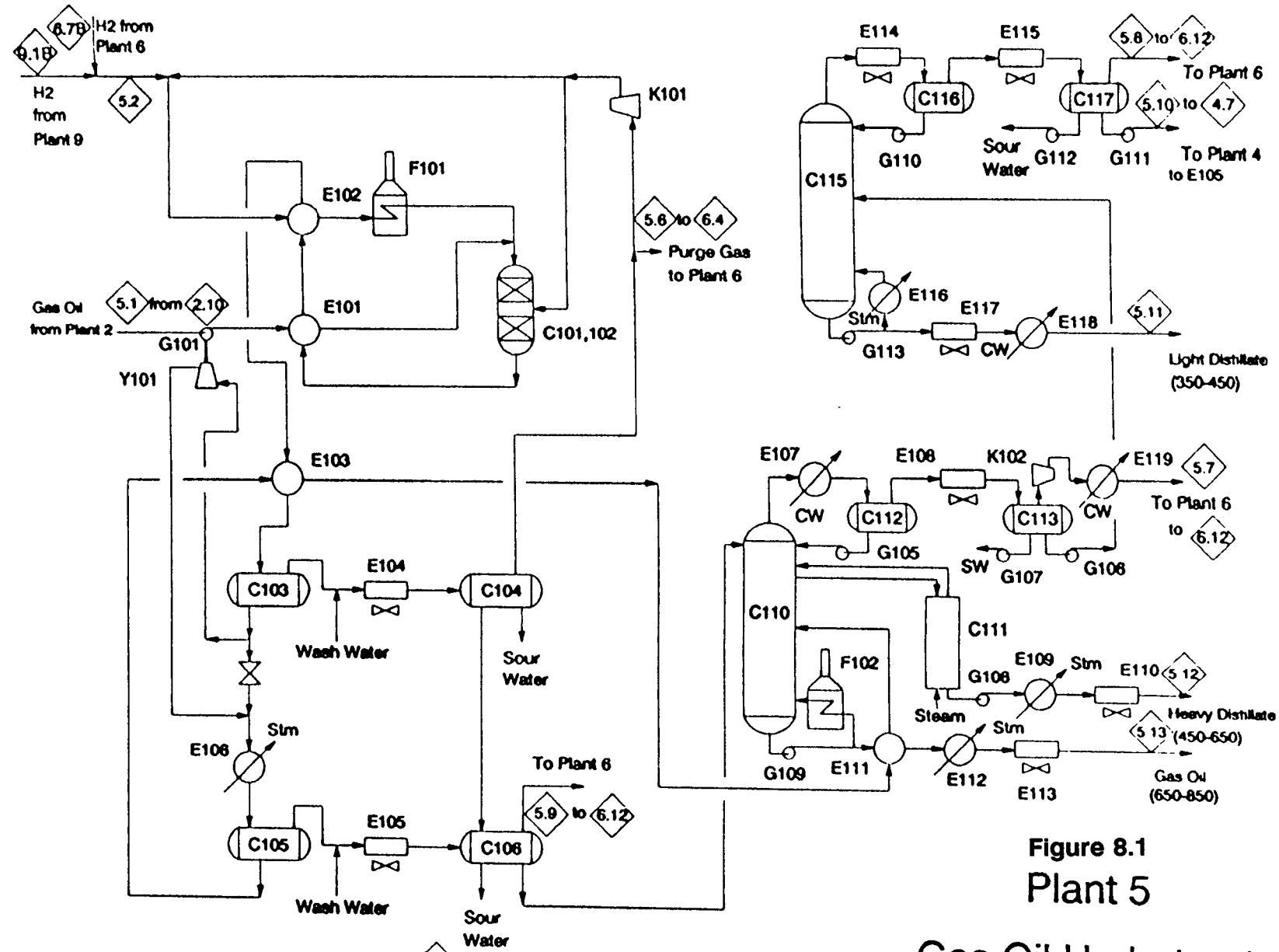

Notes: (1) Combined wash water streams are represented by 5.3
(2) Combined sour water streams are represented by 5.5
(3) Combined steam flow rate is represented by 5.4

Figure 8.1

Plant 5

Gas Oil Hydrotreater

8.3 Material Balance

The material balance for this plant is shown in Table 8.3.

Table 8.3
Plant 5
Material Balance

PLANT INPUT

COMPONENTS	PLT 2 GAS OIL #/hr	MU H2 FR PLT 6 #/hr	MU H2 FR PLT 6 #/hr	STEAM #/hr	WASH WATER #/hr	Rxn Delta #/hr	TOTAL INLET #/hr
N2			198				198
H2		1728	14298			-13704	2322
H20	348			5000	40600	4638	50586
H2S						200	200
NH3						3096	3096
CO							0
CO2							0
C1		95				1820	1915
C2						2046	2046
C3						2426	2426
C4						1744	1744
C5-350	6104					9912	16016
350-450	97488					3488	100976
450-650	467704					1754	469458
650-850	189424					-17314	172110
850-1000	916					-106	810
1000+							0
PHENOLS							0
MEA							0
UNCONVERTED COAL							0
ASH							0
TOTAL	761984	1823	14496	5000	40600	0	823903

PLANT OUTPUT

COMPONENTS	PURGE H2 #/hr	GAS TO PLT 6 #/hr	NAPH TO PLT 4 #/hr	LT DIST #/hr	HY DIST #/hr	GAS OIL #/hr	SOUR WATER #/hr	TOTAL OUTLET #/hr
N2	2	196						198
H2	350	1972						2322
H20	4	836	6		252		49488	50586
H2S		12					188	200
NH3	6	289	5				2797	3097
CO								0
CO2								0
C1	204	1710	1					1915
C2	94	1938	14					2046
C3	70	2243	113					2426
C4	30	1408	306					1744
C5-350	34	2398	12910	256	418			16016
350-450	2	100	250	79466	21154	4		100976
450-650		7		11788	329535	128128		469458
650-850					8900	163210		172110
850-1000						810		810
1000+								0
PHENOLS								0
MEA								0
UNCONVERTED COAL								0
ASH								0
TOTAL	796	13109	13605	91510	360259	292152	52473	823904

8.4 Utility Summary

The utility summary for the gas oil hydrotreater (Plant 5) is summarized in Table 8.4. The fuel gas requirement shown in this table is based on a heating value of 1000 BTU/SCF.

Table 8.4

Utility Summary
Plant 5

Steam, lbs/hr	
150 psig	-104,578
600 psig	62,030
Electricity, KW	2,147
Cooling Water, gpm	330
Fuel Gas, MMSCFD	8.0

8.5 Water Summary

The water summary for the gas oil hydrotreater (Plant 5) is shown in Table 8.5. All input and output streams are grouped together and shown separately in the same table.

Table 8.5

Water Summary
Plant 5

Water Inlet	lb/hr
Feed	348
Produced in Reactors	4,638
Wash Water	40,600
Steam	5,000
TOTAL	50,586
Water Outlet	
Sour Water to NH_3 Recovery	49,488
Hydrogen Purge	4
Low Pressure Gases to Plant 6	836
Products	258
TOTAL	50,586
Sour Water to NH_3 Recovery, gpm	99

8.6 Catalyst and Chemical Summary

Catalyst and chemicals required for Plant 5 are shown below:

Catalyst or chemical	Catalyst
Quantity required for start up	556,160 lb.
Consumption or estimated life	3 year life

8.7 Operating Manpower Requirements

The operating manpower requirement for this plant is 4 operators. For full manpower requirements of this plant as well as the complex, refer to Section 15 of this report.

8.8 Major Equipment Summary

The major equipment for the gas oil hydrotreater (plant 5) is summarized in Table 8.6. The equipment sizes are for a single train plant.

Table 8.6 Major Equipm nt Summary

IMPROVED BASELINE CASE

Plant 5 - Gas Oil Hydrotreater

Reactors and Vessels

Equipment No.	Equipment Description	Length (T-T in ft.)	Diameter (ID in ft.)	Material	Design Conditions Pres (psig)	Design Conditions Temp (°F)	Orientation	Comments
5.1- C101	Hydrotreater Reactor	39.5	16.0	A-387	2750	850	Vertical	
5.1- C102	Hydrotreater Reactor	39.5	16.0	A-387	2750	850	Vertical	
5.1- C103	Hot High Pressure Separator	30.0	9.0	A-387	2600	550	Vertical	
5.1- C104	Cold High Pressure Separator	20.0	6.0	A-387	2600	150	Horizontal	
5.1- C105	Hot Low Pressure Separator	35.0	10.5	A-285	150	450	Horizontal	
5.1- C106	Cold Low Pressure Separator	17.5	5.5	A-285	150	150	Horizontal	Boot: 1.5'D X 3'
5.1- C107	Wash Water Drum	14.5	4.5	CS	10	150	Horizontal	
5.1- C108	Sour Water Drum	14.5	4.5	CS	50	150	Horizontal	
5.1- C109	H2 Recycle Comp K.O. Drum	11.0	8.5	A-387	2600	200	Vertical	
5.2- C112	Fractionator Ovhd Accum (Hot)	40.5	12.5	CS	10	400	Horizontal	
5.2- C113	Fractionator Ovhd Accum (Cold)	20.5	6.5	CS	10	150	Horizontal	Boot: 3'D X 4'
5.2- C114	Frac Ovhd Vent Comp K.O. Drum	4.0	5.5	CS	10	150	Vertical	
5.2- C116	Stabilizer Ovhd Accum (Hot)	18.5	6.0	CS	50	350	Horizontal	
5.2- C117	Stabilizer Ovhd Accum (Cold)	11.5	3.5	CS	50	150	Horizontal	Boot: 1.5'D X 4'

Towers

Equipment No.	Equipment Description	Height (T-T in ft.)	Diameter (ID in ft.)	Material	Design Conditions Pres (psig)	Design Conditions Temp (°F)	No. of Trays	Type of Trays
5.2- C110	Fractionator	120	20.5	A-285	50	850	60	Valve
5.2- C111	AGO Product Stripper	20	8.0	A-285	50	750	10	Valve
5.2- C115	Distillate Product Stabilizer	60	Trays 1-10: 8.	A-285	50	550	10	Valve
			Trays 11-14:				4	
			Trans 8.5 X 11.0					
			Trays 15-30: 11.0				16	

Tabl 8.6 Major Equipment Summary - continued

Fired heaters

Equipment No.	Equipment Description	Absorbed Duty (MM Btu/hr)	Fired Duty (MM Btu/hr)	Type of Heater	Tube Material	Design Conditions Pres (psig)	Design Conditions Temp (°F)
5.1- F101	Hydrogen Preheater	15.2	19.1		T-347	2850	650
5.2- F102	Fractionator Reboiler	165.4	219.1		T-347	50	850

Heat Exchangers

Equipment No.	Equipment Description	Duty (MM Btu/hr)	Type of Exchanger	No. Shells/ Area/Shell (sq ft)	Design Conditions Tube P/T (psig/°F)	Design Conditions Shell P/T (psig/°F)	Material of Construction Tube	Material of Construction Shell	Air-Fin BHP
5.1- E101	Reactor Effl/Feed Preheater	114.4	Shell & Tube	1/ 10306	2650 / 800	2750 / 650	CS	CS	
5.1- E102	Reactor Effl/H2 Preheater	70.8	Shell & Tube	1/ 6651	2650 / 650	2850 / 550	CS	CS	
5.1- E103	Reactor Effl/HLPS Liquid	22.9	Shell & Tube	1/ 6912	150 / 550	2600 / 600	CS	CS	
5.1- E104	Hot HP Sep Vapor Cooler	126.0	Air-Fin	1/ 16968	2600 / 450	10 / 250	T-316L		200
5.1- E105	Hot LP Sep Vapor Cooler	9.1	Air-Fin	1/ 2372	150 / 300	10 / 250	CS		40
5.1- E106	Hot HP Sep Liq Steam Gen	27.2	Shell & Tube	1/ 10045	200 / 400	150 / 550	ADM	CS	
5.2- E107	Frac Ovhd Cond	80.6	Shell & Tube	1/ 3775	100 / 150	10 / 450	CS	CS	
5.2- E108	Frac Ovhd Vapor Cond	32.4	Air-Fin	1/ 15210	10 / 400	10 / 250	CS		80
5.2- E109	AGO Prod Steam Gen	13.2	Shell & Tube	1/ 3371	200 / 400	100 / 550	ADM	CS	
5.2- E110	AGO Prod Cooler	25.9	Air-Fin	1/ 11420	50 / 450	10 / 250	ADM		80
5.2- E111	Frac Bottoms/Feed Ex	43.8	Shell & Tube	1/ 14966	150 / 800	100 / 600	CS	CS	
5.2- E112	Frac Bottoms Steam Gen	13.9	Shell & Tube	1/ 4239	200 / 400	100 / 550	ADM	CS	
5.2- E113	Frac Bottoms Cooler	37.7	Air-Fin	1/ 10772	50 / 450	10 / 250	CS		120
5.2- E114	Distillate Stabilizer Cond	15.0	Shell & Tube	1/ 1122	100 / 150	50 / 450	CS	CS	
5.2- E115	Dist Stabil Ovhd Vap Cooler	3.0	Air-Fin	1/ 489	50 / 350	10 / 250	CS		40
5.2- E116	Distillate Stabil Reboiler	43.4	Kettle	1/ 12186	650 / 550	50 / 550	CS	CS	
5.2- E117	1st Distillate Prod Cooler	15.2	Air-Fin	1/ 3692	150 / 500	10 / 250	CS	CS	40
5.2- E118	2nd Distillate Prod Cooler	0.9	Shell & Tube	1/ 1329	100 / 150	150 / 150	CS	CS	
5.2- E119	Frac Ovhd Vent Comp Aftercooler	0.5	Shell & Tube	1/ 147	100 / 150	50 / 250	CS	CS	

Sh et 2

Tabl 8.6 Major Equipment Summary - continued

Compressors

Equipment No.	Equipment Description	Flow Rate (M lb/hr)	Flow Rate (MMSCFD)	Brake Horsepower	Design Conditions Pres Inlet (psig)	Design Conditions Pres Outlet (psig)	Design Conditions Temp (°F)	Driver
5.1- K101	Recycle Hydrogen	166.8	220.6	1476	2450	2690	155	Elect Motor
5.2- K102	Fractionator Ovhd Vent	8.1	1.7	83	1	15	190	Elect Motor

Pumps/Expander

Equipment No.	Equipment Description	Flow Rate (gpm)	Delta Pres (psi)	Brake Horsepower	Design Conditions Pres (psig)	Design Conditions Temp (°F)	Driver	# Required
5.1- G101	Reactor Charge	1589	2565	3008	2750	350	Expander	2
5.1- G102	Low Press Wash Water	95	100	9	150	150	Elect Motor	2
5.1- G103	High Press Wash Water	91	2400	170	2650	150	Elect Motor	2
5.1- G104	Sour Water Drum Outlet	114	35	4	100	150	Elect Motor	2
5.2- G105	Fractionator Reflux	1403	100	119	150	400	Elect Motor	2
5.2- G106	Dist Stabilizer Feed	275	20	6	50	150	Elect Motor	2
5.2- G107	Frac Ovhd Sour Water	9	50	2	100	150	Elect Motor	2
5.2- G108	AGO Product	900	145	96	200	550	Elect Motor	2
5 2- G109	Fractionator Bottoms	800	90	60	150	800	Elect Motor	2
5.2- G110	Dist Stabilizer Reflux	271	35	9	100	350	Elect Motor	2
5.2- G111	Stabilizer Ovhd Liquid Prod	38	190	6	250	150	Elect Motor	2
5.2- G112	Stabilizer Ovhd Sour Water	1	40	1	100	150	Elect Motor	2
5.2- G113	Distillate Prod	257257	80	18	150	500	Elect Motor	2
5.1- Y101	Hot HP Sep Liquid Expander	1623	2350	-3008	2600	550	-	1

8.9 Capital Cost Breakdowns

Total field costs and the field costs breakdowns for Plant 5 are given below in Table 8.7. Note that field costs do not include home office costs and contingency. The estimated field costs for the whole complex are summarized in Section 9. Moreover, the field costs are for the Nth plant scenario (no spare train).

Table 8.7

Field Costs and Breakdowns
Plant 5 (Gas Oil Hydrotreater)
2nd Quarter, 1991

Field Costs	**Costs ($1,000)**
Major Equipment	27,783
Bulk Materials	18,933
Subcontracts	3,025
Direct Labor	17,476
Distributables (Indirect)	15,684
Total Field Costs	**82,900**

9. CAPITAL COSTS FOR IMPROVED BASELINE

9. Overall Capital Costs for Improved Baseline

The Nth plant overall capital cost estimates (improved baseline) for the entire complex are presented in this section. The estimate basis, methodology and accuracy are the same as for the baseline case.

The inside battery limits (ISBL) and outside battery limits (OSBL) plant field costs and breakdowns are summarized in Sections 9.1 and 9.2 respectively. These same field costs and breakdowns are given in the appropriate capital cost sections of each plant throughout this report.

Section 9.3 presents the ISBL plants on installed basis. The ISBL installed basis costs includes the following costs:

- Field costs of ISBL plants
- Field costs of OSBL plants
- Home office costs and fees
- A suitable contingency

The above costs, when added together become the total installed cost of the complex. These costs (field costs of OSBL plants, Home office costs and fees and a suitable contingency) have been allocated to the ISBL plants. In this fashion, each ISBL plants cost can now be expressed on "Installed" basis. Such allocation of costs and the resulting installed costs for each plant and for the entire complex are shown in Table 9.3.

This installed cost for the Nth Plant based on second quarter 1991 datum is $3531.9 million dollars. No project escalation is included in this figure for disbursement of this cost over the life of this project. Such escalation will be addressed in the economics section of this report.

9.1 ISBL Plant Field Cost Summaries

The ISBL plant field costs for the entire complex are developed by estimating the field costs of each process plant. The field cost for each plant is comprised of 1) major equipment, 2) bulk materials, 3) subcontracts, 4) direct labor and 5) distributables. Costs data thus developed are shown in Table 9.1.

Table 9.1

IMPROVED BASELINE
Estimated Total Field Costs
for Coal Liquefaction Complex - Process Units (ISBL)
(2nd Quarter 1991 $1000)
Nth Plant

Plant No.	Process Units	Major Equipment	Bulk Materials	Sub-contracts	Direct Labor	Distribu-tables	Total Field Costs
1	Coal Handling	40,116	22,709	---	22,133	19,943	104,900
1.4	Coal Crushing	34,848	21,904	4,978	18,475	16,594	96,800
2	Coal Liquefaction	263,171	213,654	15,589	190,730	171,657	854,800
3	Gas Plant	7,742	5,410	840	5,037	4,571	23,600
4	Naphtha Hydro.	4,533	3,051	436	2,964	2,615	13,600
5	Gas Oil Hydro.	27,783	18,933	3,025	17,476	15,684	82,900
6	H_2 Purification	51,966	26,409	3,067	25,557	23,001	13,000
8	ROSE Unit	12,846	9,882	3,953	7,905	7,115	41,700
9	H_2 From Coal	93,739	72,116	12,192	65,905	59,349	303,300
10	Air SEP	121,152	23,298	19,804	33,783	24,463	222,500
11	Sulfur Plant	17,934	12,271	2,124	12,035	10,737	55,100
38	NH3 Recovery	13,915	11,110	1,459	9,763	8,753	45,000
39	Phenol 11	4,211	4,451	241	3,729	3,368	16,000
	TOTALS	693,956	445,198	67,708	415,492	367,850	1,990,200

9.2 OSBL Plant Field Cost Summaries

The OSBL plant field costs for the entire complex are developed by estimating the field costs of each offsite/utilities plant. The field cost for each plant is comprised of 1) major equipment, 2) bulk materials, 3) subcontracts, 4) direct labor and 5) distributables. Results thus obtained are shown in Table 9.2.

Table 9.2 - continued

IMPROVED BASELINE
Estimated Total Field Costs
for Coal Liquefaction Complex - Offsites/Utilities (OSBL)
(2nd Quarter 1991 $1000)
Nth Plant

Plant No.	Offsite Units	Major Equipment	Bulk Materials	Sub-contracts	Direct Labor	Distribu-tables	Total Field Costs
33	Fire Protection	2700	5300	200	7500	6800	22500
34	Sewage	8461	10924	750	16172	14565	50872
35	Instr/Plant Air	2721	1814	---	2519	2317	9371
36	Flush Oil	1000	7000	---	3800	3400	15200
37	Solid Waste	2400	---	---	---	---	2400
40	Site Dev.	---	---	75000	---	---	75000
41	Buildings/DCS	---	24500	46000	---	---	70500
42	Telecomm	---	2000	---	---	---	2000
	TOTALS FROM PREVIOUS PAGE	250449	146011	19032	118338	106660	640790
	GRAND TOTAL	267,731	197,549	140,982	148,329	133,742	888,333

9.3 Installed Plant Costs

Installed plant costs for the complex were calculated by 1) taking the estimated ISBL plant cost for each ISBL plant, 2) adding to that the respective proportional amount of total OSBL costs and then 3) adding the proportional amount of home offices, engineering fee and contingency. Results are shown in Table 9.3. This table also includes the number of trains (operating and total number) for each plant.

Table 9.3
Nth Plant Capital Costs for the Complex
Improved Baseline

Plant #	No. of Oper. Trains	Total No. of Trains	ISBL Plant Field Costs 1000$	ISBL Plant Cost Adj. with OSBL Costs 1000$	Installed Plant Costs 1000$
1	6	6	104900	1571700	182000
1.4	12	12	96800	140000	171800
2	4	4	854800	1236400	1517000
3	1	1	23600	34100	41900
4	1	1	13600	19700	24100
5	1	1	82900	119900	147100
6	1	1	130000	188000	230700
8	1	1	41700	60300	74000
9	6	6	303300	438700	538200
10	6	6	222500	321800	394800
11	5	5	55100	79700	97800
38	1	1	45000	65100	79900
39	1	1	16000	23100	28400
Total			1990200	2878500	3531900

10. OPTION 6

10. Option 6 (Steam Reforming of Natural Gas Plu FBC Unit for Hydrogen Production)

10.1 Design Basis, Criteria and Considerations

In this option, as discussed earlier, the hydrogen production method is changed from coal gasification (plant 9) to steam methane reforming (plant 9-01).

The following assumptions/design basis were utilized to develop this option:

Ash concentrate from plant 8 (Kerr McGee's ROSE-SR plant) is sent to a Fluidized Bed Combustion (FBC) plant to generate high pressure steam.

The steam reformer produces 99.9% pure hydrogen for the complex. A total of three 150 MMSCFD hydrogen trains are required.

The Fluid Bed Combustor (FBC) and Steam Turbine Generator (STG) are designed so that 50% of the ash concentrate from plant 8 is sent to a single FBC/STG. Therefore, this is a two train FBC/STG system with one additional spare train for plant reliability purpose.

The directly affected plant is, of course, plant 9 and there is an additional FBC plant (in plant 31.4-01) for processing the ROSE-SR bottoms. Indirectly affected plants are plant 1 (Coal Liquefaction Plant), plant 11 (By-Product Sulfur Recovery Plant), plant 31 (Steam and power Generation Plant), plant 34 (Sewage and Effluent Water Treatment Plant), plant 38 (Ammonia Recovery Plant), and plant 39 (Phenol Recovery Plant).

The reformer was developed as a licensed process with limited information supplied by KTI.

10.2 Process Description and Process Flow Diagram for the Directly Affected Plants

Reformer

Natural gas at 50 psig and 100°F is compressed in the natural gas feed compressors to 350 psig. The high pressure gas is combined with 350 psig steam produced with the unit or 600 psig steam, which has been let down to 350 psig, and reformed in a reformer furnace.

The waste heat in the flue gases from the reforming furnace is recovered in a series of heat exchangers, with the flue gases exiting through a stack at about 250°F.

Part of the heat in the reformer product is recovered as 600 psig steam in the waste heat boiler. The reformer product gas is further cooled in the product cooler and combined with steam before entering the shift reactors to provide sufficient steam for shift reaction to occur. The gas and steam mixture pass through beds of high and low temperature shift reactors in series to convert the carbon monoxide to carbon dioxide and hydrogen.

The product from the shift converters is further cooled and sent to Pressure Swing Absorption (PSA) for hydrogen purification. The PSA plants separate the hydrogen from carbon dioxide and other unconverted gas, which are used as fuel. This plant is capable of producing a 99.9% purity hydrogen. The process flow sketch for the Reformer is shown in Figure 10.1.

Fluidized Bed Combustor

As shown in the process flow sketch (Figure 10.2), the fluidized bed combustor boiler feed system conveys ash concentrate from live storage to the boiler feed silos. From these silos the ash concentrate is fed to the fluidized bed combustors.

The fluidized bed combustors are designed to burn 4,400 tons/day of ash concentrate from ROSE-SR plant and to produce steam for power generation. Three identical circulating fluidized bed boilers are provided to supply steam to the turbines. Each boiler is a drum and reheat type, with a balanced draft furnace.

A limestone preparation system is provided to dry and prepare limestone to proper size as required by the boiler manufacturer. Prepared limestone is conveyed pneumatically and fed to the combustor boiler furnace. The limestone injection is used to control sulfur dioxide emissions. The bottom ash is removed from the bottom of the combustor and sent to a silo for truck unloading.

Flue gas exiting from the boilers flows to the cyclones where large size solid particles are removed and recycled back to the furnace. The flue gas from the cyclones flows through the air heater where the primary and secondary air are preheated before flowing to the furnace. The gas leaves the air heater and enters a baghouse. The baghouse is provided for controlling particulate emissions from the boiler.

The flue gas leaves the baghouse and is directed by an induced draft fan to the stack. Fly ash is collected and withdrawn from the baghouse and is sent to a fly ash silo for truck loading.

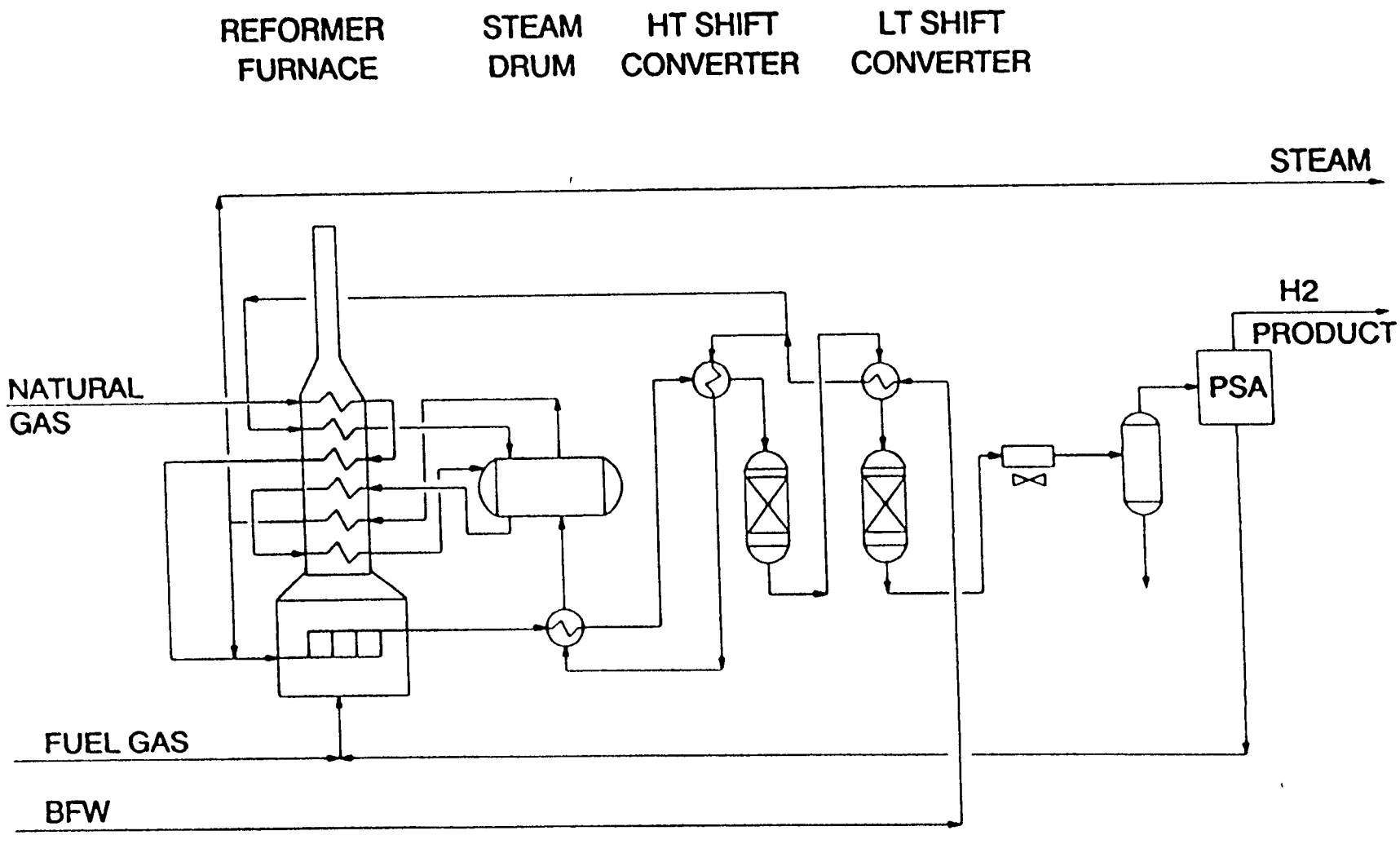

FIGURE 10.1 Plant 9-01

PROCESS FLOW DIAGRAM OF STEAM REFORMER FOR NATURAL GAS

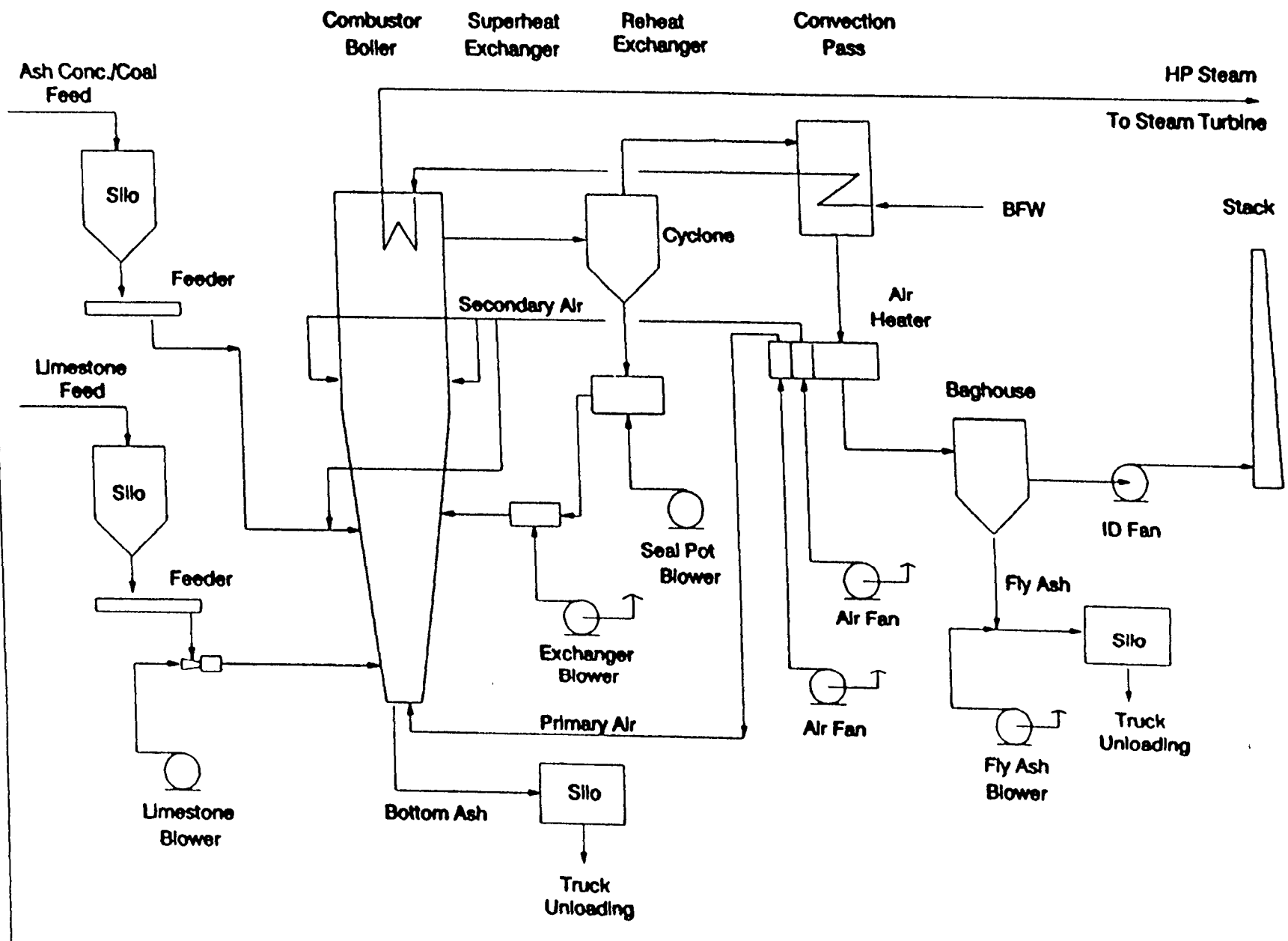

FIGURE 10.2 PROCESS FLOW DIAGRAM FOR FLUIDIZED BED COMBUSTOR

Steam Turbine Generator

The steam turbine generator is shown schematically in Figure 10.3. As shown in this figure, high pressure steam from the fluidized bed combustor (2620 psig) is sent to the high pressure (HP) turbine. The turbine exhaust passes through a desuperheater before entering the intermediate pressure (IP) turbine. High pressure steam let down to 600 psig also passes through a desuperheater before entering the IP turbine. The exhaust from the IP turbine is split and sent to two low pressure (LP) turbines operating in parallel. Each of the LP turbines has a surface condenser on its exhaust. The condenser operates under vacuum (1.0 psia). The condensate is recovered and returned to the deaerators at the boiler feedwater treating area.

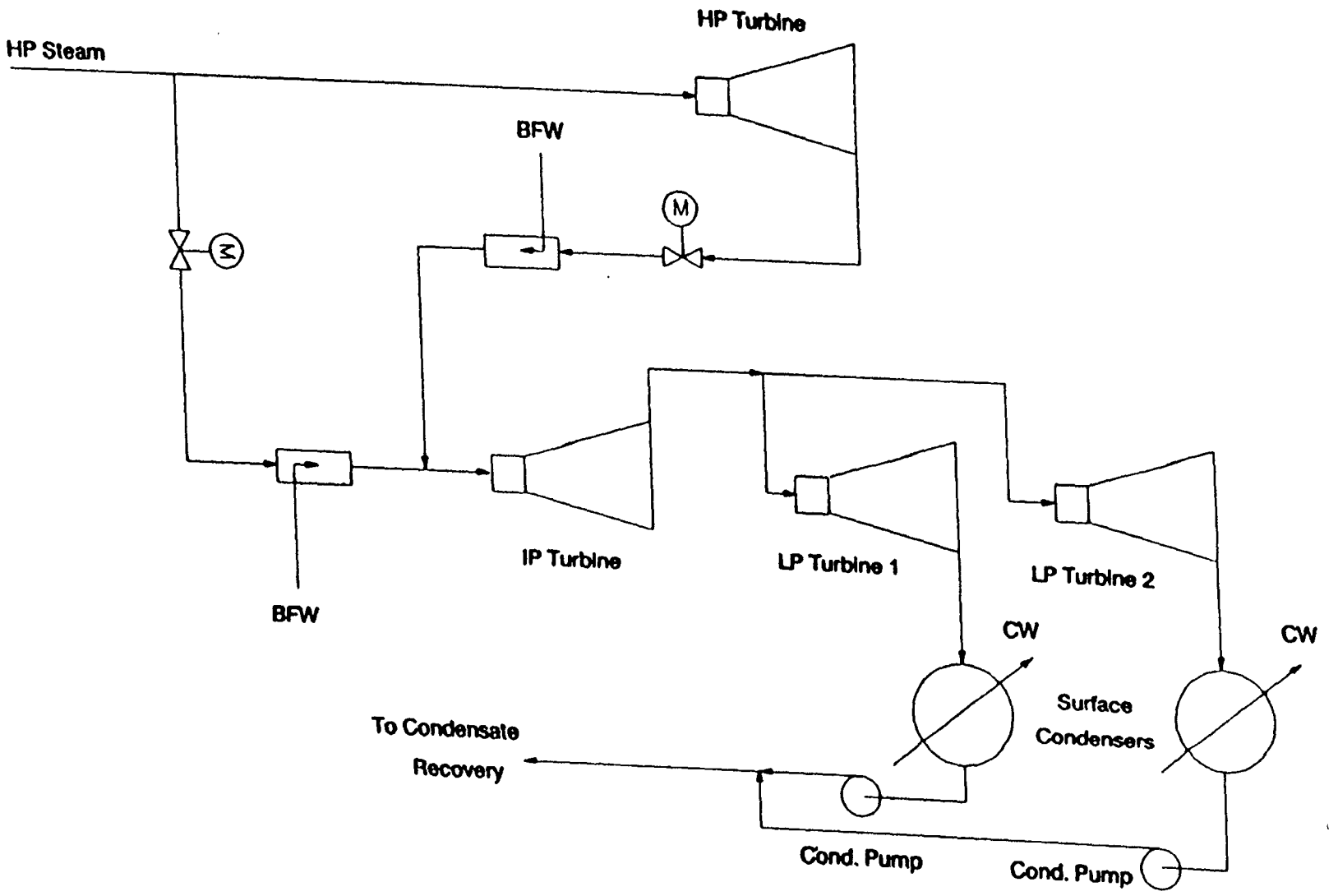

FIGURE 10.3 PROCESS FLOW DIAGRAM OF STEAM TURBINE GENERATOR

PLANT 31.1-01

10.3 Material Balance for the Directly Aff cted Plants

The overall material balance for the Steam Methane Reformer (plant 9-01) and Fluid Bed Combustion unit (plant 31.9) are shown in Tables 10.1 and 10.2, respectively. In addition, the overall material balance for the liquefaction plant, plant 2 is shown in Table 10.3 and Figure 10.4. Plants 3, 4 and 5 were redesigned for one train configuration, the material balances for these three plants are included in this report as Table 10.4, 10.5 and 10.6 respectively.

Table 10.1
Improved Baseline Plus Option 6
Overall Material Balance for Plant 9.01

	Plant Input		
Stream No.	**9.1**	**9.2**	
Components	**Natural Gas Lbs/hr**	**Steam Lbs/hr**	**Total Input Lbs/hr**
H2			116824
H2O		981149	464106
CO			26957
CO2			610761
C1	348853		111354
TOTAL	348853	981149	1330002

	Plant Output			
Stream No.	**9.3**	**9.4**	**9.5**	
Components	**Hydrogen Lbs/hr**	**Offgas Lbs/hr**	**Sour Water Lbs/hr**	**Total Output Lbs/hr**
H2	103578	13266		116824
H2O		34777	429329	464106
CO		26957		26957
CO2		610761		610761
C1	827	110527		111354
TOTAL	104405	796268	429329	1330002

Table 10.2
Improved Baseline Plus Option 6
Overall Material Balance for Plant 31.1 & 31.4

	Plant Input			
Components	**Ash Conc Lbs/hr**	**Limestone 3/hr**	**Air Lbs/hr**	**Total Input Lbs/hr**
N2			2994826	2994826
O2			903924	903924
H2O				
CO2				
850-1000	7884			7884
1000+	93888			93888
CaCO3		47663		47663
CaSO4				
UC Coal	110016			110016
Ash	178224			178224
TOTAL	390012	47663	3898750	4336525

	Plant Output		
Components	**Flue as Lbs/hr**	**Total Solid Lbs/hr**	**Total Output Lbs/hr**
N2	2999328		2999328
O2	319708		319708
H2O	87370		87370
CO2	688816	2305	691121
850-1000			
1000+			
CaCO3			
CaSO4		60774	60774
UC Coal			
Ash		178224	178224
TOTAL	4095222	241303	4336525

TABLE 10.3
Improved Baseline Case Plus Option 6

Plant 2
Material Balance (Per Train)

PLANT INPUT

COMPONENTS	COAL #/hr	MAKEUP H2 #/hr	RECYCLE H2 FR #6 #/hr	WASH WATER #/hr	STEAM #/hr	ROSE EXTRACT #/hr	CRACKED GAS #/hr	RXN DELTA #/hr	TOTAL INLET #/hr
N2									0
H2		22012	4037					-21659	4390
H20	7926		13	225127	96165			31836	361067
H2S								10142	10142
NH3								4779	4779
CO			75					344	419
CO2								688	688
C1		176	1396					6876	8448
C2			619				375	6016	7010
C3			379				183	6017	6579
C4			131				242	3438	3811
C5-350			212					50882	51094
350-450								24961	24961
450-650								117115	117115
650-850						332		47358	47690
850-1000						514	-69	2269	2714
1000+						124486	-731	24203	147958
PHENOLS								1031	1031
MEA									0
UNCONVERTED COAL	343800							-316296	27504
ASH	44556								44556
TOTAL	396282	22188	6862	225127	96165	125332	0	0	871956

PLANT OUTPUT

COMPONENTS	PURGE H2 #/hr	PURGE GASES #/hr	NAPHTHA #/hr	GAS OIL #/hr	ROSE FEED #/hr	SOUR WATER #/hr	TOTAL OUTLET #/hr
N2							0
H2	2571	1817				2	4390
H20	21	2114	22	87		358822	361066
H2S	472	1664	32			7974	10142
NH3	1	67	8			4703	4779
CO	251	168					419
CO2	25	67				596	688
C1	4004	4433	2			9	8448
C2	2039	4940	25			6	7010
C3	1247	5162	169			1	6579
C4	429	3021	361				3811
C5-350	699	10316	38553	1526			51094
350-450	7	126	456	24372			24961
450-650	2	187		116926			117115
650-850		2		47356	332		47690
850-1000				229	2485		2714
1000+					147958		147958
PHENOLS						1031	1031
MEA							0
UNCONVERTED COAL					27504		27504
ASH					44556		44556
TOTAL	11768	34084	39628	190496	222835	373144	871955

Figur 10.4

MATERIAL BALANCE PER TRAIN
IMPROVED BASELINE PLUS
HYDROGEN BY NATURAL GAS REFORMING OPTION

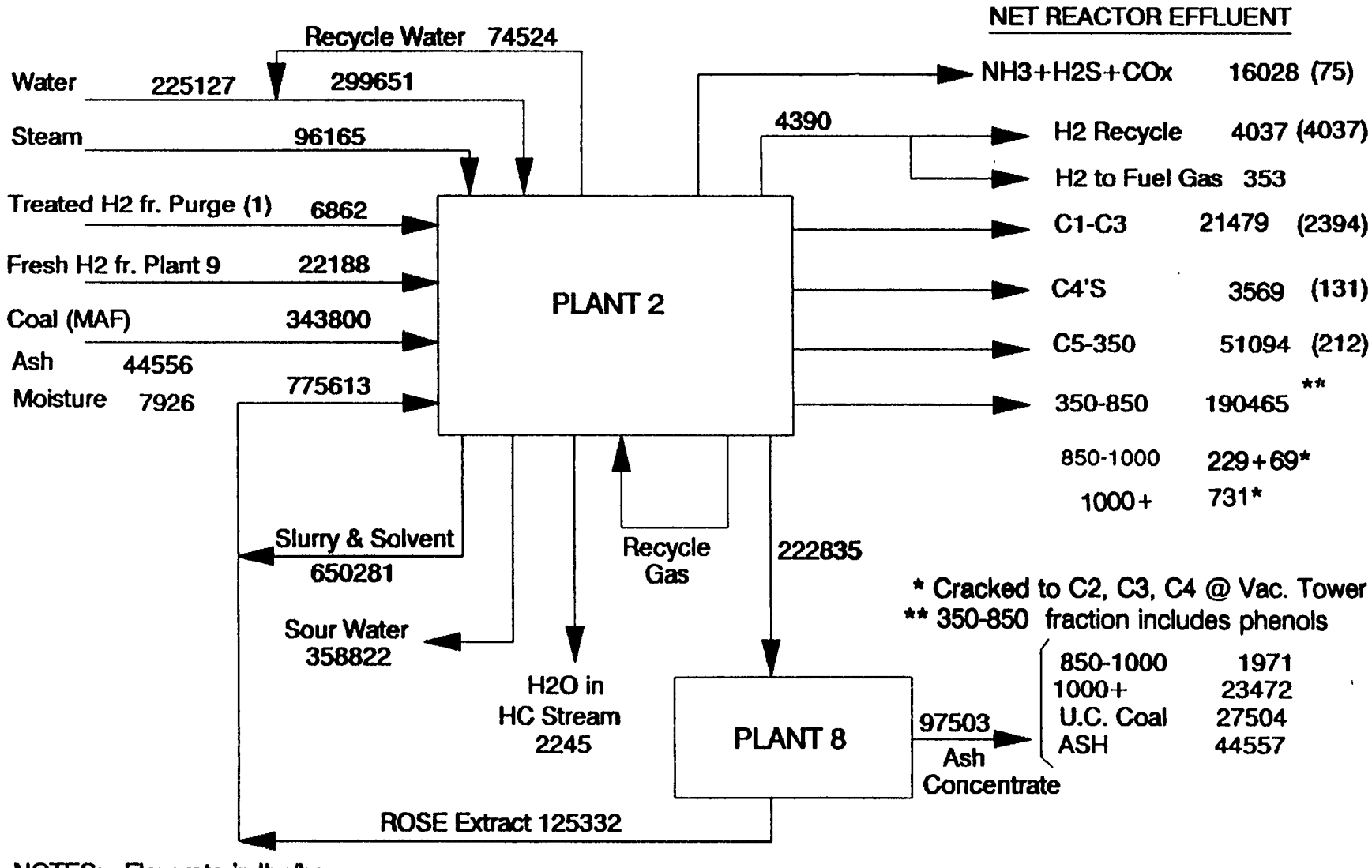

* Cracked to C2, C3, C4 @ Vac. Tower
** 350-850 fraction includes phenols

NOTES: . Flow rate in lbs/hr
. Numbers in parenthesis are due to input stream (1). Therefore, to calculate the % yield subtract out the corresponding number in parenthesis.
. The HC's in sour water are shown in net reactor effluent.

H2REFOP.DRW

Table 10.4

Improved Baseline Case Plus Option 6

Plant 3
Material Balance

	PLANT INPUT			PLANT OUTPUT						
COMPONENTS	PLT 2 NAPHTH #/hr	PSA TG FR PLT 6 #/hr	TOTAL INLET #/hr	LO OH GA TO PLT 6 #/hr	FUEL GAS #/hr	C3 PROD #/hr	C4 PROD #/hr	NAPH TO PLT 4 #/hr	SOUR WATER #/hr	TOTAL OUTLET #/hr
N2			0							0
H2		2740	2740		2740					2740
H20	88	1254	1342	48	348	4			942	1342
H2S	128	6	134	128	4					132
NH3	32		32	32						32
CO		1376	1376		1376					1376
CO2			0							0
C1	8	31082	31090	6	31084					31090
C2	100	28262	28362	98	27784	480				28362
C3	676	27866	28542	674	24	27558	286			28542
C4	1444	18732	20176	1294	134	552	17984	212		20176
C5-350	154212	44392	198604	1150	7024		364	190066		198604
350-450	1824	1	1825		2			1824		1826
450-650		1	1					2		2
650-850			0							0
850-1000			0							0
1000+			0							0
PHENOLS			0							0
MEA		6	6					6		6
UNCONVERTED COAL			0							0
ASH			0							0
TOTAL	158512	155718	314230	3430	70520	28594	18634	192110	942	314230

Table 10.5

Improved Baseline Case Plus Option 6

Plant 4
Material Balance

	PLANT INPUT								PLANT OUTPUT				
COMPONENTS	NAPH FR PLT 3 #/hr	PLT 6 KO LIQ #/hr	NAPH FR PLT 5 #/hr	MU H2 FR PLT 6 #/hr	MU H2 FR PLT 9 #/hr	WASH WATER #/hr	RXN DELTA #/hr	TOTAL INLET #/hr	H2 PURGE #/hr	GAS TO PLT 6 #/hr	NAPHTHA PROD #/hr	SOUR WATER #/hr	TOTAL OUTLET #/hr
N2								0					0
H2				236	1232		-488	980	820	160			980
H20		1	6			18800	413	19220	24	45		19151	19220
H2S							76	76	3	40		34	77
NH3			5				70	75	1	47		26	74
CO								0					0
CO2								0					0
C1		4	1	13	10		980	1008	489	518			1007
C2		16	14				687	717	128	589			717
C3		48	113				655	816	51	765			816
C4	212	84	306				2515	3117	91	2722	304		3117
C5-350	190065	3374	12910				-4546	201803	508	500	200796		201804
350-450	1824	8	250				-73	2009			2009		2009
450-650	2	426					-260	168			168		168
650-850		8					-6	2			2		2
850-1000								0					0
1000+								0					0
PHENOLS								0					0
MEA	6	18					-24	0					0
UNCONVERTED COAL								0					0
ASH								0					0
TOTAL	192109	3987	13605	249	1242	18800	-1	229991	2115	5386	203279	19211	229991

Table 10.6

Improved Baseline Case Plus Option 6

Plant 5
Material Balance (Per Train)

PLANT INPUT

COMPONENTS	PLT 2 GAS OIL #/hr	MU H2 FR PLT 6 #/hr	MU H2 FR PLT 6 #/hr	STEAM #/hr	WASH WATER #/hr	RXN DELTA #/hr		TOTAL INLET #/hr
N2								0
H2		1728	14298			-13704		2322
H20	348			5000	40600	4638		50586
H2S						200		200
NH3						3096		3096
CO								0
CO2								0
C1		95	114			1820		2029
C2						2046		2046
C3						2426		2426
C4						1744		1744
C5-350	6104					9912		16016
350-450	97488					3488		100976
450-650	467704					1754		469458
650-850	189424					-17314		172110
850-1000	916					-106		810
1000+								0
PHENOLS								0
MEA								0
UNCONVERTED COAL								0
ASH								0
TOTAL	761984	1823	14412	5000	40600	0	0	823819

PLANT OUTPUT

COMPONENTS	PURGE H2 #/hr	GAS TO PLT 6 #/hr	NAPH TO PLT 4 #/hr	LT DIST #/hr	HY DIST #/hr	GAS OIL #/hr	SOUR WATER #/hr	TOTAL OUTLET #/hr
N2								0
H2	350	1972						2322
H20	4	836	6		252		49488	50586
H2S		12					188	200
NH3	6	289	5				2797	3097
CO								0
CO2								0
C1	216	1812	1					2029
C2	94	1938	14					2046
C3	70	2243	113					2426
C4	30	1408	306					1744
C5-350	34	2398	12910	256	418			16016
350-450	2	100	250	79466	21154	4		100976
450-650		7		11788	329535	128128		469458
650-850					8900	163210		172110
850-1000						810		810
1000+								0
PHENOLS								0
MEA								0
UNCONVERTED COAL								0
ASH								0
TOTAL	806	13015	13605	91510	360259	292152	52473	823820

10.4 Utility Summary for the Directly Affected Plant

The utility requirement for the directly affected plant (plant 9-01) is shown in Table 10.7.

TABLE 10.7

Utility Requirement for Plant 9-01
Improved Baseline Plus Option 6

Steam, 600 psig saturated, lbs/hr	-1,285,006
Cooling water, gpm	10,709
Electricity, KW	6,961
Fuel Gas, MMBtu/hr	1,750

10.5 Capital Costs (Nth Plants)

The total installed cost for the option was re-estimated from the baseline estimates by replacing the cost of the directly affected baseline plant with the cost of the optional plant. All other cost modifications impacting the indirectly affected plants were done using the cost vs. capacity correlations.

Thus the installed costs reported in the last column of Table 10.8 for the Nth plant scenario are those for the entire complex with hydrogen production by steam reforming of natural gas (Option 6).

For this option the directly affected plants are hydrogen production by coal gasification (plant 9), air separation plant (plant 10), and the additional fluid bed combustion (FBC) unit in plant 31.4-01 for processing ROSE-SR bottoms. For this option, as discussed earlier, the air separation plant (plant 10) is not a part of this complex.

Table 10.8
Nth Plant Capital Costs for the Complex
Improved Baseline with H2 Produced by Natural Gas Reforming

Plant #	No. of Oper. Trains	Total No. of Trains	ISBL Plant Field Costs 1000$	ISBL Plant Cost Adj. with OSBL Costs 1000$	Installed Plant Costs 1000$
1	6	6	86000	115800	142100
1.4	12	12	96800	130400	160000
2	4	4	854800	1151300	1412600
3	1	1	23600	31700	38900
4	1	1	13600	18300	22500
5	1	1	82900	111700	137000
6	1	1	129900	174900	214700
8	1	1	41700	56200	68900
9-01	3	3	224700	302600	371300
11	5	5	33700	45400	55700
38	1	1	42500	57300	70300
39	1	1	18500	24900	30500
Total			1648700	2220500	2724500

10.6 Ov rall Impact

The overall impact on the entire complex due to the change in hydrogen production method from coal gasification, plant 9 (in the base case design) to steam methane reforming (plant 9-01) has been quantified based on the throughput adjustments to all the indirectly affected plants. Such effects are included in this report as: overall plant configuration and overall material balance (subsection 10.6.1), overall utility summary (subsection 10.6.2), overall water flow distribution (subsection 10.6.3) and overall hydrogen flow distribution (subsection 10.6.4).

10.6.1 Overall Plant Configuration and Material Balance

The overall plant configuration and overall material balance for this option are shown in the same figure, Figure 10.5.

10.6.2 Overall Utility Summary

The overall utility summary for this option in shown in Table 10.9.

10.6.3 Overall Water Flow Distribution

The overall water flow distribution for the entire complex is shown in Figure 10.6.

10.6.4 Overall Hydrogen Flow Distribution

The overall hydrogen flow distribution for the entire complex is shown in Figure 10.7.

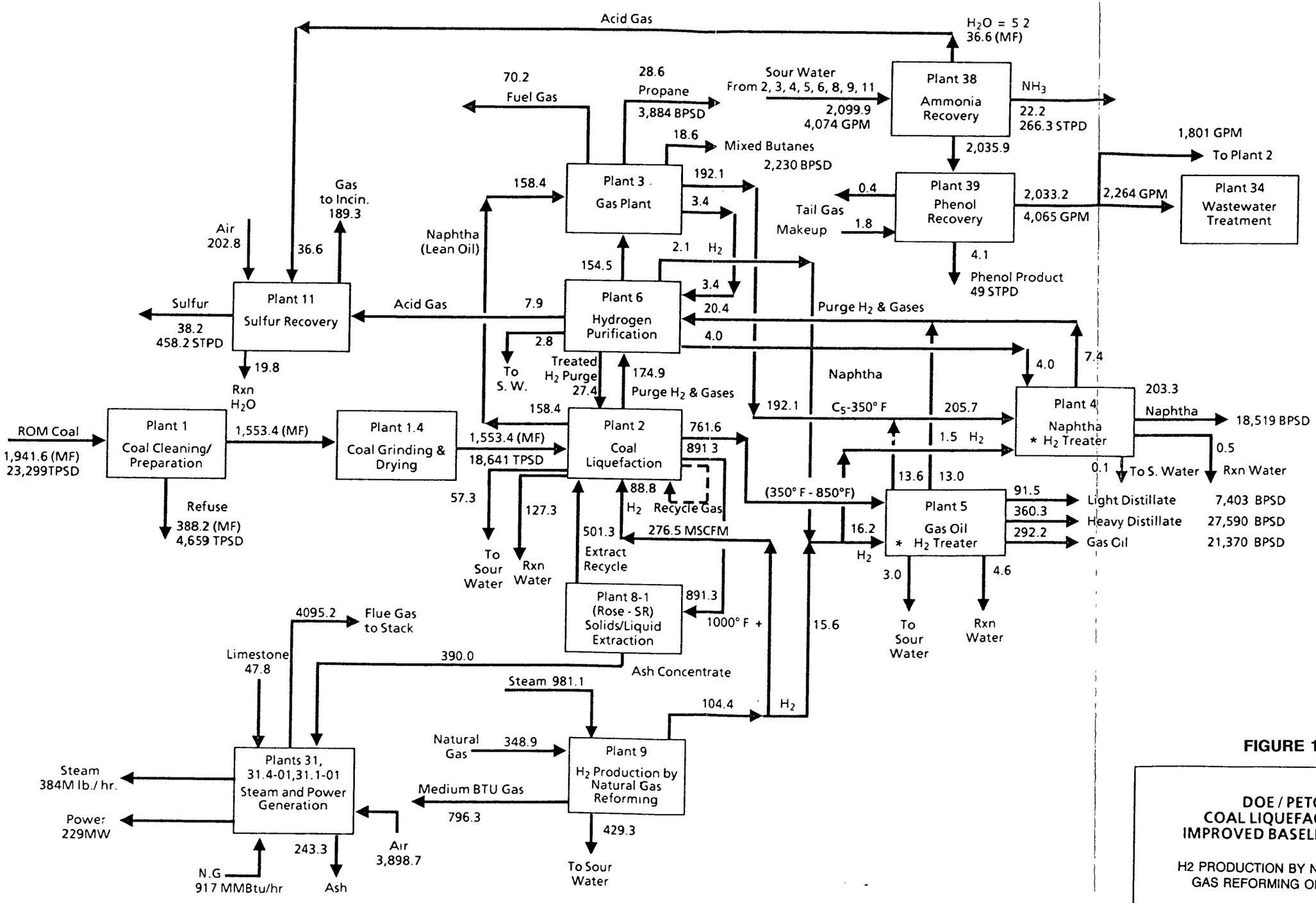

Notes:

1. Flow rates are in MLB/HR unless noted and on dry basis
2. Minor streams including steam, water, sour water, and make-up amine are not shown on this diagram
3. Flow rates around plants #38, 39, 34 are shown on wet basis

* H2 Treater = Hydrotreater

1092048-2

FIGURE 10.5

DOE / PETC
COAL LIQUEFACTION
IMPROVED BASELINE CASE

H2 PRODUCTION BY NATURAL GAS REFORMING OPTION

OVERALL PLANT CONFIGURATION AND OVERALL MATERIAL BALANCE

TABLE 10.9

OVERALL UTILITY BALANCE FOR IMPROVED BASELINE WITH H2 PRODUCTION BY NATURAL GAS REFORMING OPTION

12-Feb-93

Plant No.	PLANT NAME	Fuel Gas MMbtu/hr	Electric Power KW	Steam Psig, Lb/hr 600 & 2620 Sup	600 @489 F	150 @366 F	50 @298 F	Cond/BFW Net Cons lb/hr	Cooling Water gpm	Sour Water gpm	Waste Water gpm	Makeup Water gpm	Air scfm	Nitrogen scfm
	PROCESSING UNITS													
1	Coal Cleaning and Handling		6,651								629			
1.4	Coal Grinding and Drying	530	13,204						262				6,492	81,819
2	Coal Liquefaction	1,129	59,162	6,068	(162,508)	(98,203)	176,362	462,939	8,824	(2,871)				779
3	Gas Plant	(1,522)	502		279,468		15,096	(294,564)	9,784	(2)				
4	Naphtha Hydrotreater	71	1,198		90,386			(90,386)	7,080	(38)		(37)		
5	Gas Oil Hydrotreater	335	2,147		62,030	(104,578)		47,548	330	(99)		(81)		
6	Hydrogen Purification		28,859			71,944	2,483	(74,427)	6,438	(101)		(84)		
8	Critical Solvent Deashing	208	4,286			24,969				(50)				
9-01	H2 Prod by Nat'l Gas Reforming	1,750	6,961		(1,285,006)			2,266,155	10,709	(859)				
11	By-product Sulfur Recovery	43	1,897		37,145	(115,570)	33,745	44,680	5,034	(54)				
ALL	Common Users			73000		40000	90000	(193,000)				(532)	8,508	
	Sub Total (Process)	2,544	124,867	79,068	(978,485)	(181,438)	317,686	2,168,945	48,461	(4,074)	629	(734)	15,000	82,598
	OFFSITES													
19	Relief and Blowdown		19											
20	Tankage		6,758			22,000	3,300	(25,300)	100					
30	Electrical Distribution													
31	Steam and Power Generation	917		(79,068)			(305,169)	(851,199)	0		(338)	(3,149)		
31.1	Steam Turbine Generation		(229,183)	2,434,297				(2,604,636)	177,565			(341)		
31.4	Fluid Bed Combustion		18,852	(2,434,297)				2,434,297			(97)	(97)		
32	Raw, Cooling and Potable Water Systems		16,927						(316,833)		(235)	13,745		
33	Fire Protection		44											
34	Sewage & Effluent Treatment		7,313				3,000	(3,000)				(235)		
35	Instrument & Plant Air Systems		2,894										(15,000)	
36	Purge and Flush Oil System		258											
37	Solid Waste Disposal		48								90			
38	Ammonia Recovery		1,673		356,183	634,985		(991,169)	83,920	4,074				
39	Phenol Recovery		1,236			34,482	93,456	(127,938)	6,787		(2,264)			
Other	Bldg 41,42, Light, Etc.		4835											
	Natural Gas Imported	(3,461)												
	Off Site BL and Evaporation										2,215	(9,189)		
	Sub Total (Offsite)	(2,544)	(168,326)	(79,068)	356,183	691,467	(205,413)	(2,168,945)	(48,461)	4,074	(629)	734	(15,000)	0
	GRAND TOTAL	0	(43,459)	0	(622,302)	510,029	112,273	0	0	0	0	0	0	82,598

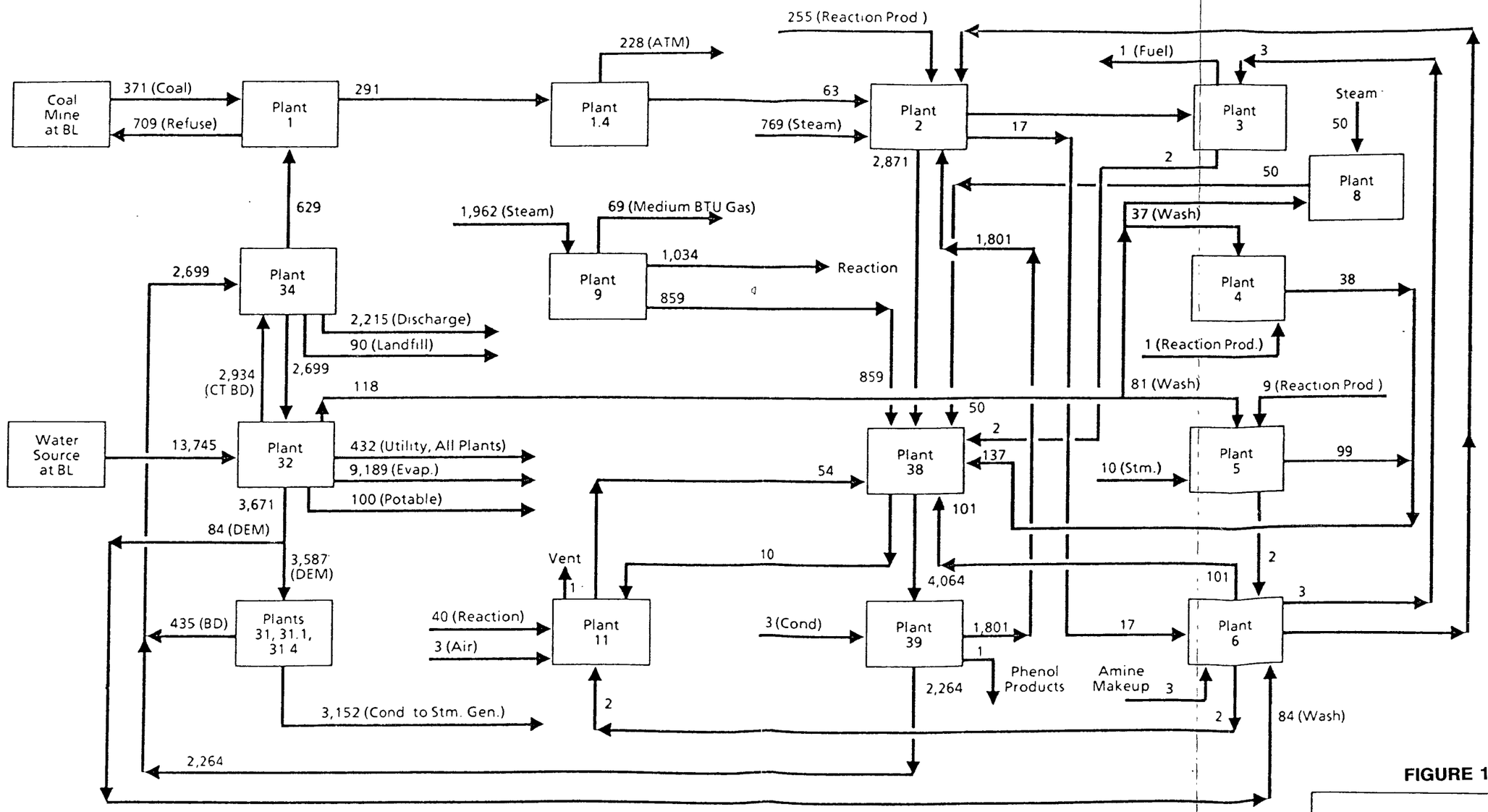

Notes.

1 Flows are for normal operation and in GPM

FIGURE 10.6

DOE / PETC
COAL LIQUEFACTION
IMPROVED BASELINE CASE

H2 PRODUCTION BY NATURAL GAS REFORMING OPTION

OVERALL WATER FLOW DISTRIBUTION

1092048-2

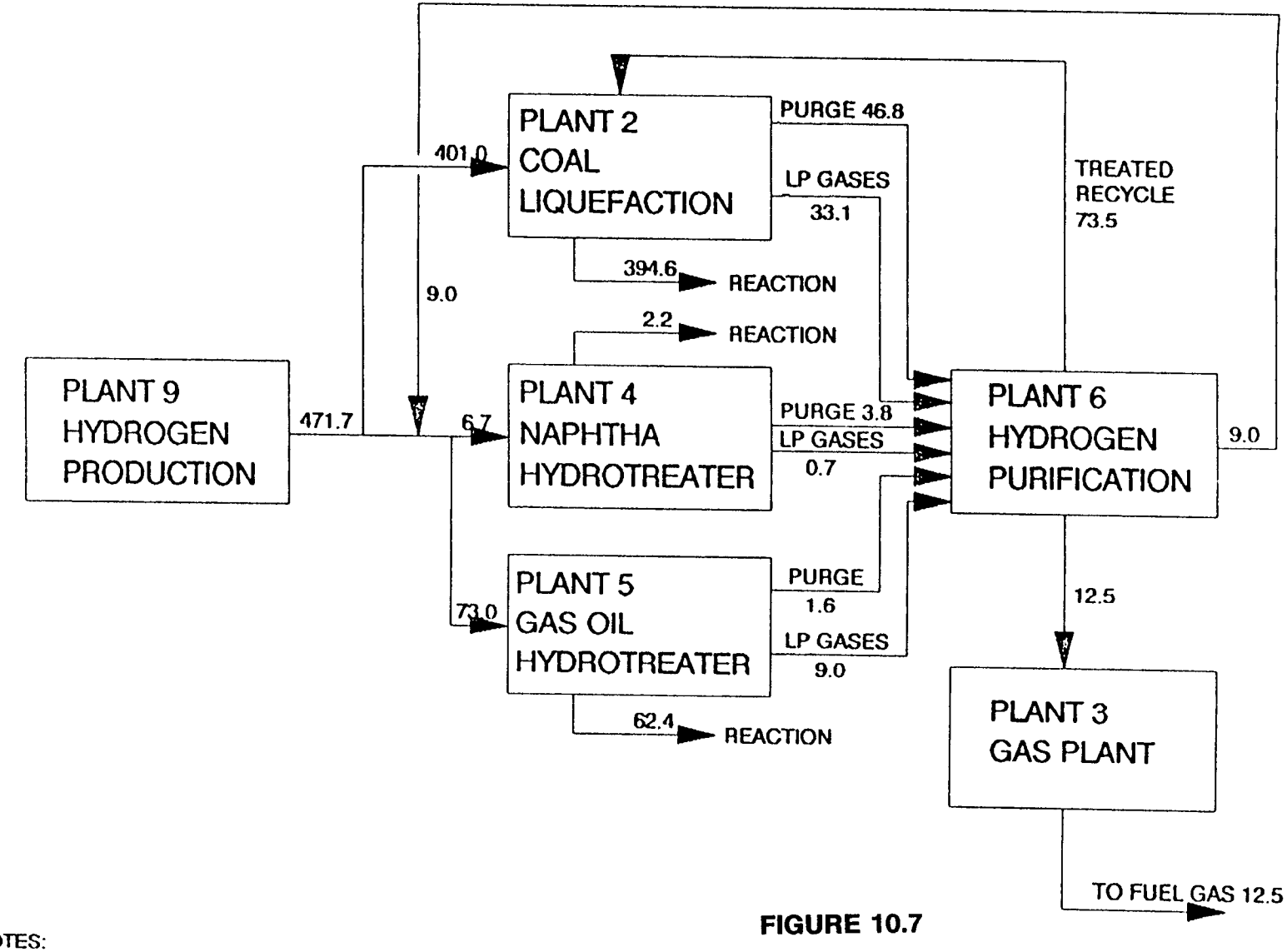

NOTES:
Hydrogen flow rates are in MMSCFD (Pure H2)

FIGURE 10.7

OVERALL HYDROGEN FLOW DISTRIBUTION
H2 PRODUCTION BY NATURAL GAS REFORMING OPTION

NATGASFL.DRW

11. ASPEN/SP PROCESS SIMULATION MODEL OF THE IMPROVED BASELINE AND OPTION 6

11. ASPEN/SP Process Simulation Model of the Improved Bas lin and Option 6 (Steam Reforming of Natural Gas plus FBC Unit for Hydrogen Production)

11.1 General Description

An ASPEN/SP process simulation model of the improved baseline (high space velocity case) was developed starting from the original baseline design case model. The overall process flow diagram for the improved baseline case is shown in Section 2 of this report as overall plant configuration and depicted in Figure 2.1. The block flow diagram for the ASPEN/SP process simulation model is the same as that of the original baseline design and is shown in Figure 11.1.

The model for the improved baseline was developed by changing the original baseline model only where appropriate. Significant modifications were required in the Fortran source code of the user Fortran block models for:

- Plant 2 (coal liquefaction plant) to account for the different coal liquefaction yields and composition of the syncrude product.
- Plant 3 (gas plant) to account for the different flow rates and compositions of the entering gas streams.
- Plant 4 (naphtha hydrotreater) to account for the different feed composition and hydrotreating yields.
- Plant 5 (gas oil hydrotreater) to account for the different feed composition and hydrotreating yields.

The above Fortran source code changes were required because significant changes were made in the basic yields and/or composition of the streams leaving these plants. The previously published Fortran user block models listing of the ASPEN/SP direct coal liquefaction process simulation model in Appendix B of the Task V Topical Report contains these changes. In addition to the changes to the Fortran source code for the above plants, many parameters in the ASPEN/SP input file for these plants were changed.

Modifications also were made to several supplemental Fortran subroutines in order to account for the different densities of the product streams, raw water make-up rate, and OSBL plant costs. The previously published supplemental Fortran subroutine listing of the ASPEN/SP direct coal liquefaction process simulation model in Appendix C of the Task V Topical Report contains these modifications.

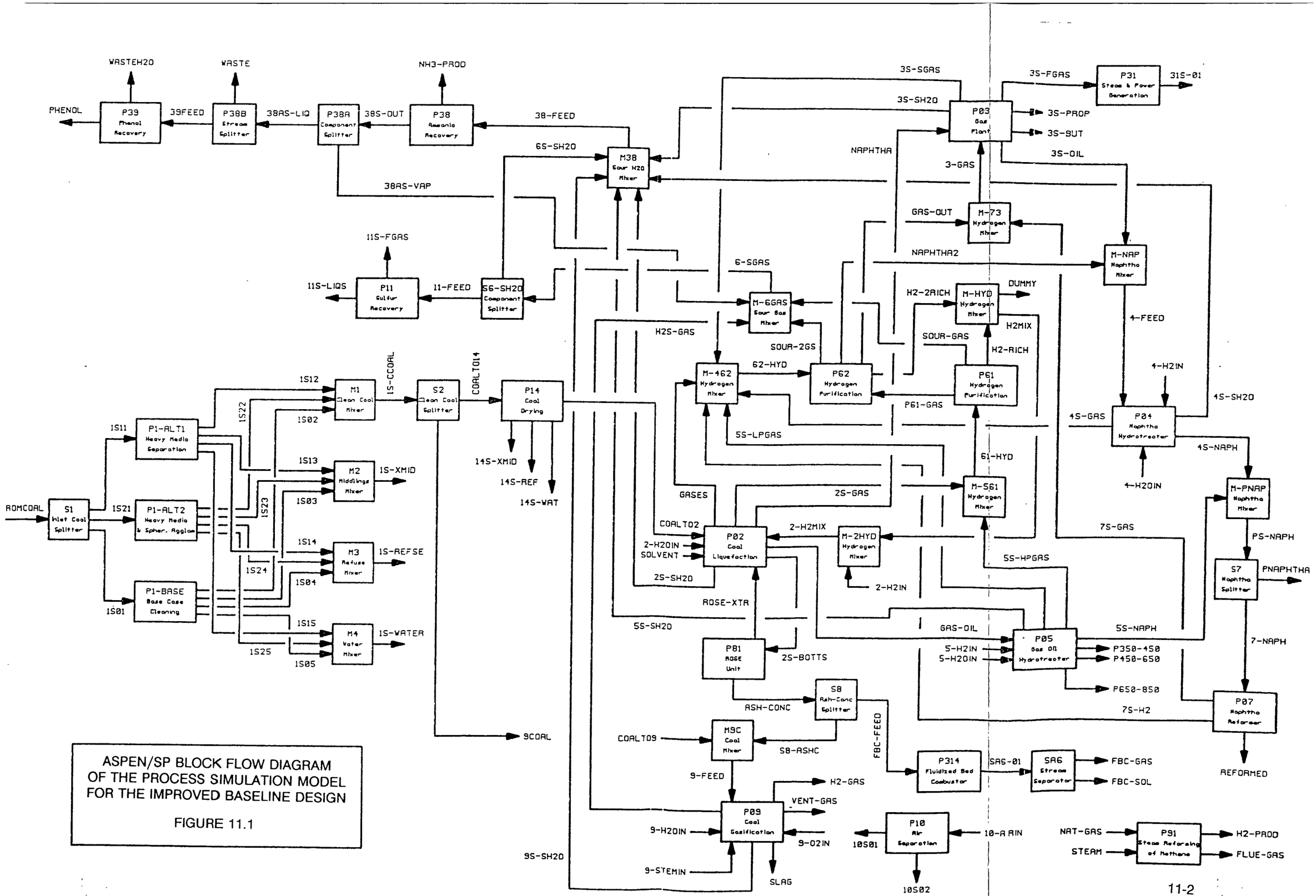

ASPEN/SP BLOCK FLOW DIAGRAM OF THE PROCESS SIMULATION MODEL FOR THE IMPROVED BASELINE DESIGN

FIGURE 11.1

Additional changes to the ASPEN/SP input file also were required for:

- Plant 1.4 (coal grinding and drying plant) to reflect the use of three coal drying trains per single coal liquefaction reactor train.
- Plants 6.1 and 6.2 (hydrogen purification plants) to reflect the changes in the entering flow rates and compositions of the hydrogen rich-gas streams.
- Plant 8.1 (ROSE-SR solids/liquid extraction plant) to reflect the different amount of organic material contained in the ash concentrate stream.
- Plant 9.0 (hydrogen production by coal gasification plant) to reflect differences in gasifier performance with the different ash concentrate stream composition.
- DES-SPEC COALFLO to set the correct dry coal feed rate to the coal liquefaction reactors in Plant 2.
- In-line Fortran block SETUP31 to reflect the OSBL utilities consumptions.
- In-line Fortran Block SUMMARY to reflect the revised extra board and OSBL operator requirements.
- Several in-line Fortran SETUP blocks which calculate and set the correct flow rates of hydrogen, steam and water streams to the various process plants.

Appendix A contains a listing of the OPT8.INP ASPEN/SP input file for simulating the improved baseline (high space velocity) case. With only one minor change, this input file also was used to simulate the high space velocity case combined with the option of producing hydrogen by steam reforming of natural gas.

11.2 Comparison of Model Predictions with Improved Baseline Design

The improved baseline design is simulated by running the OPT8.INP file shown in Appendix A. Table 11.1 compares the ASPEN/SP process simulation model results with those of the engineering design. The major yields are predicted well with the largest difference being 66 bbl/day of naphtha or 0.34%. The ammonia yield is underpredicted by 5 tons/day or 1.7%, and the sulfur yield is underpredicted by 40 tons/day or 4.6%. The natural gas purchase rate is overpredicted by 3.9 MMMBTUs/day or 4.7%.

The total installed capital is underpredicted by 11.9 MM$ or 0.34%. The majority of this difference is caused by the underprediction in the costs of the sulfur, ammonia and phenol recovery plants. Part of this difference is attributable to the underprediction of the ammonia and sulfur yields, and part is attributable to the fact that the model cost predictions are based on only the sulfur, ammonia and phenol product rates and are not based on the plant feed rates.

Table 11.1
Comparison of the ASPEN/SP Process Simulation Model with the Process Design for the Improved Baseline Case

Description	Model	Design	Delta (M-D)	Percent Delta
ROM Coal Feed Rate, MTSD (dry)	32.552	32.552	0.000	0.00
Coal cleaning Refuse Rate, MTSD	6.510	6.509	0.001	0.02
Ash Production Rate, MTSD	3.161	3.161	0.000	0.01
Natural Gas Rate, MMMBTU/SD	87.870	83.928	3.942	4.70
Electricity Purchase, MEGA-WH/SD	0	0	0.000	0.00
Raw Water Make-up, MMGSD	16.862	16.862	0.000	0.00
Naphtha Production, MBSD	18.582	18.519	0.063	0.34
Lt. Dist. Production, MBSD	7.416	7.403	0.013	0.18
Hvy. Dist. Production, MBSD	27.628	27.590	0.038	0.14
Gas Oil Production, MBSD	21.395	21.370	0.025	0.12
Liquid Propane Production, MBSD	3.890	3.884	0.006	0.15
Mixed Butanes Production, MBSD	2.244	2.230	0.014	0.63
Ammonia Production, Mtsd	0.272	0.277	-0.005	-1.66
Phenol Production, MTSD	0.035	0.035	0.000	0.00
Sulfur Production, MTSD	0.819	0.859	-0.040	-4.63
Number of Operators/Boardmen	420	420	0.000	0.00
Tot. Installed Capital, $MM (E-yr)	3520.0	3531.9	-11.938	-0.34
Plant Costs, MM$				
1. Coal Cleaning	186.107	186.2	-0.1	-0.05
1.4 Crushing and Drying	171.703	171.8	-0.1	-0.06
2 Liquefaction	1516.934	1517.0	-0.1	-0.00
3 Gas Plant	41.877	41.9	0.0	-0.05
4 Naphtha Hydrotreater	24.135	24.1	0.0	0.15
5 Gas Oil Hydrotreater	147.115	147.1	0.0	0.01
6 H2 Recovery	230.689	230.7	0.0	0.00
8 ROSE-SR	73.933	74.0	-0.1	-0.09
9 H2 from Coal	535.102	538.2	-3.1	-0.58
10 Air Separation	395.527	394.8	0.7	0.18
11 Sulfur	94.117	97.8	-3.7	-3.77
38 Ammonia Recovery	77.422	79.9	-2.5	-3.10
39 Phenol Recovery	25.301	28.4	-3.1	-10.91
TOTAL	3519.962	3531.900	-11.9	-0.34

11.3 Comparison of Model Predictions with Improv d Bas lin Design with Hydrogen Production by Steam Ref rming of Natural Gas

With only one minor change, the OPT8.INP ASPEN/SP input file shown in Appendix A can be modified to simulate the improved baseline design combined with the hydrogen production by steam reforming of natural gas option. This case also has a fluidized bed combustor coupled with a steam turbine generator to consume the ash concentrate stream and produce electric power. The overall process flowsheet for this situation is identical to the overall plant configuration shown in Section 10 of this report (Figure 10.2). The block flow diagram for the ASPEN/SP process simulation model is the same as that of the original baseline design as shown in Figure 11.1.

The hydrogen production by steam reforming of natural gas option is activated from within the input file via Fortran block SETEM and splitter block S9. The baseline design case hydrogen production by coal gasification method, Plants 9 and 10, is automatically deactivated when the Plant 9.1 (hydrogen production by steam reforming of natural gas plant) option is chosen. This two-block approach for switching between the different hydrogen production methods uses efficient, feed-forward control and maintains the overall mass balance in the model.

To activate the hydrogen production by steam reforming of natural gas (Plant 9.1) option, the variable N9 in Fortran block SETEM is set to a value of 1. This automatically resets the inlet stream flow rates to Plants 9 and 10 to very small values, effectively shutting off the feed to these plants and the coal gasification option. The splitter block is then used to reset the required hydrogen rate for Plant 9, H9NEED, to a very small value to ensure that hydrogen only will be produced by the desired method (steam reforming of natural gas), and that the model will be in mass balance.

In order to have the model match the engineering design, it had to be forced to use six coal cleaning trains in Plant 1 by setting the third integer input in the P1-BASE block to 6. Table 11.2 compares these ASPEN/SP process simulation model results with those of the engineering design. The major yields are predicted well, with the largest difference being 63 bbl/day of naphtha or 0.34%. The ammonia yield is underpredicted by 5 tons/day or 2.0%. The natural gas purchase rate is underpredicted by 6.6 MMMBTUs/day or 2.4%, and the electric power production is overpredicted by 9.5 mega-watt-hours per day or 0.91%.

The total installed capital is underpredicted by 9.9 MM$ or 0.36% when the model is forced to use six coal cleaning trains in Plant 1 to agree with the engineering design. The majority of this difference is caused by the underprediction of the costs of the hydrogen production from natural gas plant (Plant 9.1) and the sulfur plant (Plant 11). The difference in the sulfur plant is attributable to the fact that the model only requires three trains whereas the engineering design cost is based on five trains sulfur recovery plant with proper adjustment of throughput rates.

When the model is allowed to select only four coal cleaning trains in Plant 1, the total installed capital is reduced to 2693.0 MM$ and only 251 plant operators are required.

Table 11.2
Comparison of the ASPEN/SP Process Simulation Model with the Process Design for the Improved Baseline Case with Hydrogen Production by Steam Reforming of Natural Gas Option

Description		Model	Design	Delta (M-D)	Percent Delta
ROM Coal Feed Rate, MTSD (dry)		23.301	23.299	0.002	0.01
Coal cleaning Refuse Rate, MTSD		4.660	4.659	0.001	0.02
Ash Production Rate, MTSD		2.940	2.920	0.020	0.70
Natural Gas Rate, MMMBTU/SD		274.534	281.145	-6.611	-2.35
Electricity Purchase, MEGA-WH/SD		-1052.52	-1043.01	-9.504	0.91
Raw Water Make-up, MMGSD		19.795	19.793	0.002	0.01
Naphtha Production, MBSD		18.582	18.519	0.063	0.34
Lt. Dist. Production, MBSD		7.416	7.403	0.013	0.18
Hvy. Dist. Production, MBSD		27.628	27.590	0.038	0.14
Gas Oil Production, MBSD		21.395	21.370	0.025	0.12
Liquid Propane Production, MBSD		3.890	3.884	0.006	0.15
Mixed Butanes Production, MBSD		2.244	2.230	0.014	0.63
Ammonia Production, Mtsd		0.261	0.266	-0.005	-1.99
Phenol Production, MTSD		0.049	0.049	0.000	0.00
Sulfur Production, MTSD		0.459	0.458	0.001	0.13
Number of Operators/Boardmen		272	272	0.000	0.00
Tot. Installed Capital, $MM (E-yr)		2714.6	2724.5	-9.898	-0.36
Plant Costs, MM$					
1.	Coal Cleaning	142.080	142.1	0.0	-0.01
1.4	Crushing and Drying	159.890	160.0	-0.1	-0.07
2	Liquefaction	1412.569	1412.6	0.0	-0.00
3	Gas Plant	38.996	38.9	0.1	0.25
4	Naphtha Hydrotreater	22.474	22.5	0.0	-0.12
5	Gas Oil Hydrotreater	136.994	137.0	0.0	-0.00
6	H2 Recovery	214.817	214.7	0.1	0.05
8	ROSE-SR	68.847	68.9	-0.1	-0.08
9	H2 from Coal	---	0.0		
9.1	H2 from Natural Gas	367.289	371.3	-4.0	-1.08
10	Air Separation	---	0.0		
11	Sulfur	49.813	55.7	-5.9	-10.57
38	Ammonia Recovery	69.929	70.3	-0.4	-0.53
39	Phenol Recovery	30.904	30.5	0.4	1.32
	TOTAL	2714.602	2724.5	-9.9	-0.36

11.4 ASPEN/SP Kinetic Reactor Modeling of the Improved Baseline Design

The ASPEN/SP coal liquefaction reactor kinetic model that has been described in Section 12 of the "Task V Topical Report: Process Simulation Model for Baseline and Options," December, 1992 was modified so that it also would simulate the improved baseline design case.

Because of the space velocity and yield differences between the original and improved designs, some changes were made to the original Fortran source code. The Fortran source code listing given in Appendix N, "ASPEN/SP Fortran User Block Models for the Kinetic Reactor Model" in the appendices to the Task V Topical Report contains these revisions. Some of these changes are incompatible with what is required to simulate the original baseline design. In this situation, the code required for simulating the improved baseline design has been converted to comments by placing the "C%" characters in columns 1 and 2. When it is desired to simulate the improved baseline design, the "C%" characters should be replaced by spaces and the lines containing the material specifically for the original baseline design should be converted to comments. These changes only have to be made in two subroutines, USR2S2 and USR2YF. In subroutine USR2S2, only two lines need to be changed, and they deal with the catalyst replacement rate calculations for the second reactor. DATA statements in subroutine USR2YF contain the first and second reactor yields, and since only one DATA statement can be used to initialize a variable, the other one must be converted to comments. Thus, the appropriate DATA statements for variables A and B must be activated when simulating the improved baseline design.

Naturally, when simulating the original baseline design, the above Fortran source code modifications should be undone.

After the above Fortran source code changes have been made, the USR2G.FOR file should be recompiled with the "F77 USR2G" command as described in Section 12.12 of the Task V Topical Report.

Since the flow rates and compositions of the streams entering and leaving the coal liquefaction reactors are different for the improved baseline design case, a different input file is required to simulate this case. This input file is shown in Appendix B. The improved baseline design is simulated as described in Section 12.12 of the Task V Topical Report except the T2V2HSV.INP file is selected instead of the T2V2S.INP file.

Table 11.3 shows the key results of the simulation of the improved baseline design. The coal feed rate is 4125.6 short tons/day per train or 16502 short tons/day. The results shown in Table 11.3 are similar to those of the original baseline design except that the bed exotherms and the gas and liquid velocities are slightly higher, and there is less catalyst in each reactor.

Table 11.3

Kinetic Model: Key Results for the Improved Baseline Design

Reactor	I	II
ID (excluding refractory), ft.	15	15
Refractory Thickness, in.	6	6
Weight, short tons	1295	1295
Gas Velocity, fps	0.139	0.185
Total Liquid Velocity, fps	0.119	0.109
Bed Height, ft.:		
Settled	34.1	34.1
Expanded	77.0	77.0
Reactor Average Temp., °F	810	760
Bed Exotherm, °F	34	30

Note

Total Coal Rate: 16,503 tons/day MAF
Number of Reactor Trains = 4

Catalyst:
Average diameter = 0.083 in.
Length = 0.240 in.
Equivalent spherical diameter = 0.135 in.

12. OVERALL RAW MATERIAL CATALYST AND CHEMICAL COSTS

12. Overall Raw Material, Catalyst and Chemical Costs (Improv d Bas line)

Raw Material

The raw material for this plant is ROM coal. The amount of coal required for the entire complex is 32,552 TPSD (MF basis), and the unit cost for ROM coal on MF basis is $20.50 (reference Coal Week, March 9, 1992).

Catalyst and Chemicals Costs

The catalyst and chemicals costs for the entire complex are presented in Table 12.1 below. This table presents the costs are presented in two ways; 1) as a part of the variable operating costs, and 2) as a part of the fixed capital costs (initial catalysts and chemicals).

Table 12.1
CATALYSTS AND CHEMICALS COST

Plant Number	Description of Plant	Cost Per Year Thousand Dollars	
		(1)	(2)
1	Coal Cleaning and Handling	455	338
2	Coal Liquefaction Plant	77,971	24,900
3	Gas Plant	24	20
4	Naphtha Hydrotreater	72	234
5	Gas Oil Hydrotreater	611	1,988
6	Hydrogen Purification	33	165
8	Critical Solvent Deashing Unit	88	373
9	Hydrogen Production by Coal	0	0
	Gasification	2,395	7,730
10	Air Separation	0	0
11	By-Product Recovery	868	1,800
31	Steam and Power Generation	112	30
32	Raw Cooling and Potable	0	0
	Water Systems	3,662	981
34	Sewage and Effluent Water	358	94
	Treatment	0	
38	Ammonia Recovery	435	148
39	Phenol Recovery	38	14
	Total	87,120	38,816

Note:
(1) Catalysts and chemicals cost per year as a part of variable operating costs
(2) Initial catalyst and chemicals cost as a part of capital costs

13. PRODUCT VALUATION

13. Product Valuation

The coal liquid products were valued by utilizing Bechtel's linear programming modeling tool, PIMS (Process Industry Modeling Systems). A typical PAD II refinery configuration and crude mix with a fixed price were assumed. Also, it was assumed that the coal liquid naphtha (C5-350°F) was sent to a reforming unit, the light distillate (350-450°F) was used for blending (diesel and fuel oil), the heavy distillate (450-650°F) was used for diesel and fuel oil blending and was also used as FCCU feed, and the vacuum gas oil (650-850°F) was used as fuel oil blending stock and FCCU feed. The product valuation was then determined for various scenarios and expressed as "Syn-Crude Premium" (SCP). The SCPs varied between 1.07 and 1.27.

14. OVERALL UTILITY UNIT PRICES AND CONSUMPTIONS

14. Overall Utility Unit Prices and Consumptions (Improved Baselin)

The overall utility unit prices are the same as they are for the baseline design study and are shown below in Table 14.1

Table 14.1

Raw Material and Utility Pricing

Item	Cost
Feed Coal	20.50 (1) $/s. ton
Raw Water	0.10 (2) $/Mgal
Natural Gas	2.00 (3) $/MMBTU

(1) Coal Week, March 9, 1992
(2) Typical price for raw water in Southern Illinois
(3) General consensus between Amoco, Bechtel and DOE/PETC

The overall utility balance for the improved baseline and improved baseline with natural gas reforming option for hydrogen production are shown in Table 14.2 below.

Table 14.2

Overall Utility Consumptions

	Improved Baseline	Improved Baseline with Natural Gas Reforming
Water, gpm	11,710	13,375
Natural gas, MMBTU/hr	3,497	3,461*

* This does not include the natural gas requirement for the reformer plant to product hydrogen.

15. OVERALL LABOR REQUIREMENTS AND RATES

15. Overall Labor R quir ments and Rates (Improved Baseline)

15.1 Staffing Plan

The overall staffing plan for the liquefaction complex is based on the following assumptions:

- The complex is operated by a major oil company with support from corporate engineering

  Process plants are divided into 5 areas with dedicated maintenance for each area

- Contract maintenance will be utilized during any plant turn-around and other non-routine maintenance

  The complex is operated from one central control house, except for shipping and loading

15.1.1 Improved Baseline

The staffing plan for the entire complex is shown in various figures. Figure 15.1 is the overall plant management chart. Figures 15.2 through 15.7 respectively present the organization chart and personnel for the 1) laboratory, 2) operations, 3) engineering, 4) environmental health, safety and security, 5) administration and 6) maintenance.

15.1.2 Improved Baseline Plus Option 6

For this case the manpower requirement changes only for the operating organization. Therefore the numbers in Figure 15.3 is the only one which undergo change. Figure 15.8 shows the results of such changes. These changes in operators requirement are due to the difference in number of trains of various plants.

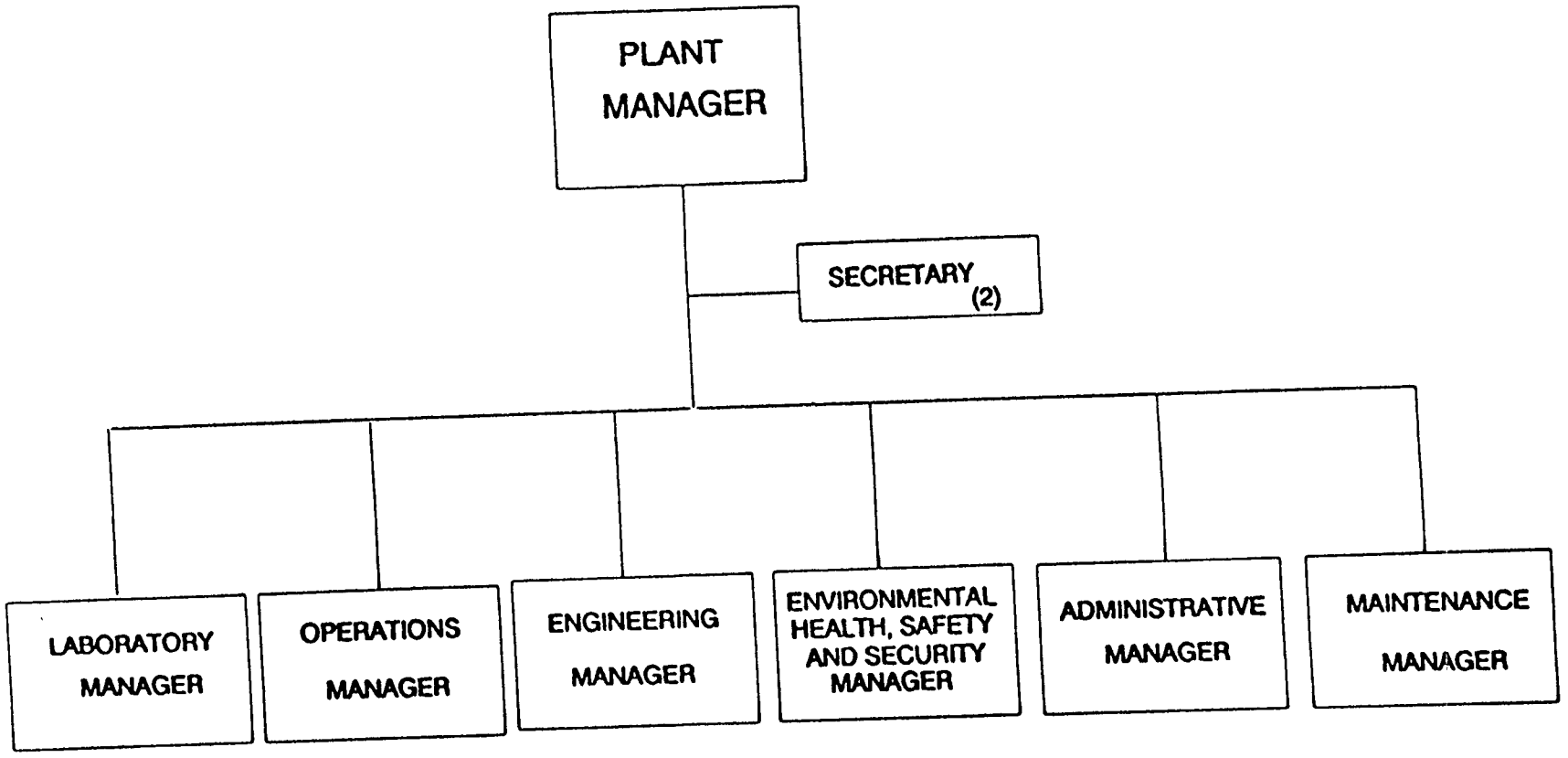

Figure 15.1

OVERALL PLANT ORGANIZATION

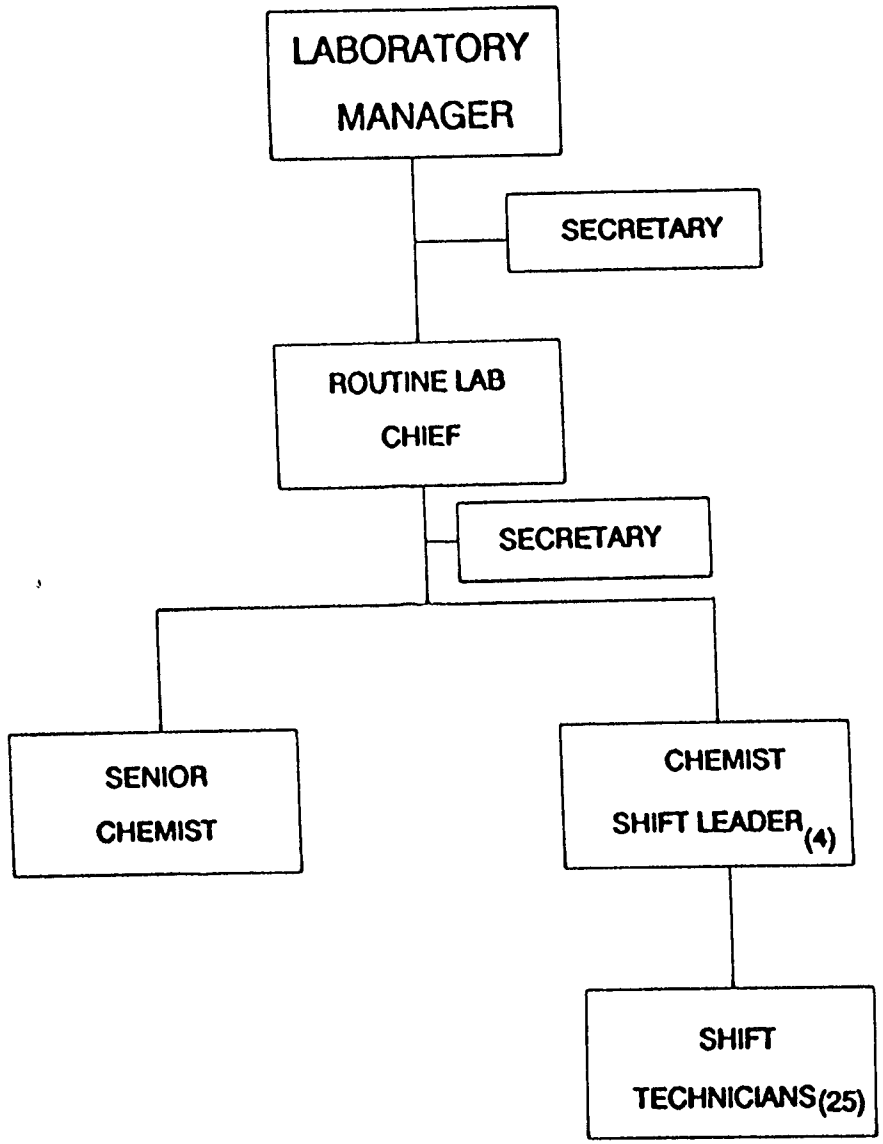

Figur 15.2
LABORATORY ORGANIZATION AND PERSONNEL

Figur 15.3
OPERATIONS ORGANIZATION AND PERSONNEL

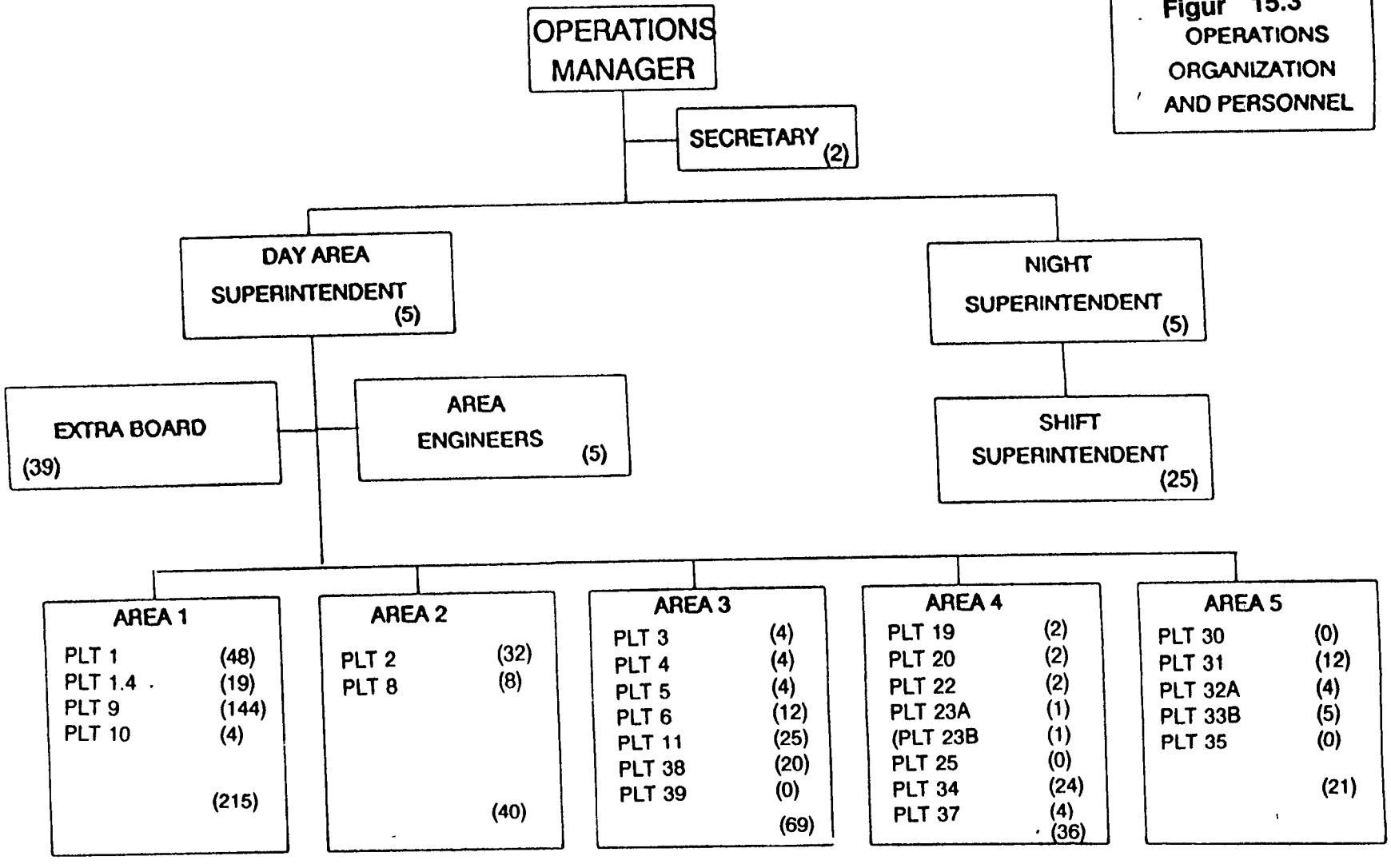

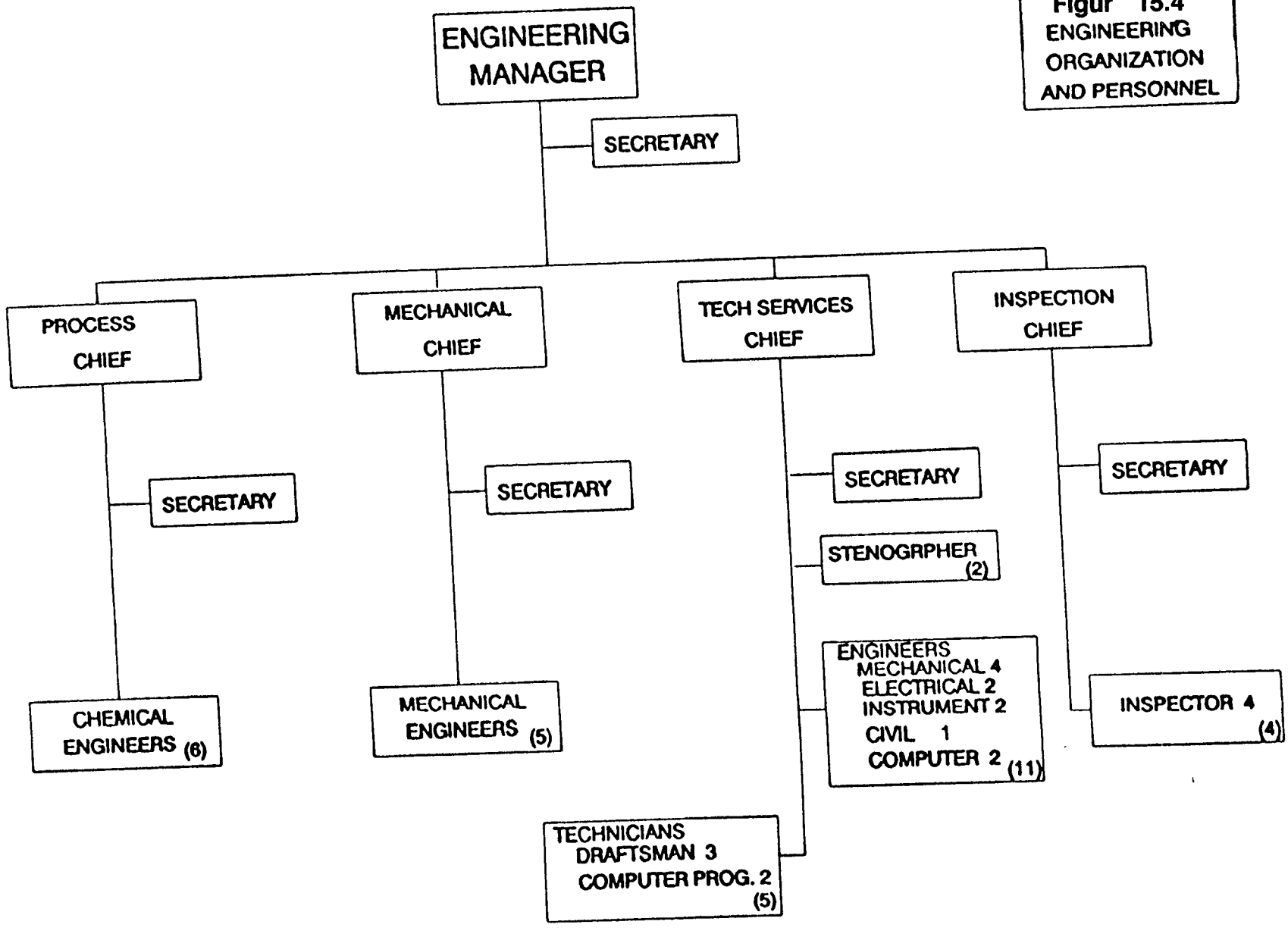

Figur 15.4
ENGINEERING ORGANIZATION AND PERSONNEL

Figur 15.5

ENVIRONMENT, HEALTH, SAFETY AND SECURITY ORGANIZATION AND PERSONNEL

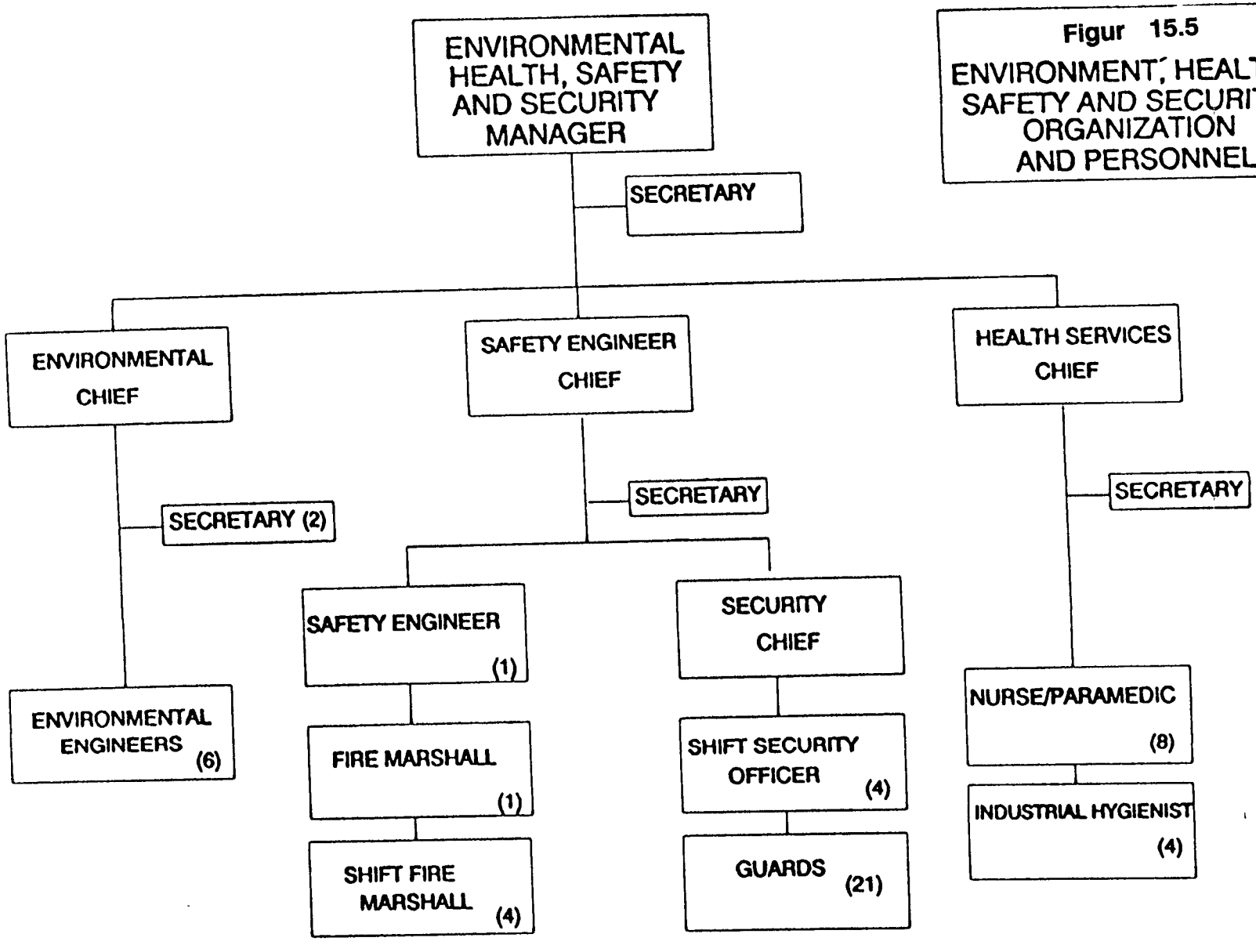

Figur 15.6
ADMINISTRATIVE ORGANIZATION AND PERSONNEL

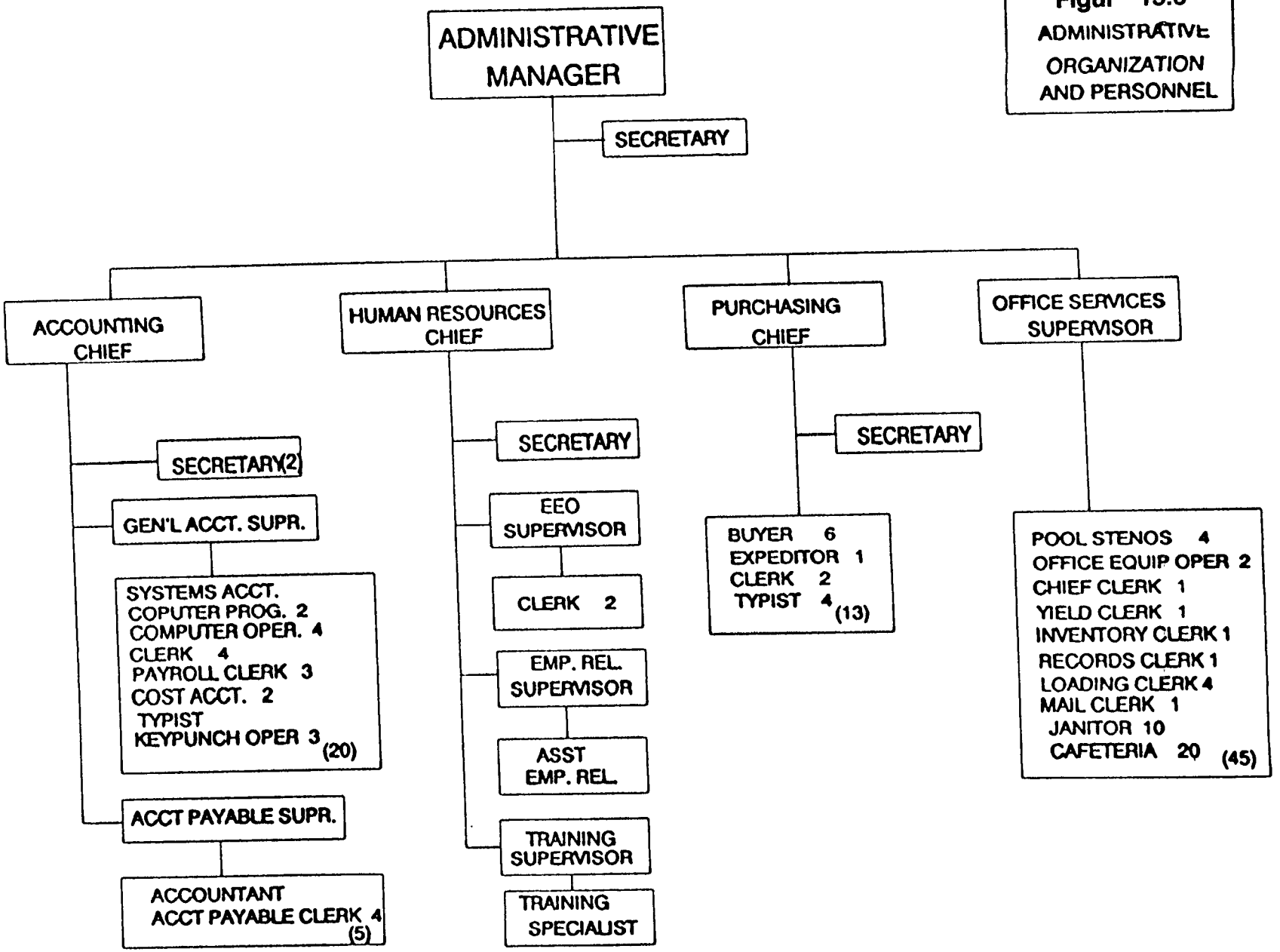

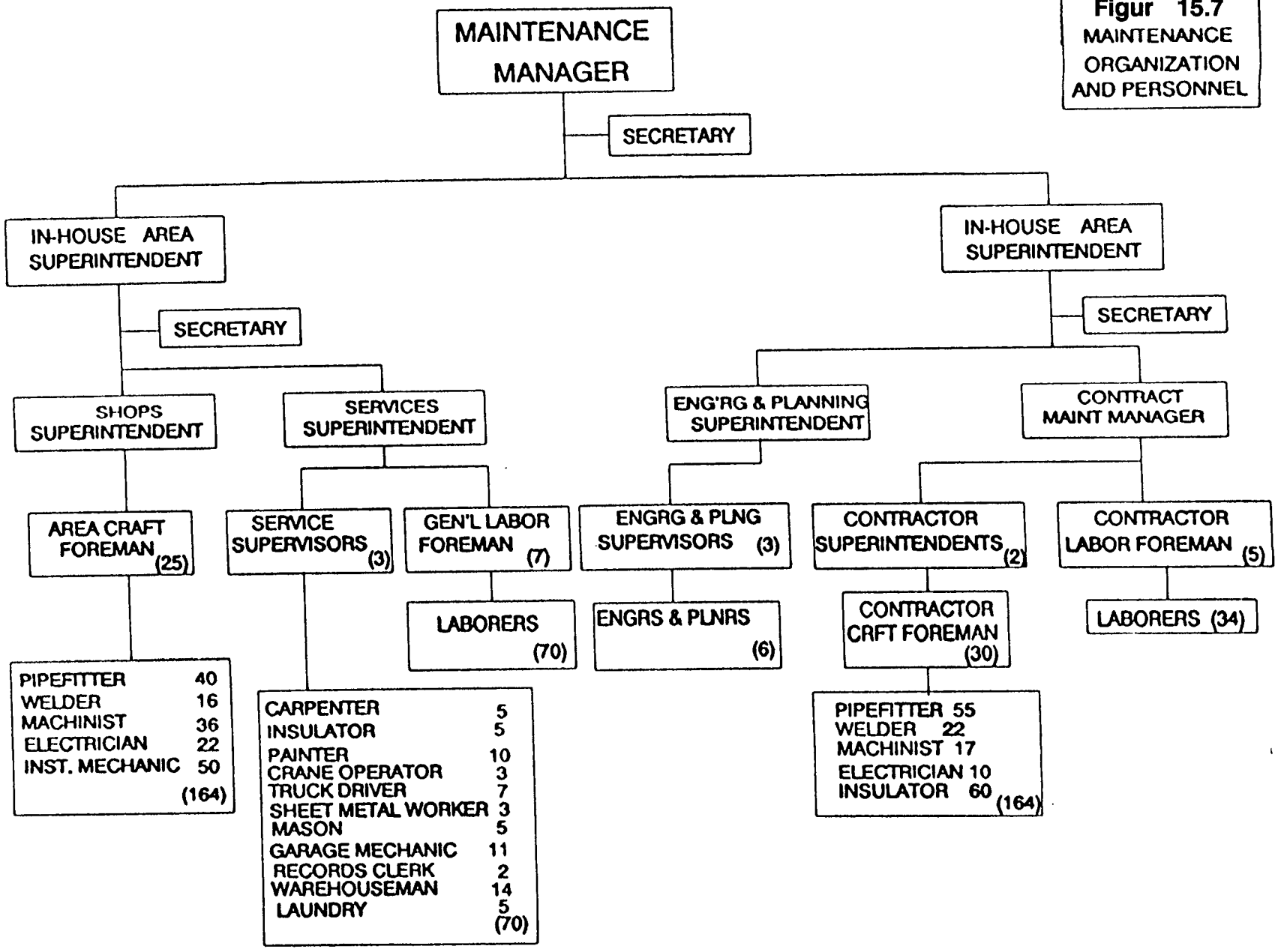

Figur 15.7
MAINTENANCE ORGANIZATION AND PERSONNEL

Figur 15.8
Operators
Organization and Personnel
for Improved Baseline
Plus Option 6

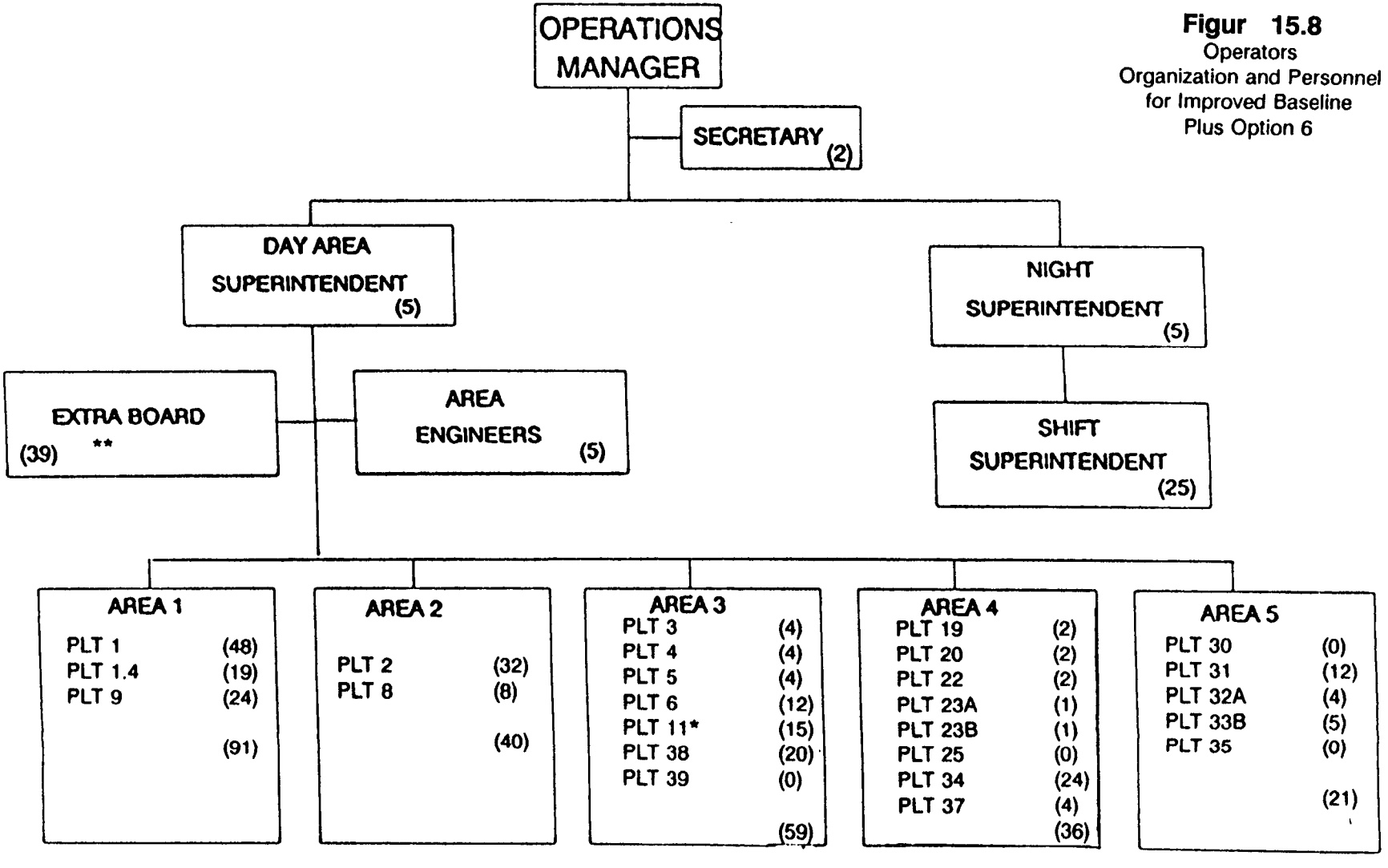

* Assume Plant 11 has 3 trains for operators calculation

** Extraboard has been prorated based on the total number of area operators for the baseline and this case.

15.2 Bas Wages and Salaries

The base wages and salaries for the improved baseline is the same as they are for the baseline. These are shown in Table 15.1 below.

The numbers shown in this table are the same for both the improved baseline and the improved baseline with option 6 (natural gas reforming for hydrogen production) cases.

Table 15.1

Base Wages and Salaries

Category	Annual Salary Dollars
Plant Manager	94,000
Functional Manager	83,000
Shift Leader (Engineers/Chemists)	72,000
Area Supervisor	64,000
Area Engineers	56,000
Engineers	49,600
Adm. Secretary (Plant Manager)	27,000
Adm. Secretary (Functional Manager)	24,000
Secretary	21,500
Crafts	**Hourly Rate Dollars**
Insulators	23.23
Painters	19.30
Plumbers & Gas Fitters	19.20
Sheet Metal Worker	18.55
Steam Fitters	21.59
Boilermakers	21.15
Carpenters	19.41
Electricians	22.17
Masons	19.65

16. OVERALL PRODUCT/BY-PRODUCT VALUES

16. Ov rall Product/By-product Values (Improved Baseline)

Product

The in-depth discussion on product values is included in Section 13 of this report. The product valuations (expressed as syncrude premium) range from 1.07 to 1.27. The upper (1.27) and lower limits (1.07) will be utilized in the economics section.

By-product

The by-products for this complex are sulfur, ammonia, phenol, propane and mixed butanes. The production rate of these streams for the improved baseline case and their respective prices are shown below.

Table 16.1

By-product Values

	Production Rate	Price
Sulfur	858.8 STPD	$80/ton
Ammonia	276.6 STPD	$120/ton
Phenol	38.5 STPD	$400/ton
Propane	3884 BPSD	$7.50/bbl
Mixed Butanes	2230 BPSD	$14.50/bbl

17. ECONOMICS

17. Economics

The economic analysis to determine the Crude Oil Equivalent price (COE) in $/bbl was carried out by using the LOTUS 1-2-3 based spreadsheet model developed by Amoco. There were several key assumptions made in carrying out this analysis.

17.1 Key Assumptions

Project Start Date	January, 1992
Years of construction	4
Years of operation	25
Depreciation, Years	10
Maintenance, % initial capital	1
Working capital, % revenue	10
Working capital, % liquid	50
Owner's cost, % initial capital first year operation	5
Bank interest rate	8
Federal income tax rate, %	34
Percent equity	25
Percent IRR on equity	15
General inflation %	3
Raw material price escalation	same as general inflation of 3%
State Tax	0
SCP	1.07

17.2 Results

The results of the economic analysis are presented separately for the improved baseline and improved baseline with the best options. Such results are shown in Tables 17.1 and 17.2, respectively. They were obtained at 15% IRR on equity. Each of these two tables have three sections. These are: 1) Model Input Section (based on overall plant material balance), 2) Input Data Relating to Key Assumptions, Construction, Schedules, and Feed And Product Costs, and 3) Results Summary.

As shown in Table 17.1, the improved baseline requires an equivalent crude oil price of $33.45/bbl. For the best option where hydrogen is generated by natural gas reforming, the Crude Oil Equivalent price is $31.00/bbl (as shown in Table 17.2).

Table 17.1
Economic Analysis of Improved Baseline Case

Model Input (based on overall plant material balance)

ROM coal feed rate, MTSD[1]	32.6
Coal cleaning refuse rate, MTSD[1]	6.5
Ash production rate, MTSD[1]	3.2
Natural Gas rate, MMMBTU/SD	83.93
Electricity purchase, MEGA-WH/SD	0.00
Raw water make-up, MMGSD	16.9
Naphtha production, MBSD	18.52
Light Distillate production, MBSD	7.40
Heavy Distillate Production, MBSD	27.59
Gas oil production, MBSD	21.37
Liquid propane production, MBSD	3.88
Mixed Butanes production, MBSD	2.23
Ammonia production, MTSD[1]	0.28
Phenol production, MTSD[1]	0.04
Sulfur production, MTSD[1]	0.86
Number of operators/boardmen	420
Total installed capital, $MM (E-yr)	3531.9 Mid-1991 $

TABLE 17.1 - continued

Input data relating to key assumptions, construction schedule, and feed and product costs

Total installed capital, $MM (base year)	3584.5
Operating Factor, percent	88.4
Percent plant operational, 1st yr.	100.0
Percent plant operational, 2nd yr.	100.0
Percent Plant operational, 3rd yr.	100.0
Refuse Disposal Cost, $/S-ton (base yr)	2.00
Ash Disposal cost, $S-ton (base yr)	5.00
Catalyst & Chemicals f(prod), $MM/MBSD (base yr)	1.16*
Operator pay rate, $/op./hr. (base yr)	20.50
Overhead factor (benefits, etc)	1.40
Other labor costs, $MM/yr (base yr)	15.86
Maintenance, taxes & insurance % init. cap.	1.00
Sales, Admin., Research, $MM/yr (base yr)	0.0
Percent capital 1st yr. construction	20.0
Percent capital 2nd yr. construction	30.0
Percent capital 3rd yr. construction	30.0
Percent capital 4th yr. construction	20.0
Working capital percent revenue	10.0
Percent liquid of working cap.	50.0
Owner's cost, % init. cap., 1st yr op.	5.00
ROM coal (MF) price, $/S-ton (base yr)	20.50
Natural gas price, $/MMBTU (base yr)	2.00
Electricity price, $/KWH (base yr)	0.050
Raw water, $/MGAL (base yr)	0.10
General inflation, percent/yr	3.00
Constr. cost index (CCI), %/yr	3.00
Coal escalation+, percent/yr	3.00
Crude oil escalation+, percent/yr	3.00
Natural gas escalation+, percent/yr	3.00
Naphtha syncrude prem.	1.07
Naphtha price, $BBL (base yr)	0.00
Light distillate syncrude prem.	1.04

TABLE 17.1 - continued

Light distillate price, $/BBL (base yr)	0.00
Heavy distillate syncrude prem	1.09
Heavy distillate price, $BBL (base yr)	0.00
Gas oil syncrude prem.	1.04
Gas oil price, $/BBL (base yr)	0.00
Liquid propane price, $/BBL (base yr)	7.50
Mixed butane price, $/BBL (base yr)	14.50
Ammonia price, $S-ton (base yr)	120.00
Mixed Phenol price, $/S-ton (base yr)	400.00
Sulfur price, $/short-ton (base yr)	80.00
Construction start = Jan 1 (base yr)	1992
Percent equity	25
Imputed interest rate, %/yr	0.00
Bank interest rate, percent/yr	8.00
Federal income tax rate, %/yr	34.00
State income tax rate, %/yr	0.00
Fixed cost, % init. cap. (0 = not used)	0.00
Term of loan, years (fixed)	10
Years of construction (fixed	4
Years of operation (fixed)	25
Depreciation, years (fixed)	10

Result Summary

Base year	1992
Total Capital	$3584.5 MM
Syn Crude Premium	1.07
Crude Oil Equivalent (PADD II)	33.45 $/BBL (base yr)

(1) Rates are in 1000 short tons per stream day

Note:

M= 1000X
MM = 1000 X M
MMM = 1000 X MM

* Calculated value
\+ Inflation included

Table 17.2
Economic Analysis of Improved Baseline Case with the Best Option

Model Input (based on overall plant material balance)

ROM coal feed rate, MTSD[1]	23.3
Coal cleaning refuse rate, MTSD[1]	4.7
Ash production rate, MTSD[1]	2.9
Natural Gas rate, MMMBTU/SD	281.16
Electricity purchase, MEGA-WH/SD	-1043.02
Raw water make-up, MMGSD	19.8
Naphtha production, MBSD	18.52
Light Distillate production, MBSD	7.40
Heavy Distillate Production, MBSD	27.59
Gas oil production, MBSD	21.37
Liquid propane production, MBSD	3.88
Mixed Butanes production, MBSD	2.23
Ammonia production, MTSD[1]	0.27
Phenol production, MTSD[1]	0.05
Sulfur production, MTSD[1]	0.46
Number of operators/boardmen	272
Total installed capital, $MM (E-yr)	2724.5 Mid-1991 $

TABLE 17.2 - continued

Input data relating to key assumptions, construction schedule, and feed and product costs

Total installed capital, $MM (base year)	2765.1
Operating Factor, percent	88.4
Percent plant operational, 1st yr.	100.0
Percent plant operational, 2nd yr.	100.0
Percent Plant operational, 3rd yr.	100.0
Refuse Disposal Cost, $/S-ton (base yr)	2.00
Ash Disposal cost, $S-ton (base yr)	5.00
Catalyst & Chemicals, f(prod), $MM/MBSD (base yr)	1.16*
Operator pay rate, $/op./hr. (base yr)	20.50
Overhead factor (benefits, etc)	1.40
Other labor costs, $MM/yr (base yr)	15.86
Maintenance, taxes & insurance % init. cap.	1.00
Sales, Admin., Research, $MM/yr (base yr)	0.00
Percent capital 1st yr. construction	20.0
Percent capital 2nd yr. construction	30.0
Percent capital 3rd yr. construction	30.0
Percent capital 4th yr. construction	20.0
Working capital percent revenue	10.0
Percent liquid of working cap.	50.0
Owner's cost, % init. cap., 1st yr op.	5.00
ROM coal (MF) price, $/S-ton (base yr)	20.50
Nat. gas price, $/MMBTU (base yr)	2.00
Electricity price, $/KWH (base yr)	0.050
Raw water, $/MGAL (base yr)	0.10
General inflation, percent/yr	3.00
Constr. cost index (CCI), %/yr	3.00
Coal escalation+, percent/yr	3.00
Crude oil escalation+, percent/yr	3.00
Natural gas escalation+, percent/yr	3.00
Naphtha syncrude prem.	1.07
Naphtha price, $BBL (base yr)	0.00
Light distillate syncrude premium	1.04

TABLE 17.2 - continued

Light distillate price, $/BBL (base yr)	0.00
Heavy distillate syncrude prem	1.09
Heavy distillate price, $BBL (base yr)	0.00
Gas oil syncrude prem.	1.04
Gas oil price, $/BBL (base yr)	0.00
Liquid propane price, $/BBL (base yr)	7.50
Mixed butane price, $/BBL (base yr)	14.50
Ammonia price, $S-ton (base yr)	120.00
Mixed Phenol price, $/S-ton (base yr)	400.00
Sulfur price, $/short-ton (base yr)	80.00
Construction start = Jan 1 (base yr)	1992
Percent Equity	25
Imputed interest rate %/yr	0.00
Bank interest rate, percent/yr	8.00
Federal income tax rate, %/yr	34.00
State income tax rate, %/yr	0.00
Fixed Cost, % initial capital (0 = not used)	0.00
Term of loan, years (fixed)	10
Years of construction (fixed	4
Years of operation (fixed)	25
Depreciation, years (fixed)	10

Result Summary

Base year	1992
Total Capital	$2765.10 MM
Syn Crude Premium	1.07
Crude Oil Equivalent (PADD II)	31.00 $/BBL (base yr)

(1) Rates are in 1000 short tons per stream day

Note:

M = 1000X
MM = 1000 X M
MMM = 1000 X MM

* Calculated value
\+ Inflation included

17.3 Sensitivities on Economics

The sensitivity analysis on economics was done to determine the impact of changes in capital, raw material, owner's equity, price escalation (per EIA) on coal, natural gas and crude oil, and syncrude premium, respectively. Results of this analysis are given in Table 17.3.

Table 17.3
Economic Results and Sensitivities

ECONOMICS	
Improved Baseline	$33.45/bbl

SENSITIVITIES		
Item	**Change**	**Δ $/bbl**
• Capital	± 10%	± 1.95
	± 25%	± 4.95
• Raw Material		
Coal	± 25%	± 2.10
Natural Gas	± 25%	± 0.55
• Owner's Equity	± 100%	± 3.05
• Price Escalation, per EIA		
Coal	+1.6	- 7.45
Natural Gas	+3.5	
Crude oil	+2.9	
• Syncrude Premium	+0.20	- 5.35
• Improved Baseline with H_2 production from natural gas		- 2.45

As shown in this table, a change in capital cost by 10% changes the Crude Oil Equivalent price by $1.95/bbl and a 25% change causes a change of $4.95/bbl for the Crude Oil Equivalent price. A 25% change in coal and natural gas price individually changes the Crude Oil Equivalent price by $2.10/bbl and $0.55/bbl respectively.

The increase of owner's equity by 100% (25% to 50%) increases the Crude Oil Equivalent price by $3.05/bbl.

When coal, natural gas and crude oil are individually allowed to escalate per EIA, instead of at the fixed rate of 3% (inflation), the equivalent crude oil price decreases by 7.45/bbl. The increase in syncrude premium to 1.27 results in a drop of the Crude Oil Equivalent price by $5.35/bbl.

18. DISCUSSION

18. Discussion

The study results presented in the various sections of this report are for an improved baseline of this study, which are based on more recent data from the Wilsonville pilot plant and are more relaxed than the baseline study. The precision and accuracy of the study results (both improved as well as baseline): engineering, capital cost estimates and economic evaluation are all subject to the scope and constraints of the study and the assumptions made during execution of the study. A list of assumptions were followed during the economic evaluation and they were the same for both cases. These assumptions are included in Section 17 of this report. Besides them there are a number of common inherent limitations for both cases of the study. Some of these common limitations are discussed below:

Capital cost estimates were made with an accuracy of ± 30%. This level of accuracy in cost estimates did not require a detailed engineering of plants.

Capital cost estimates were based on the "Nth plant" concept and the plant operating factor were assumed to be the same as the "First plant". The "Nth plant" assumes that the technology for direct liquefaction of coal is a mature technology and that there are many similar plants already constructed and operating. Therefore, the uncertainties regarding engineering, construction and operability of a "Nth plant" are at a minimal level.

- The valuation of the various product streams was achieved by introducing syncrude premium factor (SCP) which relates the coal liquefaction plant product values to a typical crude oil in a PADD II refinery. Although SCP was determined in a rigorous manner using the Bechtel proprietary linear programming (LP) refinery model, PIMS, this is not an exact number. The PIMS LP model was developed based on a typical petroleum refinery located in PADD II making two different product slates. The behavior of the coal liquid products in the refinery was estimated based on the published properties and processing data of similar coal liquids. Because availability of such data are limited at present, improvement can only be achieved by having better characterization data of various streams.

Although the above mentioned limitations are inherent for the baseline as well as for the improved baseline studies, comparisons of the results of the economic evaluation on relative basis should be reasonably accurate.

With reference to ASPEN/SP modeling and modeling tools, the modeling package developed for the improved baseline is an extension of what was developed for the baseline. The modeling package developed for this study should be considered as a research guidance tool, and not a detailed process design tool. It was designed only to predict the effects of various process and operation changes on the overall plant material and utility balances, operating labor, and capital costs.

Comparison of the model predictions for various feed and product rates for the ISBL plants as well as the capital costs for each ISBL plant with the corresponding numbers

obtained during design and cost estimating are shown in Tables 11.1 and 11.2 of this report. Table 11.1 compares such results for the improved baseline whereas Table 11.2 shows the comparison for the improved baseline with hydrogen production by steam reforming of natural gas option. These comparisons demonstrate that the model predicts reasonably well the capital costs of each ISBL plants as well as the feed and product flow rates of each ISBL plants.

In conclusion, the increase in coal space velocity through the liquefaction reactor has a definite economic incentive. The results on the economic evaluation for the improved baseline have demonstrated that the Crude Oil Equivalent (COE) price could be reduced by $5.10 per barrel when the coal space velocity (lb MAF coal/hr/lb catalyst) is increased from 1.12 (baseline) to 1.95 (improved baseline). Such a reduction in COE price is realizable because this increase in space velocity increases the feed coal processing rate to the complex by about 12% with a lesser number of coal liquefaction reactors (4 trains for the improved baseline design case, as opposed to 5 similar trains for the baseline design case). A further reduction of $2.45 per barrel on COE could be achievable by allowing hydrogen to be produced by natural gas reforming.

Besides economics, the modeling tools developed during this study predict reasonably well the capital costs, and feed and product flow rates through each ISBL plants. Moreover, the modeling tools should be considered as a research guidance tool, and not a process design tool.

APPENDIX A

APPENDIX A

ASPEN/SP PROCESS SIMULATION MODEL INPUT FILE FOR THE IMPROVED BASELINE DESIGN CASE

ASPEN/SP PROCESS SIMULATION MODEL INPUT

FILE FOR THE IMPROVED BASELINE DESIGN CASE

```
NEW
;
;   File: OPT8.INP
;
TITLE 'OPT8 - DIRECT COAL LIQUEFACTION - HIGH SPACE VELOCITY CASE'
;
DESCRIPTION &
  "ASPEN/SP INPUT FILE FOR SIMULATING THE HIGH SPACE VELOCITY DESIGN
   FOR THE COAL LIQUEFACTION PLANT UNDER THE NTH PLANT SCENARIO.  WITH
   A MINOR CHANGE, THIS FILE ALSO CAN SIMULATE THE HYDROGEN PRODUCTION
   BY STEAM REFORMING OF NATURAL GAS.  THE NAPHTHA REFORMING OPTION
   ALSO CAN BE RUN BY ANOTHER MODIFICATION TO THIS INPUT FILE."
;
;  NOTES:
;  1.  The dry clean coal feed rate to the Plant 2 coal liquefaction
;      reactors is set in the design specification DES-SPEC COALFLO.
;  2.  Hydrogen production by steam reforming of natural gas with an
;      FBC unt is activated by variable N9 in Fortran block OPTION6.
;      When N9 = 1, this option is invoked.
;      FOR THE HIGH SPACE VELOCITY CASE WITH THIS OPTION
;        o  Force 6 trains in Plant 1, the coal cleaning plant, by
;           setting INT 3 in block P1-BASE to 6.
;  3.  Option 7 (naphtha reforming) is activated in Block S7 by
;      sending all the hydrotreated naphtha to Plant 7 rather than
;      to the product PNAHTHA.
;  4.  The costing logic is controlled by switches in Fortran block
;      SUMMARY.
;
;   Last revision - January 19, 1993.
;
;   Prepared under DOE contract no. DE-AC22 90PC89857.
;
IN-UNITS  ENG
OUT-UNITS ENG
HISTORY-UNITS ENG
RUN-CONTROL MAX-ERRORS=100
;
;  The following two lines are used with V8.0 to produce the overall
;  and block elemental balances.
;REPORT ATOMBAL
;BLOCK-REPORT ATOMBAL
;
HISTORY  MSG-LEVEL  PROPERTIES=2
  MAX-PRINT  PROPERTIES=100  SIMULATION=2000
;
PROPERTIES SYSOP2 GLOBAL
;
PSEUDO-COMPS
  METHOD METCCOAL -1 -1 -1 -1 -1 -1 -1 -1 -1 -1 -1 -1 -1 -1 -1 -1 -1 -1 &
                  -1 -1 -1 -1 -1 -1 -1
```

```
;  The following APIs and MWs are revised from the ASPEN/SP predictions.
;  Component T1000+ is the 1000+ F material leaving the second coal
;    liquefaction reactor in Plant 2.
;  Component I1000+ is the 1000+ F intermediate material leaving the
;    first coal liquefaction reactor in Plant 2.
   COMPONENT T125   TBP=324.82 <K>  API=67.91  MW= 82.27
   COMPONENT T175   TBP=352.59 <K>  API=61.99  MW= 92.77
   COMPONENT T225   TBP=380.37 <K>  API=56.21  MW=102.84
   COMPONENT T275   TBP=408.15 <K>  API=50.60  MW=112.50
   COMPONENT T325   TBP=435.93 <K>  API=45.18  MW=121.82
   COMPONENT T375   TBP=463.71 <K>  API=39.96  MW=130.86
   COMPONENT T425   TBP=491.48 <K>  API=34.96  MW=139.75
   COMPONENT T475   TBP=519.26 <K>  API=30.19  MW=148.60
   COMPONENT T525   TBP=547.04 <K>  API=25.66  MW=157.54
   COMPONENT T575   TBP=574.82 <K>  API=21.39  MW=166.69
   COMPONENT T625   TBP=602.59 <K>  API=17.38  MW=176.16
   COMPONENT T675   TBP=630.37 <K>  API=13.66  MW=186.05
   COMPONENT T725   TBP=658.15 <K>  API=10.23  MW=196.44
   COMPONENT T775   TBP=685.93 <K>  API= 7.09  MW=207.37
   COMPONENT T825   TBP=713.71 <K>  API= 4.27  MW=218.85
   COMPONENT T875   TBP=741.48 <K>  API= 1.78  MW=230.87
   COMPONENT T925   TBP=769.26 <K>  API=-0.39  MW=243.37
   COMPONENT T975   TBP=797.04 <K>  API=-2.22  MW=256.24
   COMPONENT T1000+ TBP=824.82 <K>  API=-3.69  MW=269.33
   COMPONENT P125   TBP=324.82 <K>  API=67.91  MW= 82.27
   COMPONENT P175   TBP=352.59 <K>  API=61.99  MW= 92.77
   COMPONENT P225   TBP=380.37 <K>  API=56.21  MW=102.84
   COMPONENT P275   TBP=408.15 <K>  API=50.60  MW=112.50
   COMPONENT P325   TBP=435.93 <K>  API=45.18  MW=121.82
   COMPONENT P375   TBP=463.71 <K>  API=39.96  MW=130.86
   COMPONENT P425   TBP=491.48 <K>  API=34.96  MW=139.75
   COMPONENT P475   TBP=519.26 <K>  API=30.19  MW=148.60
   COMPONENT P525   TBP=547.04 <K>  API=25.66  MW=157.54
   COMPONENT P575   TBP=574.82 <K>  API=21.39  MW=166.69
   COMPONENT P625   TBP=602.59 <K>  API=17.38  MW=176.16
   COMPONENT P675   TBP=630.37 <K>  API=13.66  MW=186.05
   COMPONENT P725   TBP=658.15 <K>  API=10.23  MW=196.44
   COMPONENT P775   TBP=685.93 <K>  API= 7.09  MW=207.37
   COMPONENT P825   TBP=713.71 <K>  API= 4.27  MW=218.85
   COMPONENT P875   TBP=741.48 <K>  API= 1.78  MW=230.87
   COMPONENT P925   TBP=769.26 <K>  API=-0.39  MW=243.37
   COMPONENT P975   TBP=797.04 <K>  API=-2.22  MW=256.24
   COMPONENT P1000+ TBP=824.82 <K>  API=-3.69  MW=269.33
   COMPONENT I1000+ TBP=825.00 <K>  API=-4.00  MW=275.00
   COMPONENT REFORMAT TBP=390.00 <K>  API=38.25  MW=100.00
;
COMPONENTS H2 H2 / N2 N2 / O2 O2 / H2S H2S / CO CO / CO2 CO2 / NH3 H3N /
           L-SULFUR SULFUR / H2O H2O / HCL HCL / COS COS / CH4 CH4 /
           C2H6 C2H6 / C3H8 C3H8 / IC4H10 C4H10-2 / NC4H10 C4H10-1 /
           IC5H12 C5H12-2 / NC5H12 C5H12-1 /
;  Pseudocomponents
           T125 / T175 / T225 / T275 / T325 / T375 / T425 / T475 /
           T525 / T575 / T625 / T675 / T725 / T775 / T825 / T875 /
           T925 / T975 / T1000+ /
           P125 / P175 / P225 / P275 / P325 / P375 / P425 / P475 /
```

```
          P525 / P575 / P625 / P675 / P725 / P775 / P825 / P875 /
          P925 / P975 / P1000+ / I1000+ / REFORMAT /
;  Non-conventional components
           COAL / URCOAL / SLAG
;
FORMULA    H2 H2 / N2 N2 / O2 O2 / H2S H2S / CO CO / CO2 CO2 / NH3 H3N /
           L-SULFUR S / H2O H2O / HCL HCL / COS COS / CH4 CH4 /
           C2H6 C2H6 / C3H8 C3H8 / NC4H10 C4H10 / IC4H10 C4H10 /
           NC5H12 C5H12 / IC5H12 C5H12
;
;  Load the liquid sulfur (L-SULFUR) physical properties as taken from
;  DIPPR - MW adjusted to be consistent with ASPEN.
PROP-DATA  IN-UNITS SI
  PROP-LIST        MW    /   TC    /     PC     /    VC    /   ZC
  PVAL L-SULFUR   32.06  / 1313.0 / 1.8208E+7 / 0.15800 / 0.2640
  PROP-LIST       MUP    /  OMEGA /    TB     /   RGYR
  PVAL L-SULFUR   0.0    / 0.2624 /  717.82   /   0.0
  PROP-LIST         DELTA   /  DGFORM   /  DHFORM
  PVAL L-SULFUR   2.0245E+4 / 2.3825E+8 / 2.7880E+8
  PROP-LIST       CPIG
  PVAL L-SULFUR   2.5639E+4  -7.9870  4.7860E-3  -9.5700E-7  0.0  0.0  &
                  273.15  1500.0  0.0  87.113  1.0
;
; Load the solubility parameter for COS from the API Tech Data Book.
  PROP-LIST       DELTA
  PVAL COS        18179.0
;
;  Reset some component molecular weights to be consisitent with the
;  following elemental atomic weights, where needed.
;  H=1.0079, C=12.011, O=15.9994, N=14.0067, S=32.06 & Cl=35.453
  PROP-LIST       MW
  PVAL H2          2.0158
  PVAL N2         28.0134
  PVAL O2         31.9988
  PVAL H2S        34.0758
  PVAL CO         28.0104
  PVAL CO2        44.0098
  PVAL NH3        17.0304
  PVAL H2O        18.0152
  PVAL HCl        36.4609
  PVAL COS        60.0704
  PVAL CH4        16.0426
  PVAL C2H6       30.0694
  PVAL C3H8       44.0962
  PVAL IC4H10     58.1230
  PVAL NC4H10     58.1230
  PVAL IC5H12     72.1498
  PVAL NC5H12     72.1498
;
;  Set the specific gravities of H2, CO, CO2, NH3, H2S, N2 and COS to
;  the values given in the API Technical Data Book - Petroleum Refining.
  PROP-LIST        SPGR
  PVAL H2         0.3000
  PVAL CO         0.3000
  PVAL CO2        0.8180
```

```
  PVAL NH3        0.6162
  PVAL H2S        0.8014
  PVAL N2         0.8094
  PVAL COS        1.0200
;
ATTR-COMPS COAL   PROXANAL ULTANAL SULFANAL AOXANAL
ATTR-COMPS URCOAL PROXANAL ULTANAL SULFANAL AOXANAL
ATTR-COMPS SLAG   PROXANAL ULTANAL SULFANAL AOXANAL
;
NC-PROPS    COAL ENTHALPY  HCOALGEN /
                 DENSITY   DCOALIGT
NC-PROPS  URCOAL ENTHALPY  HCOALGEN /
                 DENSITY   DCHARIGT
NC-PROPS    SLAG ENTHALPY  HCOALGEN /
                 DENSITY   DCHARIGT
;
DEF-STREAMS MIXNC ALL
;
;  Set an initial GUESS for the ROM COAL stream to Plant 1.
STREAM ROMCOAL
   SUBSTREAM MIXED TEMP = 71.0  PRES = 14.7
     MASS-FLOW  H2O 24798.0
   SUBSTREAM NC TEMP = 71.0  PRES = 14.7
     MASS-FLOW  COAL 285035.0 / URCOAL 0.0 / SLAG 0.0
     COMP-ATTR COAL   PROXANAL (0.0 42.06 36.24 21.70) /
                      ULTANAL (21.7 61.1 4.2 1.2 0.1 5.1 6.6) /
                      SULFANAL (3.0 0.3 1.8) /
                      AOXANAL (43.8 17.1 24.1 0.8 0.1 5.6 1.0 0.6 2.1 4.1)
;  Fake the URCOAL properties.
     COMP-ATTR URCOAL PROXANAL (0.0 19.197 16.549 64.254) /
                      ULTANAL (64.254 29.914 0.185 1.304 0.0 4.267 0.076) /
                      SULFANAL (2.507 0.253 1.507) /
                      AOXANAL (43.8 17.1 24.1 0.8 0.1 5.6 1.0 0.6 2.1 4.1)
;  Fake the SLAG properties.
     COMP-ATTR SLAG   PROXANAL (0.0 10.0 0.0 90.0) /
                      ULTANAL (90.0 10.0 0.0 0.0 0.0 0.0 0.0 ) /
                      SULFANAL (0.0 0.0 0.0) /
                      AOXANAL (42.0 17.0 23.0 1.0 1.0 6.0 2.0 1.0 3.0 4.0)
;
;  Set an initial GUESS for the fresh make-up H2 stream to Plant 2.
;  Assume the make-up H2 contains 1.396 wt% nitrogen.
STREAM 2-H2IN
   SUBSTREAM MIXED TEMP = 100.0  PRES = 3440.0
     MASS-FLOW  H2 70300.0 / N2 980.0
;
;  Set an initial GUESS for the total water feed streams (both steam
;  and wash water) to Plant 2.
STREAM 2-H2OIN
   SUBSTREAM MIXED TEMP = 126.0  PRES = 3200.0
     MASS-FLOW  H2O 1073000.0
;
;  Set an initial GUESS for the ROSE EXTRACT stream to Plant 2.
STREAM ROSE-XTR
   SUBSTREAM MIXED TEMP = 300.0  PRES = 3215.0
     MASS-FLOW  T675 332.2 / T725 332.2 / T775 332.2 /
```

```
      T825 332.2 / T875 668.8 / T925 700.6 /
      T975 668.8 /  T1000+ 497957.0
;
;  Set an initial GUESS for the SOLVENT stream to Plant 2.  The user
;  Fortran block model for Plant 2 does not require any solvent, but
;  the input stream is required.  Thus, set a small H2O flow to avoid
;  ASPEN warnings.
STREAM SOLVENT
   SUBSTREAM MIXED TEMP = 500.0  PRES = 500.0
     MASS-FLOW  H2O 1.0
;
;  Set an initial GUESS for the 2S-BOTTS stream leaving Plant 2.
STREAM 2S-BOTTS
   SUBSTREAM MIXED TEMP = 688.0  PRES = 28.0
     MASS-FLOW  H2O 0.0 /
       T825 380.0 / T875 3365.0 /
       T925 3365.0 / T975 3365.0 / T1000+ 642440.0
   SUBSTREAM NC TEMP = 688.0  PRES = 28.0
     MASS-FLOW  COAL 0.0 / URCOAL 254475.0
;
;  Set an initial GUESS for the H2 stream to Plant 4.
;  Assume the make-up H2 contains 1.396 wt% nitrogen.
STREAM 4-H2IN
   SUBSTREAM MIXED TEMP = 70.0  PRES = 500.0
     MASS-FLOW  H2 1400.0 / N2 19.0
;
;  Set an initial GUESS for the H2O stream to Plant 4.
STREAM 4-H2OIN
   SUBSTREAM MIXED TEMP = 70.0  PRES = 50.0
     MASS-FLOW  H2O 18770.
;
;  Set an initial GUESS for the H2 stream to Plant 5.
;  Assume the make-up H2 contains 1.396 wt% nitrogen.
STREAM 5-H2IN
   SUBSTREAM MIXED TEMP = 70.0  PRES = 500.0
     MASS-FLOW  H2 17000.0 / N2 279.0
;
;  Set an initial GUESS for the H2O stream to Plant 5.
STREAM 5-H2OIN
   SUBSTREAM MIXED TEMP = 70.0  PRES = 50.0
     MASS-FLOW  H2O 36382.0
;
;  Set an initial GUESS for the pseudo sour H2O from Plant 6.
STREAM 6S-SH2O
   SUBSTREAM MIXED TEMP = 60.0  PRES = 14.7
     MASS-FLOW  NH3 2830.0
;
;  Set an initial GUESS for the H2O stream to Plant 9.0.
STREAM 9-H2OIN
   SUBSTREAM MIXED TEMP = 70.0  PRES = 14.7
     MASS-FLOW  H2O 967545.0
;
;  Set an initial GUESS for the STEAM stream to Plant 9.0.
STREAM 9-STEMIN
   SUBSTREAM MIXED TEMP = 450.0  PRES = 500.0
```

```
     MASS-FLOW  H2O 167545.0
;
;  Set an initial GUESS for the OXYGEN stream to Plant 9.0.
STREAM 9-O2IN
   SUBSTREAM MIXED TEMP = 80.0  PRES = 300.0
     MASS-FLOW  O2 743531.0 / N2 3269.0
;
;  Set an initial GUESS for the AIR stream to Plant 10.
STREAM 10-AIRIN   TEMP = 70.0  PRES = 14.7
     MASS-FLOW  O2 743531.0 / N2 2463614.0
;
;  Set an initial GUESS for the CH4 stream to Plant 9.1.
STREAM NAT-GAS
   SUBSTREAM MIXED TEMP = 70.0  PRES = 100.0
     MASS-FLOW  CH4 307352.
;
;  Set an initial GUESS for the STEAM stream to Plant 9.1.
STREAM STEAM
   SUBSTREAM MIXED TEMP = 620.0  PRES = 500.0
     MASS-FLOW  H2O 864428.
;
; Model Connectivity
; ------------------
;
FLOWSHEET COAL
; Plant M1 is the clean coal outlet streams mixer.
;   Stream 1S-CCOAL is the combined outlet clean coal product stream.
; Plant M2 is the middling coal outlet streams mixer.
;   Stream 1S-XMID  is the combined outlet middling coal product stream.
; Plant M-2HYD is the mixer to combine H2 streams for Plant 2.
;   Stream 2-H2MIX  is the combined H2 stream from 6.1, 6.2, & source.
; Plant M3 is the refuse outlet streams mixer.
;   Stream 1S-REFSE is the combined outlet refuse product stream.
; Plant M38 is the sour water mixer.
;   Stream 38-FEED  is the combined sour water streams to Plant 38.
; Plant M4 is the waste water outlet streams mixer.
;   Stream 1S-WATER is the combined outlet waste water product stream.
; Plant M-462 is the mixer to combine H2 streams for Plant 6.2.
;   Stream 62-HYD   is the combined H2 stream from Plants 2 & 4.
; Plant M-561 is the mixer to combine H2 streams for Plant 6.1.
;   Stream 61-HYD   is the combined H2 stream from Plants 2 & 5.
; Plant M-6GAS is the heater to combine sour gas streams for Plant 11.
;   Stream 6-SGAS   is the combined sour gas stream from Plants 6.1 & 6.2.
; Plant M-73 is the mixer to combine H2 gas streams for Plant 3.
;   Stream 3-GAS    is the combined H2 gas stream from Plant 3.
; Plant M-HYD is the mixer (flash2) to combine H2 streams for M-2HYD.
;   Stream H2MIX    is the combined H2 stream from Plants 6.1 & 6.2.
;   Stream DUMMY    is the dummy vapor stream that contains no flow.
; Plant M-NAP is the mixer to combine naphtha streams for Plant 4.
;   Stream 4-FEED   is the combined naphtha stream from Plants 2 & 6.2.
; Plant M-PNAP is the mixer to combine product naphtha streams.
;   Stream PS-NAPH is the combined naphtha stream from Plants 4 & 5.
; Plant P1-ALT1 is the Coal Cleaning and Preparation Plant - ALT CASE 1.
;   Stream 1S12     is the outlet clean coal product stream.
;   Stream 1S13     is the outlet middling coal product stream.
```

```
;   Stream 1S14     is the outlet refuse product stream.
;   Stream 1S15     is the outlet waste water product stream.
; Plant P1-ALT2 is the Coal Cleaning and Preparation Plant - ALT CASE 2.
;   Stream 1S22     is the outlet clean coal product stream.
;   Stream 1S23     is the outlet middling coal product stream.
;   Stream 1S24     is the outlet refuse product stream.
;   Stream 1S25     is the outlet waste water product stream.
; Plant P1-BASE is the Coal Cleaning and Preparation Plant - BASE CASE.
;   Stream 1S02     is the outlet clean coal product stream.
;   Stream 1S03     is the outlet middling coal product stream.
;   Stream 1S04     is the outlet refuse product stream.
;   Stream 1S05     is the outlet waste water product stream.
; Plant P14 is the Coal Grinding and Drying Plant.
;   Stream COALTO2  is the outlet clean coal product stream.
;   Stream 14S-XMID is the outlet middling coal product stream.
;   Stream 14S-REF  is the outlet refuse product stream.
;   Stream 14S-WAT  is the outlet waste water product stream.
; Plant P02 is the Coal Liquefaction Plant.
;   Stream 2-H2MIX  is the hydrogen feed stream.
;   Stream COALTO2  is the clean coal feed stream.
;   Stream SOLVENT  is the solvent feed stream.  This stream is used to
;     supply the steam required to Plant 2.
;   Stream ROSE-XTR is the deashed product stream.
;   Stream 2-H2OIN  is the water feed stream to the liquefaction unit.
;   Stream 2S-GAS   is the HP gas product stream going to Plant 6.1.
;   Stream GASES    is the LP gas product stream going to Plant 6.2.
;   Stream NAPHTHA  is the naphtha product stream.
;   Stream GAS-OIL  is the gas-oil product stream going to Plant 5.
;   Stream 2S-BOTTS is the bottoms stream going to Plant 8.1.
;   Stream 2S-SH2O  is the sour water product stream.
; Plant P03 is the Gas Plant.
;   Stream 3S-SGAS  is the sour off-gas product stream.
;   Stream 3S-FGAS  is the fuel gas product stream.
;   Stream 3S-PROP  is the C3 product stream.
;   Stream 3S-BUT   is the C4s product stream.
;   Stream 3S-OIL   is the lean-oil product stream to M-NAP.
;   Stream 3S-SH2O  is the product sour water stream.
; Plant P04 is the simplified model for plant 4, the naphtha hydrotreater.
;   Stream 4-H2IN   is the hydrogen feed stream.
;   Stream 4-H2OIN  is the water feed stream.
;   Stream 4S-GAS   is the hydrotreater off-gas product stream.
;   Stream 4S-NAPH  is the hydrotreated naphtha product stream.
;   Stream 4S-SH2O  is the hydrotreater sour water stream.
; Plant P05 is the simplified model for plant 5, the gas-oil hydrotreater.
;   Stream 5-H2IN   is the hydrogen feed stream.
;   Stream 5-H2OIN  is the water feed stream.
;   Stream 5S-HPGAS is the hydrotreater hi-pressure purge gas stream.
;   Stream 5S-LPGAS is the hydrotreater other gases stream.
;   Stream 5S-NAPH  is the hydrotreated C6-350 F naphtha product stream.
;   Stream P350-450 is the hydrotreated 350 - 450 F product stream.
;   Stream P450-650 is the hydrotreated 450 - 650 F product stream.
;   Stream P650-850 is the hydrotreated 650 - 850 F product stream.
;   Stream 5S-SH2O  is the hydrotreater sour water stream.
; Plant P61 is the model for the Hydrogen purification by Membrane
;     Separation Plant, Plant 6.1.
```

```
;   Stream 61-HYD   is the feed stream to the H2 purification plant.
;   Stream H2-RICH  is the purified H2-rich product gas stream.
;   Stream SOUR-GAS is the sour gas product stream.
;   Stream P61-GAS  is the reject (non-permeate) product gas stream.
; Plant P62 is the model for the Hydrogen purification by Pressure
;     Swing absorption Plant, Plant 6.2.
;   Stream 62-HYD   is the mixed gas feed stream to the PSA hydrogen
;     purification plant.
;   Stream P61-GAS  is the reject gas stream from Plant 6.1, the high
;     pressure section of Plant 6, the hydrogen purification by -
;     membrane permeation section.
;   Stream H2-2RICH is the purified h2-rich product gas stream.
;   Stream SOUR-2GS is the sour gas product stream.
;   Stream GAS-OUT  is the reject product gas stream.
;   Stream NAPHTHA2 is the liquid raw naphtha product stream.
; Plant P07 is the simplified model for Plant 7, the naphtha reformer.
;   Stream 7-NAPH   is the naphtha feed stream.
;   Stream 7S-H2    is the hydrogen rich product gas stream.
;   Stream 7S-GAS   is the light hydrocarbon product gas stream.
;   Stream REFORMED is the reformate product stream.
; Plant P81 is the model for the ROSE-SR Critical Solvent Deashing unit.
;   Stream ROSE-XTR is the deashed product stream.
;   Stream ASH-CONC is the ash concentrate stream.
; Plant P11 is the Sulfur plant.
;   Stream 11S-LIQS is the sulfur product stream.
;   Stream 11S-FGAS contains all the other material in the feed that
;     does not leave in the product SULFUR STREAM.
; Plant P31 is the simplified model for the utility plant.
;   Stream 31S-01   is the dummy product stream.
; Plant P314 is the model for the Fluidized Bed Combustor and the
;  Steam Turbine Generator unit.
;   Stream FBC-FEED is the feed stream to Plant P314.
;   Stream SA6-01   is the combined product stream out of Plant P314.
; Plant P38 is the NH3 recovery plant.
;   Stream NH3-PROD is the product NH3.
;   Stream 38S-OUT  is the reject stream.
; Plant P38A is the reject stream component splitter from plant 38.
;   Stream 38AS-VAP is the vapor stream going to Plant 11.
;   Stream 38AS-LIQ is the liquid stream going to Plant 38B.
; Plant P38B is the liquid reject stream splitter from Plant 38A.
;   Stream WASTE    is the reject portion of the inlet stream which
;     in this model is rejected, but actually goes to the coal
;     gasification plant, if present.
;   Stream 39FEED   is the stream going on to Plant 39.
; Plant P39 is the phenol recovery plant.
;   Stream PHENOL   is the phenol product stream.
;   Stream WASTEH2O is the waste water stream.
; Plant SA6 is the product stream separator from Plant P314.
;   Stream FBC-GAS  is the gas product stream from Plant SA6.
;   Stream FBC-SOL  is the solids product stream from Plant SA6.
; Block S1 is the inlet coal splitter.
;   Stream ROMCOAL  is the inlet ROM coal stream.
;   Stream 1S01     is the splitter outlet to the base case plant.
;   Stream 1S11     is the splitter outlet to the alternate case 1 plant.
;   Stream 1S21     is the splitter outlet to the alternate case 2 plant.
```

```
; Block S2 is the clean coal splitter.
;   Stream 1S-CCOAL is the inlet clean coal stream.
;   Stream COALTO14 is the splitter outlet to plant 2.
;   Stream 9-COAL   is the splitter outlet to plant 9.
; Block S6-SH2O is a component splitter to generate a pseudo sour-water
;   stream from Plant 6 to get the NH3 to Plant 38, the Ammonia Recovery
;   Plant.
;   Stream 6S-SH2O  is the pseudo sour-water stream.
;   Stream 11-FEED  is the Plant 11 feed stream.
; Block S7 is the product naphtha splitter.
;   Stream PS-NAPH  is the inlet product naphtha stream.
;   Stream 7-NAPH   is the splitter outlet to the naphtha reformer plant.
;   Stream PNAPHTHA is the splitter outlet as product naphtha.
; Block S8 is the ash-concentrate splitter.
;   Stream ASH-CONC is the inlet ash-concentrate stream from the ROSE.
;   Stream FBC-FEED is the splitter outlet to the FBC plant.
;   Stream S8-ASHC  is the splitter outlet to the M9C coal mixer.
;
  M1        IN = 1SO2 1S12 1S22   OUT = 1S-CCOAL
  M2        IN = 1SO3 1S13 1S23   OUT = 1S-XMID
  M-2HYD    IN = H2MIX 2-H2IN     OUT = 2-H2MIX
  M3        IN = 1SO4 1S14 1S24   OUT = 1S-REFSE
  M38       IN = 2S-SH2O 3S-SH2O 4S-SH2O 5S-SH2O 6S-SH2O 9S-SH2O     &
              OUT = 38-FEED
  M4        IN = 1SO5 1S15 1S25   OUT = 1S-WATER
  M-462     IN = 4S-GAS GASES 5S-LPGAS 3S-SGAS 7S-H2     OUT = 62-HYD
  M-561     IN = 5S-HPGAS 2S-GAS  OUT = 61-HYD
  M-6GAS    IN = SOUR-GAS SOUR-2GS H2S-GAS 38AS-VAP      OUT = 6-SGAS
  M-73      IN = GAS-OUT 7S-GAS   OUT = 3-GAS
  M-HYD     IN = H2-RICH H2-2RICH OUT = H2MIX DUMMY
  M-NAP     IN = NAPHTHA2 3S-OIL  OUT = 4-FEED
  M-PNAP    IN = 4S-NAPH 5S-NAPH  OUT = PS-NAPH
  P1-ALT1   IN = 1S11             OUT = 1S12 1S13 1S14 1S15
  P1-ALT2   IN = 1S21             OUT = 1S22 1S23 1S24 1S25
  P1-BASE   IN = 1SO1             OUT = 1SO2 1SO3 1SO4 1SO5
  P14       IN = COALTO14         OUT = COALTO2 14S-XMID 14S-REF 14S-WAT
  PO2       IN = 2-H2MIX COALTO2 SOLVENT ROSE-XTR 2-H2OIN              &
              OUT = 2S-GAS GASES NAPHTHA GAS-OIL 2S-BOTTS 2S-SH2O
  PO3       IN = NAPHTHA 3-GAS                                         &
              OUT = 3S-SGAS 3S-FGAS 3S-PROP 3S-BUT 3S-OIL 3S-SH2O
  PO4       IN = 4-H2IN 4-FEED 4-H2OIN                                 &
              OUT = 4S-GAS 4S-NAPH 4S-SH2O
  PO5       IN = 5-H2IN GAS-OIL 5-H2OIN                                &
              OUT = 5S-HPGAS 5S-LPGAS 5S-NAPH P35O-450 P450-650        &
                    P650-850 5S-SH2O
  P61       IN = 61-HYD           OUT = H2-RICH SOUR-GAS P61-GAS
  P62       IN = 62-HYD P61-GAS                                        &
              OUT = H2-2RICH SOUR-2GS GAS-OUT NAPHTHA2
  PO7       IN = 7-NAPH           OUT = 7S-H2 7S-GAS REFORMED
  P81       IN = 2S-BOTTS         OUT = ROSE-XTR ASH-CONC
  P11       IN = 11-FEED          OUT = 11S-FGAS 11S-LIQS
  P31       IN = 3S-FGAS          OUT = 31S-01
  P314      IN = FBC-FEED         OUT = SA6-01
  P38       IN = 38-FEED          OUT = NH3-PROD 38S-OUT
  P38A      IN = 38S-OUT          OUT = 38AS-VAP 38AS-LIQ
```

```
  P38B      IN = 38AS-LIQ          OUT = WASTE 39FEED
  P39       IN = 39FEED            OUT = PHENOL WASTEH2O
  SA6       IN = SA6-01            OUT = FBC-SOL FBC-GAS
  S1        IN = ROMCOAL           OUT = 1S01 1S11 1S21
  S2        IN = 1S-CCOAL          OUT = COALTO14 9COAL
  S6-SH2O   IN = 6-SGAS            OUT = 6S-SH2O 11-FEED
  S7        IN = PS-NAPH           OUT = 7-NAPH PNAPHTHA
  S8        IN = ASH-CONC          OUT = FBC-FEED S8-ASHC
;
FLOWSHEET HYDROGEN
; Plant M9 is the hydrogen stream mixer.
;   Stream M9H2     is the dummy H2 stream to the liquefaction unit.
;   Stream M9H4     is the dummy H2 stream to the naphtha hydrotreater.
;   Stream M9H5     is the dummy H2 stream to the gas-oil hydrotreater.
;   Stream HHNEED   is the dummy H2 stream from the mixer.
; Plant M9C is the coal stream mixer.
;   Stream COALTO9  is the clean coal stream to the mixer.
;   Stream S8-ASHC  is the ash concentrate stream from the ROSE unit.
;   Stream 9-FEED   is the mixed coal stream to the gasifier.
; Plant P09 is the plant for producing hydrogen by coal gasification.
;   Stream 9-H2OIN  is the water feed stream to the gasifier section.
;   Stream 9-O2IN   is the purified O2 stream from the air sep. plant.
;   Stream 9-STEMIN is the steam that goes to the shift reactors.
;   Stream H2-GAS   is the product hydrogen stream.
;   Stream H2S-GAS  is the product hydrogen sulfide stream.
;   Stream VENT-GAS is the product vent gas stream.
;   Stream 9S-SH2O  is the product sour water stream.
;   Stream SLAG     is the product slag stream.
; Plant P91 is the Steam Reforming of Natural Gas Plant.
;   Stream NAT-GAS  is the inlet natural gas stream.
;   Stream STEAM    is the inlet process water stream.
;   Stream H2-PROD  is the product hydrogen stream.
;   Stream FLUE-GAS is the product flue gas stream.
; Plant P10 is the Air Separation Plant.
;   Stream 10-AIRIN is the air input stream.
;   Stream 10S01    is the product oxygen stream.
;   Stream 10S02    is the product nitrogen stream.
; Plant S9 is the hydrogen stream splitter.
;   Stream H9NEED   is the dummy H2 stream for the gasifier.
;   Stream H91NEED  is the dummy H2 stream for the steam reformer.
;
  M9H       IN = M9H2 M9H4 M9H5    OUT = MHNEED
  M9C       IN = S8-ASHC COALTO9   OUT = 9-FEED
  P09       IN = 9-FEED 9-H2OIN 9-O2IN 9-STEMIN        &
              OUT = H2-GAS H2S-GAS VENT-GAS 9S-SH2O SLAG
  P91       IN = NAT-GAS STEAM     OUT = H2-PROD FLUE-GAS
  P10       IN = 10-AIRIN          OUT = 10S01  10S02
  S9        IN = MHNEED            OUT = H9NEED H91NEED
;
; Design Specifications
; ---------------------
;
;  Design spec to set the hydrogen flow rate to Plant 2 (2-H2MIX)
;  to a specified weight percent (HPCT2) of the MAF coal input stream.
DES-SPEC 2H2FLO
```

```
   DEFINE CHP2   MASS-FLOW  STREAM=2-H2MIX  COMPONENT=H2
   DEFINE CCOAL  MASS-FLOW  STREAM=COALTO2  SUBSTREAM=NC COMPONENT=COAL
   DEFINE CCASH  COMP-ATTR-VAR STREAM=COALTO2  SUBSTREAM=NC &
                   COMPONENT=COAL ATTRIBUTE=ULTANAL ELEMENT=1
C     Set the specified H2 rate to Plant 2 in wt% in the following line.
F     HPCT2 = 7.9205D0
C     DAFCOAL is the dry ash-free coal (MAF coal).
F     DAFCOAL = CCOAL * (100.0D0 - CCASH) * 0.01D0
F     H2P2 = 0.01D0 * HPCT2 * DAFCOAL
   SPEC CHP2 TO H2P2
   TOL-SPEC 0.1
   VARY STREAM-VAR  STREAM=2-H2IN  VARIABLE=MASS-FLOW
   LIMITS 100 1000000
;
;  Design spec to set the correct ROM coal flow to the splitter to
;  obtain the desired 17,102 TPSD of MF coal flow rate to the coal
;  liquefaction plant, Plant 2.
DES-SPEC COALFLO
   DEFINE CTARG  MASS-FLOW  STREAM=COALTO2   SUBSTREAM=NC  COMPONENT=COAL
;  Set TPD to the target coal rate to Plant 2 in TPSD of MF coal.
;  ==============================================================
;
F     TPD = 18641.0D0
F     WTPHR = (TPD * 2000.0D0) / 24.0D0
   SPEC CTARG TO WTPHR
   TOL-SPEC 0.1
   VARY MASS-FLOW  STREAM=ROMCOAL  SUBSTREAM=NC  COMPONENT=COAL
   LIMITS 100 10000000
;
;  Design spec to set the correct 9-FEED flow rate to the Plant 9,
;  coal gasifier, to obtain the desired hydrogen production rate.
DES-SPEC H2FLO
   DEFINE HOUT   MASS-FLOW   STREAM=H2-GAS   COMPONENT=H2
   DEFINE HTOT   MASS-FLOW   STREAM=H9NEED   COMPONENT=H2
   SPEC HOUT TO HTOT
   TOL-SPEC 1.0
   VARY STREAM-VAR STREAM=COALTO9  SUBSTREAM=NC  VAR=MASS-FLOW
   LIMITS 0.1 10000000
;
;  Design spec to set the heat duty to block M-HYD to zero by
;  varying the temperature. This corrects a temperature calculating
;  error in the ASPEN mixer block algorithm.
DES-SPEC HD-HYD
   DEFINE HDTY BLOCK-VAR BLOCK=M-HYD SENTENCE=RETENTION VARIABLE=HEAT-DUTY
   SPEC HDTY TO 0.0
   TOL-SPEC 1000
   VARY BLOCK-VAR BLOCK=M-HYD SENTENCE=PARAM VARIABLE=TEMPERATURE
   LIMITS 10 500
;
;  Design spec to set the 10-AIRIN stream flow to produce the required
;  amount of oxygen product required by Plant 9, coal gasification.
DES-SPEC O2FLO
 DEFINE FLO10S STREAM-VAR STREAM=10S01    VAR=MASS-FLOW
 DEFINE FLOOXY STREAM-VAR STREAM=9-O2IN   VAR=MASS-FLOW
   SPEC FLO10S TO FLOOXY
```

```
   TOL-SPEC 0.1
   VARY STREAM-VAR  STREAM=10-AIRIN  VARIABLE=MASS-FLOW
   LIMITS 0.1 10000000
;
;  Design spec to set the hydrogen flow rate for Plant 9.1.
DES-SPEC RFMRFLO
   DEFINE HOUT2  MASS-FLOW   STREAM=H2-PROD  COMPONENT=H2
   DEFINE HTOT2  MASS-FLOW   STREAM=H91NEED  COMPONENT=H2
   SPEC HOUT2 TO HTOT2
   TOL-SPEC 0.1
   VARY STREAM-VAR  STREAM=NAT-GAS  VARIABLE=MASS-FLOW
   LIMITS 1000 600000
;
; Transfer Blocks
; ---------------
;
;  Transfer block to set COALTO9 equal to the 9COAL stream (the wet
;  clean coal input).  This duplicates the full property set and
;  provides the initial guess flow rate for COALTO9.
TRANSFER CCOAL
   SET STREAM COALTO9
   EQUAL-TO STREAM 9COAL
;
;  Transfer block used to set the hydrogen flow rates of the input
;  streams to the calculated hydrogen flows to Plant 2 (2-H2IN),
;  Plant 4 (4-H2IN), and Plant 5 (5-H2IN).  M9's represent hydrogen
;  flows from Plant 9.0/10 and M91's are for the Plant 9.1 alternative.
TRANSFER HFLOW
   SET STREAM M9H2
   EQUAL-TO STREAM 2-H2IN
   SET STREAM M9H4
   EQUAL-TO STREAM 4-H2IN
   SET STREAM M9H5
   EQUAL-TO STREAM 5-H2IN
;
; Fortran Blocks
; --------------
;
;  Fortran block to set the correct water flow rate in the clean
;  coal going to Plant 9.
FORTRAN 9COAL
   DEFINE W9COAL MASS-FLOW  STREAM=9COAL   COMPONENT=H2O
   DEFINE C9COAL MASS-FLOW  STREAM=9COAL   SUBSTREAM=NC COMPONENT=COAL
   DEFINE WCTO9  MASS-FLOW  STREAM=COALTO9 COMPONENT=H2O
   DEFINE CCTO9  MASS-FLOW  STREAM=COALTO9 SUBSTREAM=NC COMPONENT=COAL
F     WCTO9 = CCTO9 * (W9COAL / C9COAL)
;
;  This Fortran block resets the split fraction in S2 to provide the
;  flow rate of coal to Plant 9.0.
FORTRAN COALFLOW
   DEFINE C14    STREAM-VAR  STREAM=COALTO14  VAR=MASSFLOW
   DEFINE C9     STREAM-VAR  STREAM=COALTO9   VAR=MASSFLOW
   DEFINE RC     STREAM-VAR  STREAM=ROMCOAL   VAR=MASSFLOW
   DEFINE CC     STREAM-VAR  STREAM=1S-CCOAL  VAR=MASSFLOW
   DEFINE SFRAC  BLOCK-VAR   BLOCK=S2  SENTENCE=FRAC  VAR=FRAC  &
```

```
    ID1=COALTO14  ELEMENT=1
C     Calculate total clean coal.
F     TCC = C14 + C9
C     Reset the ROMCOAL feed rate to match the new value.
F     RC = RC * (TCC / CC)
C     Reset the split fraction in S2 to correct 9COAL flow rate.
F     SFRAC = C14 / (C9 + C14)
;
;  This FORTRAN block will calculate the initial ratio of the MIXED
;  substream flow to the NC substream flow in the stream ROMCOAL.
;  It will store this result in RATIO, and use that value to adjust
;  the MIXED substream flow in proportion to the NC substream flow
;  that is varied by the COALFLO design-spec.  This is needed to set
;  the correct amount of water entering with the ROM coal.
FORTRAN MIXFLO
F     COMMON /RATIO/ RMIXNCP
F     COMMON /RGLOB/ RDUM1, RMIN
 DEFINE FLONCP SUBSTREAM-VAR STREAM=ROMCOAL SUBSTREAM=NC VAR=MASSFLOW
 DEFINE FLOMIX SUBSTREAM-VAR STREAM=ROMCOAL SUBSTREAM=MIXED VAR=MASSFLOW
C  The following should only be true on the first pass.  This prevents
C  writing over the initial substream ratio on subsequent passes.
F     IF (RMIXNCP .LT. RMIN) THEN
F        RMIXNCP = FLONCP / FLOMIX
F     END IF
C  Adjust the other substream flow based on changes to the NC
C  substream.
F     FLOMIX = FLONCP / RMIXNCP
;
;  Fortran block to dynamically set the URCOAL fraction in the
;  separation block, SA6, equal to the solids production parameter,
;  REAL(1), in block P314, the fluidized bed combustor.  This block
;  only has significance when Option 6 is in effect.
FORTRAN SA6SET
   DEFINE FRAC1 BLOCK-VAR BLOCK=P314 SENTENCE=REAL VAR=REAL ELEMENT=1
   DEFINE FRAC2 BLOCK-VAR BLOCK=SA6  SENTENCE=FRAC VAR=FRAC ID1=NC    &
    ID2=FBC-SOL ELEMENT=1
F     FRAC2 = FRAC1
;
;  FORTRAN block to set the COMBINED steam and water flow rate to
;  Plant 2 as a specified weight percent of the dry coal feed.
FORTRAN SETUP2
   DEFINE FEED2 MASS-FLOW  STREAM=COALTO2  SUBSTREAM=NC  COMPONENT=COAL
   DEFINE H2O2  STREAM-VAR STREAM=2-H2OIN  VAR=MASSFLOW
F     H2O2 = FEED2 * 321292.0 / 388356.0
;
;  FORTRAN block used to set the hydrogen flow rate to Plant 4 (4-H2IN)
;  to a specified weight percent (HPCT4) of the naphtha feed stream,
;  and the hydrogen flow rate to Plant 5 (5-H2IN) to a specified weight
;  percent (HPCT5) of the gas oil feed stream.  This block also sets
;  the inlet water flow rates for these plants to specified rates
;  as functions of the hydrocarbon feed rates.
FORTRAN SETUP45
   DEFINE CHP4   MASS-FLOW  STREAM=4-H2IN   COMPONENT=H2
   DEFINE CHP5   MASS-FLOW  STREAM=5-H2IN   COMPONENT=H2
   DEFINE FLP4   STREAM-VAR STREAM=4-H2IN   VAR=MASSFLOW
```

```
   DEFINE FLP5   STREAM-VAR STREAM=5-H2IN   VAR=MASSFLOW
   DEFINE XNAPH  STREAM-VAR STREAM=4-FEED   VAR=MASSFLOW
   DEFINE XGOIL  STREAM-VAR STREAM=GAS-OIL  VAR=MASSFLOW
   DEFINE H2O4   STREAM-VAR STREAM=4-H2OIN  VAR=MASSFLOW
   DEFINE H2O5   STREAM-VAR STREAM=5-H2OIN  VAR=MASSFLOW
C     Set the specified H2 rates in the following four lines.
F     WFHTO4 = (236. + 1232.) / 196072.
F     WFHTO5 = (1728. + 14298.) / 761984.
F     FLP4 = WFHTO4 * XNAPH * (FLP4 / CHP4)
F     FLP5 = WFHTO5 * XGOIL * (FLP5 / CHP5)
C     Set the specified H2O rates in the following two lines.
F     H2O4 = XNAPH * 18800. / 196072.
F     H2O5 = XGOIL * 40600. / 761984.
;
;  FORTRAN block to set the steam, water and oxygen stream flow rates
;  to Plant 9 based on the inlet flow rate of hydrocarbons and NC
;  components (on a dry ash-free basis).
FORTRAN SETUP9
 DEFINE FL29MX SUBSTREAM-VAR STREAM=9-FEED  SUBSTREAM=MIXED VAR=MASS-FLOW
 DEFINE ULCOAL COMP-ATTR-VAR STREAM=9-FEED  SUBSTREAM=NC &
        COMPONENT=COAL   ATTRIBUTE=ULTANAL ELEMENT=1
 DEFINE ULURC  COMP-ATTR-VAR STREAM=9-FEED  SUBSTREAM=NC &
        COMPONENT=URCOAL ATTRIBUTE=ULTANAL ELEMENT=1
 DEFINE FL29C   MASS-FLOW  STREAM=9-FEED  SUBSTREAM=NC COMPONENT=COAL
 DEFINE FL29UR  MASS-FLOW  STREAM=9-FEED  SUBSTREAM=NC COMPONENT=URCOAL
 DEFINE FL29W   MASS-FLOW  STREAM=9-FEED  COMPONENT=H2O
 DEFINE FL2STM  STREAM-VAR STREAM=9-STEMIN VAR=MASS-FLOW
 DEFINE FL2H2O  STREAM-VAR STREAM=9-H2OIN  VAR=MASS-FLOW
 DEFINE FL2O2   STREAM-VAR STREAM=9-O2IN   VAR=MASS-FLOW
C  Adjust the steam, water and oxygen stream flow rates based on the
C  inlet flow rate of hydrocarbons and NC components (on a dry basis).
F     X1 = 0.01*FL29C *(100.0-ULCOAL)
F     X2 = 0.01*FL29UR*(100.0-ULURC)
F     FL2STM = 0.25495 * (FL29MX + X1 + X2 - FL29W)
F     FL2H2O = 1.4723 * (FL29MX + X1 + X2 - FL29W)
F     FL2O2  = 1.1365 * (FL29MX + X1 + X2 - FL29W)
;
;  Fortran block to set up the common and OSBL utility consumptions.
FORTRAN SETUP31
F     COMMON /USRC01/ PLNTID(32), UTIL(32,15), CAPCST(32,5), OPCST(32,5)
F     COMMON /USRC04/ MODE
F     CHARACTER * 6  PLNTID
 DEFINE DCOAL2 SUBSTREAM-VAR STREAM=COALTO2 SUBSTREAM=NC VAR=MASS-FLOW
C     COMMON /USRC03/ is used to transfer variables FIN(5,4),
C       FOUT(20,4), PGAS, PPWR, OPTN6
C     See Subroutine USRSR1 for the definition of the items in named
C     common block /USRC03/.
C     COMMON /USRC04/ contains the Plant 2 MODE switch which indicates
C     the Plant 2 calculation option in use.  Generally MODE is the
C     option plus 10.  It is not loaded for all options.
C     Base all the offsite and OSBL utilities consumptions on the dry
C     coal feed rate to Plant 2, the Coal Liquefaction Plant. Ignore
C     cooling and process water consumptions and productions.
F     PLNTID (19) = 'OTHERS'
C     Electric Power.
```

```
F     UTIL(19,1) = 25.1346 * DCOAL2 * 0.001
F     IF ( OPTN6 .GE. 0.99D0 )   UTIL(19,1) = 29.5411 * DCOAL2 * 0.001
C     600 psig steam at 720F.
F     UTIL(19,4) = 0.05122207 * DCOAL2 * 0.001
C     150 psig saturated steam.
F     UTIL(19,6) = 0.04350367 * DCOAL2 * 0.001
C     50 psig saturated steam.
F     UTIL(19,7) = 0.06757103 * DCOAL2 * 0.001
C
F     IF ( MODE .EQ. 18 )  THEN
C       High Space Velocity Option with H2 production by steam
C       reforming of natural gas.
C       Electric Power.
F       UTIL(19,1) = 39797.0 * DCOAL2 / 1553424.
F       IF ( OPTN6 .GE. 0.99D0 )  UTIL(19,1) = 41373.0*DCOAL2/1553424.
C       600 psig steam at 720F.
F       UTIL(19,4) = 73.000 * DCOAL2 / 1553424.
C       150 psig saturated steam.
F       UTIL(19,6) = 66.000 * DCOAL2 / 1553424.
C       50 psig saturated steam.
F       UTIL(19,7) = 96.300 * DCOAL2 / 1553424.
F     ENDIF
;
;  Fortran statement to set the molar flow rate of the STEAM stream to
;  be in balance with the feed stream to Plant 9.1.
FORTRAN SETUP91
   DEFINE GS     STREAM-VAR  STREAM=NAT-GAS  VARIABLE=MOLE-FLOW
   DEFINE ST     STREAM-VAR  STREAM=STEAM    VARIABLE=MOLE-FLOW
F     IF ( GS .GT. 0.0D0 )   THEN
F         ST = 2.504543D0 * GS
F       ELSE
F         ST = 0.0D0
F     ENDIF
;
;  Fortran block to switch between Plant 9.0 & 10 or just Plant 9.1.
;  Plants 9.0 and 10 produce H2 by coal gasification, and Plant 9.1
;  produced H by steam reforming of natural gas.
FORTRAN OPTION6
F     COMMON /USRC03/ FIN(5,4), FOUT(20,4), PGAS, PPWR, OPTN6
C     See Subroutine USRSR1 for the definition of the items in named
C     common block /USRC03/.
 DEFINE FSTM   STREAM-VAR STREAM=STEAM    VAR=MOLE-FLOW
 DEFINE FNG    STREAM-VAR STREAM=NAT-GAS  VAR=MOLE-FLOW
 DEFINE F10A   STREAM-VAR STREAM=10-AIRIN VAR=MASS-FLOW
 DEFINE F9H    STREAM-VAR STREAM=9-H2OIN  VAR=MASS-FLOW
 DEFINE F9S    STREAM-VAR STREAM=9-STEMIN VAR=MASS-FLOW
 DEFINE F9O    STREAM-VAR STREAM=9-O2IN   VAR=MASS-FLOW
 DEFINE FC9M   SUBSTREAM-VAR STREAM=9-FEED  SUBSTREAM=MIXED VAR=MASS-FLOW
 DEFINE FC9NC  SUBSTREAM-VAR STREAM=9-FEED  SUBSTREAM=NC    VAR=MASS-FLOW
 DEFINE FRAC8  BLOCK-VAR   BLOCK=S8  SENTENCE=FRAC  VAR=FRAC  &
  ID1=S8-ASHC  ELEMENT=1
 DEFINE FRAC9  BLOCK-VAR   BLOCK=S9  SENTENCE=FRAC  VAR=FRAC  &
  ID1=H9NEED   ELEMENT=1
 DEFINE FRAC38 BLOCK-VAR   BLOCK=P38B  SENTENCE=FRAC  VAR=FRAC  &
  ID1=WASTE    ELEMENT=1
```

```
C     Set N9 equal to 0 to run Plant 9.0 & 10, or
C     set N9 equal to 1 to run Plant 9.1 (OPTION 6).
F     N9=0
F     IF (N9 .EQ. 0) THEN
F       OPTN6 = 0.0D0
F       FSTM = 1.0D-6
F       FNG = 1.0D-6
F       FRAC8 = 1.0
F       FRAC9 = 1.0
F       FRAC38 = 0.28595
F     ENDIF
F     IF (N9 .EQ. 1) THEN
F       OPTN6 = 1.0D0
F       F10A = 1.0D-6
F       F9H = 1.0D-6
F       F9S = 1.0D-6
F       F9O = 1.0D-6
F       FC9M = 1.0D-6
F       FC9NC = 1.0D-6
F       FRAC8 = 0.0
F       FRAC9 = 0.0
F       FRAC38 = 0.0
F     ENDIF
;
FORTRAN SUMMARY
C     This Fortran block writes the summary report to the DCLSUM.REP
C     file, and also writes the DCL1.PRN file for transfering the
C     results to the Lotus spreadsheet economics model.
C     COMMON /USRC03/ is used to transfer variables FIN(5,4),
C       FOUT(20,4), PGAS, PPWR, OPTN6
C     See Subroutine USRSR1 for the definition of the items in named
C     common block /USRC03/.
 DEFINE FIN1   SUBSTREAM-VAR STREAM=ROMCOAL   SUBSTREAM=NC VAR=MASS-FLOW
 DEFINE FIN2   STREAM-VAR    STREAM=NAT-GAS   VAR=MASS-FLOW
 DEFINE FOUT1  STREAM-VAR    STREAM=3S-PROP   VAR=MASS-FLOW
 DEFINE FOUT2  STREAM-VAR    STREAM=3S-BUT    VAR=MASS-FLOW
 DEFINE FOUT3A STREAM-VAR    STREAM=PNAPHTHA  VAR=MASS-FLOW
 DEFINE FOUT3B STREAM-VAR    STREAM=REFORMED  VAR=MASS-FLOW
 DEFINE FOUT4  STREAM-VAR    STREAM=P350-450  VAR=MASS-FLOW
 DEFINE FOUT5  STREAM-VAR    STREAM=P450-650  VAR=MASS-FLOW
 DEFINE FOUT6  STREAM-VAR    STREAM=P650-850  VAR=MASS-FLOW
 DEFINE FOUT7  SUBSTREAM-VAR STREAM=1S-REFSE  SUBSTREAM=NC VAR=MASS-FLOW
 DEFINE FOUT8  SUBSTREAM-VAR STREAM=SLAG      SUBSTREAM=NC VAR=MASS-FLOW
 DEFINE FOUT8A SUBSTREAM-VAR STREAM=FBC-SOL   SUBSTREAM=NC VAR=MASS-FLOW
 DEFINE FOUT10 STREAM-VAR    STREAM=NH3-PROD  VAR=MASS-FLOW
 DEFINE FOUT11 STREAM-VAR    STREAM=PHENOL    VAR=MASS-FLOW
 DEFINE FOUT12 STREAM-VAR    STREAM=11S-LIQS  VAR=MASS-FLOW
C     Load the stream flow rates in the FIN() and FOUT() arrays in
C     Mlbs/hr.  All solid stream flow rates are on a dry basis.
F     FIN(1,1)  = 0.001D0 * FIN1
F     FIN(2,1)  = 0.001D0 * FIN2
F     FOUT(1,1) = 0.001D0 * FOUT1
F     FOUT(2,1) = 0.001D0 * FOUT2
F     FOUT(3,1) = 0.001D0 * (FOUT3A + FOUT3B)
F     FOUT(4,1) = 0.001D0 * FOUT4
```

```
F     FOUT(5,1) = 0.001D0 * FOUT5
F     FOUT(6,1) = 0.001D0 * FOUT6
F     FOUT(7,1) = 0.001D0 * FOUT7
F     FOUT(8,1) = 0.001D0 * (FOUT8 + FOUT8A)
F     FOUT(10,1) = 0.001D0 * FOUT10
F     FOUT(11,1) = 0.001D0 * FOUT11
F     FOUT(12,1) = 0.001D0 * FOUT12
C
C     Set XOF to the number of extra operators and OSBL operators
C     per dedicated plant operator for the High Space Velocity Case.
C     ------------------------------------------------------------
F     XOF = 96. / 324.
C
C     Set the LOSBL and LPLANT switches, as appropriate, to duplicate
C     the Bechtel OSBL and first vs. Nth plant costing logic.
C     LOSBL  = 0  - Use baseline case OSBL costing logic.
C     LOSBL  = 1  - Use option case OSBL costing logic.
C     LPLANT = 0  - Use first plant OSBL and engineering costing logic.
C     LPLANT = 1  - Use Nth plant OSBL and engineering costing logic.
C     ============================================================
F     LOSBL = 1
F     LPLANT = 1
C
C     Open the separate output file called DCLSUM.REP to contain the
C     summary report of the simulation results.
F     OPEN (UNIT=62, FILE='DCLSUM.REP', STATUS='UNKNOWN',
F    1  ACCESS='SEQUENTIAL', FORM='FORMATTED',
F    2  BUFFERED='BUFFERED')
C     Call Subroutines USRSR1 and USRSR2 to write the summary report.
F     CALL USRSR1 (62)
F     CALL USRSR2 (62, LOSBL, LPLANT, OPTN6, XOF)
F     CLOSE (UNIT=62, STATUS='KEEP')
C     Now write the LOTUS spreadsheet economics model input file.
F     OPEN (UNIT=62, FILE='DCL1.PRN', STATUS='UNKNOWN',
F    1  ACCESS='SEQUENTIAL', FORM='FORMATTED',
F    2  BUFFERED='BUFFERED')
C     Call Subroutines USRSR3 to write the model input file.
F     CALL USRSR3 (62, OPTN6, XOF)
F     CLOSE (UNIT=62, STATUS='KEEP')
;
; Convergence Blocks
; ------------------
;
CONVERGENCE CBLK1 WEGSTEIN
  TEAR H2MIX 1D-5
  PARAM WAIT=3
;
CONVERGENCE CBLK2 WEGSTEIN
  TEAR ROSE-XTR 1D-6
;
CONVERGENCE CBLK3 WEGSTEIN
  TEAR 6S-SH2O 1D-5
;
CONVERGENCE COALF ONE-VAR
  SPEC COALFLO
```

```
;
CONVERGENCE HD-C1 ONE-VAR
  SPEC HD-HYD
;
CONVERGENCE HYDF BROYDEN-SPEC
  SPEC H2FLO
;
CONVERGENCE 2HYDF ONE-VAR
  SPEC 2H2FLO
;
CONVERGENCE OXYF ONE-VAR
  SPEC O2FLO
;
CONVERGENCE RFMRF ONE-VAR
  SPEC RFMRFLO
;
; Calculation Sequence
; --------------------
;
;  Define subsequence for coal cleaning complex.
SEQUENCE CLEAN COALF MIXFLO S1 P1-BASE P1-ALT1 P1-ALT2                &
               M1 S2 P14 (RETURN COALF)                               &
               M4 M3 M2
;
;  Specify entire flowsheet sequence, including subsequence CLEAN.
SEQUENCE BASE  (SEQUENCE CLEAN)  CCOAL                                &
               CBLK1   2HYDF M-2HYD (RETURN 2HYDF)                    &
               CBLK2 SETUP2 PO2 P81 (RETURN CBLK2)                    &
               P61 P62   HD-C1 M-HYD (RETURN HD-C1)                   &
               M-73 PO3 M-NAP SETUP45 PO4 M-462 PO5 M-561             &
               M-PNAP S7 PO7 (RETURN CBLK1)                           &
               HFLOW M9H OPTION6 S9  S8 P314 SA6SET SA6               &
               HYDF 9COAL M9C SETUP9 PO9 (RETURN HYDF)                &
               OXYF P10 (RETURN OXYF)  COALFLOW  (SEQUENCE CLEAN)     &
               RFMRF SETUP91 P91 (RETURN RFMRF)                       &
               CBLK3 M38 P38 P38A P38B P39 M-6GAS S6-SH2O             &
               (RETURN CBLK3)                                         &
               P11 SETUP31 P31 SUMMARY
;
; Unit Operations Blocks
; ----------------------
;
;  Mix the clean coal product streams from the 3 different cases.
BLOCK M1 MIXER
  DESCRIPTION 'PLANT 1 OUTLET CLEAN COAL MIXER'
;
;  Mix the middling coal product streams from the 3 different cases.
BLOCK M2 MIXER
  DESCRIPTION 'PLANT 1 OUTLET MIDDLING COAL MIXER'
;
;  Mix the hydrogen streams going to Plant 2.
BLOCK M-2HYD MIXER
  DESCRIPTION 'MIXER TO GENERATE THE TOTAL HYDROGEN STREAM TO PLANT 2'
  PARAM NPK=1  KPH=1
;
```

```
;  Mix the refuse product streams from the 3 different cases.
BLOCK M3 MIXER
  DESCRIPTION 'PLANT 1 OUTLET REFUSE MIXER'
;
;  Mix the sour water streams from Plants 2, 3, 4, 5, and 9.
BLOCK M38 MIXER
  DESCRIPTION 'SOUR WATER MIXER FOR PLANT 38 FEED'
;
;  Mix the waste water product streams from the 3 different cases.
BLOCK M4 MIXER
  DESCRIPTION 'PLANT 1 OUTLET WASTE WATER MIXER'
;
;  Mix the hydrogen streams from Plants 4 & 2 for Plant 6.2.
BLOCK M-462 MIXER
  DESCRIPTION 'MIXER TO GENERATE THE PLANT 6.2 FEED'
;
;  Mix the hydrogen streams from Plants 5 & 2 for Plant 6.1.
BLOCK M-561 MIXER
  DESCRIPTION 'MIXER TO GENERATE THE PLANT 6.1 FEED'
;
;  Mix the sour gas streams from Plants 6.1, 6.2, 9 and 38 for the
;  Plant 11 feed stream.
BLOCK M-6GAS HEATER
  DESCRIPTION 'MIXER TO GENERATE THE PLANT 11 FEED'
  PARAM  TEMP=110.0  PRES=14.7
;
;  Mix the H2 gas streams from Plants 7 & 6.2 for Plant 3.
BLOCK M-73 MIXER
  DESCRIPTION 'MIXER TO GENERATE THE PLANT 3 FEED'
;
;  Mixer M9C - The hydrogen plant feed mixer; used to mix the coal and
;  ROSE unit ASH-CONC stream that goes to Plant 9.0.
BLOCK M9C MIXER
  DESCRIPTION 'MIXER TO GENERATE THE PLANT 9 FEED'
  BLOCK-OPTIONS HMB-RESULTS=2
;
;  Mixer M9 - The dummy hydrogen mixer; used to mix the three
;  streams that go to Plant 2 (M9H2), Plant 4 (M9H4), and
;  Plant 5 (M9H5) into one single output stream (MHNEED) for the
;  S9 splitter.
BLOCK M9H MIXER
  DESCRIPTION 'MIXER TO GENERATE THE TOTAL AMOUNT OF HYDROGEN NEEDED'
  PARAM NPK=1  KPH=1
;
;  Mix the hydrogen streams from Plants 6.1 and 6.2. Use a flash2 block
;  to correct a temperature calculating error in the ASPEN mixer block
;  algorithm.
BLOCK M-HYD FLASH2
  DESCRIPTION 'MIXER TO GENERATE THE TOTAL HYDROGEN FROM 6.1 AND 6.2'
  PARAM  TEMP=100.  PRES=3290.
;
;  Mix the naphtha streams from Plants 2 and 6.2.
BLOCK M-NAP MIXER
  DESCRIPTION 'MIXER TO GENERATE THE TOTAL PLANT 4 NAPHTHA FEED'
;
```

```
;  Mix the product naphtha streams from Plants 4 and 5.
  DESCRIPTION 'MIXER TO GENERATE THE TOTAL PRODUCT NAPHTHA STREAM'
BLOCK M-PNAP MIXER
;
;  Plant P1-ALT1, Coal Cleaning and Preparation Plant. Use User
;  Fortran Model, USR01, within the PLANTS file. ALTERNATE CASE 1 -
;  COAL CLEANING BY HEAVY MEDIUM SEPARATION.
BLOCK P1-ALT1 USER
   SUBROUTINE MODEL = USR01    REPORT = USR01
   DESCRIPTION 'PLANT 1 - ALTERNATE 1 - COAL CLEANING AND PREPARATION PLANT'
   PARAM  NINT = 5   NREAL = 70
;      The following integer and real parameters are for production of
;   the coal cleaned by both jigs and heavy medium separation.  The coal
;   cleaned only by jigs for gasification is handled by a separate plant
;   that is modeled in BLOCK P1-JIGS.  The operators and cost for this
;   plant includes those associalted with the P1-JIGS portion of the coal
;   cleaning and preparation plant.  All parameters have the same meaning
;   as described below for Plant 1 in BLOCK P1-BASE.
;
    INT  0  1  0  1  1
;         FCP         FCM    FHP          FHM    FNP          FNM
     REAL 0.9120155   0.0    0.9050241    0.0    0.8869236    0.0  &
;         FC1P        FC1M   FSP          FSM    FOP          FOM
         0.7602203   0.0    0.4471884    0.0    0.9905900    0.0  &
;         FAP         FAM
         0.3012854   0.0  &
;         PCWP  PCWM  PCWR  Future Use (3 items)
         9.0   3.0   10.0    0.   0.   0.                    &
;         Power           900/750 F steam   900 satd steam
         0.0 7.400489      0.0 0.0           0.0 0.0        &
;         600/720 F steam   600 satd steam    150 satd steam
         0.0 0.0           0.0 0.0           0.0 0.0        &
;         50 satd steam     Plant fuel        Cooling  H2O
         0.0 0.0           0.0 0.0           0.0 0.0        &
;         Process H2O       Nitrogen
         0.0 0.042246      0.0 0.0         &
;         Future Use (6 items)
         0.0  0.0  0.0  0.0  0.0  0.0      &
;         Opers/day     (Opers/day)/train
         8.0           8.0                 &
;         Ref Flow   Max Flow   Min Flow
         285.035    300.0      150.0       &
;         Plant cost equation constants.
;         A      B       E      F      Spares     Future Use (2 items)
         0.0    25.52   0.5942 1.0    0.0        0.0   0.0    &
;         Future Use (10 items)
         0.0  0.0  0.0  0.0  0.0  0.0  0.0  0.0  0.0  0.0
;
;  Set the temperature and pressure of the outlet streams.  These
;  values will override the default values in subroutine USR01.
   FLASH-SPECS STRM = 1S12    KODE=2   TEMP = 70.0   PRES = 14.7  /
               STRM = 1S13    KODE=2   TEMP = 70.0   PRES = 14.7  /
               STRM = 1S14    KODE=2   TEMP = 70.0   PRES = 14.7  /
               STRM = 1S15    KODE=2   TEMP = 70.0   PRES = 14.7
;
```

```
;  Plant P1-ALT2, Coal Cleaning and Preparation Plant. Use User Fortran
;  Model, USR01, within the PLANTS file. ALTERNATE CASE 2 - COAL CLEANING
;  BY HEAVY MEDIUM SEPARATION FOLLOWED BY SPHERICAL AGGLOMERATION.
BLOCK P1-ALT2 USER
   SUBROUTINE MODEL = USR01    REPORT = USR01
   DESCRIPTION 'PLANT 1 - ALTERNATE 2 - COAL CLEANING AND PREPARATION PLANT'
   PARAM  NINT = 5   NREAL = 70
;     The following integer and real parameters are for production of
;  the coal cleaned by both jigs and heavy medium separation followed
;  by spherical agglomeration.  The coal cleaned only by jigs for
;  gasification is handled by a separate plant that is modeled in
;  BLOCK P1-JIGS.  The operators and cost for this plant includes
;  those associalted with the P1-JIGS portion of the coal cleaning
;  and preparation plant.  All parameters have the same meaning as
;  described below for Plant 1 in BLOCK P1-BASE.
;
    INT  0  1  0  1  2
;        FCP          FCM    FHP          FHM    FNP          FNM
     REAL 0.9435271   0.0    0.9338663    0.0    0.9250562    0.0  &
;        FC1P         FC1M   FSP          FSM    FOP          FOM
         0.7400450    0.0    0.3772778    0.0    0.9867266    0.0  &
;        FAP          FAM
         0.1295931    0.0  &
;        PCWP   PCWM  PCWR  Future Use (3 items)
         14.16  3.0   10.0  0.0   0.0   0.0                  &
;        Power                900/750 F steam   900 satd steam
         0.0 51.68786         0.0 0.0           0.0 0.0       &
;        600/720 F steam      600 satd steam    150 satd steam
         0.0 0.0              0.0 0.0           0.0 0.0       &
;        50 satd steam        Plant fuel        Cooling  H2O
         0.0 0.0              0.0 0.394967      0.0 0.0       &
;        Process H2O          Nitrogen
         0.0 0.103481         0.0 0.0         &
;        Future Use (6 items)
         0.0  0.0  0.0  0.0  0.0  0.0      &
;        Opers/day     (Opers/day)/train
         8.0           8.0                 &
;        Ref Flow   Max Flow   Min Flow
         262.3      300.0      150.0      &
;        Plant cost equation constants.
;        A      B       E      F      Spares     Future Use (2 items)
         0.0    73.78   0.5942 1.0    0.0        0.0   0.0    &
;        Future Use (10 items)
         0.0  0.0  0.0  0.0  0.0  0.0  0.0  0.0  0.0  0.0
;
;  Set the temperature and pressure of the outlet streams.  These
;  values will override the default values in subroutine USR01.
   FLASH-SPECS STRM = 1S22    KODE=2   TEMP = 70.0   PRES = 14.7  /
               STRM = 1S23    KODE=2   TEMP = 70.0   PRES = 14.7  /
               STRM = 1S24    KODE=2   TEMP = 70.0   PRES = 14.7  /
               STRM = 1S25    KODE=2   TEMP = 70.0   PRES = 14.7
;
; Plant 1 - Coal Cleaning, Preparation and Drying Plant, Use User Fortran
;           Model USR01
;           BASE CASE - COAL CLEANING BY JIGS For LIQUEFACTION.
```

```
;          600/720 F steam   600 satd steam    150 satd steam
           0.0 0.0           0.0 0.0           0.0 0.0       &
;          50 satd steam     Plant fuel        Cooling  H2O
           0.0 0.0           0.0 0.3410096     0.0 0.010104  &
;          Process H2O       Nitrogen
           0.0 0.0           0.0 3.16015     &
;          Future Use (6 items)
           0.0  0.0  0.0  0.0  0.0  0.0      &
;          Opers/day     (Opers/day)/train
           7.0           1.0                 &
;          Ref Flow   Max Flow   Min Flow
           142.518    130.0      50.0        &
;          Plant cost equation constants.
;          A      B      E      F      Spares   Future use (2 items)
           0.0    8.75   0.8504 1.0    0.0      0.0   0.0       &
;          Future Use (10 items)
           0.0  0.0  0.0  0.0  0.0  0.0  0.0  0.0  0.0  0.0
;
;  Set the temperature and pressure of the outlet streams.  These
;  values will override the default values in subroutine USR01.
   FLASH-SPECS STRM = COALTO2  KODE=2   TEMP = 70.0   PRES = 14.7  /
               STRM = 14S-XMID KODE=2   TEMP = 70.0   PRES = 14.7  /
               STRM = 14S-REF  KODE=2   TEMP = 70.0   PRES = 14.7  /
               STRM = 14S-WAT  KODE=2   TEMP = 70.0   PRES = 14.7
;
; Plant 2 - The coal liquefaction plant - user Fortran block USR02.
BLOCK P02 USER
   SUBROUTINE MODEL = USR02   REPORT = USR02
   DESCRIPTION 'PLANT 2 - HIGH SPACE VELOCITY COAL LIQUEFACTION PLANT'
   PARAM  NINT = 6   NREAL = 70
;      The following 6 integer parameters are:
;      INT(1) = User block summary report control switch.
;               0 => Write the complete user block summary report.
;               1 => Skip the capital cost portion of the summary
;                    report.
;               2 => Skip the capital cost and utilities portions
;                    of the summary report.
;               3 => Skip writing the entire user block summary report.
;      INT(2) = User block summary report destination control switch.
;               0 => Write the user block summary report to the normal
;                    ASPEN/SP output report file.
;               1 => Write the user block summary report to a separate
;                    user block output report file on logical unit 62
;                    called DCL02.REP.
;      INT(3) = Number of operating duplicate trains, excluding spares.
;               If INT(3) = 0, the minimum number of duplicate
;                 trains will be determined so that the capacity
;                 of each plant does not exceed the maximum train
;                 capacity specified by variable REAL(52).
;               If INT(3) > 0, the number of duplicate trains.
;      INT(4) = History file additional output control switch.
;               0 => Write no additional output to the history file.
;               1 => Write the only the subroutine entry and exit
;                    messages to the history file.
;               2 => Write some additional output to the history file.
```

```
;            3-5 => Write some more additional output to the history
;                   file.  Larger values generate more intermediate
;                   output.
;      INT(5) = Switch to write the major equipment summary list and
;               cost summary report by plant section for the baseline
;               design to the separate block output summary report file
;               called DCL02.REP on logical unit 62.
;               0 => Do not write the major equipment summary list.
;               1 => Write the major equipment summary list to the
;                    separate block output file only when
;                    INT(1) <= 2, INT(2) = 1, and INT(6) = 0.
;               2 => Write the major equipment summary list and the
;                    cost summary report by plant section to the
;                    separate block output file only when
;                    INT(1) <= 2, INT(2) = 1, and INT(6) = 0.
;      INT(6) = Switch to select which coal liquefaction reactor yields
;               are calculated.
;               0 => Baseline design two reactor model.
;               3 => Option 3 - Yields for Thermal/Catalytic two-
;                    reactor model.
;               4 => Option 4 - Two-reactor model with interstaage
;                    vent gas separation.
;               5 => Option 5 - Yields for two-reactor coker model.
;               8 => Improved Baseline (Option 8) - High space velocity
;                    two-reactor model.
   INT  0  1  0  1  2  8
;      The following 70 real parameters are:
;      REAL(1)   = Percent coal conversion based on fresh MAF coal
;                  entering the coal liquefaction reactors.
;      REAL(2)-
;       REAL(20) = Future use.
;      REAL(21)  = Constant factor for the power consumption, kw.
;      REAL(22)  = Power consumption per Mlbs/hr of dry coal feed,
;                  kw/(Mlbs/hr of dry coal).
;      REAL(23)  = Constant factor for the 900 psig / 750 F steam
;                  consumption, Mlbs/hr.
;      REAL(24)  = 900 psig / 750 F steam consumption per Mlbs/hr of
;                  dry coal feed, (Mlbs/hr)/(Mlbs/hr of dry coal).
;      REAL(25)  = Constant factor for the 900 psig saturated steam
;                  consumption, Mlbs/hr.
;      REAL(26)  = 900 psig saturated steam consumption per Mlbs/hr of
;                  dry coal feed, (Mlbs/hr)/(Mlbs/hr of dry coal).
;      REAL(27)  = Constant factor for the 600 psig / 720 F steam
;                  consumption, Mlbs/hr.
;      REAL(28)  = 600 psig / 720 F steam consumption per Mlbs/hr of
;                  dry coal feed, (Mlbs/hr)/(Mlbs/hr of dry coal).
;      REAL(29)  = Constant factor for the 600 psig saturated steam
;                  consumption, Mlbs/hr.
;      REAL(30)  = 600 psig saturated steam consumption per Mlbs/hr of
;                  dry coal feed, (Mlbs/hr)/(Mlbs/hr of dry coal).
;      REAL(31)  = Constant factor for the 150 psig saturated steam
;                  consumption, Mlbs/hr.
;      REAL(32)  = 150 psig saturated steam consumption per Mlbs/hr of
;                  dry coal feed, (Mlbs/hr)/(Mlbs/hr of dry coal).
;      REAL(33)  = Constant factor for the 50 psig saturated steam
```

```
;                 consumption, Mlbs/hr.
;      REAL(34)  = 50 psig saturated steam consumption per Mlbs/hr of
;                  dry coal feed, (Mlbs/hr)/(Mlbs/hr of dry coal).
;      REAL(35)  = Constant factor for the plant fuel consumption,
;                  MM BTU/hr.
;      REAL(36)  = Plant fuel consumption per Mlbs/hr of dry coal feed,
;                  (MM BTU/hr)/(Mlbs/hr of dry coal).
;      REAL(37)  = Constant factor for the cooling water consumption,
;                  Mgal/hr.
;      REAL(38)  = Cooling water consumption per Mlbs/hr of dry coal
;                  feed, (Mlbs/hr)/(Mlbs/hr of dry coal).
;                  produced, (Mgal/hr)/(MM SCF/hr of H2).
;      REAL(39)  = Constant factor for the process water consumption,
;                  Mgal/hr.
;      REAL(40)  = Process water consumption per Mlbs/hr of dry coal
;                  feed, (Mlbs/hr)/(Mlbs/hr of dry coal).
;      REAL(41)  = Constant factor for the nitrogen consumption,
;                  MM SCF/hr of N2
;      REAL(42)  = Nitrogen consumption per Mlbs/hr of dry coal feed,
;                  (MM SCF/hr of N2)/(Mlbs/hr of dry coal).
;      REAL(43) -
;       REAL(48) = Future use.
;      REAL(49)  = Constant factor for the number of operators per
;                  day, operators/day.
;      REAL(50)  = Number of operators per day per train,
;                  (operators/day)/train.
;      REAL(51)  = Reference dry coal feed rate to a single train in
;                  Mlbs/hr for the calculation of the ISBL field cost of
;                  a single train as a function of train capacity.
;      REAL(52)  = Maximum size of a single train as defined by the dry
;                  coal feed rate in Mlbs/hr of dry coal.
;      REAL(53)  = Minimum size of a single train as defined by the dry
;                  coal feed rate in Mlbs/hr of dry coal.
;      REAL(54)  = Constant A in the plant ISBL field cost equation.
;      REAL(55)  = Constant B in the plant ISBL field cost equation.
;      REAL(56)  = Constant E in the plant ISBL field cost equation.
;      REAL(57)  = Constant F in the plant ISBL field cost equation.
;      REAL(58)  = Number of spare trains.
;      REAL(59) -
;       REAL(70) = Future use.
;
;         Percent fresh MAF coal conversion
     REAL 92.0  &
;         Future use (9 items)
          0.0  0.0  0.0  0.0  0.0  0.0  0.0  0.0  0.0  &
;         Future use (10 items)
          0.0  0.0  0.0  0.0  0.0  0.0  0.0  0.0  0.0  0.0    &
;         Power              900/750 F steam    900 satd steam
          0.0 38.084901      0.0 0.0            0.0 0.0        &
;         600/720 F steam    600 satd steam     150 satd steam
          0.0 0.0039062      0.0 -0.104612      0.0 -0.063217  &
;         50 satd steam      Plant fuel         Cooling H2O
          0.0 0.1135311      0.0 0.7267816      0.0 0.3408213  &
;         Process H2O        Nitrogen
          0.0 0.0696076      0.0 0.0000300   &
```

```
;         Future Use (6 items)
          0.0  0.0  0.0 0.0  0.0  0.0       &
;         Opers/day     (Opers/day)/train
          0.0           8.0                 &
;         Ref Flow   Max Flow   Min Flow
          388.356    390.000    30.0        &
;         Plant cost equation constants.
;         A      B       E      F      Spares   Future use (2 items)
          0.0    213.7   0.7142 1.0    0.0      0.0   0.0   &
;         Future use (10 items)
          0.0  0.0  0.0  0.0  0.0  0.0  0.0  0.0  0.0  0.0
;  Set the temperature and pressure of the outlet streams.  These
;  values will override the default values in subroutine USR02.
   FLASH-SPECS STRM=2S-GAS KODE=2 TEMP=130.0 PRES=2985.0 NPK=1 KPH=1 /
               STRM = GASES     KODE=2   TEMP = 130.0  PRES = 65.0   /
               STRM = NAPHTHA   KODE=2   TEMP = 140.0  PRES = 16.0   /
               STRM = GAS-OIL   KODE=2   TEMP = 110.0  PRES = 30.0   /
               STRM = 2S-BOTTS  KODE=2   TEMP = 688.0  PRES = 28.0   /
               STRM = 2S-SH2O   KODE=2   TEMP = 100.0  PRES = 30.0
;
; Plant 3 - The gas plant - use user Fortran block USR03.
BLOCK P03 USER
;  NOTE: Number of operators adjusted for high space velocity case.
   SUBROUTINE MODEL = USR03   REPORT = USR03
   DESCRIPTION 'PLANT 3 - THE GAS PLANT (HIGH SPACE VELOCITY CASE)'
   PARAM  NINT = 4   NREAL = 70
;      The following 4 integer parameters are:
;      INT(1) = User block summary report control switch.
;               0 => Write the complete user block summary report.
;               1 => Skip the capital cost portion of the summary
;                    report.
;               2 => Skip the capital cost and utilities portions
;                    of the summary report.
;               3 => Skip writing the entire user block summary report.
;      INT(2) = User block summary report destination control switch.
;               0 => Write the user block summary report to the mormal
;                     ASPEN/SP output report file.
;               1 => Write the user block summary report to a separate
;                    user block output report file on logical unit 62
;                    called DCL03.REP.
;      INT(3) = Number of operating duplicate trains, excluding spares.
;               If INT(3) = 0, the minimum number of duplicate
;                 trains will be determined so that the capacity
;                 of each train does not exceed the maximum train
;                 capacity specified by variable REAL(52).
;               If INT(3) > 0, the number of duplicate trains.
;      INT(4) = History file additional output control switch.
;               0 => Write no additional output to the history file.
;               1 => Write the only the subroutine entry and exit
;                    messages to the history file.
;               2 => Write some additional output to the history file.
;             3-5 => Write some more additional output to the history
;                    file.  Larger values generate more intermediate
;                    output.
   INT  0  1  0  1
```

```
;       The following 70 real parameters are:
;       REAL(1) -
;        REAL(20) = Future use.
;       REAL(21)  = Constant factor for the power consumption, kw.
;       REAL(22)  = Power consumption per MM SCF/hr of dry C4- gas,
;                   kw/(MM SCF/hr of dry C4- gas)
;       REAL(23)  = Constant factor for the 900 psig / 750 F steam
;                   consumption, Mlbs/hr.
;       REAL(24)  = 900 psig / 750 F steam consumption per MM SCF/hr
;                   of dry C4- gas, (Mlbs/hr)/(MM SCF/hr of dry C4- gas).
;       REAL(25)  = Constant factor for the 900 psig saturated steam
;                   consumption, Mlbs/hr.
;       REAL(26)  = 900 psig saturated steam consumption per MM SCF/hr
;                   of dry C4- gas, (Mlbs/hr)/(MM SCF/hr of dry C4- gas).
;       REAL(27)  = Constant factor for the 600 psig / 720 F steam
;                   consumption, Mlbs/hr.
;       REAL(28)  = 600 psig / 720 F steam consumption per MM SCF/hr
;                   of dry C4- gas, (Mlbs/hr)/(MM SCF/hr of dry C4- gas).
;       REAL(29)  = Constant factor for the 600 psig saturated steam
;                   consumption, Mlbs/hr.
;       REAL(30)  = 600 psig saturated steam consumption per MM SCF/hr
;                   of dry C4- gas, (Mlbs/hr)/(MM SCF/hr of dry C4- gas).
;       REAL(31)  = Constant factor for the 150 psig saturated steam
;                   consumption, Mlbs/hr.
;       REAL(32)  = 150 psig saturated steam consumption per MM SCF/hr
;                   of dry C4- gas, (Mlbs/hr)/(MM SCF/hr of dry C4- gas).
;       REAL(33)  = Constant factor for the 50 psig saturated steam
;                   consumption, Mlbs/hr.
;       REAL(34)  = 50 psig saturated steam consumption per MM SCF/hr
;                   of dry C4- gas, (Mlbs/hr)/(MM SCF/hr of dry C4- gas).
;       REAL(35)  = Constant factor for the plant fuel consumption,
;                   MM BTU/hr.
;       REAL(36)  = Plant fuel consumption per MM SCF/hr of dry C4- gas,
;                   (MM BTU/hr)/(MM SCF/hr of dry C4- gas).
;       REAL(37)  = Constant factor for the cooling water consumption,
;                   Mgal/hr.
;       REAL(38)  = Cooling water consumption per MM SCF/hr of dry C4-
;                   gas, (Mgal/hr)/(MM SCF/hr of dry C4- gas).
;       REAL(39)  = Constant factor for the process water consumption,
;                   Mgal/hr.
;       REAL(40)  = Process water consumption per MM SCF/hr of dry C4-
;                   gas, (Mgal/hr)/(MM SCF/hr of dry C4- gas).
;       REAL(41)  = Constant factor for the nitrogen consumption,
;                   MM SCF/hr of N2.
;       REAL(42)  = Nitrogen consumption per MM SCF/hr of dry C4- gas,
;                   (MM SCF/hr of N2)/(MM SCF/hr of dry C4- gas).
;       REAL(43) -
;        REAL(48) = Future use.
;       REAL(49)  = Constant factor for the number of operators per
;                   day, operators/day.
;       REAL(50)  = Number of operators per day per train,
;                   (operators/day)/train.
;       REAL(51)  = Reference gas feed rate to a single train in
;                   MM SCF/hr of dry C4- gas for the calculation of
;                   the ISBL field cost of a single train as a function
```

```
;                    of train capacity.
;       REAL(52)  = Maximum size of a single train as defined by the
;                    gas feed rate in MM SCF/hr of dry C4- gas.
;       REAL(53)  = Minimum size of a single train as defined by the
;                    gas feed rate in MM SCF/hr of dry C4- gas.
;       REAL(54)  = Constant A in the plant ISBL field cost equation.
;       REAL(55)  = Constant B in the plant ISBL field cost equation.
;       REAL(56)  = Constant E in the plant ISBL field cost equation.
;       REAL(57)  = Constant F in the plant ISBL field cost equation.
;       REAL(58)  = Number of spare trains.
;       REAL(59) -
;        REAL(70) = Future use.
;          Future use (10 items)
     REAL 0.0  0.0  0.0  0.0  0.0  0.0  0.0  0.0  0.0  0.0  &
;          Future use (10 items)
          0.0  0.0  0.0  0.0  0.0  0.0  0.0  0.0  0.0  0.0  &
;          Power              900/750 F steam   900 satd steam
          0.0 266.17         0.0 0.0           0.0 0.0       &
;          600/720 F steam    600 satd steam    150 satd steam
          0.0 0.0            0.0 148.18        0.0 0.0       &
;          50 satd steam      Plant fuel        Cooling  H20
          0.0 8.0042         0.0 -807.0        0.0 311.26    &
;          Process H20        Nitrogen
          0.0 0.0            0.0 0.0         &
;          Future Use (6 items)
          0.0  0.0  0.0  0.0  0.0  0.0       &
;          Opers/day      (Opers/day)/train
          0.0             4.0               &
;          Ref Flow   Max Flow   Min Flow
          1.884      5.0        0.300      &
;          Plant cost equation constants.
;          A      B          E      F      Spares   Future Use (3 items)
          0.0    23.6       0.8013 1.0    0.0      0.0   0.0   &
;          Future Use (10 items)
          0.0  0.0  0.0  0.0  0.0  0.0  0.0  0.0  0.0  0.0
;
;  Set the temperature and pressure of the outlet streams.  These
;  values will override the default values in subroutine USR03.
   FLASH-SPECS STRM = 3S-SGAS   KODE=2  TEMP = 137.0  PRES = 55.0   /
               STRM = 3S-FGAS   KODE=2  TEMP = 100.0  PRES = 215.0  /
               STRM = 3S-PROP   KODE=2  TEMP = 100.0  PRES = 280.0  /
               STRM = 3S-BUT    KODE=2  TEMP = 100.0  PRES = 280.0  /
               STRM = 3S-OIL    KODE=2  TEMP = 130.0  PRES = 263.0  &
                      NPK=1 KPH=2 /
               STRM = 3S-SH2O   KODE=2  TEMP = 137.0  PRES = 55.0
;
; Plant 4 - The naphtha hydrotreater - use user Fortran block USR04.
BLOCK P04 USER
;  NOTE: Number of operators adjusted for high space velocity case.
   SUBROUTINE MODEL = USR04   REPORT = USR04
   DESCRIPTION 'PLT 4 - NAPHTHA HYDROTREATER (HIGH SPACE VELOCITY CASE)'
   PARAM  NINT = 4   NREAL = 70
;      The following 4 integer parameters are:
;      INT(1) = User block summary report control switch.
;               0 => Write the complete user block summary report.
```

```
;                1 => Skip the capital cost portion of the summary
;                     report.
;                2 => Skip the capital cost and utilities portions
;                     of the summary report.
;                3 => Skip writing the entire user block summary report.
;      INT(2) = User block summary report destination control switch.
;                0 => Write the user block summary report to the mormal
;                      ASPEN/SP output report file.
;                1 => Write the user block summary report to a separate
;                     user block output report file on logical unit 62
;                     called DCL04.REP.
;      INT(3) = Number of operating duplicate trains, excluding spares.
;                If INT(3) = 0, the minimum number of duplicate
;                  trains will be determined so that the capacity
;                  of each plant does not exceed the maximum train
;                  capacity specified by variable REAL(52).
;                If INT(3) > 0, the number of duplicate trains.
;      INT(4) = History file additional output control switch.
;                0 => Write no additional output to the history file.
;                1 => Write the only the subroutine entry and exit
;                     messages to the history file.
;                2 => Write some additional output to the history file.
;              3-5 => Write some more additional output to the history
;                     file.  Larger values generate more intermediate
;                     output.
    INT  0  1  0  1
;      The following 70 real parameters are:
;      REAL(1)    = Percent desulfurization of the C5+ feed; i. e.,
;                   Percent of sulfur removed from the entering C5+ feed.
;      REAL(2)    = Percent denitrogenation of the C5+ feed; i. e.,
;                   Percent of nitrogen removed from the entering C5+ feed.
;      REAL(3)    = Percent deoxygenation of the C5+ feed.
;                   Percent of oxygen removed from the entering C5+ feed.
;      REAL(4)    = Chemical hydrogen consumption in SCF/bbl of C5+ feed.
;      REAL(5) -
;       REAL(20) = Future use.
;      REAL(21)   = Constant factor for the power consumption, kw.
;      REAL(22)   = Power consumption per Mlbs/hr of C5+ feed,
;                   kw/(Mlbs/hr of C5+ feed).
;      REAL(23)   = Constant factor for the 900 psig / 750 F steam
;                   consumption, Mlbs/hr.
;      REAL(24)   = 900 psig / 750 F steam consumption per Mlbs/hr of
;                   C5+ feed, (Mlbs/hr)/(Mlbs/hr of C5+ feed).
;      REAL(25)   = Constant factor for the 900 psig saturated steam
;                   consumption, Mlbs/hr.
;      REAL(26)   = 900 psig saturated steam consumption per Mlbs/hr of
;                   C5+ feed, (Mlbs/hr)/(Mlbs/hr of C5+ feed).
;      REAL(27)   = Constant factor for the 600 psig / 720 F steam
;                   consumption, Mlbs/hr.
;      REAL(28)   = 600 psig / 720 F steam consumption per Mlbs/hr of
;                   C5+ feed, (Mlbs/hr)/(Mlbs/hr of C5+ feed).
;      REAL(29)   = Constant factor for the 600 psig saturated steam
;                   consumption, Mlbs/hr.
;      REAL(30)   = 600 psig saturated steam consumption per Mlbs/hr of
;                   C5+ feed, (Mlbs/hr)/(Mlbs/hr of C5+ feed).
```

```
;       REAL(31)  = Constant factor for the 150 psig saturated steam
;                   consumption, Mlbs/hr.
;       REAL(32)  = 150 psig saturated steam consumption per Mlbs/hr of
;                   C5+ feed, (Mlbs/hr)/(Mlbs/hr of C5+ feed).
;       REAL(33)  = Constant factor for the 50 psig saturated steam
;                   consumption, Mlbs/hr.
;       REAL(34)  = 50 psig saturated steam consumption per Mlbs/hr of
;                   C5+ feed, (Mlbs/hr)/(Mlbs/hr of C5+ feed).
;       REAL(35)  = Constant factor for the plant fuel consumption,
;                   MM BTU/hr.
;       REAL(36)  = Plant fuel consumption per Mlbs/hr of C5+ feed,
;                   (MM BTU/hr)/(Mlbs/hr of C5+ feed).
;       REAL(37)  = Constant factor for the cooling water consumption,
;                   Mgal/hr.
;       REAL(38)  = Cooling water consumption per Mlbs/hr of C5+ feed,
;                   (Mgal/hr)/(Mlbs/hr of C5+ feed).
;       REAL(39)  = Constant factor for the process water consumption,
;                   Mgal/hr.
;       REAL(40)  = Process water consumption per Mlbs/hr of C5+ feed,
;                   (Mgal/hr)/(Mlbs/hr of C5+ feed).
;       REAL(41)  = Constant factor for the nitrogen consumption,
;                   MM SCF/hr of N2.
;       REAL(42)  = Nitrogen consumption per Mlbs/hr of C5+ feed,
;                   (MM SCF/hr of N2)/(Mlbs/hr of C5+ feed).
;       REAL(43) -
;        REAL(48) = Future use.
;       REAL(49)  = Constant factor for the number of operators per
;                   day, operators/day.
;       REAL(50)  = Number of operators per day per train,
;                   (operators/day)/train.
;       REAL(51)  = Reference C5+ feed rate to a single train in Mlbs/hr
;                   for the calculation of the ISBL field cost of a
;                   single train as a function of train capacity.
;       REAL(52)  = Maximum size of a single train as defined by the
;                   C5+ feed rate in Mlbs/hr.
;       REAL(53)  = Minimum size of a single train as defined by the
;                   C5+ feed rate in Mlbs/hr.
;       REAL(54)  = Constant A in the plant ISBL field cost equation.
;       REAL(55)  = Constant B in the plant ISBL field cost equation.
;       REAL(56)  = Constant E in the plant ISBL field cost equation.
;       REAL(57)  = Constant F in the plant ISBL field cost equation.
;       REAL(58)  = Number of spare trains.
;       REAL(59) -
;        REAL(70) = Future use.
;
;          % Desulfurization   % Denitrogenation
     REAL 99.99                99.988       &
;          % Deoxygenation   Chemical H2 consumption in SCF/bbl C5+ feed
           99.5              125.0          &
;          Future use (6 items)
           0.0  0.0  0.0  0.0  0.0  0.0     &
;          Future use (10 items)
           0.0  0.0  0.0  0.0  0.0  0.0  0.0  0.0  0.0  0.0  &
;          Power             900/750 F steam   900 satd steam
           0.0 6.121396      0.0 0.0           0.0 0.0       &
```

```
;         600/720 F steam   600 satd steam    150 satd steam
          0.0 0.0           0.0 0.461843      0.0 0.0       &
;         50 satd steam     Plant fuel        Cooling  H2O
          0.0 0.0           0.0 0.362787      0.0 2.170592  &
;         Process H2O       Nitrogen
          0.0 0.011650      0.0 0.0         &
;         Future Use (6 items)
          0.0  0.0  0.0  0.0  0.0  0.0      &
;         Opers/day     (Opers/day)/train
          0.0            4.0                &
;         Ref Flow   Max Flow   Min Flow
          196.562    400.0      50.0        &
;         Plant cost equation constants.
;         A      B       E      F      Spares   Future Use (3 items)
          0.0    13.6    0.7843 1.0    0.0      0.0   0.0   &
;         Future Use (10 items)
          0.0  0.0  0.0  0.0  0.0  0.0  0.0  0.0  0.0  0.0
;
;  Set the temperature and pressure of the outlet streams.  These
;  values will override the default values in subroutine USR04.
   FLASH-SPECS STRM = 4S-GAS   KODE=2  TEMP = 135.0  PRES = 915.0  /
               STRM = 4S-NAPH  KODE=2  TEMP = 100.0  PRES = 153.0  /
               STRM = 4S-SH20  KODE=2  TEMP =  70.0  PRES = 14.7
;
; Plant 5 - The gas-oil hydrotreater - use user Fortran block USR05.
BLOCK P05 USER
   SUBROUTINE MODEL = USR05   REPORT = USR05
   DESCRIPTION 'PLT 5 - GAS-OIL HYDROTREATER (HIGH SPACE VELOCITY CASE)'
   PARAM  NINT = 4   NREAL = 70
;      The following 4 integer parameters are:
;      INT(1) = User block summary report control switch.
;               0 => Write the complete user block summary report.
;               1 => Skip the capital cost portion of the summary
;                    report.
;               2 => Skip the capital cost and utilities portions
;                    of the summary report.
;               3 => Skip writing the entire user block summary report.
;      INT(2) = User block summary report destination control switch.
;               0 => Write the user block summary report to the mormal
;                     ASPEN/SP output report file.
;               1 => Write the user block summary report to a separate
;                    user block output report file on logical unit 62
;                    called DCL05.REP.
;      INT(3) = Number of operating duplicate trains, excluding spares.
;               If INT(3) = 0, the minimum number of duplicate
;                 trains will be determined so that the capacity
;                 of each train does not exceed the maximum train
;                 capacity specified by variable REAL(52).
;               If INT(3) > 0, the number of duplicate trains.
;      INT(4) = History file additional output control switch.
;               0 => Write no additional output to the history file.
;               1 => Write the only the subroutine entry and exit
;                    messages to the history file.
;               2 => Write some additional output to the history file.
;             3-5 => Write some more additional output to the history
```

```
;                    file.  Larger values generate more intermediate
;                    output.
   INT  0  1  0  1
;     The following 70 real parameters are:
;     REAL(1)    = Percent desulfurization of the C6+ feed; i. e.,
;                  Percent of sulfur removed from the entering C6+ feed.
;     REAL(2)    = Percent denitrogenation of the C6+ feed; i. e.,
;                  Percent of nitrogen removed from the entering C6+ feed.
;     REAL(3)    = Percent deoxygenation of the C6+ feed.
;                  Percent of oxygen removed from the entering C6+ feed.
;     REAL(4)    = Chemical hydrogen consumption in SCF/bbl of C6+ feed.
;     REAL(5) -
;      REAL(20)  = Future use.
;     REAL(21)   = Constant factor for the power consumption, kw.
;     REAL(22)   = Power consumption per Mlbs/hr of C6+ feed,
;                  kw/(Mlbs/hr).
;     REAL(23)   = Constant factor for the 900 psig / 750 F steam
;                  consumption, Mlbs/hr.
;     REAL(24)   = 900 psig / 750 F steam consumption per Mlbs/hr of
;                  C6+ feed, (Mlbs/hr)/(Mlbs/hr).
;     REAL(25)   = Constant factor for the 900 psig saturated steam
;                  consumption, Mlbs/hr.
;     REAL(26)   = 900 psig saturated steam consumption per Mlbs/hr of
;                  C6+ feed, (Mlbs/hr)/(Mlbs/hr).
;     REAL(27)   = Constant factor for the 600 psig / 720 F steam
;                  consumption, Mlbs/hr.
;     REAL(28)   = 600 psig / 720 F steam consumption per Mlbs/hr of
;                  C6+ feed, (Mlbs/hr)/(Mlbs/hr).
;     REAL(29)   = Constant factor for the 600 psig saturated steam
;                  consumption, Mlbs/hr.
;     REAL(30)   = 600 psig saturated steam consumption per Mlbs/hr of
;                  C6+ feed, (Mlbs/hr)/(Mlbs/hr).
;     REAL(31)   = Constant factor for the 150 psig saturated steam
;                  consumption, Mlbs/hr.
;     REAL(32)   = 150 psig saturated steam consumption per Mlbs/hr of
;                  C6+ feed, (Mlbs/hr)/(Mlbs/hr).
;     REAL(33)   = Constant factor for the 50 psig saturated steam
;                  consumption, Mlbs/hr.
;     REAL(34)   = 50 psig saturated steam consumption per Mlbs/hr of
;                  C6+ feed, (Mlbs/hr)/(Mlbs/hr).
;     REAL(35)   = Constant factor for the plant fuel consumption,
;                  MM BTU/hr.
;     REAL(36)   = Plant fuel consumption per Mlbs/hr of C6+ feed,
;                  (MM BTU/hr)/(Mlbs/hr).
;     REAL(37)   = Constant factor for the cooling water consumption,
;                  Mgal/hr.
;     REAL(38)   = Cooling water consumption per Mlbs/hr of C6+ feed,
;                  (Mgal/hr)/(Mlbs/hr).
;     REAL(39)   = Constant factor for the process water consumption,
;                  Mgal/hr.
;     REAL(40)   = Process water consumption per Mlbs/hr of C6+ feed,
;                  (Mgal/hr)/(Mlbs/hr).
;     REAL(41)   = Constant factor for the nitrogen consumption,
;                  MM SCF/hr of N2.
;     REAL(42)   = Nitrogen consumption per Mlbs/hr of C6+ feed,
```

```
;                    (MM SCF/hr of N2)/(Mlbs/hr).
;       REAL(43) -
;        REAL(48) = Future use.
;       REAL(49)  = Constant factor for the number of operators per
;                   day, operators/day.
;       REAL(50)  = Number of operators per day per train,
;                   (operators/day)/train.
;       REAL(51)  = Reference C6+ feed rate to a single train in Mlbs/hr
;                   for the calculation of the ISBL field cost of a
;                   single train as a function of train capacity.
;       REAL(52)  = Maximum size of a single train as defined by the
;                   C6+ feed rate in Mlbs/hr.
;       REAL(53)  = Minimum size of a single train as defined by the
;                   C6+ feed rate in Mlbs/hr.
;       REAL(54)  = Constant A in the plant ISBL field cost equation.
;       REAL(55)  = Constant B in the plant ISBL field cost equation.
;       REAL(56)  = Constant E in the plant ISBL field cost equation.
;       REAL(57)  = Constant F in the plant ISBL field cost equation.
;       REAL(58)  = Number of spare trains.
;       REAL(59) -
;        REAL(70) = Future use.
;
;          % Desulfurization   % Denitrogenation
     REAL 90.8                 85.15      &
;          % Deoxygenation   Chemical H2 consumption in SCF/bbl C6+ feed
           97.0              1093.6       &
;          Future use (6 items)
           0.0  0.0  0.0  0.0  0.0  0.0   &
;          Future use (10 items)
           0.0  0.0  0.0  0.0  0.0  0.0  0.0  0.0  0.0  0.0  &
;          Power             900/750 F steam   900 satd steam
           0.0 2.818932      0.0 0.0           0.0 0.0       &
;          600/720 F steam   600 satd steam    150 satd steam
           0.0 0.0           0.0 0.0814431     0.0 -0.137307 &
;          50 satd steam     Plant fuel        Cooling  H2O
           0.0 0.0           0.0 0.439843      0.0 0.0259967 &
;          Process H2O       Nitrogen
           0.0 0.00640085    0.0 0.0         &
;          Future Use (6 items)
           0.0  0.0  0.0  0.0  0.0  0.0      &
;          Opers/day     (Opers/day)/train
           0.0            4.0               &
;          Ref Flow   Max Flow   Min Flow
           762.102    800.0      150.0      &
;          Plant cost equation constants.
;          A      B       E      F      Spares   Future Use (2 items)
           0.0    82.9    0.7467 1.0    0.0      0.0   0.0   &
;          Future Use (10 items)
           0.0  0.0  0.0  0.0  0.0  0.0  0.0  0.0  0.0  0.0
;
;  Set the temperature and pressure of the outlet streams.  These
;  values will override the default values in subroutine USR05.
;  The 5S-LPGAS and 5S-NAPH temperature and pressure are those leaving
;  Plant 4 where this fractionation is actually performed.
   FLASH-SPECS STRM = 5S-HPGAS  KODE=2  TEMP = 135.0  PRES = 2690.0 /
```

```
                STRM = 5S-LPGAS  KODE=2  TEMP = 135.0  PRES = 915.0  /
                STRM = 5S-NAPH   KODE=2  TEMP = 100.0  PRES = 153.0  /
                STRM = P350-450  KODE=2  TEMP = 110.0  PRES = 80.0   /
                STRM = P450-650  KODE=2  TEMP = 135.0  PRES = 20.0   /
                STRM = P650-850  KODE=2  TEMP = 135.0  PRES = 20.0   /
                STRM = 5S-SH20   KODE=2  TEMP = 135.0  PRES = 20.0
;
; Plant 6.1 - The Hydrogen purification by Membrane Separation Plant.
BLOCK P61 USER
   SUBROUTINE MODEL = USR61   REPORT = USR61
   DESCRIPTION 'P6.1 - MEMBRANE H2 PURIFICATION PLT (HIGH SPACE VELOCITY)'
   PARAM  NINT = 4   NREAL = 70
;      The following 4 integer parameters are:
;      INT(1) = User block summary report control switch.
;               0 => Write the complete user block summary report.
;               1 => Skip the capital cost portion of the summary
;                    report.
;               2 => Skip the capital cost and utilities portions
;                    of the summary report.
;               3 => Skip writing the entire user block summary report.
;      INT(2) = User block summary report destination control switch.
;               0 => Write the user block summary report to the normal
;                    ASPEN/SP output report file.
;               1 => Write the user block summary report to a separate
;                    user block output report file on logical unit 62
;                    called DCL61.REP.
;      INT(3) = Number of operating duplicate trains, excluding spares.
;               If INT(3) = 0, the minimum number of duplicate
;                 trains will be determined so that the capacity
;                 of each train does not exceed the maximum train
;                 capacity specified by variable REAL(52).
;               If INT(3) > 0, the number of duplicate trains.
;      INT(4) = History file additional output control switch.
;               0 => Write no additional output to the history file.
;               1 => Write the only the subroutine entry and exit
;                    messages to the history file.
;               2 => Write some additional output to the history file.
;             3-5 => Write some more additional output to the history
;                    file.  Larger values generate more intermediate
;                    output.
    INT  0  1  0  1
;      The following 70 real parameters are:
;      REAL(1)   = Percent hydrogen recovery to the hydrogen-rich
;                  product gas stream from the inlet gas stream.
;      REAL(2)   = Concentration of hydrogen in the hydrogen-rich
;                  product gas stream, mole % or vol%.
;      REAL(3)-
;       REAL(20) = Future use.
;      REAL(21)  = Constant factor for the power consumption, kw.
;      REAL(22)  = Power consumption per MM SCF/hr of H2 recovered,
;                  kw/(MM SCF/hr of H2 recovered).
;      REAL(23)  = Constant factor for the 900 psig / 750 F steam
;                  consumption, Mlbs/hr.
;      REAL(24)  = 900 psig / 750 F steam consumption per MM SCF/hr of
;                  H2 recovered, (Mlbs/hr)/(MM SCF/hr of H2 recovered).
```

```
;       REAL(25)  = Constant factor for the 900 psig saturated steam
;                   consumption, Mlbs/hr.
;       REAL(26)  = 900 psig saturated steam consumption per MM SCF/hr
;                   of H2 recovered, (Mlbs/hr)/(MM SCF/hr of H2 recovered).
;       REAL(27)  = Constant factor for the 600 psig / 720 F steam
;                   consumption, Mlbs/hr.
;       REAL(28)  = 600 psig / 720 F steam consumption per MM SCF/hr of
;                   H2 recovered, (Mlbs/hr)/(MM SCF/hr of H2 recovered).
;       REAL(29)  = Constant factor for the 600 psig saturated steam
;                   consumption, Mlbs/hr.
;       REAL(30)  = 600 psig saturated steam consumption per MM SCF/hr of
;                   H2 recovered, (Mlbs/hr)/(MM SCF/hr of H2 recovered).
;       REAL(31)  = Constant factor for the 150 psig saturated steam
;                   consumption, Mlbs/hr.
;       REAL(32)  = 150 psig saturated steam consumption per MM SCF/hr of
;                   H2 recovered, (Mlbs/hr)/(MM SCF/hr of H2 recovered).
;       REAL(33)  = Constant factor for the 50 psig saturated steam
;                   consumption, Mlbs/hr.
;       REAL(34)  = 50 psig saturated steam consumption per MM SCF/hr of
;                   H2 recovered, (Mlbs/hr)/(MM SCF/hr of H2 recovered).
;       REAL(35)  = Constant factor for the plant fuel consumption,
;                   MM BTU/hr.
;       REAL(36)  = Plant fuel consumption per MM SCF/hr of H2 recovered,
;                   (Mlbs/hr)/(MM SCF/hr of H2 recovered).
;       REAL(37)  = Constant factor for the cooling water consumption,
;                   Mgal/hr.
;       REAL(38)  = Cooling water consumption per MM SCF/hr of H2
;                   recovered, (Mlbs/hr)/(MM SCF/hr of H2 recovered).
;       REAL(39)  = Constant factor for the process water consumption,
;                   Mgal/hr.
;       REAL(40)  = Process water consumption per MM SCF/hr of H2
;                   recovered, (Mlbs/hr)/(MM SCF/hr of H2 recovered).
;       REAL(41)  = Constant factor for the nitrogen consumption,
;                   MM SCF/hr of N2
;       REAL(42)  = Nitrogen consumption per MM SCF/hr of H2 recovered,
;                   (MM SCF/hr of N2)/(MM SCF/hr of H2 recovered).
;       REAL(43) -
;        REAL(48) = Future use.
;       REAL(49)  = Constant factor for the number of operators per
;                   day, operators/day.
;       REAL(50)  = Number of operators per day per train,
;                   (operators/day)/train.
;       REAL(51)  = Reference hydrogen recovery rate for a single train
;                   in MM SCF/hr of H2 for the calculation of the
;                   ISBL field cost of a single train as a function of
;                   capacity.
;       REAL(52)  = Maximum size of a single train as defined by the
;                   hydrogen recovery rate in MM SCF/hr of H2
;                   recovered.
;       REAL(53)  = Minimum size of a single train as defined by the
;                   hydrogen recovery rate in MM SCF/hr of H2
;                   recovered.
;       REAL(54)  = Constant A in the plant ISBL field cost equation.
;       REAL(55)  = Constant B in the plant ISBL field cost equation.
;       REAL(56)  = Constant E in the plant ISBL field cost equation.
```

```
;       REAL(57)  = Constant F in the plant ISBL field cost equation.
;       REAL(58)  = Number of spare trains.
;       REAL(59) -
;        REAL(70) = Future use.
;
;          Percent H2 recovery    H2 purity in mole %
     REAL 43.83285               99.98677                    &
;          Future use (8 items)
           0.0  0.0  0.0  0.0  0.0  0.0  0.0  0.0            &
;          Future use (10 items)
           0.0  0.0  0.0  0.0  0.0  0.0  0.0  0.0  0.0  0.0  &
;          Power              900/750 F steam   900 satd steam
           0.0 12254.04       0.0 0.0           0.0 0.0      &
;          600/720 F steam    600 satd steam    150 satd steam
           0.0 0.0            0.0 0.0           0.0 65.094   &
;          50 satd steam      Plant fuel        Cooling H20
           0.0 2.054966       0.0 0.0           0.0 42.705864 &
;          Process H20        Nitrogen
           0.0 0.854117       0.0 0.0         &
;          Future Use (6 items)
           0.0  0.0  0.0  0.0  0.0  0.0       &
;          Opers/day     (Opers/day)/train
           0.0            12.0               &
;          Ref Flow   Max Flow   Min Flow
           1.106      2.5        0.5         &
;          Plant cost equation constants.
;          A      B         E      F      Spares   Future use (2 items)
           0.0    130.0     0.8478 1.0    0.0      0.0   0.0    &
;          Future use (10 items)
           0.0  0.0  0.0  0.0  0.0  0.0  0.0  0.0  0.0  0.0
;
;  Set the temperature and pressure of the outlet streams.  These
;  values will override the default values in subroutine USR61.
   FLASH-SPECS STRM = H2-RICH   KODE=2   TEMP = 100.0  PRES = 3290.0 /
               STRM = SOUR-GAS  KODE=2   TEMP = 250.0  PRES = 14.7   /
               STRM = P61-GAS   KODE=2   TEMP = 111.0  PRES = 500.0
;
; Plant 6.2 - The Hydrogen purification by Pressure Swing Absorption
;             Plant.
BLOCK P62 USER
   SUBROUTINE MODEL = USR62   REPORT = USR62
   DESCRIPTION 'P6.2 - PSA H2 PURIFICATION PLANT (HIGH SPACE VELOCITY)'
   PARAM  NINT = 4   NREAL = 70
;      The following 4 integer parameters are:
;      INT(1) = User block summary report control switch.
;               0 => Write the complete user block summary report.
;               1 => Skip the capital cost portion of the summary
;                    report.
;               2 => Skip the capital cost and utilities portions
;                    of the summary report.
;               3 => Skip writing the entire user block summary report.
;      INT(2) = User block summary report destination control switch.
;               0 => Write the user block summary report to the normal
;                    ASPEN/SP output report file.
;               1 => Write the user block summary report to a separate
```

```
;                    user block output report file on logical unit 62
;                    called DCL62.REP.
;      INT(3) = Number of operating duplicate trains, excluding spares.
;               If INT(3) = 0, the minimum number of duplicate
;                 trains will be determined so that the capacity
;                 of each train does not exceed the maximum train
;                 capacity specified by variable REAL(52).
;               If INT(3) > 0, the number of duplicate trains.
;      INT(4) = History file additional output control switch.
;               0 => Write no additional output to the history file.
;               1 => Write the only the subroutine entry and exit
;                    messages to the history file.
;               2 => Write some additional output to the history file.
;             3-5 => Write some more additional output to the history
;                    file.  Larger values generate more intermediate
;                    output.
   INT  0  1  0  1
;      The following 70 real parameters are:
;      REAL(1)    = Percent hydrogen recovery to the hydrogen-rich
;                   product gas stream from the inlet gas stream.
;      REAL(2)    = Concentration of hydrogen in the hydrogen-rich
;                   product gas stream, mole % or vol%.
;      REAL(3)-
;       REAL(20) = Future use.
;      REAL(21)   = Constant factor for the power consumption, kw.
;      REAL(22)   = Power consumption per MM SCF/hr of H2 recovered,
;                   kw/(MM SCF/hr of H2 recovered).
;      REAL(23)   = Constant factor for the 900 psig / 750 F steam
;                   consumption, Mlbs/hr.
;      REAL(24)   = 900 psig / 750 F steam consumption per MM SCF/hr of
;                   H2 recovered, (Mlbs/hr)/(MM SCF/hr of H2 recovered).
;      REAL(25)   = Constant factor for the 900 psig saturated steam
;                   consumption, Mlbs/hr.
;      REAL(26)   = 900 psig saturated steam consumption per MM SCF/hr
;                   of H2 recovered, (Mlbs/hr)/(MM SCF/hr of H2 recovered).
;      REAL(27)   = Constant factor for the 600 psig / 720 F steam
;                   consumption, Mlbs/hr.
;      REAL(28)   = 600 psig / 720 F steam consumption per MM SCF/hr of
;                   H2 recovered, (Mlbs/hr)/(MM SCF/hr of H2 recovered).
;      REAL(29)   = Constant factor for the 600 psig saturated steam
;                   consumption, Mlbs/hr.
;      REAL(30)   = 600 psig saturated steam consumption per MM SCF/hr of
;                   H2 recovered, (Mlbs/hr)/(MM SCF/hr of H2 recovered).
;      REAL(31)   = Constant factor for the 150 psig saturated steam
;                   consumption, Mlbs/hr.
;      REAL(32)   = 150 psig saturated steam consumption per MM SCF/hr of
;                   H2 recovered, (Mlbs/hr)/(MM SCF/hr of H2 recovered).
;      REAL(33)   = Constant factor for the 50 psig saturated steam
;                   consumption, Mlbs/hr.
;      REAL(34)   = 50 psig saturated steam consumption per MM SCF/hr of
;                   H2 recovered, (Mlbs/hr)/(MM SCF/hr of H2 recovered).
;      REAL(35)   = Constant factor for the plant fuel consumption,
;                   MM BTU/hr.
;      REAL(36)   = Plant fuel consumption per MM SCF/hr of H2 recovered,
;                   (Mlbs/hr)/(MM SCF/hr of H2 recovered).
;
```

```
;       REAL(37)  = Constant factor for the cooling water consumption,
;                   Mgal/hr.
;       REAL(38)  = Cooling water consumption per MM SCF/hr of H2
;                   recovered, (Mlbs/hr)/(MM SCF/hr of H2 recovered).
;       REAL(39)  = Constant factor for the process water consumption,
;                   Mgal/hr.
;       REAL(40)  = Process water consumption per MM SCF/hr of H2
;                   recovered, (Mlbs/hr)/(MM SCF/hr of H2 recovered).
;       REAL(41)  = Constant factor for the nitrogen consumption,
;                   MM SCF/hr of N2
;       REAL(42)  = Nitrogen consumption per MM SCF/hr of H2 recovered,
;                   (MM SCF/hr of N2)/(MM SCF/hr of H2 recovered).
;       REAL(43) -
;        REAL(48) = Future use.
;       REAL(49)  = Constant factor for the number of operators per
;                   day, operators/day.
;       REAL(50)  = Number of operators per day per train,
;                   (operators/day)/train.
;       REAL(51)  = Reference hydrogen recovery rate for a single train
;                   in MM SCF/hr of H2 for the calculation of the
;                   ISBL field cost of a single train as a function of
;                   capacity.
;       REAL(52)  = Maximum size of a single train as defined by the
;                   hydrogen recovery rate in MM SCF/hr of H2
;                   recovered.
;       REAL(53)  = Minimum size of a single train as defined by the
;                   hydrogen recovery rate in MM SCF/hr of H2
;                   recovered.
;       REAL(54)  = Constant A in the plant ISBL field cost equation.
;       REAL(55)  = Constant B in the plant ISBL field cost equation.
;       REAL(56)  = Constant E in the plant ISBL field cost equation.
;       REAL(57)  = Constant F in the plant ISBL field cost equation.
;       REAL(58)  = Number of spare trains.
;       REAL(59) -
;        REAL(70) = Future use.
;
;        The cost of Plant 6.2 is included in Plant 6.1.
;          Percent H2 recovery    H2 purity in mole %
      REAL 89.5033                90.01665              &
;          Future use (8 items)
           0.0  0.0  0.0  0.0  0.0  0.0  0.0  0.0  &
;          Future use (10 items)
           0.0  0.0  0.0  0.0  0.0  0.0  0.0  0.0  0.0  0.0  &
;          Power              900/750 F steam   900 satd steam
           0.0 5485.989       0.0 0.0           0.0 0.0       &
;          600/720 F steam    600 satd steam    150 satd steam
           0.0 0.0            0.0 0.0           0.0 0.0       &
;          50 satd steam      Plant fuel        Cooling H20
           0.0 0.0            0.0 0.0           0.0 87.29583  &
;          Process H20        Nitrogen
           0.0 0.530875       0.0 0.0         &
;          Future Use (6 items)
           0.0  0.0  0.0  0.0  0.0  0.0      &
;          Opers/day      (Opers/day)/train
           0.0            0.0                &
```

```
;          Ref Flow   Max Flow   Min Flow
           3.61667    5.0        0.5        &
;          Plant cost equation constants.
;          A      B      E      F      Spares   Future use (2 items)
           0.0    0.0    0.7    1.0    0.0      0.0   0.0    &
;          Future use (10 items)
           0.0  0.0  0.0  0.0  0.0  0.0  0.0  0.0  0.0  0.0
;
;  Set the temperature and pressure of the outlet streams.  These
;  values will override the default values in subroutine USR62.
   FLASH-SPECS STRM = H2-2RICH  KODE=2   TEMP = 100.0  PRES = 3290.0 /
               STRM = SOUR-2GS  KODE=2   TEMP = 250.0  PRES = 14.7   /
               STRM = GAS-OUT   KODE=2   TEMP = 111.0  PRES = 25.0   /
               STRM = NAPHTHA2  KODE=2   TEMP = 100.0  PRES = 50.0
;
; Plant 7 - The naphtha reformer - use user Fortran block USR07.
BLOCK P07 USER
   SUBROUTINE MODEL = USR07   REPORT = USR07
   DESCRIPTION 'PLANT 7 - THE NAPHTHA REFORMER'
   PARAM  NINT = 4   NREAL = 70
;      The following 4 integer parameters are:
;      INT(1) = User block summary report control switch.
;               0 => Write the complete user block summary report.
;               1 => Skip the capital cost portion of the summary
;                    report.
;               2 => Skip the capital cost and utilities portions
;                    of the summary report.
;               3 => Skip writing the entire user block summary report.
;      INT(2) = User block summary report destination control switch.
;               0 => Write the user block summary report to the mormal
;                     ASPEN/SP output report file.
;               1 => Write the user block summary report to a separate
;                    user block output report file on logical unit 62
;                    called DCL07.REP.
;      INT(3) = Number of operating duplicate trains, excluding spares.
;               If INT(3) = 0, the minimum number of duplicate
;                 trains will be determined so that the capacity
;                 of each plant does not exceed the maximum train
;                 capacity specified by variable REAL(52).
;               If INT(3) > 0, the number of duplicate trains.
;      INT(4) = History file additional output control switch.
;               0 => Write no additional output to the history file.
;               1 => Write the only the subroutine entry and exit
;                    messages to the history file.
;               2 => Write some additional output to the history file.
;             3-5 => Write some more additional output to the history
;                    file.  Larger values generate more intermediate
;                    output.
    INT  0  1  0  1
;      The following 70 real parameters are:
;      REAL(1) -
;       REAL(20) = Future use.
;      REAL(21)  = Constant factor for the power consumption, kw.
;      REAL(22)  = Power consumption per Mlbs/hr of feed,
;                  kw/(Mlbs/hr of feed).
```

```
;       REAL(23)  = Constant factor for the 900 psig / 750 F steam
;                   consumption, Mlbs/hr.
;       REAL(24)  = 900 psig / 750 F steam consumption per Mlbs/hr of
;                   feed, (Mlbs/hr)/(Mlbs/hr of feed).
;       REAL(25)  = Constant factor for the 900 psig saturated steam
;                   consumption, Mlbs/hr.
;       REAL(26)  = 900 psig saturated steam consumption per Mlbs/hr of
;                   feed, (Mlbs/hr)/(Mlbs/hr of feed).
;       REAL(27)  = Constant factor for the 600 psig / 720 F steam
;                   consumption, Mlbs/hr.
;       REAL(28)  = 600 psig / 720 F steam consumption per Mlbs/hr of
;                   feed, (Mlbs/hr)/(Mlbs/hr of feed).
;       REAL(29)  = Constant factor for the 600 psig saturated steam
;                   consumption, Mlbs/hr.
;       REAL(30)  = 600 psig saturated steam consumption per Mlbs/hr of
;                   feed, (Mlbs/hr)/(Mlbs/hr of feed).
;       REAL(31)  = Constant factor for the 150 psig saturated steam
;                   consumption, Mlbs/hr.
;       REAL(32)  = 150 psig saturated steam consumption per Mlbs/hr of
;                   feed, (Mlbs/hr)/(Mlbs/hr of feed).
;       REAL(33)  = Constant factor for the 50 psig saturated steam
;                   consumption, Mlbs/hr.
;       REAL(34)  = 50 psig saturated steam consumption per Mlbs/hr of
;                   feed, (Mlbs/hr)/(Mlbs/hr of feed).
;       REAL(35)  = Constant factor for the plant fuel consumption,
;                   MM BTU/hr.
;       REAL(36)  = Plant fuel consumption per Mlbs/hr of feed,
;                   (MM BTU/hr)/(Mlbs/hr of feed).
;       REAL(37)  = Constant factor for the cooling water consumption,
;                   Mgal/hr.
;       REAL(38)  = Cooling water consumption per Mlbs/hr of feed,
;                   (Mgal/hr)/(Mlbs/hr of feed).
;       REAL(39)  = Constant factor for the process water consumption,
;                   Mgal/hr.
;       REAL(40)  = Process water consumption per Mlbs/hr of feed,
;                   (Mgal/hr)/(Mlbs/hr of feed).
;       REAL(41)  = Constant factor for the nitrogen consumption,
;                   MM SCF/hr of N2.
;       REAL(42)  = Nitrogen consumption per Mlbs/hr of feed,
;                   (MM SCF/hr of N2)/(Mlbs/hr of feed).
;       REAL(43) -
;        REAL(48) = Future use.
;       REAL(49)  = Constant factor for the number of operators per
;                   day, operators/day.
;       REAL(50)  = Number of operators per day per train,
;                   (operators/day)/train.
;       REAL(51)  = Reference feed rate to a single train in Mlbs/hr
;                   for the calculation of the ISBL field cost of a
;                   single train as a function of train capacity.
;       REAL(52)  = Maximum size of a single train as defined by the
;                   feed rate in Mlbs/hr.
;       REAL(53)  = Minimum size of a single train as defined by the
;                   feed rate in Mlbs/hr.
;       REAL(54)  = Constant A in the plant ISBL field cost equation.
;       REAL(55)  = Constant B in the plant ISBL field cost equation.
```

```
;       REAL(56)  = Constant E in the plant ISBL field cost equation.
;       REAL(57)  = Constant F in the plant ISBL field cost equation.
;       REAL(58)  = Number of spare trains.
;       REAL(59) -
;        REAL(70) = Future use.
;
;          Future use (10 items)
     REAL 0.0  0.0  0.0  0.0  0.0  0.0  0.0  0.0  0.0  0.0  &
;          Future use (10 items)
          0.0  0.0  0.0  0.0  0.0  0.0  0.0  0.0  0.0  0.0  &
;          Power              900/750 F steam   900 satd steam
          0.0 2.26494        0.0 0.0           0.0 0.0       &
;          600/720 F steam    600 satd steam    150 satd steam
          0.0 -0.314772      0.0 0.0           0.0 0.0       &
;          50 satd steam      Plant fuel        Cooling  H20
          0.0 0.0            0.0 1.41781       0.0 0.123590  &
;          Process H20        Nitrogen
          0.0 0.0            0.0 0.0         &
;          Future Use (6 items)
          0.0  0.0  0.0  0.0  0.0  0.0      &
;          Opers/day     (Opers/day)/train
          0.            8.                  &
;          Ref Flow   Max Flow   Min Flow
          224.289    400.0      50.0        &
;          Plant cost equation constants.
;          A      B      E      F      Spares   Future Use (3 items)
          0.0    30.7   0.75   1.0    0.0      0.0   0.0   &
;          Future Use (10 items)
          0.0  0.0  0.0  0.0  0.0  0.0  0.0  0.0  0.0  0.0

;  Set the temperature and pressure of the outlet streams.  These
;  values will override the default values in subroutine USR07.
   FLASH-SPECS STRM = 7S-H2     KODE=2   TEMP = 80.0  PRES = 14.7  /
               STRM = 7S-GAS    KODE=2   TEMP = 80.0  PRES = 14.7  /
               STRM = REFORMED  KODE=2   TEMP = 80.0  PRES = 14.7
;
; Plant 8.1 - The ROSE-SR unit - user Fortran block USR81.
BLOCK P81 USER
   SUBROUTINE MODEL = USR81   REPORT = USR81
   DESCRIPTION 'PLANT 8.1 - THE ROSE-SR UNIT'
   PARAM  NINT = 4   NREAL = 70
;      The following 4 integer parameters are:
;      INT(1) = User block summary report control switch.
;               0 => Write the complete user block summary report.
;               1 => Skip the capital cost portion of the summary
;                    report.
;               2 => Skip the capital cost and utilities portions
;                    of the summary report.
;               3 => Skip writing the entire user block summary report.
;      INT(2) = User block summary report destination control switch.
;               0 => Write the user block summary report to the normal
;                    ASPEN/SP output report file.
;               1 => Write the user block summary report to a separate
;                    user block output report file on logical unit 62
;                    called DCL81.REP.
```

```
;       INT(3) = Number of operating duplicate trains, excluding spares.
;                If INT(3) = 0, the minimum number of duplicate
;                  trains will be determined so that the capacity
;                  of each train does not exceed the maximum train
;                  capacity specified by variable REAL(52).
;                If INT(3) > 0, the number of duplicate plants.
;       INT(4) = History file additional output control switch.
;                0 => Write no additional output to the history file.
;                1 => Write the only the subroutine entry and exit
;                     messages to the history file.
;                2 => Write some additional output to the history file.
;              3-5 => Write some more additional output to the history
;                     file.  Larger values generate more intermediate
;                     output.
    INT  0  1  0  1
;       The following 70 real parameters are:
;       REAL(1)    = Hydrocarbon rejection factor.
;       REAL(2)-
;        REAL(20) = Future use.
;       REAL(21)  = Constant factor for the power consumption, kw.
;       REAL(22)  = Power consumption per Mlbs/hr of extract,
;                   kw/(Mlbs/hr of extract).
;       REAL(23)  = Constant factor for the 900 psig / 750 F steam
;                   consumption, Mlbs/hr.
;       REAL(24)  = 900 psig / 750 F steam consumption per Mlbs/hr of
;                   extract, (Mlbs/hr)/(Mlbs/hr of extract).
;       REAL(25)  = Constant factor for the 900 psig saturated steam
;                   consumption, Mlbs/hr.
;       REAL(26)  = 900 psig saturated steam consumption per Mlbs/hr of
;                   extract, (Mlbs/hr)/(Mlbs/hr of extract).
;       REAL(27)  = Constant factor for the 600 psig / 720 F steam
;                   consumption, Mlbs/hr.
;       REAL(28)  = 600 psig / 720 F steam consumption per Mlbs/hr of
;                   extract, (Mlbs/hr)/(Mlbs/hr of extract).
;       REAL(29)  = Constant factor for the 600 psig saturated steam
;                   consumption, Mlbs/hr.
;       REAL(30)  = 600 psig saturated steam consumption per Mlbs/hr of
;                   extract, (Mlbs/hr)/(Mlbs/hr of extract).
;       REAL(31)  = Constant factor for the 150 psig saturated steam
;                   consumption, Mlbs/hr.
;       REAL(32)  = 150 psig saturated steam consumption per Mlbs/hr of
;                   extract, (Mlbs/hr)/(Mlbs/hr of extract).
;       REAL(33)  = Constant factor for the 50 psig saturated steam
;                   consumption, Mlbs/hr.
;       REAL(34)  = 50 psig saturated steam consumption per Mlbs/hr of
;                   extract, (Mlbs/hr)/(Mlbs/hr of extract).
;       REAL(35)  = Constant factor for the plant fuel consumption,
;                   MM BTU/hr.
;       REAL(36)  = Plant fuel consumption per Mlbs/hr of extract,
;                   (Mlbs/hr)/(Mlbs/hr of extract).
;       REAL(37)  = Constant factor for the cooling water consumption,
;                   Mgal/hr.
;       REAL(38)  = Cooling water consumption per Mlbs/hr of extract,
;                   (Mlbs/hr)/(Mlbs/hr of extract).
;       REAL(39)  = Constant factor for the process water consumption,
```

```
;                   Mgal/hr.
;      REAL(40)  = Process water consumption per Mlbs/hr of extract,
;                  (Mlbs/hr)/(Mlbs/hr of extract).
;      REAL(41)  = Constant factor for the nitrogen consumption,
;                  MM SCF/hr of N2
;      REAL(42)  = Nitrogen consumption per Mlbs/hr of extract,
;                  (MM SCF/hr of N2)/(Mlbs/hr of extract).
;      REAL(43) -
;       REAL(48) = Future use.
;      REAL(49)  = Constant factor for the number of operators per
;                  day, operators/day.
;      REAL(50)  = Number of operators per day per train,
;                  (operators/day)/train.
;      REAL(51)  = Reference feed rate to a single train in Mlbs/hr of
;                  unit feed for the calculation of the capital cost of
;                  a single train as a function of train capacity.
;      REAL(52)  = Maximum size of a single train as defined by the
;                  unit feed rate in Mlbs/hr of unit feed.
;      REAL(53)  = Minimum size of a single train as defined by the
;                  unit feed rate in Mlbs/hr of unit feed.
;      REAL(54)  = Constant A in the plant costing equation.
;      REAL(55)  = Constant B in the plant costing equation.
;      REAL(56)  = Constant E in the plant costing equation.
;      REAL(57)  = Constant F in the plant costing equation.
;      REAL(58)  = Number of spare trains.
;      REAL(59) -
;       REAL(70) = Future use.
;         Hydrocarbon rejection factor
   REAL  0.96315  &
;         Future use (9 items)
          0.0  0.0  0.0  0.0  0.0  0.0  0.0  0.0  0.0  &
;         Future use (10 items)
          0.0  0.0  0.0  0.0  0.0  0.0  0.0  0.0  0.0  0.0  &
;         Power              900/750 F steam    900 satd steam
          0.0 8.098677       0.0 0.0            0.0 0.0       &
;         600/720 F steam    600 satd steam     150 satd steam
          0.0 0.0            0.0 0.0            0.0 0.0471832 &
;         50 satd steam      Plant fuel         Cooling H2O
          0.0 0.0            0.0 0.393518       0.0 0.0       &
;         Process H2O        Nitrogen
          0.0 0.0            0.0 0.0         &
;         Future Use (6 items)
          0.  0.  0.  0.  0.  0.             &
;         Opers/day     (Opers/day)/train
          0.0           8.0                  &
;         Ref Flow   Max Flow   Min Flow
          907.390   1500.0     500.0         &
;         Plant cost equation constants.
;         A      B        E      F      Spares   Future use (2 items)
          0.0    42.2     0.7215 1.0    0.0      0.0   0.0    &
;         Future use (10 items)
          0.0  0.0  0.0  0.0  0.0  0.0  0.0  0.0  0.0  0.0
;
;  Set the temperature and pressure of the outlet streams.  These
;  values will override the default values in subroutine USR81.
```

```
   FLASH-SPECS STRM = ROSE-XTR  KODE=2   TEMP = 300.0  PRES = 115.0 /
               STRM = ASH-CONC  KODE=2   TEMP = 150.0  PRES = 14.7
;
; Plant 9 - H2 Production by coal gasification, Use the User Fortran
; Block USR09.
BLOCK P09 USER
   SUBROUTINE MODEL = USR09   REPORT = USR09
   DESCRIPTION 'PLANT 9 - H2 PRODUCTION BY COAL GASIFICATION PLANT'
;    NOTE:  The gasifier parameters have been adjusted to match the
;           high space velocity case.
   PARAM  NINT = 4   NREAL = 70
;      The following 4 integer parameters are:
;      INT(1) = User block summary report control switch.
;               0 => Write the complete user block summary report.
;               1 => Skip the capital cost portion of the summary
;                    report.
;               2 => Skip the capital cost and utilities portions
;                    of the summary report.
;               3 => Skip writing the entire user block summary report.
;      INT(2) = User block summary report destination control switch.
;               0 => Write the user block summary report to the normal
;                    ASPEN/SP output report file called DCL09.REP.
;               1 => Write the user block summary report to a separate
;                     user block output report file on logical unit 62.
;      INT(3) = Number of operating duplicate trains, excluding spares.
;               If INT(3) = 0, the minimum number of duplicate
;                 trains will be determined so that the capacity
;                 of each train does not exceed the maximum train
;                 capacity specified by variable REAL(52).
;               If INT(3) > 0, the number of duplicate trains.
;      INT(4) = History file additional output control switch.
;               0 => Write no additional output to the history file.
;               1 => Write the only the subroutine entry and exit
;                    messages to the history file.
;               2 => Write some additional output to the history file.
;             3-5 => Write some more additional output to the history
;                    file.  Larger values generate more intermediate
;                    output.
    INT  0  1  0  1
;      The following 70 real parameters are:
;      REAL(1)   = Molar CO/CO2 ratio in the gasifier product gas.
;      REAL(2)   = Fraction of carbon entering the gasifier that goes
;                  to carbonyl sulfide (COS).
;      REAL(3)   = Fraction of carbon entering the gasifier that goes
;                  to methane (CH4).
;      REAL(4)   = Fraction of nitrogen entering the gasifier that goes
;                  to ammonia (NH3).
;      REAL(5)   = Carbon content of the slag produced by the gasifier,
;                  wt %.
;      REAL(6)   = Fraction of carbon monoxide (CO) entering the shift
;                  reactors that is shifted; i.e., converted to carbon
;                  dioxide (CO2) by the chemical reaction
;                      CO + H2O -----> CO2 + H2
;      REAL(7)   = Fraction of carbonyl sulfide (COS) entering the shift
;                  reactor section that is hydrolyzed; i.e., converted
;
```

```
;                    to carbon dioxide (CO2) and hydrogen sulfide (H2S)
;                    by the chemical reaction
;                        COS + H2O -----> CO2 + H2S
;       REAL(8)    = Future use.
;       REAL(9)-
;        REAL(20)  = Rectisol section component distribution factors,
;                    where
;       REAL(9)    = Fraction of inlet H2 going to the hydrogen-rich
;                    gas stream.
;       REAL(10)   = Fraction of inlet H2 going to the acid gas stream.
;       REAL(11)   = Fraction of inlet CO going to the hydrogen-rich
;                    gas stream.
;       REAL(12)   = Fraction of inlet CO going to the acid gas stream.
;       REAL(13)   = Fraction of inlet CO2 going to the hydrogen-rich
;                    gas stream.
;       REAL(14)   = Fraction of inlet CO2 going to the acid gas stream.
;       REAL(15)   = Fraction of inlet CH4 going to the hydrogen-rich
;                    gas stream.
;       REAL(16)   = Fraction of inlet CH4 going to the acid gas stream.
;       REAL(17)   = Fraction of inlet N2 going to the hydrogen-rich
;                    gas stream.
;       REAL(18)   = Fraction of inlet N2 going to the acid gas stream.
;       REAL(19)   = Fraction of inlet H2S going to the hydrogen-rich
;                    gas stream.
;       REAL(20)   = Fraction of inlet H2S going to the acid gas stream.
;       REAL(21)   = Constant factor for the power consumption, kw.
;       REAL(22)   = Power consumption per MM SCF/hr of hydrogen
;                    produced, kw/(MM SCF/hr of H2).
;       REAL(23)   = Constant factor for the 900 psig / 750 F steam
;                    consumption, Mlbs/hr.
;       REAL(24)   = 900 psig / 750 F steam consumption per MM SCF/hr of
;                    hydrogen produced, (Mlbs/hr)/(MM SCF/hr of H2).
;       REAL(25)   = Constant factor for the 900 psig saturated steam
;                    consumption, Mlbs/hr.
;       REAL(26)   = 900 psig saturated steam consumption per MM SCF/hr of
;                    hydrogen produced, (Mlbs/hr)/(MM SCF/hr of H2).
;       REAL(27)   = Constant factor for the 600 psig / 720 F steam
;                    consumption, Mlbs/hr.
;       REAL(28)   = 600 psig / 720 F steam consumption per MM SCF/hr of
;                    hydrogen produced, (Mlbs/hr)/(MM SCF/hr of H2).
;       REAL(29)   = Constant factor for the 600 psig saturated steam
;                    consumption, Mlbs/hr.
;       REAL(30)   = 600 psig saturated steam consumption per MM SCF/hr of
;                    hydrogen produced, (Mlbs/hr)/(MM SCF/hr of H2).
;       REAL(31)   = Constant factor for the 150 psig saturated steam
;                    consumption, Mlbs/hr.
;       REAL(32)   = 150 psig saturated steam consumption per MM SCF/hr of
;                    hydrogen produced, (Mlbs/hr)/(MM SCF/hr of H2).
;       REAL(33)   = Constant factor for the 50 psig saturated steam
;                    consumption, Mlbs/hr.
;       REAL(34)   = 50 psig saturated steam consumption per MM SCF/hr of
;                    hydrogen produced, (Mlbs/hr)/(MM SCF/hr of H2).
;       REAL(35)   = Constant factor for the plant fuel consumption,
;                    MM BTU/hr.
;       REAL(36)   = Plant fuel consumption per MM SCF/hr of hydrogen
```

```
;          Component distribution factors for N2 to H2 and acid gas.
           0.0932727   0.0923972                                  &
;          Component distribution factors for H2S to H2 and acid gas.
           0.0         0.990203                                   &
;          Power                900/750 F steam   900 satd steam
           0.0 3679.14335       0.0 0.0           0.0 0.0         &
;          600/720 F steam      600 satd steam    150 satd steam
           0.0 0.0              0.0 -16.98424     0.0 -44.40466   &
;          50 satd steam        Plant fuel        Cooling  H2O
           0.0 -45.47563        0.0 -57.09919     0.0 183.6952    &
;          Process H2O          Nitrogen
           0.0 4.176796         0.0 0.0824568   &
;          Future Use (6 items)
           0.  0.  0.  0.  0.  0.              &
;          Opers/day     (Opers/day)/train
           0.0           24.                   &
;          Ref Flow   Max Flow   Min Flow
           3.436      3.5        1.0         &
;          Plant cost equation constants.
;          A      B       E      F      Spares   Future use (3 items)
           0.0    52.7    0.7658 1.0    0.       0.0   0.0    &
;          Future use (10 items)
           0.0  0.0  0.0  0.0  0.0  0.0  0.0  0.0  0.0  0.0
;
;  Set the temperature and pressure of the outlet streams.  These
;  values will override the default values in subroutine USR09.
   FLASH-SPECS STRM = H2-GAS     KODE=2   TEMP = 80.   PRES = 14.7  /
               STRM = H2S-GAS    KODE=2   TEMP = 80.   PRES = 14.7  /
               STRM = VENT-GAS   KODE=2   TEMP = 80.   PRES = 14.7  /
               STRM = 9S-SH2O    KODE=2   TEMP = 80.   PRES = 14.7  /
               STRM = SLAG       KODE=2   TEMP = 80.   PRES = 14.7
;
;  Plant 9.1 - Steam Reforming of Natural Gas Plant.
BLOCK P91 USER
   SUBROUTINE MODEL = USR91   REPORT = USR91
   DESCRIPTION 'PLANT 9.1 - STEAM REFORMING OF NATURAL GAS PLANT'
   PARAM  NINT = 4   NREAL = 70
;      The following 4 integer parameters are:
;      INT(1) = User block summary report control switch.
;               0 => Write the complete user block summary report.
;               1 => Skip the capital cost portion of the summary
;                    report.
;               2 => Skip the capital cost and utilities portions
;                    of the summary report.
;               3 => Skip writing the entire user block summary report.
;      INT(2) = User block summary report destination control switch.
;               0 => Write the user block summary report to the normal
;                    ASPEN/SP output report file.
;               1 => Write the user block summary report to a separate
;                    user block output report file on logical unit 62
;                    called DCL91.REP.
;      INT(3) = Number of operating duplicate plants, excluding spares.
;               If INT(3) = 0, the minimum number of duplicate
;                 plants will be determined so that the capacity
;                 of each plant does not exceed the maximum plant
```

```
;       REAL(39)  = Constant factor for the process water consumption,
;                   Mgal/hr.
;       REAL(40)  = Process water consumption per MM SCF/hr of hydrogen
;                   produced, (Mgal/hr)/(MM SCF/hr of H2).
;       REAL(41)  = Constant factor for the nitrogen consumption,
;                   MM SCF/hr of N2..
;       REAL(42)  = Nitrogen consumption per MM SCF/hr of hydrogen
;                   produced, (MM SCF/hr of N2)/(MM SCF/hr of H2).
;       REAL(43) -
;        REAL(48) = Future use.
;       REAL(49)  = Constant factor for the number of operators per
;                   day, operators/day.
;       REAL(50)  = Number of operators per day per operating train,
;                   (operators/day)/train.
;       REAL(51)  = Reference hydrogen production rate of a single train
;                   in MM SCF/hr of H2 for the calculation of the ISBL
;                   field cost of a single train as a function of train
;                   capacity.
;       REAL(52)  = Maximum plant size as defined by the hydrogen
;                   production rate in MM SCF/hr of H2.
;       REAL(53)  = Minimum plant size as defined by the hydrogen
;                   production rate in MM SCF/hr of H2.
;       REAL(54)  = Constant A in the plant ISBL field cost equation.
;       REAL(55)  = Constant B in the plant ISBL field cost equation.
;       REAL(56)  = Constant E in the plant ISBL field cost equation.
;       REAL(57)  = Constant F in the plant ISBL field cost equation.
;       REAL(58)  = Number of spare plants.
;       REAL(59) -
;        REAL(70) = Future use.
;
;  NOTES: 1. MM SCF/hr of hydrogen produced means MM SCF/hr of hydrogen
;            in the hydrogen rich product gas stream and NOT the total
;            flow rate of the hydrogen rich product gas stream.
;         2. The number of operators in this plant and Plants 31.1 and
;            31.4 is set so as to maintain the same total number of
;            operators as used for the baseline design.
;
;         Frac CH4 to CO2  Frac CH4 to CO  Frac recovered  H2 Purity
     REAL 0.638648         0.04429         0.8862694       100.0 &
;         Future Use (6 items)
          0.0  0.0  0.0  0.0  0.0  0.0                      &
;         Future Use (10 items)
          0.0  0.0  0.0  0.0  0.0  0.0  0.0  0.0  0.0  0.0  &
;         Power              900/750 F steam   900 satd steam
          0.0 354.158        0.0 0.0           0.0 0.0       &
;         600/720 F steam    600 satd steam    150 satd steam
          0.0 0.0            0.0 -65.3773      0.0 0.0       &
;         50 satd steam      Plant fuel        Cooling  H2O
          0.0 0.0            0.0 89.0448       0.0 32.6902   &
;         Process H2O        Nitrogen
          0.0 0.0            0.0 0.0           &
;         Future Use (6 items)
          0.0  0.0  0.0  0.0  0.0  0.0         &
;         Opers/day      (Opers/day)/train
          0.0            8.0                   &
```

```
;         Ref Flow      Max Flow     Min Flow
          5.77237       6.75         2.0      &
;         Plant cost equation constants.
;         A      B       E      F      Spares   Future Use (2 items)
          0.0    68.1    0.75   1.0    0.0      0.0    0.0    &
;         Future Use (10 items)
          0.0  0.0  0.0  0.0  0.0  0.0  0.0  0.0   0.0
;
;  Set the temperature and pressure of the outlet streams.  These
;  values will override the default values in subroutine USR091.
   FLASH-SPECS STRM = H2-PROD    KODE=2  TEMP = 100.0  PRES = 500.0 /
               STRM = FLUE-GAS   KODE=2  TEMP = 250.0  PRES = 14.7
;
; Plant 10 - Air Separation Plant - Use the User Fortran Model USR10.
BLOCK P10 USER
   SUBROUTINE MODEL = USR10   REPORT = USR10
   DESCRIPTION 'PLANT 10 - AIR SEPARATION PLANT'
   PARAM  NINT = 4   NREAL = 70
;      The following 4 integer parameters are:
;      INT(1) = User block summary report control switch.
;               0 => Write the complete user block summary report.
;               1 => Skip the capital cost portion of the summary
;                    report.
;               2 => Skip the capital cost and utilities portions
;                    of the summary report.
;               3 => Skip writing the entire user block summary report.
;      INT(2) = User block summary report destination control switch.
;               0 => Write the complete user block summary report to
;                    the normal ASPEN/SP output report file.
;               1 => Write the complete user block summary report to
;                    a separate user block output report file on
;                    logical unit 62 CALLED DCL10.REP.
;      INT(3) = Number of operating duplicate trains, excluding
;               spares.
;               If INT(3) = 0, the minimun number of duplicate
;                 trains will be determined so that the capacity
;                 of each train does not exceed the maximum train
;                 capacity specified by variable REAL(52).
;               If INT(3) > 0, the number of duplicate trains.
;      INT(4) = History file additional output control switch.
;               0 => Write no additional output to the history file.
;               1 => Write the only the subroutine entry and exit
;                    messages to the history file.
;               2 => Write some additional output to the history file.
;             3-5 => Write some more additional output to the history
;                    file.  Larger values generate more intermediate
;                    output.
     INT  0  1  0  1
;      The following 70 real parameters are:
;      REAL(1)   = Purity of the product oxygen stream, mole %.
;      REAL(2)   = Purity of the product nitrogen stream, mole %.
;      REAL(3) -
;       REAL(20) = Future use.
;      REAL(21)  = Constant factor for the power consumption, kw.
;      REAL(22)  = Power consumption per MM SCF/hr of the oxygen stream
```

```
;                 flow rate, kw/(MM SCF/hr of O2).
;       REAL(23)  = Constant factor for the 900 psig / 750 F steam
;                   consumption, Mlbs/hr.
;       REAL(24)  = 900 psig / 750 F steam consumption per MM SCF/hr of
;                   the oxygen stream flow rate,
;                   (Mlbs/hr)/(MM SCF/hr of O2).
;       REAL(25)  = Constant factor for the 900 psig saturated steam
;                   consumption, Mlbs/hr.
;       REAL(26)  = 900 psig saturated steam consumption per MM SCF/hr of
;                   the oxygen stream flow rate,
;                   (Mlbs/hr)/(MM SCF/hr of O2).
;       REAL(27)  = Constant factor for the 600 psig / 720 F steam
;                   consumption, Mlbs/hr.
;       REAL(28)  = 600 psig / 720 F steam consumption per MM SCF/hr of
;                   the oxygen stream flow rate,
;                   (Mlbs/hr)/(MM SCF/hr of O2).
;       REAL(29)  = Constant factor for the 600 psig saturated steam
;                   consumption, Mlbs/hr.
;       REAL(30)  = 600 psig saturated steam consumption per MM SCF/hr of
;                   the oxygen stream flow rate,
;                   (Mlbs/hr)/(MM SCF/hr of O2).
;       REAL(31)  = Constant factor for the 150 psig saturated steam
;                   consumption, Mlbs/hr.
;       REAL(32)  = 150 psig saturated steam consumption per MM SCF/hr of
;                   the oxygen stream flow rate,
;                   (Mlbs/hr)/(MM SCF/hr of O2).
;       REAL(33)  = Constant factor for the 50 psig saturated steam
;                   consumption, Mlbs/hr.
;       REAL(34)  = 50 psig saturated steam consumption per MM SCF/hr of
;                   the oxygen stream flow rate,
;                   (Mlbs/hr)/(MM SCF/hr of O2).
;       REAL(35)  = Constant factor for the plant fuel consumption,
;                   MM BTU/hr.
;       REAL(36)  = Plant fuel consumption per MM SCF/hr of the oxygen
;                   stream flow rate, (MM BTU/hr)/(MM SCF/hr of O2).
;       REAL(37)  = Constant factor for the cooling water consumption,
;                   Mgal/hr.
;       REAL(38)  = Cooling water consumption per MM SCF/hr of the oxygen
;                   stream flow rate, (Mgal/hr)/(MM SCF/hr of O2).
;       REAL(39)  = Constant factor for the process water consumption,
;                   Mgal/hr.
;       REAL(40)  = Process water consumption per MM SCF/hr of the oxygen
;                   stream flow rate, (Mgal/hr)/(MM SCF/hr of O2).
;       REAL(41)  = Constant factor for the nitrogen consumption,
;                   MM SCF/hr of N2.
;       REAL(42)  = Nitrogen consumption per MM SCF/hr of the oxygen
;                   stream flow rate,
;                   (MM SCF/hr of N2)/(MM SCF/hr of O2).
;       REAL(43) -
;        REAL(48) = Future use.
;       REAL(49)  = Constant factor for the number of operators per
;                   day, operators/day.
;       REAL(50)  = Number of operators per day per train,
;                   (operators/day)/train.
;       REAL(51)  = Reference oxygen production rate for a single train
```

```
;                   in MM SCF/hr of O2 for the calculation of the
;                   ISBL field cost of a single train as a function of
;                   train capacity.
;      REAL(52)  = Maximum size of a single train as defined by the
;                   oxygen production rate in MM SCF/hr of O2.
;      REAL(53)  = Minimum size of a single train as defined by the
;                   oxygen production rate in MM SCF/hr of O2.
;      REAL(54)  = Constant A in the plant ISBL field cost equation.
;      REAL(55)  = Constant B in the plant ISBL field cost equation.
;      REAL(56)  = Constant E in the plant ISBL field cost equation.
;      REAL(57)  = Constant F in the plant ISBL field cost equation.
;      REAL(58)  = Number of spare trains.
;      REAL(59) -
;       REAL(70) = Future use.
;
;     NOTES:
;       1.  This model does not consider Argon as a separate element.
;           Hence, argon is lumped with nitrogen.
;       2.  MM SCF/hr of O2 means the oxygen production rate in
;           MM SCF/hr of O2 in the product oxygen stream and NOT
;           the total flow rate of the product oxygen stream.
;
;         %O2 in O2    %N2 in N2   Future Use (8 items)
     REAL 99.5003      100.0       0.0  0.0  0.0  0.0  0.0  0.0  0.0  0.0  &
;         Future Use (10 items)
          0.0  0.0  0.0  0.0  0.0  0.0  0.0  0.0  0.0  0.0  &
;         Power              900/750 F steam   900 satd steam
          0.0 18143.97       0.0 0.0           0.0 0.0       &
;         600/720 F steam    600 satd steam    150 satd steam
          0.0 0.0            0.0 0.0           0.0 0.0       &
;         50 satd steam      Plant fuel        Cooling  H2O
          0.0 0.0            0.0 0.0           0.0 0.0       &
;         Process H2O        Nitrogen
          0.0 0.0            0.0 0.0         &
;         Future Use (6 items)
          0.0  0.0  0.0  0.0  0.0  0.0       &
;         Opers/day      (Opers/day)/train
          4.0            0.0                 &
;         Ref Flow      Max Flow      Min Flow
          1.763605      1.875         1.0     &
;         Plant cost equation costants.
;         A        B        E        F       Spares   Future use (2 items)
          0.0      38.2     0.7028   1.0     0.0      0.0   0.0    &
;         Future use (10 items)
          0.0  0.0  0.0  0.0  0.0  0.0  0.0  0.0  0.0  0.0
;
;  Set the temperature and pressure of the outlet streams.  These
;  values will override the default values in subroutine USR10.
   FLASH-SPECS STRM = 10S01   KODE=2   TEMP =   80.0   PRES = 350.0  /
               STRM = 10S02   KODE=2   TEMP = -275.0   PRES = 164.7
;
; Plant 11 - Sulfur Recovery Plant, Use the User Fortran Model USR11.
BLOCK P11 USER
   SUBROUTINE MODEL = USR11   REPORT = USR11
   DESCRIPTION 'PLANT 11 - THE SULFUR RECOVERY PLANT'
```

```
PARAM  NINT = 4   NREAL = 70
;     The following 4 integer parameters are:
;     INT(1) = User block summary report control switch.
;              0 => Write the complete user block summary report.
;              1 => Skip the capital cost portion of the summary
;                   report.
;              2 => Skip the capital cost and utilities portions
;                   of the summary report.
;              3 => Skip writing the entire user block summary report.
;     INT(2) = User block summary report destination control switch.
;              0 => Write the user block summary report to the
;                   normal ASPEN/SP output report file.
;              1 => Write the user block summary report to a separate
;                   user block output report file on logical unit 62
;                   called DCL11.REP.
;     INT(3) = Number of operating duplicate trains, excluding spares.
;              If INT(3) = 0, the minimun number of duplicate
;                trains will be determined so that the capacity
;                of each train does not exceed the maximum train
;                capacity specified by variable REAL(52).
;              If INT(3) > 0, the number of duplicate trains.
;     INT(4) = History file additional output control switch.
;              0 => Write no additional output to the history file.
;              1 => Write the only the subroutine entry and exit
;                   messages to the history file.
;              2 => Write some additional output to the history file.
;            3-5 => Write some more additional output to the history
;                   file.  Larger values generate more intermediate
;                   output.
  INT  0  1  0  1
;     The following 70 real parameters are:
;     REAL(1)   = Fractional sulfur recovery; fraction of sulfur in
;                 the entering H2S and COS that is recovered in the
;                 product liquid sulfur stream.  All entering liquid
;                 sulfur entering in the feed stream is assumed to
;                 be recovered in the liquid sulfur product stream.
;     REAL(2) -
;      REAL(20) = Future use.
;     REAL(21)  = Constant factor for the power consumption, kw.
;     REAL(22)  = Power consumption per Mlbs/hr of product sulfur,
;                 kw/(Mlbs/hr).
;     REAL(23)  = Constant factor for the 900 psig / 750 F steam
;                 consumption, Mlbs/hr.
;     REAL(24)  = 900 psig / 750 F steam consumption per Mlbs/hr of
;                 product sulfur, (Mlbs/hr)/(Mlbs/hr).
;     REAL(25)  = Constant factor for the 900 psig saturated steam
;                 consumption, Mlbs/hr.
;     REAL(26)  = 900 psig saturated steam consumption per Mlbs/hr of
;                 product sulfur, (Mlbs/hr)/(Mlbs/hr).
;     REAL(27)  = Constant factor for the 600 psig / 720 F steam
;                 consumption, Mlbs/hr.
;     REAL(28)  = 600 psig / 720 F steam consumption per Mlbs/hr of
;                 product sulfur, (Mlbs/hr)/(Mlbs/hr).
;     REAL(29)  = Constant factor for the 600 psig saturated steam
;                 consumption, Mlbs/hr.
;
```

```
;       REAL(30)  = 600 psig saturated steam consumption per Mlbs/hr of
;                   product sulfur, (Mlbs/hr)/(Mlbs/hr).
;       REAL(31)  = Constant factor for the 150 psig saturated steam
;                   consumption, Mlbs/hr.
;       REAL(32)  = 150 psig saturated steam consumption per Mlbs/hr of
;                   product sulfur, (Mlbs/hr)/(Mlbs/hr).
;       REAL(33)  = Constant factor for the 50 psig saturated steam
;                   consumption, Mlbs/hr.
;       REAL(34)  = 50 psig saturated steam consumption per Mlbs/hr of
;                   product sulfur, (Mlbs/hr)/(Mlbs/hr).
;       REAL(35)  = Constant factor for the plant fuel consumption,
;                   MM BTU/hr.
;       REAL(36)  = Plant fuel consumption per Mlbs/hr of product sulfur,
;                   (MM BTU/hr)/(Mlbs/hr).
;       REAL(37)  = Constant factor for the cooling water consumption,
;                   Mgal/hr.
;       REAL(38)  = Cooling water consumption per Mlbs/hr of product
;                   sulfur (Mgal/hr)/(Mlbs/hr).
;       REAL(39)  = Constant factor for the process water consumption,
;                   Mgal/hr.
;       REAL(40)  = Process water consumption per Mlbs/hr of product
;                   sulfur, (Mgal/hr)/(Mlbs/hr).
;       REAL(41)  = Constant factor for the nitrogen consumption,
;                   MM SCF/hr of N2.
;       REAL(42)  = Nitrigen consumption per Mlbs/hr of product sulfur,
;                   (MM SCF/hr of N2)/(Mlbs/hr).
;       REAL(43) -
;        REAL(48) = Future use.
;       REAL(49)  = Constant factor for the number of operators per
;                   day, operators/day.
;       REAL(50)  = Number of operators per day per train,
;                   (operators/day)/train.
;       REAL(51)  = Reference product sulfur flow rate of a single train
;                   in Mlbs/hr of S for the calculation of the ISBL field
;                   cost of a single train as a function of capacity.
;       REAL(52)  = Maximum size of a single train as defined by the
;                   product sulfur flow rate in Mlbs/hr of S.
;       REAL(53)  = Minimum size of a single train as defined by the
;                   product sulfur flow rate in Mlbs/hr of S.
;       REAL(54)  = Constant A in the plant ISBL field cost equation.
;       REAL(55)  = Constant B in the plant ISBL field cost equation.
;       REAL(56)  = Constant E in the plant ISBL field cost equation.
;       REAL(57)  = Constant F in the plant ISBL field cost equation.
;       REAL(58)  = Number of spare trains.
;       REAL(59) -
;        REAL(70) = Future use.
;
;           S recovery
      REAL 0.998482    &
;           Future Use (19 items)
            0.0  0.0  0.0  0.0  0.0  0.0  0.0  0.0  0.0       &
            0.0  0.0  0.0  0.0  0.0  0.0  0.0  0.0  0.0  0.0  &
;           Power              900/750 F steam   900 satd steam
            0.0 49.60954       0.0 0.0           0.0 0.0       &
;           600/720 F steam    600 satd steam    150 satd steam
```

```
          0.0 0.0            0.0 0.971388       0.0 -3.022277 &
;         50 satd steam      Plant fuel         Cooling  H2O
          0.0 0.882473       0.0 1.117916       0.0 7.89929   &
;         Process H2O        Nitrogen
          0.0 0.0            0.0 0.0          &
;         Future Use (6 items)
          0.0  0.0  0.0  0.0  0.0  0.0       &
;         Opers/day     (Opers/day)/train
          0.0           5.0                  &
;         Ref Flow     Max Flow     Min Flow
          15.4305      16.5         5.0      &
;         Plant cost equation costants.
;         A       B        E      F      Spares   Future use (3 items)
          0.0     11.675   0.7823 1.0    0.0      0.0   0.0    &
;         Future use (10 items)
          0.0  0.0  0.0  0.0  0.0  0.0  0.0  0.0  0.0  0.0
;
;  Set the temperature and pressure of the outlet streams.  These
;  values will override the default values in subroutine USR01.
   FLASH-SPECS STRM = 11S-FGAS  KODE=2   TEMP = 80.0   PRES = 14.7  /
               STRM = 11S-LIQS  KODE=2   TEMP = 80.0   PRES = 14.7
;
; Plant 31 - The Utilities plant - user Fortran block USR31.
BLOCK P31 USER
   SUBROUTINE MODEL = USR31   REPORT = USR31
   DESCRIPTION 'PLANTS 31 - THE UTILITIES PLANT'
   PARAM  NINT = 20   NREAL = 20
;      The following 20 integer parameters are:
;      INT(1) = User block summary report control switch.
;               0 => Write the complete user block summary report.
;               1 => Not used.
;               2 => Not used.
;               3 => Skip writing the entire user block summary report.
;      INT(2) = User block summary report destination control switch.
;               0 => Write the user block summary report to the normal
;                    ASPEN/SP output report file.
;               1 => Write the user block summary report to a separate
;                    user block output report file on logical unit 62
;                    called DCL02.REP.
;      INT(3) = Number of operating duplicate trains, excluding spares.
;               If INT(3) = 0, the minimum number of duplicate
;                 trains will be determined so that the capacity
;                 of each train does not exceed the maximum train
;                 capacity specified by variable REAL(2).
;               If INT(3) > 0, the number of duplicate trains.
;      INT(4) = History file additional output control switch.
;               0 => Write no additional output to the history file.
;               1 => Write the only the subroutine entry and exit
;                    messages to the history file.
;               2 => Write some additional output to the history file.
;             3-5 => Write some more additional output to the history
;                    file.  Larger values generate more intermediate
;                    output.
;      INT(5) = Future use.
;      INT(6) -  Switches to select which fuels are burned in the steam
```

```
;       INT(10)  boiler to produce steam and/or electric power to
;                satisfy the steam demand.  The fuel specified in
;                INT(6) is used until it is all consumed, the steam
;                demand is satisfied, or the capacity to use this fuel
;                is reached.  Then the INT(7) fuel is used, etc.
;                The fuel codes are
;                  1 = Coal
;                  2 = ROSE-SR unit bottoms
;                  3 = Coke
;                  4 = Natural gas
;                  5 = Plant fuel
;      INT(11) - Switches to select which fuels are burned to satisfy
;       INT(16)  the electric power demand.  The fuel specified in
;                INT(11) is used until it is all consumed, the power
;                demand is satisfied, or the capacity to use this fuel
;                is reached.  Then the INT(12) fuel is used, etc.
;                The fuel codes are
;                  1 = Coal
;                  2 = ROSE-SR unit bottoms
;                  3 = Coke
;                  4 = Natural gas
;                  5 = Plant fuel
;                  6 = Purchased electric power
;      INT(17) -
;       INT(20)  Future use.
   INT  0  1  0  1  0  4  1  2  3  5    &
        4  1  2  3  5  6  0  0  0  0
;
;      The following 20 real parameters are:
;      REAL(1)  = Reference electric power generation rate of a single
;                 train in MW.
;      REAL(2)  = Maximum size of a single train as defined by the
;                 electric power generation rate in MW.
;      REAL(3)  = Minimum size of a single train as defined by the
;                 electric power generation rate in MW.
;      REAL(4)  = Constant A in the plant costing equation.
;      REAL(5)  = Constant B in the plant costing equation.
;      REAL(6)  = Constant E in the plant costing equation.
;      REAL(7)  = Constant F in the plant costing equation.
;      REAL(8)  = Number of spare trains.
;      REAL(9)  = Future use
;      REAL(10) = Future use
;      REAL(11) = Constant factor for the number of operators per
;                 day, operators/day.
;      REAL(12) = Number of operators per day per train,
;                 (operators/day)/train.
;      REAL(13) -
;       REAL(20) = Future use.
;
;         Ref MW    Max size   Min size
    REAL 79.259    84.0       1.0        &
;         Plant cost equation constants.
;         A      B       E      F      Spares   Future use (2 items)
          0.0    87.466  0.7    1.0    0.0      0.0   0.0   &
;         Opers/day     (Opers/day)/train
```

```
          6.0          2.0                &
;         Future use (8 items)
          0.0   0.0   0.0   0.0   0.0   0.0   0.0   0.0
;
; Plants 31.1 and 31.4 - The Fluidized Bed Combustor and Steam Turbine
; Generator unit - user Fortran block USRA6.
BLOCK P314 USER
   SUBROUTINE MODEL = USRA6   REPORT = USRA6
   DESCRIPTION 'PLANTS 31.1 AND 31.4 - THE FLUIDIZED BED COMBUSTOR AND
   STEAM TURBINE GENERATOR UNIT'
   PARAM  NINT = 4   NREAL = 70
;      The following 4 integer parameters are:
;      INT(1) = User block summary report control switch.
;               0 => Write the complete user block summary report.
;               1 => Skip the capital cost portion of the summary
;                    report.
;               2 => Skip the capital cost and utilities portions
;                    of the summary report.
;               3 => Skip writing the entire user block summary report.
;      INT(2) = User block summary report destination control switch.
;               0 => Write the user block summary report to the normal
;                    ASPEN/SP output report file.
;               1 => Write the user block summary report to a separate
;                    user block output report file on logical unit 62
;                    called DCLA6.REP.
;      INT(3) = Number of operating duplicate trains, excluding spares.
;               If INT(3) = 0, the minimum number of duplicate
;                 trains will be determined so that the capacity
;                 of each train does not exceed the maximum train
;                 capacity specified by variable REAL(52).
;               If INT(3) > 0, the number of duplicate plants.
;      INT(4) = History file additional output control switch.
;               0 => Write no additional output to the history file.
;               1 => Write the only the subroutine entry and exit
;                    messages to the history file.
;               2 => Write some additional output to the history file.
;             3-5 => Write some more additional output to the history
;                    file.  Larger values generate more intermediate
;                    output.
    INT  0  1  0  1
;      The following 70 real parameters are:
;      REAL(1)    = Solids production expressed as fraction of URCOAL
;                   in feed ending up in solids.
;      REAL(2)-
;       REAL(20) = Future use.
;      REAL(21)   = Constant factor for the power consumption, kw.
;      REAL(22)   = Power consumption per Mlbs/hr of unit feed,
;                   kw/(Mlbs/hr of unit feed).
;      REAL(23)   = Constant factor for the 900 psig / 750 F steam
;                   consumption, Mlbs/hr.
;      REAL(24)   = 900 psig / 750 F steam consumption per Mlbs/hr of
;                   unit feed, (Mlbs/hr)/(Mlbs/hr of unit feed).
;      REAL(25)   = Constant factor for the 900 psig saturated steam
;                   consumption, Mlbs/hr.
;      REAL(26)   = 900 psig saturated steam consumption per Mlbs/hr of
```

```
;                 unit feed, (Mlbs/hr)/(Mlbs/hr of unit feed).
;      REAL(27)  = Constant factor for the 600 psig / 720 F steam
;                  consumption, Mlbs/hr.
;      REAL(28)  = 600 psig / 720 F steam consumption per Mlbs/hr of
;                  unit feed, (Mlbs/hr)/(Mlbs/hr of unit feed).
;      REAL(29)  = Constant factor for the 600 psig saturated steam
;                  consumption, Mlbs/hr.
;      REAL(30)  = 600 psig saturated steam consumption per Mlbs/hr of
;                  unit feed, (Mlbs/hr)/(Mlbs/hr of unit feed).
;      REAL(31)  = Constant factor for the 150 psig saturated steam
;                  consumption, Mlbs/hr.
;      REAL(32)  = 150 psig saturated steam consumption per Mlbs/hr of
;                  unit feed, (Mlbs/hr)/(Mlbs/hr of unit feed).
;      REAL(33)  = Constant factor for the 50 psig saturated steam
;                  consumption, Mlbs/hr.
;      REAL(34)  = 50 psig saturated steam consumption per Mlbs/hr of
;                  unit feed, (Mlbs/hr)/(Mlbs/hr of unit feed).
;      REAL(35)  = Constant factor for the plant fuel consumption,
;                  MM BTU/hr.
;      REAL(36)  = Plant fuel consumption per Mlbs/hr of unit feed,
;                  (Mlbs/hr)/(Mlbs/hr of unit feed).
;      REAL(37)  = Constant factor for the cooling water consumption,
;                  Mgal/hr.
;      REAL(38)  = Cooling water consumption per Mlbs/hr of unit feed,
;                  (Mlbs/hr)/(Mlbs/hr of unit feed).
;      REAL(39)  = Constant factor for the process water consumption,
;                  Mgal/hr.
;      REAL(40)  = Process water consumption per Mlbs/hr of unit feed,
;                  (Mlbs/hr)/(Mlbs/hr of unit feed).
;      REAL(41)  = Constant factor for the nitrogen consumption,
;                  MM SCF/hr of N2
;      REAL(42)  = Nitrogen consumption per Mlbs/hr of unit feed,
;                  (MM SCF/hr of N2)/(Mlbs/hr of unit feed).
;      REAL(43) -
;       REAL(48) = Future use.
;      REAL(49)  = Constant factor for the number of operators per
;                  day, operators/day.
;      REAL(50)  = Number of operators per day per train,
;                  (operators/day)/train.
;      REAL(51)  = Reference feed rate to a single train in Mlbs/hr of
;                  unit feed for the calculation of the ISBL field cost
;                  of a single train as a function of train capacity.
;      REAL(52)  = Maximum size of a single train as defined by the
;                  unit feed rate in Mlbs/hr of unit feed.
;      REAL(53)  = Minimum size of a single train as defined by the
;                  unit feed rate in Mlbs/hr of unit feed.
;      REAL(54)  = Constant A in the plant ISBL field cost equation.
;      REAL(55)  = Constant B in the plant ISBL field cost equation.
;      REAL(56)  = Constant E in the plant ISBL field cost equation.
;      REAL(57)  = Constant F in the plant ISBL field cost equation.
;      REAL(58)  = Number of spare trains.
;      REAL(59) -
;       REAL(70) = Future use.
;
;  NOTE: The number of operators in this plant and Plant 91 is set so
```

```
;            as to maintain the same total number of operators as used
;            for the baseline design.
;
;          Fraction of URCOAL in feed ending up in solids
    REAL   0.8500914  &
;          Future use (9 items)
           0.0  0.0  0.0  0.0  0.0  0.0  0.0  0.0  0.0        &
;          Future use (10 items)
           0.0  0.0  0.0  0.0  0.0  0.0  0.0  0.0  0.0  0.0   &
;          Power              900/750 F steam    900 satd steam
           0.0 -552.6474      0.0 0.0            0.0 0.0       &
;          600/720 F steam    600 satd steam     150 satd steam
           0.0 0.0            0.0 0.0            0.0 0.0       &
;          50 satd steam      Plant fuel         Cooling H2O
           0.0 0.0            0.0 0.0            0.0 27.99327  &
;          Process H2O        Nitrogen
           0.0 0.06900667     0.0 0.0         &
;          Future Use (6 items)
           0.0  0.0  0.0  0.0  0.0  0.0      &
;          Opers/day    (Opers/day)/train
           0.0          20.0                  &
;          Ref Flow     Max Flow   Min Flow
           368.660      400.0      30.0      &
;          Plant cost equation constants.
;          A      B      E      F      Spares   Future use (2 items)
           0.0    0.0    0.75   1.0    0.0      0.0   0.0    &
;          Future use (10 items)
           0.0  0.0  0.0  0.0  0.0  0.0  0.0  0.0  0.0  0.0
;
;  Set the temperature and pressure of the outlet stream.  These
;  values will override the default values in subroutine USRA6.
   FLASH-SPECS STRM = SA6-01    KODE=2   TEMP = 130.0  PRES = 14.7
;
; Plant 38 - The Ammonia Recovery Plant - use user Fortran block USR38.
BLOCK P38 USER
   SUBROUTINE MODEL = USR38   REPORT = USR38
   DESCRIPTION 'PLANT 38 - THE AMMONIA RECOVERY PLANT'
   PARAM  NINT = 4   NREAL = 70
;      The following 4 integer parameters are:
;      INT(1) = User block summary report control switch.
;               0 => Write the complete user block summary report.
;               1 => Skip the capital cost portion of the summary
;                    report.
;               2 => Skip the capital cost and utilities portions
;                    of the summary report.
;               3 => Skip writing the entire user block summary report.
;      INT(2) = User block summary report destination control switch.
;               0 => Write the user block summary report to the mormal
;                     ASPEN/SP output report file.
;               1 => Write the user block summary report to a separate
;                    user block output report file on logical unit 62
;                    called DCL38.REP.
;      INT(3) = Number of operating duplicate trains, excluding spares.
;               If INT(3) = 0, the minimum number of duplicate
;                 trains will be determined so that the capacity
```

```
;                 of each plant does not exceed the maximum train
;                 capacity specified by variable REAL(52).
;               If INT(3) > 0, the number of duplicate trains.
;     INT(4) = History file additional output control switch.
;               0 => Write no additional output to the history file.
;               1 => Write the only the subroutine entry and exit
;                    messages to the history file.
;               2 => Write some additional output to the history file.
;             3-5 => Write some more additional output to the history
;                    file.  Larger values generate more intermediate
;                    output.
    INT  0  1  0  1
;     The following 70 real parameters are:
;     REAL(1)    = Ammonia recovery, percent.
;     REAL(2)    = Purity of ammonia product, wt %.
;     REAL(3) -
;      REAL(20) = Future use.
;     REAL(21)   = Constant factor for the power consumption, kw.
;     REAL(22)   = Power consumption per Mlbs/hr of NH3 recovered,
;                  kw/(Mlbs/hr of NH3 recovered).
;     REAL(23)   = Constant factor for the 900 psig / 750 F steam
;                  consumption, Mlbs/hr.
;     REAL(24)   = 900 psig / 750 F steam consumption per Mlbs/hr of
;                  NH3 recovered, (Mlbs/hr)/(Mlbs/hr of NH3 recovered).
;     REAL(25)   = Constant factor for the 900 psig saturated steam
;                  consumption, Mlbs/hr.
;     REAL(26)   = 900 psig saturated steam consumption per Mlbs/hr of
;                  NH3 recovered, (Mlbs/hr)/(Mlbs/hr of NH3 recovered).
;     REAL(27)   = Constant factor for the 600 psig / 720 F steam
;                  consumption, Mlbs/hr.
;     REAL(28)   = 600 psig / 720 F steam consumption per Mlbs/hr of
;                  NH3 recovered, (Mlbs/hr)/(Mlbs/hr of NH3 recovered).
;     REAL(29)   = Constant factor for the 600 psig saturated steam
;                  consumption, Mlbs/hr.
;     REAL(30)   = 600 psig saturated steam consumption per Mlbs/hr of
;                  NH3 recovered, (Mlbs/hr)/(Mlbs/hr of NH3 recovered).
;     REAL(31)   = Constant factor for the 150 psig saturated steam
;                  consumption, Mlbs/hr.
;     REAL(32)   = 150 psig saturated steam consumption per Mlbs/hr of
;                  NH3 recovered, (Mlbs/hr)/(Mlbs/hr of NH3 recovered).
;     REAL(33)   = Constant factor for the 50 psig saturated steam
;                  consumption, Mlbs/hr.
;     REAL(34)   = 50 psig saturated steam consumption per Mlbs/hr of
;                  NH3 recovered, (Mlbs/hr)/(Mlbs/hr of NH3 recovered).
;     REAL(35)   = Constant factor for the plant fuel consumption,
;                  MM BTU/hr.
;     REAL(36)   = Plant fuel consumption per Mlbs/hr of NH3 recovered,
;                  (MM BTU/hr)/(Mlbs/hr of NH3 recovered).
;     REAL(37)   = Constant factor for the cooling water consumption,
;                  Mgal/hr.
;     REAL(38)   = Cooling water consumption per Mlbs/hr of NH3
;                  recovered, (Mgal/hr)/(Mlbs/hr of NH3 recovered).
;     REAL(39)   = Constant factor for the process water consumption,
;                  Mgal/hr.
;     REAL(40)   = Process water consumption per Mlbs/hr of NH3
```

```
;                   recovered, (Mgal/hr)/(Mlbs/hr of NH3 recovered).
;      REAL(41)  = Constant factor for the nitrogen consumption,
;                  MM SCF/hr of N2.
;      REAL(42)  = Nitrogen consumption per Mlbs/hr of NH3 recovered,
;                  (MM SCF/hr of N2)/(Mlbs/hr of NH3 recovered).
;      REAL(43) -
;       REAL(48) = Future use.
;      REAL(49)  = Constant factor for the number of operators per
;                  day, operators/day.
;      REAL(50)  = Number of operators per day per operating train,
;                  (operators/day)/train.
;      REAL(51)  = Reference NH3 recovery rate of a single train in
;                  Mlbs/hr for the calculation of the ISBL field cost
;                  of a single train as a function of train capacity.
;      REAL(52)  = Maximum size of a single train as defined by the
;                  NH3 recovery rate in Mlbs/hr of NH3 recovered.
;      REAL(53)  = Minimum size of a single train as defined by the
;                  NH3 recovery rate in Mlbs/hr of NH3 recovered.
;      REAL(54)  = Constant A in the plant ISBL field cost equation.
;      REAL(55)  = Constant B in the plant ISBL field cost equation.
;      REAL(56)  = Constant E in the plant ISBL field cost equation.
;      REAL(57)  = Constant F in the plant ISBL field cost equation.
;      REAL(58)  = Number of spare trains.
;      REAL(59) -
;       REAL(70) = Future use.
;
;         NH3 recovery, %     NH3 purity, wt%
    REAL 99.103              99.552              &
;         Future use (8 items)
          0.0  0.0  0.0  0.0  0.0  0.0  0.0  0.0  &
;         Future use (10 items)
          0.0  0.0  0.0  0.0  0.0  0.0  0.0  0.0  0.0  0.0  &
;         Power              900/750 F steam   900 satd steam
          0.0 75.713367      0.0 0.0           0.0 0.0       &
;         600/720 F steam    600 satd steam    150 satd steam
          0.0  0.0           0.0 16.124425     0.0 28.745809 &
;         50 satd steam      Plant fuel        Cooling  H2O
          0.0 0.0            0.0 0.0           0.0 227.9442  &
;         Process H2O        Nitrogen
          0.0 0.0            0.0 0.0         &
;         Future Use (6 items)
          0.0  0.0  0.0  0.0  0.0  0.0            &
;         Opers/day     (Opers/day)/train
          0.0           20.0                  &
;         Ref Flow   Max Flow   Min Flow
          20.221     100.0      5.0         &
;         Plant cost equation constants.
;         A      B       E      F      Spares   Future Use (3 items)
          0.0    40.1    0.7807 1.0    0.0      0.0   0.0   &
;         Future Use (10 items)
          0.0  0.0  0.0  0.0  0.0  0.0  0.0  0.0  0.0  0.0
;  Set the temperature and pressure of the outlet streams.  These
;  values will override the default values in subroutine USR38.
   FLASH-SPECS STRM = NH3-PROD  KODE=2   TEMP = 80.   PRES = 14.7  /
               STRM = 38S-OUT   KODE=2   TEMP = 80.   PRES = 14.7
```

```
;
;  Component splitter to generate the vapor and liquid streams
;  leaving Plant 38, the ammonia recovery plant.
BLOCK P38A SEP
   FRAC  SUBS = MIXED  STRM = 38AS-VAP                    &
   COMP = H2  N2  O2  H2S  CO  CO2  NH3                   &
          L-SULFUR H2O HCL COS CH4                        &
          C2H6 C3H8 IC4H10 NC4H10 IC5H12 NC5H12           &
          T125  T175  T225  T275  T325                    &
          T375  T425                                      &
          T475  T525  T575  T625  T675                    &
          P125  P175  P225  P275  P325  P375              &
          P425  P475  P525  P575  P625  P675              &
   FRAC = 1.0  1.0  1.0  0.9956  1.0  0.9985  0.07104     &
          0.0  0.002755  1.0  1.0  0.8888889              &
          0.9492 0.9492 0.9492 0.9492 0.9492 0.9492       &
          0.9492 0.9492 0.9492 0.9492 0.9492              &
          0.9492 0.9492                                   &
          0.08481 0.08481 0.08481 0.08481 0.9492          &
          0.9492 0.9492 0.9492 0.9492 0.9492 0.9492       &
          0.9492 0.9492 0.9492 0.9492 0.9492 0.9492
   FLASH-SPECS STRM = 38AS-VAP  TEMP=90.0  PRES=25.0  NPK=1  KPH=1 /
               STRM = 38AS-LIQ  TEMP=90.0  PRES=25.0  NPK=1  KPH=2
;
;  Flow splitter to generate the waste water stream going to the
;  gasifier, Plant 9, and the stream going to the phenol recovery
;  plant, Plant 39.
BLOCK P38B FSPLIT
   FRAC  WASTE  0.28595
   PARAM NPK=1  KPH=2
;
; Plant 39 - The PHENOL RECOVERY PLANT - Use user Fortran block USR39.
BLOCK P39 USER
   SUBROUTINE MODEL = USR39   REPORT = USR39
   DESCRIPTION 'PLANT 39 - THE PHENOL RECOVERY PLANT'
   PARAM  NINT = 4   NREAL = 70
;      The following 4 integer parameters are:
;      INT(1) = User block summary report control switch.
;               0 => Write the complete user block summary report.
;               1 => Skip the capital cost portion of the summary
;                    report.
;               2 => Skip the capital cost and utilities portions
;                    of the summary report.
;               3 => Skip writing the entire user block summary report.
;      INT(2) = User block summary report destination control switch.
;               0 => Write the user block summary report to the mormal
;                     ASPEN/SP output report file.
;               1 => Write the user block summary report to a separate
;                    user block output report file on logical unit 62
;                    called DCL39.REP.
;      INT(3) = Number of operating duplicate trains, excluding spares.
;               If INT(3) = 0, the minimum number of duplicate
;                 trains will be determined so that the capacity
;                 of each plant does not exceed the maximum train
;                 capacity specified by variable REAL(52).
;
```

```
;                If INT(3) > 0, the number of duplicate trains.
;      INT(4) = History file additional output control switch.
;                0 => Write no additional output to the history file.
;                1 => Write the only the subroutine entry and exit
;                     messages to the history file.
;                2 => Write some additional output to the history file.
;              3-5 => Write some more additional output to the history
;                     file.  Larger values generate more intermediate
;                     output.
    INT  0  1  0  1
;      The following 70 real parameters are:
;      REAL(1)    = Phenol recovery, percent.
;      REAL(2)    = Purity of phenol product, wt %.
;      REAL(3) -
;       REAL(20) = Future use.
;      REAL(21)   = Constant factor for the power consumption, kw.
;      REAL(22)   = Power consumption per Mlbs/hr of phenol recovered,
;                   kw/(Mlbs/hr of phenol recovered).
;      REAL(23)   = Constant factor for the 900 psig / 750 F steam
;                   consumption, Mlbs/hr.
;      REAL(24)   = 900 psig / 750 F steam consumption per Mlbs/hr of
;                   phenol recovered, (Mlbs/hr)/(Mlbs/hr of phenol
;                   recovered).
;      REAL(25)   = Constant factor for the 900 psig saturated steam
;                   consumption, Mlbs/hr.
;      REAL(26)   = 900 psig saturated steam consumption per Mlbs/hr of
;                   phenol recovered, (Mlbs/hr)/(Mlbs/hr of phenol
;                   recovered).
;      REAL(27)   = Constant factor for the 600 psig / 720 F steam
;                   consumption, Mlbs/hr.
;      REAL(28)   = 600 psig / 720 F steam consumption per Mlbs/hr of
;                   phenol recovered, (Mlbs/hr)/(Mlbs/hr of phenol
;                   recovered).
;      REAL(29)   = Constant factor for the 600 psig saturated steam
;                   consumption, Mlbs/hr.
;      REAL(30)   = 600 psig saturated steam consumption per Mlbs/hr of
;                   phenol recovered, (Mlbs/hr)/(Mlbs/hr of phenol
;                   recovered).
;      REAL(31)   = Constant factor for the 150 psig saturated steam
;                   consumption, Mlbs/hr.
;      REAL(32)   = 150 psig saturated steam consumption per Mlbs/hr of
;                   phenol recovered, (Mlbs/hr)/(Mlbs/hr of phenol
;                   recovered).
;      REAL(33)   = Constant factor for the 50 psig saturated steam
;                   consumption, Mlbs/hr.
;      REAL(34)   = 50 psig saturated steam consumption per Mlbs/hr of
;                   phenol recovered, (Mlbs/hr)/(Mlbs/hr of phenol
;                   recovered).
;      REAL(35)   = Constant factor for the plant fuel consumption,
;                   MM BTU/hr.
;      REAL(36)   = Plant fuel consumption per Mlbs/hr of phenol
;                   recovered,
;                   (MM BTU/hr)/(Mlbs/hr of phenol recovered).
;      REAL(37)   = Constant factor for the cooling water consumption,
;                   Mgal/hr.
```

```
;       REAL(39)  = Cooling water consumption per Mlbs/hr of phenol
;                   recovered, (Mgal/hr)/(Mlbs/hr of phenol recovered).
;       REAL(39)  = Constant factor for the process water consumption,
;                   Mgal/hr.
;       REAL(40)  = Process water consumption per Mlbs/hr of phenol
;                   recovered, (Mgal/hr)/(Mlbs/hr of phenol recovered).
;       REAL(41)  = Constant factor for the nitrogen consumption,
;                   MM SCF/hr of N2.
;       REAL(42)  = Nitrogen consumption per Mlbs/hr of phenol recovered,
;                   (MM SCF/hr of N2)/(Mlbs/hr of phenol recovered).
;       REAL(43) -
;        REAL(48) = Future use.
;       REAL(49)  = Constant factor for the number of operators per
;                   day, operators/day.
;       REAL(50)  = Number of operators per day per operating train,
;                   (operators/day)/train.
;       REAL(51)  = Reference phenol recovery rate of a single train in
;                   Mlbs/hr for the calculation of the IKSBL field cost
;                   of a single train as a function of train capacity.
;       REAL(52)  = Maximum size of a single train as defined by the
;                   phenol recovery rate in Mlbs/hr of phenol recovered.
;       REAL(53)  = Minimum size of a single train as defined by the
;                   phenol recovery rate in Mlbs/hr of phenol recovered.
;       REAL(54)  = Constant A in the plant ISBL field cost equation.
;       REAL(55)  = Constant B in the plant ISBL field cost equation.
;       REAL(56)  = Constant E in the plant ISBL field cost equation.
;       REAL(57)  = Constant F in the plant ISBL field cost equation.
;       REAL(58)  = Number of spare trains.
;       REAL(59) -
;        REAL(70) = Future use.
;
;     NOTE: In the above, phenol recovered means pure phenol recovered.
;
;          Phenol recovery, %     Phenol purity, wt%
      REAL 97.0089             89.62                &
;          Future use (8 items)
           0.0  0.0  0.0  0.0  0.0  0.0  0.0  0.0  &
;          Future use (10 items)
           0.0  0.0  0.0  0.0  0.0  0.0  0.0  0.0  0.0  0.0  &
;          Power              900/750 F steam   900 satd steam
           0.0 339.16667      0.0 0.0           0.0 0.0       &
;          600/720 F steam    600 satd steam    150 satd steam
           0.0  0.0           0.0 0.0           0.0 9.465     &
;          50 satd steam      Plant fuel        Cooling  H2O
           0.0 25.652917      0.0 0.0           0.0 111.775   &
;          Process H2O        Nitrogen
           0.0 0.0            0.0 0.0         &
;          Future Use (6 items)
           0.0  0.0  0.0  0.0  0.0  0.0      &
;          Opers/day     (Opers/day)/train
           0.0           0.0                 &
;          Ref Flow   Max Flow   Min Flow
           2.4        20.0       1.0        &
;          Plant cost equation constants.
;          A      B       E      F      Spares   Future Use (3 items)
```

```
          0.0    13.3    0.8056 1.0    0.0      0.0   0.0   &
;         Future Use (10 items)
          0.0  0.0  0.0  0.0  0.0  0.0  0.0  0.0  0.0  0.0
;  Set the temperature and pressure of the outlet streams.  These
;  values will override the default values in subroutine USR39.
   FLASH-SPECS STRM = PHENOL   KODE=2   TEMP = 80.   PRES = 14.7  /
               STRM = WASTEH2O KODE=2   TEMP = 80.   PRES = 14.7
;
;  Plant SA6 separates the combined product stream from Plants 31.1
;  and 31.4 into two streams, one for flue gas and another for solids.
;  The separation is set to the URCOAL fraction in the solids stream.
BLOCK SA6 SEP
  FRAC  SUBS=NC    STREAM=FBC-SOL  COMP=URCOAL  FRAC=0.8500914   /
        SUBS=MIXED STREAM=FBC-SOL  COMP=T1000+  FRAC=1.0D-10
;
;  Splitter S1 - The Inlet Coal Splitter.  Used as a switch to divert
;  flow between the three different coal cleaning options, as represented
;  by the three different Coal Cleaning and Preparation Plants:
;  Base Case (1S01), Alternate Case 1 (1S11), and Alternate Case 2 (1S21).
BLOCK S1 FSPLIT
  DESCRIPTION 'INLET ROM COAL SPLITTER - COAL CLEANING SWITCH'
  FRAC  1S01 1.0 / 1S11 0.0 / 1S21 0.0
;
;  Splitter S2 - The Clean Coal Splitter.
BLOCK S2 FSPLIT
  DESCRIPTION 'CLEAN COAL SPLITTER'
  FRAC COALTO14 0.736227
;
;  Splitter S6-SH2O is a component splitter to generate a pseudo
;   sour-water stream from Plant 6 to get the NH3 to Plant 38, the
;   Ammonia Recovery Plant.
BLOCK S6-SH2O SEP
  DESCRIPTION 'SPLITTER TO GENERATE PSEUDO SOUR WATER FROM PLANT 6'
  FRAC  SUBS=MIXED  STREAM=6S-SH2O  COMP=NH3  FRAC=1.0
;
;  Splitter S7 - The Product Naphtha Splitter.  Used as a switch to
;  divert flow between the naphtha reformer, Plant 7 and output to
;  naphtha product.
BLOCK S7 FSPLIT
  DESCRIPTION 'HYDROTREATED NAPHTHA SPLITTER - REFORMER OPTION SWITCH'
;  ==================================================================
;  Use the following line to direct total flow to the reformer, or....
;  FRAC  7-NAPH 1.0
;  Use the following line to direct total flow to the product stream.
  FRAC PNAPHTHA 1.0
;
;  Splitter S8 - The Ash-Concentrate Splitter.  Used as a switch to
;  divert flow between the fluidized bed combustor, Plant 314 and the
;  coal gasification train; Plants M9C, P09, & P10.
BLOCK S8 FSPLIT
  DESCRIPTION 'ASH-CONCENTRATE SPLITTER - FBC OPTION 6 SWITCH'
;  Direct the ash-concentrate flow to coal gasification.
  FRAC  S8-ASHC 1.0
;
;  Splitter S9 - The dummy hydrogen splitter used to switch between
```

```
;  the two hydorgen production alternatives, Plant 9.0/10 - coal
;  gasification, or Plant 9.1 - steam reforming of methane.
BLOCK S9 FSPLIT
  DESCRIPTION 'DUMMY H2 SPLITTER - H2 GENERATION OPTION SWITCH'
;  Set an H2 target flow for Plant 9.0/10 - coal gasification.
  FRAC  H9NEED 1.0
  PARAM   NPK=1  KPH=1
;
; Stream Report Section
; ---------------------
;
STREAM-REPORT P1A
   STREAMS STRM = ROMCOAL 1S-CCOAL 9COAL COALTO14 COALTO2       &
                  14S-XMID 14S-REF 1S-XMID 1S-REFSE             &
                  ASH-CONC S8-ASHC COALTO9 9-FEED SLAG SOLVENT  &
                  2S-BOTTS FBC-FEED SA6-01 FBC-SOL FBC-GAS
   FLOW-FRAC SUBS=MIXED BASES=MASS / SUBS=NC BASES=MASS
   INTENSIVE-PROPS SUBS=MIXED BASES=MASS &
                   PROPS=TEMP PRES MW ENTH ENTR DENS HCAP /
                   SUBS=NC BASES=MASS &
                   PROPS=TEMP PRES MW ENTH DENS
   ATTRIBUTES SUBS=NC COMPONENT
;
STREAM-REPORT P1B
   STREAMS STRM = 1S-WATER 14S-WAT 2-H2OIN 2-H2IN H2MIX 2-H2MIX      &
                  SOLVENT ROSE-XTR 2S-GAS GASES 2S-SH2O              &
                  NAPHTHA GAS-OIL H2-RICH SOUR-GAS P61-GAS           &
                  H2-2RICH SOUR-2GS GAS-OUT NAPHTHA2 3-GAS           &
                  3S-SGAS 3S-FGAS 3S-PROP 3S-BUT 3S-OIL 3S-SH2O      &
                  4-FEED 4-H2IN 4-H2OIN 4S-GAS 4S-NAPH 4S-SH2O       &
                  5S-HPGAS 5S-LPGAS 5-H2IN 5-H2OIN                   &
                  5S-NAPH P350-450 P450-650 P650-850 5S-SH2O         &
                  PS-NAPH PNAPHTHA 7-NAPH 7S-H2 7S-GAS REFORMED      &
                  61-HYD 62-HYD M9H2 M9H4 M9H5 MHNEED                &
                  H9NEED H91NEED                                     &
                  10-AIRIN 10SO1 10SO2 9-O2IN 9-H2OIN 9-STEMIN       &
                  H2-GAS H2S-GAS VENT-GAS 9S-SH2O                    &
                  NAT-GAS STEAM H2-PROD FLUE-GAS                     &
                  6-SGAS 6S-SH2O 11-FEED 11S-FGAS 11S-LIQS 31S-01    &
                  38-FEED NH3-PROD 38S-OUT 38AS-VAP 38AS-LIQ         &
                  WASTE 39FEED PHENOL WASTEH2O
   FLOW-FRAC SUBS=MIXED BASES=MASS
   INTENSIVE-PROPS SUBS=MIXED BASES=MASS &
                   PROPS=TEMP PRES MW ENTH ENTR DENS HCAP
;
;  End of input file OPT8.INP
```

APPENDIX B

APPENDIX B

ASPEN/SP PROCESS SIMULATION MODEL

INPUT FILE FOR THE KINETIC REACTOR MODEL

SIMULATION OF THE IMPROVED BASELINE DESIGN

ASPEN/SP PROCESS SIMULATION MODEL

INPUT FILE FOR THE KINETIC REACTOR MODEL

SIMULATION OF THE IMPROVED BASELINE DESIGN

```
NEW
;
; File T2V2HSV.INP
;
TITLE 'T2V2HSV.INP - KINETIC MODEL SIMULATION OF PLANT 2 REACTORS'
;
DESCRIPTION &
 " ASPEN/SP INPUT FILE FOR SIMULATING THE COAL LIQUEFACTION REACTORS
   IN PLANT 2 WITH THE KINETIC MODEL FOR THE IMPROVED BASELINE DESIGN
   (HIGH SPACE VELOCITY) CASE USING FIXED RECYCLE RATES."
;
;   Last revision - December 22, 1992.
;
;   Prepared under DOE contract no. DE-AC22 90PC89857.
;
IN-UNITS ENG
OUT-UNITS ENG
HISTORY-UNITS ENG
HISTORY
   MSG-LEVEL PROPERTIES=2
;
PROPERTIES SYSOP2/SYSOP4
;
COMPONENTS H2 H2 / N2 N2 / O2 O2 / H2S H2S / CO CO / CO2 CO2 / &
   NH3 H3N / L-SULFUR SULFUR / H2O H2O / HCL HCL / COS COS / &
   CH4 CH4 / C2H6 C2H6 / C3H8 C3H8 / IC4H10 C4H10-2 / &
   NC4H10 C4H10-1 / IC5H12 C5H12-2 / NC5H12 C5H12-1 / &
;  Pseudocomponents
   T125 / T175 / T225 / T275 / T325 / T375 / T425 / T475 / &
   T525 / T575 / T625 / T675 / T725 / T775 / T825 / T875 / &
   T925 / T975 / T1000+ / I1000+ / &
;  Non-conventional components
   COAL / URCOAL / SLAG
;
FORMULA  H2 H2 / N2 N2 / O2 O2 / H2S H2S / CO CO / CO2 CO2 / &
   NH3 H3N / L-SULFUR SULFUR / H2O H2O / HCL HCL / COS COS / &
   CH4 CH4 / C2H6 C2H6 / C3H8 C3H8 / IC4H10 C4H10-2 / &
   NC4H10 C4H10-1 / IC5H12 C5H12-2 / NC5H12 C5H12-1 / &
;
;  PHYSICAL PROPERTY DATA
;=======================
;
PSEUDO-COMPS
  METHOD METCCOAL
;  The following APIs and MWs are revised from the ASPEN/SP predictions.
   COMPONENT T125  TBP=324.82 <K>  API=67.91  MW= 82.27
   COMPONENT T175  TBP=352.59 <K>  API=61.99  MW= 92.77
   COMPONENT T225  TBP=380.37 <K>  API=56.21  MW=102.84
```

```
   COMPONENT T275  TBP=408.15 <K>  API=50.60  MW=112.50
   COMPONENT T325  TBP=435.93 <K>  API=45.18  MW=121.82
   COMPONENT T375  TBP=463.71 <K>  API=39.96  MW=130.86
   COMPONENT T425  TBP=491.48 <K>  API=34.96  MW=139.75
   COMPONENT T475  TBP=519.26 <K>  API=30.19  MW=148.60
   COMPONENT T525  TBP=547.04 <K>  API=25.66  MW=157.54
   COMPONENT T575  TBP=574.82 <K>  API=21.39  MW=166.69
   COMPONENT T625  TBP=602.59 <K>  API=17.38  MW=176.16
   COMPONENT T675  TBP=630.37 <K>  API=13.66  MW=186.05
   COMPONENT T725  TBP=658.15 <K>  API=10.23  MW=196.44
   COMPONENT T775  TBP=685.93 <K>  API= 7.09  MW=207.37
   COMPONENT T825  TBP=713.71 <K>  API= 4.27  MW=218.85
   COMPONENT T875  TBP=741.48 <K>  API= 1.78  MW=230.87
   COMPONENT T925  TBP=769.26 <K>  API=-0.39  MW=243.37
   COMPONENT T975  TBP=797.04 <K>  API=-2.22  MW=256.24
;  Component T1000+ is the 1000+ F material leaving the second coal
;    liquefaction reactor in Plant 2.
   COMPONENT T1000+ TBP=908.15 <K>  API=-5.94  MW=308.05
;  Component I1000+ is the 1000+ F intermediate material leaving the
;    first coal liquefaction reactor in Plant 2.
   COMPONENT I1000+ TBP=908.15<K>  API=-5.94  MW=308.05
;
;
; Load the liquid sulfur (L-SULFUR) physical properties as taken from
; DIPPR - MW adjusted to be consistent with ASPEN.
PROP-DATA  IN-UNITS SI
  PROP-LIST        MW     /   TC    /     PC     /    VC    /   ZC
  PVAL L-SULFUR   32.06 / 1313.0 / 1.8208E+7 / 0.15800 / 0.2640
  PROP-LIST       MUP    /  OMEGA /    TB     /   RGYR
  PVAL L-SULFUR   0.0    / 0.2624 /  717.82   /   0.0
  PROP-LIST         DELTA    /  DGFORM    /  DHFORM
  PVAL L-SULFUR   2.0245E+4 / 2.3825E+8 / 2.7880E+8
  PROP-LIST       CPIG
  PVAL L-SULFUR   2.5639E+4  -7.9870  4.7860E-3  -9.5700E-7  0.0  0.0  &
                  273.15  1500.0  0.0  87.113  1.0
; Load the solubility parameter for COS from the API Tech Data Book.
  PROP-LIST        DELTA
  PVAL COS         18179.
;
; Reset some component molecular weights to be consisitent with the
; following elemental atomic weights, where needed.
; H=1.0079, C=12.011,  O=15.9994,  N=14.0067, S=32.06 & Cl=35.453
;
  PROP-LIST        MW
  PVAL H2          2.0158
  PVAL N2         28.0134
  PVAL O2         31.9988
  PVAL H2S        34.0758
  PVAL CO         28.0104
  PVAL CO2        44.0098
  PVAL NH3        17.0304
  PVAL H2O        18.0152
  PVAL HCL        36.4609
  PVAL COS        60.0704
  PVAL CH4        16.0426
```

```
  PVAL C2H6        30.0694
  PVAL C3H8        44.0962
  PVAL IC4H10      58.1230
  PVAL NC4H10      58.1230
  PVAL IC5H12      72.1498
  PVAL NC5H12      72.1498
;
; Set the specific gravities of H2, NH3 and H2S to the values given
; in the API Technical Data Book - Petroleum Refining.
  PROP-LIST         SPGR
  PVAL H2          0.3000
  PVAL CO          0.3000
  PVAL CO2         0.8180
  PVAL NH3         0.6162
  PVAL H2S         0.8014
  PVAL N2          0.8094
  PVAL COS         1.02
;
ATTR-COMPS COAL   PROXANAL ULTANAL SULFANAL AOXANAL
ATTR-COMPS URCOAL PROXANAL ULTANAL SULFANAL AOXANAL
ATTR-COMPS SLAG   PROXANAL ULTANAL SULFANAL AOXANAL

NC-PROPS   COAL   ENTHALPY  HCJ1BOIE /
                  DENSITY   DCOALIGT
NC-PROPS   URCOAL ENTHALPY  HCJ1BOIE /
                  DENSITY   DCHARIGT
NC-PROPS   SLAG   ENTHALPY  HCJ1BOIE /
                  DENSITY   DCHARIGT
;
DEF-STREAMS MIXNC ALL
;
;  FLOWSHEET
;===========
;
FLOWSHEET MAIN
   BLOCK 2M-101A  IN=2SY1 2SY2              OUT=2SY
   BLOCK 2M-101   IN=1SX 2SY                OUT=2S1
   BLOCK 2M-102H  IN=9SX1 9SX2              OUT=9SX
   BLOCK 2C-103   IN=9SX                    OUT=2S45 2S46
   BLOCK 2M-104   IN=2S46 2S28A             OUT=2S28
   BLOCK 2M-102   IN=2S1 2S45               OUT=2S3
   BLOCK 2L-101   IN=2S3                    OUT=2S4
   BLOCK 2L-102   IN=2S28                   OUT=2S10
   BLOCK 2M-103   IN=2S10 2S4               OUT=2S5
   BLOCK P2RX1    IN=2S5                    OUT=2S6
   BLOCK 2M-107   IN=2S6 2S27               OUT=2S7
   BLOCK P2RX2    IN=2S7                    OUT=2S11
   BLOCK 2C-107   IN=2S11                   OUT=2S12 2S13
   BLOCK 2X107    IN=2S12                   OUT=2S14
   BLOCK 2C-110   IN=2S14                   OUT=2S15 2S16
   BLOCK 2X106    IN=2S15                   OUT=2S191
   BLOCK 2M-110   IN=2S191 2S17             OUT=2S19
   BLOCK 2C-113   IN=2S19                   OUT=2S50 2S21 2S22
   BLOCK 2C-115   IN=2S50                   OUT=2S20 2S51
   BLOCK 2C-108   IN=2S13                   OUT=2S271 2S281
```

```
   BLOCK 2X104    IN=2S271                    OUT=2S29
   BLOCK 2M-106   IN=2S29 2S16                OUT=2S30
   BLOCK 2C-111   IN=2S30                     OUT=2S31 2S32
   BLOCK 2X110    IN=2S31                     OUT=2S33
   BLOCK 2M-108   IN=2S33 2S21                OUT=2S34
   BLOCK 2C-114   IN=2S34                     OUT=2S35 2S36 2S37
   BLOCK 2C-109   IN=2S281                    OUT=2S38 2S39
   BLOCK 2X108    IN=2S38                     OUT=2S41
   BLOCK 2C-112   IN=2S41                     OUT=2S43 2S44 2S42
   BLOCK 2C-105   IN=2S39                     OUT=2S461 2S40
   BLOCK 2M-109   IN=2S36 2S44 2S40 2S32 2S51     OUT=2S451
   BLOCK 2X109    IN=2S451                    OUT=2S452
   BLOCK 2C-200   IN=2S452     OUT=2S200 2S201 2S202 2S203 2S204
   BLOCK 2C-201   IN=2S204                    OUT=2S205 2S206
   BLOCK 2C-202   IN=2S205     OUT=2S211 2S212 2S213 2S214 2S215 2S216
;
;  STREAMS
;=========
;
DEF-STREAMS MIXNC ALL
;
STREAM 2S17
   SUBSTREAM MIXED TEMP=70.0 <F> PRES=2980.0 <PSIA>
   MASS-FLOW H2O 219929.0 <LB/HR>
;
;  MAKE-UP H2
STREAM 9SX1
   SUBSTREAM MIXED TEMP=200.0 <F> PRES=3200.0 <PSIA>
; The following flows are for the improved baseline (high SV) case.
   MASS-FLOW N2 308 <LB/HR> / H2 22012 <LB/HR> / H2O 1 <LB/HR> / &
            H2S 1 <LB/HR> / NH3 1 <LB/HR> / CO 1 <LB/HR> / &
            CO2 1 <LB/HR> / CH4 1 <LB/HR> / C2H6 1 <LB/HR> / &
            C3H8 1 <LB/HR> / NC4H10 1 <LB/HR> / &
            NC5H12 1 <LB/HR>
;
;  FIRST REACTOR (STAGE I) TREATED RECYCLE GAS
STREAM 9SX2
   SUBSTREAM MIXED TEMP=200.0 <F> PRES=3200.0 <PSIA>
; The following flows are for the improved baseline (high SV) case.
   MASS-FLOW N2 69 <LB/HR> / H2 4037 <LB/HR> / H2O 13 <LB/HR> / &
            H2S 0 <LB/HR> / NH3 0 <LB/HR> / CO 75 <LB/HR> / &
            CO2 0 <LB/HR> / CH4 1366 <LB/HR> / C2H6 619 <LB/HR> / &
            C3H8 379 <LB/HR> / NC4H10 131 <LB/HR> / &
            NC5H12 212 <LB/HR>
;
; FIRST REACTOR (STAGE I) UNTREATED RECYCLE GAS
STREAM 2S28A
   SUBSTREAM MIXED TEMP=100.0 <F> PRES=3200.0 <PSIA>
; The following flows are for the improved baseline (high SV) case.
   MASS-FLOW N2 357 <LB/HR> / H2 4000 <LB/HR> / H2O 32.7 <LB/HR> / &
            H2S 734.4 <LB/HR> / NH3 1.6 <LB/HR> / CO 390.5 <LB/HR> / &
            CO2 38.9 <LB/HR> / CH4 6077 <LB/HR> / C2H6 3172.4 <LB/HR> / &
            C3H8 1940.1 <LB/HR> / NC4H10 667.4 <LB/HR> / &
            NC5H12 1101.8 <LB/HR>
;
```

```
; SECOND REACTOR (STAGE II) UNTREATED RECYCLE GAS
STREAM 2S27
   SUBSTREAM MIXED TEMP=100.0 <F> PRES=3200.0 <PSIA>
; The following flows are for the improved baseline (high SV) case.
   MASS-FLOW N2 1433 <LB/HR> / H2 16048 <LB/HR> / H2O 131.3 <LB/HR> / &
             H2S 2946.6 <LB/HR> / NH3 6.4 <LB/HR> / CO 1566.5 <LB/HR> / &
             CO2 156.1 <LB/HR> / CH4 24381 <LB/HR> / C2H6 12727.6 <LB/HR> /
&
             C3H8 7783.9 <LB/HR> / NC4H10 2677.6 <LB/HR> / &
             NC5H12 4420.2 <LB/HR>
;
STREAM 2SY1
   SUBSTREAM MIXED TEMP=400.0 <F> PRES=3200.0 <PSIA>
;  CONVENTIONAL COMPONENTS:
; The following flows are for the improved baseline (high SV) case.
   MASS-FLOW H2O 27 <LB/HR> / NH3 0.1 <LB/HR> / C3H8 0.1 <LB/HR> /
         CH4 0.1 <LB/HR> / NC4H10 0.1 <LB/HR> / H2S 0.1 <LB/HR> /
         CO 0.1 <LB/HR> / IC4H10 0.1 <LB/HR> / NC5H12 0.1 <LB/HR> /
         CO2 0.1 <LB/HR> / IC5H12 0.1 <LB/HR> / H2 0.1 <LB/HR> /
         C2H6 0.1 <LB/HR> /
;  PSEUDOCOMPONENTS:
         T125 138.8 <LB/HR> / T175 138.8 <LB/HR> / T225 138.8 <LB/HR> /
         T275 138.8 <LB/HR> / T325 138.8 <LB/HR> / T375 795.0 <LB/HR> /
         T425 795.0 <LB/HR> / T475 7070.75 <LB/HR> / T525 7070.75 <LB/HR> /
         T575 7070.75 <LB/HR> / T625 7070.75 <LB/HR> / T675 30640.3 <LB/HR>
/
         T725 30640.3 <LB/HR> / T775 30640.2 <LB/HR> / T825 30640.2 <LB/HR>
/
         T875 46719.7 <LB/HR> / T925 46719.7 <LB/HR> / T975 46719.7 <LB/HR>
/
         T1000+ 388250 <LB/HR>
; total liquid-phase solvent is 775594.3
;
STREAM 2SY2
;  NON-CONVENTIONAL COMPONENTS:
   SUBSTREAM NC TEMP=400.0 <F> PRES=3023.0 <PSIA>
; The following flows are for the improved baseline (high SV) case.
   MASS-FLOW URCOAL 94029 <LB/HR>
   COMP-ATTR URCOAL PROXANAL (0.0 19.199 16.547 64.254) /
                    ULTANAL (61.830 30.688 2.362 0.577 0.0 1.292 3.250) /
;                         wt%   ash, C    ,   H   ,  N  , Cl, S ,   O
                    SULFANAL (0.760 0.076 0.456) /
                    AOXANAL  (43.8 17.1 24.1 0.8 0.1 5.6 1.0 0.6 2.1 4.1)
   COMP-ATTR SLAG PROXANAL (0.0 10.0 0.0 90.0) /
                    ULTANAL (90.0 10.0 0.0 0.0 0.0 0.0 0.0 ) /
                    SULFANAL (0.0 0.0 0.0) /
                    AOXANAL  (42.0 17.0 23.0 1. 1. 6. 2. 1. 3. 4.)
;
STREAM 1SX
   SUBSTREAM MIXED TEMP=200.0 <F> PRES=3023.0 <PSIA>
;  MASS-FLOW H2O 5817.
   MASS-FLOW H2O 7926.
;  NON-CONVENTIONAL COMPONENTS:
   SUBSTREAM NC TEMP=200.0 <F> PRES=3023.0 <PSIA>
; The following flows are for the improved baseline (high SV) case.
```

```
      MASS-FLOW  COAL  388356.0
      COMP-ATTR COAL PROXANAL (0.0 47.55 40.99 11.47) /
                     ULTANAL (11.473 71.047 4.80 1.43 0.00 3.20 8.05) /
                     SULFANAL (1.88 0.19 1.13) /
                     AOXANAL (43.8 17.1 24.1 0.8 0.1 5.6 1.0 0.6 2.1 4.1)
;
FORTRAN SOLVENT
 DEFINE SOLV STREAM-VAR STREAM=2SY1 VARIABLE=MASS-FLOW
 DEFINE URC MASS-FLOW STREAM=2SY2 SUBSTREAM=NC COMPONENT=URCOAL
C     Set the weight ratio of unconverted coal (URCOAL) to solvent in
C     the solvent recycle stream.
C     For the improved baseline (high SV) case.
F        URC = 0.12123*SOLV
   EXECUTE BEFORE 2M-101A
;
;  UNIT OPERATION BLOCKS
;=======================
;
BLOCK 2M-101A MIXER
  PROPERTIES SYSOP4
  PARAM PRES=-1.0
;
BLOCK 2M-101 MIXER
  PROPERTIES SYSOP4
  PARAM PRES=-1.0
;
BLOCK 2M-102H MIXER
  PROPERTIES SYSOP4
  PARAM PRES=-1.0
;
BLOCK 2C-103 FSPLIT
  PROPERTIES SYSOP4
  FRAC 2S45 0.05
;
BLOCK 2M-102 MIXER
  PROPERTIES SYSOP4
  PARAM PRES=-1.0
;
BLOCK 2M-104 MIXER
  PROPERTIES SYSOP4
  PARAM PRES=-1.0
;
BLOCK 2L-101 HEATER
  PROPERTIES SYSOP4
  PARAM TEMP=570 <F> PRES=3115.0 <PSIA>
;
BLOCK 2L-102 HEATER
  PROPERTIES SYSOP4
  PARAM TEMP=1050 <F> PRES=3070.0 <PSIA>
;
BLOCK 2M-103 MIXER
  PROPERTIES SYSOP4
  PARAM PRES=-5.0
;
;  Plant P2RX1 is the model for the first coal liquefaction reactor.
```

```
;    Stream 2S5 is the feed stream to the first Plant 2 coal
;      liquefaction reactor.
;    Stream 2S6 is the total reactor effluent from the first
;      Plant 2 coal liquefaction reactor.
;
; Plant 2 - The first coal liquefaction reactor - Fortran block USR2R.
BLOCK  P2RX1  USER
  PROPERTIES SYSOP4
   SUBROUTINE MODEL = USR2R   REPORT = USR2R
   DESCRIPTION 'PLANT 2 - COAL LIQUEFACTION REACTORS MODEL'
   PARAM  NINT = 5   NREAL = 20
;      The following 5 integer parameters are:
;      INT(1) = User block summary report control switch.
;               0 => Write the complete user block summary report.
;               1 => Skip the capital cost portion of the summary
;                    report.
;               2 => Skip the capital cost and utilities portions
;                    of the summary report.
;               3 => Skip writing the entire user block summary report.
;      INT(2) = User block summary report destination control switch.
;               0 => Write the user block summary report to the normal
;                    ASPEN/SP output report file.
;               1 => Write the user block summary report to a separate
;                    user block output report file on logical unit 62
;                    called DCL02.REP.
;      INT(3) = Number of duplicate plants.  NOT APPLICABLE.
;      INT(4) = History file additional output control switch.
;               0 => Write no additional output to the history file.
;               1 => Write the only the subroutine entry and exit
;                    messages to the history file.
;               2 => Write some additional output to the history file.
;             3-5 => Write some more additional output to the history
;                    file.  Larger values generate more intermediate
;                    output.
;      INT(5) = Yields factor calculation switch
;               2 => Yields calculated in subroutine USR2R via a
;                    linear model for both coal liquefaction reactors.
;               3 => Called by subroutine USRR1
;               4 => Called by subroutine USRR2
;               5 => Yields calculated in subroutine USR2R via a
;                    kinetic model for both liquefaction reactors.
;                    Exact transfer of Lotus spreadsheet
;               6 => Yields calculated in subroutine USR2R via a
;                    kinetic model for first stage reactor system
;                    only.Call this model P2RX1.
;               7 => Yields calculated in subroutine USR2R via
;                    a kinetic model for second stage reactor.
;                    It is assumed that input to this are yields
;                    from P2RX1 plus recycle stream 2S27.
;                    Call this P2RX2.
    INT  0  1  0  4  6
;      The following 20 real parameters are:
;      REAL(1)    = Percent coal conversion based on fresh MAF coal
;                   entering the coal liquefaction reactors.
;      REAL(2)    = Future use.
```

```
;       REAL(3)    = RESID YIELD IN REACTOR I, %MAF
;       REAL(4)    = OVERALL UNCONVERTED COAL, %MAF
;       REAL(5)    = RESID LOSS IN ROSE, %MAF
;       REAL(6)    = COAL SV, LB MAF COAL/HR/LB CATALYST
;       REAL(7)    = FIXED CARBON, WT% MF
;       REAL(8)    = REACTOR ID STAGE I AND II, FEET
;       REAL(9)    = MAXIMUM REACTOR WEIGHT,1 322 SHORT TONS
;       REAL(10)   = REACTOR I, TEMP DEG F
;       REAL(11)   = REACTOR II, TEMP DEG F
;       REAL(12)   = STAGE I OUTLET PRESSURE, PSIA
;       REAL(13)   = STAGE II OUTLET PRESSURE, PSIA
;       REAL(14)   = MAXIMUM GAS VELOCITY, FPS
;       REAL(15)   = Unconverted coal, stage 1 % MAF
;       REAL(16)   -
;        REAL(20) = Future use.
;
;   The following are for the improved baseline (high SV) case for
;   the Stage I reactor.
     REAL 92.7901  &
          0.0 27.00 7.10 8.13 1.95 50.68 15.0 1322.0 810.0  &
          760.0 3040.0 3010.0 0.197 10.2 0.0 0.0 0.0 0.0 0.0
;  Use the following FLASH-SPECS sentence to force ASPEN/SP to flash
;  the reactor effluent stream.
   FLASH-SPECS STRM = 2S6      KODE=2
;
;
BLOCK 2M-107 MIXER
  PROPERTIES SYSOP4
  PARAM PRES=-5.0
;
;
;  Plant P2RX2 is the model for the second coal liquefaction reactor.
;    Stream 2S7 is the feed stream to the second Plant 2 coal
;      liquefaction reactor.
;    Stream 2S11 is the total reactor effluent from the second
;      coal liquefaction reactor.
;
; Plant 2 - The second coal liquefaction reactor - Fortran block USR2R.
BLOCK  P2RX2  USER
  PROPERTIES SYSOP4
   SUBROUTINE MODEL = USR2R   REPORT = USR2R
   DESCRIPTION 'PLANT 2 - COAL LIQUEFACTION REACTORS MODEL'
   PARAM  NINT = 5   NREAL = 20
;       The following 5 integer parameters are:
;       INT(1) = User block summary report control switch.
;                0 => Write the complete user block summary report.
;                1 => Skip the capital cost portion of the summary
;                     report.
;                2 => Skip the capital cost and utilities portions
;                     of the summary report.
;                3 => Skip writing the entire user block summary report.
;       INT(2) = User block summary report destination control switch.
;                0 => Write the user block summary report to the normal
;                     ASPEN/SP output report file.
;                1 => Write the user block summary report to a separate
;
```

```
;                    user block output report file on logical unit 62
;                    called DCL02.REP.
;      INT(3) = Number of duplicate plants.  NOT APPLICABLE.
;      INT(4) = History file additional output control switch.
;               0 => Write no additional output to the history file.
;               1 => Write the only the subroutine entry and exit
;                    messages to the history file.
;               2 => Write some additional output to the history file.
;             3-5 => Write some more additional output to the history
;                    file.  Larger values generate more intermediate
;                    output.
;      INT(5) = Yields factor calculation switch
;               2 => Yields calculated in subroutine USR2R via a
;                    linear model for both coal liquefaction reactors.
;               3 => Called by subroutine USRR1
;               4 => Called by subroutine USRR2
;               5 => Yields calculated in subroutine USR2R via a
;                    kinetic model for both liquefaction reactors.
;                    Exact transfer of Lotus spreadsheet
;               6 => Yields calculated in subroutine USR2R via a
;                    kinetic model for first stage reactor system
;                    only.Call this model P2RX1.
;               7 => Yields calculated in subroutine USR2R via
;                    a kinetic model for second stage reactor.
;                    It is assumed that input to this are yields
;                    from P2RX1 plus recycle stream 2S27.
;                    Call this P2RX2.
    INT  0  1  0  4  7
;      The following 20 real parameters are:
;      REAL(1)   = Percent coal conversion based on fresh MAF coal
;                  entering the coal liquefaction reactors.
;      REAL(2)   = Future use.
;      REAL(3)   = RESID YIELD IN REACTOR I, %MAF
;      REAL(4)   = OVERALL UNCONVERTED COAL, %MAF
;      REAL(5)   = RESID LOSS IN ROSE, %MAF
;      REAL(6)   = COAL SV, LB MAF COAL/HR/LB CATALYST
;      REAL(7)   = FIXED CARBON, WT% MF
;      REAL(8)   = REACTOR ID STAGE I AND II, FEET
;      REAL(9)   = MAXIMUM REACTOR WEIGHT,1 322 SHORT TONS
;      REAL(10)  = REACTOR I, TEMP DEG F
;      REAL(11)  = REACTOR II, TEMP DEG F
;      REAL(12)  = STAGE I OUTLET PRESSURE, PSIA
;      REAL(13)  = STAGE II OUTLET PRESSURE, PSIA
;      REAL(14)  = MAXIMUM GAS VELOCITY, FPS
;      REAL(15)  = Unconverted coal, stage 1 % MAF
;      REAL(16)  -
;       REAL(20) = Future use.
;
;   The following are for the improved baseline (high SV) case for
;   the Stage II reactor.
     REAL 92.7901  &
          0.0 27.00 7.10 8.13 1.95 50.68 15.0 1322.0 810.0  &
          760.0 3040.0 3010.0 0.197 10.2 0.0 0.0 0.0 0.0 0.0
;  Use the following FLASH-SPECS sentence to force ASPEN/SP to flash
;  the reactor effluent stream.
```

```
   FLASH-SPECS STRM = 2S11      KODE=2
;
BLOCK 2C-107 FLASH2
   PROPERTIES SYSOP4
   PARAM TEMP=760. <F> PRES=3015. <PSIA>
;
BLOCK 2X107 HEATER
   PARAM TEMP=550. <F> PRES=-10.0
;
BLOCK 2C-110 FLASH2
   PARAM TEMP=400. <F> PRES=3015. <PSIA>
;
BLOCK 2X106 HEATER
   PARAM TEMP=130. <F>  PRES=2995.0 <PSIA>
;
BLOCK 2C-113 FLASH3
   PROPERTIES SYSOP4
   PARAM TEMP=130. <F> PRES=2985. <PSIA>
;
BLOCK 2C-115 SEP
   FLASH-SPECS  STRM=2S51 TEMP=130.0 <F> PRES=2985.0 <PSIA>  /
                STRM=2S20 TEMP=130.0 <F> PRES=2985.0 <PSIA>
   FRAC SUBS=MIXED STRM=2S20                                          &
        COMP=H2      N2        O2        H2S       CO        CO2      &
             NH3     L-SULFUR  H2O       HCL       COS       CH4      &
             C2H6    C3H8      IC4H10    NC4H10    IC5H12    NC5H12   &
;  Pseudocomponents
             T125    T175      T225      T275      T325      T375     &
             T425    T475      T525      T575      T625      T675     &
             T725    T775      T825      T875      T925      T1000+   &
             I1000+                                                   &
        FRAC=1.0     1.0       1.0       1.0       1.0       1.0      &
             1.0     1.0       0.30      0.05      1.0       1.0      &
             1.0     1.0       0.5       0.8       0.3       0.3      &
;  Pseudocomponents
             0.0     0.0       0.0       0.0       0.0       0.0      &
             0.0     0.0       0.0       0.0       0.0       0.0      &
             0.0     0.0       0.0       0.0       0.0       0.0      &
             0.0                                                      /
        STRM=2S51                                                     &
        COMP=H2      N2        O2        H2S       CO        CO2      &
             NH3     L-SULFUR  H2O       HCL       COS       CH4      &
             C2H6    C3H8      IC4H10    NC4H10    IC5H12    NC5H12   &
;  Pseudocomponents
             T125    T175      T225      T275      T325      T375     &
             T425    T475      T525      T575      T625      T675     &
             T725    T775      T825      T875      T925      T1000+   &
             I1000+                                                   &
        FRAC=0.0     0.0       0.0       0.0       0.0       0.0      &
             0.0     0.0       0.70      0.95      0.0       0.0      &
             0.0     0.0       0.5       0.2       0.7       0.7      &
;  Pseudocomponents
             1.0     1.0       1.0       1.0       1.0       1.0      &
             1.0     1.0       1.0       1.0       1.0       1.0      &
             1.0     1.0       1.0       1.0       1.0       1.0      &
```

```
            1.0
;
BLOCK 2C-108 FLASH2
  PARAM TEMP=745. <F> PRES=115. <PSIA>
;
BLOCK 2X104 HEATER
   PARAM TEMP=550. <F> PRES=105.0 <PSIA>
;
BLOCK 2M-106 MIXER
  PARAM PRES=-1.0
;
BLOCK 2C-111 FLASH2
   PROPERTIES SYSOP4
  PARAM TEMP=550. <F> PRES=80. <PSIA>
;
BLOCK 2X110 HEATER
  PARAM TEMP=130. <F> PRES=70.0 <PSIA>
;
BLOCK 2M-109 MIXER
  PARAM PRES=-1.0
;
BLOCK 2M-108 MIXER
  PARAM PRES=-1.0
;
BLOCK 2C-114 FLASH3
   PROPERTIES SYSOP4
  PARAM TEMP=125. <F> PRES=65. <PSIA>
;
BLOCK 2C-109 FLASH2
 PARAM TEMP=743. <F> PRES=35. <PSIA>
;
BLOCK 2X108 HEATER
  PARAM TEMP=130. <F> PRES=25.0 <PSIA>
;
BLOCK 2C-112 FLASH3
  PARAM TEMP=130. <F> PRES=25. <PSIA>
;
BLOCK 2C-105 FSPLIT
   FRAC 2S461 0.43
;
BLOCK 2M-110 MIXER
  PARAM PRES=-1.0
;
BLOCK 2X109 HEATER
  PARAM TEMP=748.0 <F> PRES=115.0 <PSIA>
;
BLOCK 2C-200 SEP
   FLASH-SPECS  STRM=2S200 TEMP=140.0 <F> PRES=16.0 <PSIA>  /
                STRM=2S201 TEMP=140.0 <F> PRES=16.0 <PSIA>  /
                STRM=2S202 TEMP=140.0 <F> PRES=16.0 <PSIA>  /
                STRM=2S203 TEMP=140.0 <F> PRES=28.0 <PSIA>  /
                STRM=2S204 TEMP=695.0 <F> PRES=28.0 <PSIA>
   FRAC SUBS=MIXED STRM=2S200                                        &
        COMP=H2      N2        O2      H2S       CO      CO2         &
             NH3     L-SULFUR  H2O     HCL       COS     CH4         &
```

```
            C2H6     C3H8      IC4H10   NC4H10    IC5H12   NC5H12     &
;  Pseudocomponents
            T125     T175      T225     T275      T325     T375       &
            T425     T475      T525     T575      T625     T675       &
            T725     T775      T825     T875      T925     T975       &
            T1000+   I1000+                                            &
       FRAC=1.0      1.0       1.0      0.0       1.0      1.0        &
            0.1      0.0       0.05     0.0       1.0      0.0        &
            0.0      0.0       0.0      0.0       0.0      0.0        &
;  Pseudocomponents
            0.0      0.0       0.0      0.0       0.0      0.0        &
            0.0      0.0       0.0      0.0       0.0      0.0        &
            0.0      0.0       0.0      0.0       0.0      0.0        &
            0.0      0.0                                              /
       STRM=2S201                                                    &
       COMP=H2       N2        O2       H2S       CO       CO2        &
            NH3      L-SULFUR  H2O      HCL       COS      CH4        &
            C2H6     C3H8      IC4H10   NC4H10    IC5H12   NC5H12     &
;  Pseudocomponents
            T125     T175      T225     T275      T325     T375       &
            T425     T475      T525     T575      T625     T675       &
            T725     T775      T825     T875      T925     T975       &
            T1000+   I1000+                                            &
       FRAC=1.0      1.0       1.0      0.1       1.0      1.0        &
            0.9      1.0       0.95     1.0       1.0      1.0        &
            0.0      0.0       0.0      0.0       0.0      0.0        &
;  Pseudocomponents
            0.0      0.0       0.0      0.0       0.0      0.0        &
            0.0      0.0       0.0      0.0       0.0      0.0        &
            0.0      0.0       0.0      0.0       0.0      0.0        &
            0.0      0.0                                              /
       STRM=2S202                                                    &
       COMP=H2       N2        O2       H2S       CO       CO2        &
            NH3      L-SULFUR  H2O      HCL       COS      CH4        &
            C2H6     C3H8      IC4H10   NC4H10    IC5H12   NC5H12     &
;  Pseudocomponents
            T125     T175      T225     T275      T325     T375       &
            T425     T475      T525     T575      T625     T675       &
            T725     T775      T825     T875      T925     T975       &
            T1000+   I1000+                                            &
       FRAC=0.0      0.0       0.0      0.9       0.0      0.0        &
            0.0      0.0       0.0      0.0       0.0      1.0        &
            1.0      1.0       1.0      1.0       1.0      1.0        &
;  Pseudocomponents
            0.94     0.94      0.94     0.94      0.94     0.035      &
            0.035    0.0       0.0      0.0       0.0      0.0        &
            0.0      0.0       0.0      0.0       0.0      0.0        &
            0.0      0.0                                              /
       STRM=2S203                                                    &
       COMP=H2       N2        O2       H2S       CO       CO2        &
            NH3      L-SULFUR  H2O      HCL       COS      CH4        &
            C2H6     C3H8      IC4H10   NC4H10    IC5H12   NC5H12     &
;  Pseudocomponents
            T125     T175      T225     T275      T325     T375       &
            T425     T475      T525     T575      T625     T675       &
```

```
            T725     T775      T825     T875      T925     T975        &
            T1000+   I1000+                                             &
        FRAC=0.0     0.0       0.0      0.0       0.0      0.0         &
            0.0      0.0       0.0      0.0       0.0      0.0         &
            0.0      0.0       0.0      0.0       0.0      0.0         &
;   Pseudocomponents
            0.034    0.034     0.034    0.034     0.034    0.815       &
            0.815    0.404     0.404    0.404     0.404    0.096       &
            0.096    0.096     0.096    0.007     0.007    0.007       &
            0.0      0.0                                                /
        STRM=2S204                                                     &
        COMP=H2      N2        O2       H2S       CO       CO2         &
            NH3      L-SULFUR  H2O      HCL       COS      CH4         &
            C2H6     C3H8      IC4H10   NC4H10    IC5H12   NC5H12      &
;   Pseudocomponents
            T125     T175      T225     T275      T325     T375        &
            T425     T475      T525     T575      T625     T675        &
            T725     T775      T825     T875      T925     T975        &
            T1000+   I1000+                                             &
        FRAC=0.0     0.0       0.0      0.0       0.0      0.0         &
            0.0      0.0       0.0      0.0       0.0      0.0         &
            0.0      0.0       0.0      0.0       0.0      0.0         &
;   Pseudocomponents
            0.026    0.026     0.026    0.026     0.026    0.150       &
            0.150    0.596     0.596    0.596     0.596    0.904       &
            0.904    0.904     0.904    0.993     0.993    0.993       &
            1.0      1.0
;   Non-conventional components
    FRAC SUBS=NC STRM=2S200                                            &
        COMP=COAL    URCOAL    SLAG                                    &
        FRAC=0.0      0.0       0.0                                    /
        STRM=2S201                                                     &
        COMP=COAL    URCOAL    SLAG                                    &
        FRAC=0.0      0.0       0.0                                    /
        STRM=2S202                                                     &
        COMP=COAL    URCOAL    SLAG                                    &
        FRAC=0.0      0.0       0.0                                    /
        STRM=2S203                                                     &
        COMP=COAL    URCOAL    SLAG                                    &
        FRAC=0.0      0.0       0.0                                    /
        STRM=2S204                                                     &
        COMP=COAL    URCOAL    SLAG                                    &
        FRAC=1.0      1.0       1.0
;
BLOCK 2C-201 FSPLIT
    FRAC 2S205 0.72
;
BLOCK 2C-202 SEP
    FLASH-SPECS  STRM=2S211 TEMP=110.0 <F> PRES=16.7 <PSIA>  /
                 STRM=2S212 TEMP=110.0 <F> PRES=16.7 <PSIA>  /
                 STRM=2S213 TEMP=110.0 <F> PRES=16.7 <PSIA>  /
                 STRM=2S214 TEMP=266.0 <F> PRES=16.7 <PSIA>  /
                 STRM=2S215 TEMP=400.0 <F> PRES=16.7 <PSIA>  /
                 STRM=2S216 TEMP=688.0 <F> PRES=50.0 <PSIA>
    FRAC SUBS=MIXED STRM=2S211                                         &
```

```
        COMP=H2      N2         O2       H2S      CO       CO2      &
             NH3     L-SULFUR   H2O      HCL      COS      CH4      &
             C2H6    C3H8       IC4H10   NC4H10   IC5H12   NC5H12   &
;  Pseudocomponents
             T125    T175       T225     T275     T325     T375     &
             T425    T475       T525     T575     T625     T675     &
             T725    T775       T825     T875     T925     T975     &
             T1000+  I1000+                                          &
        FRAC=1.0     1.0        1.0      0.9      1.0      1.0      &
             0.1     0.0        0.05     0.0      1.0      1.0      &
             1.0     1.0        1.0      1.0      0.0      0.0      &
;  Pseudocomponents
             0.0     0.0        0.0      0.0      0.0      0.0      &
             0.0     0.0        0.0      0.0      0.0      0.0      &
             0.0     0.0        0.0      0.0      0.0      0.0      &
             0.0     0.0                                             /
        STRM=2S212                                                   &
        COMP=H2      N2         O2       H2S      CO       CO2      &
             NH3     L-SULFUR   H2O      HCL      COS      CH4      &
             C2H6    C3H8       IC4H10   NC4H10   IC5H12   NC5H12   &
;  Pseudocomponents
             T125    T175       T225     T275     T325     T375     &
             T425    T475       T525     T575     T625     T675     &
             T725    T775       T825     T875     T925     T975     &
             T1000+  I1000+                                          &
        FRAC=0.0     0.0        0.0      0.1      0.0      0.0      &
             0.9     0.0        0.95     0.0      0.0      0.0      &
             0.0     0.0        0.0      0.0      0.0      0.0      &
;  Pseudocomponents
             0.0     0.0        0.0      0.0      0.0      0.0      &
             0.0     0.0        0.0      0.0      0.0      0.0      &
             0.0     0.0        0.0      0.0      0.0      0.0      &
             0.0     0.0                                             /
        STRM=2S213                                                   &
        COMP=H2      N2         O2       H2S      CO       CO2      &
             NH3     L-SULFUR   H2O      HCL      COS      CH4      &
             C2H6    C3H8       IC4H10   NC4H10   IC5H12   NC5H12   &
;  Pseudocomponents
             T125    T175       T225     T275     T325     T375     &
             T425    T475       T525     T575     T625     T675     &
             T725    T775       T825     T875     T925     T975     &
             T1000+  I1000+                                          &
        FRAC=0.0     0.0        0.0      0.0      0.0      0.0      &
             0.0     0.0        0.0      0.0      0.0      0.0      &
             0.0     0.0        0.0      0.0      1.0      1.0      &
;  Pseudocomponents
             0.545   0.545      0.545    0.545    0.545    0.068    &
             0.068   0.0        0.0      0.0      0.0      0.0      &
             0.0     0.0        0.0      0.0      0.0      0.0      &
             0.0     0.0                                             /
        STRM=2S214                                                   &
        COMP=H2      N2         O2       H2S      CO       CO2      &
             NH3     L-SULFUR   H2O      HCL      COS      CH4      &
             C2H6    C3H8       IC4H10   NC4H10   IC5H12   NC5H12   &
;  Pseudocomponents
```

```
            T125     T175      T225     T275      T325     T375      &
            T425     T475      T525     T575      T625     T675      &
            T725     T775      T825     T875      T925     T975      &
            T1000+   I1000+                                           &
       FRAC=0.0      0.0       0.0      0.0       0.0      0.0       &
            0.0      0.0       0.0      0.0       0.0      0.0       &
            0.0      0.0       0.0      0.0       0.0      0.0       &
;  Pseudocomponents
            0.455    0.455     0.455    0.455     0.455    0.932     &
            0.932    1.0       1.0      1.0       1.0      0.883     &
            0.883    0.883     0.883    0.026     0.026    0.026     &
            0.0      0.0                                             /
       STRM=2S215                                                    &
       COMP=H2       N2        O2       H2S       CO       CO2       &
            NH3      L-SULFUR  H2O      HCL       COS      CH4       &
            C2H6     C3H8      IC4H10   NC4H10    IC5H12   NC5H12    &
;  Pseudocomponents
            T125     T175      T225     T275      T325     T375      &
            T425     T475      T525     T575      T625     T675      &
            T725     T775      T825     T875      T925     T975      &
            T1000+   I1000+                                           &
       FRAC=0.0      0.0       0.0      0.0       0.0      0.0       &
            0.0      0.0       0.0      0.0       0.0      0.0       &
            0.0      0.0       0.0      0.0       0.0      0.0       &
;  Pseudocomponents
            0.0      0.0       0.0      0.0       0.0      0.0       &
            0.0      0.0       0.0      0.0       0.0      0.08      &
            0.08     0.08      0.08     0.533     0.533    0.533     &
            0.0136   0.0                                             /
       STRM=2S216                                                    &
       COMP=H2       N2        O2       H2S       CO       CO2       &
            NH3      L-SULFUR  H2O      HCL       COS      CH4       &
            C2H6     C3H8      IC4H10   NC4H10    IC5H12   NC5H12    &
;  Pseudocomponents
            T125     T175      T225     T275      T325     T375      &
            T425     T475      T525     T575      T625     T675      &
            T725     T775      T825     T875      T925     T975      &
            T1000+   I1000+                                           &
       FRAC=0.0      0.0       0.0      0.0       0.0      0.0       &
            0.0      0.0       0.0      0.0       0.0      0.0       &
            0.0      0.0       0.0      0.0       0.0      0.0       &
;  Pseudocomponents
            0.0      0.0       0.0      0.0       0.0      0.0       &
            0.0      0.0       0.0      0.0       0.0      0.037     &
            0.037    0.037     0.037    0.441     0.441    0.441     &
            0.9864   0.0
;  Non-conventional components
   FRAC SUBS=NC STRM=2S211                                           &
       COMP=COAL    URCOAL    SLAG                                   &
       FRAC=0.0      0.0       0.0                                   /
       STRM=2S212                                                    &
       COMP=COAL    URCOAL    SLAG                                   &
       FRAC=0.0      0.0       0.0                                   /
       STRM=2S213                                                    &
       COMP=COAL    URCOAL    SLAG                                   &
```

```
        FRAC=0.0     0.0       0.0                                    /
        STRM=2S214                                                    &
        COMP=COAL   URCOAL    SLAG                                    &
        FRAC=0.0     0.0       0.0                                    /
        STRM=2S215                                                    &
        COMP=COAL   URCOAL    SLAG                                    &
        FRAC=0.0     0.0       0.0                                    /
        STRM=2S216                                                    &
        COMP=COAL   URCOAL    SLAG                                    &
        FRAC=1.0     1.0       1.0
;
;
STREAM-REPORT P2
   STREAMS STRM=ALL
   FLOW-FRAC SUBS=MIXED BASES=MASS / SUBS=NC BASES=MASS
   INTENSIVE-PROPS SUBS=MIXED BASES=MASS &
                   PROPS=TEMP PRES MW ENTH ENTR DENS HCAP/
                   SUBS=NC BASES=MASS &
                   PROPS=TEMP PRES ENTH DENS HCAP
;
; End of input file T2V2HSV.INP
```