U.S. DEPARTMENT OF ENERGY
PITTSBURGH ENERGY TECHNOLOGY CENTER

DIRECT COAL LIQUEFACTION
BASELINE DESIGN
AND
SYSTEM ANALYSIS

CONTRACT NO. DEAC22 90PC89857

FINAL REPORT ON BASELINE AND IMPROVED BASELINE

VOLUME IV

CAPITAL COST AND ECONOMICS FOR BASELINE

AMOCO

BECHTEL

MARCH 1993
PITTSBURGH, PENNSYLVANIA

Bechtel

3000 Post Oak Boulevard
Houston, Texas 77056-6503
Mailing address: P.O. Box 2166
Houston, Texas 77252-2166

March 8, 1993

U. S. Department of Energy
Pittsburgh Energy Technology Center
Mail Stop 922-H
P. O. Box 10940
Pittsburgh, PA 15236

Attention: Mr. Swenam Lee
Project Manager

Subject: D.O.E. Coal Liquefaction
Base Line Design and System Analysis
Contract No. DE-AC22 90PC89857
Bechtel Job No. 20952
Final Report on Study
Letter No. BLD-134

Dear Mr. Lee:

Enclosed are two copies of Volume IV of the subject multi-volume final report. The final report is published in nine volumes plus an executive summary. As requested, the remaining third copy of this nine volume report will be sent to you in 3-ring binders for your desk use. Copies to the other members of DOE, as requested by the contract, are sent directly to each of them.

Sincerely yours,

Syamal K. Poddar
Project Manger

SKP:tr
Enclosure

cc: Martin Byrnes, DOE/PETC
Robert Hamilton, DOE/PETC
A. Schachtschneider, AMOCO
File
Gilbert V. McGurl, DOE/PETC
Joanne Wastek, DOE/PETC

The information and data contained in this report are the result of an ecomonic evaluation and a preliminary design effort and because of the nature of this work no guarantees or warranties of performance, workmanship, or otherwise are made, either xpressed or by implication.

TABLE OF CONTENTS

TABLE OF CONTENTS

VOLUME IV

CAPITAL COST AND ECONOMICS FOR BASELINE

1. Economic Criteria and Considerations **1-1**

1.0 Estimate Basis
1.1 Raw Material and Utility Pricing
1.2 Product Valuation (PIMS)
1.3 First & Nth Plant Concepts

2. Overall Plant Configuration **2-1**

2.0 Configuration of the Complex
2.1 Number of Operating/Spare Trains (First & Nth Plants)
2.2 Maximum Single Train Capacities
2.3 Overall Material Balance

3. Reliability and Onstream Factor Analysis **3-1**

3.0 Methodology
3.1 Calculations and Results

4. Plant 1 (Coal Cleaning and Handling) **4-1**

4.0 Catalyst and Chemical Summary
4.1 On Stream Factor
4.2 Operating Manpower Requirements
4.3 Plot Area Required
4.4 Capital Cost and Breakdowns (First & Nth Plants)

5. Plant 1.4 (Coal Grinding and Drying) **5-1**

5.0 On Stream Factor
5.1 Operating Manpower Requirements
5.2 Plot Area Required
5.3 Capital Cost and Breakdowns (First & Nth Plants)

6. Plant 2 (Coal Liquefaction) **6-1**

6.0 Catalyst and Chemical Summary
6.1 On Stream Factor
6.2 Operating Manpower Requirements

VOLUME IV - continued

6.3 Plot Area Required
6.4 Capital Cost and Breakdowns (First & Nth Plants)

7. Plant 3 (Gas Plant) 7-1

7.0 Catalyst and Chemical Summary
7.1 On Stream Factor
7.2 Operating Manpower Requirements
7.3 Plot Area Required
7.4 Capital Cost and Breakdowns (First & Nth Plants)

8. Plant 4 (Naphtha Hydrotreater) 8-1

8.0 Catalyst and Chemical Summary
8.1 On Stream Factor
8.2 Operating Manpower Requirements
8.3 Plot Area Required
8.4 Capital Cost and Breakdowns (First & Nth Plants)

9. Plant 5 (Gas Oil Hydrotreater) 9-1

9.0 Catalyst and Chemical Summary
9.1 On Stream Factor
9.2 Operating Manpower Requirements
9.3 Plot Area Required
9.4 Capital Cost and Breakdowns (First & Nth Plants)

10. Plant 6 (Hydrogen Purification) 10-1

10.0 Catalyst and Chemical Summary
10.1 On Stream Factor
10.2 Operating Manpower Requirements
10.3 Plot Area Required
10.4 Capital Cost and Breakdowns (First & Nth Plants)

11. Plant 8 (Critical Solvent Deashing Unit) 11-1

11.0 Catalyst and Chemical Summary
11.1 On Stream Factor
11.2 Operating Manpower Requirements
11.3 Plot Area Required
11.4 Capital Cost and Breakdowns (First & Nth Plants)

VOLUME IV - continued

12. Plant 9 (Hydrogen Production By Coal Gasification) **12-1**

12.0 Catalyst and Chemical Summary
12.1 On Stream Factor
12.2 Operating Manpower Requirements
12.3 Plot Area Required
12.4 Capital Cost and Breakdowns (First & Nth Plants)

13. Plant 10 (Air Separation) **13-1**

13.0 Catalyst and Chemical Summary
13.1 On Stream Factor
13.2 Operating Manpower Requirements
13.3 Plot Area Required
13.4 Capital Cost and Breakdowns (First & Nth Plants)

14. Plant 11 (By-Product Sulfur Recovery) **14-1**

14.0 Catalyst and Chemical Summary
14.1 On Stream Factor
14.2 Operating Manpower Requirements
14.3 Plot Area Required
14.4 Capital Cost and Breakdowns (First & Nth Plants)

15. Plant 19 (Relief and Blowdown Facilities) **15-1**

15.0 Operating Manpower Requirements
15.1 Plot Area Required
15.2 Capital Cost and Breakdowns (First & Nth Plants)

16. Plant 20 (Tankage) **16-1**

16.0 Operating Manpower Requirements
16.1 Plot Area Required
16.2 Capital Cost and Breakdowns (First & Nth Plants)

17. Plant 21 (Interconnecting Piping Systems) **17-1**

17.0 Capital Cost and Breakdowns (First & Nth Plants)

18. Plant 22 (Product Shipping) **18-1**

18.0 Operating Manpower Requirements
18.1 Plot Area Required
18.2 Capital Cost and Breakdowns (First & Nth Plants)

VOLUME IV - continued

19. Plant 23 (Tank Car/Tank Truck Loading) **19-1**

19.0 Operating Manpower Requirements
19.1 Plot Area Required
19.2 Capital Cost and Breakdowns (First & Nth Plants)

20. Plant 24 (Coal Refuse and Ash Disposal) **20-1**

20.0 Operating Manpower Requirements
20.1 Plot Area Required
20.2 Capital Cost and Breakdowns (First & Nth Plants)

21. Plant 25 (Catalyst and Chemical Handling) **21-1**

21.0 Catalyst and Chemical Summary
21.1 Operating Manpower Requirements
21.2 Plot Area Required
21.3 Capital Cost and Breakdowns (First & Nth Plants)

22. Plant 30 (Electrical Distribution System) **22-1**

22.0 Operating Manpower Requirements
22.1 Capital Cost and Breakdowns (First & Nth Plants)

23. Plant 31 (Steam and Power Generation) **23-1**

23.0 Catalyst and Chemical Summary
23.1 Operating Manpower Requirements
23.2 Plot Area Required
23.3 Capital Cost and Breakdowns (First & Nth Plants)

24. Plant 32 (Raw, Cooling and Potable Water Systems) **24-1**

24.0 Catalyst and Chemical Summary
24.1 Operating Manpower Requirements
24.2 Plot Area Required
24.3 Capital Cost and Breakdowns (First & Nth Plants)

25. Plant 33 (Fire Protection Systems) **25-1**

25.0 Operating Manpower Requirements
25.1 Plot Area Required
25.2 Capital Cost and Breakdowns (First & Nth Plants)

VOLUME IV - continued

26. Plant 34 (Sewage and Effluent Water Treatment) **26-1**

26.0 Catalyst and Chemical Summary
26.1 Operating Manpower Requirements
26.2 Plot Area Required
26.3 Capital Cost and Breakdowns (First & Nth Plants)

27. Plant 35 (Instrument and Plant Air Facilities) **27-1**

27.0 Operating Manpower Requirements
27.1 Capital Cost and Breakdowns (First & Nth Plants)

28. Plant 36 (Purge and Flush Oil System) **28-1**

28.0 Capital Cost and Breakdowns (First & Nth Plants)

29. Plant 37 (Solid Waste Management) **29-1**

29.0 Operating Manpower Requirements
29.1 Plot Area Required
29.2 Capital Cost and Breakdowns (First & Nth Plants)

30. Plant 38 (Ammonia Recovery) **30-1**

30.0 Catalyst and Chemical Summary
30.1 On Stream Factor
30.2 Operating Manpower Requirements
30.3 Plot Area Required
30.4 Capital Cost and Breakdowns (First & Nth Plants)

31. Plant 39 (Phenol Recovery) **31-1**

31.0 Catalyst and Chemical Summary
31.1 On Stream Factor
31.2 Operating Manpower Requirements
31.3 Plot Area Required
31.4 Capital Cost and Breakdowns (First & Nth Plants)

32. Plant 40 (General Site Preparation) **32-1**

32.0 Capital Cost and Breakdowns (First & Nth Plants)

VOLUME IV - continued

33. Plant 41 (Buildings) **33-1**

33.0 Capital Cost and Breakdowns (First & Nth Plants)

34. Plant 42 (Telecommunications Systems) **34-1**

34.0 Capital Costs and Breakdowns (First & Nth Plants)

35. Overall Raw Material, Catalyst and Chemical Costs (Baseline) **35-1**

36. Overall Product/Byproduct Values (Baseline) **36-1**

37. Overall Utility Unit Prices and Consumptions (Baseline) **37-1**

38. Overall Labor Requirements and Rates (Baseline) **38-1**

38.0 Staffing Plan
38.1 Base Wages and Salaries

39. First Plant Overall Capital Costs (Baseline) **39-1**

39.0 ISBL Plant Field Cost Summaries
39.1 OSBL Plant Field Cost Summaries
39.2 ISBL Installed Plant Costs
39.3 Overall Plant Costs

40. Nth Plant Overall Capital Costs (Baseline) **40-1**

40.0 ISBL Plant Field Cost Summaries
40.1 OSBL Plant Field Cost Summaries
40.2 ISBL Installed Plant Costs
40.3 Overall Plant Costs

41. Option 1 (Liquefaction Feed Coal Cleaning by Heavy Media Separation) **41-1**

41.0 Capital Costs (First & Nth Plants)
41.1 Delta Operating Requirements

VOLUME IV - continued

42. Option 2 (Liquefaction Feed Coal Cleaning by Spherical Agglomeration) **42-1**

42.0 Capital Costs (First & Nth Plants)
42.1 Delta Operating Requirements

43. Option 3 (Thermal-Catalytic Liquefaction Reactor Configuration) **43-1**

43.0 Capital Costs (First & Nth Plants)
43.1 Delta Operating Requirements

44. Option 4 (Catalytic-Catalytic Reactor Configuration With Vent Gas Separation) **44-1**

44.0 Capital Costs (First & Nth Plants)
44.1 Delta Operating Requirements

45. Option 5 (Fluid Coking of Vacuum Bottoms) **45-1**

45.0 Capital Costs (First & Nth Plants)
45.1 Delta Operating Requirements

46. Option 6 (Steam Reforming of Natural Gas Plus FBC Unit for Hydrogen Production) **46-1**

46.0 Capital Costs (First & Nth Plants)
46.1 Delta Operating Requirements

47. Option 7 (Naphtha Reforming) **47-1**

47.0 Capital Costs (First & Nth Plants)
47.1 Delta Operating Requirements

48. Economics **48-1**

48.0 Key Assumptions

48.1 Results

48.1.1 Baseline
48.1.2 Baseline plus Option 1
48.1.3 Baseline plus Option 2
48.1.4 Baseline plus Option 3
48.1.5 Baseline plus Option 4
48.1.6 Baseline plus Option 5

VOLUME IV - continued

48.1.7 Baseline plus Option 6
48.1.8 Baseline plus Option 7

49. Discussion **49-1**

Appendix Computation of Onstream Factor **A-1**

LIST OF TABLES

NO.	TITLE	PAGE
1.1	Raw Material and Utility Pricing	1-6
1.2	Salient Features of Various Cases	1-9
1.3	Product Valuation for Various Cases	1-10
2.1	Operating/Spare Trains for First & Nth Plants	2-1
2.1	Maximum Capacity for Single Train	2-3
3.1	Plant Grouping for Onstream Factor	3-2
3.2	Operating Probabilities for Each Train of ISBL Plants	3-3
3.3	Turnaround Schedule of ISBL Plants	3-4
3.4	Expected Onstream Factor Base Case (First Plant)	3-5
4.1	Plant 1 (Coal Cleaning and Handling) Field Costs and Breakdowns, 2nd Quarter, 1991	4-2
5.1	Plant 1.4 (Coal Grinding and Drying) Field Costs and Breakdowns, 2nd Quarter, 1991	5-1
6.1	Plant 2 (Coal Liquefaction) Field Costs and Breakdowns, 2nd Quarter, 1991	6-2
7.1	Plant 3 (Gas Plant) Field Costs and Breakdowns, 2nd Quarter, 1991	7-2
8.1	Plant 4 (Naphtha Hydrotreater) Field Costs and Breakdowns, 2nd Quarter, 1991	8-2
9.1	Plant 5 (Gas Oil Hydrotreater) Field Costs and Breakdowns, 2nd Quarter, 1991	9-2
10.1	Plant 6 (Hydrogen Purification) Field Costs and Breakdowns, 2nd Quarter, 1991	10-2
11.1	Plant 8 (Critical Solvent Deashing) Field Costs and Breakdowns, 2nd Quarter, 1991	11-2
12.1	Plant 9 (Hydrogen Production by Coal Gasification) Field Costs and Breakdowns, 2nd Quarter, 1991	12-2

VOLUME IV - continued

13.1 Plant 10 (Air Separation)
Field Costs and Breakdowns, 2nd Quarter, 1991 13-2

14.1 Plant 11 (Byproduct Sulfur Recovery)
Field Costs and Breakdowns, 2nd Quarter, 1991 14-2

15.1 Plant 19 (Relief and Blowdown)
Field Costs and Breakdowns, 2nd Quarter, 1991 15-2

16.1 Plant 20 (Tankage)
Field Costs and Breakdowns, 2nd Quarter, 1991 16-1

17.1 Plant 21 (Interconnecting Piping)
Field Costs and Breakdowns, 2nd Quarter, 1991 17-1

18.1 Plant 22 (Product Shipping)
Field Costs and Breakdowns, 2nd Quarter, 1991 18-1

19.1 Plant 23 (Tank Car/Tank Truck Loading)
Field Costs and Breakdowns, 2nd Quarter, 1991 19-1

20.1 Plant 24 (Coal Refuse and Ash Disposal)
Field Costs and Breakdowns, 2nd Quarter, 1991 20-1

21.1 Overall Complex Catalyst and Chemical Summary 21-1

21.2 Plant 25 (Catalyst and Chemicals Handling)
Field Costs and Breakdowns, 2nd Quarter, 1991 21-3

22.1 Plant 30 (Electrical Distribution System)
Field Costs and Breakdowns 22-1

23.1 Plant 31 (Steam and Power Generation)
Field Costs and Breakdowns 23-2

24.1 Plant 32 (Raw, Cooling and Potable Water Systems)
Field Costs and Breakdowns 24-2

25.1 Plant 33 (Fire Protection Systems)
Field Costs and Breakdowns 25-1

26.1 Plant 34 (Sewage and Effluent Water)
Field Costs and Breakdowns 26-1

VOLUME IV - continued

27.1 Plant 35 (Instrument and Plant Air Facilities) Field Costs and Breakdowns 27-1

28.1 Plant 36 (Purge and Flush Oil System) Field Costs and Breakdowns 28-1

29.1 Plant 37 (Solid Waste Management) Field Costs and Breakdowns 29-1

30.1 Plant 38 (Ammonia Recovery) Field Costs and Breakdowns 30-1

31.1 Plant 39 (Phenol Recovery) Field Costs and Breakdowns 31-2

32.1 Plant 40 (General Site Preparation) Field Costs and Breakdowns 32-1

33.1 Plant 41 (Buildings/DCS System) Field Costs and Breakdowns 33-1

34.1 Plant 42 (Telecommunications System) Field Costs and Breakdowns 34-1

35.1 Catalyst and Chemicals Cost 35-1

37.1 Raw Material and Utility Pricing 37-1

38.1 Base Wages and Salaries 38-9

39.0 Estimated Total Field Costs for Coal Liquefaction Complex - Process Units (ISBL) - First Plant 39-3

39.1 Estimated Total Field Costs for Coal Liquefaction Complex - Offsites/Utilities (OSBL) - First Plant 39-5

39.2 ISBL Installed Plant Costs 39-7

39.3 Estimated Overall Cost Summary for Coal Liquefaction Complex 39-8

40.1 Estimated Total Field Costs for Coal Liquefaction Complex - Process Units (ISBL) - Nth Plant 40-3

VOLUME IV - continued

40.2 Estimated Total Field Costs for Coal Liquefaction Complex - Offsites/Utilities (OSBL) - Nth Plant 40-5

40.3 ISBL Installed Plant Costs 40-7

40.4 Overall Cost Summary for Coal Liquefaction Complex - Nth Plant 40-8

41.1 Capital Costs (First Plant) 41-1
41.2 Capital Costs (Nth Plant) 41-2

42.1 Capital Cost for the Complex - Option 2 for First Plant 42-1
42.2 Capital Cost for the Complex - Option 2 for Nth Plant 42-2

43.1 Capital Cost for the Complex - Option 3 for First Plant 43-1
43.2 Capital Cost for the Complex - Option 3 for Nth Plant 43-2

44.1 Capital Cost for the Complex - Option 4 for First Plant 44-1
44.2 Capital Cost for the Complex - Option 4 for Nth Plant 44-2

45.1 Capital Cost for the Complex - Option 5 for First Plant 45-1
45.2 Capital Cost for the Complex - Option 5 for Nth Plant 45-2

46.1 Capital Cost for the Complex - Option 6 for First Plant 46-1
46.2 Capital Cost for the Complex - Option 6 for Nth Plant 46-2

47.1 Capital Cost for the Complex - Option 7 for First Plant 47-1
47.2 Capital Cost for the Complex - Option 7 for Nth Plant 47-2

48.1 Economic Analysis of the Baseline Case 48-1
48.2 Economic Analysis for Option 1 48-5
48.3 Economic Analysis for Option 2 48-8
48.4 Economic Analysis for Option 3 48-11
48.5 Economic Analysis for Option 4 48-14
48.6 Economic Analysis for Option 5 48-17
48.7 Economic Analysis for Option 6 48-20
48.8 Economic Analysis for Option 7 48-23
48.9 Crude Oil Equivalent (COE) Price for Various Options 48-26
48.10 Economic Results on Sensitivities for Baseline 48-27

LIST OF FIGURES

NO.	TITLE	PAGE
2.1	Overall Plant Configuration	2-2
2.2	Overall Material Balance	2-4
38.1	Overall Plant Organization	38-2
38.2	Laboratory Organization and Personnel	38-3
38.3	Operations Organization and Personnel	38-4
38.4	Engineering Organization and Personnel	38-5
38.5	Environment, Health, Safety and Security Organization and Personnel	38-6
38.6	Administrative Organization and Personnel	38-7
38.7	Maintenance Organization and Personnel	38-8

1. ECONOMIC CRITERIA AND CONSIDERATIONS

1. Economic Criteria and Considerations

1.0 Estimate Basis

This is an estimate of the capital costs for a major direct coal liquefaction facility to be located in Perry County, Illinois. The plant capacity is a nominal 62,000 barrels per stream day of petroleum liquids, (C_5^+) utilizing Wilsonville's two stage liquefaction technology.

The estimate is based on a scope definition as appeared in the Statement of Work of contract number DEAC22 90PC89857, and subsequent contract modifications. It is further based on work done by Bechtel/Amoco in the Project Definition (Volume I) and the Process Design (Volumes IIA and IIB).

This is a preliminary-type estimate with an associated accuracy of ±30%. Costs for major equipment have been developed for each individual item. From this information, the total installed cost was derived utilizing various curves, ratios and factors based on Bechtel's historical data for similar or related facilities.

The paragraphs that follow describe the methods and techniques used in completing each portion of the estimate.

Major Equipment

The major equipment was priced using curves and unit cost comparison for similar items from other recent Bechtel projects. The remaining equipment, especially unique or special items, was priced using vendor or technology licensor estimates.

The major equipment was considered on an item-by-item basis within each plant, unit or facility. General design parameters were extracted from equipment summary sheets, recognizing such features as size, capacity, metallurgy, wall thickness, etc. Typical design characteristics and units of measurement that were used to estimate costs for various classifications of equipment can be summarized as follows:

- Columns & Vessels
  - Based on tons of steel, metallurgy and plate thickness. Internals priced separately
- Tanks
  - Classified as to type and priced at barrels of capacity

Heat Exchangers

- Identified as air coolers or shell and tube type, priced on the basis of metallurgy and tube surface area

- Fired Heaters
  - Specified as to absorbed heat duty (MM Btu/hr) and priced utilizing vendor data and cost curves
- Pumps and Drivers
  - Case material, driver-type and brake horsepower were used
- Vacuum Equipment
  - Utilized vendor estimates
- Compressors and Drivers
  - Classified as reciprocal or centrifugal and priced on the basis of driver brake horsepower, using vendor estimates
- Special Equipment
  - Used vendor estimates for packaged or special equipment

Subcontract Costs

The estimate is based on a number of items being purchased and erected by subcontractors. Items such as tank construction, site preparation, boiler erection, etc., are typically supplied by someone other than the prime contractor, and these items have been shown as separate subcontract costs. These subcontracts include all material, labor, overhead and fees related to the work.

Bulk Materials

The costs of bulk materials were developed in two ways. First, in the process units all bulk materials and labor costs were derived from ratios and factors related to the major equipment costs. These factors were tailored to each process unit, based on Bechtel's in-house historical data for similar types of facilities. In certain cases, adjustments have been made to allow for special or unique characteristics of the unit.

The second method was used for estimating bulk materials involving the support and interconnecting plants. For these plants, it was necessary to develop quantity data based on preliminary plot plans and site plan arrangements, with assumptions made for routings, line sizes, pipeway configurations, etc. These preliminary quantities were priced on an itemized basis and compared to other large, complex projects as a cross check.

Bulk Subcontract Costs

Certain activities such as insulation, buildings, and painting have, in all cases, been based on subcontracts. For insulation and painting, the estimates are based on a percentage of major equipment costs. Buildings are estimated separately in Plant 41.

Direct Labor Manhours

For erection of major equipment, the direct labor manhours were calculated on the basis of unit rates and manhour standards for each individual item.

Because this preliminary level estimate does not contain detailed quantity data for bulk materials, the manhours required for these items have been applied as a percentage, or factor, of the bulk material cost which in turn was derived from factors related to the major equipment cost. These ratios have been tailored and adjusted at the plant level to conform to historical Bechtel experience for similar types of units, corrected to be site specific for the Perry County, Illinois job location.

Direct Labor Costs

The manhours derived above were priced using an overall, net average job wage rates in effect for this location based on Bechtel in-house wage rates for mid-1991 time frame.

Sales Tax

Sales tax is inapplicable here as this project is deemed exempt from sales tax.

Field Indirect Costs (Distributables)

Field indirect costs or distributable costs for this type of estimate are estimated as a percentage of direct labor cost taking into consideration the site location, job master schedule, project construction plan, subcontracting plan, etc. The indirect percentage is based on Bechtel's experience from other large, grassroots, refinery-type construction projects.

The overall distributable field costs have been estimated separately for each process or support plant in the complex.

The construction phase of the 5-year project schedule is scheduled for approximately four (4) years. As a result of construction duration the normally temporary-type construction offices and warehouses will be of a permanent nature. The sewage treatment facilities are handled similarly.

Items that are included in the indirect cost can be grouped into four functional areas, which are summarized below:

- Temporary Construction Services

  - Includes office buildings, warehouses, working areas and bays, temporary roads, walks, parking area and fences; railroad and barge unloading facilities; power, light and telephone facilities; minor temporary construction; general purpose scaffolding, cribbing and drainage; sanitary facilities

- Miscellaneous Construction Services

  - General and final cleanup, maintenance of tools and equipment; material handling, welder's supplies and testing, watchmen and guards and surveying

  Construction Equipment and Tools

  - Supplies and purchased utilities, fuels and lubricants. All types of construction equipment whether rented or purchased, and tools

- Field Office Cost

  - Nonmanual supervision, administration, warehousing and purchasing, first aid, safety and medical, nonmanual payroll adds and benefits, field office overhead, nonmanual travel and subsistence

Home Office Manhour

An evaluation of home office manhours has been included in the estimate. The estimate was produced first by an analysis of the engineering scope developed in the design and consisting of process descriptions, lists of equipment, estimated numbers of drawings, material requisitions, specifications, etc. The engineering manhours associated with this scope were estimated on overall project basis utilizing experience from similar types of projects.

Manhours for home office support services have also been included. These were added as a percentage of the engineering requirements for this plant. The percentage is based on historical data from other large, refinery-type projects and includes the following typical functions:

- Project Management
- Technical Services (Project Controls)
- Construction Management
- Procurement
- Commercial Services

Home Office Costs

The home office manhours, derived above, were priced using an overall average rate, based on Bechtel's current Houston office experience. The rate was developed by an analysis of salaries for various employment classifications and was distributed on a weighted basis for an organization of the size and complexity of this project.

In addition to the base salaries, the following items are included in the overall average rate:

- Bechtel standard payroll additives for taxes and insurance
- Engineering supplies
- General office supplies
- Communication costs
- Indirect cost allowances for facility and overhead items
- Fringe benefits
- Reproduction and printing
- Computer charges
- Travel expense (home office personnel)

Risk Analysis

A typical risk analysis was made using Bechtel's Risk Analysis - Contingency (RAC) program. This program helps to define the accuracy of the estimate, presents the most probable cost, assesses the risks and shows the probability of an overrun at various levels of contingency. The results of this program are normally used to aid in establishing the estimating contingency for the project.

Fee

For estimating purposes, the contractor's fee has been included in the single figure overall project estimate for Engineering, Home Office and Fee.

Estimate Exclusions

The capital cost estimate does not include cost for the items listed below.

- Land cost for site
- Socioeconomic considerations; community facilities, camp or other infrastructure
  Permits and bonds
  Cost of importing borrow fill material from offsite for site fill and compaction
  Gas pipeline

  Electric transmission line
  Cost of setting up remote preassembly yards and facilities
  Credit or debit for worldwide procurement
  Potable water wells
- Allowance for incentive to attract labor

1.1 Raw Material and Utility Pricing

The pricing of raw materials and utilities required for the baseline design and options are listed in Table 1.1 below.

Table 1.1

Raw Material and Utility Pricing

Item	Cost
Feed Coal	20.50 (1) $/s. ton
Raw Water	0.10 (2) $/Mgal
Natural Gas	2.00 (3) $/MMBTU

(1) Coal Week, March 9, 1992
(2) Typical price for raw water in Southern Illinois
(3) General consensus between Amoco, Bechtel and DOE/PETC

1.2 Product Valuation (PIMS)

The valuation of coal liquid products were carried out by utilizing Bechtel's linear programming modeling tool, PIMS (Process Industry Modeling Systems). Such valuations were calculated for various scenarios as case studies. Salient points for these scenarios are highlighted below and summarized in Table 1.2. The results are included in Table 1.3.

Primary input data utilized to run the model were:

Typical PAD II crude with fixed crude price
Coal liquid products rates and physical property
Constraints related to various options

Primary output results are:

Product valuation and syncrude premium[1].

Salient points for the various scenarios:

Case 1 is for a typical PAD 2 refinery handling only petroleum crude (no coal liquid) with a maximum processing capacity of 130 MBPD of average PAD 2 crude mix and 20 MBPD of Alaskan North Slope Crude. In this case the refinery product make is allowed to float up to the maximum market requirement level.

Case 1A is same as case 1 with the exception of floating the product slate as well as the feed composition.

The following cases are with various fractions of coal liquids available to the refinery. For this case study it is assumed that the naphtha fraction of the coal liquid (C5-350) is sent to the reforming unit, the light distillate fraction (350-450) is for blending (diesel and fuel oil), the heavy distillate fraction (450-650) is for diesel and fuel oil blending and also used as FCCU feed, and the vacuum gas oil (650-850) is used as fuel oil blending stock and FCCU feed.

Case 2A is for changing the feed to the typical PAD 2 refinery with 100% of coal liquids (61.94 MBPD) being available with corresponding amount of petroleum feed being backed out. There is not enough degrees of freedom in this case and consequently the case is infeasible. (Note: Case 7A resolves this infeasibility.)

---

[1] Syncrude premium is defined as the ratio of the product value for any particular product for any particular case and petroleum crude price for the refinery.

Case 2B is same as Case 2A; however, the coal liquid is available at 50% of its production rate (having the same composition). This is a feasible case and the value per BBL of coal liquid mix (with the same product slate as the baseline coal liquefaction complex produces) is $19.04.

Case 2C is same as case 2B with coal liquid available at 25% production rate instead of 50%. The value per BBL of coal liquid mix is 19.06.

Case 2D simulates the case where the coal liquid addition to refinery is very small (1 MBPD), first drop to refinery. The value of coal liquid mix is $19.27 per BBL.

Cases 7A, 7B, 7C and 7D are similar to cases 2A, 2B, 2C and 2D respectively with the exception that the refining product slates for these cases have been floated. For these relaxed cases the values of the respective coal liquids have increased to $20.63, $22.45, $22.84 and $22.90 per BBL respectively.

Cases 3A, 4A, 5A and 6A for 100% naphtha (C5-350), 100% light distillate (350-450), 100% heavy distillate (450-650) and 100% gas oil (650-850) respectively entering the refinery with other conditions remaining same as in case 1. The values of the respective fractions of the coal liquids are $18.65, $12.80, $19.21 and $16.26. Note that the maximum value is achievable for heavy distillate.

Cases 3B, 4B, 5B and 6B are similar to Cases 3A, 4A, 5A and 6A respectively with the exception that in each of these cases the respective coal liquid addition to refinery was kept at a minimum level of 1 MBPD. The value of the fractions increased to $19.24, 18.78, $19.66 and $18.77 respectively.

The respective syncrude premium for various cases are included in Table 1.3.

Table 1.2 Salient Features of Various Cases	
Case	**Salient Feature**
1	Refinery product make is floated up to the maximum market requirement
1A	Product slate as well as the feed composition are floated
2A	A portion of feed to the typical PAD 2 refinery is replaced with the total production of coal liquids (61.94 MBPD)
2B	Same as 2A, however, the replacement is for 50% of coal liquids (with same composition)
2C	Same as 2A, however, the replacement is for 25% of coal liquids (with same composition)
2D	Very small addition (first drop of coal liquid to refinery), 1 MBPD
3A	100% of vapor in a (C_5 - 350°F) is added to the refinery with other conditions remaining same as 1
3B	Same as 3A, but the addition of naphtha is only 1 MBPD
4A	100% of light distillate (350°F - 450°F) is added to the refinery with other conditions remaining same as 2
4B	Same as 4A, but the addition of light distillate is only 1 MBPD
5A	100% of heavy distillate (450°F - 650°F) is added to the refinery with other conditions remaining same as 2A
5B	Same as 5A, but the addition of heavy distillate is only 1 MBPD
6A	100% gas oil (650°F - 850°F) is added to the refinery with other conditions remaining same as 2A
6B	Same as 6A, but the addition of gas oil (650°F - 850°F) is only 1 MBPD
7A	Same as 2A, with refining product slate floated
7B	Same as 2B with refining product slates floated
7C	Same as 2C with refining product slates floated
7D	Same as 2D with refining product slates floated

Table 1.3

PRODUCT VALUATION FOR VARIOUS CASES

CASE NO.	1	1A	2A	2B	2C	2D
COAL LIQUIDS	ZERO	ZERO	100 % MIX	50% MIX	25% MIX	1 MBPD MIX
PRODUCT SLATE	MAX	FLOAT	MAX	MAX	MAX	MAX
OBJ FUNCTION, M$/DAY	623.46	708.95	N/A	1213.26	918.66	642.73
FEEDSTOCK PURCHASES						
==========	MBPD	MBPD	MBPD	MBPD	MBPD	MBPD
*PD2 AVG PAD2 CRUDE MIX	126.900	130.000		92.157	109.469	125.706
ANS ALASKAN NORTH SLOPE	1.239	20.000	I	1.239	1.239	1.239
NC4 NORMAL BUTANE	0.778	0.699	N	1.822	1.296	0.821
PGS H2 PLT FEED GAS, FOE	0.000	0.000	F	0.000	0.000	0.000
IC4 ISOBUTANE	2.041	2.041	E	2.041	2.041	2.041
MNC C5-350 COAL NAPHTHA	0.000	0.000	A	9.598	4.799	0.310
LDC 350-450 COAL LT DIST	0.000	0.000	S	3.902	1.951	0.126
HDC 450-650 COAL HV DIST	0.000	0.000	I	10.818	5.409	0.349
LVC 650-850 COAL LVGO	0.000	0.000	B	6.655	3.328	0.215
	---	---	L	---	---	---
TOTAL FEEDSTOCKS	130.958	152.740	E	128.230	129.530	130.806
PRODUCT SALES						
==========						
*LPG LPG	4.078	4.834		3.248	3.639	4.056
URG UNLEADED REGULAR	46.284	37.284		46.284	46.284	46.284
UPR UNLEADED PREMIUM	19.836	42.120		19.836	19.836	19.836
LRG LEADED REGULAR	6.614	0.000		6.614	6.614	6.614
JET KERO/JET	12.497	22.567		12.497	12.497	12.497
DSL DIESEL	29.133	24.149		29.133	29.133	29.133
LSF LOW SULFUR FUEL OIL	0.117	0.000		0.600	0.333	0.043
HSF HIGH SULFUR FUEL OIL	2.736	5.256		2.151	2.439	2.736
ASP ASPHALT	6.216	11.931		6.216	6.216	6.216
CKE COKE, TONS	0.649	0.762		0.450	0.549	0.643
SUL SULFUR, LTONS	0.059	0.067		0.037	0.048	0.058
FLR FUEL TO FLARE, FOEB	0.035	0.105		0.000	0.000	0.000
	---	---		---	---	---
TOTAL PRODUCTION	127.512	148.141		126.578	126.991	127.415
LIQ RECOVERY, %	97.4	97.0		98.7	98.0	97.4

* The three character symbols in this column for feedstock purchases and product sales are used to identify streams in the PIMS model.

Table 1.3 - continued
PRODUCT VALUATION FOR VARIOUS CASES

CASE NO.	7A	7B	7C	7D	3A	4A
COAL LIQUIDS	100 % MIX	50% MIX	25% MIX	1 MBPD MIX	100% MNC NAPHTHA	100% LDC LT DIST
PRODUCT SLATE	FLOAT	FLOAT	FLOAT	FLOAT	MAX	MAX
OBJ FUNCTION, M$/DAY	1986.74	1404.24	1062.70	731.84	981.41	723.37
FEEDSTOCK PURCHASES						
==========	MBPD	MBPD	MBPD	MBPD	MBPD	MBPD
*PD2 AVG PAD2 CRUDE MIX	108.862	130.000	130.000	130.000	102.783	110.312
ANS ALASKAN NORTH SLOPE	1.239	20.000	20.000	20.000	4.395	1.239
NC4 NORMAL BUTANE	2.215	1.441	1.274	0.737	2.167	0.753
PGS H2 PLT FEED GAS, FOE	0.000	0.000	0.000	0.000	0.000	0.000
IC4 ISOBUTANE	2.041	2.041	2.041	2.041	1.260	2.041
MNC C5-350 COAL NAPHTHA	19.195	9.598	4.799	0.310	19.195	0.000
LDC 350-450 COAL LT DIST	7.803	3.902	1.951	0.126	0.000	7.803
HDC 450-650 COAL HV DIST	21.635	10.818	5.409	0.349	0.000	0.000
LVC 650-850 COAL LVGO	13.310	6.655	3.328	0.215	0.000	0.000
	---	---	---	---	---	---
TOTAL FEEDSTOCKS	176.301	184.454	168.801	153.778	129.800	122.148
PRODUCT SALES						
==========						
*LPG LPG	4.205	4.898	5.097	4.852	3.285	3.789
URG UNLEADED REGULAR	22.950	35.647	34.847	37.069	46.284	44.714
UPR UNLEADED PREMIUM	65.166	54.670	53.473	42.921	19.836	19.836
LRG LEADED REGULAR	0.000	0.000	0.000	0.000	6.614	0.000
JET KERO/JET	5.357	27.447	22.754	22.567	12.497	12.497
DSL DIESEL	61.801	34.597	27.911	24.392	29.133	29.133
LSF LOW SULFUR FUEL OIL	0.527	0.648	0.525	0.034	0.000	0.600
HSF HIGH SULFUR FUEL OIL	2.632	9.965	7.487	5.400	2.197	2.736
ASP ASPHALT	10.056	11.931	11.931	11.931	6.216	6.216
CKE COKE, TONS	0.528	0.762	0.762	0.762	0.532	0.558
SUL SULFUR, LTONS	0.042	0.059	0.063	0.066	0.051	0.050
FLR FUEL TO FLARE, FOEB	0.000	0.000	0.000	0.000	0.000	0.000
TOTAL PRODUCTION	---	---	---	---	---	---
LIQ RECOVERY, %	172.694	179.803	164.025	149.166	126.062	119.521
	98.0	97.5	97.2	97.0	97.1	97.8

* The three character symbols in this column for feedstock purchases and product sales are used to identify streams in the PIMS model.

Tabl 1.3 - continued
PRODUCT VALUATION FOR VARIOUS CASES

CASE NO.	5A	6A	3B	4B	5B	6B
COAL LIQUIDS	100% HDC HV DIST	100% LVC LT VGO	1 MBPD MNC APHTHA	1 MBPD LDC LT DIST	1 MBPD HDC HV DIST	1 MBPD LVC LT VGO
PRODUCT SLATE	MAX	MAX	MAX	MAX	MAX	MAX
OBJ FUNCTION, M$/DAY	1039.17	839.84	642.70	642.23	643.12	642.23
FEEDSTOCK PURCHASES						
==========	MBPD	MBPD	MBPD	MBPD	MBPD	MBPD
*PD2 AVG PAD2 CRUDE MIX	103.588	102.862	125.646	125.788	125.712	125.836
ANS ALASKAN NORTH SLOPE	1.239	1.239	1.239	1.239	1.239	1.239
NC4 NORMAL BUTANE	1.204	0.986	0.865	0.813	0.783	0.782
PGS H2 PLT FEED GAS, FOE	0.000	0.000	0.000	0.000	0.000	0.000
IC4 ISOBUTANE	1.542	2.041	2.041	2.041	2.041	2.041
MNC C5-350 COAL NAPHTHA	0.000	0.000	1.000	0.000	0.000	0.000
LDC 350-450 COAL LT DIST	0.000	0.000	0.000	1.000	0.000	0.000
HDC 450-650 COAL HV DIST	21.635	0.000	0.000	0.000	1.000	0.000
LVC 650-850 COAL LVGO	0.000	13.310	0.000	0.000	0.000	1.000
	---	---	---	---	---	---
TOTAL FEEDSTOCKS	129.208	120.438	130.791	130.881	130.775	130.899
PRODUCT SALES						
==========						
*LPG LPG	3.772	3.191	4.046	4.072	4.057	4.020
URG UNLEADED REGULAR	46.284	46.284	46.284	46.284	46.284	46.284
UPR UNLEADED PREMIUM	19.836	19.836	19.836	19.836	19.836	19.836
LRG LEADED REGULAR	6.614	3.419	6.614	6.614	6.614	6.614
JET KERO/JET	12.497	12.497	12.497	12.497	12.497	12.497
DSL DIESEL	29.133	23.464	29.133	29.133	29.133	29.133
LSF LOW SULFUR FUEL OIL	0.600	0.600	0.000	0.082	0.058	0.184
HSF HIGH SULFUR FUEL OIL	2.306	2.736	2.736	2.736	2.736	2.736
ASP ASPHALT	6.216	6.216	6.216	6.216	6.216	6.216
CKE COKE, TONS	0.520	0.538	0.642	0.643	0.643	0.643
SUL SULFUR, LTONS	0.050	0.044	0.058	0.058	0.058	0.058
FLR FUEL TO FLARE, FOEB	0.000	0.000	0.000	0.000	0.000	0.000
TOTAL PRODUCTION	---	---	---	---	---	---
LIQ RECOVERY, %	127.258	118.243	127.362	127.470	127.432	127.520
	98.5	98.2	97.4	97.4	97.4	97.4

* The three character symbols in this column for feedstock purchases and product sales are used to identify streams in the PIMS model.

Table 1.3 - continued

PRODUCT VALUATION FOR VARIOUS CASES

CASE NO.	1	1A	2A	2B	2C	2D
INCREM REVENUE, M$/DAY	-	-	N/A	589.81	295.21	19.27
INCREM VOLUME, MBPD	-	-	N/A	30.97	15.49	1.00
VALUE OF COAL MIX, $/BBL	-	-	N/A	19.04	19.06	19.27
VALUE OF MNC NAPH, $/BBL	-	-				
VALUE OF LDC DIST, $/BBL	-	-				
VALUE OF HDC DIST, $/BBL	-	-				
VALUE OF LVC LVGO, $/BBL	-	-				
SYNCRUDE PREMIUM				1.057	1.059	1.069

CASE NO.	7A	7B	7C	7D	3A	4A
INCREM REVENUE, M$/DAY	1277.79	695.30	353.76	22.90	357.96	99.92
INCREM VOLUME, MBPD	-148.31	-148.31	-148.31	-148.31	-127.60	-127.60
VALUE OF COAL MIX, $/BBL	-8.62	-4.69	-2.39	-0.15		
VALUE OF MNC NAPH, $/BBL					-2.81	
VALUE OF LDC DIST, $/BBL						-0.78
VALUE OF HDC DIST, $/BBL						
VALUE OF LVC LVGO, $/BBL						
SYNCRUDE PREMIUM	1.146	1.247	1.269	1.272	1.036	0.711

CASE NO.	5A	6A	3B	4B	5B	6B
INCREM REVENUE, M$/DAY	415.71	216.38	19.24	18.78	19.66	18.77
INCREM VOLUME, MBPD	21.64	13.31	1.00	1.00	1.00	1.00
VALUE OF COAL MIX, $/BBL						
VALUE OF MNC NAPH, $/BBL			19.24			
VALUE OF LDC DIST, $/BBL				18.78		
VALUE OF HDC DIST, $/BBL	19.21				19.66	
VALUE OF LVC LVGO, $/BBL		16.26				18.77
SYNCRUDE PREMIUM	1.067	0.903	1.069	1.043	1.092	1.043

1.3 First & Nth Plant Conc pts

For any developing technology where the first commercial plant has not been built, there is a period of time certain items are initially assumed and later revised downward as the techology's commercial history is established. Such items are:

1. Design Basis including scale-up considerations (from the plant capacity at which the technology was proven to the capacity of the commercial plant).

2. Assumed design overcapacity factors which take the form of sparing of whole production trains. These over capacity factors have a direct impact on the onstream factor.

3. Project Schedule

The First plant concept is thus self-explanatory. It refers to the first commercial plant with a degree of over design to meet the name plate capacities and product specifications.

The period of time between the first commercial plant and the plant at which the technology commercial maturity is normally designated as N years. Thus the Nth plant is that commercial plant built N years after the first commercial plant for which the technology basis, plant design and operation are well known.

The focus of this volume of the report is to define and develop the Nth plant economics, as requested by DOE.

The Nth plant economics are defined as the economics of the Nth plant which has the following characteristics:

1. requires lowest reasonable plant cost contingency;

2. contains no spare trains;

3. incurs the lowest reasonable engineering cost;

4. requires the lowest possible project schedule to construct and start-up;

5. technology has matured to the point that the Nth plant overall stream factor of the complex remains the same as that of the First plant.

2. OVERALL PLANT CONFIGURATION

2. Overall Plant Configuration

2.0 Configuration of the Complex

The overall plant configuration for the entire liquefaction complex is shown in Figure 2.1

2.1 Number of Operating/Spare Trains (First & Nth Plants)

The number of operating and spare trains for each of the ISBL plants is shown in Table 2.1 below. This table includes the above information for the First plant as well as the Nth plant scenarios.

Table 2.1
Operating/Spare Trains for First & Nth Plants

Plant No.	No. of Oper. Train (1)	No. of Spare Train	
		First Plant	Nth Plant
1	5	0	0
1.4	10	2	0
2	5	1	0
3	1	0	0
4	1	0	0
5	1	0	0
6	1	0	0
8	1	0	0
9	5	1	0
10	5	0	0
11	4	0	0
38	1	0	0
39	1	0	0

(1) Number of operating trains remains the same for the First plant as well as the Nth plant scenarios.

2.2 Maximum Singl Train Capacities

The maximum single train capacities for all the ISBL plants are shown in Table 2.2 below:

Table 2.2

Maximum Capacity for Single Train

Plant No.	Feed Rate TPSD
1	6254
1.4	2323
2	3420
3	4111
4	2821
5	8267
6	2893
8	10889
9 (1)	1225
10	7689
11	1505
38	23360
39	16148

(1) Based on coal feed rate only

2.3 Overall Material Balance

The overall material balance for the entire complex showing input-output mass flow rates for each ISBL plant is shown in Figure 2.2. In addition, input-output mass flow rates for the waste water treatment plant (Plant 34) and the steam and power generation plant (Plant 31) are also included in this figure.

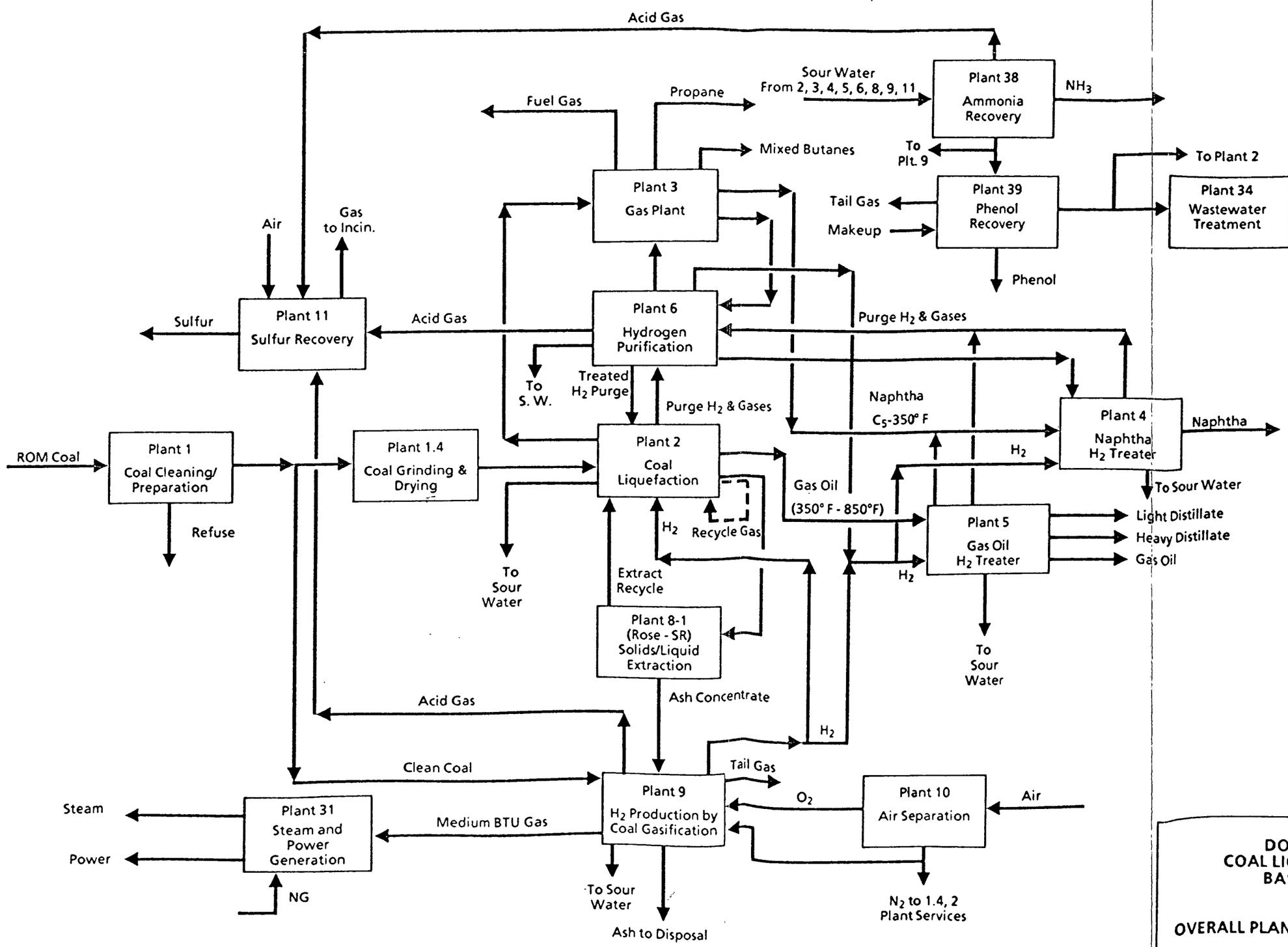

DOE / PETC
COAL LIQUEFACTION
BASE CASE

OVERALL PLANT CONFIGURATION

Figur 2.1

0891016-6

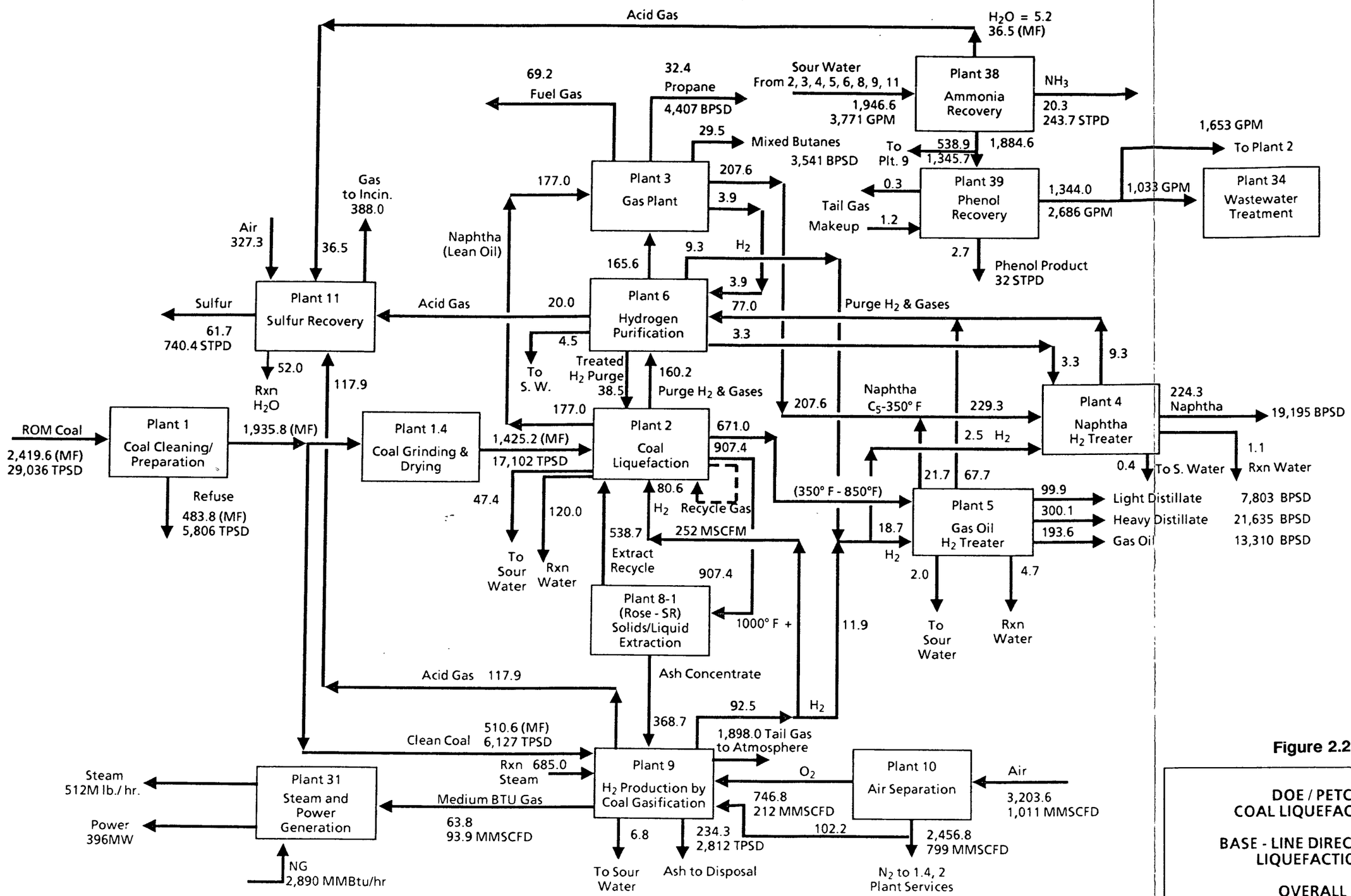

Notes:

1. Flow rates are in MLB/HR unless noted and on dry basis
2. Minor streams including steam, water, sour water, and make-up amine are not shown on this diagram
3. Flow rates around plants #38, 39, 34 are shown on wet basis

1291048-2

Figure 2.2

DOE / PETC
COAL LIQUEFACTION

BASE - LINE DIRECT COAL
LIQUEFACTION

OVERALL
MATERIAL BALANCE

3. RELIABILITY AND ONSTREAM FACTOR ANALYSIS

3. R liability and Onstream Factor Analysis

3.0 Methodology

The methodology used to determine the onstream factor for the entire coal liquefaction complex is highlighted below.

Divide ISBL plants of the complex into groups of plants having the same number of trains and interrelated operations

Carry out analysis to determine the following for each plant:

- o average failure rate
- o average repair time
- o average unscheduled outages

- Compute the probability of running (exclusive of turnarounds) for each group of plants

- Develop a turnaround schedule for each plant and calculate the duration of each turnaround pattern for each group of plants

- Calculate the probability of operation of each group of plants (considering unscheduled and scheduled turnarounds)

- Calculate the onstream factor on scheduled production for the entire complex

Determine average scheduled shutdown for groups without spares

- Determine scheduled production days per year

- Calculate onstream factor for the entire complex (based on calendar days)

3.1 Calculation of Onstream Factor

Grouping of Plants

For computing this onstream factor, the ISBL plants of the coal liquefaction complex were grouped as shown in Table 3.1.

Table 3.1
Plant Grouping for Onstream Factor

		No. of Trains	
Group	**Plants**	**Operating**	**Spare**
A	2	5	1
B	8,38,39	1	0
C	3,4,5,6	1	0
D	9	5	1
E	11	4	0
F	1.4	10	2
G	10	5	0

Note: Plant 1 (Coal Cleaning and Handling plant) does not impact the overall plant availability because it is decoupled from the rest of the plant by adequate storage.

Unscheduled Downtime

Unscheduled downtime and the probability of running is summerized in Table 3.2.

Table 3.2
Operating Probabilities for Each Train of ISBL Plants

Group	Plants	Average Failure Rate per K Hrs	Average Repair Time per Failure, Hr	Unscheduled Outages Hrs/K Hrs	Probability of Running (1)
A	2	0.6948	120.6	83.8	0.9227
B	8, 38, 39	0.3417	50.3	17.5	0.9828
C	3, 4, 5, 6			10.1 (2)	0.9900
D	9	0.2935	79.0	23.2	0.9773
E	11	0.1653	59.3	9.8	0.9903
F	1.4	1.577	24.4	38.4	0.9630
G	10			10.1 (2)	0.9900 (2)

(1) Equal to mean on-stream factor for area grouping, exclusive of scheduled turnaround = 1000/(1000 + average unscheduled outages)

(2) Based on refinery experience

Turnaround Schedule

An average turnaround schedule is presented in Table 3.3

Table 3.3
Turnaround Schedule of ISBL Plants

Plant No.	Description	Turnaround		Plant Group
		Years Between	Duration (weeks)	
1	Coal Cleaning and Handling			*
1.4	Coal Grinding and Drying	2	2	F
2	Coal Liquefaction	1	6	A
3	Gas Plant	3	2	C
4	Naphtha Hydrotreater	2	4	C
5	Gas Oil Hydrotreater	2	4	C
6	Hydrogen Purification	3	2	C
8	Critical Solvent Deashing	3	2	B
9	Hydrogen Production by Coal Gasification	3	3	D
10	Air Separation	3	2	G
11	By-Product Sulfur Recovery	2	2	E
38	Ammonia Recovery	3	2	B
39	Phenol Recovery	3	2	B

* This plant does not impact the overall plant availability because it is decoupled from the rest of the plants by adequate storage.

Computation of Onstream Factor

The results of computation of onsteam factor are shown in Table 3.4 for the base case (First plant). Column (5), the operating probability at design rate for the group, is calculated for groups having spare (A, D and F) trains. A sample calculation is shown in Appendix 1. For groups of plants having no spare, Column (5) equals Column (4).

The onstream factor exclusive of turnarounds for groups B, C. E and G = the product of each item in Column (5) . . . . . Item (6)

The average maximum scheduled shutdown for groups without spares B, C, and D is 3 weeks in 3 years, i.e., 1 week per year or 7 days . . . . . Item (7)

Scheduled production days per year = 365 - Item (7) = 365-7 = 358 days . . . . . Item (8)

The operation days at plant design rate = Item (6) x Item (8) = 322.6 days . . . . . Item (9)

The onstream factor based on calendar days = Item (9) divided by 365 = 322.6 divided by 365= 0.884 = 88.4% . . . . . Item (10)

Table 3.4
Expected Onstream Factor Base Case (First Plant)

(1) Group and Plants	(2) Number of Trains	(3) Turnaround		(4) Probability of Running for each Train	(5) Operating Probability at Design Rate for the Group
		Years between	Duration Wks/Train		
A (2)	5 (1 spare)	1	6	0.9227	0.9415
B (8,38,39)	1	3	2	0.9828	0.9828
C (3,6,4,5)	1	2	4	0.9900	0.9900
D (9)	5 (1 spare)	3	3	0.9773	0.9961
E (11)	4	2	2	0.9903	0.9903
F (1.4)	10 (2 spare)	2	2	0.9630	0.9923
G (10)	5	3	2	0.9900	0.9900

(6) Onstream factor on scheduled production = 0.9010
(7) Average scheduled shut down for groups without spares (B, C, E and G) turnaround days/yr = 7
(8) Scheduled production days per year = 358
(9) Operation days at plant design rate = 322.6
(10) Onstream factor, based on calendar days = 88.4%

4. PLANT 1

4. Plant 1 (Coal Cleaning and Handling)

4.0 Catalyst and Chemical Summary

For this plant the catalyst and chemicals cost is as follows:*

Start up catalyst and chemicals	$200,000
Start up first year requirement of catalyst and chemicals	$606,000

* The catalyst and chemical consumptions were given as dollar figures by the coal preparation and handling specialists.

4.1 On Stream Factor

The onstream facator for this plant is 95+%. However, the onstream factor of this plant does not impact the onstream factor of the overall complex because this plant is decoupled from the rest of the complex by adequate storage.

4.2 Operating Manpower Requirements

The operating manpower requirement for this plant is 48 operators. For full manpower requirements of this plant as well as the complex, refer to Section 38 of this report.

4.3 Plot Area Required

The total plot area required for this palnt is 1500 ft x 1000 ft.

4.4 Capital Cost and Breakdowns (First & Nth Plants)

The field costs and breakdowns for Plant 1 are given below in Table 4.1. Note that field costs for each plant do not include home office costs or contingency. These were estimated for the whole complex and are given in Section 39.

Table 4.1

Plant 1 (Coal Cleaning and Handling)
Field Costs and Breakdowns
2nd Quarter, 1991

Field Costs	**Costs ($MM)**	
Breakdown	First Plant	Nth Plant
Major Equipment	34.8	34.8
Bulk Materials	19.7	19.7
Subcontracts	--	--
Direct Labor	19.2	19.2
Distributables (Indirect)	17.3	17.3
Total Field Costs	**91.0**	**91.0**

5. PLANT 1.4

5. Plant 1.4 - (Coal Grinding and Drying)

5.0 Onstream Factor

The onstream factor for this plant is 97.3%.

5.1 Operating Manpower Requirements

The operating manpower requirement for this plant is 17 operators. For full manpower requirements of this plant as well as the complex, refer to Section 38 of this report.

5.2 Plot Area Required

The plot area required for this plant is 250 ft. x 1800 ft.

5.3 Capital Cost and Breakdowns (First & Nth Plants)

The field costs and breakdowns for Plant 1.4 are given below in Table 5.1. Note that field costs for each plant do not include home office costs or contingency. These were estimated for the whole complex and are given in Section 39.

Table 5.1

Plant 1.4 (Coal Grinding and Drying)
Field Costs and Breakdowns
2nd Quarter, 1991

Field Costs	Costs ($MM)	
Breakdown	First Plant	Nth Plant
Major Equipment	37.8	31.5
Bulk Materials	23.8	19.8
Subcontracts	5.4	4.5
Direct Labor	20.0	16.7
Distributables (Indirect)	18.0	15.0
Total Field Costs	**105.0**	**87.5**

6. PLANT 2

6. Plant 2 (Coal Liquefaction)

6.0 Catalyst and Chemical Summary

Catalyst and chemicals required for Plant 2 are shown below:

Catalyst or Chemical	Amocat-1C, 1-1/2", Extrudate
Quantity required for start up	2,253,000 lb
Consumption	68,130 lb/day

6.1 On-Stream Factor

The expected on-stream factor for the Coal Liquefaction Plant, is 92.3%.

6.2 Operating Manpower Requirements

The operating manpower requirement for this plant is 40 operators. For full manpower requirements of this plant as well as the complex, refer to Section 38 of this report.

6.3 Plot Area Required

The plot area required for the Coal Liquefaction Plant is approximately 750 feet by 1,000 feet.

6.4 Capital Cost and Breakdowns (First & Nth Plants)

The field costs and breakdowns for Plant 2 are given below in Table 6.1. Note that field costs for each plant do not include home office costs or contingency. These were estimated for the whole complex and are given in Section 39.

Table 6.1

Plant 2 (Coal Liquefaction)
Field Costs and Breakdowns
2nd Quarter, 1991

Field Costs	**Costs ($MM)**	
Breakdown	First Plant	Nth Plant
Major Equipment	344.4	287.0
Bulk Materials	279.6	233.0
Subcontracts	20.4	17.0
Direct Labor	249.6	208.0
Distributables (Indirect)	224.6	187.2
Total Field Costs	**1118.6**	**932.2**

7. PLANT 3

7. Plant 3 (Gas Plant)

7.0 Catalyst and Chemical Summary

Catalyst and chemicals required for Plant 3 are shown below:

Catalyst or Chemical	MEA
Quantity required for start up	100 bbl
Consumption	20 gal/day

7.1 On Stream Factor

The on-stream factor for the Gas Plant is expected to be 97.1%

7.2 Operating Manpower Requirements

The operating manpower requirement for this plant is 8 operators. For full manpower requirements of this plant as well as the complex, refer to Section 38 of this report.

7.3 Plot Area Required

The plot area required for the Gas Plant is approximately 300 feet by 350 feet.

7.4 Capital Cost and Breakdowns (First & Nth Plants)

The field costs and breakdowns for Plant 3 are given below in Table 7.1. Note that field costs for each plant do not include home office costs or contingency. These were estimated for the whole complex and are given in Section 39. Because there is no spare train for this first plant, the costs numbers, as shown in the table below, are the same for the first plant and Nth plant.

TABLE 7.1

Plant 3 (Gas Plant)
Field Costs and Breakdowns
2nd Quarter, 1991

Field Costs	**Costs ($MM)**	
Breakdowns	First Plant	Nth Plant
Major Equipment	8.3	8.3
Bulk Materials	5.8	5.8
Subcontracts	0.9	0.9
Direct Labor	5.4	5.4
Distributables (Indirect)	4.9	4.9
Total Field Costs	**25.3**	**25.3**

8. PLANT 4

8. Plant 4 (Naphtha Hydrotr ater)

8.0 Catalyst and Chemical Summary

Catalyst and chemicals requirements for this plant is shown below:

Quantity required for start up	80,000 lb
Estimated catlayst life	3 years

8.1 On Stream Factor

The on-stream factor for the Naphtha Hydrotreater is expected to be 97.1%.

8.2 Operating Manpower Requirements

The operating manpower requirement for this plant is 8 operators. For full manpower requirements of this plant as well as the complex, refer to Section 38 of this report.

8.3 Plot Area Required

The plot area required for the Naphtha Hydrotreater Plant is approximately 150 feet by 200 feet.

8.4 Capital Cost and Breakdowns (First & Nth Plants)

The field costs and breakdowns for Plant 4 are given below in Table 8.1. Note that field costs for each plant do not include home office costs or contingency. These were estimated for the whole complex and are given in Section 39. Because there is no spare train for the first plant, the costs numbers, as shown in Table 8.1 below, or for the first and Nth plant are the same.

TABLE 8.1

Plant 4 (Naphtha Hydrotreater)
Field Costs and Breakdowns
2nd Quarter, 1991

Field Costs	**Costs ($MM)**	
Breakdowns	First Plant	Nth Plant
Major Equipment	5.2	5.2
Bulk Materials	3.5	3.5
Subcontracts	0.5	0.5
Direct Labor	3.4	3.4
Distributables (Indirect)	3.0	3.0
Total Field Costs	**15.6**	**15.6**

9. PLANT 5

9. Plant 5 (Gas Oil Hydrotreater)

9.0 Catalyst and Chemical Summary

Catalyst and chemicals required for Plant 5 are shown below:

Catalyst or Chemical	Catalyst
Quantity required for start up	490,000 lb
Consumption or estimated life	3 year life

9.1 On-Stream Factor

The expected on-stream factor for the Gas Oil Hydrotreater is 97.1%.

9.2 Operating Manpower Requirements

The operating manpower requirement for this plant is 4 operators. For full manpower requirements of this plant as well as the complex, refer to Section 38 of this report.

9.3 Plot Area Required

The plot area required for the Coal Liquefaction Plant is approximately 200 feet by 300 feet.

9.4 Capital Cost and Breakdowns (First & Nth Plants)

The field costs and breakdowns for Plant 5 are given below in Table 9.1. Note that field costs for each plant do not include home office costs or contingency. These were estimated for the whole complex and are given in Section 39. Because there is no spare train for the first plant, the cost numbers, as shown in Table 9.1 below, for the first plant and Nth plant are the same.

TABLE 9.1

Plant 5 (Gas Oil Hydrotreater)
Field Costs and Breakdowns
2nd Quarter, 1991

Field Costs	**Costs ($MM)**	
Breakdowns	First Plant	Nth Plant
Major Equipment	24.8	24.8
Bulk Materials	16.9	16.9
Subcontracts	2.7	2.7
Direct Labor	15.6	15.6
Distributables (Indirect)	14.0	14.0
Total Field Costs	**74.0**	**74.0**

10. PLANT 6

10. Plant 6 (Hydrogen Purification)

10.0 Catalyst and Chemical Summary

The primary chemical used in Plant 6 is monoethanol amine (MEA).

Quantity required for start up	1,200 bbl
Consumption	30 gal/day

10.1 On-Stream Factor

The on-stream factor for the Hydrogen Purification Plant is expected to be 97.1%.

10.2 Operating Manpower Requirements

The operating manpower requirement for this plant is 12 operators. For full manpower requirements of this plant as well as the complex, refer to Section 38 of this report.

10.3 Plot Area Required

The plot area required for the Hydrogen Purification Plant is approximately 300 feet by 350 feet.

10.4 Capital Cost and Breakdowns (First & Nth Plants)

The field costs and breakdowns for Plant 6 are given below in Table 10.1. Note that field costs for each plant do not include home office costs or contingency. These were estimated for the whole complex and are given in Section 39. Because there is no spare train for the first plant, the cost numbers, as shown in Table 10.1 below, for the first plant and Nth plant are the same.

Table 10.1

Plant 6 (Hydrogen Purification)
Field Costs and Breakdowns
2nd Quarter, 1991

Field Costs	**Costs ($MM)**	
Breakdowns	First Plant	Nth Plant
Major Equipment	61.0	61.0
Bulk Materials	31.0	31.0
Subcontracts	3.6	3.6
Direct Labor	30.0	30.0
Distributables (Indirect)	27.0	27.0
Total Field Costs	**152.6**	**152.6**

11. PLANT 8

11. Plant 8 (Critical Solvent D ashing Unit - ROSE-SR)

11.0 Catalyst and Chemical Summary

Catalyst and chemicals required for this plant is shown below:

Catalyst or Chemical	ROSE Solvent
Quantity required for start up	10,000 bbl
Consumption	300 gal/day

11.1 On-Stream Factor

The on-stream factor for the ROSE-SR unit is in excess of 95%.

11.2 Operating Manpower Requirements

The operating manpower requirement for this plant is 9 operators. For full manpower requirements of this plant as well as the complex, refer to Section 38 of this report.

11.3 Plot Area Required

The plot area required for the Critical Solvent Deashing Unit is approximately 75 feet by 150 feet.

11.4 Capital Cost and Breakdowns (First & Nth Plants)

The field costs and breakdowns for Plant 8 are given below in Table 11.1. Note that field costs for each plant do not include home office costs or contingency. These were estimated for the whole complex and are given in Section 39. Because there is no spare train for the first plant, the cost numbers, as shown in Table 11.1 below, for the first plant and Nth plant are the same.

TABLE 11.1

Plant 8 (Critical Solvent Deashing)
Field Costs and Breakdowns
2nd Quarter, 1991

Field Costs	**Costs ($MM)**	
Breakdowns	First Plant	Nth Plant
Major Equipment	13.0	13.0
Bulk Materials	10.0	10.0
Subcontracts	4.0	4.0
Direct Labor	8.0	8.0
Distributables (Indirect)	7.2	7.2
Total Field Costs	**42.2**	**42.2**

12. PLANT 9

12. Plant 9 (Hydrog n Production by Coal Gasification)

12.0 Catalyst and Chemical Summary

Catalyst and chemicals required for Plant 9 are shown below:

Catalyst or Chemical	BASF K8-11 or Haldor Topsoe SSK Catalyst
Quantity required for start up	19,000 ft^3
Consumption	3 year life

12.1 On-Stream Factor

The expected on-stream factors for the various sections of the Coal Gasification complex is 97.7%.

12.2 Operating Manpower Requirements

The operating manpower requirement for this plant is 120 operators. For full manpower requirements of this plant as well as the complex, refer to Section 38 of this report.

12.3 Plot Area Required

The plot area required for the Coal Gasification Plant is approximately 600 feet by 1200 feet.

12.4 Capital Cost and Breakdowns (First & Nth Plants)

The field costs and breakdowns for Plant 9 are given below in Table 12.1. Note that field costs for each plant do not include home office costs or contingency. These were estimated for the whole complex and are given in Section 39.

TABLE 12.1

Plant 9 (Hydrogen Production by Coal Gasification)
Field Costs and Breakdowns
2nd Quarter, 1991

Field Costs	**Costs ($MM)**	
Breakdowns	First Plant	Nth Plant
Major Equipment	97.7	81.5
Bulk Materials	75.3	62.7
Subcontracts	12.7	10.6
Direct Labor	68.7	57.3
Distributables (Indirect)	61.9	51.6
Total Field Costs	**316.3**	**263.7**

13. PLANT 10

13. Plant 10 (Air Separation)

13.0 Catalyst and Chemical Summary

No catalyst or chemicals are used in the air separation plant except for the molecular sieves material which is used for air purification. This is supplied with the packaged units.

13.1 On-Stream Factor

The on-stream factor for an Air Separation Plant is expected to be 97.1%.

13.2 Operating Manpower Requirements

The operating manpower requirement for this plant is 4 operators. For full manpower requirements of this plant as well as the complex, refer to Section 38 of this report.

13.3 Plot Area Required

The plot area required for the Air Separation Plant is approximately 350 feet by 800 feet.

13.4 Capital Cost and Breakdowns (First & Nth Plants)

The field costs and breakdowns for Plant 10 are given below in Table 13.1. Note that field costs for each plant do not include home office costs or contingency. These were estimated for the whole complex and are given in Section 39. Because there is no spare train for the first plant, the cost numbers, as shown in Table 13.1 below, for the first plant and Nth plant are the same.

TABLE 13.1

Plant 10 (Air Separation)
Field Costs and Breakdowns
2nd Quarter, 1991

Field Costs	**Costs ($MM)**	
Breakdowns	First Plant	Nth Plant
Major Equipment	104.0	104.0
Bulk Materials	20.0	20.0
Subcontracts	17.0	17.0
Direct Labor	29.0	29.0
Distributables (Indirect)	21.0	21.0
Total Field Costs	**191.0**	**191.0**

14. PLANT 11

14. Plant 11 (By-Product Sulfur Recovery)

14.0 Catalyst and Chemical Summary

Catalyst and chemicals required for this plant are shown below:

Catalysts	Quantity Required for Start-Up	Consumption
Claus Catalyst Kaiser S-201	18,400 cu.ft.	(5 years)
SCOT Catalyst	6,500 cu.ft.	(5 years)
Packings		
2" SS Pall Rings	2,500 cu.ft.	(3 years)
Chemicals		
MDEA	500 Bbl	50 gpd

14.1 On-Stream Factor

The expected on-stream factor for the Sulfur Plant is 97.1%.

14.2 Operating Manpower Requirements

The operating manpower requirement for this plant is 20 operators. For full manpower requirements of this plant as well as the complex, refer to Section 38 of this report.

14.3 Plot Area Required

The plot area required for the Sulfur Plant is approximately 280 feet by 380 feet. The plot area required for the Sulfur Storage and Loading is 50 feet by 230 feet.

14.4 Capital Cost and Breakdowns (First & Nth Plants)

The field costs and breakdowns for Plant 11 are given below in Table 14.1. Note that field costs for each plant do not include home office costs or contingency. These were estimated for the whole complex and are given in Section 39. Because there is no spare train for the first plant, the cost numbers, as shown in Table 14.1 below, for the first plant and Nth plant are the same.

TABLE 14.1

Plant 11 (By-Product Sulfur Recovery)
Field Costs and Breakdowns
2nd Quarter, 1991

Field Costs	**Costs ($MM)**	
Breakdowns	First Plant	Nth Plant
Major Equipment	15.2	15.2
Bulk Materials	10.4	10.4
Subcontracts	1.8	1.8
Direct Labor	10.2	10.2
Distributables (Indirect)	9.1	9.1
Total Field Costs	**46.7**	**46.7**

15. PLANT 19

15. Plant 19 (Relief and Blowdown Facilities)

15.0 Operating Manpower Requirements

The operating manpower requirement for this plant is 2 operators. For full manpower requirements of this plant as well as the complex, refer to Section 38 of this report.

15.1 Plot Area Required

The area required for this plant is 75 ft. X 100 ft. plus a clear circular area 370 ft. in diameter for each primary flare and 150 ft. in diameter for the H_2S flare.

15.2 Capital Cost and Breakdowns (First & Nth Plants)

The field costs and breakdowns for Plant 19 are given below in Table 15.1. This plant being an OSBL plant, its field costs and breakdowns are the same for the first as well as Nth plant scenarios. Note that field costs for each plant do not include home office costs or contingency. These were estimated for the whole complex and are given in Section 39.

TABLE 15.1

Plant 19 (Relief and Blowdown)
Field Costs and Breakdowns
(First & Nth Plants)
2nd Quarter, 1991

Field Costs and Breakdowns	Costs ($MM)
Major Equipment	2.0
Bulk Materials	1.5
Subcontracts	0.1
Direct Labor	1.4
Distributables (Indirect)	1.3
Total Field Costs	**6.3**

16. Plant 20 (Tankage)

16.0 Operating Manpower Requirements

The operating manpower requirement for this plant is 2 operators. For full manpower requirements of this plant as well as the complex, refer to Section 38 of this report.

16.1 Plot Area Required

The plot area requirement for this plant is 6000 feet x 3000 feet.

16.2 Capital Cost and Breakdowns (First & Nth Plants)

The field costs and breakdowns for Plant 20 are given below in Table 16.2. This plant being an OSBL plant, its field costs and breakdowns are the same for the first as well as Nth plant scenarios. Note that field costs for each plant do not include home office costs or contingency. These were estimated for the whole complex and are given in Section 39.

TABLE 16.1

Plant 20 (Tankage)
Field Costs and Breakdowns
(First & Nth Plants)
2nd Quarter, 1991

Field Costs	Costs ($MM)
Major Equipment	38.0
Bulk Materials	25.5
Subcontracts	3.4
Direct Labor	22.3
Distributables (Indirect)	20.1
Total Field Costs	**109.3**

17. PLANT 21

17. Plant 21 (Interconnecting Piping Systems)

17.0 Capital Cost and Breakdowns (First & Nth Plants)

The field costs and breakdowns for Plant 21 are given below in Table 17.1. This plant being an OSBL plant, its field costs and breakdowns are the same for the first as well as Nth plant scenarios. Note that field costs for each plant do not include home office costs or contingency. These were estimated for the whole complex and are given in Section 39.

TABLE 17.1

Plant 21 (Interconnecting Piping)
Field Costs and Breakdowns
(First & Nth Plants)
2nd Quarter, 1991

Field Costs Breakdown	Costs ($MM)
Major Equipment	--
Bulk Materials	23.5
Subcontracts	4.0
Direct Labor	22.5
Distributables (Indirect)	20.3
Total Field Costs	**70.3**

18. PLANT 22

18. Plant 22 (Product Shipping)

18.0 Operating Manpower Requirements

Product shipping by pipeline is handled as part of the Oil Movement and Storage staff. Thus the manpower requirement for this plant is a fraction of an operator.

18.1 Plot Area Required

The plot area for the equipment listed in this plant is approximately 40 feet by 80 feet.

18.2 Capital Cost and Breakdowns (First & Nth Plants)

The field costs and breakdowns for Plant 22 are given below in Table 18.1. This plant being an OSBL plant, its field costs and breakdowns are the same for the first as well as Nth plant scenarios. Note that field costs for each plant do not include home office costs or contingency. These were estimated for the whole complex and are given in Section 39.

TABLE 18.1

Plant 22 (Product Shipping)
Field Costs and Breakdowns
(First & Nth Plants)
2nd Quarter, 1991

Field Costs Breakdowns	Costs ($MM)
Major Equipment	0.2
Bulk Materials	0.3
Subcontracts	0.1
Direct Labor	0.1
Distributables (Indirect)	0.1
Total Field Costs	**0.8**

19. PLANT 23

19. Plant 23 (Tank Car/Tank Truck Loading)

19.0 Operating Manpower Requirements

The operating manpower requirement for this plant is 2 operators. For full manpower requirements of this plant as well as the complex, refer to Section 38 of this report.

19.1 Plot Area Required

Tank Car Loading

Area Required = 10,000 sqft

Tank Truck Loading

Area Required = 10,000 sqft

19.2 Capital Cost and Breakdowns (First & Nth Plants)

The field costs and breakdowns for Plant 23 are given below in Table 19.1. This plant being an OSBL plant, its field costs and breakdowns are the same for the first as well as Nth plant scenarios. Note that field costs for each plant do not include home office costs or contingency. These were estimated for the whole complex and are given in Section 39.

Table 19.1

Plant 23 (Tank Car/Tank Truck Loading)
Field Costs and Breakdowns
(First & Nth Plants)
2nd Quarter, 1991

Field Costs Breakdown	Costs ($MM)
Major Equipment	2.0
Bulk Materials	3.4
Subcontracts	0.7
Direct Labor	3.2
Distributables (Indirect)	2.9
Total Field Costs	**12.2**

20. PLANT 24

20. Plant 24 (Coal Refuse and Ash Disposal)

20.0 Operating Manpower Requirements

The operating manpower required for this plant is covered by the manpower requirements of Plant 1 and Plant 9.

20.1 Plot Area Required

Description	Area (Acres)
Refuse Conveyor Belt	Included within coal feed conveyor belt right of way
Settling Basin	3
Fine Refuse Slurry Drying Area	30

20.2 Capital Cost and Breakdowns (First & Nth Plants)

The field costs and breakdowns for Plant 24 are given below in Table 20.1. This plant being an OSBL plant, its field costs and breakdowns are the same for the first as well as Nth plant scenarios. Note that field costs for each plant do not include home office costs or contingency. These were estimated for the whole complex and are given in Section 39.

Table 20.1

Plant 24 (Coal Refuse and Ash Disposal)
Field Costs and Breakdowns
(First & Nth Plants)
2nd Quarter, 1991

Field Costs Breakdown	Costs ($MM)
Major Equipment	11.1
Bulk Materials	4.8
Subcontracts	1.5
Direct Labor	6.0
Distributables (Indirect)	5.4
Total Field Costs	**28.8**

21. PLANT 25

21. Plant 25 (Ch mical and Catalyst Handling)

21.0 Catalyst and Chemical Summary

Plant 25 provides storage and handling for chemicals and catalysts used in all the plants. Table 21.1 below summarizes the start-up and consumption rates for the various chemicals or catalysts.

Table 21.1

OVERALL COMPLEX CATALYST AND CHEMICAL SUMMARY

Chemical or Catalyst	For Plant No.	Quantity Required	
		Start-Up	Consumption
Amocat-1C, 1-1/2" Extrudate	2	2,253,000 lb	68,130 lb/day
MEA	3	100 bbl	20 gal/day
Hydrotreating Catalyst	4	80,000 lb	3 year life
Hydrotreating Catalyst	5	490,000 lb	3 year life
MEA	6	1,200 bbl	30 gal/day
Rose Solvent	8	10,000 bbl	300 gal/day
BASF K8-11 or Haldor Topsoe SSK Catalyst	9	19,000 ft^3	3 year life
2" SS Pall Ring Packing	9	3,400 ft^3	3 year life
2" CS Pall Ring Packing	9	4,300 ft^3	3 year life
Methanol	9	2,500 bbl	200 gal/day
Claus Catalyst Kaiser S-201	11	18,400 ft^3	5 year life
SCOT Catalyst	11	6,500 ft^3	5 year life
2" SS Pall Ring Packing	11	2,500 ft^3	3 year life
MDEA	11	500 bbl	50 gal/day

Table 21.1 - Continued
Overall Complex Catalyst and Chemical Summary

Chemical or Catalyst	For Plant No.	Quantity Required: Start-Up	Quantity Required: Consumption
30% Ammonia	31	7,000 lbs	936 lb/day
Sodium Sulfite	31	2,000 lbs	240 lb/day
Polymer & Chelant	31	1,000 lbs	144 lb/day
Disodium Phosphate	31	1,000 lbs	144 lb/day
Alum	32	30,000 lbs	4,680 lb/day
Polymer	32	2,000 lbs	156 lb/day
98% H_2SO_4	32	15,000 gals	15,680 lb/day
50% NaOH	32	30,000 gals	38,754 lb/day
Polymeric Dispersent	32	7,000 lbs	1,624 lb/day
Non-ionic Surfactant	32	300 lbs	24 lb/day
Chlorine	34	2,000 lbs	350 lb/day
Polymer	34	3,000 lbs	450 lb/day
PAC	34	6,000 lbs	2,000 lb/day
Phosphoric Acid as 100% H_3PO_4	38	11,0331 lb	3,460 lb/day
Dephenolization Solvent	39	7,912 lb	170 lb/day

21.1 Operating Manpower Requirements

There is no special manpower requirement for this plant. It is covered by the manpower of other plants located in the same area.

21.2 Plot Area Requirements

The plot area required for this plant is 100 ft. X 60 ft.

21.3 Capital Cost and Breakdowns (First & Nth Plants)

The field costs and breakdowns for Plant 25 are given below in Table 21.2. This plant being an OSBL plant, its field costs and breakdowns are the same for the first as well as Nth plant scenarios. Note that field costs for each plant do not include home office costs or contingency. These were estimated for the whole complex and are given in Section 39.

TABLE 21.2

Plant 25 (Catalyst and Chemicals Handling)
Field Costs and Breakdowns
(First & Nth Plants)
2nd Quarter, 1991

Field Costs Breakdown	Costs ($MM)
Major Equipment	--
Bulk Materials	--
Subcontracts	0.3
Direct Labor	--
Distributables (Indirect)	--
Total Field Costs	**0.3**

22. PLANT 30

22. Plant 30 (Electrical Distribution System)

22.0 Operating Manpower Requirements

There is no dedicated manpower requirement for this plant.

22.1 Capital Cost and Breakdowns (First & Nth Plants)

The field costs and breakdowns for Plant 30 are given below in Table 22.1. Note that the field costs for each plant do not include home office costs or contingency. These were estimated for the whole complex and are given in Section 39.

TABLE 22.1

Plant 30 (Electrical Distribution System)
Field Costs and Breakdowns
(First & Nth Plants)
2nd Quarter, 1991

Field Costs Breakdown	Costs ($MM)
Major Equipment	--
Bulk Materials	41.0
Subcontracts	--
Direct Labor	18.0
Distributables (Indirect)	16.2
Total Field Costs	**75.2**

23. PLANT 31

23. Plant 31 (Steam and Power Generation)

23.0 Catalyst and Chemical Summary

Catalyst and chemicals required for this plant are shown below:

Chemical	Start up quantity	Consumption
30 % Ammonia	7,000 lbs	936 lb/day
Sodium Sulfite	2,000 lbs	240 lb/day
Polymer and Chelant	1,000 lbs	144 lb/day
Disodium Phosphate	1,000 lbs	144 lb/day

23.1 Operating Manpower Requirements

The operating manpower requirement for this plant is 12 operators. For full manpower requirements of this plant as well as the complex, refer to Section 38 of this report.

23.2 Plot Area Required

The plot area required for the Steam and Power Generating Plant is approximately 1,000 feet by 1,400 feet.

23.3 Capital Cost and Breakdowns (First & Nth Plants)

The field costs and breakdowns for Plant 31 are given below in Table 23.1. This plant being an OSBL plant, its field costs and breakdowns are the same for the first as well as the Nth plant scenarios. Note that the field costs for each plant do not include home office costs or contingency. These were estimated for the whole complex and are given in Section 39.

TABLE 23.1

Plant 31 (Steam and Power Generation)
Field Costs and Breakdowns
(First & Nth Plants)
2nd Quarter, 1991

Field Costs Breakdown	**Costs ($MM)**
Major Equipment	180.4
Bulk Materials	33.3
Subcontracts	3.2
Direct Labor	33.2
Distributables (Indirect)	29.9
Total Field Costs	**280.0**

24. PLANT 32

24. Plant 32 (Raw, Cooling and Potable Water)

24.0 Catalyst and Chemical Summary

Catalyst and chemicals required for this plant is shown below:

Chemical	Required for Start up	Consumption
Alum	30,000 lbs	4,680 lb/day
Polymer	2,000 lbs	156 lb/day
98% H_2SO4	15,000 gals	15,680 lb/day
50% NaOH	30,000 gals	38,754 lb/day
Polymeric Dispersion	7,000 lbs	1,624 lb/day
Non-ionic Surfactant		

24.1 Operating Manpower Requirements

The operating manpower requirement for this plant is 4 operators. For full manpower requirements of this plant as well as the complex, refer to Section 38 of this report.

24.2 Plot Area Required

The plot area required for the Raw, Cooling and Potable Water Systems is approximately 200 feet by 1,000 feet plus about 60 acres for raw water storage.

24.3 Capital Cost and Breakdowns (First & Nth Plants)

The field costs and breakdowns for Plant 32 are given below in Table 24.1. This plant being an OSBL plant, its field costs and breakdowns are the same for the first as well as the Nth plant scenarios. Note that the field costs for each plant do not include home office costs or contingency. These were estimated for the whole complex and are given in Section 39.

TABLE 24.1

Plant 32 (Raw, Cooling and Potable Water Systems)

Field Costs and Breakdowns (First & Nth Plants) 2nd Quarter, 1991

Field Costs & Breakdowns	Costs ($MM)
Major Equipment	17.5
Bulk Materials	7.5
Subcontracts	4.9
Direct Labor	6.8
Distributables (Indirect)	6.1
Total Field Costs	**42.8**

25. PLANT 33

25. Plant 33 (Fire Protection Systems)

25.0 Operating Manpower Requirements

The operating manpower requirement for this plant is 5 operators. For full manpower requirements of this plant as well as the complex, refer to Section 38 of this report.

25.1 Plot Area Required

The plot area required for the fire protection systems is approximately 150 feet by 200 feet.

25.2 Capital Cost and Breakdowns (First & Nth Plants)

The field costs and breakdowns for Plant 33 are given below in Table 25.1. This plant being an OSBL plant, its field costs and breakdowns are the same for the first as well as the Nth plant scenarios. Note that the field costs for each plant do not include home office costs or contingency. These were estimated for the whole complex and are given in Section 39.

TABLE 25.1

Plant 33 (Fire Protection Systems)
Field Costs and Breakdowns
(First & Nth Plants)
2nd Quarter, 1991

Field Costs and Breakdowns	Costs ($MM)
Major Equipment	2.7
Bulk Materials	5.3
Subcontracts	0.2
Direct Labor	7.5
Distributables (Indirect)	6.8
Total Field Costs	**22.5**

26. PLANT 34

26. Plant 34 (S wage and Effluent Water Treatment)

26.0 Catalyst and Chemical Summary

Catalyst and chemicals required for this plant is shown below:

Chemical	Required for Start up	Consumption
Chlorine	2,000 lbs	350 lb/day
Polymer	3,000 lbs	450 lb/day
PAC	6,000 lbs	2,000 lb/day

26.1 Operating Manpower Requirements

The operating manpower requirement for this plant is 34 operators. For full manpower requirements of this plant as well as the complex, refer to Section 38 of this report.

26.2 Plot Area Required

The plot area required for the entire Sewage and Effluent Water Treatment Systems is approximately 500 feet by 1,200 feet.

26.3 Capital Cost and Breakdowns (First & Nth Plants)

The field costs and breakdowns for Plant 34 are given below in Table 26.1. This plant being an OSBL plant, its field costs and breakdowns are the same for the first as well as the Nth plant scenarios. Note that the field costs for each plant do not include home office costs or contingency. These were estimated for the whole complex and are given in Section 39.

TABLE 26.1

Plant 34 (Sewage and Effluent Water)
Field Costs and Breakdowns
(First & Nth Plants)
2nd Quarter, 1991

Field Costs and Breakdowns	Costs ($MM)
Major Equipment	7.9
Bulk Materials	10.2
Subcontracts	0.7
Direct Labor	15.1
Distributables (Indirect)	13.6
Total Field Costs	**47.5**

27. PLANT 35

27. Plant 35 (Instrument and Plant Air Facilities)

27.0 Operating Manpower Requirements

There is no special operating manpower allocation for this plant. This is covered by the manpower allocated to the adjacent plant.

27.1 Capital Cost and Breakdowns (First & Nth Plants)

The field costs and breakdowns for Plant 35 are given below in Table 27.1. This plant being an OSBL plant, its field costs and breakdowns are the same for the first as well as the Nth plant scenarios. Note that the field costs for each plant do not include home office costs or contingency. These were estimated for the whole complex and are given in Section 39.

TABLE 27.1

Plant 35 (Instrument and Plant Air Facilities)
Field Costs and Breakdowns
(First & Nth Plants)
2nd Quarter, 1991

Field Costs and Breakdowns	Costs ($MM)
Major Equipment	2.7
Bulk Materials	1.8
Subcontracts	--
Direct Labor	2.5
Distributables (Indirect)	2.3
Total Field Costs	**9.3**

28. PLANT 36

28. Plant 36 (Purge and Flush Oil System)

28.0 Capital Cost and Breakdowns (First & Nth Plants)

The field costs and breakdowns for Plant 36 are given below in Table 28.1. This plant being an OSBL plant, its field costs and breakdowns are the same for the first as well as the Nth plant scenarios. Note that the field costs for each plant do not include home office costs or contingency. These were estimated for the whole complex and are given in Section 39.

TABLE 28.1

Plant 36 (Purge and Flush Oil System)
Field Costs and Breakdowns
(First & Nth Plants)
2nd Quarter, 1991

Field Costs and Beakdowns	Costs ($MM)
Major Equipment	1.0
Bulk Materials	7.0
Subcontracts	--
Direct Labor	3.8
Distributables (Indirect)	3.4
Total Field Costs	**15.2**

29. PLANT 37

29. Plant 37 (Solid Waste Management)

29.0 Operating Manpower Requirements

The operating manpower requirement for this plant is 4 operators. For full manpower requirements of this plant as well as the complex, refer to Section 38 of this report.

29.1 Plot Area Required

The plot area required for the waste bins, hoppers, and dumpsters is included in the appropriate plant.

29.2 Capital Cost and Breakdowns (First & Nth Plants)

The field costs and breakdowns for Plant 37 are given below in Table 29.1. This plant being an OSBL plant, its field costs and breakdowns are the same for the first as well as the Nth plant scenarios. Note that the field costs for each plant do not include home office costs or contingency. These were estimated for the whole complex and are given in Section 39.

TABLE 29.1

Plant 37 (Solid Waste Management)
Field Costs and Breakdowns
(First & Nth Plants)
2nd Quarter, 1991

Field Costs and Breakdowns	Costs ($MM)
Major Equipment	2.4
Bulk Materials	--
Subcontracts	--
Direct Labor	--
Distributables (Indirect)	--
Total Field Costs	**2.4**

30. PLANT 38

30. Plant 38 (Ammonia Recovery)

30.0 Catalyst and Chemical Summary

Catalyst and chemicals required for this plant are shown below:

Catalyst or Chemical	Phosphoric Acid as 100% H_3PO_4
Quantity required for start up	113,331 lb
Consumption	3,460 lb/day

30.1 On-Stream Factor

The expected on-stream factor for the PHOSAM-W Ammonia Recovery Unit is expected to be 96.4%

30.2 Operating Manpower Requirements

The operating manpower requirement for this plant as well as for Phenol Recovery Plant (Plant 39) is 20 operators. For full manpower requirements of this plant as well as the complex, refer to Section 38 of this report.

30.3 Plot Area Required

The plot area required for the Ammonia Recovery Unit is approximately 100 feet by 200 feet.

30.4 Capital Cost and Breakdowns (First & Nth Plants)

The field costs and breakdowns for Plant 38 are given below in Table 30.1. Note that the field costs for each plant do not include home office costs or contingency. These were estimated for the whole complex and are given in Section 39. Because there is no spare train for the first plant, the cost numbers, as shown in Table 30.1 below, for the first plant and Nth plant are the same.

TABLE 30.1

Plant 38 (Ammonia Recovery)
Field Costs and Breakdowns
2nd Quarter, 1991

Field Costs	**Costs ($MM)**	
Breakdowns	First Plant	Nth Plant
Major Equipment	12.4	12.4
Bulk Materials	9.9	9.9
Subcontracts	1.3	1.3
Direct Labor	8.7	8.7
Distributables (Indirect)	7.8	7.8
Total Field Costs	**40.1**	**40.1**

31. PLANT 39

31. Plant 39 (Phenol Recovery)

31.0 Catalyst and Chemical Summary

Catalyst and chemicals required for this plant is shown below:

Catalyst or Chemical	Dephenolization Solvent
Quantity required for start up	7,912 lb
Consumption	170 lb/day

31.1 On-Stream Factor

The expected on-stream factor for the PHOSAM-W Ammonia Recovery Unit is expected to be 96.4%

31.2 Operating Manpower Requirements

The Ammonia Recovery (Plant 38) and Phenol Recovery (Plant 39) are expected to be operated using common operators. Thus the operators included in Plant 38, are required for both plants. For full manpower requirements of this plant as well as the complex, refer to Section 38 of this report.

31.3 Plot Area Required

The plot area required for the Phenol Recovery Unit is approximately 100 feet by 100 feet.

31.4 Capital Cost and Breakdowns (First & Nth Plants)

The field costs and breakdowns for Plant 39 are given below in Table 31.1. Note that the field costs for each plant do not include home office costs or contingency. These were estimated for the whole complex and are given in Section 39. Because there is no spare train for the first plant, the cost numbers, as shown in Table 31.1 below, for the first plant and Nth plant are the same.

TABLE 31.1

Plant 39 (Phenol Recovery)
Field Costs and Breakdowns
2nd Quarter, 1991

Field Costs	**Costs ($MM)**	
Breakdowns	First Plant	Nth Plant
Major Equipment	3.5	3.5
Bulk Materials	3.7	3.7
Subcontracts	0.2	0.2
Direct Labor	3.1	3.1
Distributables (Indirect)	2.8	2.8
Total Field Costs	**13.3**	**13.3**

32. PLANT 40

32. Plant 40 (General Site Preparation)

32.0 Capital Cost and Breakdowns

The field costs and breakdowns for Plant 40 are given below in Table 32.1. This plant being an OSBL plant, its field costs and breakdowns are the same for the first as well as the Nth plant scenarios. Note that the field costs for each plant do not include home office costs or contingency. These were estimated for the whole complex and are given in Section 39.

TABLE 32.1

Plant 40 (General Site Preparation)
Field Costs and Breakdowns
(First & Nth Plants)
2nd Quarter, 1991

Field Costs and Breakdowns	Costs ($MM)
Major Equipment	--
Bulk Materials	--
Subcontracts	75.0
Direct Labor	--
Distributables (Indirect)	--
Total Field Costs	**75.0**

33. PLANT 41

33. Plant 41 (Buildings)

33.0 Capital Cost and Breakdowns (First & Nth Plant)

The field costs and breakdowns for Plant 41 are given below in Table 33.1. This plant being an OSBL plant, its field costs and breakdowns are the same for the first as well as the Nth plant scenarios. Note that the field costs for each plant do not include home office costs or contingency. These were estimated for the whole complex and are given in Section 39.

TABLE 33.1

Plant 41 (Buildings/DCS System)
Field Costs and Breakdowns
(First & Nth Plants)
2nd Quarter, 1991

Field Costs and Breakdowns	Costs ($MM)
Major Equipment	--
Bulk Materials	24.5
Subcontracts	46.0
Direct Labor	--
Distributables (Indirect)	--
Total Field Costs	**70.5**

34. PLANT 42

34. Plant 42 (Telecommunications Systems)

34.0 Capital Costs and Breakdowns (First & Nth Plants)

The field costs and breakdowns for Plant 42 are given below in Table 34.1. This plant being an OSBL plant, its field costs and breakdowns are the same for the first as well as the Nth plant scenarios. Note that the field costs for each plant do not include home office costs or contingency. These were estimated for the whole complex and are given in Section 39.

TABLE 34.1

Plant 42 (Telecommunications Systems)
Field Costs and Breakdowns
(First & Nth Plants)
2nd Quarter, 1991

Field Costs and Breakdowns	Costs ($MM)
Major Equipment	--
Bulk Materials	2.0
Subcontracts	--
Direct Labor	--
Distributables (Indirect)	--
Total Field Costs	**2.0**

35. OVERALL RAW MATERIAL, CATALYST AND CHEMICAL COSTS

35. Overall Raw Material, Catalyst and Chemical Costs (Bas line)

Raw Material

The raw material for this plant is ROM coal. The amount of coal required for the entire complex is 29,036 TPSD (MF basis) and the unit cost is $20.50 (reference Coal Week, March 9, 1992).

Catalyst and Chemicals Costs

The catalyst and chemicals costs for the entire complex are presented in Table 35.1 below. As shown in this table, the costs are presented in two ways; 1) as a part of the variable operating costs, and 2) as a part of the fixed capital costs (initial catalysts and chemicals).

Table 35.1
CATALYSTS AND CHEMICALS COST

Plant Number	Description of Plant	Cost Thousand Dollars	
		(1)	(2)
1	Coal Cleaning and Handling	$406	$301
2	Coal Liquefaction Plant	$71,537	$24,643
3	Gas Plant	$26	$22
4	Naphtha Hydrotreater	$80	$260
5	Gas Oil Hydrotreater	$538	$1,752
6	Hydrogen Purification	$39	$199
8	Critical Solvent Deashing Unit	$89	$379
9	Hydrogen Production by Coal Gasification	$2,091	$6,750
10	Air Separation	$0	$0
11	By-Product Recovery	$803	$1,666
31	Steam and Power Generation	$96	$26
32	Raw Cooling and Potable Water Systems	$3,551	$951
34	Sewage and Effluent Water Treatment	$358	$94
38	Ammonia Recovery	$375	$128
39	Phenol Recovery	$30	$11
	Total	$80,021	$37,185

Note:
(1) Catalysts and chemicals cost per year as a part of variable operating costs
(2) Initial catalyst and chemicals cost as a part of capital costs

36. OVERALL PRODUCT/BY-PRODUCT VALUES

36. Overall Product/By-product Values (Bas line)

Product

The in-depth discussion on product values is included in Subsection 1.2 of this report. The product valuations (expressed as syncrude premium) range from 1.07 to 1.27. The upper (1.27) and lower limits (1.07) will be utilized in the economics section.

The complex is designed to produce 61,943 BPSD of C5+ coal liquids.

By-product

	Production Rate	Price
Sulfur	740.4 STPD	$80/ton
Ammonia	243.7 STPD	$120/ton
Phenol	32.0 STPD	$400/ton
Propane	4407 BPSD	$7.50/bbl
Mixed Butanes	3541 BPSD	$14.50/bbl

37. OVERALL UTILITY UNIT PRICES AND CONSUMPTIONS

37. Ov rall Utility Unit Prices and Consumptions (Baselin)

The overall utility unit prices were included in Section 3.1 and are reiterated below in Table 37.1

Table 37.1

Raw Material and Utility Pricing

Item	Cost
Feed Coal	20.50 (1) $/s. ton
Raw Water	0.10 (2) $/Mgal
Natural Gas	2.00 (3) $/MMBTU

(1) Coal Week, March 9, 1992
(2) Typical price for raw water in Southern Illinois
(3) General consensus between Amoco, Bechtel and DOE/PETC

The utility requirements for the complex are:

Water:	12,042 gpm
Natural gas:	3,510 MM BTU/HR

38. OVERALL LABOR REQUIREMENTS AND RATES

38. Overall Labor R quirements and Rates (Baseline)

38.1 Staffing Plan

The overall staffing plan for the liquefaction complex is based on the following assumptions:

- The complex is operated by a major oil company with support from corporate engineering

  Process plants are divided into 5 areas with dedicated maintenance for each area

- Contract maintenance will be utilized during any plant turn-around and other non-routine maintenance

- Complex is operated from one central house, except for shipping and loading

The staffing plan for the entire complex is shown in various figures. Figure 38.1 is the overall plant management chart. Figures 38.2 through 38.7 respectively present the organization chart and personnel for the 1) laboratory, 2) operations, 3) engineering, 4) environmental health, safety and security, 5) administration and 6) maintenance.

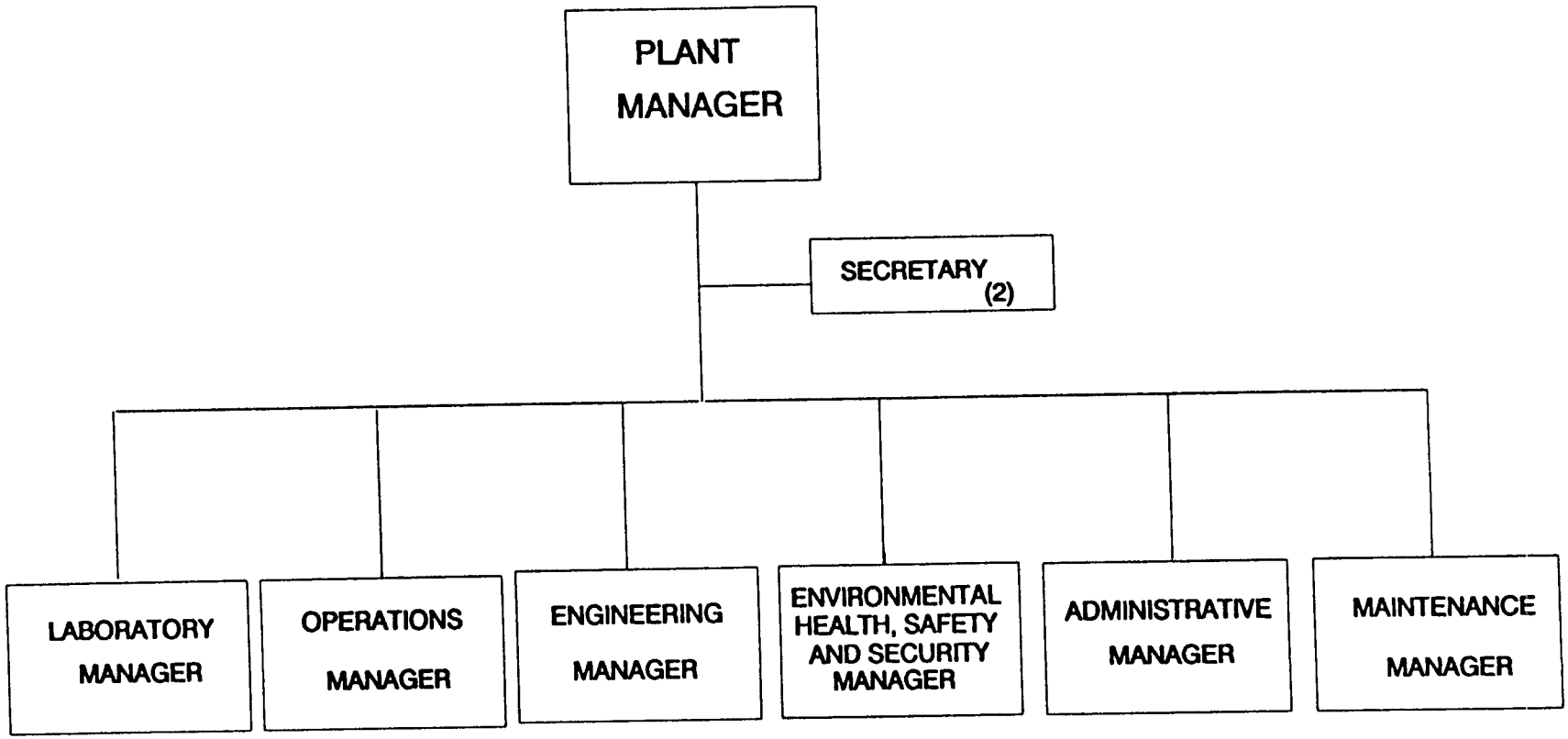

Figure 38.1

OVERALL PLANT ORGANIZATION

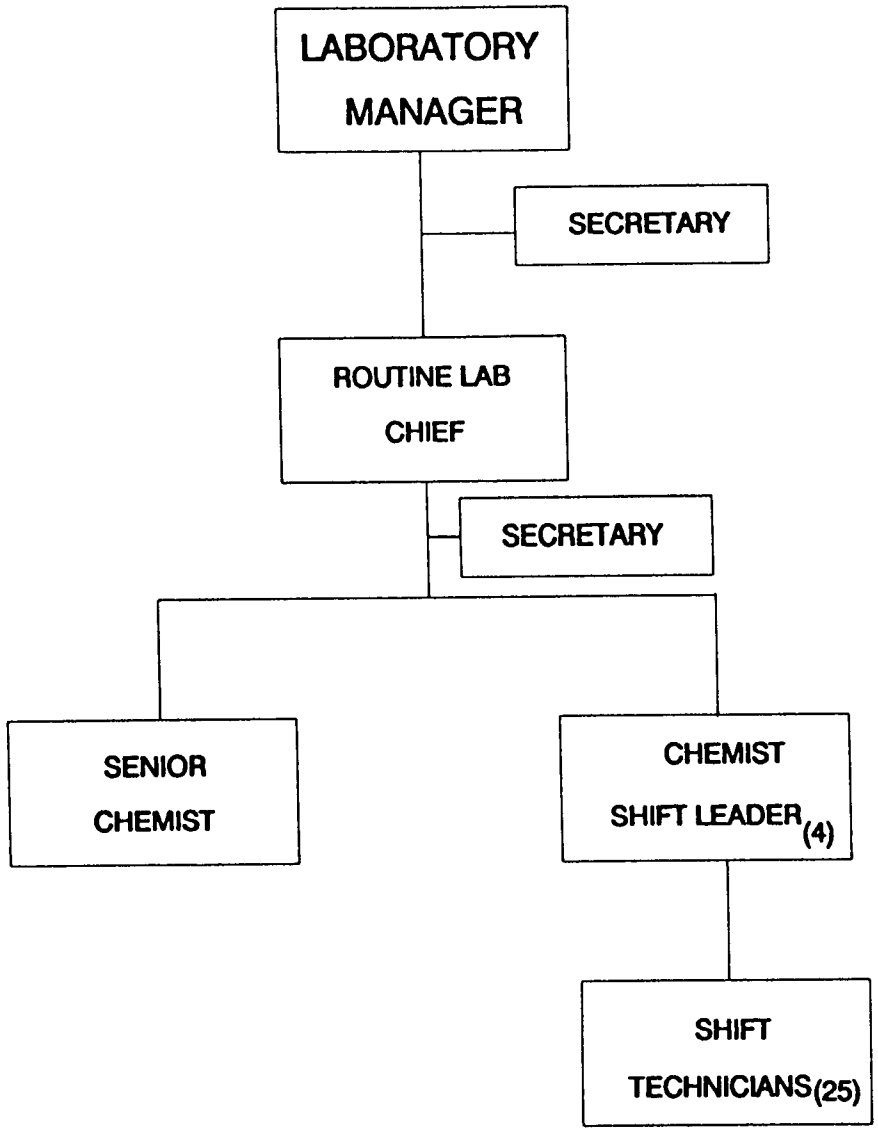

Figur 38.2
LABORATORY ORGANIZATION AND PERSONNEL

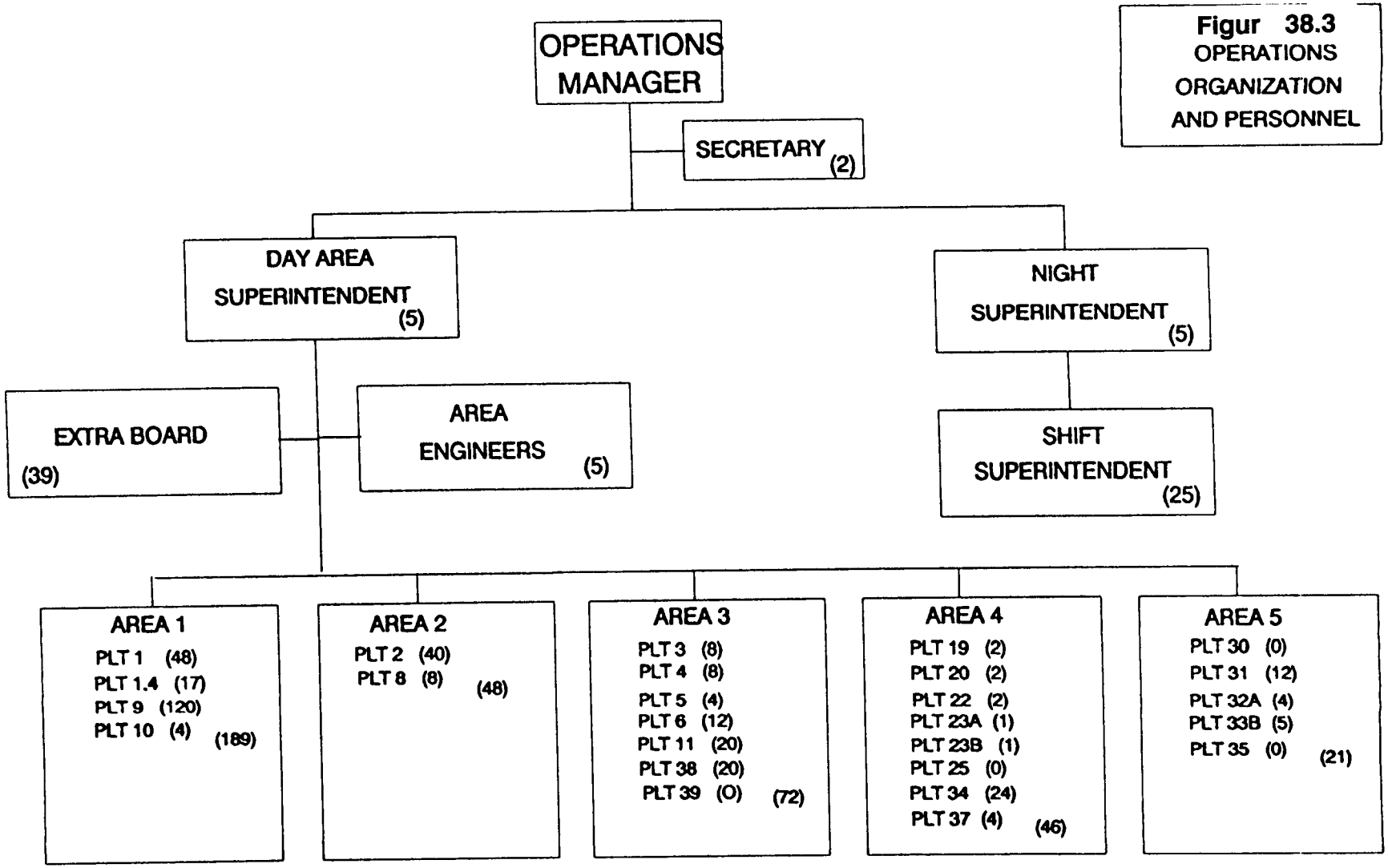

Figur 38.3
OPERATIONS ORGANIZATION AND PERSONNEL

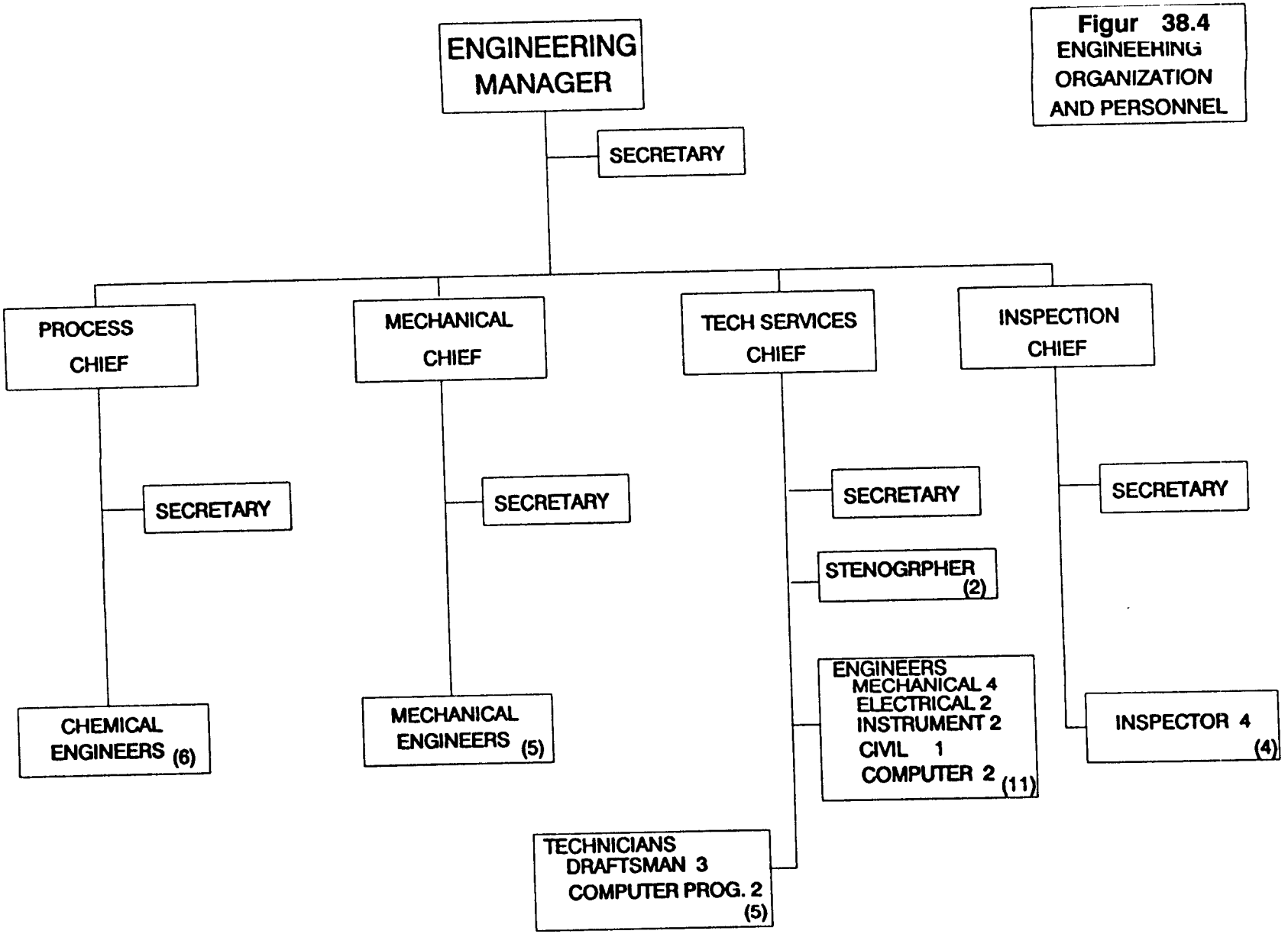

Figur 38.4
ENGINEEHING ORGANIZATION AND PERSONNEL

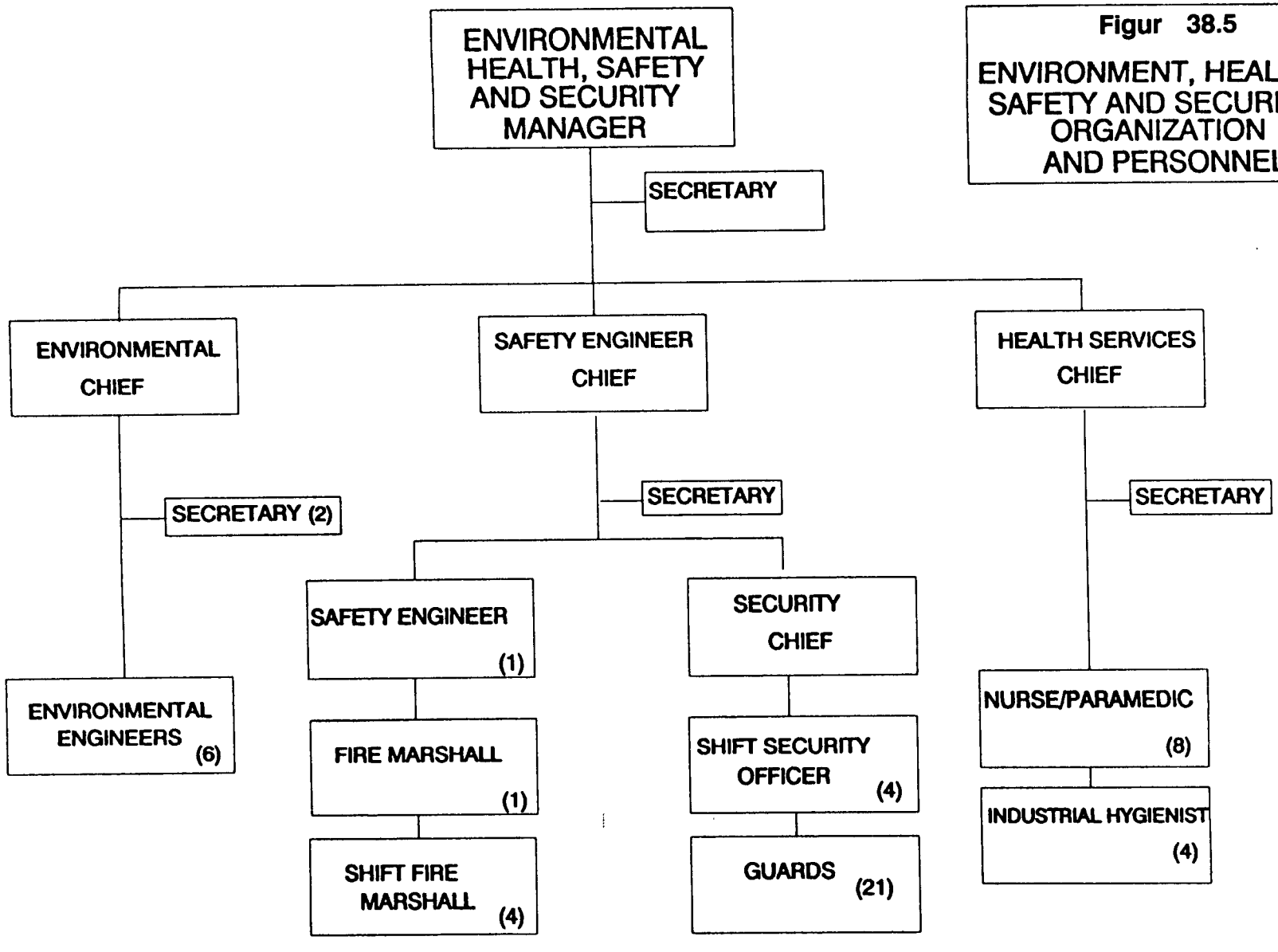

Figur 38.5

ENVIRONMENT, HEALTH, SAFETY AND SECURITY ORGANIZATION AND PERSONNEL

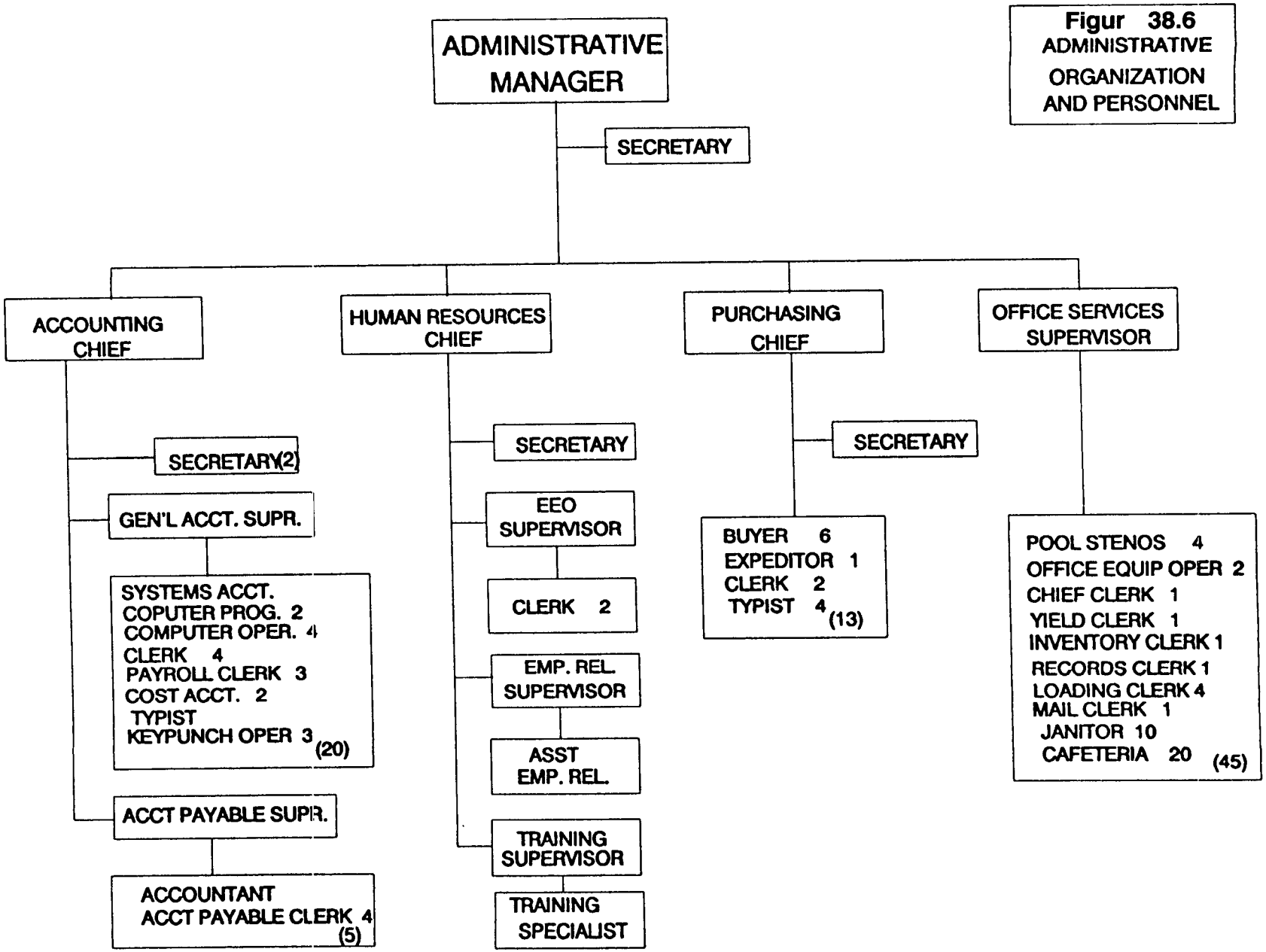

Figur 38.6
ADMINISTRATIVE ORGANIZATION AND PERSONNEL

38.2 Base Wages and Salaries

The base wages and salaries that will be used in the economics section are included in Table 38.1 below.

Table 38.1

Base Wages and Salaries

Category	Annual Salary Dollars
Plant Manager	94,000
Functional Manager	83,000
Shift Leader (Engineers/Chemists)	72,000
Area Supervisor	64,000
Area Engineers	56,000
Engineers	49,600
Adm. Secretary (Plant Manager)	27,000
Adm. Secretary (Functional Manager)	24,000
Secretary	21,500
Crafts	**Hourly Rate Dollars**
Insulators	23.23
Painters	19.30
Plumbers & Gas Fitters	19.20
Sheet Metal Worker	18.55
Steam Fitters	21.59
Boilermakers	21.15
Carpenters	19.41
Electricians	22.17
Masons	19.65

39. FIRST PLANT OVERALL CAPITAL COSTS (BASELINE)

39. First Plant Overall Capital C sts (Baseline)

The First Plant overall capital cost estimates (baseline) for the entire complex are presented in this section. The estimate basis, methodology and accuracy are presented in Section 1.

The inside battery limits (ISBL) and outside battery limits (OSBL) plant field costs and breakdowns are summarized in Sections 39.0 and 39.1 respectively. These same field costs and breakdowns are given in the appropriate capital cost sections of each plant throughout this volume of the report.

Section 39.2 presents the ISBL plants on installed basis. The ISBL installed basis costs includes the following costs:

- Field costs of ISBL plants
- Field costs of OSBL plants
- Home office costs and fees
- A suitable contingency

The above costs, when added together become the total installed cost of the complex. These costs (field costs of OSBL plants, Home office costs and fees and a suitable contingency) have been allocated to the ISBL plants. In this fashion, each ISBL plants cost can now be expressed on "Installed" basis. Such allocation of costs and the resulting installed costs for each plant and for the entire complex are shown in Table 39.2.

Section 39.3 presents the overall plant installed costs of Section 39.2 on an account-by account basis. Table 39.3 includes the overall Home office and fees as well as the contingencies estimated for the total complex.

Obviously, Sections 39.2 and 39.3 present the same bottom line overall installed cost of the complex in two different ways. This installed cost for the First Plant based on second quarter 1991 datum is $3871.7 million dollars. No project escalation is included in this figure for disbursement of this cost over the life of this project. Such escalation will be addressed in the economics section of this volume.

39.0 ISBL Plant Field Cost Summaries

The ISBL plant field costs for the entire complex are developed by estimating the field costs of each process plant. The field cost for each plant is comprised of 1) major equipment, 2) bulk materials, 3) subcontracts, 4) direct labor and 5) distributables. Cost data thus developed are shown in Table 39.0.

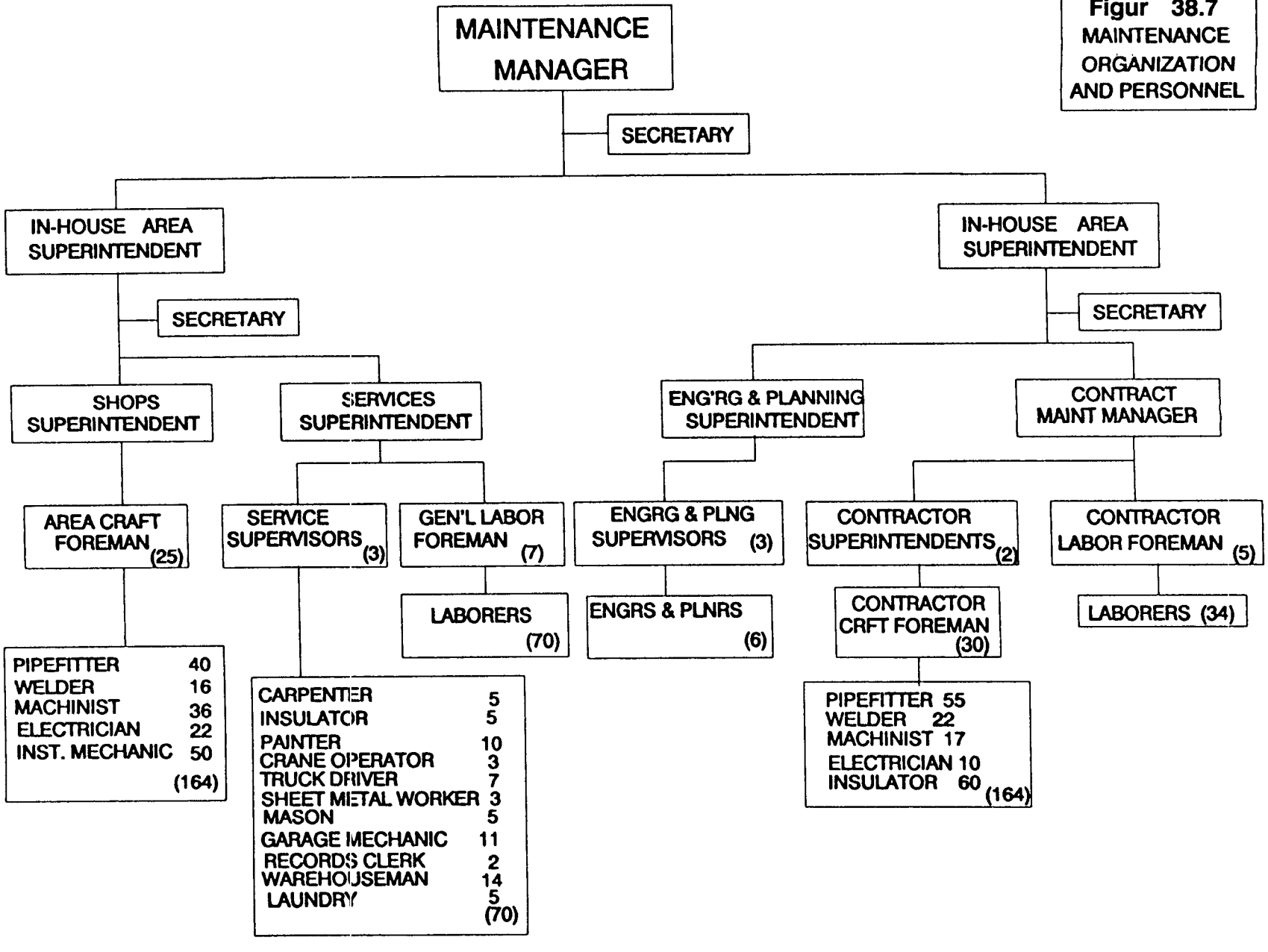

Figur 38.7
MAINTENANCE ORGANIZATION AND PERSONNEL

Table 39.0
Estimated Total Field Costs
for Coal Liquefaction Complex – Process Units (ISBL)
(2nd Quarter 1991 $Million)
First Plant

Plant N .	Process Units	Major Equipment	Bulk Materials	Sub-contracts	Direct Labor	Distribu-tables	Total Field Costs
1	Coal Handling	34.8	19.7	--	19.2	17.3	91.0
1.4	Coal Crushing	37.8	23.8	5.4	20.0	18.0	105.0
2	Coal Liquefaction	344.4	279.6	20.4	249.6	224.6	1118.6
3	Gas Plant	8.3	5.8	0.9	5.4	4.9	25.3
4	Naphtha Hydro.	5.2	3.5	0.5	3.4	3.0	15.6
5	Gas Oil Hydro.	24.8	16.9	2.7	15.6	14.0	74.0
6	H_2 Purification	61.0	31.0	3.6	30.0	27.0	152.6
8	ROSE Unit	13.0	10.0	4.0	8.0	7.2	42.2
9	H_2 From Coal	97.7	75.3	12.7	68.7	61.9	316.3
10	Air SEP	104.0	20.0	17.0	29.0	21.0	191.0
11	Sulfur Plant	15.2	10.4	1.8	10.2	9.1	46.7
38	NH3 Recovery	12.4	9.9	1.3	8.7	7.8	40.1
39	Phenol 11	3.5	3.7	0.2	3.1	2.8	13.3
	TOTALS	762.1	509.6	70.5	470.9	418.6	2231.7

Spare Plants = 2 spare plants for plant 1.4, 1 spare plant for plant 2 and 1 spare plant for plant 9

39.1 OSBL Plant Field Cost Summaries

The OSBL plant field costs for the entire complex are developed by estimating the field costs of each offsite/utilities plant. The field cost for each plant is comprised of 1) major equipment, 2) bulk materials, 3) subcontracts, 4) direct labor and 5) distributables. Results thus obtained are shown in Table 39.1.

Table 39.1

Estimated Total Fi ld Costs
for Coal Liquefaction Complex – Offsites/Utilities (OSBL)
(2nd Quarter 1991 $Million)
First Plant

Plant N .	Offsite Units	Major Equipment	Bulk Materials	Sub-contracts	Direct Labor	Distribu-tables	Total Field Costs
19	Relief & Blowdown	2.0	1.5	0.1	1.4	1.3	6.3
20	Tankage	38.0	25.5	3.4	22.3	20.1	109.3
21	Interconn. Piping	--	23.5	4.0	22.5	20.3	70.3
22	Product Shipping	0.2	0.3	0.1	0.1	0.1	0.8
23	Tank Car/Truck	2.0	3.4	0.7	3.2	2.9	12.2
24	Ash Disposal	11.1	4.8	1.5	6.0	5.4	28.8
25	Catalyst & Chemicals	--	--	0.3	--	--	0.3
30	Electrical Distribution	--	41.0	--	18.0	16.2	75.2
31	Steam & Power	180.4	33.3	3.2	33.2	29.9	280.0
32	Water	17.5	7.5	4.9	6.8	6.1	42.8
	SUBTOTALS	251.2	140.8	18.2	113.5	102.3	626.0

Spare Plants = None

Tabl 39.1 – continued

Estimated Total Field Costs
for Coal Liquefaction Complex – Offsites/Utilities (OSBL)
(2nd Quarter 1991 $Million)
First Plant

Plant No.	Offsite Units	Major Equipment	Bulk Materials	Sub-contracts	Direct Labor	Distribu-tables	Total Field Costs
33	Fire Protection	2.7	5.3	0.2	7.5	6.8	22.5
34	Sewage	7.9	10.2	0.7	15.1	13.6	47.5
35	Instr/Plant Air	2.7	1.8	--	2.5	2.3	9.3
36	Flush Oil	1.0	7.0	--	3.8	3.4	15.2
37	Solid Waste	2.4	--	--	--	--	2.4
40	Site Dev.	--	--	75.0	--	--	75.0
41	Buildings/DCS	--	24.5	46.0	--	--	70.5
42	Telecomm	--	2.0	--	--	--	2.0
	TOTALS FROM PAGE 1	251.2	140.8	18.2	113.5	102.3	626.0
	GRAND TOTAL	267.9	191.6	140.1	142.4	128.4	870.4

Spare plants = None

39.2 ISBL Installed Plant Costs

ISBL installed plant costs for the complex were calculated by 1) taking the estimated ISBL plant cost for each ISBL plant, 2) adding to that the respective proportional amount of total OSBL costs and then 3) adding the proportional amount of home offices, engineering fee and contingency. Results are shown in Table 39.2. This table also includes the number of trains (operating and total number) for each plant.

Table 39.2

ISBL Installed Plant Costs

CAPITAL COST FOR THE COMPLEX BASE LINE FOR THE FIRST PLANT					
Plant #	Number of Operating Train	Total Number of Train	ISBL Plant Field Costs 1000$	ISBL Plant Adj. With OSBL Costs 1000$	Installed Plant Costs 1000$
1	5	5	91000	126400	157800
1.4	10	12	105000	146000	182100
2	5	6	1118600	1554900	1940700
3	1	1	25300	35100	43800
4	1	1	15600	21700	27100
5	1	1	74000	102800	128300
6	1	1	152600	212200	264800
8	1	1	42200	58700	73300
9	5	6	316300	440000	548700
10	5	5	191000	265500	331400
11	4	4	46700	64900	81000
38	1	1	40100	55800	69600
39	1	1	13300	18500	23100
TOTAL			2231700	3102500	3871700

39.3 Overall Plant Costs

The overall plant costs and account-by-account breakdowns are summarized in Table 39.3.

Table 39.3

ESTIMATED OVERALL COST SUMMARY FOR COAL LIQUEFACTION COMPLEX

FIRST PLANT

(2ND QUARTER, 1991 $MILLION)

Item	1st Plant
Major Equipment	1029.8
Bulk Materials	701.2
Subcontracts	210.6
Direct Labor	613.3
Subtotal Direct Cost	2554.9
Distributable Costs	547.0
Subtotal Indirect Costs	547.0
Total Field Cost (Direct & Indirect)	**3101.9**
Home Office & Fee	327.9
Contingency	441.9
Total Plant Costs	**3871.7**

40. NTH PLANT OVERALL CAPITAL COSTS (BASELINE)

40. Nth Plant Ov rall Capital C sts (Baseline)

The Nth plant overall capital cost estimates (baseline) for the entire complex are presented in this section. The estimate basis, methodology and accuracy are presented in Section 1.

The inside battery limits (ISBL) and outside battery limits (OSBL) plant field costs and breakdowns are summarized in Sections 40.0 and 40.1 respectively. These same field costs and breakdowns are given in the appropriate capital cost sections of each plant throughout this volume of the report.

Section 40.2 presents the ISBL plants on installed basis. The ISBL installed basis costs includes the following costs:

- Field costs of ISBL plants
- Field costs of OSBL plants
- Home office costs and fees
- A suitable contingency

The above costs, when added together become the total installed cost of the complex. These costs (field costs of OSBL plants, Home office costs and fees and a suitable contingency) have been allocated to the ISBL plants. In this fashion, each ISBL plants cost can now be expressed on "Installed" basis. Such allocation of costs and the resulting installed costs for each plant and for the entire complex are shown in Table 40.2.

Section 40.3 presents the overall plant installed costs of Section 40.2 on an account-by account basis. Table 40.3 includes the overall Home office and fees as well as the contingencies estimated for the total complex.

Obviously, Sections 40.2 and 40.3 present the same bottom line overall installed cost of the complex in two different ways. This installed cost for the Nth Plant based on second quarter 1991 datum is $3491.2 million dollars. No project escalation is included in this figure for disbursement of this cost over the life of this project. Such escalation will be addressed in the economics section of this volume.

40.O ISBL Plant Field Cost Summaries

The ISBL plant field costs for the entire complex are developed by estimating the field costs of each process plant. The field cost for each plant is comprised of 1) major equipment, 2) bulk materials, 3) subcontracts, 4) direct labor and 5) distributables. Costs data thus developed are shown in Table 40.1.

Tabl 40.1
Estimat d Total Fi ld Costs
for Coal Liqu faction Complex – Pr cess Units (ISBL)
(2nd Quart r 1991 $Milli n)
Nth Plant

Plant N .	Process Units	Major Equipment	Bulk Materials	Sub-contracts	Direct Labor	Distribu-tables	Total Field Costs
1	Coal Handling	34.8	19.7	--	19.2	17.3	91.0
1.4	Coal Crushing	31.5	19.8	4.5	16.7	15.0	87.5
2	Coal Liquefaction	287.0	233.0	17.0	208.0	187.2	932.2
3	Gas Plant	8.3	5.8	0.9	5.4	4.9	25.3
4	Naphtha Hydrog.	5.2	3.5	0.5	3.4	3.0	15.6
5	Gas\Oil Hydro.	24.8	16.9	2.7	15.6	14.0	74.0
6	H_2 Purification	61.0	31.0	3.6	30.0	27.0	152.6
8	ROSE Unit	13.0	10.0	4.0	8.0	7.2	42.2
9	H_2 From Coal	81.5	62.7	10.6	57.3	51.6	263.7
10	Air SEP	104.0	20.0	17.0	29.0	21.0	191.0
11	Sulfur Plant	15.2	10.4	1.8	10.2	9.1	46.7
38	NH3 Recovery	12.4	9.9	1.3	8.7	7.8	40.1
39	Phenol 11	3.5	3.7	0.2	3.1	2.8	13.3
	TOTALS	682.2	446.4	64.1	414.6	367.9	1975.2

Spare Plants = None

40.1 OSBL Plant Field Cost Summaries

The OSBL plant field costs for the entire complex are developed by estimating the field costs of each offsite/utilities plant. The field cost for each plant is comprised of 1) major equipment, 2) bulk materials, 3) subcontracts, 4) direct labor and 5) distributables. Results thus obtained are shown in Table 40.2.

Table 40.2
Estimated Total Fi ld Costs
for Coal Liquefaction Complex – Offsites/Utilities (OSBL)
(2nd Quarter 1991 $Milli n)
Nth Plant

Plant N .	Offsite Units	Major Equipment	Bulk Materials	Sub-contracts	Direct Labor	Distribu-tables	Total Field Costs
19	Relief & Blowdown	2.0	1.5	0.1	1.4	1.3	6.3
20	Tankage	38.0	25.5	3.4	22.3	20.1	109.3
21	Interconn. Piping	--	23.5	4.0	22.5	20.3	70.3
22	Product Shipping	0.2	0.3	0.1	0.1	0.1	0.8
23	Tank Car/Truck	2.0	3.4	0.7	3.2	2.9	12.2
24	Ash Disposal	11.1	4.8	1.5	6.0	5.4	28.8
25	Catalyst & Chemicals	--	--	0.3	--	--	0.3
30	Electrical Distribution	--	41.0	--	18.0	16.2	75.2
31	Steam & Power	180.4	33.3	3.2	33.2	29.9	280.0
32	Water	17.5	7.5	4.9	6.8	6.1	42.8
	SUBTOTALS	251.2	140.8	18.2	113.5	102.3	626.0

Spare Plants = None

Tabl 40.2 – continued

Estimated Total Fi ld Costs
f r Coal Liqu facti n Complex – Offsites/Utilities (OSBL)
(2nd Quarter 1991 $Million)
Nth Plant

Plant No.	Offsite Units	Major Equipment	Bulk Materials	Sub-contracts	Direct Labor	Distribu-tables	Total Field Costs
33	Fire Protection	2.7	5.3	0.2	7.5	6.8	22.5
34	Sewage	7.9	10.2	0.7	15.1	13.6	47.5
35	Instr/Plant Air	2.7	1.8	--	2.5	2.3	9.3
36	Flush Oil	1.0	7.0	--	3.8	3.4	15.2
37	Solid Waste	2.4	--	--	--	--	2.4
40	Site Dev.	--	--	75.0	--	--	75.0
41	Buildings/DCS	--	24.5	46.0	--	--	70.5
42	Telecomm	--	2.0	--	--	--	2.0
	TOTALS FROM PAGE 1	251.2	140.8	18.2	113.5	102.3	626.0
	GRAND TOTAL	267.9	191.6	140.1	142.4	128.4	870.4

Spare plants = None

40.2 ISBL Installed Plant Costs

ISBL installed plant costs for the complex were calculated by 1) taking the estimated ISBL plant cost for each ISBL plant, 2) adding to that the respective proportional amount of total OSBL costs and then 3) adding the proportional amount of home offices, engineering fee and contingency. Results are shown in Table 40.3. This table also includes the number of trains (operating and total number) for each plant.

Table 40.3

ISBL Installed Plant Costs

CAPITAL COST FOR THE COMPLEX BASE LINE FOR THE NTH PLANT					
Plant #	Number of Operating Train	Total Number of Train	ISBL Plant Field Costs 1000$	ISBL Plant Adj. With OSBL Costs 1000$	Installed Plant Costs 1000$
1	5	5	91000	131000	160800
1.4	10	10	87500	126000	154600
2	5	5	932200	1343000	1647800
3	1	1	25300	36400	44700
4	1	1	15600	22500	27600
5	1	1	74000	106500	130700
6	1	1	152600	220000	269800
8	1	1	42200	60800	74600
9	5	5	263700	380000	465900
10	5	5	191000	275000	337700
11	4	4	46700	67200	82500
38	1	1	40100	57800	71000
39	1	1	13300	19200	23500
	TOTAL		1975200	2845400	3491200

40.3 Overall Plant Costs

The overall plant costs and acount-by-account breakdowns are summarized in Table 40.4 below.

Table 40.4

Overall Cost Summary
For Coal Liquefaction Complex

Nth PLANT

(2ND QUARTER, 1991 $MILLION)

Item	Nth Plant
Major Equipment	950.1
Bulk Materials	638.0
Subcontracts	204.2
Direct Labor	557.0
Subtotal Direct Cost	2349.3
Distributable Costs	496.3
Subtotal Indirect Costs	496.3
Total Field Cost (Direct & Indirect)	**2845.6**
Home Office & Fee	240.5
Contingency	405.1
Total Plant Costs	**3491.2**

41. OPTION 1

41. Option 1 (Liquefaction F ed Coal Cleaning by Heavy Media Separation)

41.0 Capital Costs (First & Nth Plants)

The total installed cost for each option (Options 1 through 6) was re-estimated from the baseline estimates by replacing the cost of the directly affected baseline plant with the cost of the optional plant. All other cost modifications impacting the indirectly affected plants were done using the cost vs capacity correlations.

Thus the installed costs reported in the last column of Tables 41.1 and 41.1 for the First & Nth plant scenarios are those for the entire complex operating in the option one mode.

For this option the directly affected plant is the coal cleaning and handling plant (Plant 1).

Table 41.1

Capital Costs (First Plant)

CAPITAL COST FOR THE COMPLEX
OPTION 1 FOR THE FIRST PLANT

Plant #	Number of Operating Train	Total Number of Train	ISBL Plant Field Costs 1000$	ISBL Plant Adj. With OSBL Costs 1000$	Installed Plant Costs 1000$
1	5	5	127600	175100	218600
1.4	10	12	102500	140700	175600
2	5	6	1060000	1455200	1816300
3	1	1	25300	34700	43300
4	1	1	15600	21400	26700
5	1	1	74000	101500	126700
6	1	1	152600	209600	261600
8	1	1	36700	50400	62900
9	5	6	369000	506600	632200
10	5	5	191000	262200	327300
11	4	4	58300	80100	100000
38	1	1	40100	55000	68600
39	1	1	13300	18200	22700
	TOTAL		2266000	3110700	3882500

Table 41.2

Capital Costs (Nth Plant)

CAPITAL COST FOR THE COMPLEX OPTION 1 FOR THE NTH PLANT					
Plant #	Number of Operating Train	Total Number of Train	ISBL Plant Field Costs 1000$	ISBL Plant Adj. With OSBL Costs 1000$	Installed Plant Costs 1000$
1	5	5	127600	175100	214800
1.4	10	10	85400	117300	143900
2	5	5	883300	1212700	1487900
3	1	1	25300	34700	42600
4	1	1	15600	21400	26300
5	1	1	74000	101500	124600
6	1	1	152600	209600	257100
8	1	1	36700	50400	61900
9	5	5	263600	361800	443900
10	5	5	191000	262200	321800
11	4	4	46700	64100	78600
38	1	1	40100	55000	67500
39	1	1	13300	18200	22300
	TOTAL		1955200	2684000	3293200

41.2 D lta Op rating Requirements

In general the operating requirements are 1) labor, 2) raw materials, 3) catalyst and chemicals, and 4) utilities. In calculating the operating requirements for any option (except Options 3, 6 and 7) it was assumed that the labor and catalyst and chemicals requirement remained the same as in the base case. So the delta operating requirements for this option * consist of raw materials and utilities. These are shown below:

Delta Raw Materials:

Feed Coal: 412 TPSD

Delta Utilities:

Water: 2 gpm

Natural gas: (38)** MM BTU/HR.

---

* Defined as the requirements for the option minus the requirements for the base case.

** ( ) Indicates negative quantity

42. OPTION 2

42. Option 2 (Liquefaction Feed Coal Cleaning by Spherical Agglom ration)

42.0 Capital Costs (First & Nth Plants)

The total installed cost for each option (Options 1 through 6) was re-estimated from the baseline estimates by replacing the cost of the directly affected baseline plant with the cost of the optional plant. All other cost modifications impacting the indirectly affected plants were done using the cost vs capacity correlations.

Thus the installed costs reported in the last column of Tables 42.1 and 42.2 for the First & Nth plant scenarios are those for the entire complex operating in the option two mode.

For this option the directly affected plant is the coal cleaning and handling plant (Plant 1).

Table 42.1

Option 2

CAPITAL COST FOR THE COMPLEX
OPTION 2 FOR THE FIRST PLANT

Plant #	Number of Operating Train	Total Number of Train	ISBL Plant Field Costs 1000$	ISBL Plant Adj. With OSBL Costs 1000$	Installed Plant Costs 1000$
1	5	5	368900	506400	632000
1.4	10	12	101500	139400	173900
2	5	6	967300	1327900	1657400
3	1	1	25300	34700	43300
4	1	1	15600	21400	26700
5	1	1	73900	101500	126700
6	1	1	152600	209600	261600
8	1	1	27600	37800	47200
9	5	6	369000	506600	632200
10	5	5	191000	262200	327300
11	4	4	58300	80100	100000
38	1	1	39900	54800	68400
39	1	1	13200	18100	22600
	TOTAL		2404100	3300500	4119300

Table 42.2

Option 2

CAPITAL COST FOR THE COMPLEX OPTION 2 FOR THE NTH PLANT					
Plant #	Number of Operating Train	Total Number of Train	ISBL Plant Field Costs 1000$	ISBL Plant Adj. With OSBL Costs 1000$	Installed Plant Costs 1000$
1	5	5	368900	506400	621300
1.4	10	10	84600	116100	142500
2	5	5	806100	1106600	1357700
3	1	1	25300	34700	42600
4	1	1	15600	21400	26300
5	1	1	74000	101500	124600
6	1	1	152600	209600	257100
8	1	1	27500	37800	46400
9	5	5	263600	361800	444000
10	5	5	191000	262300	321800
11	4	4	46700	64100	78600
38	1	1	39900	54800	67200
39	1	1	13200	18100	22200
	TOTAL		2109000	2895200	3552300

42.1 D lta Operating Requirements

In general the operating requirements are 1) labor, 2) raw materials, 3) catalyst and chemicals, and 4) utilities. In calculating the operating requirements for any option (except Options 3, 6 and 7) it was assumed that the labor and catalyst and chemicals requirement remained the same as in the base case. So the delta operating requirements for this option * consist of raw materials and utilities. These are shown below:

Delta Raw Materials:

Feed Coal:	(888)** TPSD

Delta Utilities:

Water:	874 gpm
Natural gas:	846 MM BTU/HR.

---

* Defined as the requirements for the option minus the requirements for the base case.

** ( ) Indicates negative quantity

43. OPTION 3

43. Option 3 (Thermal-Catalytic Liquefaction Reactor Configuration)

43.0 Capital Costs (First & Nth Plants)

The total installed cost for each option (Options 1 through 6) was re-estimated from the baseline estimates by replacing the cost of the directly affected baseline plant with the cost of the optional plant. All other cost modifications impacting the indirectly affected plants were done using the cost vs capacity correlations.

Thus the installed costs reported in the last column of Tables 43.1 and 43.2 for the First & Nth plant scenarios are those for the entire complex operating in the option three mode.

For this option the directly affected plant is the coal liquefaction plant (Plant 2).

Table 43.1

Option 3

CAPITAL COST FOR THE COMPLEX OPTION 3 FOR THE FIRST PLANT					
Plant #	Number of Operating Train	Total Number of Train	ISBL Plant Field Costs 1000$	ISBL Plant Adj. With OSBL Costs 1000$	Installed Plant Costs 1000$
1	5	5	86600	118900	148400
1.4	10	12	105000	144100	179900
2	7	8	1139200	1563900	1952000
3	1	1	23800	32600	40700
4	1	1	12900	17700	22000
5	1	1	64800	88900	111000
6	1	1	161400	221600	276600
8	1	1	53700	73700	91900
9	5	6	311500	427700	533800
10	5	5	190700	261900	326800
11	4	4	43800	60100	75100
38	1	1	39800	54600	68200
39	1	1	13200	18100	22600
	TOTAL		2246400	3083800	3849000

Table 43.2

Option 3

CAPITAL COST FOR THE COMPLEX OPTION 3 FOR THE NTH PLANT					
Plant #	Number of Operating Train	Total Number of Train	ISBL Plant Field Costs 1000$	ISBL Plant Adj. With OSBL Costs 1000$	Installed Plant Costs 1000$
1	5	5	86600	118900	145900
1.4	10	10	87500	120100	147300
2	7	7	996800	1368400	1679000
3	1	1	23800	32600	40100
4	1	1	12900	17700	21700
5	1	1	64800	88900	109100
6	1	1	161400	221600	271900
8	1	1	53700	73700	90400
9	5	5	259600	356400	437300
10	5	5	190700	261900	321300
11	4	4	43800	60100	73800
38	1	1	39800	54600	67000
39	1	1	13200	18100	22200
	TOTAL		2034600	2793000	3427000

43.1 D lta Operating Requir ments

The operating requirements are 1) labor, 2, raw materials, 3) catalyst and chemicals, and 4) utilities. In this option there is no significant change in catalyst and chemicals requirement. There is, however, a change in the number of operators required and changes in raw materials and utilities requirements. The change in number of operators requirement is due to the increase in number of trains for Plant 2 from 5 for the baseline to 7 for this option. These changes are shown below as delta requirements for this option* :

Delta Operators: 21

Delta Raw Materials:

Feed Coal: (2,279)** TPSD

Delta Utilities:
Water: (151)** gpm
Natural gas: (162)** mm BTU/hr.

---

* Defined as the requirement for the option mimus the requirements for the base case.

** ( ) Indicates negative quantity

44. OPTION 4

44. Option 4 (Catalytic-Catalytic Reactor Configuration with Vent Gas S paration)

44.0 Capital Costs (First & Nth Plants)

The total installed cost for each option (Options 1 through 6) was re-estimated from the baseline estimates by replacing the cost of the directly affected baseline plant with the cost of the optional plant. All other cost modifications impacting the indirectly affected plants were done using the cost vs capacity correlations.

Thus the installed costs reported in the last column of Tables 44.1 and 44.2 for the First & Nth plant scenarios are those for the entire complex operating in the option four mode.

Table 44.1

Option 4

CAPITAL COST FOR THE COMPLEX OPTION 4 FOR THE FIRST PLANT					
Plant #	Number of Operating Train	Total Number of Train	ISBL Plant Field Costs 1000$	ISBL Plant Adj. With OSBL Costs 1000$	Installed Plant Costs 1000$
1	5	5	90900	124800	155800
1.4	10	12	105000	144100	179900
2	5	6	1118600	1535600	1916700
3	1	1	25300	34700	43300
4	1	1	15600	21400	26700
5	1	1	74000	101500	126700
6	1	1	152600	209600	261500
8	1	1	42200	58000	72400
9	5	6	316300	434200	541900
10	5	5	191000	262200	327300
11	4	4	46700	64100	80000
38	1	1	40100	55100	68800
39	1	1	13300	18300	22800
TOTAL			2231600	3063600	3823800

Table 44.2

Option 4

CAPITAL COST FOR THE COMPLEX OPTION 4 FOR THE NTH PLANT					
Plant #	Number of Operating Train	Total Number of Train	ISBL Plant Field Costs 1000$	ISBL Plant Adj. With OSBL Costs 1000$	Installed Plant Costs 1000$
1	5	5	90900	124900	153200
1.4	10	10	87500	120100	147300
2	5	5	932200	1279700	1570100
3	1	1	25300	34700	42600
4	1	1	15600	21400	26300
5	1	1	74000	101500	124600
6	1	1	152600	209500	257100
8	1	1	42200	58000	71100
9	5	5	263600	361800	444000
10	5	5	191000	262200	321800
11	4	4	46700	64100	78600
38	1	1	40100	55100	67600
39	1	1	13300	18300	22400
TOTAL			1975000	2711300	3326700

44.1 Delta Operating R quirements

In general the operating requirements are 1) labor, 2) raw materials, 3) catalyst and chemicals, and 4) utilities. In calculating the operating requirements for any option (except Options 3, 6 and 7) it was assumed that the labor and catalyst and chemicals requirement remained the same as in the base case. Since the operating requirements for this option are the same as the baseline, the delta operating requirements for this option are zero.

45. OPTION 5

45. Option 5 (Fluid Coking of Vacuum Bottoms)

45.0 Capital Costs (First & Nth Plants)

The total installed cost for each option (Options 1 through 6) was re-estimated from the baseline estimates by replacing the cost of the directly affected baseline plant with the cost of the optional plant. All other cost modifications impacting the indirectly affected plants were done using the cost vs capacity correlations.

Thus the installed costs reported in the last column of Tables 45.1 and 45.2 for the First & Nth plant scenarios are those for the entire complex operating in the option five mode.

Table 45.1

Option 5

CAPITAL COST FOR THE COMPLEX OPTION 5 FOR THE FIRST PLANT					
Plant #	Number of Operating Train	Total Number of Train	ISBL Plant Field Costs 1000$	ISBL Plant Adj. With OSBL Costs 1000$	Installed Plant Costs 1000$
1	5	5	80000	109900	137200
1.4	10	12	105000	144100	179900
2	5	6	1118600	1535600	1916600
3	1	1	21100	28900	36100
4	1	1	12900	17700	22000
5	1	1	61700	84800	105800
6	1	1	134400	184500	230300
8-02	1	1	161100	221100	276000
9	5	6	261300	358800	447800
10	5	5	164900	226400	282600
11	4	4	39500	54200	67600
38	1	1	37800	51900	64700
39	1	1	13100	18000	22500
	TOTAL		2211400	3035900	3789100

Table 45.2

Option 5

CAPITAL COST FOR THE COMPLEX OPTION 5 FOR THE NTH PLANT					
Plant #	Number of Operating Train	Total Number of Train	ISBL Plant Field Costs 1000$	ISBL Plant Adj. With OSBL Costs 1000$	Installed Plant Costs 1000$
1	5	5	80000	109900	134800
1.4	10	10	87500	120100	147300
2	5	5	932200	1279700	1570100
3	1	1	21100	28900	35500
4	1	1	12900	17700	21700
5	1	1	61700	84800	104000
6	1	1	134400	184500	226400
8	1	1	161100	221100	271300
9	5	5	217800	299000	366800
10	5	5	164900	226400	277800
11	4	4	39500	54200	66500
38	1	1	37800	51900	63700
39	1	1	13100	18000	22100
	TOTAL		1964000	2696200	3308000

45.1 D lta Operating Requir ments

In general the operating requirements are 1) labor, 2) raw materials, 3) catalyst and chemicals, and 4) utilities. In calculating the operating requirements for any option (except Options 3, 6 and 7) it was assumed that the labor and catalyst and chemicals requirement remained the same as in the base case. So the delta operating requirements for this option * consist of raw materials and utilities. These are shown below:

Delta Raw Materials:

Feed Coal: (5,615)** TPSD

Delta Utilities:

Water: (1871)** gpm
Natural gas: (899)** MM BTU/HR.

---

* Defined as the requirements for the option minus the requirements for the base case.

** ( ) Indicates negative quantity

46. OPTION 6

46. Option 6 (Steam Reforming of Natural Gas Plus FBC Unit for Hydrogen Production)

46.0 Capital Costs (First & Nth Plants)

The total installed cost for each option (Options 1 through 6) was re-estimated from the baseline estimates by replacing the cost of the directly affected baseline plant with the cost of the optional plant. All other cost modifications impacting the indirectly affected plants were done using the cost vs capacity correlations.

Thus the installed costs reported in the last column of Tables 46.1 and 46.2 for the First & Nth plant scenarios are those for the entire complex operating in the option six mode.

For this option the directly affected plants are Plant 9, Air Separation Plant, (Plant 10) and the additional FBC plant (in Plant 31.4-01) for the ROSE-SR bottoms. For this option, as discussed earlier, the air separation plant is not a part of this complex.

Table 46.1

Option 6

CAPITAL COST FOR THE COMPLEX OPTION 6 FOR THE FIRST PLANT					
Plant #	Number of Operating Train	Total Number of Train	ISBL Plant Field Costs 1000$	ISBL Plant Adj. With OSBL Costs 1000$	Installed Plant Costs 1000$
1	5	5	75800	101600	129700
1.4	10	12	105000	140600	179600
2	5	6	1118400	1498500	1913400
3	1	1	25200	33800	43200
4	1	1	15600	20900	26700
5	1	1	74000	99100	126500
6	1	1	152400	204200	260700
8	1	1	42200	56600	72200
9-01	3	3	204300	273800	349600
11	4	4	29300	39300	50200
38	1	1	37900	50800	64800
39	1	1	16500	22100	28200
	TOTAL		1896600	2541300	3244800

Table 46.2

Option 6

CAPITAL COST FOR THE COMPLEX OPTION 6 FOR THE NTH PLANT					
Plant #	Number of Operating Train	Total Number of Train	ISBL Plant Field Costs 1000$	ISBL Plant Adj. With OSBL Costs 1000$	Installed Plant Costs 1000$
1	5	5	75800	101600	124600
1.4	10	10	87500	117200	143800
2	5	5	932000	1248700	1532200
3	1	1	25200	33800	41500
4	1	1	15600	20900	25600
5	1	1	74000	99100	121600
6	1	1	152400	204200	250500
8	1	1	42200	56600	69400
9-01	3	3	204300	273700	335900
11	4	4	29300	39300	48200
38	1	1	37900	50800	62300
39	1	1	16500	22100	27100
TOTAL			1692700	2268000	2782700

46.2 Delta Operating Requirements

The operating requirements are 1) labor, 2) raw materials, 3) catalyst and chemicals, and 4) utilities. In calculating the operating requirements for any option (except Options 3, 6 and 7) it was assumed that the labor and catalyst and chemicals requirement remained the same as in the base case. For this option there is a significant change in the overall configuration of the system. This has caused changes, not only in raw materials and utilities, but also in the number of operators required. So the delta operating requirements for this option * consist of raw materials and utilities and operating labor. These are shown below:

Delta Operators:	(107**)
Delta Raw Materials:	
Feed Coal:	(7,659)** TPSD
Natural gas:	7,291 MM BTU/HR.
Delta Utilities:	
Water:	4,566 gpm
Natural gas:*	(445)** MM BTU/HR.
Electricity Power Produced	21.645 MW

* Note that this figure is for the utility portion of the natural gas consumption. There is an additional consumption of natural gas in Plant 9-01 (Hydrogen Production by Natural Gas Reforming Plant). This amount is shown above as a Delta Raw Material consumption.

---

* Defined as the requirements for the option minus the requirements for the base case.

** ( ) Indicates negative quantity.

47. OPTION 7

47. Option 7 (Naphtha Reformering)

47.0 Capital Costs (First & Nth Plants)

The total installed cost for this was estimated from the baseline estimates by replacing the cost of the directly affected baseline plant with the cost of the optional plant. All other cost modifications impacting the indirectly affected plants were done using the cost vs capacity correlations.

Thus the installed costs reported in the last column of Tables 47.1 and 47.2 for the First & Nth plant scenarios are those for the entire complex operating in the option seven mode.

For this option the directly affected plant is the Naptha Reformer (Plant 7).

Table 47.1

Option 7

CAPITAL COST FOR THE COMPLEX
OPTION 7 FOR THE FIRST PLANT

Plant #	Number of Operating Train	Total Number of Train	ISBL Plant Field Costs 1000$	ISBL Plant Adj. With OSBL Costs 1000$	Installed Plant Costs 1000$
1	5	5	89300	122700	153100
1.4	10	12	105000	144100	179900
2	5	6	1118600	1535600	1916600
3	1	1	25800	35400	44200
4	1	1	15600	21400	26700
5	1	1	73900	101500	126700
6	1	1	161600	221800	276800
7	1	1	30700	42100	52600
8	5	6	42200	58000	72400
9	5	5	298100	409200	510700
10	4	4	180800	248200	309700
11	1	1	45600	62600	78100
38	1	1	39500	54200	67700
39	1	1	13300	18300	22800
	TOTAL		2240000	3075100	3838000

Table 47.2

Option 7

CAPITAL COST FOR THE COMPLEX OPTION 7 FOR THE NTH PLANT					
Plant #	Number of Operating Train	Total Number of Train	ISBL Plant Field Costs 1000$	ISBL Plant Adj. With OSBL Costs 1000$	Installed Plant Costs 1000$
1	5	5	89300	122600	150500
1.4	10	10	87500	120100	147300
2	5	5	932200	1279700	1570100
3	1	1	25800	35400	43400
4	1	1	15600	21400	26300
5	1	1	73900	101500	124600
6	1	1	161600	221800	272100
7	1	1	30700	42100	51700
8	1	1	42200	58000	71100
9	5	5	248400	341000	418400
10	5	5	180800	248200	304500
11	4	4	45600	62600	76800
38	1	1	39500	54300	66600
39	1	1	13300	18300	22400
	TOTAL		1986400	2727000	3345800

47.1 Delta Op rating Requirem nts

The operating requirements for this option are 1) labor, 2) raw materials, 3) catalyst and chemicals, and 4) utilities. These are shown below as delta requirementrs for this option*.

Delta Operators:	11
Delta Raw Materials:	
Feed Coal:	(857)** TPSD

Delta Catalyst:

Additional catalyst requirements for this option are due to includion of naphtha reformer plant, (Plant 7). The catalyst requirements were estimated based on the proprietory catalyst cost information. The estimated catalysts costs are shown below:

Initial charge, MM$	3.11
Annual cost MM$	0.22

Delta Utilities:

Water:	(334) ** gpm
Natural gas:	232 MM BTU/HR.

* Defined as the requirements for the option minus the requirements for the base case.

** ( ) Indicates negative quantity

48. ECONOMICS

48. Economics

The economic analysis to determine the Crude Oil Equivalent price (COE) in $/bbl was carried out by using the LOTUS 1-2-3 based spreadsheet model developed by Amoco. There were several key assumptions made in carrying out this analysis.

48.1 Key Assumptions

Project Start Date	January, 1992
Years of construction	4
Years of operation	25
Depreciation, Years	10
Maintenance, % initial capital	1
Working capital, % revenue	10
Working capital, % liquid	50
Owner's cost, % initial capital first year operation	5
Bank interest rate	8
Federal income tax rate, %	34
Percent equity	25
Percent IRR on equity	15
General inflation %	3
Raw material price escalation	same as general inflation of 3%
State Tax	0
SCP	1.07

48.2 Results

The results of the economic analysis are presented separately for the baseline and baseline with all seven options. Such results are shown in Tables 48.1 through 48.8, respectively. They were obtained at 15% IRR on equity. Each of these two tables have three sections. These are: 1) Model Input Section (based on overall plant material balance), 2) Input Data Relating to Key Assumptions, Construction, Schedules, and Feed And Product Costs, and 3) Results Summary.

As shown in Table 48.1, the improved baseline requires an equivalent crude oil price of $38.55/bbl. The Crude Oil Equivalent price for all seven options are summarized in Table 48.9.

Table 48.1
Economic Analysis of the Baseline Case

Model Input (based on overall plant material balance)

ROM coal feed rate, MTSD[1]	29.0
Coal cleaning refuse rate, MTSD[1]	5.8
Ash production rate, MTSD[1]	2.8
Natural Gas rate, MMMBTU/SD	84.24
Electricity purchase, MEGA-WH/SD	0.00
Raw water make-up, MMGSD	17.3
Naphtha production, MBSD	19.20
Light Distillate production, MBSD	7.80
Heavy Distillate Production, MBSD	21.64
Gas oil production, MBSD	13.31
Liquid propane production, MBSD	4.41
Mixed Butanes production, MBSD	3.54
Ammonia production, MTSD[1]	0.24
Phenol production, MTSD[1]	0.03
Sulfur production, MTSD[1]	0.74
Number of operators/boardmen	415
Total installed capital, $MM (E-yr)	3491.2 Mid-1991 $

TABLE 48.1 - continued

Input data relating to key assumptions, construction schedule, and feed and product costs

Total installed capital, $MM (base year)	3543.2
Operating Factor, percent	88.4
Percent plant operational, 1st yr.	100.0
Percent plant operational, 2nd yr.	100.0
Percent Plant operational, 3rd yr.	100.0
Refuse Disposal Cost, $/S-ton (base yr)	2.00
Ash Disposal cost, $S-ton (base yr)	5.00
Catalyst & Chemicals f(prod), $MM/MBSD (base yr)	1.29*
Operator pay rate, $/op./hr. (base yr)	20.50
Overhead factor (benefits, etc)	1.40
Other labor costs, $MM/yr (base yr)	15.86
Maintenance, taxes & insurance % init. cap.	1.00
Sales, Admin., Research, $MM/yr (base yr)	0.0
Percent capital 1st yr. construction	20.0
Percent capital 2nd yr. construction	30.0
Percent capital 3rd yr. construction	30.0
Percent capital 4th yr. construction	20.0
Working capital percent revenue	10.0
Percent liquid of working cap.	50.0
Owner's cost, % init. cap., 1st yr op.	5.00
ROM coal price, $/S-ton (base yr)	20.50
Natural gas price, $/MMBTU (base yr)	2.00
Electricity price, $/KWH (base yr)	0.050
Raw water, $/MGAL (base yr)	0.10
General inflation, percent/yr	3.00
Constr. cost index (CCI), %/yr	3.00
Coal escalation+, percent/yr	3.00
Crude oil escalation+, percent/yr	3.00
Natural gas escalation+, percent/yr	3.00
Naphtha syncrude prem.	1.07
Naphtha price, $BBL (base yr)	0.00
Light distillate syncrude prem.	1.04

TABLE 48.1 - continued

Light distillate price, $/BBL (base yr)	0.00
Heavy distillate syncrude prem	1.09
Heavy distillate price, $BBL (base yr)	0.00
Gas oil syncrude prem.	1.04
Gas oil price, $/BBL (base yr)	0.00
Liquid propane price, $/BBL (base yr)	7.50
Mixed butane price, $/BBL (base yr)	14.50
Ammonia price, $S-ton (base yr)	120.00
Mixed Phenol price, $/S-ton (base yr)	400.00
Sulfur price, $/short-ton (base yr)	80.00
Construction start = Jan 1 (base yr)	1992
Percent equity	25
Imputed interest rate, %/yr	0.00
Bank interest rate, percent/yr	8.00
Federal income tax rate, %/yr	34.00
State income tax rate, %/yr	0.00
Fixed cost, % init. cap. (0 = not used)	0.00
Term of loan, years (fixed)	10
Years of construction (fixed	4
Years of operation (fixed)	25
Depreciation, years (fixed)	10

Result Summary

Base year	1992
Total Capital	$3543.2 MM
Syn Crude Premium	1.07
Crude Oil Equivalent (PADD II)	38.55 $/BBL (base yr)

(1) Rates are in 1000 short tons per stream day

Note:

M= 1000X
MM = 1000 X M
MMM = 1000 X MM

* Calculated value
\+ Inflation included

Table 48.2
Economic Analysis for Option 1

Model Input (based on overall plant material balance)

ROM coal feed rate, MTSD[1]	29.4
Coal cleaning refuse rate, MTSD[1]	6.8
Ash production rate, MTSD[1]	2.3
Natural Gas rate, MMMBTU/SD	83.33
Electricity purchase, MEGA-WH/SD	0.00
Raw water make-up, MMGSD	17.3
Naphtha production, MBSD	19.20
Light Distillate production, MBSD	7.80
Heavy Distillate Production, MBSD	21.64
Gas oil production, MBSD	13.31
Liquid propane production, MBSD	4.41
Mixed Butanes production, MBSD	3.54
Ammonia production, MTSD[1]	0.24
Phenol production, MTSD[1]	0.03
Sulfur production, MTSD[1]	0.74
Number of operators/boardmen	415
Total installed capital, $MM (E-yr)	3293.2 Mid-1991 $

TABLE 48.2 - continued

Input data relating to key assumptions, construction schedule, and feed and product costs

Total installed capital, $MM (base year)	3342.2
Operating Factor, percent	88.4
Percent plant operational, 1st yr.	100.0
Percent plant operational, 2nd yr.	100.0
Percent Plant operational, 3rd yr.	100.0
Refuse Disposal Cost, $/S-ton (base yr)	2.00
Ash Disposal cost, $S-ton (base yr)	5.00
Catalyst & Chemicals f(prod), $MM/MBSD (base yr)	1.29*
Operator pay rate, $/op./hr. (base yr)	20.50
Overhead factor (benefits, etc)	1.40
Other labor costs, $MM/yr (base yr)	15.86
Maintenance, taxes & insurance % init. cap.	1.00
Sales, Admin., Research, $MM/yr (base yr)	0.0
Percent capital 1st yr. construction	20.0
Percent capital 2nd yr. construction	30.0
Percent capital 3rd yr. construction	30.0
Percent capital 4th yr. construction	20.0
Working capital percent revenue	10.0
Percent liquid of working cap.	50.0
Owner's cost, % init. cap., 1st yr op.	5.00
ROM coal price, $/S-ton (base yr)	20.50
Natural gas price, $/MMBTU (base yr)	2.00
Electricity price, $/KWH (base yr)	0.050
Raw water, $/MGAL (base yr)	0.10
General inflation, percent/yr	3.00
Constr. cost index (CCI), %/yr	3.00
Coal escalation+, percent/yr	3.00
Crude oil escalation+, percent/yr	3.00
Natural gas escalation+, percent/yr	3.00
Naphtha syncrude prem.	1.07
Naphtha price, $BBL (base yr)	0.00
Light distillate syncrude prem.	1.04

TABLE 48.2 - continued

Light distillate price, $/BBL (base yr)	0.00
Heavy distillate syncrude prem	1.09
Heavy distillate price, $BBL (base yr)	0.00
Gas oil syncrude prem.	1.04
Gas oil price, $/BBL (base yr)	0.00
Liquid propane price, $/BBL (base yr)	7.50
Mixed butane price, $/BBL (base yr)	14.50
Ammonia price, $S-ton (base yr)	120.00
Mixed Phenol price, $/S-ton (base yr)	400.00
Sulfur price, $/short-ton (base yr)	80.00
Construction start = Jan 1 (base yr)	1992
Percent equity	25
Imputed interest rate, %/yr	0.00
Bank interest rate, percent/yr	8.00
Federal income tax rate, %/yr	34.00
State income tax rate, %/yr	0.00
Fixed cost, % init. cap. (0 = not used)	0.00
Term of loan, years (fixed)	10
Years of construction (fixed	4
Years of operation (fixed)	25
Depreciation, years (fixed)	10

Result Summary

Base year	1992
Total Capital	$3342.2 MM
Syn Crude Premium	1.07
Crude Oil Equivalent (PADD II)	37.25 $/BBL (base yr)

(1) Rates are in 1000 short tons per stream day

Note:

M= 1000X
MM = 1000 X M
MMM = 1000 X MM

* Calculated value
\+ Inflation included

Table 48.3
Economic Analysis for Option 2

Model Input (based on overall plant material balance)

ROM coal feed rate, MTSD[1]	28.9
Coal cleaning refuse rate, MTSD[1]	7.1
Ash production rate, MTSD[1]	1.4
Natural Gas rate, MMMBTU/SD	104.54
Electricity purchase, MEGA-WH/SD	0.00
Raw water make-up, MMGSD	18.6
Naphtha production, MBSD	19.20
Light Distillate production, MBSD	7.80
Heavy Distillate Production, MBSD	21.64
Gas oil production, MBSD	13.31
Liquid propane production, MBSD	4.41
Mixed Butanes production, MBSD	3.54
Ammonia production, MTSD[1]	0.24
Phenol production, MTSD[1]	0.03
Sulfur production, MTSD[1]	0.74
Number of operators/boardmen	415
Total installed capital, $MM (E-yr)	3552.3 Mid-1991 $

TABLE 48.3 - continued

Input data relating to key assumptions, construction schedule, and feed and product costs

Total installed capital, $MM (base year)	3605.0
Operating Factor, percent	88.4
Percent plant operational, 1st yr.	100.0
Percent plant operational, 2nd yr.	100.0
Percent Plant operational, 3rd yr.	100.0
Refuse Disposal Cost, $/S-ton (base yr)	2.00
Ash Disposal cost, $S-ton (base yr)	5.00
Catalyst & Chemicals f(prod), $MM/MBSD (base yr)	1.29*
Operator pay rate, $/op./hr. (base yr)	20.50
Overhead factor (benefits, etc)	1.40
Other labor costs, $MM/yr (base yr)	15.86
Maintenance, taxes & insurance % init. cap.	1.00
Sales, Admin., Research, $MM/yr (base yr)	0.0
Percent capital 1st yr. construction	20.0
Percent capital 2nd yr. construction	30.0
Percent capital 3rd yr. construction	30.0
Percent capital 4th yr. construction	20.0
Working capital percent revenue	10.0
Percent liquid of working cap.	50.0
Owner's cost, % init. cap., 1st yr op.	5.00
ROM coal price, $/S-ton (base yr)	20.50
Natural gas price, $/MMBTU (base yr)	2.00
Electricity price, $/KWH (base yr)	0.050
Raw water, $/MGAL (base yr)	0.10
General inflation, percent/yr	3.00
Constr. cost index (CCI), %/yr	3.00
Coal escalation+, percent/yr	3.00
Crude oil escalation+, percent/yr	3.00
Natural gas escalation+, percent/yr	3.00
Naphtha syncrude prem.	1.07
Naphtha price, $BBL (base yr)	0.00
Light distillate syncrude prem.	1.04

TABLE 48.3 - continued

Light distillate price, $/BBL (base yr)	0.00
Heavy distillate syncrude prem	1.09
Heavy distillate price, $BBL (base yr)	0.00
Gas oil syncrude prem.	1.04
Gas oil price, $/BBL (base yr)	0.00
Liquid propane price, $/BBL (base yr)	7.50
Mixed butane price, $/BBL (base yr)	14.50
Ammonia price, $S-ton (base yr)	120.00
Mixed Phenol price, $/S-ton (base yr)	400.00
Sulfur price, $/short-ton (base yr)	80.00
Construction start = Jan 1 (base yr)	1992
Percent equity	25
Imputed interest rate, %/yr	0.00
Bank interest rate, percent/yr	8.00
Federal income tax rate, %/yr	34.00
State income tax rate, %/yr	0.00
Fixed cost, % init. cap. (0 = not used)	0.00
Term of loan, years (fixed)	10
Years of construction (fixed	4
Years of operation (fixed)	25
Depreciation, years (fixed)	10

Result Summary

Base year	1992
Total Capital	$3605.0 MM
Syn Crude Premium	1.07
Crude Oil Equivalent (PADD II)	39.50 $/BBL (base yr)

(1) Rates are in 1000 short tons per stream day

Note:

M= 1000X
MM = 1000 X M
MMM = 1000 X MM

* Calculated value
\+ Inflation included

Table 48.4
Economic Analysis for Option 3

Model Input (based on overall plant material balance)

ROM coal feed rate, MTSD[1]	26.8
Coal cleaning refuse rate, MTSD[1]	5.4
Ash production rate, MTSD[1]	2.6
Natural Gas rate, MMMBTU/SD	80.35
Electricity purchase, MEGA-WH/SD	0.00
Raw water make-up, MMGSD	17.1
Naphtha production, MBSD	15.01
Light Distillate production, MBSD	6.26
Heavy Distillate Production, MBSD	18.36
Gas oil production, MBSD	11.17
Liquid propane production, MBSD	5.39
Mixed Butanes production, MBSD	3.09
Ammonia production, MTSD[1]	0.28
Phenol production, MTSD[1]	0.03
Sulfur production, MTSD[1]	0.68
Number of operators/boardmen	436
Total installed capital, $MM (E-yr)	3427.0 Mid-1991 $

TABLE 48.4 - continued

Input data relating to key assumptions, construction schedule, and feed and product costs

Total installed capital, $MM (base year)	3478.0
Operating Factor, percent	88.4
Percent plant operational, 1st yr.	100.0
Percent plant operational, 2nd yr.	100.0
Percent Plant operational, 3rd yr.	100.0
Refuse Disposal Cost, $/S-ton (base yr)	2.00
Ash Disposal cost, $S-ton (base yr)	5.00
Catalyst & Chemicals f(prod), $MM/MBSD (base yr)	1.58*
Operator pay rate, $/op./hr. (base yr)	20.50
Overhead factor (benefits, etc)	1.40
Other labor costs, $MM/yr (base yr)	15.86
Maintenance, taxes & insurance % init. cap.	1.00
Sales, Admin., Research, $MM/yr (base yr)	0.0
Percent capital 1st yr. construction	20.0
Percent capital 2nd yr. construction	30.0
Percent capital 3rd yr. construction	30.0
Percent capital 4th yr. construction	20.0
Working capital percent revenue	10.0
Percent liquid of working cap.	50.0
Owner's cost, % init. cap., 1st yr op.	5.00
ROM coal price, $/S-ton (base yr)	20.50
Natural gas price, $/MMBTU (base yr)	2.00
Electricity price, $/KWH (base yr)	0.050
Raw water, $/MGAL (base yr)	0.10
General inflation, percent/yr	3.00
Constr. cost index (CCI), %/yr	3.00
Coal escalation+, percent/yr	3.00
Crude oil escalation+, percent/yr	3.00
Natural gas escalation+, percent/yr	3.00
Naphtha syncrude prem.	1.07
Naphtha price, $BBL (base yr)	0.00
Light distillate syncrude prem.	1.04

TABLE 48.4 - continued

Light distillate price, $/BBL (base yr)	0.00
Heavy distillate syncrude prem	1.09
Heavy distillate price, $BBL (base yr)	0.00
Gas oil syncrude prem.	1.04
Gas oil price, $/BBL (base yr)	0.00
Liquid propane price, $/BBL (base yr)	7.50
Mixed butane price, $/BBL (base yr)	14.50
Ammonia price, $S-ton (base yr)	120.00
Mixed Phenol price, $/S-ton (base yr)	400.00
Sulfur price, $/short-ton (base yr)	80.00
Construction start = Jan 1 (base yr)	1992
Percent equity	25
Imputed interest rate, %/yr	0.00
Bank interest rate, percent/yr	8.00
Federal income tax rate, %/yr	34.00
State income tax rate, %/yr	0.00
Fixed cost, % init. cap. (0 = not used)	0.00
Term of loan, years (fixed)	10
Years of construction (fixed	4
Years of operation (fixed)	25
Depreciation, years (fixed)	10

Result Summary

Base year	1992
Total Capital	$3478.0 MM
Syn Crude Premium	1.07
Crude Oil Equivalent (PADD II)	45.50 $/BBL (base yr)

(1) Rates are in 1000 short tons per stream day

Note:

M= 1000X
MM = 1000 X M
MMM = 1000 X MM

* Calculated value
\+ Inflation included

Table 48.5
Economic Analysis for Option 4

Model Input (based on overall plant material balance)

ROM coal feed rate, MTSD[1]	29.0
Coal cleaning refuse rate, MTSD[1]	5.8
Ash production rate, MTSD[1]	2.8
Natural Gas rate, MMMBTU/SD	83.78
Electricity purchase, MEGA-WH/SD	0.00
Raw water make-up, MMGSD	17.3
Naphtha production, MBSD	19.20
Light Distillate production, MBSD	7.80
Heavy Distillate Production, MBSD	21.64
Gas oil production, MBSD	13.31
Liquid propane production, MBSD	4.41
Mixed Butanes production, MBSD	3.54
Ammonia production, MTSD[1]	0.24
Phenol production, MTSD[1]	0.03
Sulfur production, MTSD[1]	0.74
Number of operators/boardmen	415
Total installed capital, $MM (E-yr)	3326.7 Mid-1991 $

TABLE 48.5 - continued

Input data relating to key assumptions, construction schedule, and feed and product costs

Total installed capital, $MM (base year)	3376.2
Operating Factor, percent	88.4
Percent plant operational, 1st yr.	100.0
Percent plant operational, 2nd yr.	100.0
Percent Plant operational, 3rd yr.	100.0
Refuse Disposal Cost, $/S-ton (base yr)	2.00
Ash Disposal cost, $S-ton (base yr)	5.00
Catalyst & Chemicals f(prod), $MM/MBSD (base yr)	1.29*
Operator pay rate, $/op./hr. (base yr)	20.50
Overhead factor (benefits, etc)	1.40
Other labor costs, $MM/yr (base yr)	15.86
Maintenance, taxes & insurance % init. cap.	1.00
Sales, Admin., Research, $MM/yr (base yr)	0.0
Percent capital 1st yr. construction	20.0
Percent capital 2nd yr. construction	30.0
Percent capital 3rd yr. construction	30.0
Percent capital 4th yr. construction	20.0
Working capital percent revenue	10.0
Percent liquid of working cap.	50.0
Owner's cost, % init. cap., 1st yr op.	5.00
ROM coal price, $/S-ton (base yr)	20.50
Natural gas price, $/MMBTU (base yr)	2.00
Electricity price, $/KWH (base yr)	0.050
Raw water, $/MGAL (base yr)	0.10
General inflation, percent/yr	3.00
Constr. cost index (CCI), %/yr	3.00
Coal escalation+, percent/yr	3.00
Crude oil escalation+, percent/yr	3.00
Natural gas escalation+, percent/yr	3.00
Naphtha syncrude prem.	1.07
Naphtha price, $BBL (base yr)	0.00
Light distillate syncrude prem.	1.04

TABLE 48.5 - continued

Light distillate price, $/BBL (base yr)	0.00
Heavy distillate syncrude prem	1.09
Heavy distillate price, $BBL (base yr)	0.00
Gas oil syncrude prem.	1.04
Gas oil price, $/BBL (base yr)	0.00
Liquid propane price, $/BBL (base yr)	7.50
Mixed butane price, $/BBL (base yr)	14.50
Ammonia price, $S-ton (base yr)	120.00
Mixed Phenol price, $/S-ton (base yr)	400.00
Sulfur price, $/short-ton (base yr)	80.00
Construction start = Jan 1 (base yr)	1992
Percent equity	25
Imputed interest rate, %/yr	0.00
Bank interest rate, percent/yr	8.00
Federal income tax rate, %/yr	34.00
State income tax rate, %/yr	0.00
Fixed cost, % init. cap. (0 = not used)	0.00
Term of loan, years (fixed)	10
Years of construction (fixed	4
Years of operation (fixed)	25
Depreciation, years (fixed)	10

Result Summary

Base year	1992
Total Capital	$3376.2 MM
Syn Crude Premium	1.07
Crude Oil Equivalent (PADD II)	37.45 $/BBL (base yr)

(1) Rates are in 1000 short tons per stream day

Note:
M= 1000X
MM = 1000 X M
MMM = 1000 X MM

* Calculated value
\+ Inflation included

Table 48.6
Economic Analysis for Option 5

Model Input (based on overall plant material balance)

ROM coal feed rate, MTSD[1]	23.4
Coal cleaning refuse rate, MTSD[1]	4.7
Ash production rate, MTSD[1]	2.2
Natural Gas rate, MMMBTU/SD	62.66
Electricity purchase, MEGA-WH/SD	0.00
Raw water make-up, MMGSD	14.6
Naphtha production, MBSD	15.01
Light Distillate production, MBSD	5.90
Heavy Distillate Production, MBSD	24.81
Gas oil production, MBSD	3.21
Liquid propane production, MBSD	3.70
Mixed Butanes production, MBSD	2.74
Ammonia production, MTSD[1]	0.21
Phenol production, MTSD[1]	0.04
Sulfur production, MTSD[1]	0.60
Number of operators/boardmen	415
Total installed capital, $MM (E-yr)	3308.0 Mid-1991 $

TABLE 48.6 - continued

Input data relating to key assumptions, construction schedule, and feed and product costs

Total installed capital, $MM (base year)	3357.3
Operating Factor, percent	88.4
Percent plant operational, 1st yr.	100.0
Percent plant operational, 2nd yr.	100.0
Percent Plant operational, 3rd yr.	100.0
Refuse Disposal Cost, $/S-ton (base yr)	2.00
Ash Disposal cost, $S-ton (base yr)	5.00
Catalyst & Chemicals f(prod), $MM/MBSD (base yr)	1.64*
Operator pay rate, $/op./hr. (base yr)	20.50
Overhead factor (benefits, etc)	1.40
Other labor costs, $MM/yr (base yr)	15.86
Maintenance, taxes & insurance % init. cap.	1.00
Sales, Admin., Research, $MM/yr (base yr)	0.0
Percent capital 1st yr. construction	20.0
Percent capital 2nd yr. construction	30.0
Percent capital 3rd yr. construction	30.0
Percent capital 4th yr. construction	20.0
Working capital percent revenue	10.0
Percent liquid of working cap.	50.0
Owner's cost, % init. cap., 1st yr op.	5.00
ROM coal price, $/S-ton (base yr)	20.50
Natural gas price, $/MMBTU (base yr)	2.00
Electricity price, $/KWH (base yr)	0.050
Raw water, $/MGAL (base yr)	0.10
General inflation, percent/yr	3.00
Constr. cost index (CCI), %/yr	3.00
Coal escalation+, percent/yr	3.00
Crude oil escalation+, percent/yr	3.00
Natural gas escalation+, percent/yr	3.00
Naphtha syncrude prem.	1.07
Naphtha price, $BBL (base yr)	0.00
Light distillate syncrude prem.	1.04

TABLE 48.6 - continued

Light distillate price, $/BBL (base yr)	0.00
Heavy distillate syncrude prem	1.09
Heavy distillate price, $BBL (base yr)	0.00
Gas oil syncrude prem.	1.04
Gas oil price, $/BBL (base yr)	0.00
Liquid propane price, $/BBL (base yr)	7.50
Mixed butane price, $/BBL (base yr)	14.50
Ammonia price, $S-ton (base yr)	120.00
Mixed Phenol price, $/S-ton (base yr)	400.00
Sulfur price, $/short-ton (base yr)	80.00
Construction start = Jan 1 (base yr)	1992
Percent equity	25
Imputed interest rate, %/yr	0.00
Bank interest rate, percent/yr	8.00
Federal income tax rate, %/yr	34.00
State income tax rate, %/yr	0.00
Fixed cost, % init. cap. (0 = not used)	0.00
Term of loan, years (fixed)	10
Years of construction (fixed	4
Years of operation (fixed)	25
Depreciation, years (fixed)	10

Result Summary

Base year	1992
Total Capital	$3357.3 MM
Syn Crude Premium	1.07
Crude Oil Equivalent (PADD II)	44.30 $/BBL (base yr)

(1) Rates are in 1000 short tons per stream day

Note:
M= 1000X
MM = 1000 X M
MMM = 1000 X MM

* Calculated value
\+ Inflation included

Table 48.7
Economic Analysis for Option 6

Model Input (based on overall plant material balance)

ROM coal feed rate, MTSD[1]	21.4
Coal cleaning refuse rate, MTSD[1]	4.3
Ash production rate, MTSD[1]	2.6
Natural Gas rate, MMMBTU/SD	248.08
Electricity purchase, MEGA-WH/SD	-519.48
Raw water make-up, MMGSD	23.9
Naphtha production, MBSD	19.20
Light Distillate production, MBSD	7.80
Heavy Distillate Production, MBSD	21.64
Gas oil production, MBSD	13.31
Liquid propane production, MBSD	4.41
Mixed Butanes production, MBSD	3.54
Ammonia production, MTSD[1]	0.24
Phenol production, MTSD[1]	0.05
Sulfur production, MTSD[1]	0.41
Number of operators/boardmen	308
Total installed capital, $MM (E-yr)	2782.7 Mid-1991 $

TABLE 48.7 - continued

Input data relating to key assumptions, construction schedule, and feed and product costs

Total installed capital, $MM (base year)	2824.2
Operating Factor, percent	88.4
Percent plant operational, 1st yr.	100.0
Percent plant operational, 2nd yr.	100.0
Percent Plant operational, 3rd yr.	100.0
Refuse Disposal Cost, $/S-ton (base yr)	2.00
Ash Disposal cost, $S-ton (base yr)	5.00
Catalyst & Chemicals f(prod), $MM/MBSD (base yr)	1.29*
Operator pay rate, $/op./hr. (base yr)	20.50
Overhead factor (benefits, etc)	1.40
Other labor costs, $MM/yr (base yr)	15.86
Maintenance, taxes & insurance % init. cap.	1.00
Sales, Admin., Research, $MM/yr (base yr)	0.0
Percent capital 1st yr. construction	20.0
Percent capital 2nd yr. construction	30.0
Percent capital 3rd yr. construction	30.0
Percent capital 4th yr. construction	20.0
Working capital percent revenue	10.0
Percent liquid of working cap.	50.0
Owner's cost, % init. cap., 1st yr op.	5.00
ROM coal price, $/S-ton (base yr)	20.50
Natural gas price, $/MMBTU (base yr)	2.00
Electricity price, $/KWH (base yr)	0.050
Raw water, $/MGAL (base yr)	0.10
General inflation, percent/yr	3.00
Constr. cost index (CCI), %/yr	3.00
Coal escalation+, percent/yr	3.00
Crude oil escalation+, percent/yr	3.00
Natural gas escalation+, percent/yr	3.00
Naphtha syncrude prem.	1.07
Naphtha price, $BBL (base yr)	0.00
Light distillate syncrude prem.	1.04

TABLE 48.7 - continued

Light distillate price, $/BBL (base yr)	0.00
Heavy distillate syncrude prem	1.09
Heavy distillate price, $BBL (base yr)	0.00
Gas oil syncrude prem.	1.04
Gas oil price, $/BBL (base yr)	0.00
Liquid propane price, $/BBL (base yr)	7.50
Mixed butane price, $/BBL (base yr)	14.50
Ammonia price, $S-ton (base yr)	120.00
Mixed Phenol price, $/S-ton (base yr)	400.00
Sulfur price, $/short-ton (base yr)	80.00
Construction start = Jan 1 (base yr)	1992
Percent equity	25
Imputed interest rate, %/yr	0.00
Bank interest rate, percent/yr	8.00
Federal income tax rate, %/yr	34.00
State income tax rate, %/yr	0.00
Fixed cost, % init. cap. (0 = not used)	0.00
Term of loan, years (fixed)	10
Years of construction (fixed	4
Years of operation (fixed)	25
Depreciation, years (fixed)	10

Result Summary

Base year	1992
Total Capital	$2824.2 MM
Syn Crude Premium	1.07
Crude Oil Equivalent (PADD II)	36.05 $/BBL (base yr)

(1) Rates are in 1000 short tons per stream day

Note:
M= 1000X
MM = 1000 X M
MMM = 1000 X MM

* Calculated value
\+ Inflation included

Table 48.8
Economic Analysis for Option 7

Model Input (based on overall plant material balance)

ROM coal feed rate, MTSD[1]	28.2
Coal cleaning refuse rate, MTSD[1]	5.6
Ash production rate, MTSD[1]	2.7
Natural Gas rate, MMMBTU/SD	89.81
Electricity purchase, MEGA-WH/SD	0.00
Raw water make-up, MMGSD	16.9
Naphtha production, MBSD	17.19
Light Distillate production, MBSD	7.80
Heavy Distillate Production, MBSD	21.64
Gas oil production, MBSD	13.31
Liquid propane production, MBSD	4.82
Mixed Butanes production, MBSD	3.75
Ammonia production, MTSD[1]	0.24
Phenol production, MTSD[1]	0.03
Sulfur production, MTSD[1]	0.72
Number of operators/boardmen	426
Total installed capital, $MM (E-yr)	3345.8 Mid-1991 $

TABLE 48.8 - continued

Input data relating to key assumptions, construction schedule, and feed and product costs

Total installed capital, $MM (base year)	3395.6
Operating Factor, percent	88.4
Percent plant operational, 1st yr.	100.0
Percent plant operational, 2nd yr.	100.0
Percent Plant operational, 3rd yr.	100.0
Refuse Disposal Cost, $/S-ton (base yr)	2.00
Ash Disposal cost, $S-ton (base yr)	5.00
Catalyst & Chemicals f(prod), $MM/MBSD (base yr)	1.34*
Operator pay rate, $/op./hr. (base yr)	20.50
Overhead factor (benefits, etc)	1.40
Other labor costs, $MM/yr (base yr)	15.86
Maintenance, taxes & insurance % init. cap.	1.00
Sales, Admin., Research, $MM/yr (base yr)	0.0
Percent capital 1st yr. construction	20.0
Percent capital 2nd yr. construction	30.0
Percent capital 3rd yr. construction	30.0
Percent capital 4th yr. construction	20.0
Working capital percent revenue	10.0
Percent liquid of working cap.	50.0
Owner's cost, % init. cap., 1st yr op.	5.00
ROM coal price, $/S-ton (base yr)	20.50
Natural gas price, $/MMBTU (base yr)	2.00
Electricity price, $/KWH (base yr)	0.050
Raw water, $/MGAL (base yr)	0.10
General inflation, percent/yr	3.00
Constr. cost index (CCI), %/yr	3.00
Coal escalation+, percent/yr	3.00
Crude oil escalation+, percent/yr	3.00
Natural gas escalation+, percent/yr	3.00
Naphtha syncrude prem.	1.07
Naphtha price, $BBL (base yr)	0.00
Light distillate syncrude prem.	1.04

TABLE 48.8 - continued

Light distillate price, $/BBL (base yr)	0.00
Heavy distillate syncrude prem	1.09
Heavy distillate price, $BBL (base yr)	0.00
Gas oil syncrude prem.	1.04
Gas oil price, $/BBL (base yr)	0.00
Liquid propane price, $/BBL (base yr)	7.50
Mixed butane price, $/BBL (base yr)	14.50
Ammonia price, $S-ton (base yr)	120.00
Mixed Phenol price, $/S-ton (base yr)	400.00
Sulfur price, $/short-ton (base yr)	80.00
Construction start = Jan 1 (base yr)	1992
Percent equity	25
Imputed interest rate, %/yr	0.00
Bank interest rate, percent/yr	8.00
Federal income tax rate, %/yr	34.00
State income tax rate, %/yr	0.00
Fixed cost, % init. cap. (0 = not used)	0.00
Term of loan, years (fixed)	10
Years of construction (fixed	4
Years of operation (fixed)	25
Depreciation, years (fixed)	10

Result Summary

Base year	1992
Total Capital	$3395.6 MM
Syn Crude Premium	1.07
Crude Oil Equivalent (PADD II)	38.65 $/BBL (base yr)

(1) Rates are in 1000 short tons per stream day

Note:

M= 1000X
MM = 1000 X M
MMM = 1000 X MM

* Calculated value
\+ Inflation included

Table 48.9
Crude Oil Equivalent (COE) Price for Various Options

Op. No.	Option Description	COE $/bbl
1	Liquefaction feed Coal Cleaning by Heavy Media Separation	37.25
2	Liquefaction Feed Coal Cleaning by Spherical Agglomeration	39.50
3	Thermal-Catalytic Liquefaction Reactor Configuration	45.50
4	Catalytic-Catalytic Reactor Configuration with Vent Gas Separation	37.45
5	Fluid Coking of Vacuum Bottoms	44.30
6	Stream Reforming of Natural Gas plus FBC Unit for Hydrogen Production	36.05
7	Naphtha Reforming	38.65

Sensitivity on Economics

The sensitivity analysis on economics was carried out to determine the impact of changes in capital, raw material pricing, owner's equity, price escalation (per EIA) on coal, natural gas and crude oil, and syncrude premium, respectively.

Results of the sensitivity analysis are shown in Tables 48.10. Table 48.10 presents the results on sensitivity analysis for the baseline.

As shown in the table, changes in capital cost by 10% and 25% change the Crude Oil Equivalent price by $2.35/bbl and $5.90/bbl, respectively. A 25% change in coal and natural gas price individually changes the Crude Oil Equivalent price by $2.30/bbl and $0.65/bbl, respectively.

The increase of owner's equity by 100% (a change from 25% to 50%) increases the Crude Oil Equivalent price by $3.05/bbl.

When coal, natural gas and crude oil are individually allowed to escalate per EIA, instead of at the fixed rate of 3% (inflation), the equivalent crude oil price decreases by $8.70/bbl. The increase in syncrude premium to 1.27 results in a drop of the Crude Oil Equivalent price by $6.15/bbl.

Table 48.10

Economic Results on Sensitivities for Baseline

ECONOMICS	
BASE CASE	$38.55/bbl

SENSITIVITIES		
Item	**Change**	**Δ $/bbl**
• Capital	± 10% ± 25%	± 2.35 ± 5.90
• Raw Material		
Coal	± 25%	± 2.30
Natural Gas	± 25%	± 0.65
• Owner's Equity	± 100%	± 3.65
• Liquid yields	± 10%	- 3.50
• Price Escalation, per EIA		- 8.70
Coal	+ 1.6	
Natural gas	+ 3.5	
Crude oil	+ 2.9	
• Syncrude Premium	+20%	- 6.15
• Base Case with H_2 from natural gas		- 2.55

49. Discussion

The study results presented in the various volumes of the final report are for the baseline design. A list of assumptions were followed during the economic evaluation. These assumptions are included in Section 48 of this report. Besides them there are a number of common inherent limitations of the study. Some of these common limitations are discussed below:

- Capital cost estimates were made with an accuracy of ± 30%. This level of accuracy in cost estimates did not require a detailed engineering of plants.

- Capital cost estimates were based on the "Nth plant" concept and the plant operating factor were assumed to be the same as the "First plant". The "Nth plant" assumes that the technology for direct liquefaction of coal is a mature technology and that there are many similar plants already constructed and operating. Therefore, the uncertainties regarding engineering, construction and operability of a "Nth plant" are at a minimal level.

- The valuation of the various product streams was achieved by introducing syncrude premium factor (SCP) which relates the coal liquefaction plant product values to a typical crude oil in a PADD II refinery. Although SCP was determined in a rigorous manner using the Bechtel proprietary linear programming (LP) refinery model, PIMS, this is not an exact number. The PIMS LP model was developed based on a typical petroleum refinery located in PADD II making two different product slates. The behavior of the coal liquid products in the refinery was estimated based on the published properties and processing data of similar coal liquids. Because availability of such data are limited at present, improvement can only be achieved by having better characterization data of various streams.

Although the above mentioned limitations are inherent for this study, comparisons of the results of the economic evaluation on relative basis should be reasonably accurate.

APPENDIX
COMPUTATION OF ONSTREAM FACTOR

Six Train Plant (5 in Operation, 1 Standby)

Group A: Plant 2

Probability of running per train, P = .9227
Unscheduled Outage 1-.9227 = .0773
Scheduled Outage = 6 weeks/train/year. Therefore t = 6
6 trains are ready 16 weeks = 0.30769
5 trains are ready 36 weeks = 0.69231

Six trains available. Five running, 0 down

$$\mu(0 \text{ of } 6) = \frac{6!}{0!6!} (0.0773)^0 (0.9227)^6 = 0.617110$$

$$(0.617110)(0.30769) = 0.18988$$

Total = 0.18988

Five trains running, 1 down

$$\mu(1 \text{ of } 6) = \frac{6!}{1!5!} (0.0773)^1 (0.9227)^5 = 0.310193$$

$$(0.310193)(0.30769) = 0.09544$$

$$\mu(0 \text{ of } 5) = \frac{5!}{0!5!} (0.0773)^0 (0.9227)^5 = 0.668809$$

$$(0.668809)(0.69231) = 0.46302$$

Total = 0.55847

Four trains running, 2 down

$$\mu(2\ of\ 6) = \frac{6!}{2!4!}\ (0.0773)^2\ (0.9227)^4 = 0.064966$$

$$(0.064966)(0.30769) = 0.01999$$

$$\mu(1\ of\ 5) = \frac{5!}{1!4!}\ (0.0773)^1\ (0.9227)^4 = 0.280150$$

$$(0.280150)(0.69231) = 0.19395$$

Total = 0.21394

Three Trains running, 3 down

$$\mu(3\ of\ 6) = \frac{6!}{3!3!}\ (0.0773)^3\ (0.9227)^3 = 0.007256$$

$$(0.007256)(0.30769) = 0.00223$$

$$\mu(2\ of\ 5) = \frac{5!}{2!3!}\ (0.0773)^2\ (0.9227)^3 = 0.046939$$

$$(0.046939)(0.69231) = 0.03250$$

Total = 0.03473

Two trains running, 4 down

$$\mu(4\ of\ 6) = \frac{6!}{4!2!}\ (0.0773)^4\ (0.9227)^2 = 0.000455$$

$$(0.000455)(0.30769) = 0.00014$$

$$\mu(3\ of\ 5) = \frac{5!}{3!2!}\ (0.0773)^3\ (0.9227)^2 = 0.003932$$

$$(0.003932)(0.69231) = 0.00272$$

Total = 0.00286

One train running, 5 down

$$\mu(5\ of\ 6) = \frac{6!}{5!1!}\ (0.0773)^5\ (0.9227)^1 = 0.000015$$

$$(0.000015)(0.30769) = 0.00000$$

$$\mu(4\ of\ 5) = \frac{5!}{4!1!}\ (0.0773)^4\ (0.9227)^1 = 0.000164$$

$$(0.000164)(0.69231) = 0.00011$$

Total = 0.00012

Zero train running, 6 down

$$\mu(6\ of\ 6) = \frac{6!}{6!0!}\ (0.0773)^6\ (0.9227)^0 = 0.000000$$

$$(0.000000)(0.30769) = 0.00000$$

$$\mu(5\ of\ 5) = \frac{5!}{5!0!}\ (0.0773)^5\ (0.9227)^0 = 0.000002$$

$$(0.000002)(0.69231) = 0.00000$$

Total = 0.00000

PRODUCTION FACTORS

Number of Trains Available	Probability of Running	Capacity Factors	Production Factors
6	0.18988	1	0.189880
5	0.55847	1	0.558466
4	0.21394	0.8	0.171152
3	0.03473	0.6	0.020837
2	0.00286	0.4	0.001145
1	0.00012	0.2	0.000023
0	0.00000	0	0.000000
Total	**1.00000**		**0.941505**

Six Train Plant (5 in Operation, 1 Standby)

Group D: Plant 9

Probability of running per train, P = .9773
Unscheduled Outage 1-.9773 = .0227
Scheduled Outage = 1 week/train/year. Therefore t = 1
6 trains are ready 46 weeks = 0.88462
5 trains are ready 6 weeks = 0.11538

Six trains available. Five running, 0 down

$$\mu(0 \text{ of } 6) = \frac{6!}{0!6!} (0.0227)^0 (0.9773)^6 = 0.871299$$

$$(0.871299)(0.88462) = 0.77076$$

Total = 0.77076

Five trains running, 1 down

$$\mu(1 \text{ of } 6) = \frac{6!}{1!5!} (0.0227)^1 (0.9773)^5 = 0.121427$$

$$(0.121427)(0.88462) = 0.10742$$

$$\mu(0 \text{ of } 5) = \frac{5!}{0!5!} (0.0227)^0 (0.9773)^5 = 0.891537$$

$$(0.891537)(0.11538) = 0.10287$$

Total = 0.21029

Four trains running, 2 down

$$\mu(2\ of\ 6) = \frac{6!}{2!4!}\ (0.0227)^2\ (0.9773)^4 = 0.007051$$

$$(0.007051)(0.88462) = 0.00624$$

$$\mu(1\ of\ 5) = \frac{5!}{1!4!}\ (0.0227)^1\ (0.9773)^4 = 0.103539$$

$$(0.103539)(0.11538) = 0.01195$$

Total = 0.01818

Three Trains running, 3 down

$$\mu(3\ of\ 6) = \frac{6!}{3!3!}\ (0.0227)^3\ (0.9773)^3 = 0.000218$$

$$(0.000218)(0.88462) = 0.00019$$

$$\mu(2\ of\ 5) = \frac{5!}{2!3!}\ (0.0227)^2\ (0.9773)^3 = 0.004809$$

$$(0.004809)(0.11538) = 0.00055$$

Total = 0.00075

Two trains running, 4 down

$$\mu(4 \text{ of } 6) = \frac{6!}{4!2!} (0.0227)^4 (0.9773)^2 = 0.000003$$

$$(0.000003)(0.88462) = 0.00000$$

$$\mu(3 \text{ of } 5) = \frac{5!}{3!2!} (0.0227)^3 (0.9773)^2 = 0.000111$$

$$(0.000111)(0.11538) = 0.00001$$

Total = 0.00002

One train running, 5 down

$$\mu(5 \text{ of } 6) = \frac{6!}{5!1!} (0.0227)^5 (0.9773)^1 = 0.000000$$

$$(0.000000)(0.88462) = 0.00000$$

$$\mu(4 \text{ of } 5) = \frac{5!}{4!1!} (0.0227)^4 (0.9773)^1 = 0.000001$$

$$(0.000001)(0.11538) = 0.00000$$

Total = 0.00000

Zero train running, 6 down

$$\mu(6 \textit{ of } 6) = \frac{6!}{6!0!} (0.0227)^6 (0.9773)^0 = 0.000000$$

$$(0.0000000)(0.88462) = 0.00000$$

$$\mu(5 \textit{ of } 5) = \frac{5!}{5!0!} (0.0227)^5 (0.9773)^0 = 0.000000$$

$$(0.000000)(0.11538) = 0.00000$$

Total = 0.00000

PRODUCTION FACTORS

Number of Trains Available	Probability of Running	Capacity Factors	Production Factors
6	0.77076	1	0.770764
5	0.21029	1	0.210286
4	0.01818	0.8	0.014547
3	0.00075	0.6	0.000448
2	0.00002	0.4	0.000006
1	0.00000	0.2	0.000000
0	0.00000	0	0.000000
Total	**1.00000**		**0.996053**

Twelve Train Plant (10 in Operation, 2 Standby)

Group F: Plant 1.4

Probability of running per train, P = 0.963
Unscheduled Outage 1 - 0.963 = .037
Scheduled Outage = 1 week/train/year. Therefore t = 1
6 trains are ready 46 weeks = 0.88462
5 trains are ready 6 weeks = 0.11538

Six trains available. Five running, 0 down

$$\mu(0 \textit{ of } 6) = \frac{6!}{0!6!} (0.037)^0 (0.963)^6 = 0.797549$$

$$(0.797549)(0.88462) = 0.70552$$

Total = 0.70552

Five trains running, 1 down

$$\mu(1 \textit{ of } 6) = \frac{6!}{1!5!} (0.037)^1 (0.963)^5 = 0.183858$$

$$(0.183858)(0.88462) = 0.16264$$

$$\mu(0 \textit{ of } 5) = \frac{5!}{0!5!} (0.037)^0 (0.963)^5 = 0.828192$$

$$(0.828192)(0.11538) = 0.09556$$

Total = 0.25821

Four trains running, 2 down

$$\mu(2\ of\ 6) = \frac{6!}{2!4!}\ (0.037)^2\ (0.963)^4 = 0.017660$$

$$(0.017660)(0.88462) = 0.01562$$

$$\mu(1\ of\ 5) = \frac{5!}{1!4!}\ (0.037)^1\ (0.963)^4 = 0.159102$$

$$(0.159102)(0.11538) = 0.01836$$

Total = 0.03398

Three Trains running, 3 down

$$\mu(3\ of\ 6) = \frac{6!}{3!3!}\ (0.037)^3\ (0.963)^3 = 0.000904$$

$$(0.000904)(0.88462) = 0.00080$$

$$\mu(2\ of\ 5) = \frac{5!}{2!3!}\ (0.037)^2\ (0.963)^3 = 0.012225$$

$$(0.012225)(0.11538) = 0.00141$$

Total = 0.00221

Two trains running, 4 down

$$\mu(4 \text{ of } 6) = \frac{6!}{4!2!} (0.037)^4 (0.963)^2 = 0.000026$$

$$(0.000026)(0.88462) = 0.00002$$

$$\mu(3 \text{ of } 5) = \frac{5!}{3!2!} (0.037)^3 (0.963)^2 = 0.000469$$

$$(0.000469)(0.11538) = 0.00005$$

Total = 0.00008

One train running, 5 down

$$\mu(5 \text{ of } 6) = \frac{6!}{5!1!} (0.037)^5 (0.963)^1 = 0.000000$$

$$(0.000000)(0.88462) = 0.00000$$

$$\mu(4 \text{ of } 5) = \frac{5!}{4!1!} (0.037)^4 (0.963)^1 = 0.000009$$

$$(0.000009)(0.11538) = 0.00000$$

Total = 0.00000

Z ro train running, 6 down

$$\mu(6\ of\ 6) = \frac{6!}{6!0!}\ (0.037)^6\ (0.963)^0 = 0.000000$$

$$(0.000000)(0.88462) = 0.00000$$

$$\mu(5\ of\ 5) = \frac{5!}{5!0!}\ (0.037)^5\ (0.963)^0 = 0.000000$$

$$(0.000000)(0.11538) = 0.00005$$

Total = 0.00000

PRODUCTION FACTORS

Number of Trains Available	Probability of Running	Capacity Factors	Production Factors
6	0.70552	1	0.705524
5	0.25821	1	0.258205
4	0.03398	0.8	0.027184
3	0.00221	0.6	0.001326
2	0.00008	0.4	0.000030
1	0.00000	0.2	0.000000
0	0.00000	0	0.000000
Total	**1.00000**		**0.992271**