U.S. DEPARTMENT OF ENERGY
PITTSBURGH ENERGY TECHNOLOGY CENTER

DIRECT COAL LIQUEFACTION BASELINE DESIGN AND SYSTEM ANALYSIS

CONTRACT NO. DEAC22 90PC89857

FINAL REPORT ON BASELINE AND IMPROVED BASELINE

VOLUME III
OPTIONS TO BASELINE DESIGN

MARCH 1993

PITTSBURGH, PENNSYLVANIA

U.S. DEPARTMENT OF ENERGY
PITTSBURGH ENERGY TECHNOLOGY CENTER

DIRECT COAL LIQUEFACTION BASELINE DESIGN AND SYSTEM ANALYSIS

CONTRACT NO. DEAC22 90PC89857

FINAL REPORT ON BASELINE AND IMPROVED BASELINE

VOLUME III

OPTIONS TO BASELINE DESIGN

MARCH 1993

PITTSBURGH, PENNSYLVANIA

Bechtel

3000 Post Oak Boulevard
Houston, Texas 77056-6503
Mailing address: P.O. Box 2166
Houston, Texas 77252-2166

March 8, 1993

U. S. Department of Energy
Pittsburgh Energy Technology Center
Mail Stop 922-H
P. O. Box 10940
Pittsburgh, PA 15236

Attention: Mr. Swenam Lee
Project Manager

Subject: D.O.E. Coal Liquefaction
Base Line Design and System Analysis
Contract No. DE-AC22 90PC89857
Bechtel Job No. 20952
Final Report on Study
Letter No. BLD-133

Dear Mr. Lee:

Enclosed are two copies of Volume III of the subject multi-volume final report. The final report is published in nine volumes plus an executive summary. As requested, the remaining third copy of this nine volume report will be sent to you in 3-ring binders for your desk use. Copies to the other members of DOE, as requested by the contract, are sent directly to each of them.

Sincerely yours,

Syamal K. Poddar
Project Manger

SKP:tr
Enclosure

cc: Martin Byrnes, DOE/PETC
Robert Hamilton, DOE/PETC
A. Schachtschneider, AMOCO
File
Gilbert V. McGurl, DOE/PETC
Joanne Wastek, DOE/PETC

The information and data contained in this report are the result of an ecomonic valuation and a preliminary design effort and because of the nature of this work no guarantees or warranties of performance, workmanship, or otherwise are made, ither expressed or by implication.

TABLE OF CONTENTS

TABLE OF CONTENTS

VOLUME III

OPTIONS TO BASELINE DESIGN

1. Definition of Options To Base Line Design **1-1**

1.1 Methodology For Selection
1.2 Selected Options

2. Option 1 (Liquefaction Feed Coal Cleaning by Heavy Media Separation) **2-1**

2.1 Design Basis, Criteria and Considerations
2.2 Process Description/Process Flow Diagram for the Directly Affected Plant
2.3 Material Balance for the Directly Affected Plant
2.4 Utility Summary for the Directly Affected Plant
2.5 Overall Impact
2.5.1 Overall Plant Configuration and Overall Material Balance
2.5.2 Overall Utility Summary
2.5.3 Overall Water Flow Distribution
2.5.4 Overall Hydrogen Flow Distribution

3. Option 2 (Liquefaction Feed Coal Cleaning by Spherical Agglomeration) **3-1**

3.1 Design Basis, Criteria and Considerations
3.2 Process Description/Process Flow Diagram for the Directly Affected Plant
3.3 Material Balance for the Directly Affected Plant
3.4 Utility Summary for the Directly Affected Plant
3.5 Overall Impact
3.5.1 Overall Plant Configuration and Overall Material Balance
3.5.2 Overall Utility Summary
3.5.3 Overall Water Flow Distribution
3.5.4 Overall Hydrogen Flow Distribution

VOLUME III - continued

4. Option 3 (Thermal-Catalytic Liquefaction Reactor Configuration) 4-1

4.1 Design Basis, Criteria and Considerations
4.2 Process Description/Process Flow Diagram for the Directly Affected Plant
4.3 Material Balance for the Directly Affected Plant
4.4 Utility Summary for the Directly Affected Plant
4.5 Overall Impact
4.5.1 Overall Plant Configuration and Overall Material Balance
4.5.2 Overall Utility Summary
4.5.3 Overall Water Flow Distribution
4.5.4 Overall Hydrogen Flow Distribution

5. Option 4 (Catalytic-Catalytic Reactor Configuration With Vent Gas Separation Option) 5-1

5.1 Design Basis, Criteria and Considerations
5.2 Process Description/Process Flow Diagram for the Directly Affected Plant
5.3 Material Balance for the Directly Affected Plant
5.4 Utility Summary for the Directly Affected Plant
5.5 Overall Impact
5.5.1 Overall Plant Configuration and Overall Material Balance
5.5.2 Overall Utility Summary
5.5.3 Overall Water Flow Distribution
5.5.4 Overall Hydrogen Flow Distribution

6. Option 5 (Fluid Coking of Vacuum Bottoms) 6-1

6.1 Design Basis, Criteria and Considerations
6.2 Process Description/Process Flow Diagram for the Directly Affected Plant
6.3 Material Balance for the Directly Affected Plant
6.4 Utility Summary for the Directly Affected Plant
6.5 Overall Impact
6.5.1 Overall Plant Configuration and Overall Material Balance
6.5.2 Overall Utility Summary
6.5.3 Overall Water Flow Distribution
6.5.4 Overall Hydrogen Flow Distribution

VOLUME III - continued

7. Option 6 (Steam Reforming of Natural Gas Plus FBC Unit for Hydrogen Production) 7-1

7.1 Design Basis, Criteria and Considerations
7.2 Process Description/Process Flow Diagram for the Directly Affected Plant
7.3 Material Balance for the Directly Affected Plant
7.4 Utility Summary for the Directly Affected Plant
7.5 Overall Impact
7.5.1 Overall Plant Configuration and Overall Material Balance
7.5.2 Overall Utility Summary
7.5.3 Overall Water Flow Distribution
7.5.4 Overall Hydrogen Flow Distribution

8. Option 7 (Naphtha Reforming) 8-1

8.1 Design Basis, Criteria and Considerations
8.2 Process Description/Process Flow Diagram for the Directly Affected Plant
8.3 Material Balance for the Directly Affected Plant
8.4 Utility Summary for the Directly Affected Plant
8.5 Overall Impact
8.5.1 Overall Plant Configuration and Overall Material Balance
8.5.2 Overall Utility Summary
8.5.3 Overall Water Flow Distribution
8.5.4 Overall Hydrogen Flow Distribution

VOLUME III

LIST OF TABLES

NO.	TITLE	PAGE
1.1	Process Features and Related Variables	1-2
1.2	Process Features and Related Variables for Base Line Design	1-3
1.3	Process Features and Related Variables for Option 1	1-3
1.4	Process Features and Related Variables for Option 2	1-4
1.5	Process Features and Related Variables for Option 3	1-4
1.6	Process Features and Related Variables for Option 4	1-5
1.7	Process Features and Related Variables for Option 5	1-5
1.8	Process Features and Related Variables for Option 6	1-6
2.1	Product Size From Plant 1	2-1
2.2	Overall Material Balance Per Train for Directly Affected Plant (Plant 1-01)	2-2
2.3	Utility Requirement for Plant 1-01	2-7
2.4	Overall Utilty Summary	2-8
3.1	Overall Material Balance Per Train for Directly Affected Plant (Plant 1-02) (Conventional Section)	3-7
3.2	Overall Material Balance Per Train for Directly Affected Plant (Plant 1-02) (Grinding and Agglomeration Section)	3-8
3.3	Overall Material Balance Per Train for Directly Affected Plant (Plant 1-02)	3-9
3.4	Utility Requirement for Plant 1-02	3-11
3.5	Overall Utilty Summary	3-13
4.1	Coal Liquefaction Yield	4-2
4.2	Comparison of Critical Parameter for Base Line and Therm-Cat Option	4-3
4.3	Reactor Sizing	4-4
4.4	Overall Material Balance Per Train of Coal Liquefaction Plant (Plant 2-01)	4-12
4.5	Utility Requirement for Plant 2-01	4-14
4.6	Overall Utilty Summary	4-17
5.1	Overall Material Balance Per Train of Coal Liquefaction Plant (Plant 2-02)	5-5
5.2	Utility Requirement for Plant 2-02	5-7
5.3	Overall Utilty Summary	5-10

LIST OF TABLES

NO.	TITLE	PAGE
6.1	Coal Liquefaction Yield	6-2
6.2	Overall Material Balance for Fluid Coker (Plant 8-02)	6-3
6.3	Utility Requirement for Plant 8-02	6-6
6.4	Overall Utilty Summary	6-10
7.1	Overall Material Balance for Plant 9-01	7-8
7.2	Overall Material Balance for Plant 31	7-9
7.3	Utility Requirement for Plant 9-01	7-11
7.4	Overall Utilty Summary	7-13
8.1	Utility Summary for Plant 7	8-2
8.2	Overall Utility Summary	8-3
8.3	Overall Steam Balance for Plant 31	8-9

VOLUME III

LIST OF FIGURES

NO.	TITLE	PAGE
2.1	Simplified Block Flow Diagram for Plant 1-01	2-3
2.2	Process Flow Diagram for Plant 1-01	2-5
2.3	Overall Material Balance Per Train of Coal Liquefaction Plant (Plant 2)	2-6
2.4	Overall Plant Configuration and Overall Material Balance	2-8
2.5	Overall Water Flow Distribution	2-10
2.6	Overall Hydrogen Flow Distribution	2-11
3.1	Simplified Block Flow Diagram for Plant 1-01	3-3
3.2	Process Flow Diagram of Conventional Cleaning Section for Plant 1-01	3-4
3.3	Process Flow Diagram of Agglomeration Section for Plant 1-01	3-5
3.4	Overall Material Balance Per Train of Coal Liquefaction Plant (Plant 2)	3-10
3.5	Overall Plant Configuration and Overall Material Balance	3-12
3.6	Overall Water Flow Distribution	3-14
3.7	Overall Hydrogen Flow Distribution	3-15
4.1	Process Flow Diagram of Slurry Preparation/Reaction Section of Liquefaction Plant (Plant 2)	4-7
4.2	Process Flow Diagram of Primary Separation Section of Liquefaction Plant (Plant 2)	4-10
4.3	Process Flow Diagram of Fractionation Section of Liquefaction Plant (Plant 2)	4-11
4.4	Overall Material Balance Per Train of Coal Liquefaction Plant (Plant 2)	4-13
4.5	Overall Plant Configuration and Overall Material Balance	4-16
4.6	Overall Water Flow Distribution	4-18
4.7	Overall Hydrogen Flow Distribution	4-19
5.1	Process Flow Diagram of Slurry Preparation/Reaction Section of Coal Liquefaction Plant (Plant 2)	5-3
5.2	Overall Material Balance Per Train of Coal Liquefaction Plant (Plant 2)	5-6
5.3	Overall Plant Configuration and Overall Material Balance	5-9

VOLUME III - continued

5.4 Overall Water Flow Distribution 5-11
5.5 Overall Hydrogen Flow Distribution 5-12

6.1 Process Flow Diagram of Fluid Coker 6-4
6.2 Overall Material Balance Per Train of Coal Liquefaction Plant (Plant 2) 6-5
6.3 Overall Plant Configuration and Overall Material Balance 6-9
6.4 Overall Water Flow Distribution 6-11
6.5 Overall Hydrogen Flow Distribution 6-12

7.1 Process Flow Diagram of Steam Reformer for Natural Gas 7-3
7.2 Process Flow Diagram of Fluidized Bed Combustor 7-4
7.3 Process Flow Diagram of Steam Turbine Generator 7-6
7.4 Overall Material Balance Per Train of Coal Liquefaction Plant (Plant 2) 7-10
7.5 Overall Plant Configuration and Overall Material Balance 7-12
7.6 Overall Water Flow Distribution 7-14
7.7 Overall Hydrogen Flow Distribution 7-15

8.1 Process Flow Diagram of UOP Continuous Platforming Process 8-4
8.2 UOP Continuous Platforming Process (Regeneration Section) 8-5
8.3 Overall Material Balance of Naphtha Reformer (Plant 7) 8-6
8.4 Overall Material Balance Per Train of Coal Liquefaction Plant (Plant 2) 8-7
8.5 Overall Plant Configuration and Overall Material Balance 8-8
8.6 Overall Water Flow Distribution 8-11
8.7 Overall Hydrogen Flow Distribution 8-12

1. DEFINITIONS OF OPTIONS TO BASE LINE DESIGN

1. Definition f Options to Baseline Design

1.1 Methodology for Selection

There are several key process features needed to be addressed in selecting the options. These key process features are 1) coal cleaning method, 2) reactor configuration, 3) vacuum bottoms processing and 4) method of hydrogen production. The variables related to each of these process features are listed in Table 1.1. For reader's reference, the process variables/features of the baseline design are given in Table 1.2.

The methodology utilized to select the options is explained below:

Identify the primary process features and variables related to each process feature (Table 1.1)

Define the baseline design by selecting the agreed upon combination of process variables/features as shown in Table 1.2.

Define each option by changing the variable of one process feature at a time, maintaining the variables of other process features unchanged

Combination of the newly defined process features defines the respective option

1.2 Selected Options

The above methodology is utilized in selecting the various options for this study. There were six selected options. Process features and related variables for these six options are shown in Tables 1.3 through 1.8

Besides these six options, an additional option, Option 7, was incorporated in the study as a modification of the original scope of the study. In this option a naphtha reformer, Plant 7, is added to the baseline design downstream of the naphtha hydrotreater (Plant 4 of the base case) to produce a 95 RON clear reformate product.

TABLE 1.1

PROCESS FEATURES AND RELATED VARIABLES

Process Features:	Variables:
Cleaning Method for Feed Coal	• Jig • Heavy Media Separation • Spherical Agglomeration
Reactor Configuration	• Catalytic-Catalytic • Thermal-Catalytic • Catalytic-Catalytic with Vent Gas Separation
Vacuum Bottoms Processing	• ROSE-SR • Coking Delayed Fluid
Hydrogen Production	• Coal Gasification (1) Shell Texaco • Steam Reforming of Natural Gas

(1) Will include ROSE-SR concentrate or coke where applicable

TABLE 1.2

PROCESS FEATURES AND RELATED VARIABLES FOR BASE LINE DESIGN

Pr cess Features:	Variables:
Cleaning Method for Feed Coal	Jig
Reactor Configuration	Catalytic-Catalytic
Vacuum Bottoms Processing	ROSE-SR
Hydrogen Production	Coal + ROSE Concentrate Gasification Utilizing TEXACO Technology (2)

(2) Selection (Shell vs Texaco) was based on economics and engineering judgement

TABLE 1.3

PROCESS FEATURES AND RELATED VARIABLES FOR OPTION 1

Process Features:	Variables:
Cleaning Method for Feed Coal	Heavy Media Separation (3)
Reactor Configuration	Catalytic-Catalytic
Vacuum Bottoms Processing	ROSE-SR
Hydrogen Production	Coal + ROSE-SR Concentrate Gasification Utilizing TEXACO Technology

(3) Coal reactivity is assumed to be same as that of the base case coal

TABLE 1.4

PROCESS FEATURES AND RELATED VARIABLES FOR OPTION 2

Process Features:	Variables:
Cleaning Method for Feed Coal	Spherical Agglomeration (3)
Reactor Configuration	Catalytic-Catalytic
Vacuum Bottoms Processing	ROSE-SR
Hydrogen Production	Coal + ROSE Concentrate Gasification Utilizing TEXACO Technology

(3) Coal reactivity is assumed to be same as that of the base case coal

TABLE 1.5

PROCESS FEATURES AND RELATED VARIABLES FOR OPTION 3

Process Features:	Variables:
Feed Coal	Cleaning by Jig
Reactor Configuration	Thermal-Catalytic
Vacuum Bottoms Processing	ROSE-SR
Hydrogen Production	Coal + ROSE-SR Concentrate Gasification Utilizing TEXACO Technology

TABLE 1.6

PROCESS FEATURES AND RELATED VARIABLES FOR OPTION 4

Pr cess Features:	Variables:
Feed Coal	Cleaning by Jig
Reactor Configuration	Catalytic-Catalytic with Vent Gas Separation
Vacuum Bottoms Processing	ROSE-SR
Hydrogen Production	Coal + ROSE Concentrate Gasification Utilizing TEXACO Technology

TABLE 1.7

PROCESS FEATURES AND RELATED VARIABLES FOR OPTION 5

Process Features:	Variables:
Feed Coal	Cleaning by Jig
Reactor Configuration	Catalytic-Catalytic
Vacuum Bottoms Processing	Fluid Coking (4,5)
Hydrogen Production	Coal + Coke Gasification Gasification Utilizing TEXACO Technology

(4) With DOE/PETC's approval, delayed coking option as shown in Table 1 has been deleted from the scope of work. Exxon fluid coking technology was selected as the only coking technology for the study.

(5) Coke is sent to gasifier.

2. OPTION 1

2. Option 1 (Liqu faction Feed Coal Cleaning by Heavy M dia Separation)

2.1 Design Basis, Criteria and Considerations

In this option, as discussed earlier, the feed coal to liquefaction reactor is cleaned by heavy medium separation technique instead of Jig cleaning (baseline case). The coal feed to gasifier, however, is cleaned by Jig (same as the base case).

The design basis, criteria and considerations for Plant 1 of this option is the same as the base case with a few exceptions. These exceptions are mentioned below.

Ash content of clean coal:	8.6 wt%, dry basis
Product size from Plant 1:	Shown in Table 2.1.

Table 2.1
Product Size From Plant 1

Particle Size		Wt%
	1-1/2" x 1/4"	59.9
	1/4" x 28 M	35.1
	28M x 100M	5.0
Moisture		9.0

The directly affected plant for this option is the coal cleaning and handling plant (Plant 1). The indirectly affected plants are: coal grinding and drying plant (Plant 1.4), atmospheric and vacuum towers of the coal liquefaction plant (Plant 2), critical solvent deashing unit (Plant 8), hydrogen production plant (Plant 9), steam and power generation plant (Plant 31), sewage and water treatment plant (Plant 34), ammonia recovery plant (Plant 38) and phenol recovery plant (Plant 39).

In developing this option several key assumptions were made. These are:
1) The reactivity of coal (on MAF basis) in the liquefaction reactor is same as that of the base case coal, which means that the conversion and the product slate from the liquefaction reactor section are same as those applicable to the base case. This is a very weak assumption. However, in absence of any suitable and available data it was decided to make use of this assumption for this study.
2) Vacuum tower bottoms stream has the same composition as the base case.
3) 850+ fraction is removed from the vacuum tower by adding a side draw at lower section of the vacuum tower and the fraction is sent to gasifier, Plant 9.

2.2 Process Description/Proc ss Flow Diagram for the Directly Affected Plant (Plant 1-01):

Figure 2.1 is a simplified Block Flow Diagram for coal cleaning by heavy medium separation. Here raw coal after being crushed to a top size of 1-1/2 inch is cleaned and product separated using heavy medium vessel, heavy medium cyclones and spiral separators.

The coal is initially screened into two size fractions, 1-1/2 inch x 1/4 inch x 0 using a pre-wet and sizing screen. The 1-1/2 inch x 1/4 inch fraction is cleaned in a heavy medium vessel at a specific gravity of 1.45. The clean coal is dewatered in a centrifuge and stored.

The sinks from the HM vessel is crushed and combined with the raw 1/4 inch x 0 fraction from the pre-wet and sizing screen. They are deslimed at 28 mesh and cleaned in heavy medium (HM) cyclones at a specific gravity of 1.6. The clean coal is dewatered in a centrifuge and sent to storage. The HM cyclone sinks are dewatered on a screen and sent to the Coarse Refuse Handling section.

The underflow from the desliming screens containing minus 28 mesh solids is classified in a bank of classifying cyclones at 100 mesh. The cyclone overflow slurry consists of high ash solids and water which is sent to a refuse static thickener.

The underflow from the classifying cyclones is cleaned in spiral separators. The spiral clean coal is dewatered in fine coal centrifuges and sent to storage. The fine refuse from the spiral separators is sent to the refuse thickener.

The thickened fine refuse (underflow) is pumped to the fine refuse settling pond. The clarified overflow water from the thickener is reused.

The more detailed description of this plant is shown in the process flow diagram, Figure 2.2. This figure includes product crushing, dewatering and water recovery sections of the plant.

2.3 Material Balance for the Directly Affected Plant

The material balance for each train for this directly affected plant (Plant 1-01) is shown in Table 2.2. In addition this overall material balance per train of Plant 2 (Coal Liquefaction Plant, the heart of the complex) is shown in Figure 2.3.

FIGURE 2.1 Simplifi d Bl ck Flow Diagram f r Plant 1-01

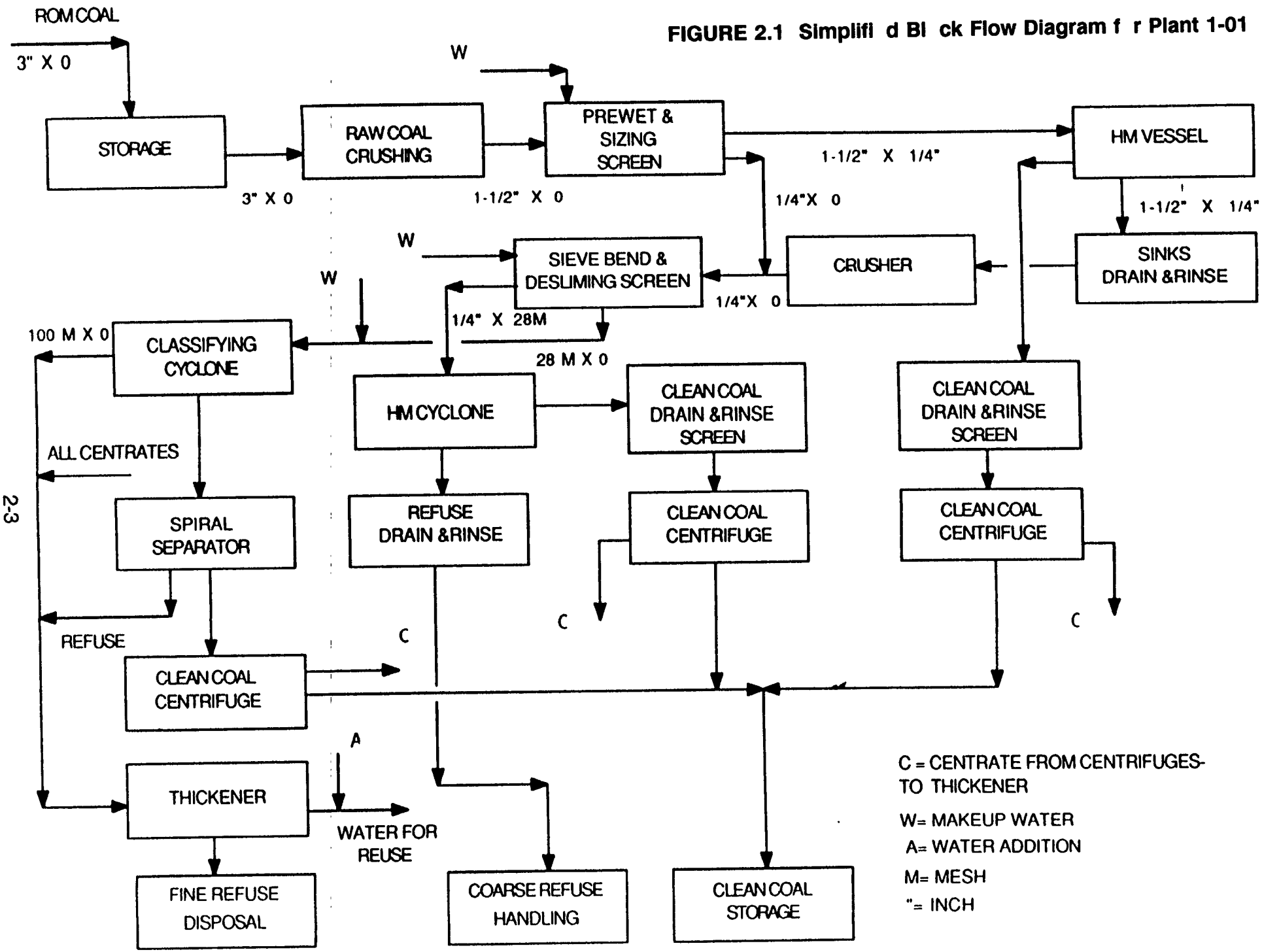

This drawing and the design it covers are property of BECHTEL. They are merely loaned and on the borrower's express agreement that they will not be reproduced, copied, loaned, exhibited, nor used except in the United way and private use permitted by any written consent given by the lender to the borrower.

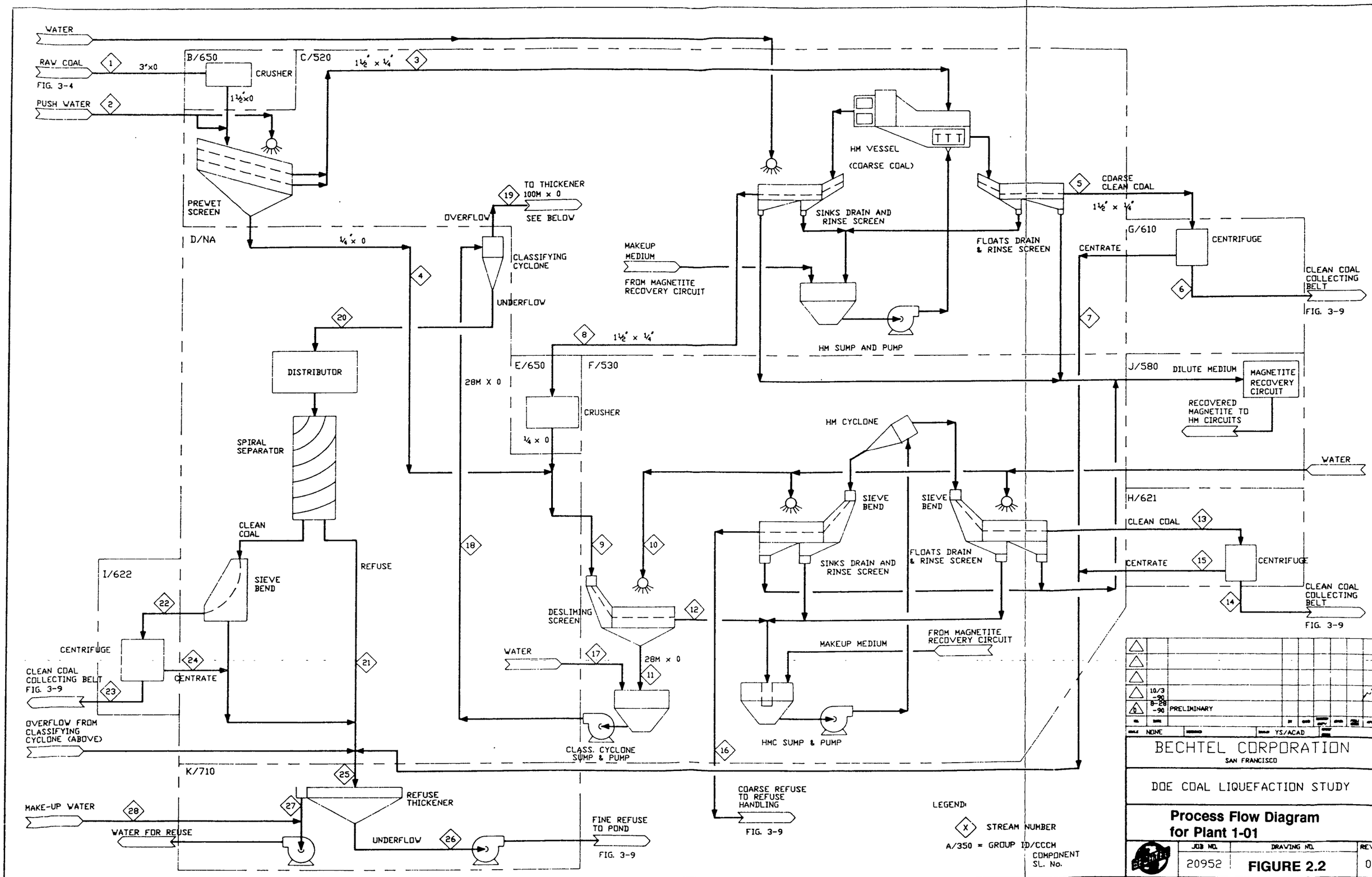

TABLE 2.2

COAL CLEANING: ALTERNATE 1 (HEAVY MEDIUM SEPARATION)

OVERALL MATERIAL BALANCE PER TRAIN FOR PLANT1 -01

		Material In			Material Out							
		Raw Coal	Make-up Water	Total In	Clean Coal	Clean Coal	Clean Coal	Total Clean Coal	Refuse	Refuse	Total Refuse	Total Out
STREAM #		1	28		6	14	23	29	16	26		
Coal	TPH	627.6		627.6	285.6	167.4	24.1	477.0	96.2	54.4	150.6	627.6
Water	TPH	59.9	167.8	227.7	21.4	21.7	3.7	46.9	16.9	163.9	180.8	227.7
	GPM	239.6	671.6	911.2	85.8	86.8	15.0	187.6	67.8	655.9	723.7	911.3
Total Stream	TPH	687.5	167.8	855.3	307.0	189.1	27.8	523.9	113.2	218.3	331.5	855.3
Ash	TPH	137.5	0.0	137.5	24.8	14.1	2.0	40.9	64.2	32.5	96.7	137.5

Note: (1) This Plant Operates Two Shifts A Day With 14.5 Hours On Stream Per Day, 5 Days A Week And 50 Weeks A Year
(2) Stream #1 Is Raw Coal Entering The Coal Cleaning Plant
(3) Stream #29 Is Clean Coal Leaving The Coal Cleaning Plant
(4) Each Train Will Deliver Approximately 1.73 MM TPY Of Clean Coal (MF) To Storage

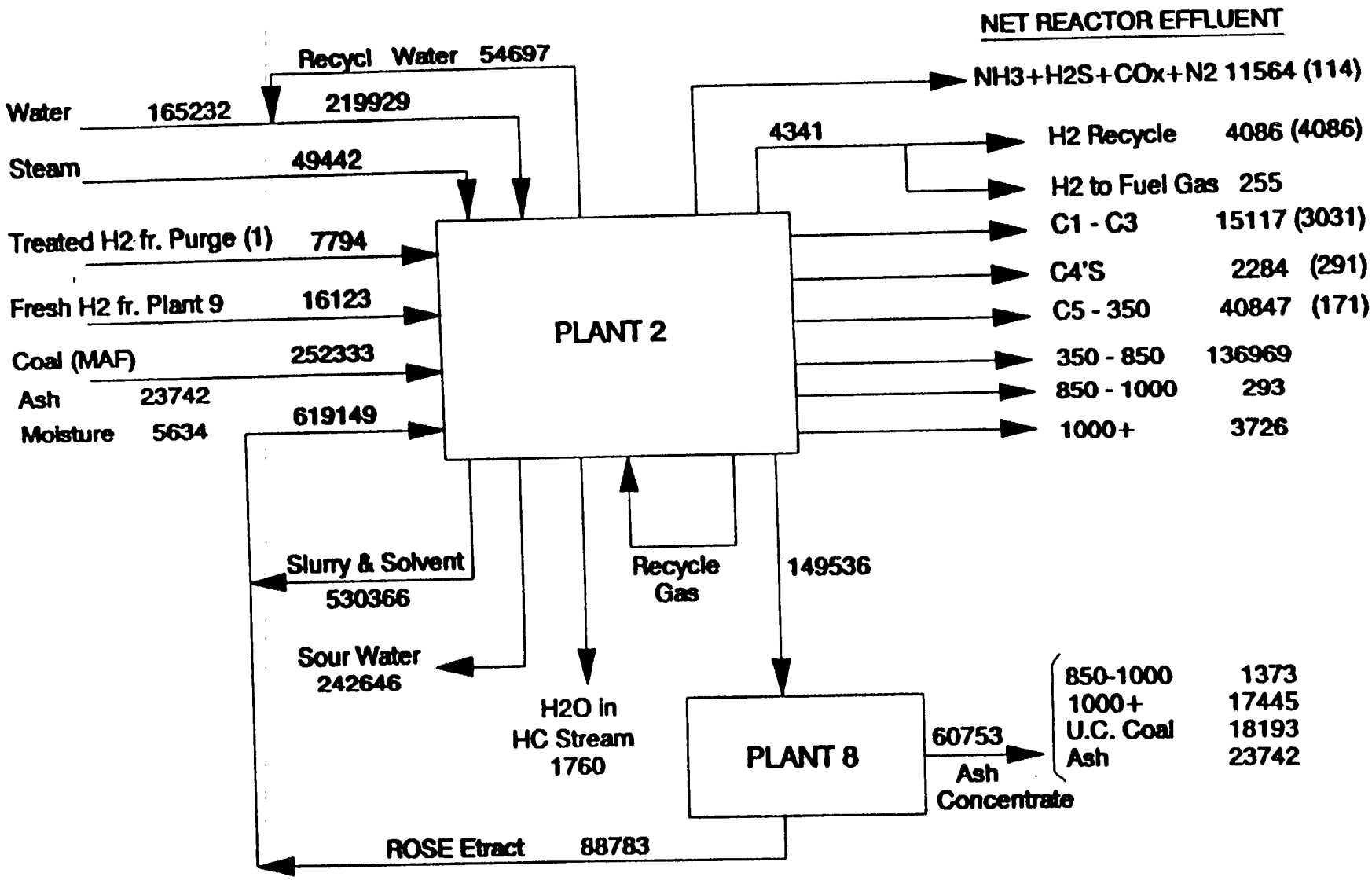

NOTES: . Flow rate in lbs/hr
. Number in parenthesis is due to input stream (1). Therefore, to calculate the % yield subtract out the corresponding number in parenthesis.
. Th HC's in sour water are shown in n t reactor effluent.

FIGURE 2.3 Ov rall Mat rial Balance per Train of Coal Liquefaction Plant (Plant 2)

2.4 Utility Summary for the Directly Affected Plant (Plant 1-01)

The utility requirement for the liquefaction feed coal cleaning by Heavy Media Separation plant is shown below in Table 2.3.

Table 2.3

Utility Requirement For Plant 1-01

Electric Power	12,402	
Air, Scfm	5,769	*
Nitrogen Scfm	72,703	*

* Air and nitrogen required for Plant 1.4

2.5 Overall Impact

The overall impact on the entire complex due to the inclusion of Plant 1-01 (Liquefaction Feed Coal Cleaning by Heavy Medium Separation) instead of Coal Cleaning by Jig (Plant 1, in base case) has been quantified based on throughput adjustments to all the indirectly affected plants. Such effects are included in this report in terms of overall plant configuration and overall material balance (sub-section 2.5.1), overall utility summary (sub-section 2.5.2), overall water flow distribution (sub-section 2.5.3), and overall hydrogen flow distribution (sub-section 2.5.4).

2.5.1 Overall Plant Configuration and Overall Material Balance

The overall plant configuration and overall material balance for this option are shown in the same figure, Figure 2.4.

2.5.2 Overall Utility Summary

The overall utility summary for this option in shown in Table 2.4.

2.5.3 Overall Water Flow Distribution

The overall water flow distribution for the entire complex is shown in Figure 2.5.

2.5.4 Overall Hydrogen Flow Distribution

The overall hydrogen flow distribution for the entire complex is shown in Figure 2.6.

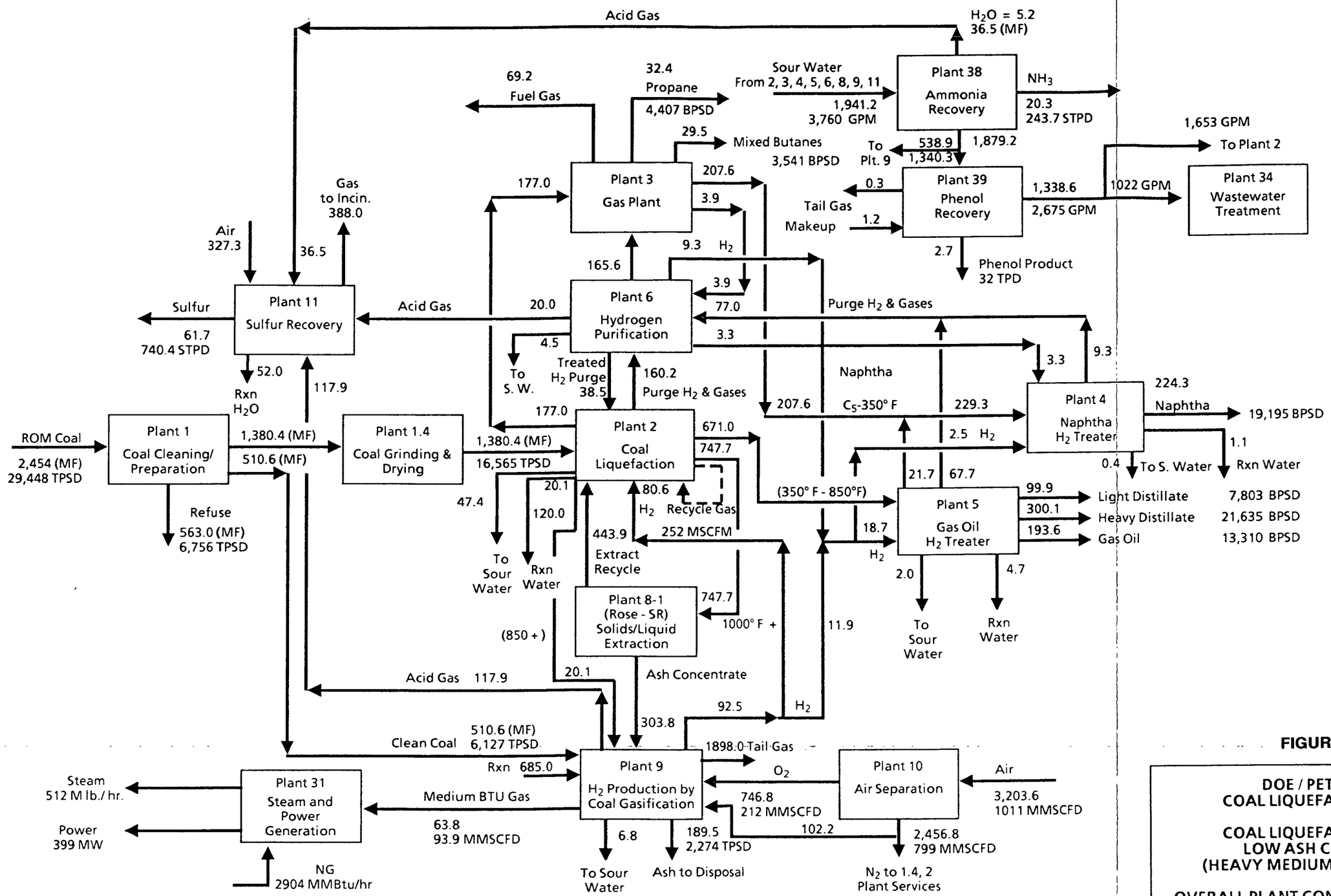

Revised 02/03/93

1091056-1

Notes:

1. Flow rates are in MLB/HR unless noted and on dry basis
2. Minor streams including steam, water, sour water, and make-up amine are not shown on this diagram
3. Flow rates around plants #38, 39, 34 are shown on wet basis

FIGURE 2.4

DOE / PETC
COAL LIQUEFACTION

COAL LIQUEFACTION
LOW ASH COAL
(HEAVY MEDIUM) OPTION

OVERALL PLANT CONFIGURATION
AND
OVERALL MATERIAL BALANCE

TABLE 2.4

OVERALL UTILITY SUMMARY

11-Dec-91

COAL LIQUEFACTION – LOW ASH COAL (HEAVY MEDIUM) OPTION

Plant No.	PLANT NAME	Fuel Gas MMbtu/hr	Electric Power KW	Steam Psig, Lb/hr 600 Sup @720 F	600 @489 F	150 @366 F	50 @298 F	Cond/BFW Net Cons lb/hr	Cooling Water gpm	Sour Water gpm	Waste Water gpm	Makeup Water gpm	Air scfm	Nitrogen scfm
	PROCESSING UNITS													
1-01	Coal Cleaning and Handling		12,402								1,179			
1.4	Coal Griding and Drying	471	11,733						232				5,769	72,703
2	Coal Liquefaction	1,090	58,988	5,565	(149,090)	(90,095)	56,115	424,715	8,095	(2,426)				715
3	Gas Plant	(1,473)	913		396,610		17,186	(413,796)	21,955	(5)				
4	Naphtha Hydrotreater	74	1,073		26,622			(26,622)	2,564	(40)		(38)		
5	Gas Oil Hydrotreater	162	2,179		65,048	(33,864)		(26,184)	8,228	(88)		(73)		
6	Hydrogen Purification		43,944				59,473	(59,473)	6,662	(70)		(60)		
8	Critical Solvent Deashing	175	3,595			20,945				(42)				
9	H2 Production by Coal Gasification	(981)	63,210		(291,800)	(762,900)	(781,300)	1,836,000	52,600	(966)	95	(1,196)		23,611
10	Air Seperation		159,994											(555,197)
11	By-product Sulfur Recovery	69	3,062		59,956	(186,541)	54,468	72,117	8,126	(123)				
ALL	Common Users			73000		40000	90000	(193,000)				(532)	9231	
	Sub Total (Process)	(413)	361,093	78,565	107,346	(1,012,455)	(504,058)	1,613,757	108,462	(3,760)	1,274	(1,899)	15,000	(458,168)
	OFFSITES													
19	Relief and Blowdown		19											
20	Tankage		6,758			22,000	3,300	(25,300)	100					
30	Electrical Distribution													
31	Steam and Power Generation	3,885	(399,259)	(511,963)		386,470	436,191	(593,853)	65,667		(322)	(889)		
32	Raw, Cooling and Potable Water Systems		13,652						(255,521)		(1,022)	12,044		
33	Fire Protection		44											
34	Sewage & Effluent Treatment		7,313				3,000	(3,000)				(1,022)		
35	Instrument & Plant Air Systems		2,894										(15,000)	
36	Purge and Flish Oil System		258											
37	Solid Waste Disposal		48								90			
38	Ammonia Recovery		1,531		326,052	581,269		(907,321)	76,821	3,760				
39	Phenol Recovery		814			22,716	61,567	(84,283)	4,471		(1,022)			
Other	Bldg 41,42, Light, Etc.		4835											
	Natural Gas Imported	(3,472)												
	Off Site BL and Evapration										1,002	(8,234)		
	Sub Total (Offsite)	413	(361,093)	(511,963)	326,052	1,012,455	504,058	(1,613,757)	(108,462)	3,760	(1,274)	1,899	(15,000)	0
	GRAND TOTAL	0	0	(433,398)	433,398	0	0	0	0	0	0	0	0	(458,168)

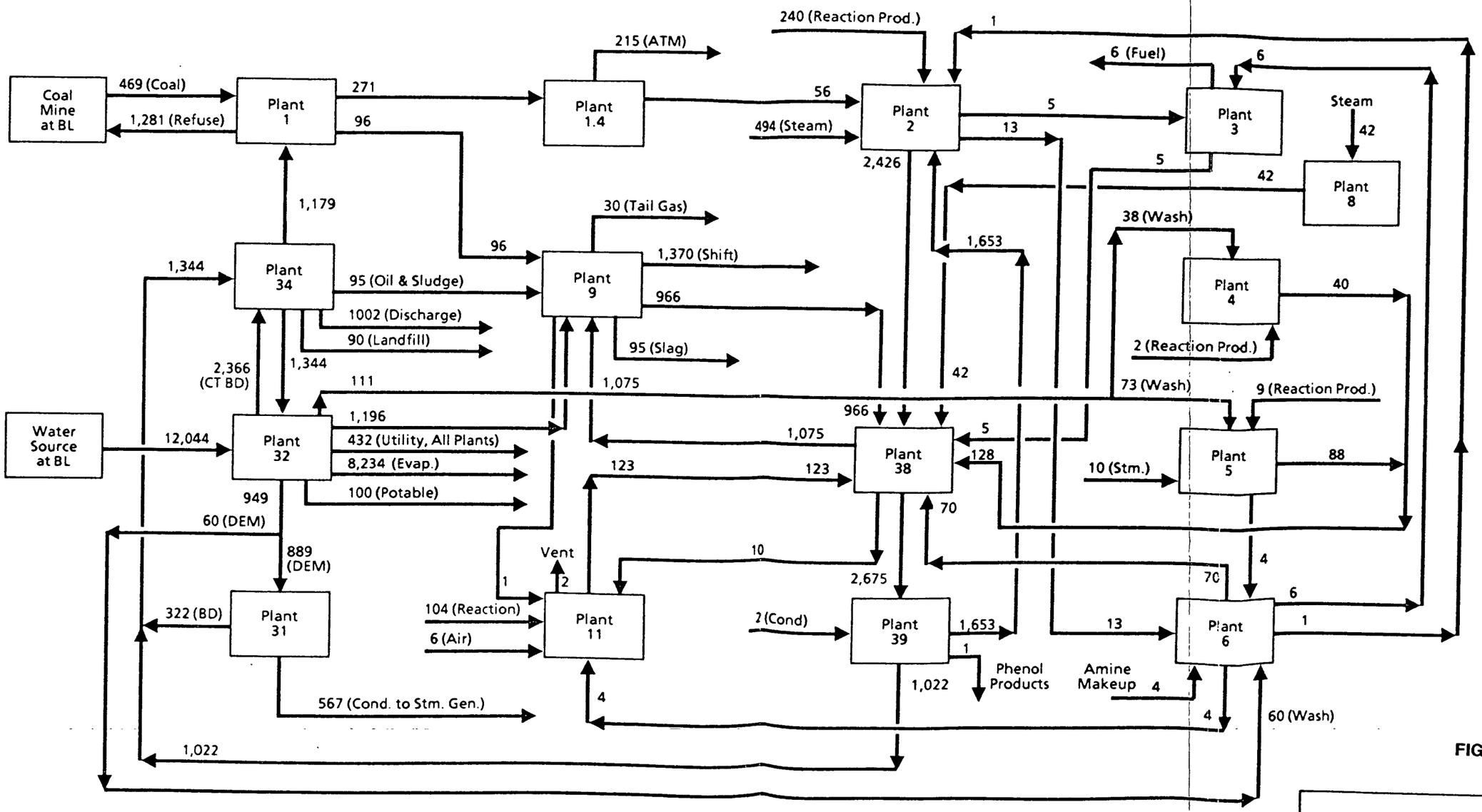

FIGURE 2.5

Notes:

1. Flows are for normal operation and in GPM

DOE / PETC
COAL LIQUEFACTION

LOW ASH COAL
(HEAVY MEDIUM) OPTION

OVERALL WATER FLOW
DISTRIBUTION

1091056-1

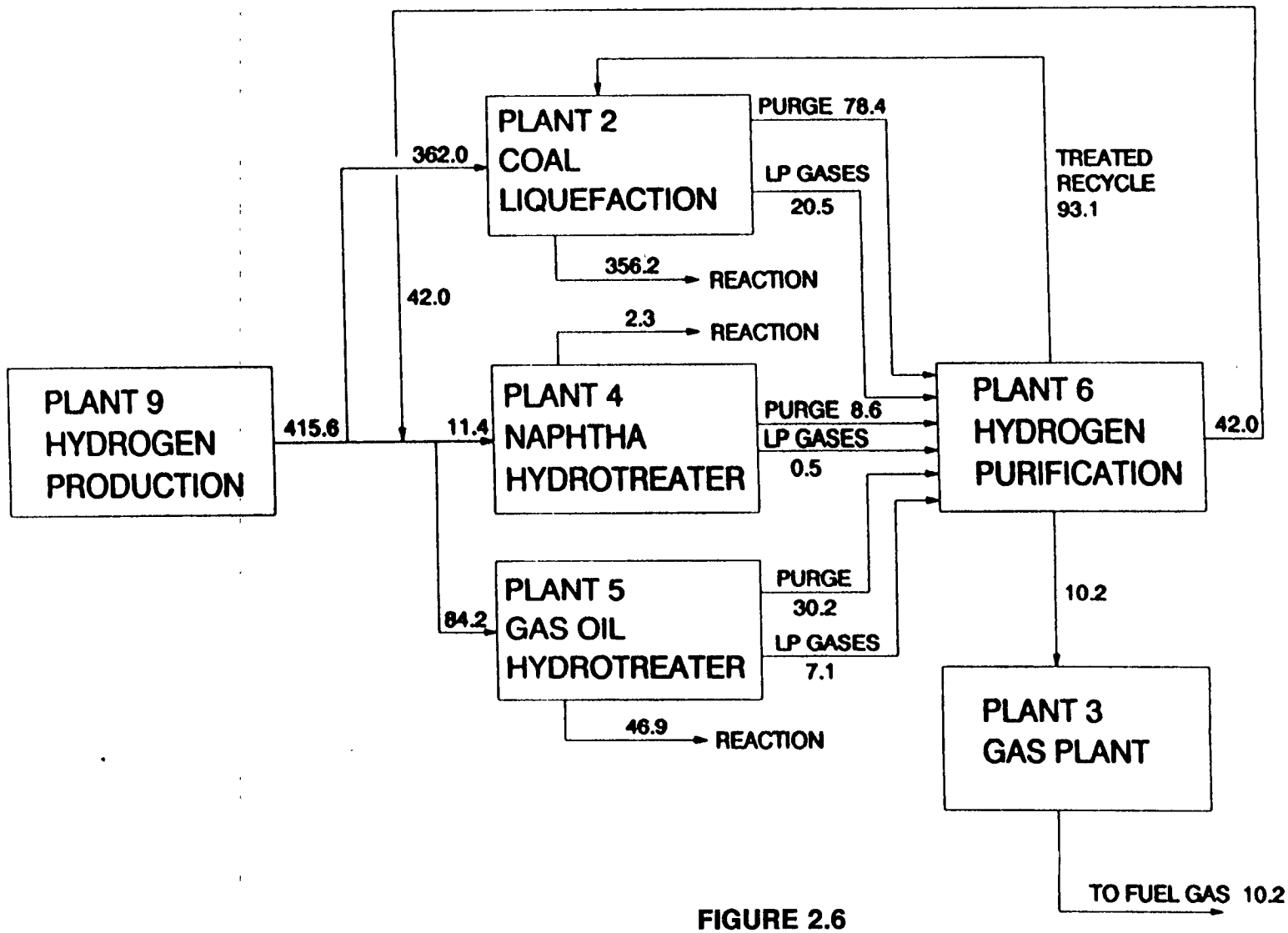

FIGURE 2.6

OVERALL HYDROGEN FLOW DISTRIBUTION

LOW ASH COAL (HEAVY MEDIUM) OPTION

NOTES:
Hydrogen flow rates are in MMSCFD (Pure H2)

H2_FLOW6.DRW 8/28/91

3. OPTION 2

3. Option 2 (Liqu faction Feed Coal Cleaning by Spherical Agglom ration)

3.1 Design Basis, Criteria and Considerations

In this option, as discussed earlier, the feed coal to liquefaction reactor is cleaned by Spherical Agglomeration technique instead of Jig cleaning (baseline case). The coal feed to gasifier, however, is cleaned by Jig (same as the base case).

The design basis, criteria and considerations for Plant 1 of this option is same as the base case with a few exceptions. These exceptions are mentioned below.

Ash content of clean coal:	3.8 wt%, dry basis
Product size from Plant 1:	Shown in below

Particle Size	Wt%
1-1/2" x 28	34.7
3/8" (agglomerates)	65.3
Moisture	10.8

The directly affected plant for this option is the coal cleaning and handling plant (Plant 1). The indirectly affected plants are: coal grinding and drying plant (Plant 1.4), atmospheric and vacuum towers of the coal liquefaction plant (Plant 2), critical solvent deashing unit (Plant 8), hydrogen production plant (Plant 9), steam and power generation plant (Plant 31), sewage and water treatment plant (Plant 34), ammonia recovery plant (Plant 38) and phenol recovery plant (Plant 39).

In developing this option several key assumptions were made. These are:
1) The reactivity of coal (on MAF basis) in the liquefaction reactor is same as that of the base case coal, which means that the conversion and the product slate from the liquefaction reactor section are same as those applicable to the base case. This is a very week assumption. However, in absence of any suitable and available data it was decided to make use of this assumption for this study.
2) Vacuum tower bottoms stream has the same composition as the base case.
3) 850+ fraction is removed from the vacuum tower by adding a side draw at lower section of the vacuum tower and the fraction is sent to gasifier, Plant 9.

3.2 Process Description/Process Flow Diagram for the Directly Affected Plant (Plant 1-02):

Figure 3.1 is a simplified Block Flow Diagram for coal cleaning by Spherical Agglomeration, Plant 1.02. The more detailed description of this plant is shown in Figures 3.2 and 3.3. Figure 3.2 is the process flow diagram of the conventional cleaning section of the plant whereas Figure 3.3 is the process flow diagram of the agglomeration section of the same plant.

This process combines conventional technology and spherical agglomeration. At first the crushed raw coal is cleaned to produce a low ash (less than 4 percent ash) clean coal, a high ash refuse, and a middlings product. The middlings product is then ground and agglomerated. By recovering the naturally occurring low ash components (26 percent of the plant feed) as final clean coal and rejecting the obvious high ash refuse (10 percent of the plant feed), the more expensive grinding and agglomeration is used for only 64 percent of the plant feed.

Conventional Cleaning Section: ROM coal, crushed to 1-1/2 inch x 0, is wet screened into three size fractions, 1-1/2 x 1/4, 1/4 x 28 mesh and 28 mesh x 0 by a pre-wet screen. The two coarser size fractions are then cleaned in coarse and fine coal heavy medium (HM) vessels, respectively. These are operated at a specific gravity of 1.3 to obtain a clean coal ash content of less than 4 percent. The clean coal is dewatered in centrifuges and sent to storage.

The sinks from the fine coal HM vessel and the crushed sinks from the coarse coal HM vessel are then deslimed at 28 mesh by desliming screens which also receive the fine coal (28 mesh x 0) slurry from the pre-wet screen. The deslimed (1/4 inch x 28 mesh) coal is cleaned in HM cyclones operating at a specific gravity of 1.8.

The float stream (middlings) is dewatered in centrifuges and sent to a surge bin located in the grinding and agglomeration area.

The sinks from the HM cyclones (coarse refuse) is sent to the Coarse Refuse Handling section.

The underflow slurry (28 mesh x 0) from the desliming screens is pumped to a bank of classifying cyclones for a 100 mesh classification. The cyclone overflow consisting of high ash clay slime and water is sent to a refuse thickener for thickening and water recovery. The thickener underflow, the fine refuse, is pumped to a settling pond.

The underflow from the classifying cyclones (28 mesh x 100 mesh) is dewatered in fine coal centrifugal dryers and sent to the agglomeration surge bin.

FIGURE 3.1

SIMPLIFIED BLOCK FLOW DIAGRAM FOR PLANT 1-01

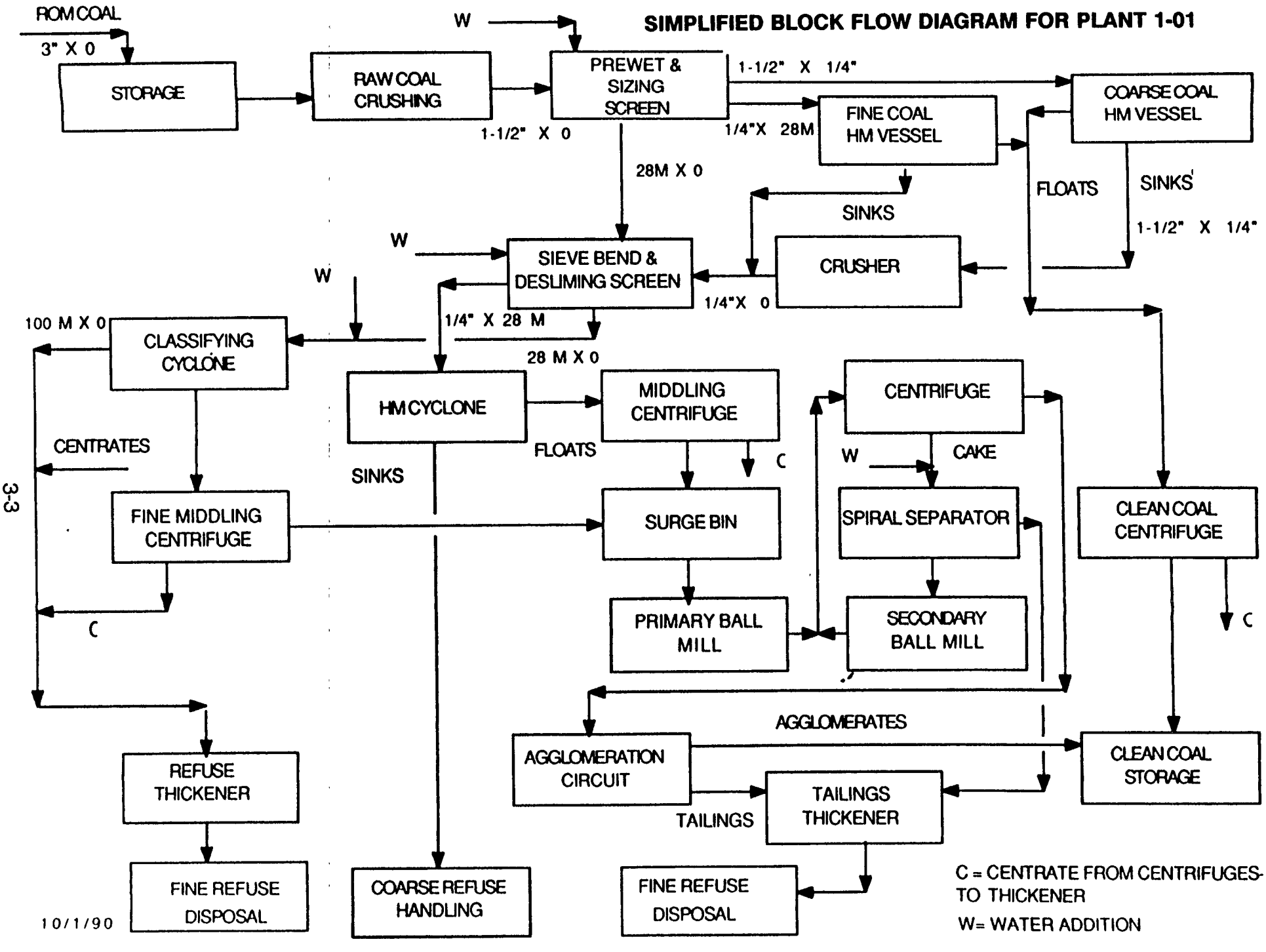

10/1/90

This drawing and the design it covers are property of BECHTEL. They are merely loaned and on the borrower's express agreement that they will not be reproduced, copied, loaned, exhibited, nor used except in the United way and private use permitted by any written consent given by the lender to the borrower.

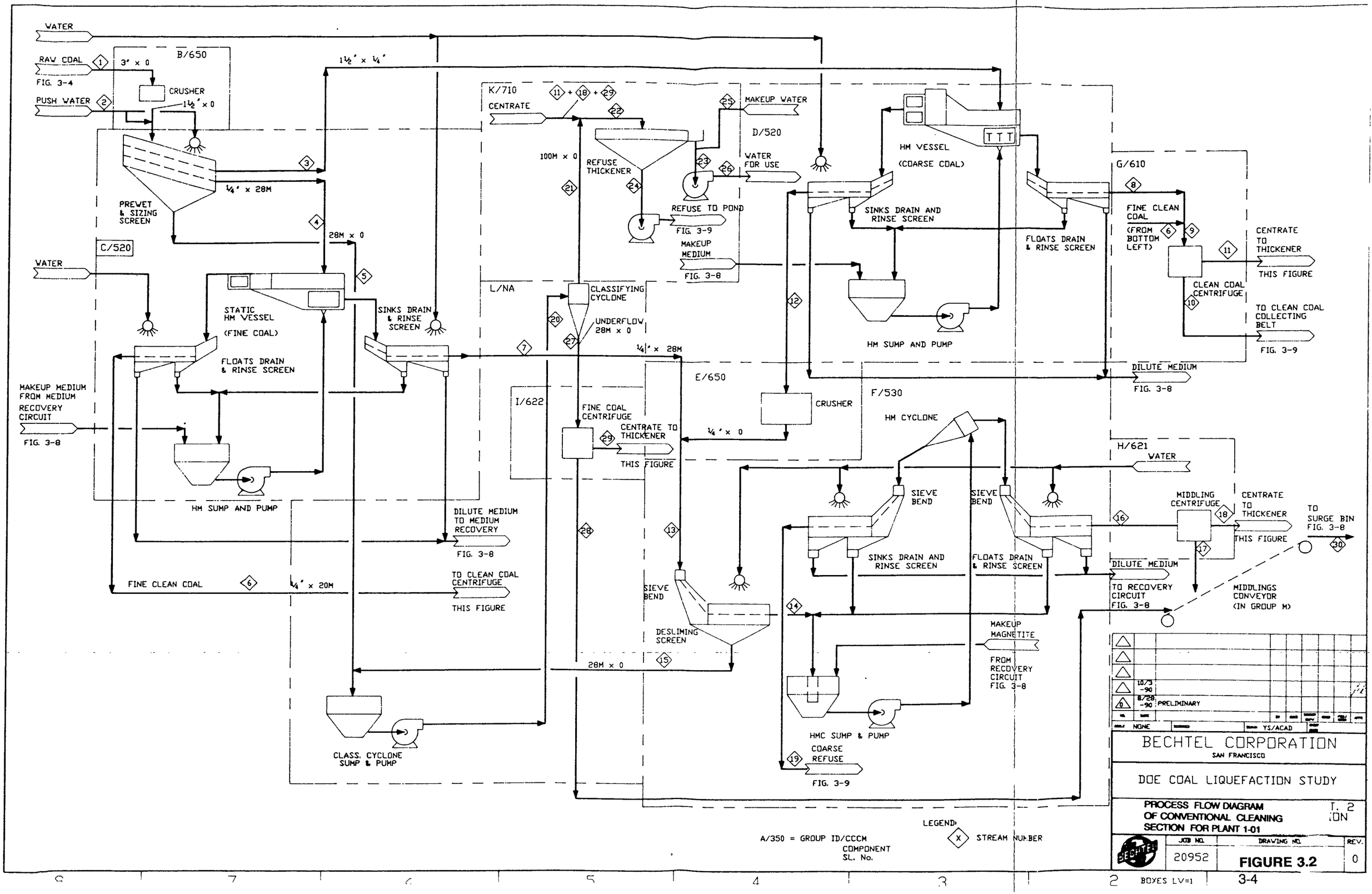

This drawing and the design it covers are property of BECHTEL. They are merely loaned and on the borrower's express agreement that they will not be reproduced, copied, loaned, exhibited, nor used except in the limited way and private use permitted by any written consent given by the lender to the borrower.

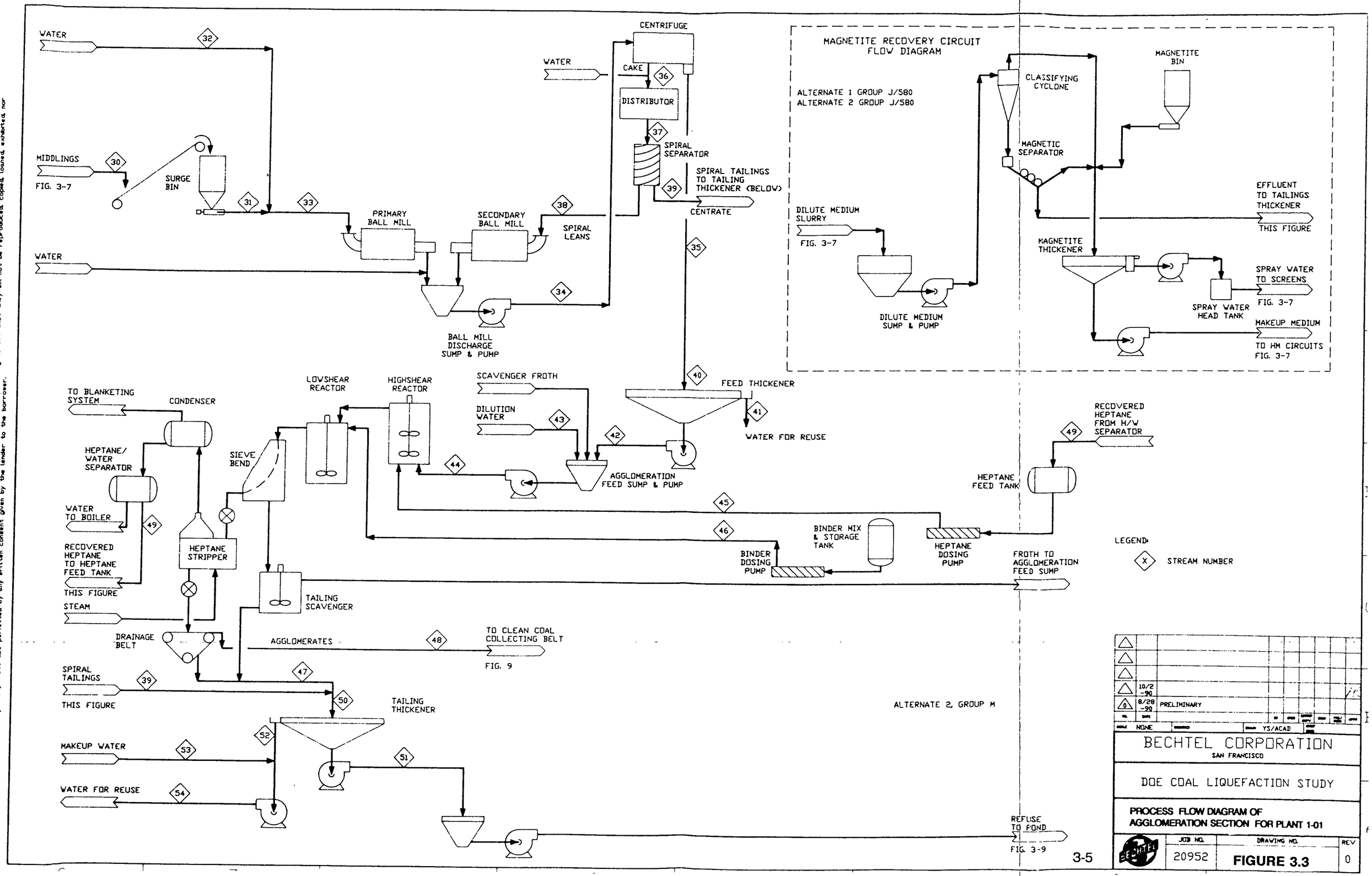

Agglomeration Section: The agglomeration section includes the grinding facility. The Bechtel developed 'Selective Grinding' system is used to grind the feed to the agglomeration reactors to a size of 45 microns (90 percent passing).

The grinding system consists of a primary ball mill, secondary ball mills, solid bowl centrifuges, and spiral classifiers. The primary ball mill receives feed from the surge bin and grinds the coal in water to a size of approximately 80 percent passing 100 mesh. The product from the primary mill together with that from the secondary ball mills is fed to solid bowl centrifuges for a size classification at 45 microns. The concentrate from the centrifuge is the ground product which will be sent to the agglomeration circuit. The centrifuge cake which contains partially ground particles is then diluted and cleaned in a spiral separator to remove hard and high ash particles. The spiral sink product is rejected as refuse. The clean coal from the spiral separator is ground in the secondary ball mills. The product from the secondary ball mill is pumped to the solid bowl centrifuges which form a closed circuit with the secondary ball mills.

The ground product is agglomerated using heptane as the bridging liquid. Subsequently the agglomerates are enlarged to approximately 3 mm using asphalt as binder. The agglomerates are separated from the associated water and mineral slurry (tailings). The tailings stream is thickened in a thickener and clarified water recovered for reuse.

The agglomerate product is steam stripped to remove heptane and then dewatered, and sent to the storage.

3.3 Material Balance for the Directly Affected Plant

The material balance for this directly affected plant (Plant 1.02) is shown in Table 3.1 through 3.3. In addition the overall material balance per train of Plant 2 (Coal Liquefaction Plant, the heart of this complex) is shown in Figure 3.4.

TABLE 3.1

COAL CLEANING: ALTERNATE 2 (SPHERICAL AGGLOMERATION)

OVERALL MATERIAL BALANCE PER TRAIN FOR DIRECTLY AFFECTED PLANT (PLANT 1-02) (CONVENTIONAL SECTION)

		Material In			Material Out				
		Raw Coal	Make-up Water	Total In	Clean Coal	Coarse Refuse	Fine Refuse	Middlings	Total Out
STREAM #		1	25		10	19	24	30	
Coal	TPH	627.6	0.0	627.6	161.1	15.7	43.9	406.9	627.6
Water	TPH	59.9	126.0	185.9	12.0	2.5	131.9	39.5	185.9
	GPM	239.6	504.2	743.8	48.1	10.0	527.7	158.0	743.8
Total Stream	TPH	687.5	126.0	813.5	173.1	18.2	175.8	446.4	813.5
Ash	TPH	137.5	0.0	137.5	6.0	10.7	26.8	94.0	137.5

NOTE: (1) This Section Of The Plant Operates Two Shifts A Day With 14.5 Hours On Stream Per Day, 5 Days A Week And 50 Weeks A year

(2) Stream #1 Is Raw Coal Entering The Coal Cleaning Plant

(3) Stream #10 Is The Clean Coal Leaving The Conventional Section Of The Plant

TABLE 3.2

COAL CLEANING: ALTERNATE 2 (SPHERICAL AGGLOMERATION)

OVERALL MATERIAL BALANCE PER TRAIN FOR DIRECTLY AFFECTED PLANT (PLANT 1-02) (GRINDING AND AGGLOMERATION SECTION)

		Material In					Material Out		
		Solid Feed	Make-up Water	Binder	Total In		Agglo-merates	Tailings	Total Out
STREAM #		31	53	46			48	51	
Coal	TPH	270.9	0.0	0.0	270.9		202.7	68.2	270.9
Binder	TPH	0.0	0.0	6.0	6.0		6.0	0.0	6.0
Water	TPH	26.4	182.7	0.0	209.1		28.7	180.4	209.1
	GPM	105.6	731.2	0.0	836.8		120.3	716.5	836.8
Total Stream	TPH	297.3	182.7	6.0	486.0		237.5	248.6	486.0
Ash	TPH	59.8	0.0	0.0	59.8		7.3	52.5	59.8

NOTE: (1) This Section Of The Plant Operates Three Shifts A Day With 21.75 Hours On Stream Per Day, 5 Days A Week And 50 Weeks A Year

TABLE 3.3

COAL CLEANING: ALTERNATE 2 (SPHERICAL AGGLOMERATION) OVERALL MATERIAL BALANCE PER TRAIN FOR PLANT 1-02

	Material In						Material Out							
	Raw Coal	Make-up Water		Total Make-up Water	Binder	Total In	Clean Coal	Agglo-merate	Total Clean Coal	Coarse Refuse	Fine Refuse	Tailings	Total Refuse	Total Out
STREAM #	1	25	53		46		10	48		19	24	51		
Coal TPD	9106	0	0	0	0	9106	2336	4400	6736	228	640	1502	2370	9106
Binder TPD	0	0	0	0	137	137	0	137	137	0	0	0	0	137
Water TPD	868	1820	3981	5801	0	6669	167	662	829	33	1916	3891	5840	6669
Kilo GPD	209	439	956	1395	0	1604	41	156	198	9	465	932	1406	1604
Total Stream TPD	9974	1820	3981	5801	137	15912	2503	5198	7697	261	2556	5393	8215	15912
Ash TPD	1994	0	0	0	0	1994	91	162	253	152	394	1196	1742	1994

Note: Each Train Will Deliver Approximately 1.72 MM TPY Of Clean Coal (MF) To Storage

3.4 Utility Summary for the Directly Affected Plant (Plant 1-02)

The utility requirement for this liquefaction feed coal cleaning by spherical agglomeration plant is shown below in Table 3.4.

Table 3.4

Utility Requirement for Plant 1-02

Electric Power, Kw	69,975	
Fuel Gas, MM Btu/hr	518	
Air, Scfm	5,481	*
Nitrogen, Scfm	69,075	*

* Air and nitrogen required are for indirectly affected Plant 1.4.

3.5 Overall Impact

The overall impact on this entire complex due to the inclusion of Plant 1-02 (Liquefaction Feed Coal Cleaning by Spherical Agglomeration) instead of coal cleaning by Jig (Plant 1, in base case) has been quantified based on throughput adjustments to all indirectly affected plants. Such effects are included in this report in terms of overall plant configuration and Overall Material Balance (sub-section 3.5.1), Overall Utility Summary (sub-section 3.5.2), Overall Waterflow Distribution (sub-section 3.5.3) and Overall Hydrogen Flow Distribution (sub-section 3.5.4).

3.5.1 Overall Plant Configuration and Overall Material Balance

The overall plant configuration and overall material balance for this option are shown in the same figure, Figure 3.5.

3.5.2 Overall Utility Summary

The overall utility summary for this option os shown in Table 3.5.

3.5.3 Overall Water Flow Distribution

The overall water flow distribution for the entire complex is shown in Figure 3.6.

3.5.4 Overall Hydrogen Flow Distribution

The overall hydrogen flow distribution for the entire complex is shown in Figure 3.7.

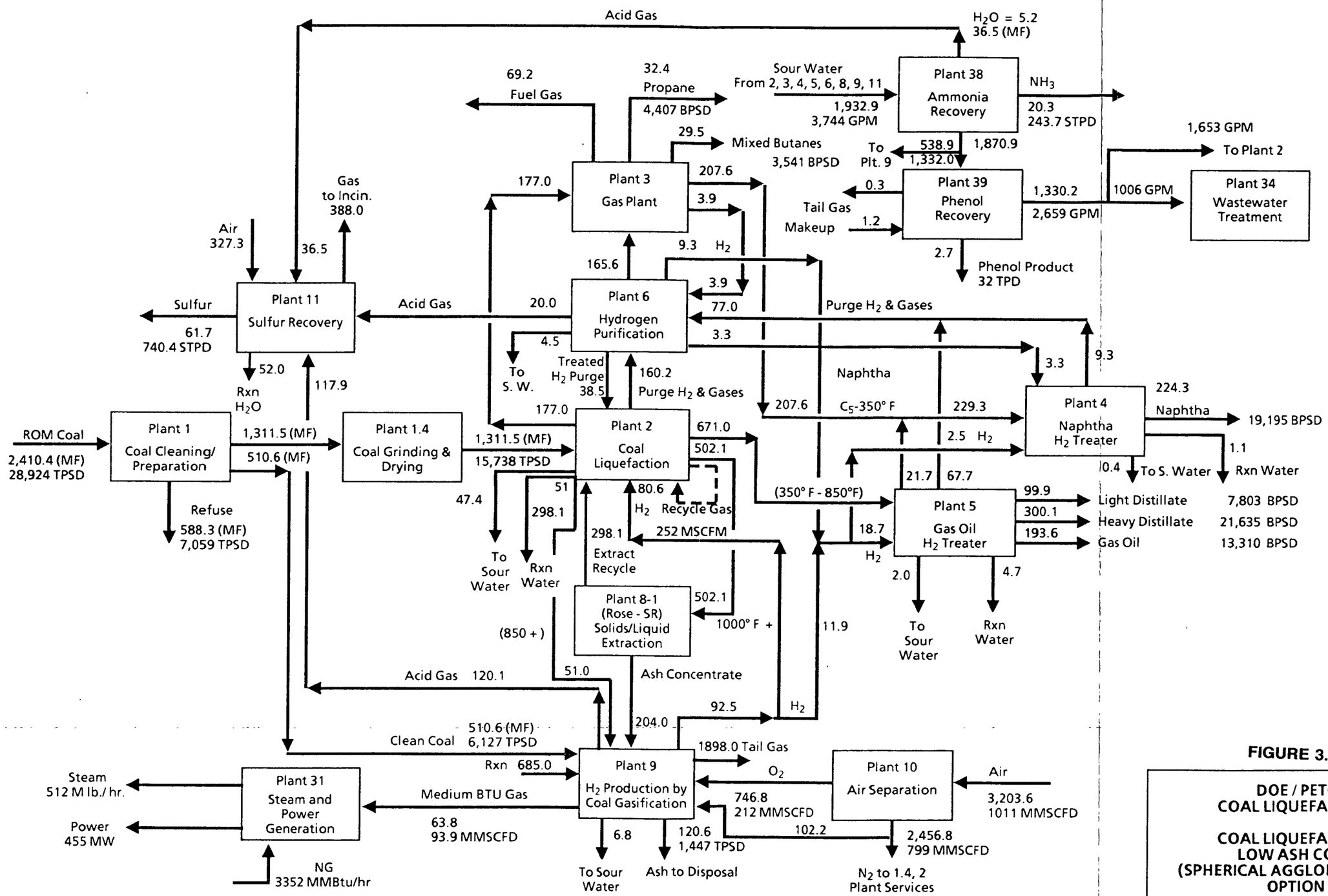

Revised 02/03/93

1091056-1

Notes:

1. Flow rates are in MLB/HR unless noted and on dry basis
2. Minor streams including steam, water, sour water, and make-up amine are not shown on this diagram
3. Flow rates around plants #38, 39, 34 are shown on wet basis

FIGURE 3.5

DOE / PETC
COAL LIQUEFACTION

COAL LIQUEFACTION
LOW ASH COAL
(SPHERICAL AGGLOMERATION)
OPTION

OVERALL PLANT CONFIGURATION
AND
OVERALL MATERIAL BALANCE

TABLE 3.5

OVERALL UTILITY SUMMARY

11-Dec-91

COAL LIQUEFACTION – LOW ASH COAL (SPHERICAL AGGLOMERATION) OPTION

Plant No.	PLANT NAME	Fuel Gas MMbtu/hr	Electric Power KW	Steam Psig, Lb/hr 600 Sup @720 F	600 @489 F	150 @366 F	50 @298 F	Cond/BFW Net Cons lb/hr	Cooling Water gpm	Sour Water gpm	Waste Water gpm	Makeup Water gpm	Air scfm	Nitrogen scfm
	PROCESSING UNITS													
1-02	Coal Cleaning and Handling	518	69,975								2,469			
1.4	Coal Griding and Drying	447	11,148						221				5,481	69,075
2	Coal Liquefaction	1,090	58,988	5,565	(149,090)	(90,095)	56,115	424,715	8,095	(2,424)				715
3	Gas Plant	(1,473)	913		396,610		17,186	(413,796)	21,955	(5)				
4	Naphtha Hydrotreater	74	1,073		26,622			(26,622)	2,564	(40)		(38)		
5	Gas Oil Hydrotreater	162	2,179		65,048	(33,864)		(26,184)	8,228	(88)		(73)		
6	Hydrogen Purification		43,944				59,473	(59,473)	6,662	(70)		(60)		
8	Critical Solvent Deashing	117	2,414			14,064				(28)				
9	H2 Production by Coal Gasification	(981)	63,210		(291,800)	(762,900)	(781,300)	1,836,000	52,600	(966)	95	(1,196)		23,611
10	Air Seperation		159,994											(555,197)
11	By-product Sulfur Recovery	69	3,062		59,956	(186,541)	54,468	72,117	8,126	(123)				
ALL	Common Users			73000		40000	90000	(193,000)				(532)	9519	
	Sub Total (Process)	23	416,900	78,565	107,346	(1,019,336)	(504,058)	1,613,757	108,451	(3,744)	2,564	(1,899)	15,000	(461,796)
	OFFSITES													
19	Relief and Blowdown		19											
20	Tankage		6,758			22,000	3,300	(25,300)	100					
30	Electrical Distribution													
31	Steam and Power Generation	4,333	(455,066)	(511,963)		393,351	436,191	(593,853)	65,667		(322)	(875)		
32	Raw, Cooling and Potable Water Systems		13,652						(255,510)		(1,908)	12,916		
33	Fire Protection		44											
34	Sewage & Effluent Treatment		7,313				3,000	(3,000)				(1,908)		
35	Instrument & Plant Air Systems		2,894										(15,000)	
36	Purge and Flish Oil System		258											
37	Solid Waste Disposal		48								90			
38	Ammonia Recovery		1,531		326,052	581,269		(907,321)	76,821	3,744				
39	Phenol Recovery		814			22,716	61,567	(84,283)	4,471		(1,006)			
Other	Bldg 41,42, Light, Etc.		4835											
	Natural Gas Imported	(4,356)												
	Off Site BL and Evapration										582	(8,234)		
	Sub Total (Offsite)	(23)	(416,900)	(511,963)	326,052	1,019,336	504,058	(1,613,757)	(108,451)	3,744	(2,564)	1,899	(15,000)	0
	GRAND TOTAL	0	0	(433,398)	433,398	0	0	0	0	0	0	0	0	(461,796)

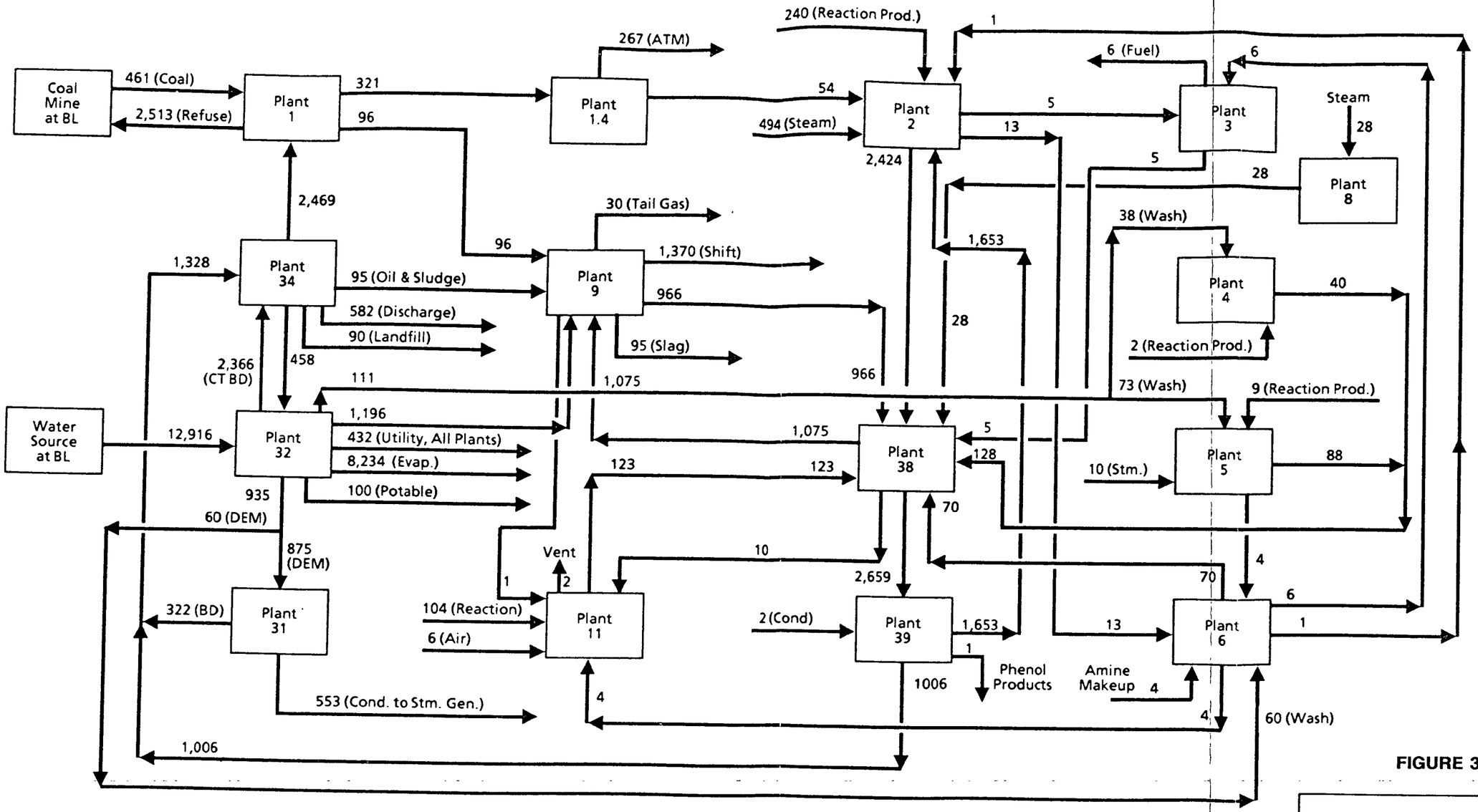

Notes:

1. Flows are for normal operation and in GPM

FIGURE 3.6

DOE / PETC
COAL LIQUEFACTION

LOW ASH COAL (SPHERICAL AGGLOMERATION) OPTION

OVERALL WATER FLOW DISTRIBUTION

1091056-1

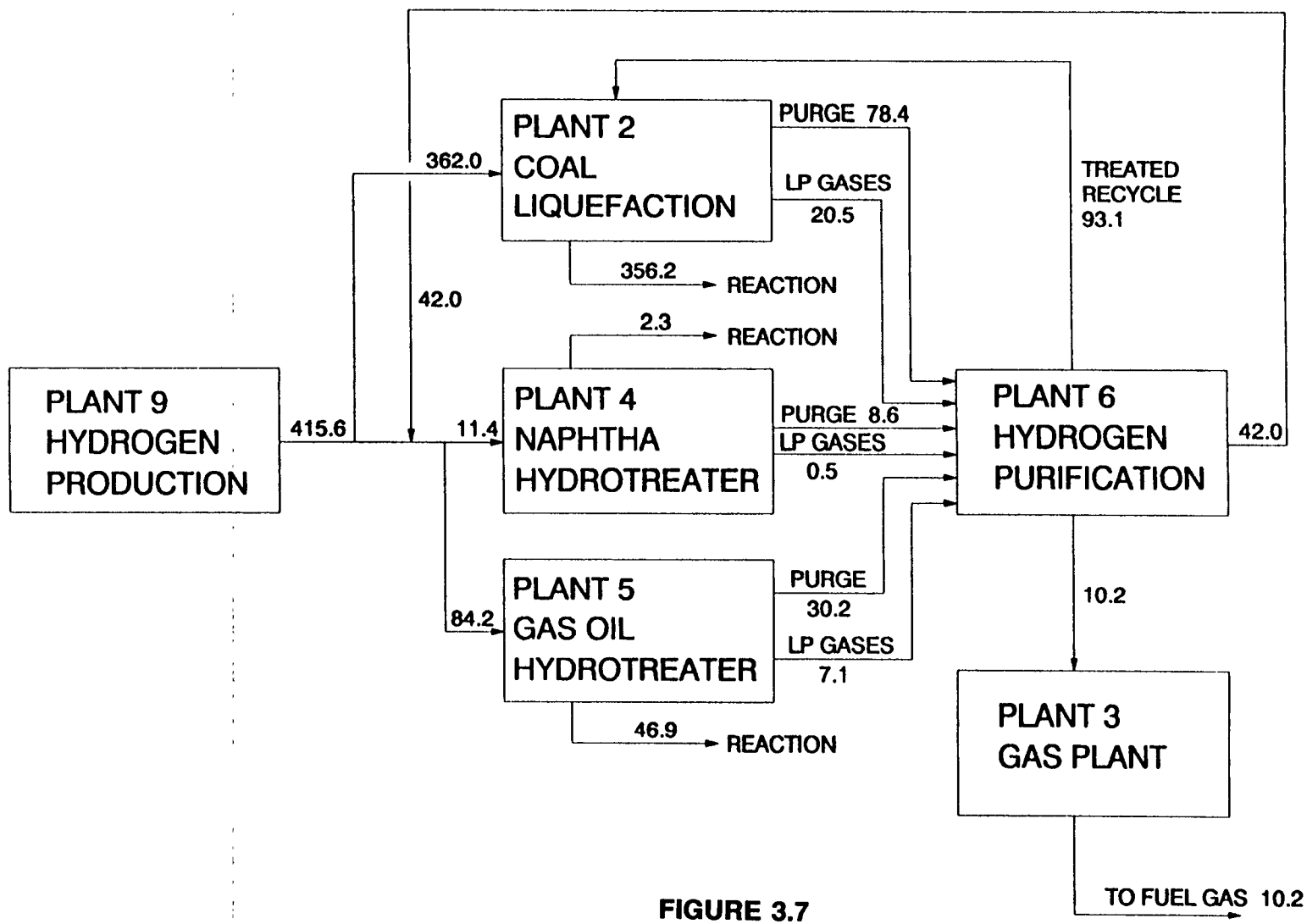

FIGURE 3.7

NOTES:
Hydrogen flow rates are in MMSCFD (Pure H2)

OVERALL HYDROGEN FLOW DISTRIBUTION
LOW ASH COAL (SPHERICAL AGGLOMERATION) OPTION

H2_FLOW5.DRW 8/28/91

4. OPTION 3

4. Option 3 (Th rmal-Catalytic Liquefaction R actor Configuration)

4.1 Design Basis, Criteria and Considerations

In this option, as discussed earlier, the reactor configuration is changed from the base case configuration (catalytic-catalytic) to thermal-catalytic, where first stage is the thermal reactor and second stage is the catalytic reactor.

This option was developed utilizing the following methodology for reactor sizing:

Use Wilsonville Run 250 D for operating conditions, conversion and yields. The coal liquefaction overall yield is shown in Table 4.1.

Maintain total coal feed rate through Plant 2 (Coal Liquefaction Plant) same as in base case.

Compare the space velocity (based on catalyst volume) between second stage catalytic reactor for the baseline and this option (1.12 vs 0.72 Lb MAF Coal/Hr./LB catalyst, respectively). Refer to Table 4.2.

- Calculate the reactor volume and the number of reactor trains to account for the change in space velocity mentioned above for the second stage reactor (catalytic). Note that directionally the reactor volume per train will be higher than the base case. Also HRI design indicated that for the baseline design the weight of the reactor is the primary constrain for reactor size, and consequently the number of trains required for this operation will be more than those for the base case.

Calculate the reactor height keeping the maximum reactor diameter allowable based on weight.

Include ebullating bed pump for thermal reactor to induce proper mixing to avoid unacceptable axial temperature gradient.

- Calculate corresponding coal throughput per train.

Calculate the thermal reactor volume, (first stage) using Wilsonville experimental space velocity data (Run 250 D) and the number of trains selected.

Keep the diameter of the thermal reactor (first stage) same as that of the catalytic reactor (second stage). Verify by using gas velocity correlation. Diameter being known, calculate height of the reactor from volume, already calculated.

- The wall thickness will be assumed to be same as HRI design. The potential minor difference is deemed to have insignificant impact on plant cost.

TABLE 4.1

COAL LIQUEFACTION YIELD

Yields wt% MAF Coal Feed	Overall
H_2S	3.34
H_2O	9.51
NH_3	1.63
CO	0.07
CO_2	0.16
C1	2.69
C2	2.09
C3	2.22
C4	0.79
C5-350°F	12.51
350-450°F	6.31
450-650°F	21.35
650-850°F	17.94
850-1000°F	5.00
1000°F+	13.08
Unconverted Coal	7.21
Phenols	0.30
Ash	12.96
H2 Consumption	-6.20

TABLE 4.2

Comparison of Critical Parameter for Baseline and Therm-cat Option

Parameter	Baseline Design (Run 257E)	Thermal-Cat Option (Run 250D)
Temp, °F		
Stage 1	790	825
Stage 2	760	740
Coal Space Velocity (Lb MAF Coal/Hr./Lb. Cat)		
Stage 1	1.12	(37.1)*
Stage 2	1.12	0.72

* The number in parenthesis is in Lb MAF Coal/Hr./Cubic Ft. Reactor Volume.

The directly affected plant is, of course, the liquefaction plant, Plant 2. The indirectly affected plants are the remaining plants in the complex.

In developing this option a key assumption was made. This assumption is:

> Extra 850 - 1000° F (as compared to the base case yield) is removed from the vacuum tower by adding a side draw at lower section of the vacuum tower. The side draw stream is sent to the gasifier, Plant 9. This allows the same composition of feed to Plant 8, the critical solvent deashing unit (Kerr McGee's ROSE SR technology)

Directly affected Plant (Plant 2):

Reactor sizing for both reactors (first stage thermal and second stage catalytic) are shown in Table 4.3.

TABLE 4.3

REACTOR SIZING

Service	Dia. (ID)[1] Ft.	Length Ft.	Thickness Inches	Weight ST	Number of Trains
First Stage Reactor	15	38	11.6	550	7
Second Stage Reactor	15	90	11.6	1300	7

Material of Construction: (same as base case)
2-1/4 Cr. 1 Mo with 374SS overlay, refractory lined (6").

(1) Metal inside diameter

4.2 Proc ss Descripti n/Proc ss Flow Diagram for the Dir ctly Aff ct d Plant

The plant consists of three sections. These are: Slurry Preparation and Liquefaction Reaction, Primary Separation and Product Fractionation. These three sections are schematically shown in process flow diagrams, Figures 4.1 through 4.3, respectively.

Slurry Preparation and Liquefaction Reaction

Coal, which has been pulverized and dried in Plant 1.4, is mixed with recycled oil from the downstream plants to form a slurry for feed to the coal liquefaction reactors. The recycle oil used as solvent for the process comes from four sources: slurry oil from the Slurry Hold Tank, slurry oil from atmospheric bottoms, the lower sidestream product (850-1000°F) from the Vacuum Distillation Tower, and the extract product from the Critical Solvent Deashing Plant (ROSE-SR), Plant 8.

Slurry preparation consists of prewetting and mixing. The prewetting occurs in a twin screw mixer in which the 850-1000°F product, which have been cooled in air-fin exchanger (E102) to 180°F, are sprayed on the pulverized coal as it is being turned over in the mixer. This mixture is then fed into the Mix Tank (C101) where it is mixed with the solvent from the other three sources. Those oils are cooled in an exchanger producing 600 psig steam (E101) before entering the Mix Tank. The Mix Tank is equipped with a high-speed agitator. Coal slurry flows to the Slurry Surge Tank (C102) which also contains a mixer to keep the coal in the slurry. The Surge Tank is vented through a scrubber (C103), where the vapors are contacted with a portion of the solvent. The vapors from the scrubber are cooled in an air-fin exchanger (E103) to 130°F and separated into three phases in the Slurry Overhead Receiver (C104). The vapor from that drum is sent as fuel to the Hydrogen Heater (F102). The hydrocarbon liquid is sent to the Atmospheric Tower. The sour water stream is withdrawn to the Sour Water Flash Drum (C116) and eventually to Plant 34.

Material from the Slurry Surge Tank is pumped by two Slurry Booster Pumps (G103/G104) operating in parallel to the suction of three high pressure reciprocating Reactor Feed Pumps (G105/G106/G107) in parallel. About one-third of the flow from the Slurry Booster Pumps is recycled back to the Slurry Surge Tank to help eliminate dead spots in the tank where coal can settle out of the slurry. The Reactor Feed Pumps move the coal slurry through the Slurry Feed Heater (F101) to the reactors.

As shown on the attached Figure 4.1, the make-up hydrogen stream from coal gasification plant (Plant 9) is combined with the recycle hydrogen stream from Plant 6. A portion of the combined stream is then mixed with the recycle hydrogen stream from the Recycle Hydrogen Compressor (K101) and is first preheated by exchange against the reactor effluent in exchangers E106 and E107. The other portion of the combined hydrogen stream is injected into the coal slurry feed at the inlet to the Slurry Feed Heater (F101) in order to reduce the possibility of coke formation in the heater. Injection of hydrogen into the coal feed slurry also tends to reduce the viscosity of the slurry mixture and results in a lower pressure drop in the slurry feed heater coil. The hydrogen and coal slurry mixture is heated and then fed to the First Stage Reactor

(C105). This reactor is thermal in nature and without any catalyst. The remaining reactor hydrogen stream is fed to the First Stage Reactor after being heated in the Hydrogen Heater (F102).

The coal slurry-hydrogen mixture from the Slurry Feed Heater and the hydrogen stream from the Hydrogen Heater are introduced into the bottom of the First Stage Reactor. The reactor operates at approximately 790°F average reactor temperature and 3050 psig. The reactor operating temperature is controlled by adjusting the Slurry Feed heater outlet temperature to achieve the desired conversion level in the reactor.

Effluent from the First Stage Reactor is quenched with cold hydrogen from the recycle hydrogen compressor and introduced into the bottom of the Second Stage Reactor (C106) which is catalytic in nature and, in operation, identical to the base case. The interstage quench hydrogen flow rate is controlled to maintain the Second Stage Reactor in heat balance at 760°F average reactor temperature.

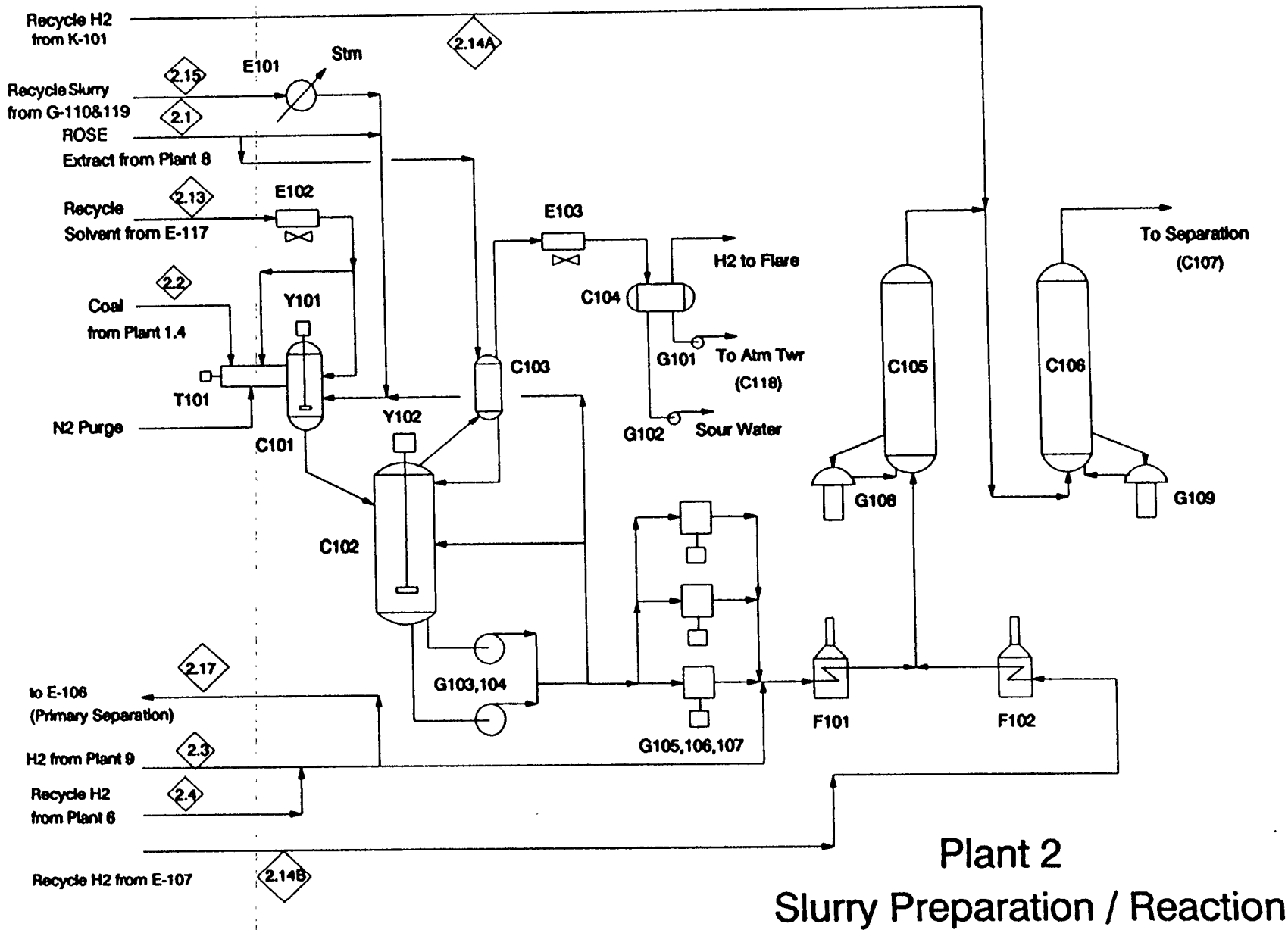

Pr c ss Fl w Diagram f Slurry Pr paration/Reacti n S ction of Liquefaction Plant (Plant 2)

Figure 4.1

The reactors incorporate the principle of the ebullated-bed operation. The entire mass in the reactor is held in a fluidized ebullated state by recirculating coal-oil slurry from the top of the reactor through the Ebullating Pumps (G108 and G109) and back into the bottom of the reactor. The ebullated bed ensures the reactor's near isothermal operation under the extreme exothermic reactions involved. Since the coal particles are much finer than the extrudate catalyst, a separation can be made between these solids such that the coal and ash particles are entrained with the liquid-gaseous reactor effluent products, while the catalyst remains behind in suspension in the reactor.

Primary Separation

As shown on Figure 4.2, the effluent from the top of the Second Stage Reactor is sent directly to the Hot High Pressure Separator (C107) at 760°F and 3000 psig. The overhead vapor, after being separated from the slurry, is cooled to 550°F in exchange with recycle and makeup hydrogen in exchanger E107 and enters the Warm High Pressure Separator (C110). The temperature of the separator is set high enough to prevent precipitation of ammonium salts. The overhead of the warm separator is cooled to 130°F in exchange with recycle and makeup hydrogen in exchanger E106 and in air-fin exchanger E109 before entering the Cold High Pressure Separator (C113). Wash water is injected ahead of the air-fin cooler for control of ammonium salt deposition as the vapor is cooled. The vapor from that separator is compressed in the Recycle Hydrogen Compressor (K101) and returned to the reactors as recycle hydrogen. A portion of the stream is purged from the system to the Hydrogen Purification Unit (Plant 6) to prevent the build-up of methane and other non-condensables in the system. The water phase is withdrawn to the Sour Water Flash Drum (C116) and eventually to Plant 38 for recovery of anhydrous ammonia.

The liquid from the Hot High Pressure Separator is flashed to 100 psig in the Hot Low Pressure Separator (C108). The vapor from the Hot Low Pressure Separator is cooled from 750°F to 450°F in exchange with the Warm Low Pressure Separator liquid (E104) and in an exchanger producing 150 psig steam (E105). The mixed vapor-liquid stream then enters the Warm Low Pressure Separator (C111) along with the liquid from the Warm High Pressure Separator. The temperature of the separator is set high enough to prevent precipitation of ammonium salts. The vapor from the Warm Low Pressure Separator is cooled to 130°F in an air-fin cooler (E110) and enters the Cold Low Pressure Separator (C114) along with the liquid from the Cold High Pressure Separator. Wash water is injected ahead of the air-fin cooler for control of ammonium salt deposition. The vapor from this separator is sent to the Hydrogen Purification Plant, the liquid is sent to the Product Distillation Feed Flash Drum (C117), and the water phase is sent to the Sour Water Flash Drum (C116). The liquid from the Warm Low Pressure Separator is heated by the feed to that vessel in exchanger E104 and sent to the Product Distillation Feed Flash Drum. The liquid from the Hot Low Pressure Separator is further flashed to 20 psig in the Recycle Slurry Hold Drum (C109). The vapor is cooled in air-fin exchanger E108 and sent to the Recycle Slurry Hold Drum Overhead Accumulator. The vapor from this drum is sent to Plant 6, the liquid is sent to the Product Distillation Surge Drum, and the water phase is sent to the

Sour Water Flash Drum. Some of the liquid from the Recycle Slurry Hold Drum is pumped as recycle solvent back, using pump G110 to the coal slurry tank with the remainder being sent to the Product Distillation Surge Drum.

Product Fractionation

As shown in Figure 4.3, the liquid products from the three low pressure separators in the coal liquefaction plant are sent to the Product Distillation Feed Flash Drum (C117) from where the combined stream is pumped through the Atmospheric Feed Heater (F103) to the Atmospheric Distillation Tower (C118). Vapors from the surge drum are vented directly to the atmospheric tower. Two products are taken from the Atmospheric Tower Overhead Accumulator (C120): a naphtha product (IBP - 350°F) which is sent as feed to the Naphtha Hydrotreater via Plant 3, where Naphtha is used as lean oil; and a sour water stream which is sent to the Wash Water Surge Drum (C115) on the Coal Liquefaction Plant. An overhead vapor stream from the overhead accumulator is compressed by Compressor (K102) and sent to Plant 6. A sidestream product (350°F+) is withdrawn from a sidestream stripper (C119) and sent as feed to the Gas Oil Hydrotreater via cold (110°F) intermediate tankage. The bottoms stream off the atmospheric tower is pumped to two dispositions: as recycle solvent back to the Coal Slurry Tank with the remainder being sent to the Vacuum Feed Heater (F104) ahead of the Vacuum Distillation Tower(C122). Three products are taken overhead from the vacuum tower: a light gas oil product (450°F+) which is sent to the Gas Oil Hydrotreater via the same intermediate tankage as the atmospheric sidestream product; an overhead vapor stream which is compressed and sent to Plant 6; and a sour water stream which is sent to the wash water surge drum on the Coal Liquefaction Plant. An upper sidestream product (≈550°F - 850°F) is withdrawn and sent to the Gas Oil Hydrotreater via hot (400°F) intermediate tankage. A lower sidestream product (850°F - 1000°F) is withdrawn from a sidestream stripper (C123) and sent as recycle solvent back to the Coal Slurry Tank. The vacuum tower bottoms stream is sent to the solids-liquids separation unit, Plant 8.

4.3 Material Balance for the Directly Affected Plant

The material balance per train for Plant 2 is shown in Table 4.4 and Figure 4.4.

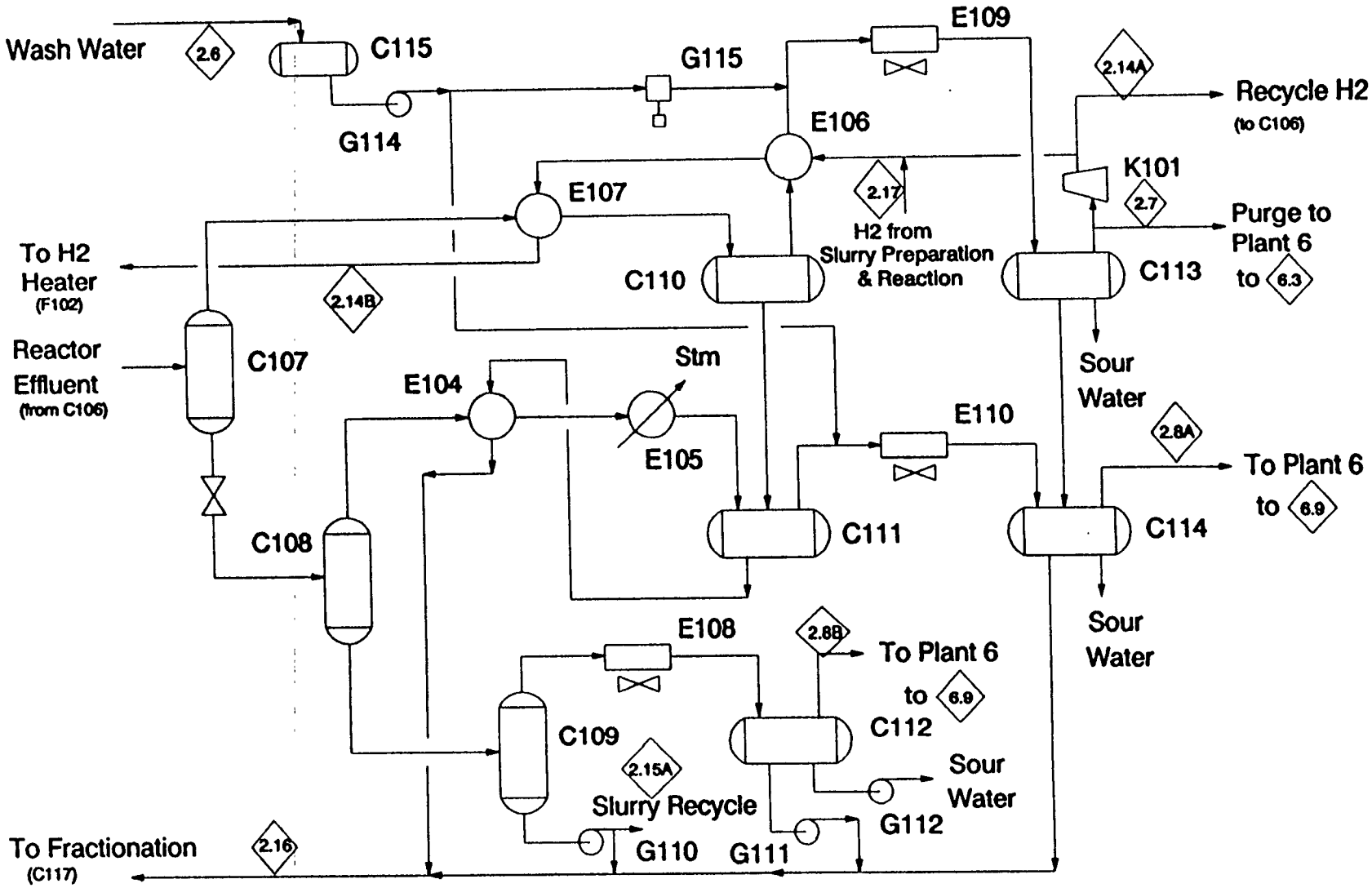

Plant 2

Primary Separation

Process Flow Diagram of Primary Separation Section of Liqu facti n Plant (Plant 2)

Figur 4.2

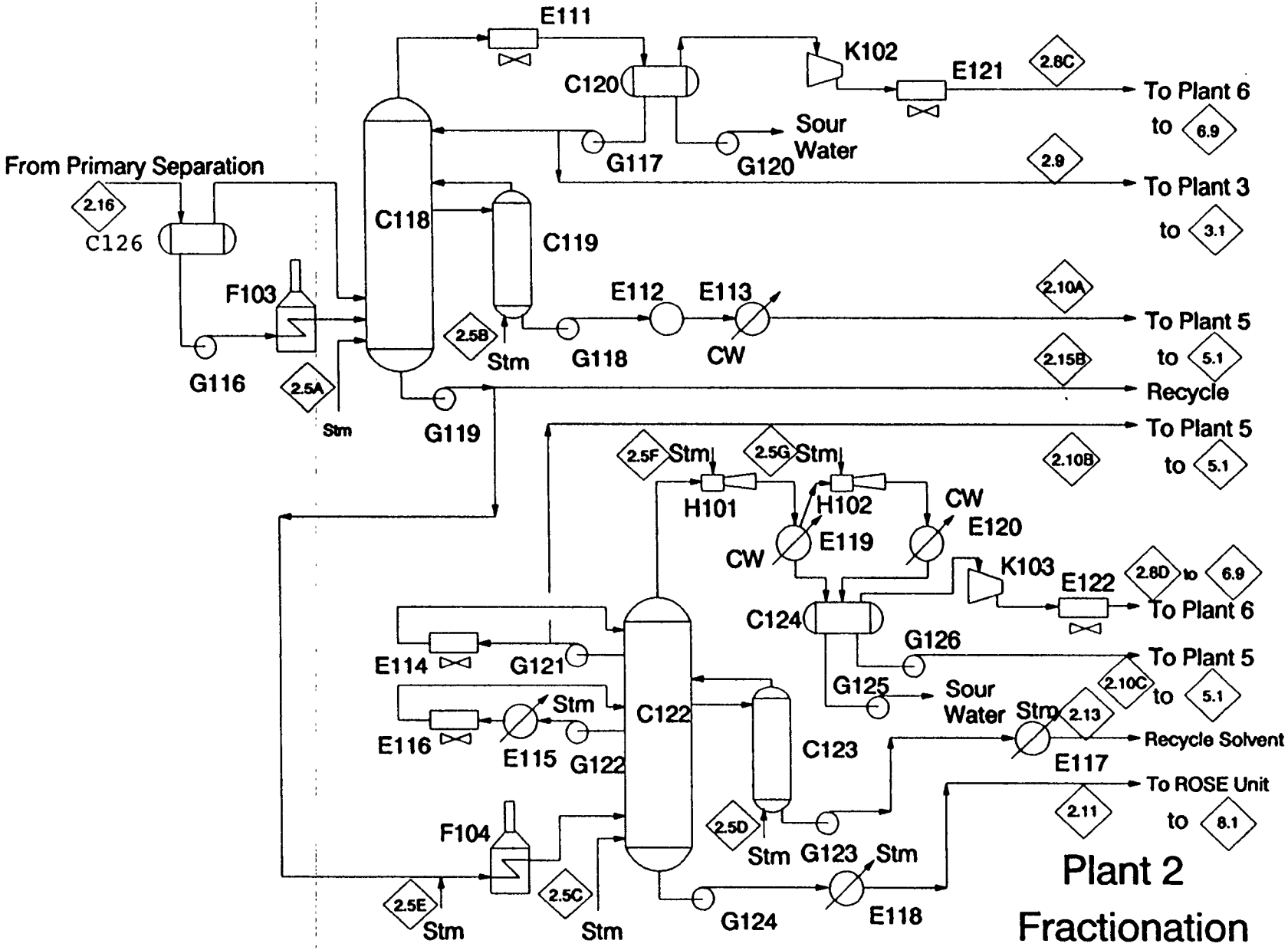

Figur 4.3 Proc ss Flow Diagram of Fractionation S ction of Liquefacti n Plant (Plant 2)

Table 4.4

OVERALL MATERIAL BALANCE PER TRAIN OF COAL LIQUEFACTION PLANT, (PLANT 2)

PLANT INPUT

COMPONENTS	COAL #/hr	MAKEUP H2 #/hr	RECYCLE H2 FR #6 #/hr	WASH WATER #/hr	STEAM #/hr	ROSE EXTRACT #/hr	TOTAL INPUT #/hr	RXN DELTA #/hr
N2		159	42				201	
H2		11357	2918				14275	-11175
H2O	4155		82	157092	35316		196645	17141
H2S			1				1	6020
NH3			0				0	2938
CO			30				30	126
CO2			0				0	288
C1			1172				1172	4848
C2			609				609	3767
C3			466				466	4001
C4			156				156	1424
C5-350			89				89	22548
350-450			1				1	11373
450-650			0				0	38481
650-850			0			84	84	32335
850-1000			0			390	390	9012
1000+			0			118591	118591	23575
PHENOLS			0				0	541
MEA			1				1	
UNCONVERTED COAL	180238		0				180238	-167243
ASH	23359		0				23359	
TOTAL	207752	11516	5567	157092	35316	119065	536308	-0

PLANT OUTPUT

Stream No.	2.7	2.8	2.9	2.10	2.16	2.11	2.12	
COMPONENTS	PURGE H2 #/hr	PURGE GASES #/hr	NAPHTHA #/hr	GAS OIL #/hr	850-1000 #/hr	ROSE UNIT FEED #/hr	SOUR WATER #/hr	TOTAL OUTPUT #/hr
N2	141	60						201
H2	2316	784						3100
H2O	300	967	269				212249	213785
H2S	1698	1699	13				2611	6021
NH3	407	34					2497	2938
CO	109	47						156
CO2	197	20					71	288
C1	3515	2504	1				1	6021
C2	1750	2611	15					4376
C3	1192	3189	87					4468
C4	103	1287	190					1580
C5-350	47	2898	18973	657			63	22638
350-450	0	375	350	8928			1721	11374
450-650				38479			1	38480
650-850				32227	108	84		32419
850-1000					7171	2231		9402
1000+					143	142023		142166
PHENOLS							541	541
MEA		0						0
UNCONVERTED COAL						12995		12995
ASH						23359		23359
TOTAL	11775	16475	19898	80291	7422	180692	219755	536308

FIGURE 4.4

OVERALL MATERIAL BALANCE PER TRAIN OF COAL LIQUEFACTION PLANT (PLANT 2)

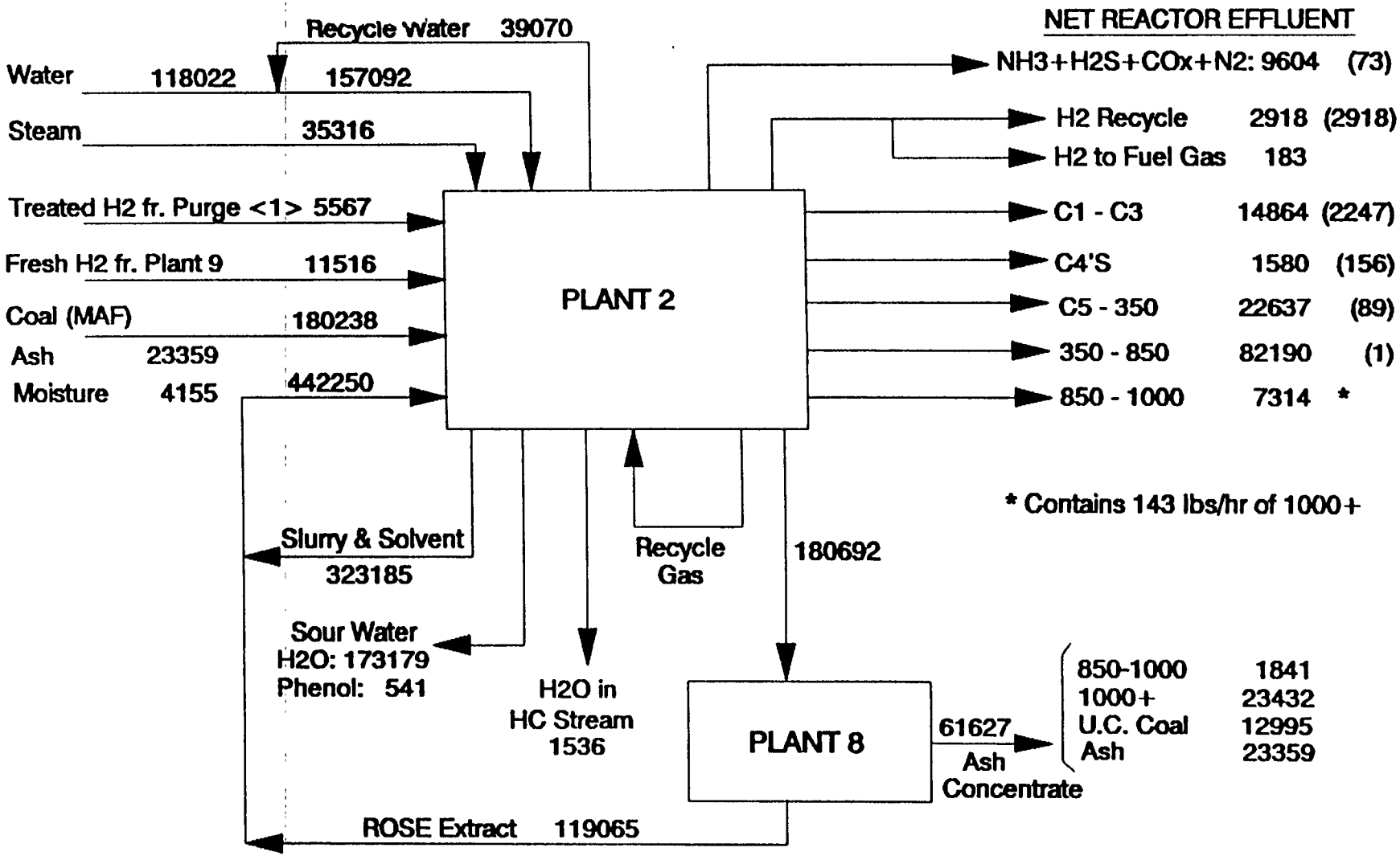

NOTES: . Flow rate in lbs/hr

. Numbers in parenthesis in Net Reaction Effluent streams are due to treated H2 input from Purge stream <1>. Th refore, to calculate the % yield subtract ut th corresponding number in parenthesis.

. The HC's in sour water are shown in net reactor effluent.

. Ther are seven trains of Liquefaction Reactors.

4.4 Utility Summary for the Directly Affected Plant

The utility requirement for the directly affected plant, Plant 2, is shown in Table 4.5.

TABLE 4.5

UTILITY REQUIREMENT FOR PLANT 2 (7 TRAINS)

Steam	
600 psig superheated, lbs/hr	6,408
600 psig saturated, lbs/hr	-171,668
150 psig saturated, lbs/hr	-103,739
50 psig saturated, lbs/hr	64,613
Cooling water, gpm	9,321
Electricity, KW	67,921
Fuel Gas, MMBtu/hr	1,255
Nitrogen, SCFM	823

4.5 Overall Impact

The overall impact on the entire complex due to the inclusion of Plant 2.3-01, Thermal-Catalytic Reactor (thermal being the first stage and catalytic being the second stage, instead of having both stages catalytic, which is the case in base line design) has been quantified based on the throughput adjustments to all the indirectly affected plants. Such effects are included in this report in terms of overall plant configuration and overall material balance (sub-section 4.5.2), overall water flow distribution (sub-section 4.5.3), and overall hydrogen flow distribution (sub-section 4.5.4).

4.5.1 Overall Plant Configuration and Overall Material Balance

The overall plant configuration and overall material balance for this option are shown in the same figure, Figure 4.5.

4.5.2 Overall Utility Summary

The overall utility summary for this option is shown in Table 4.6.

4.5.3 Overall Water Flow Distribution

The overall water flow distribution for this entire complex is shown in Figure 4.6.

4.5.4 Overall Hydrogen Flow Distribution

The overall hydrogen flow distribution for the entire complex is shown in Figure 4.7.

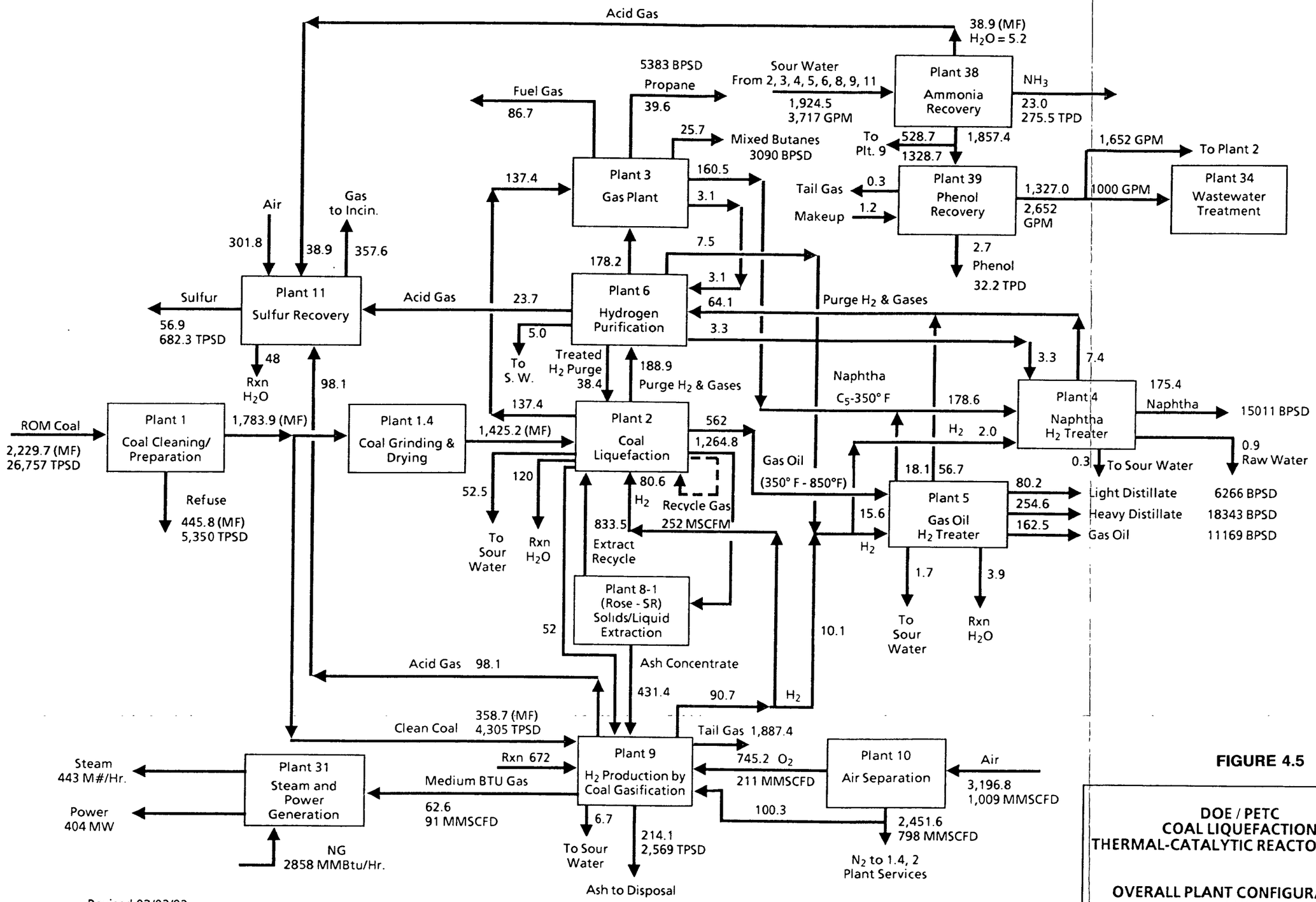

Revised 02/03/93

0891016-6

Notes:

1. Flow rates are in MLB/HR unless noted and on dry basis.
2. Flow rates around plants #38, 39, 34 are shown on wet basis.

FIGURE 4.5

DOE / PETC
COAL LIQUEFACTION
THERMAL-CATALYTIC REACTOR OPTION

OVERALL PLANT CONFIGURATION
AND
OVERALL MATERIAL BALANCE

TABLE 4.6

OVERALL UTILITY BALANCE

COAL LIQUEFACTION THERMAL CATALYTIC OPTION

Plant No.	PLANT NAME	Fuel Gas MMbtu/hr	Electric Power KW	Steam Psig, Lb/hr 600 Sup @720 F	600 @489 F	150 @366 F	50 @298 F	Cond/BFW Net Cons lb/hr	Cooling Water gpm	Sour Water gpm	Waste Water gpm	Makeup Water gpm	Air scfm	Nitrogen scfm
	PROCESSING UNITS													
1	Coal Cleaning and Handling		7,638								723			
1.4	Coal Griding and Drying	486	12,114						240				5,956	75,063
2	Coal Liquefaction	1,255	67,921	6,408	(171,668)	(103,739)	64,613	489,034	9,321	(2,424)				823
3	Gas Plant	(1,837)	849		368,649		15,974	(384,623)	20,407	(5)				
4	Naphtha Hydrotreater	58	840		20,845			(20,845)	2,008	(32)		(30)		
5	Gas Oil Hydrotreater	136	1,825		54,484	(28,364)		(21,932)	6,892	(74)		(62)		
6	Hydrogen Purification		44,017				69,374	(69,374)	7,050	(70)		(60)		
8	Critical Solvent Deashing	328	6,752			39,336				(79)				
9	H2 Production by Coal Gasification	(962)	62,009		286,256	(748,405)	(766,455)	1,801,116	51,601	(920)	95	(1,172)		23,162
10	Air Separation		159,647											(553,993)
11	By-product Sulfur Recovery	64	2,822		55,249	(171,898)	50,192	66,457	7,488	(114)				
ALL	Common Users			73000		40000	90000	(193,000)				(532)	9044	
	Sub Total (Process)	(472)	366,434	79,408	41,303	(973,070)	(476,302)	1,666,833	105,007	(3,718)	818	(1,856)	15,000	(454,945)
	OFFSITES													
19	Relief and Blowdown		19											
20	Tankage		6,758			22,000	3,300	(25,300)	100					
30	Electrical Distribution													
31	Steam and Power Generation	3,820	(404,264)	(443,046)		353,997	409,211	(658,334)	64,270		(316)	(992)		
32	Raw, Cooling and Potable Water Systems		13,343						(249,737)		(996)	11,891		
33	Fire Protection		44											
34	Sewage & Effluent Treatment		7,313				3,000	(3,000)				(996)		
35	Instrument & Plant Air Systems		2,894										(15,000)	
36	Purge and Flush Oil System		258											
37	Solid Waste Disposal		48								90			
38	Ammonia Recovery		1,514		322,335	574,643		(896,978)	75,945	3,717				
39	Phenol Recovery		804			22,430	60,791	(83,221)	4,415		(1,000)			
Other	Bldg 41,42, Light, Etc.		4835											
	Natural Gas Imported	(3,510)												
	Off Site BL and Evaporation										1,404	(8,047)		
	Sub Total (Offsite)	310	(366,434)	(443,046)	322,335	973,070	476,302	(1,666,833)	(105,007)	3,717	(818)	1,856	(15,000)	0
	GRAND TOTAL	(162)	0	(363,638)	363,638	0	0	0	0	(1)	0	0	0	(454,945)

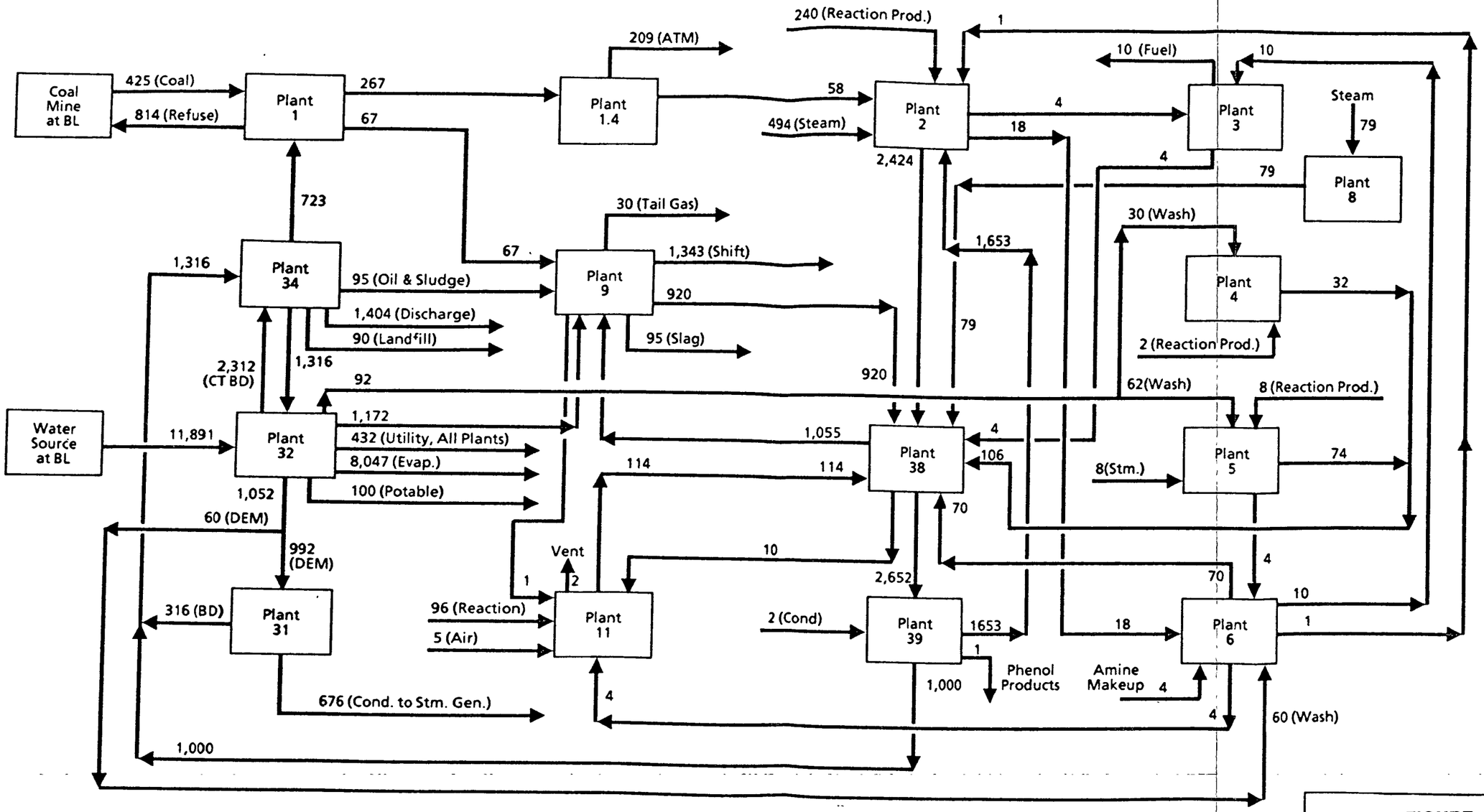

Notes:

1. Flows are for normal operation and in GPM

FIGURE 4.6

DOE / PETC COAL LIQUEFACTION

THERMAL CATALYTIC OPTION

OVERALL WATER FLOW DISTRIBUTION

1091056-1

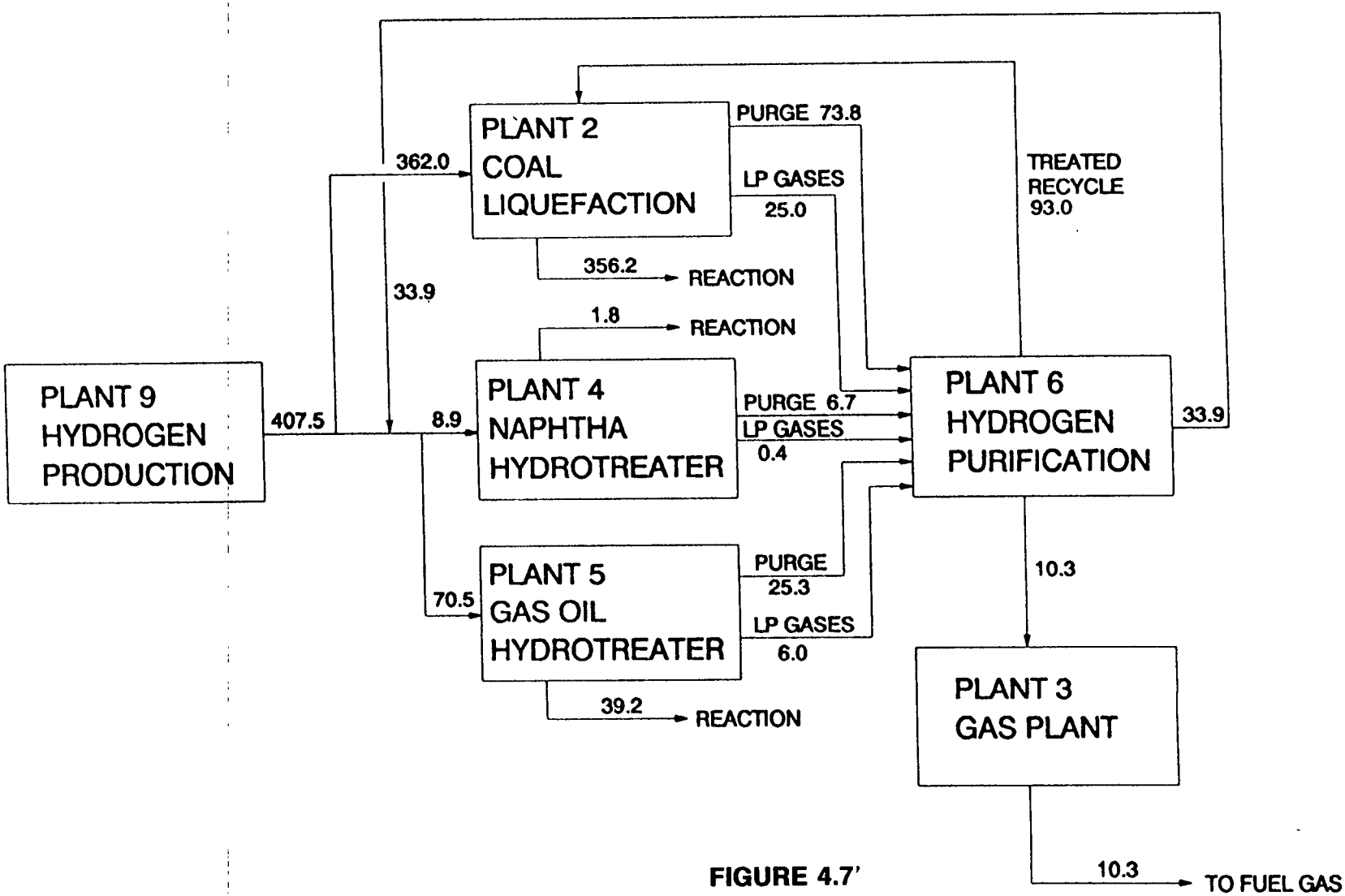

FIGURE 4.7'

NOTES:
Hydrogen flow rates are in MMSCFD (Pure H2)

OVERALL HYDROGEN FLOW DISTRIBUTION
THERMAL CATALYTIC OPTION

H2_FLOW2.DRW 8/5/91

5. OPTION 4

5. Opti n 4 (Catalytic-Catalytic Liquefaction R actor Configuration with V nt Gas Separation Option)

5.1 Design Basis, Criteria and Considerations

In this option, as discussed earlier, the reactor configuration is changed from the base case configuration (catalytic-catalytic) to catalytic reactor for both the stages with inter stage vent gas separation. The design basis is same as the base case.

5.2 Process Description/Process Flow Diagram for the Directly Affected Plant

Figure 5.1 is a process flow diagram for this option. The objective of adding interstage separation between the two reactors is to remove the light ends formed in the hydrocracking reactions in the first stage reactor and thereby to reduce the vapor loading in the second stage reactor.

This option differs from the base case by the addition of a vapor-slurry separator (C-127) between the two reactors C-105 and C-106. The effluent from the first stage reactor goes through C-127 where the vapor and slurry streams are separated out.

Discussions:

For the cases where the capacity per reactor train is limited by the vapor loading in the second stage, the option of adding interstage separation could potentially reduce the total number of reactor trains. However, for the base line case, the capacity of the reactor trains is limited by the total reactor weight, such that the addition of interstage separation has no impact on the number of reactor trains needed. Due to the reduction of gas flow by the inclusion of interstage separation, the second stage reactor diameter can be directionally reduced (for a fixed space velocity). This reduction could have reduced the number of trains of second reactor. However, because the number of trains for the first reactor is fixed, this approach does not allow any practical solution.

Use of interstage separation may be beneficial with a different design basis. Two of such cases are : 1) higher temperature or more active catalyst and 2) low/high temperature reactor staging.

In the first case, there will be smaller catalyst volume for a fixed level of coal conversion which will result in a higher space velocity. This will ultimately reduce the first stage reactor weight and therefore will not be limited by maximum weight of the reactor. In this scenario reduction of vapor loading in the second reactor could potentially reduce the total number of trains for reactors.

In the second case (low/high temperature staging), it may be possible to utilize the exothermic heat of reaction to maintain the heat balance in the second-stage reactor. In this case the hydrogen requirement to the second-stage would no longer be set by heat balance considerations. The hydrogen requirement would be set by the desired hydrogen partial pressure in the reactor. This would result in lower hydrogen requirement in the second-stage of a two-stage system, and a potentially attractive option for interstage separation.

In addition, this approach may also allow split flow of make-up hydrogen to the second reactor.

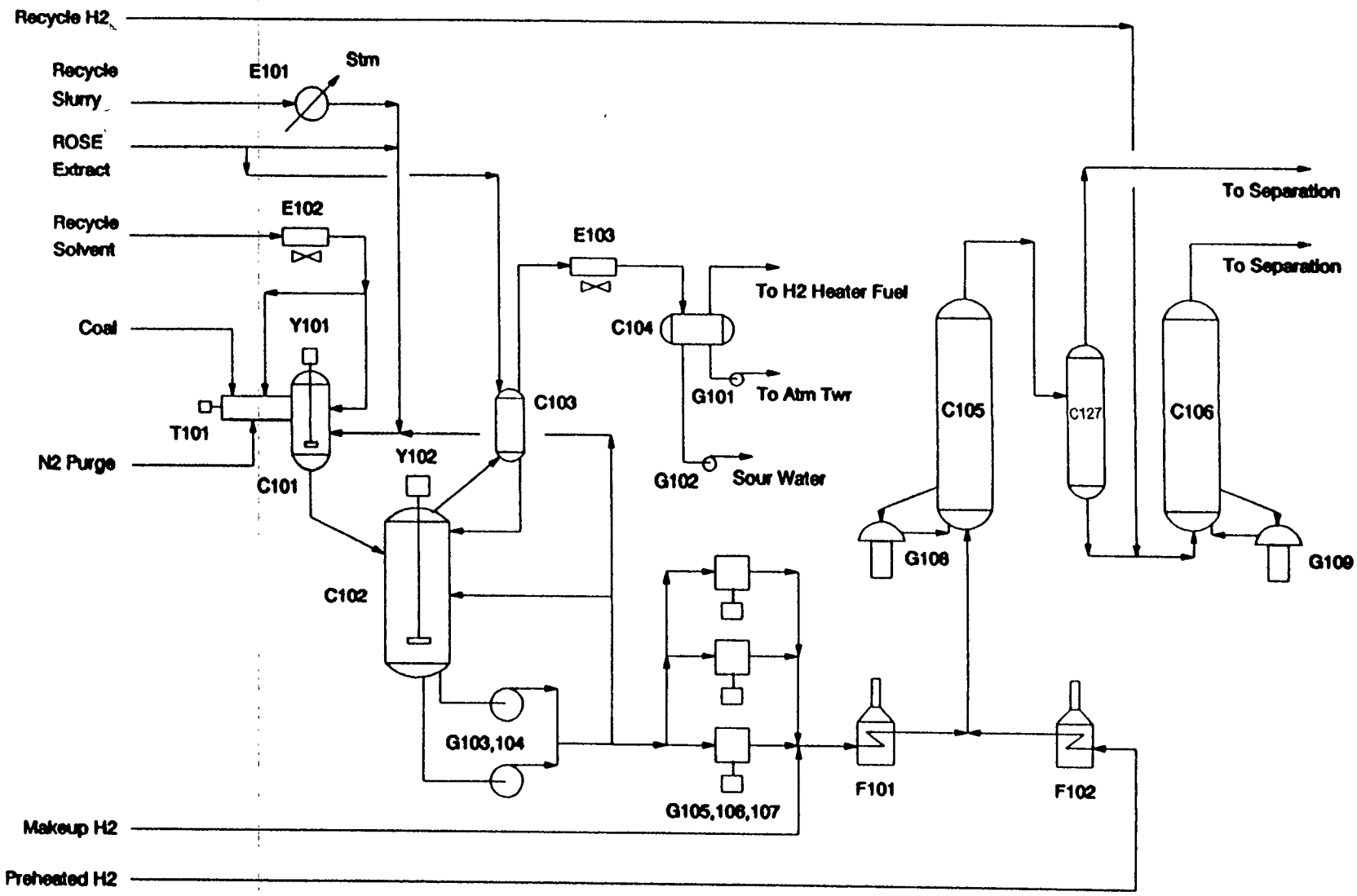

FIGURE 5.1 **PROCESS FLOW DIAGRAM OF SLURRY PREPARATION/REACTION SECTION OF COAL LIQUEFACTION PLANT (PLANT 2)**

5.3 Material Balanc for the Directly Affected Plant

The material balance per train for Plant 2 is shown Table 5.1 and Figure 5.2.

TABLE 5.1

OVERALL MATERIAL BALANCE PER TRAIN OF COAL LIQUEFACTION PLANT (PLANT 2)

PLANT INPUT

STREAM NO.	2.2	2.3	2.4	2.6	2.5	2.1		
COMPONENTS	COAL #/hr	MAKEUP H2 #/hr	RECYCLE H2 FR #6 #/hr	WASH WATER #/hr	STEAM #/hr	ROSE EXTRACT #/hr	RXN DELTA #/hr	TOTAL INPUT #/hr
N2		223	70					293
H2		15900	4086				-15645	4341
H2O	5817		102	165232	49442		23997	244589
H2S			2				7217	7218
NH3			0				3507	3507
CO			42				151	193
CO2			0				353	353
C1			1501				4643	6144
C2			862				3608	4470
C3			668				3835	4503
C4			291				1993	2284
C5-350			171				40676	40847
350-450			1				18950	18952
450-650			0				63361	63361
650-850			0			76	53898	53974
850-1000			0			353	1665	2018
1000+			0			107317	21171	128488
PHENOLS			0				757	757
MEA			1					1
UNCONVERTED COAL	252333		0				-234140	18193
ASH	32702		0					32702
TOTAL	290852	16123	7794	165232	49442	107746	0	637189

PLANT OUTPUT

STREAM NO.	2.7	2.8	2.9	2.10	2.11	2.12	
COMPONENTS	PURGE H2 #/hr	PURGE GASES #/hr	NAPHTHA #/hr	GAS OIL #/hr	ROSE UNIT FEED #/hr	SOUR WATER #/hr	TOTAL OUTPUT #/hr
N2	205	88					293
H2	3442	899					4341
H2O	307	967	486			242829	244589
H2S	2022	2042	23			3131	7218
NH3	483	40				2984	3507
CO	135	58					193
CO2	173	80				100	353
C1	3623	2518	2			1	6144
C2	2007	2436	27				4470
C3	1315	3032	156				4503
C4	161	1781	342				2284
C5-350	85	5349	34227	1098		88	40847
350-450	0	54	631	15858		2409	18952
450-650		5		63354		2	63361
650-850				53898	76		53974
850-1000					2019		2019
1000+					128488		128488
PHENOLS						757	757
MEA		1					1
UNCONVERTED COAL					18193		18193
ASH					32702		32702
TOTAL	13958	19350	35894	134208	181478	252301	637189

INTERSTAGE VENT GAS SEPARATION OPTION

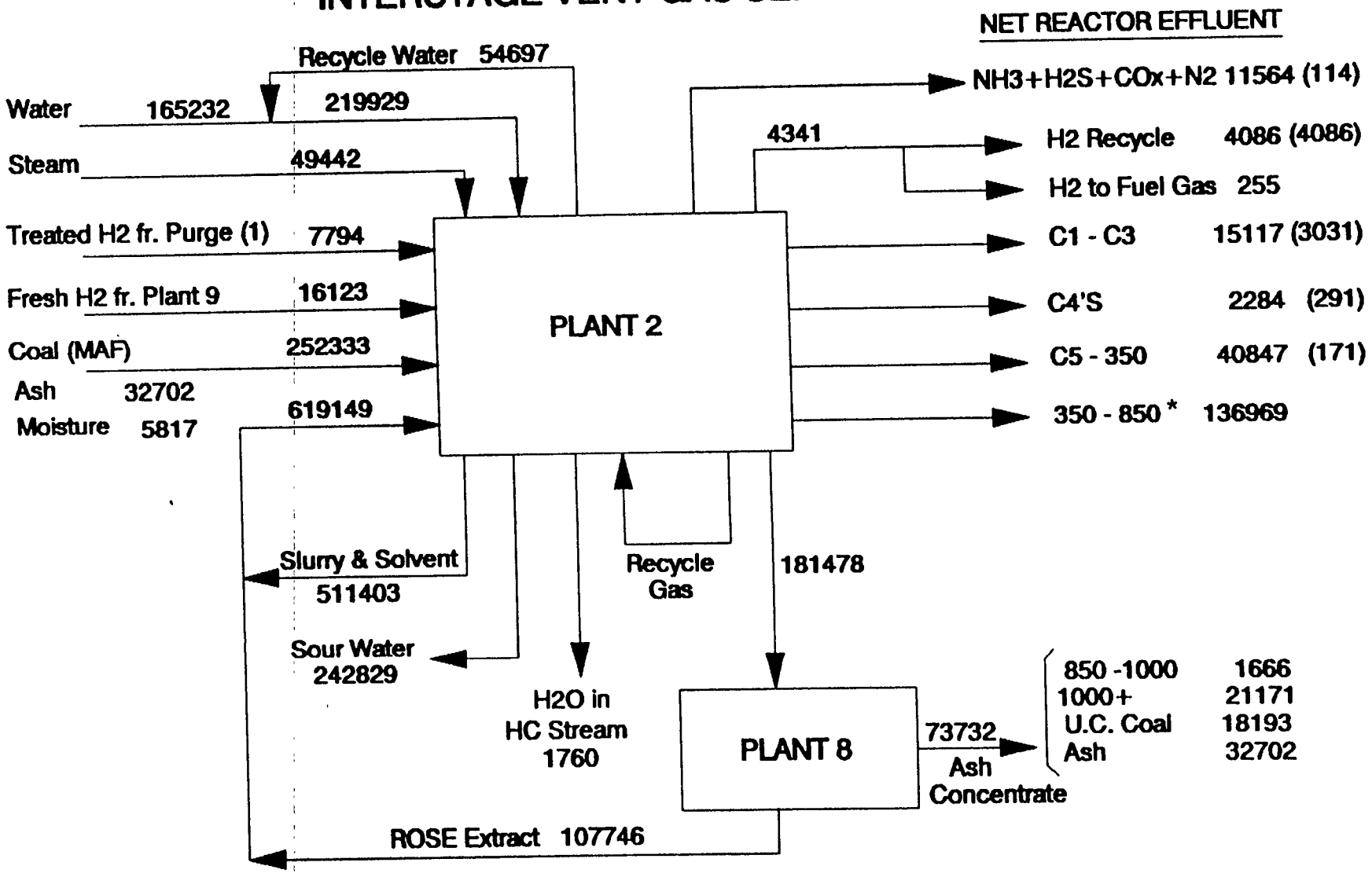

NOTES: . Flow rate in lbs/hr
. Number in parenthesis is due to input str am (1). Therefore, to calculate the % yield subtract ut th corresponding number in parenthesis.
. Th HC's in sour water are shown in net r actor efflu nt.
* 350-850 fraction includes phenols

FIGURE 5.2: OVERALL MATERIAL BALANCE PER TRAIN OF COAL LIQUEFACTION PLANT (PLANT 2)

5.4 Utility Summary for the Directly Affected Plant

The utility requirement for the directly affected plant, Plant 2, is shown in Table 5.2.

TABLE 5.2

UTILITY REQUIREMENT FOR PLANT 2 (5 TRAINS)

Steam	
600 psig superheated, lbs/hr	5,565
600 psig saturated, lbs/hr	-149,090
150 psig saturated, lbs/hr	-90,095
50 psig saturated, lbs/hr	56,115
Cooling water, gpm	8,095
Electricity, KW	59,621
Fuel Gas, MMBtu/hr	1,066
Nitrogen, SCFM	715

5.5 Overall Impact

The overall impact on the entire complex due to the inclusion of Plant 2.3-02 (Catalytic-Catalytic liquefaction reactor with vent gas separation) instead of having both stages catalytic (which is the case in base line design) has been quantified based on the throughput adjustments to all the indirectly affected plants. Such effects are included in this report in terms of overall plant configuration and overall material balance (sub-section 5.5.1), overall utility summary (subsection 5.5.2), overall water flow distribution (sub-section 5.5.3), and overall hydrogen flow distribution (sub-section 5.5.4).

5.5.1 Overall Plant Configuration and Overall Material Balance

The overall plant configuration and overall material balance for this option are shown in the same figure, Figure 5.3.

5.5.2 Overall Utility Summary

The overall utility summary for this option is shown in Table 5.3.

5.5.3 Overall Water Flow Distribution

The overall water flow distribution for this entire complex is shown in Figure 5.4.

5.5.4 Overall Hydrogen Flow Distribution

The overall hydrogen flow distribution for the entire complex is shown in Figure 5.5.

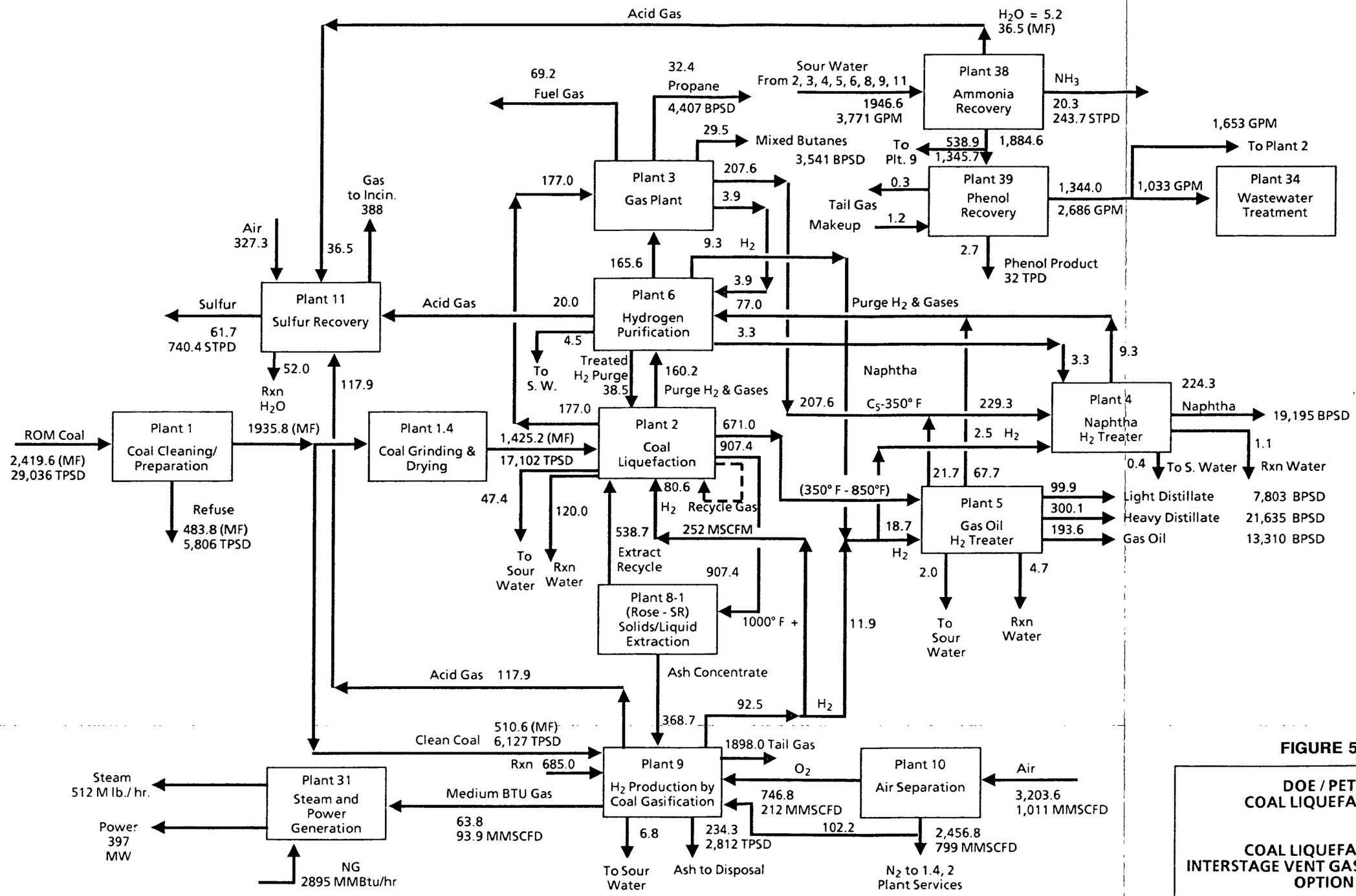

Notes:

1. Flow rates are in MLB/HR unless noted and on dry basis
2. Minor streams including steam, water, sour water, and make-up amine are not shown on this diagram
3. Flow rates around plants #38, 39, 34 are shown on wet basis

1091056-1

FIGURE 5.3

DOE / PETC
COAL LIQUEFACTION

COAL LIQUEFACTION
INTERSTAGE VENT GAS SEPARATION
OPTION

OVERALL PLANT CONFIGURATION
AND
OVERALL MATERIAL BALANCE

TABLE 5.3

OVERALL UTILITY SUMMARY

11-Dec-91

COAL LIQUEFACTION – INTERSTAGE VENT GAS SEPARATION OPTION

Plant No.	PLANT NAME	Fuel Gas MMbtu/hr	Electric Power KW	Steam Psig, Lb/hr 600 Sup @720 F	600 @489 F	150 @366 F	50 @298 F	Cond/BFW Net Cons lb/hr	Cooling Water gpm	Sour Water gpm	Waste Water gpm	Makeup Water gpm	Air scfm	Nitrogen scfm
	PROCESSING UNITS													
1	Coal Cleaning and Handling		8,289								785			
1.4	Coal Griding and Drying	486	12,114						240				5,956	75,063
2	Coal Liquefaction	1,066	59,621	5,565	(149,090)	(90,095)	56,115	424,715	8,095	(2,428)				715
3	Gas Plant	(1,473)	913		396,610		17,186	(413,796)	21,955	(5)				
4	Naphtha Hydrotreater	74	1,073		26,622			(26,622)	2,564	(40)		(38)		
5	Gas Oil Hydrotreater	162	2,179		65,048	(33,864)		(26,184)	8,228	(88)		(73)		
6	Hydrogen Purification		43,944				59,473	(59,473)	6,662	(70)		(60)		
8	Critical Solvent Deashing	212	4,363			25,419				(51)				
9	H2 Production by Coal Gasification	(981)	63,210		(291,800)	(762,900)	(781,300)	1,836,000	52,600	(966)	95	(1,196)		23,611
10	Air Seperation		159,994											(555,197)
11	By-product Sulfur Recovery	69	3,062		59,956	(186,541)	54,468	72,117	8,126	(123)				
ALL	Common Users			73000		40000	90000	(193,000)				(532)	9044	
	Sub Total (Process)	(385)	358,762	78,565	107,346	(1,007,981)	(504,058)	1,613,757	108,470	(3,771)	880	(1,899)	15,000	(455,808)
	OFFSITES													
19	Relief and Blowdown		19											
20	Tankage		6,758			22,000	3,300	(25,300)	100					
30	Electrical Distribution													
31	Steam and Power Generation	3,876	(396,928)	(511,963)		381,996	436,191	(593,853)	65,667		(322)	(898)		
32	Raw, Cooling and Potable Water Systems		13,652						(255,529)		(1,011)	12,042		
33	Fire Protection		44											
34	Sewage & Effluent Treatment		7,313				3,000	(3,000)				(1,011)		
35	Instrument & Plant Air Systems		2,894										(15,000)	
36	Purge and Flish Oil System		258											
37	Solid Waste Disposal		48								90			
38	Ammonia Recovery		1,531		326,052	581,269		(907,321)	76,821	3,771				
39	Phenol Recovery		814			22,716	61,567	(84,283)	4,471		(1,033)			
Other	Bldg 41,42, Light, Etc.		4835											
	Natural Gas Imported	(3,491)												
	Off Site BL and Evapration										1,396	(8,234)		
	Sub Total (Offsite)	385	(358,762)	(511,963)	326,052	1,007,981	504,058	(1,613,757)	(108,470)	3,771	(880)	1,899	(15,000)	0
	GRAND TOTAL	0	0	(433,398)	433,398	0	0	0	0	0	0	0	0	(455,808)

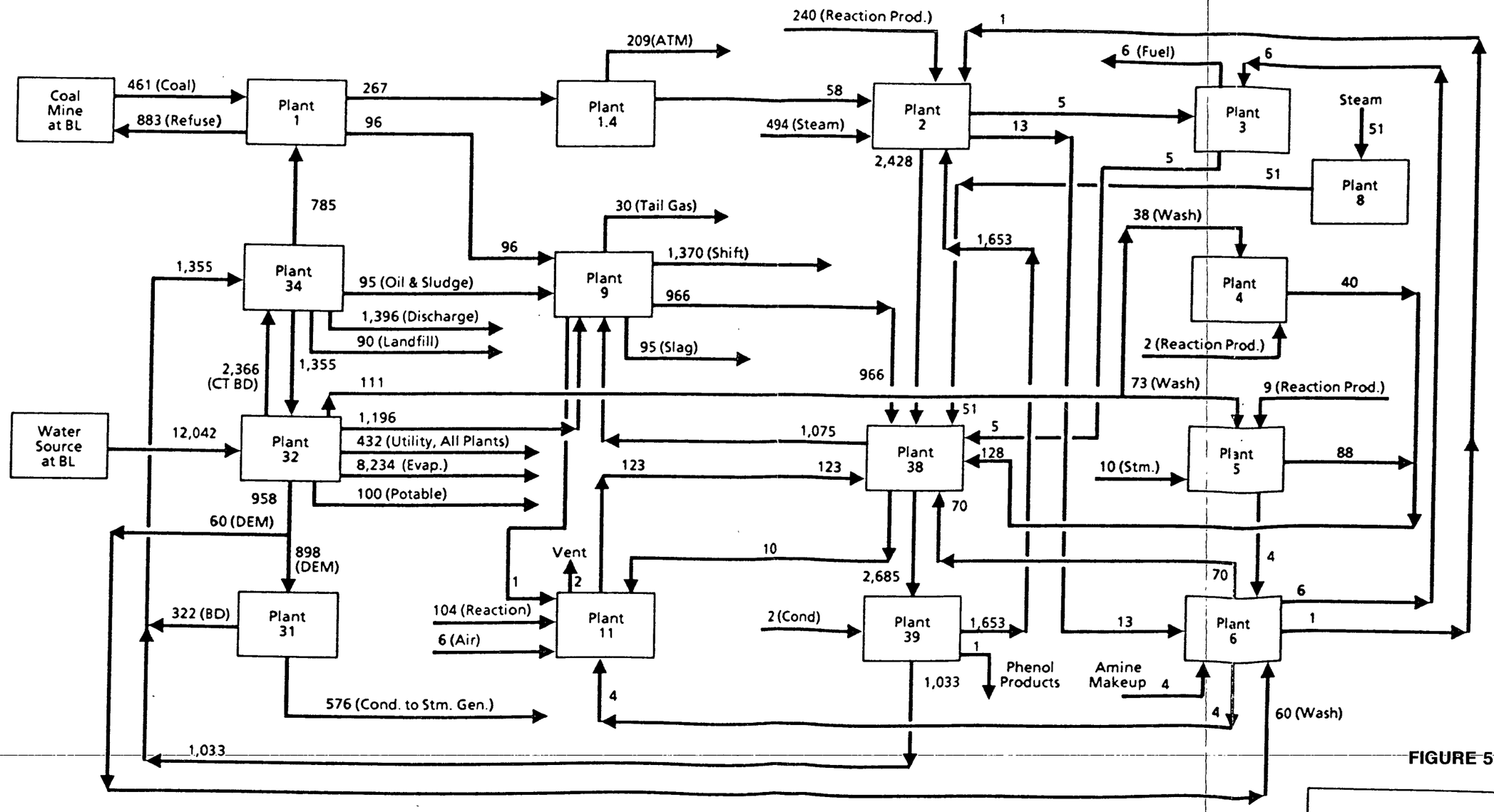

FIGURE 5.4

Notes:

1. Flows are for normal operation and in GPM

DOE / PETC
COAL LIQUEFACTION

INTERSTAGE VENT GAS SEPARATION OPTION

OVERALL WATER FLOW DISTRIBUTION

1091056-1

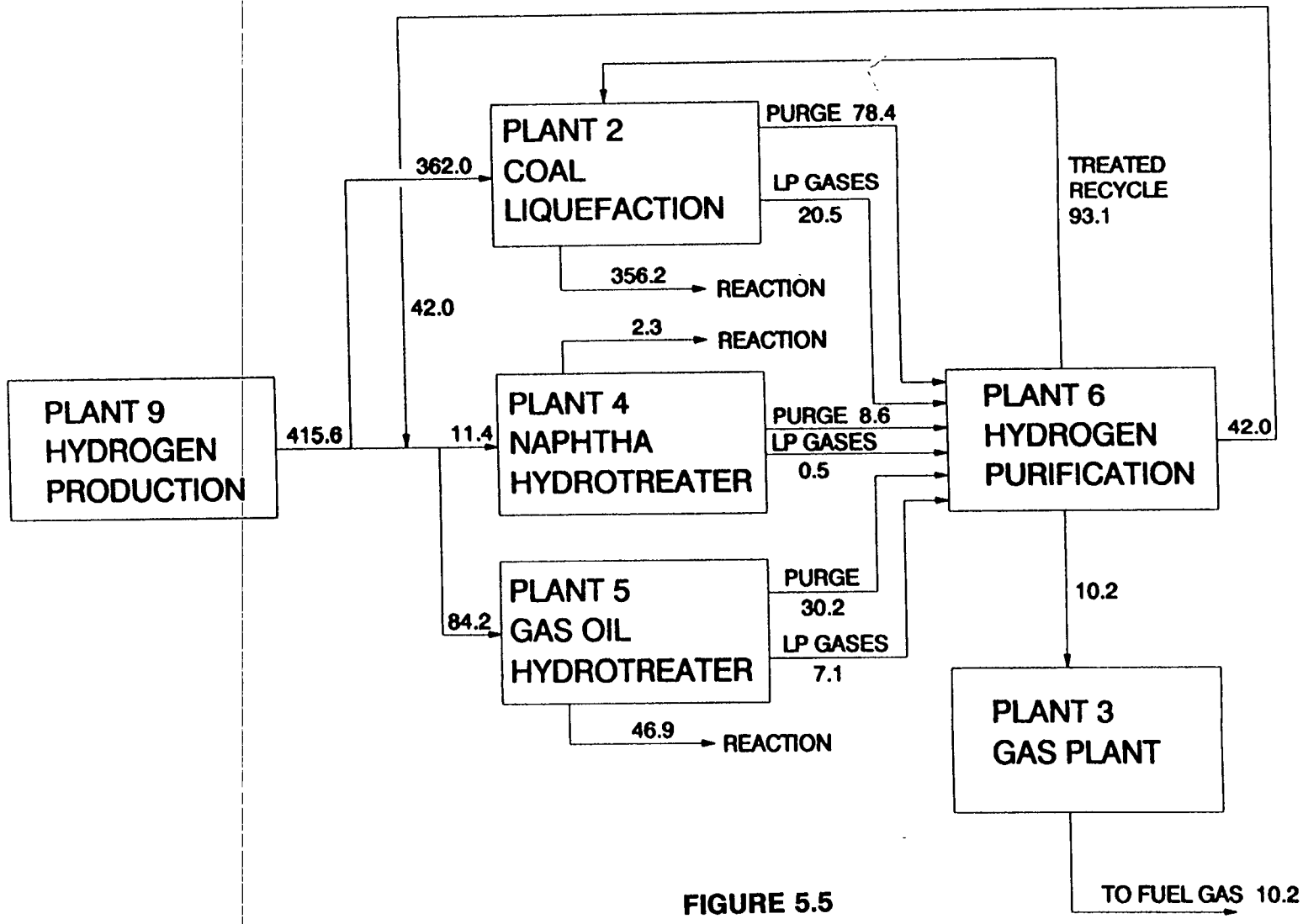

FIGURE 5.5

NOTES:
Hydrogen flow rates are in MMSCFD (Pure H2)

OVERALL HYDROGEN FLOW DISTRIBUTION

INTERSTAGE VENT GAS SEPARATION OPTION

H2_FLOW1.DRW 7/24/91

6. OPTION 5

6. Option 5 (Fluid Coking of Vacuum Bottoms)

6.1 Design Basis, Criteria and Considerations

In this option, as discussed earlier, the vacuum bottoms processing step is changed from critical solvent extraction (Kerr McGee's ROSE-SR) to FLUID COKING (Exxon's Technology).

The directly affected plant in this case is the Kerr McGee's ROSE-SR plant (Plant 8) which is replaced with FLUID COKING plant (Plant 8-02). Indirectly affected plants are all other process plants in the complex.

The liquefaction reactor yield data were generated with the help of SEI at Wilsonville, Alabama and Amoco at Naperville, Chicago. The yield data as shown in Table 6.1 is utilized as the design basis for material balance for coal liquefaction plant (Plant 2).

In developing this option several key assumptions were made. These assumptions are:

> Gas oil fraction from vacuum tower is recycled to maintain same solvent to MAF coal ratio as the base case.
>
> Coker liquid is fractionated and mixed with the respective Plant 2 products for hydrotreating purpose. However, the percentages of these additions are being very small (naphtha 2 wt% and gas oil 4 wt%) no changes in operating conditions of the naphtha and gas oil hydrotreaters are considered.
>
> Hydrotreater yields for both naphtha and gas oil are same as they are in the base case.

As a result, the throughput capacities for Plant 4 (naphtha hydrotreater) and Plant 5 (gas oil hydrotreater) are changed to 78% and 79% respectively.

The overall material balance for coal liquefaction plant (Plant 2) and Coker plant (Plant 8-02) are shown in Figure 6.2 and Table 6.2, respectively. The overall material balance for the entire complex is shown in Figure 6.3 which accounts for all the necessary throughput adjustments to all the indirectly affected plants.

TABLE 6.1

FLUID COKING OPTION

COAL LIQUEFACTION YIELD

Yields wt% MAF Coal Feed

	Overall
H_2S	2.44
H_2O	8.3
NH_3	1.19
CO	0.05
CO_2	0.12
C1	1.61
C2	1.25
C3	1.34
C4	0.60
C5-350F	12.40
350-450F	5.72
450-850F	35.87
850-1000F	
1000F+	26.40
Unconverted Coal	7.21
Phenols	0.30
Ash	12.96
H2 Consumption	- 4.80

6.2 Process Description/Process Flow Diagram for the Directly Affected Plant

The Fluid Coking Plant consists of two sections, viz (1) Reaction Section and 2) Fractionation Section. The process flow diagram for the Fluid Coking Plant is shown in Figure 6.1.

Reaction Section

The vacuum bottoms from Plant 2 is mixed with the recycle slurry from the fractionator bottoms and introduced to the reactor (C101). There the feed is thermally cracked into lighter liquids, gases, and solid coke. The lighter products leave the reactor through a cyclone into a scrubber section of the reactor vessel where fine coke particles are scrubbed from the vapor product by the recycle stream from the fractionator. The recycle slurry stream is reintroduced to the reactor with the incoming fresh feed.

The reaction products leave the top of the scrubber and go to product fractionation. The coke produced in the reactor is deposited on the fluid coke particles and moves down the reactor through a stripping zone and exits to a transfer line and is moved to the heater vessel (C102).

Both the reactor vessel and heater vessel contain fluidized beds with coke particles circulating between the two vessels by fluidized solids techniques. In the heater vessel, sufficient coke is burned to supply the heat of reaction needed in the reactor to sustain the thermal cracking process. The air for combustion is provided by an air blower, and enters the heater at the bottom with superheated steam. The hot coke leaves the heater and returns to the reactor through the hot coke transfer line.

The net product coke leaves the heater vessel through a quench drum (C104). The product coke is then transported to a coke storage silo (C107) and is further transported by conveyor to Plant 9.

The low Btu gas exits the heater through internally mounted cyclones and leaves the top of the heater. It then flows through a steam generator (E101) and a venturi scrubber (Y101) where the remaining small coke fines are removed. Prior to being transported to Plant 31 for use in power generation, the low Btu gas is treated with an amine specific for removing hydrogen sulfide.

Fractionation Section

The reaction products from the reactor/scrubber are charged to the base of the fractionator (C105), and are quenched by the bottoms pumparound circuit thus condensing a portion of the heavy ends which are recycled back to the top of the scrubber. A pumparound system is installed at the gas oil draw tray to minimize entrainment of heavy oil into the gas oil product. The gas oil product is sent to Plant 5 for hydrotreating.

The overhead condenser condenses the heavier fraction of the vapors that pass out of the top of the fractionator. Some of this condensate is returned to the top of the tower as reflux, and the remainder is unstabilized naphtha which is sent to Plant 4 for hydrotreating.

The coker gas from the overhead drum is compressed, treated with an amine specific for removing hydrogen sulfide, and sent directly to the fuel gas system. Amine regeneration facilities are located on the coker site.

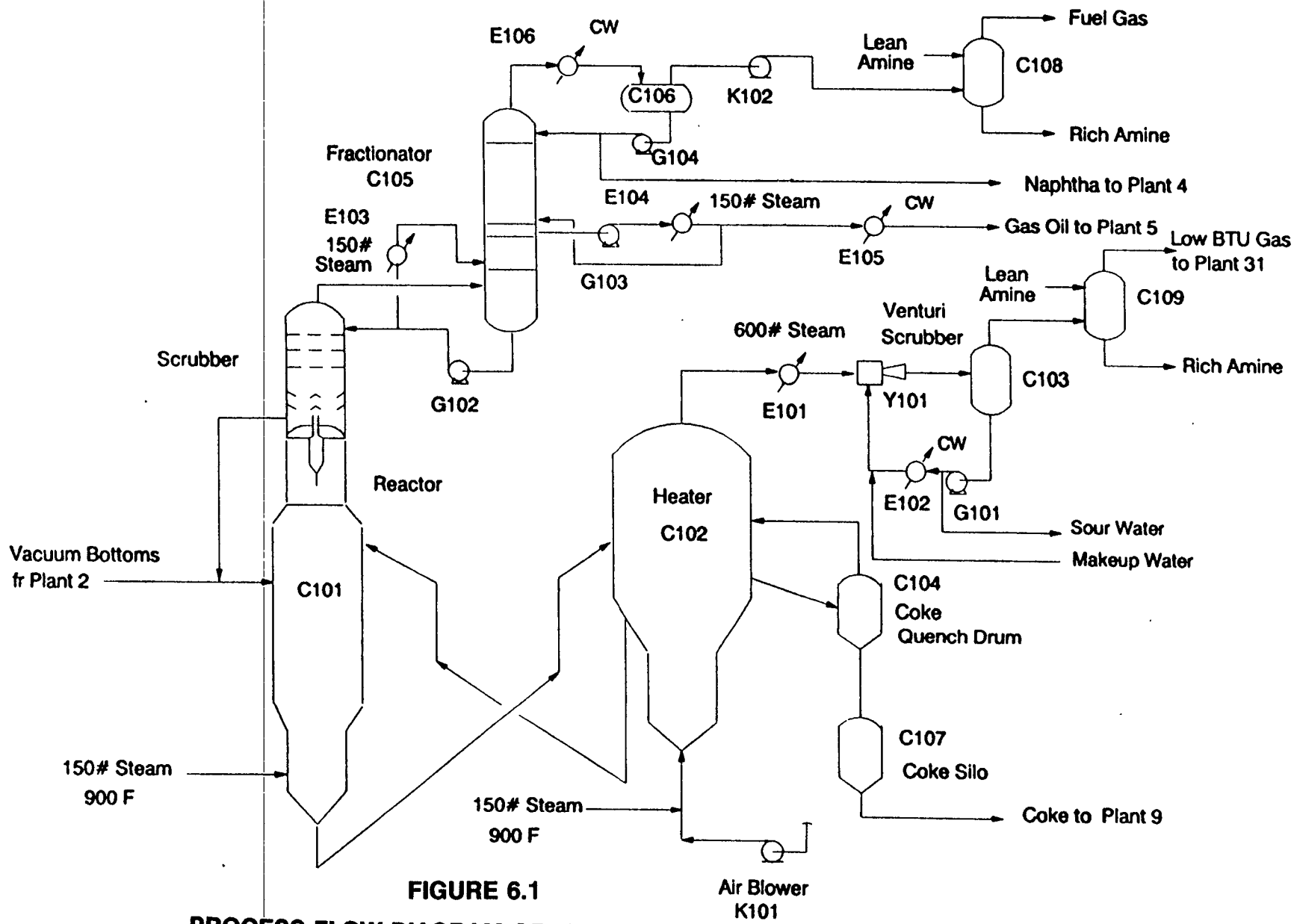

FIGURE 6.1

PROCESS FLOW DIAGRAM OF FLUID COKER

FCOKE.DRW

6.3 Material Balance for the Dir ctly Affected Plant

The overall material balance for the Coker plant (Plant 8-02) is shown in Table 6.2. In addition, the overall material balance for this liquefaction plant, Plant 2 is shown in Figure 6.2.

TABLE 6.2

OVERALL MATERIAL BALANCE FOR FLUID COKER (PLANT 8-02)

PLANT INPUT

Stream No	8.1	8.2	8.3	8.4	8.5		
COMPONENTS	FEED FR PLT 2 #/hr	AIR #/hr	SUP HT STEAM #/hr	LEAN AMINE #/hr	MAKEUP WATER #/hr	RXN DELTA #/hr	TOTAL INPUT #/hr
O2	0	3071	0	0	0	-3071	0
N2	0	10107	0	0	0	-203	9904
H2	0	0	0	0	0	6691	6691
H2O	0	0	42000	2692	14430	2429	61551
H2S	0	0	0	13	0	617	630
NH3	0	0	0	0	0	527	527
CO	0	0	0	0	0	606	606
CO2	0	0	0	8	0	2969	2977
C1	0	0	0	0	0	10816	10816
C2	0	0	0	0	0	3543	3543
C3	0	0	0	0	0	1772	1772
C4	0	0	0	0	0	271	271
C5-350	0	0	0	0	0	3193	3193
350-450	0	0	0	0	0	2890	2890
450-850	5299	0	0	0	0	12251	17550
850-1000	0	0	0	0	0	14156	14156
1000+	333080	0	0	0	0	-218500	114580
PHENOLS	0	0	0	0	0	0	0
MEA	0	0	0	1632	0	0	1632
UNCONVERTED COAL	90966	0	0	0	0	-90966	0
ASH	163510	0	0	0	0	-163510	0
COKE	0	0	0	0	0	413519	413519
TOTAL	592855	13178	42000	4345	14430	0	666808

PLANT OUTPUT

Stream No.	8.6	8.7	8.8	8.9	8.10	8.11	8.12	8.13	
COMPONENTS	LOW BTU GAS #/hr	FUEL GAS #/hr	NAPHTHA #/hr	GAS OIL #/hr	850-1000 #/hr	COKE #/hr	RICH AMINE #/hr	SOUR WATER #/hr	TOTAL OUTPUT #/hr
O2	0	0	0	0	0	0	0	0	0
N2	9904	0	0	0	0	0	0	0	9904
H2	1170	5521	0	0	0	0	0	0	6691
H2O	1108	85	0	0	0	0	2616	57742	61551
H2S	0	0	0	0	0	0	519	111	630
NH3	0	119	0	0	0	0	0	408	527
CO	545	61	0	0	0	0	0	0	606
CO2	2356	0	0	0	0	0	621	0	2977
C1	438	10378	0	0	0	0	0	0	10816
C2	0	3543	0	0	0	0	0	0	3543
C3	0	1772	0	0	0	0	0	0	1772
C4	0	271	0	0	0	0	0	0	271
C5-350	0	83	2815	295	0	0	0	0	3193
350-450	0	0	84	2806	0	0	0	0	2890
450-850	0	0	0	17550	0	0	0	0	17550
850-1000	0	0	0	0	14156	0	0	0	14156
1000+	0	0	0	0	0	114580	0	0	114580
PHENOLS	0	0	0	0	0	0	0	0	0
MEA	0	0	0	0	0	0	1632	0	1632
UNCONVERTED COAL	0	0	0	0	0	0	0	0	0
ASH	0	0	0	0	0	0	0	0	0
COKE	0	0	0	0	0	413519	0	0	413519
TOTAL	15521	21833	2899	20651	14156	528099	5388	58261	666808

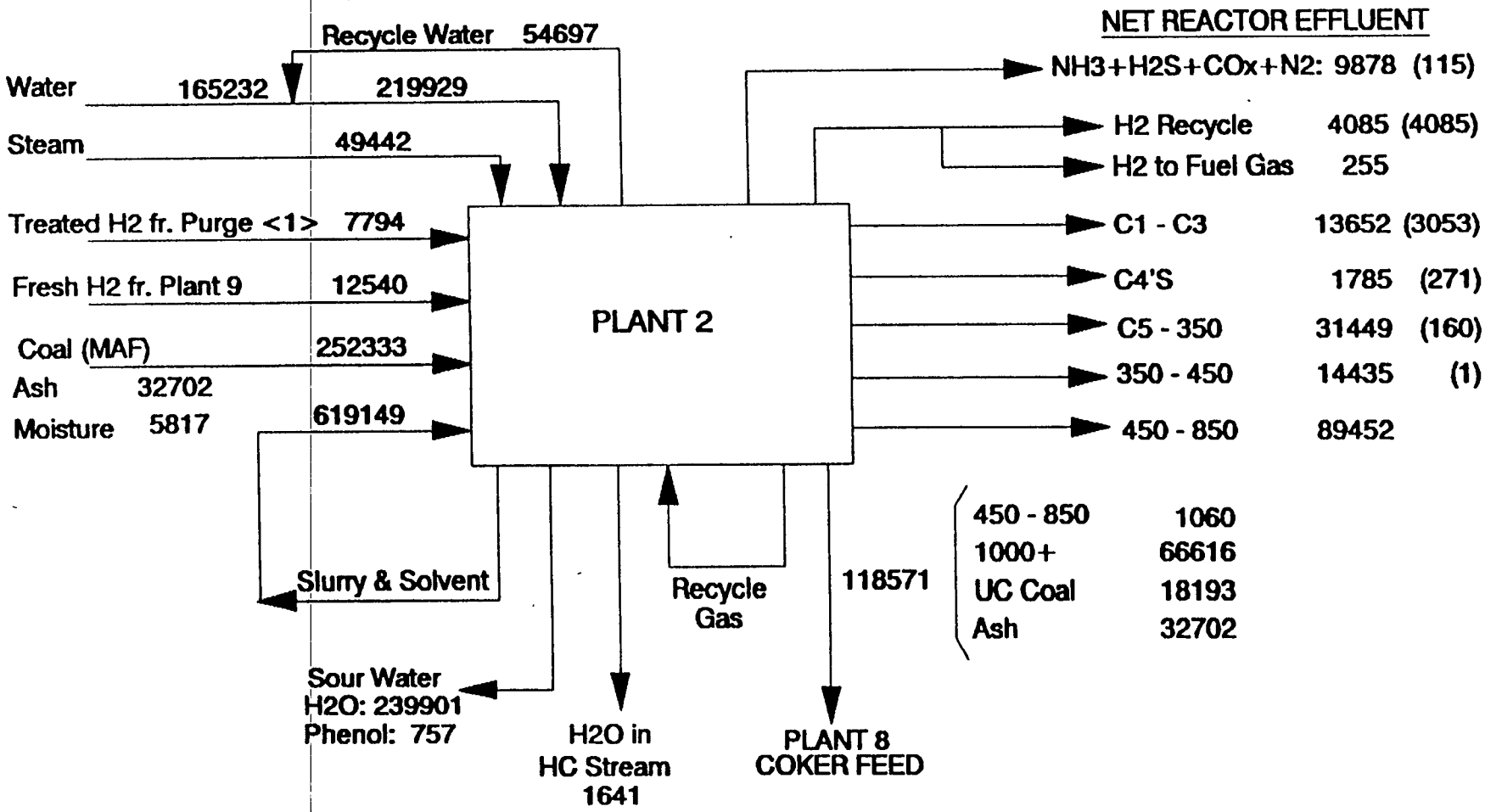

NOTES: . Flow rate in lbs/hr

. Numbers in parenthesis in Net Reaction Effluent streams are due to treated H2 input from Purge stream <1>. Therefore, to calculate the % yield subtract out the corresponding number in parenthesis.

. Th HC's in sour water are shown in net reactor effluent.

. Th re are five trains of Liquefaction Reactors.

FIGURE 6.2 OVERALL MATERIAL BALANCE PER TRAIN OF COAL LIQUEFACTION PLANT (PLANT 2-02)

6.4 Utility Summary for the Directly Affect d Plant.

The utility requirement for the directly affected plant (Plant 8-02) is shown in Table 6.3.

TABLE 6.3

UTILITY REQUIREMENT FOR PLANT 8-02

Steam	
600 psig superheated, lbs/hr	-4,265
150 psig saturated, lbs/hr	31,524
Cooling water, gpm	978
Electricity, KW	7,056
Fuel Gas, MMBtu/hr	-624

6.5 Overall Impact

As mentioned earlier, in this option a FLUID COKER unit is introduced to process vacuum bottoms replacing the critical solvent extraction unit (Kerr McGee's ROSE-SR) used for base line designs. The overall impact on the entire complex due to such a change has been quantified based on the throughput adjustments to all the indirectly affected plants. Such effects are included in this report as: 1) Overall plant configuration and overall material balance (subsection 6.5.1), overall utility summary (subsection 6.5.2), overall water flow distribution (subsection 6.5.3) and overall hydrogen flow distribution (subsection 6.5.4).

6.5.1 Overall Plant Configuration and Overall Material Balance

The overall plant configuration and overall material balance for this option are shown in the same figure, Figure 6.3.

6.5.2 Overall Utility Summary

The overall utility summary for this option is shown in Table 6.4.

6.5.3 Overall Water Flow Distribution

The overall water flow distribution for this entire complex is shown in Figure 6.4.

6.5.4 Overall Hydrogen Flow Distribution

The overall hydrogen flow distribution for the entire complex is shown in Figure 6.5.

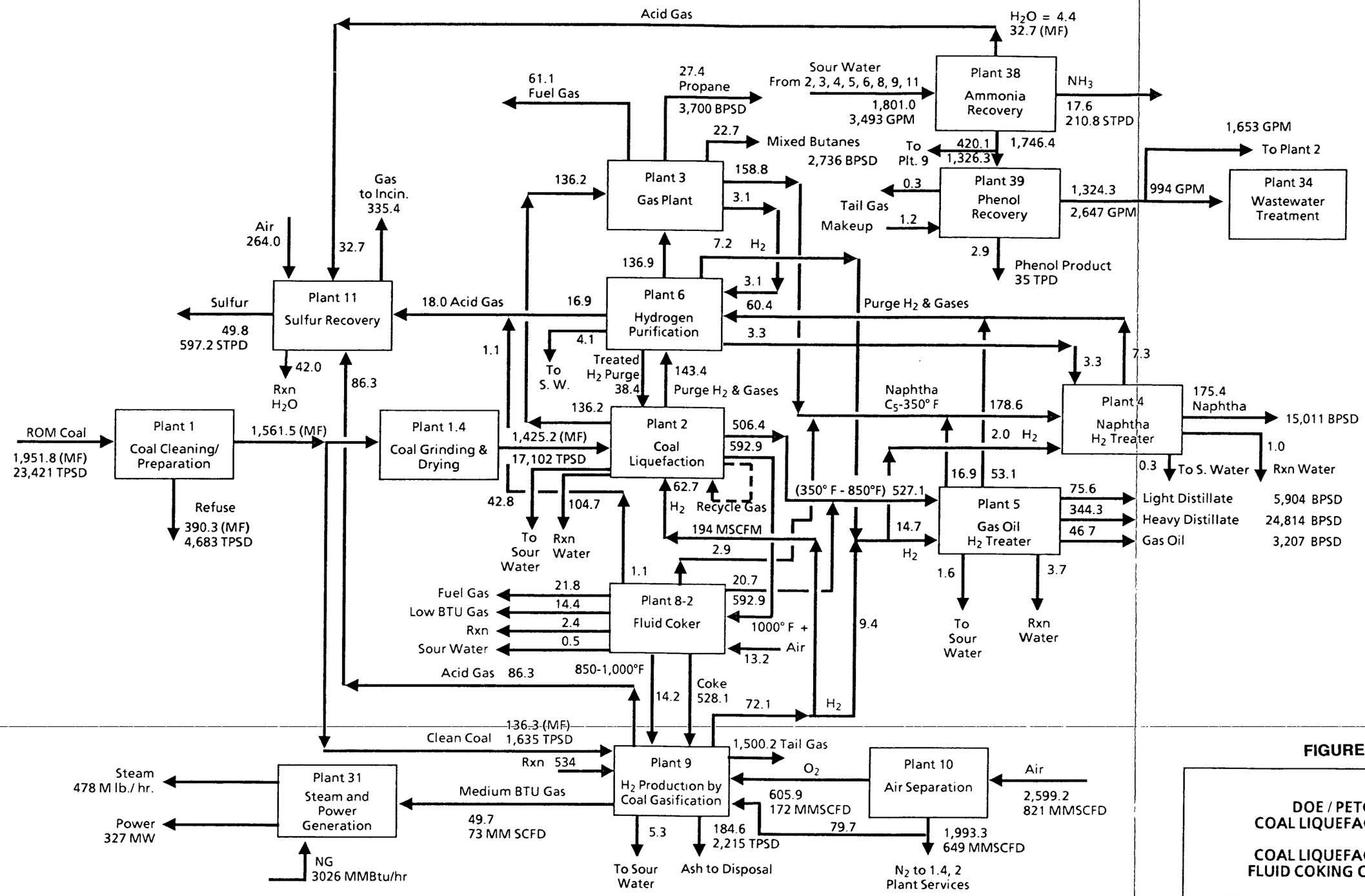

Revised 02/3/93

0991004-5

Notes:

1. Flow rates are in MLB/HR unless noted and on dry basis
2. Minor streams including steam, water, sour water, and make-up amine are not shown on this diagram
3. Flow rates around plants #38, 39, 34 are shown on wet basis

FIGURE 6.3

DOE / PETC
COAL LIQUEFACTION

COAL LIQUEFACTION
FLUID COKING OPTION

OVERALL PLANT CONFIGURATION
AND
OVERALL MATERIAL BALANCE

TABLE 6.4

OVERALL UTILITY BALANCE
COAL LIQUEFACTION FLUID COKING OPTION

Plant No.	PLANT NAME	Fuel Gas MMbtu/hr	Electric Power KW	Steam Psig, Lb/hr 600 Sup @720 F	600 @489 F	150 @366 F	50 @298 F	Cond/BFW Net Cons lb/hr	Cooling Water gpm	Sour Water gpm	Waste Water gpm	Makeup Water gpm	Air scfm	Nitrogen scfm
	PROCESSING UNITS													
1	Coal Cleaning and Handling		6,686								633			
1.4	Coal Griding and Drying	486	12,114						240				5,956	75,063
2	Coal Liquefaction	786	42,513	5,565	(107,449)	(13,113)	56,115	306,092	5,834	(2,399)				515
3	Gas Plant	(1,304)	728		316,336		13,707	(330,043)	17,511	(4)				
4	Naphtha Hydrotreater	58	840		20,829			(20,829)	2,006	(32)		(29)		
5	Gas Oil Hydrotreater	127	1,711		51,089	(26,598)		(20,565)	6,462	(69)		(57)		
6	Hydrogen Purification		38,341				59,813	(59,813)	6,149	(70)		(60)		
8-2	Fluid Coking	(624)	7,056		(4,265)	31,524		14,741	978	(115)		(29)		
9	H2 Production by Coal Gasification	(765)	49,272		(227,458)	(594,681)	(609,023)	1,431,162	41,002	(703)	95	(932)		18,405
10	Air Separation		129,808											(450,447)
11	By-product Sulfur Recovery	56	2,470		48,363	(150,471)	43,936	58,172	6,555	(101)				
ALL	Common Users			73000		40000	90000	(193,000)				(532)	9044	
	Sub Total (Process)	(1,180)	291,539	78,565	97,445	(713,339)	(345,452)	1,185,917	86,737	(3,493)	728	(1,639)	15,000	(356,464)
	OFFSITES													
19	Relief and Blowdown		19											
20	Tankage		6,758			22,000	3,300	(25,300)	100					
30	Electrical Distribution													
31	Steam and Power Generation	3,791	(327,416)	(477,686)		131,139	278,478	(235,066)	52,723		(259)	(865)		
32	Raw, Cooling and Potable Water Systems		11,489						(215,044)		(738)	10,171		
33	Fire Protection		44											
34	Sewage & Effluent Treatment		7,313				3,000	(3,000)				(738)		
35	Instrument & Plant Air Systems		2,894										(15,000)	
36	Purge and Flush Oil System		258											
37	Solid Waste Disposal		48								90			
38	Ammonia Recovery		1,417		301,676	537,813		(839,490)	71,078	3,493				
39	Phenol Recovery		802			22,387	60,674	(83,061)	4,406		(994)			
Other	Bldg 41,42, Light, Etc.		4835											
	Natural Gas Imported	(2,611)												
	Off Site BL and Evaporation										1,173	(6,929)		
	Sub Total (Offsite)	1,180	(291,539)	(477,686)	301,676	713,339	345,452	(1,185,917)	(86,737)	3,493	(728)	1,639	(15,000)	0
	GRAND TOTAL	0	0	(399,121)	399,121	0	0	0	0	0	0	0	0	(356,464)

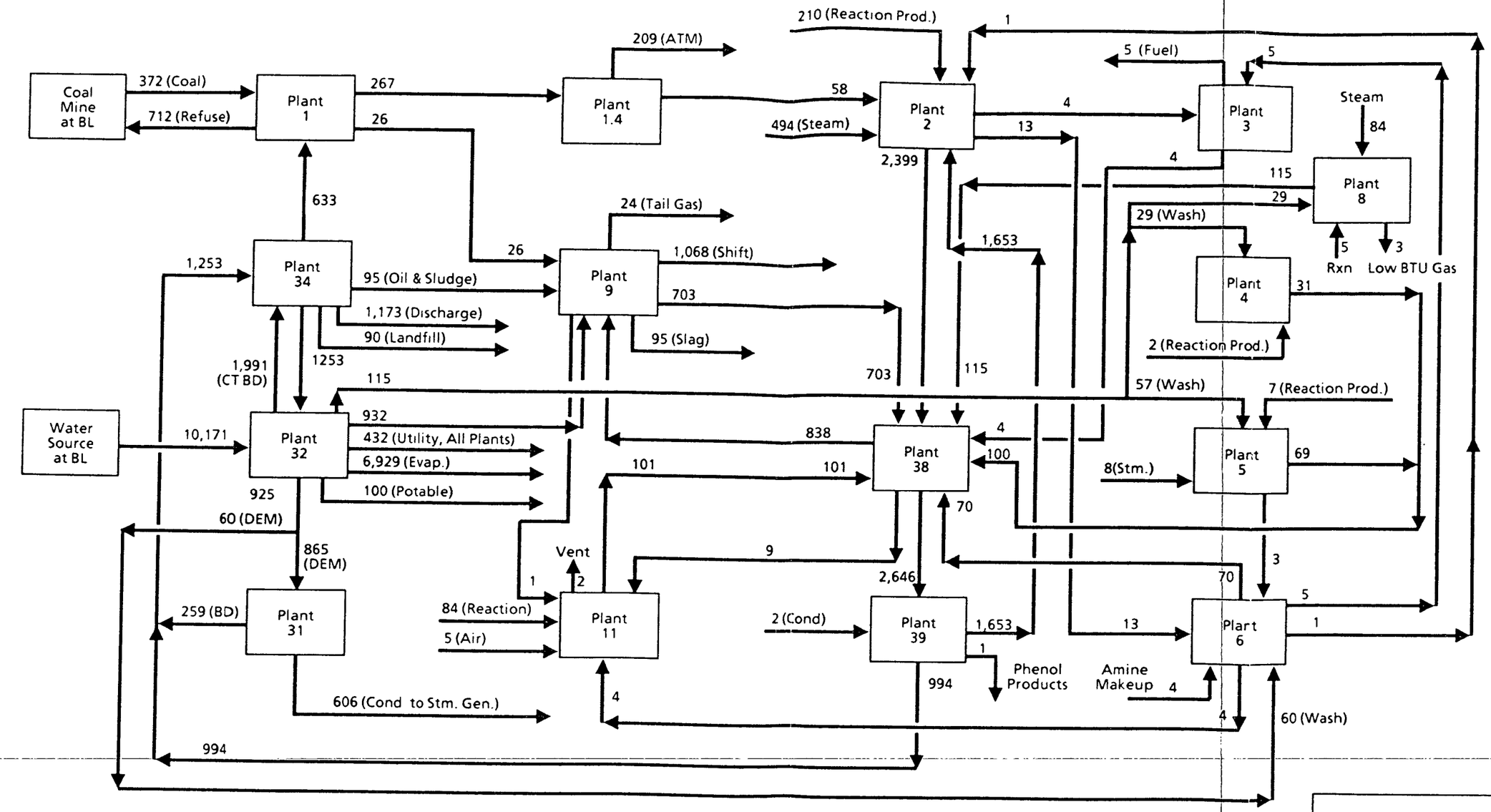

Notes:

1. Flows are for normal operation and in GPM

FIGURE 6.4

DOE / PETC COAL LIQUEFACTION

FLUID COKING OPTION

OVERALL WATER FLOW DISTRIBUTION

1091056-1

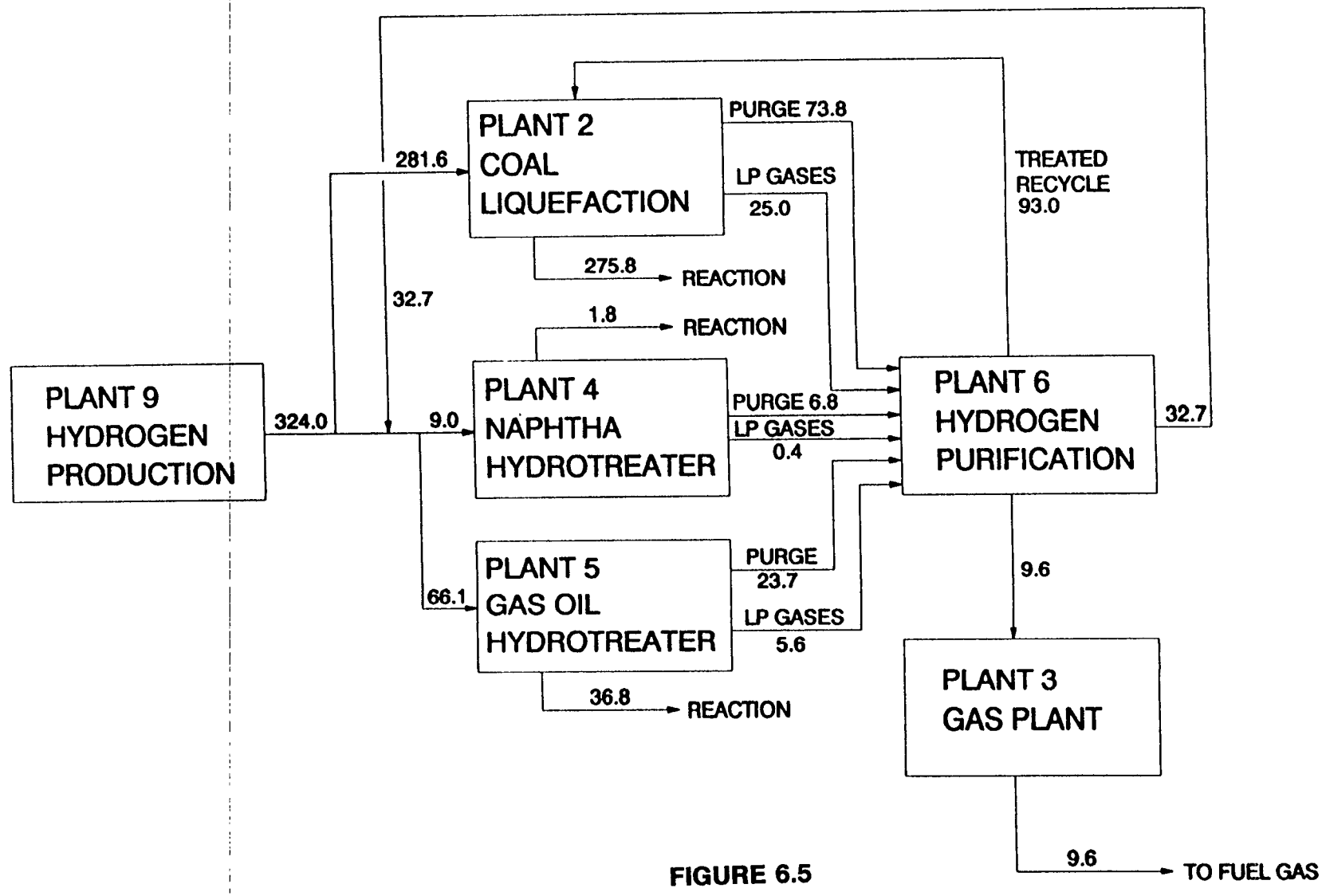

NOTES:
Hydrogen flow rates are in MMSCFD (Pure H2)

FIGURE 6.5

OVERALL HYDROGEN FLOW DISTRIBUTION
FLUID COKING OPTION

H2_FLOW3.DRW 8/23/91

7. OPTION 6

7. Option 6 (St am Reforming of Natural Gas Plus FBC Unit for Hydrogen Production)

7.1 Design Basis, Criteria and Considerations

In this option, as discussed earlier, the hydrogen production method is changed from coal gasification (Plant 9) to steam methane reforming (Plant 9-01).

The following assumptions/design basis were utilized to develop this option:

Ash concentrate from Plant 8 (Kerr McGee's ROSE-SR plant) is sent to Fluidized Bed Combustion (FBC) plant to generate high pressure steam.

Reformer produces 99.9% pure hydrogen for the complex. A total of three 150 MMSCFD hydrogen trains are required.

Fluid Bed Combustor (FBC) and Steam Turbine Generator (STG) is designed so that 50% of the ash concentrate from Plant 8 is sent to a single FBC/STG. Therefore, there are two trains FBC/STG system with one additional spare train for plant reliability purpose.

The directly affected plant is, of course, Plant 9 and there is addition of FBC plant (In Plant 31.4-01) for the ROSE-SR bottoms. Indirectly affected plants are Plant 1 (Coal Cleaning and Handling Plant), Plant 11 (By-Product Sulfur Recovery Plant), Plant 31 (Steam and power Generation Plant), Plant 34 (Sewage and Effluent Water Treatment Plant), Plant 38 (Ammonia Recovery Plant), and Plant 39 (Phenol Recovery Plant).

The reformer was developed as a licensed process with limited information supplied by KTI.

7.2 Process Description/Process Flow Diagram for the Directly Affected Plant (Plant 9-01)

Reformer

Natural gas at 50 psig and 100°F is compressed in the natural gas feed compressors to 350 psig. The high pressure gas is combined with 350 psig steam produced with the unit or 600 psig steam, which has been let down to 350 psig, and reformed in a reformer furnace.

The waste heat in the flue gases from the reforming furnace is recovered in a series of heat exchangers, with the flue gases exiting through a stack at about 250°F.

Part of the heat in the reformer product is recovered as 600 psig steam in the waste heat boiler. The reformer product gas is further cooled in the product cooler and combined with steam before entering the shift reactors to provide sufficient steam for shift reaction to occur. The gas and steam mixture pass through beds of high and low temperature shift reactors in series to convert carbon monoxide to carbon dioxide and hydrogen.

The product from the shift converters is further cooled and sent to Pressure Swing Absorption (PSA) for hydrogen purification. The PSA plants separate the hydrogen from carbon dioxide and other unconverted gas, which are used as fuel. This plant is capable of producing a 99.9% purity hydrogen. The process flow sketch for the Reformer is shown in Figure 7.1.

Fluidized Bed Combustor

As shown in the process flow sketch (Figure 7.2), the fluidized bed combustor boiler feed system conveys ash concentrate from live storage to the boiler feed silos. From these silos the ash concentrate is fed to the fluidized bed combustors.

The fluidized bed combustors are designed to burn 4,400 tons/day of ash concentrate from ROSE-SR plant and to produce steam for power generation. Three identical circulating fluidized bed boilers are provided to supply steam to the turbines. Each boiler is a drum and reheat type, with a balanced draft furnace.

A limestone preparation system is provided to dry and prepare limestone to proper size as required by the boiler manufacturer. Prepared limestone is conveyed pneumatically and fed to the combustor boiler furnace. The limestone injection is used to control sulfur dioxide emissions. The bottom ash is removed from the bottom of the combustor and sent to a silo for truck unloading.

Flue gas exiting from the boilers flows to the cyclones where large size solid particles are removed and recycled back to the furnace. The flue gas from the cyclones flows through the air heater where the primary and secondary air are preheated before flowing to the furnace. The gas leaves the air heater and enters a baghouse. The baghouse is provided for controlling particulate emissions from the boiler.

The flue gas leaves the baghouse and is directed by an induced draft fan to the stack. Fly ash is collected and withdrawn from the baghouse and is sent to a fly ash silo for truck loading.

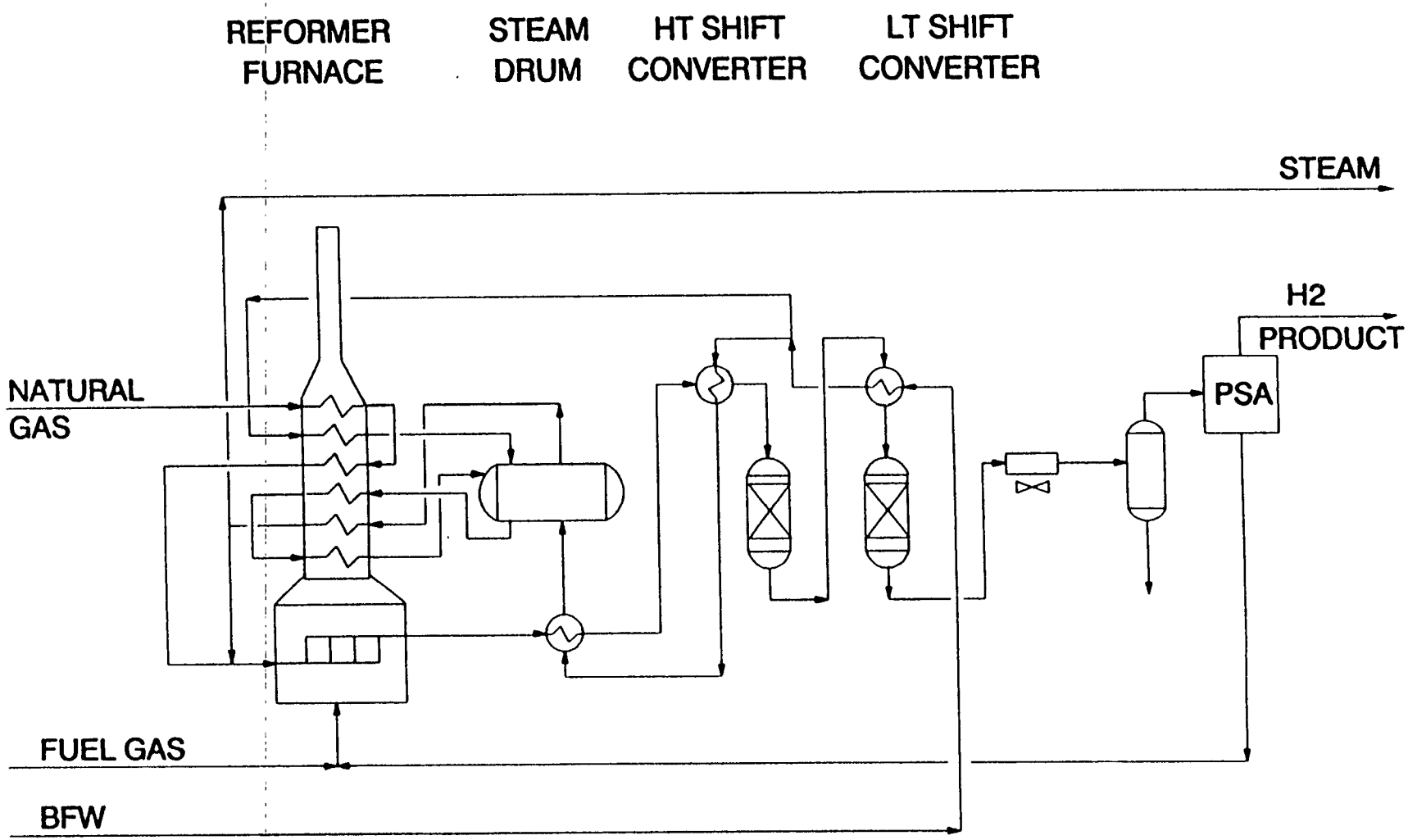

FIGURE 7.11

Plant 9-01

PROCESS FLOW DIAGRAM OF STEAM REFORMER FOR NATURAL GAS

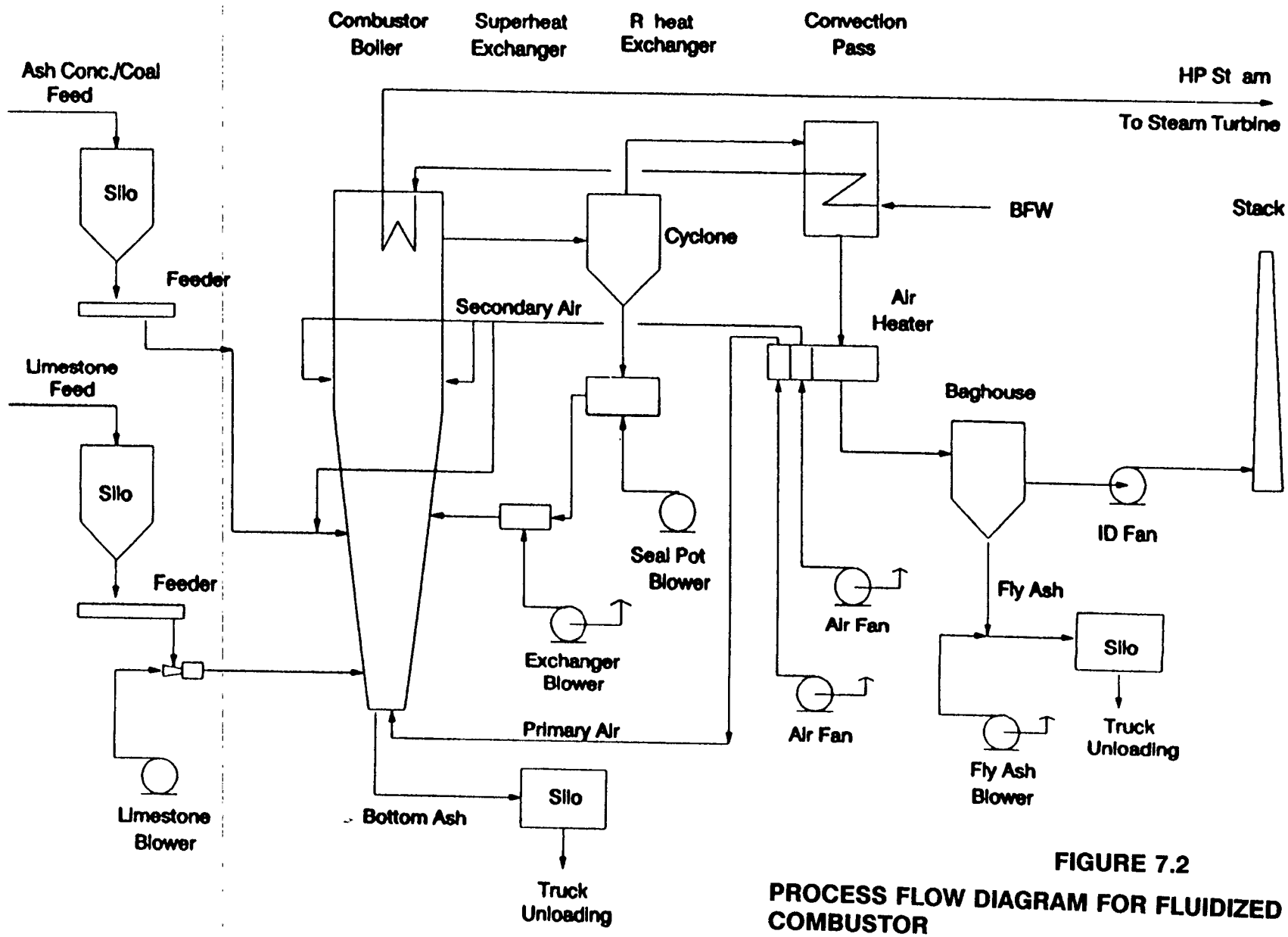

FIGURE 7.2

PROCESS FLOW DIAGRAM FOR FLUIDIZED BED COMBUSTOR

PLANT 31.4-01

FBC DRW

Steam Turbine Generator

The description of steam turbine generator is shown schematically in Figure 7.3. As shown in this figure, high pressure steam from the fluidized bed combustor (2620 psig) is sent to the high pressure (HP) turbine. The turbine exhaust passes through a desuperheater before entering the intermediate pressure (IP) turbine. High pressure steam let down to 600 psig also passes through a desuperheater before entering the IP turbine. The exhaust from the IP turbine is split and sent to two low pressure (LP) turbines operating in parallel. Each of the LP turbines has a surface condenser on its exhaust. The condenser operates under vacuum (1.0 psia). The condensate is recovered and returned to the deaerators at the boiler feedwater treating area.

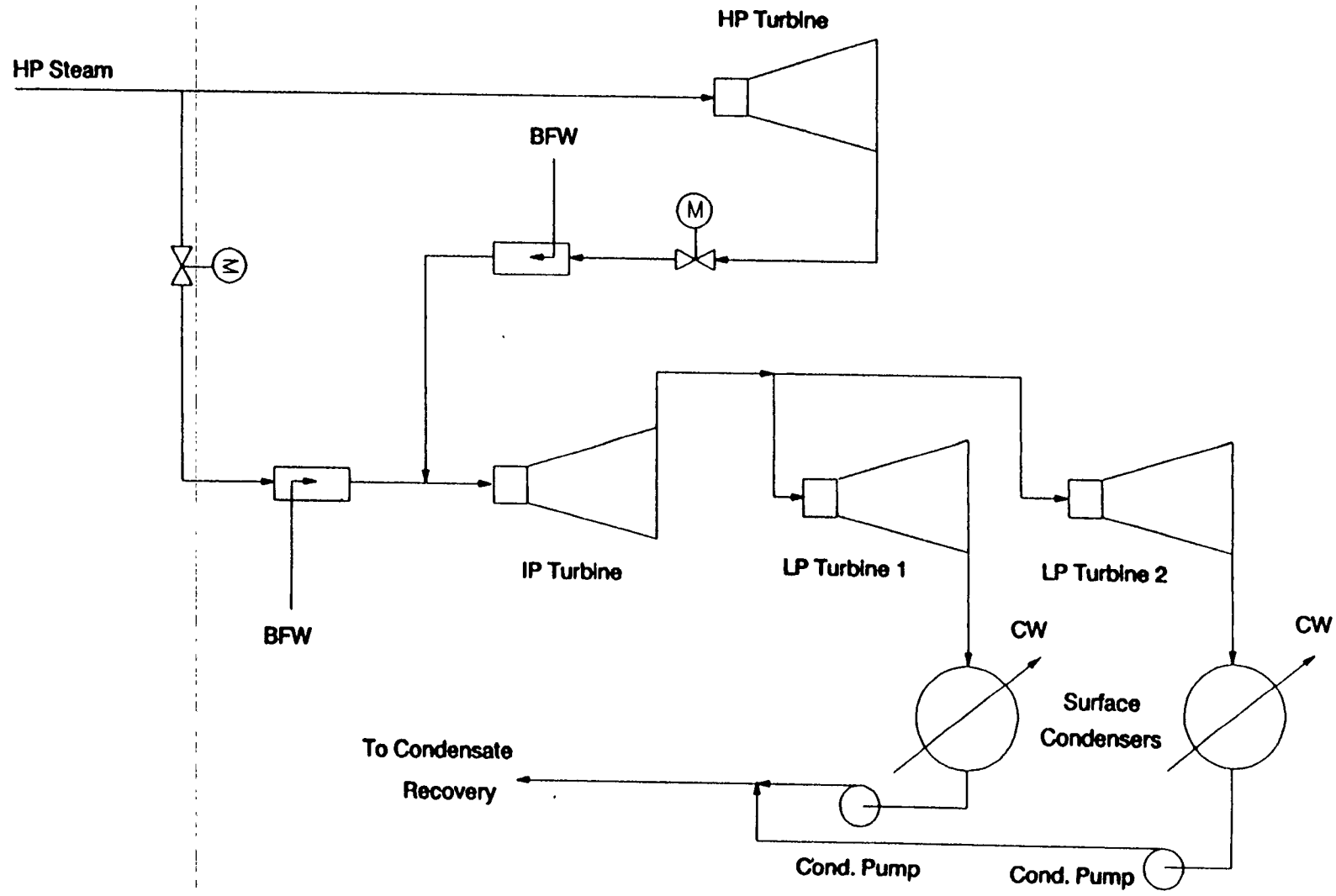

FIGURE 7.3 **PROCESS FLOW DIAGRAM OF STEAM TURBINE GENERATOR**

PLANT 31.1-01

ST DRW

7.3 Material Balanc f r the Directly Affected Plant

The overall material balance for the Steam Methane Reformer (Plant 9-01) and Fluid Bed Combustion unit (Plant 31.9) are shown in Table 7.1 and 7.2, respectively. In addition, the overall material balance for the liquefaction plant, Plant 2 is shown in Figure 7.4.

TABLE 7.1

OVERALL MATERIAL BALANCE FOR PLANT 9-01

PLANT 9-01

PLANT INPUT

Stream No.	9.1	9.2	
	NATURAL GAS	STEAM	TOTAL INPUT
COMPONENTS	#/hr	#/hr	#/hr
H2			0
H2O		864428	864428
CO			0
CO2			0
C1	307352		307352
TOTAL	307352	864428	1171780

PLANT OUTPUT

Stream No.	9.3	9.4	9.5	
	HYDROGEN	OFFGAS	SOUR WATER	TOTAL OUTPUT
COMPONENTS	#/hr	#/hr	#/hr	#/hr
H2	91985	11670		103655
H2O		30640	378260	408900
CO		23751		23751
CO2		538095		538095
C1		97379		97379
TOTAL	91985	701535	378260	1171780

TABLE 7.2

OVERALL MATERIAL BALANCE FOR PLANT 31.1 & 31.4

PLANT INPUT

COMPONENTS	ASH CONC #/hr	LIMESTONE #/hr	AIR #/hr	TOTAL INPUT #/hr
N2			2902203	2902203
O2			875967	875967
H2O				0
CO2				0
850-1000	8330			8330
1000+	105855			105855
CaCO3		40000		40000
CaSO4				0
UC COAL	90965			90965
ASH	163510			163510
TOTAL	368660	40000	3778170	4186830

PLANT OUTPUT

COMPONENTS	FLUE GAS #/hr	TOTAL SOLID #/hr	TOTAL OUTPUT #/hr
N2	2906074		2906074
O2	299927		299927
H2O	96528		96528
CO2	667974	1930	669904
850-1000			0
1000+			0
CaCO3			0
CaSO4		50897	50897
UC COAL			0
ASH		163500	163500
TOTAL	3970503	216327	4186830

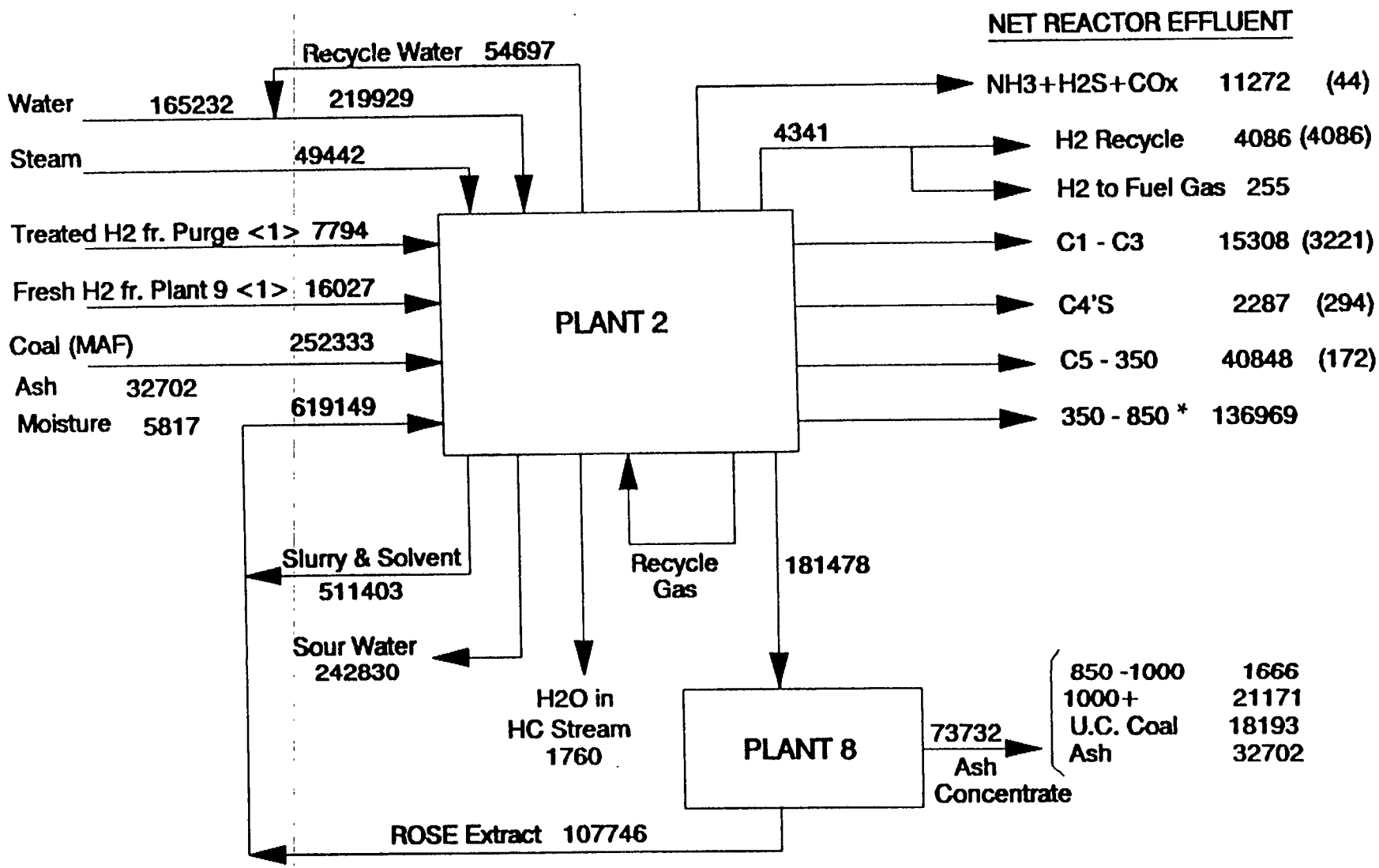

NOTES: . Flow rate in lbs/hr
. Number in parenthesis is due to input streams <1>. Therefore, to calculate the % yield subtract out th corresponding number in parenthesis.
. The HC's in sour water are shown in n t reactor effluent.
* 350-850 fraction includes phenols

FIGURE 7.4 OVERALL MATERIAL BALANCE PER TRAIN OF COAL LIQUEFACTION PLANT (PLANT 2)

7.4 Utility Summary for the Directly Affected Plant.

The utility requirement for the directly affected plant (Plant 9-01) is shown in Table 7.3.

TABLE 7.3

Utility Requirement for Plant 9-01

Steam, 600 psig saturated, lbs/hr	-1,132,146
Cooling water, gpm	9,435
Electricity, KW	6,133
Fuel Gas, MMBtu/hr	1,542

7.5 Overall Impact

The overall impact on the entire complex due to the change in hydrogen production method from coal gasification, Plant 9 (in the base case design) to steam methane reforming (Plant 9-01) has been quantified based on the throughput adjustments to all the indirectly affected plants. Such effects are included in this report as: 1) Overall plant configuration and overall material balance (subsection 7.5.1), overall utility summary (subsection 7.5.2), overall water flow distribution (subsection 7.5.3) and overall hydrogen flow distribution (subsection 7.5.4).

7.5.1 Overall Plant Configuration and Overall Material Balance

The overall plant configuration and overall material balance for this option are shown in the same figure, Figure 7.5.

7.5.2 Overall Utility Summary

The overall utility summary for this option in shown in Table 7.4.

7.5.3 Overall Water Flow Distribution

The overall water flow distribution for the entire complex is shown in Figure 7.6.

7.5.4 Overall Hydrogen Flow Distribution

The overall hydrogen flow distribution for the entire complex is shown in Figure 7.7.

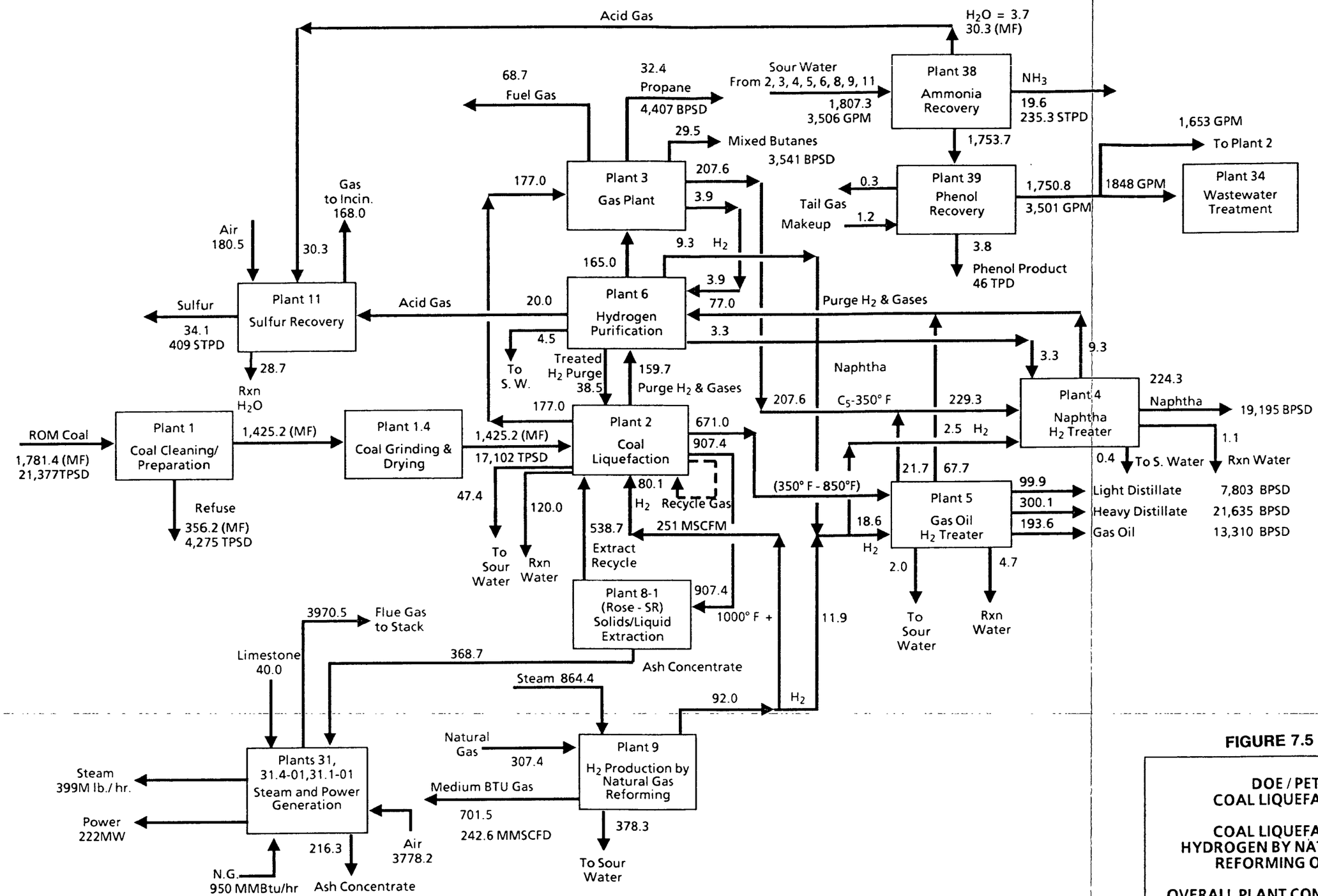

Revised 02/03/93

1091056-1

Notes:

1. Flow rates are in MLB/HR unless noted and on dry basis
2. Minor streams including steam, water, sour water, and make-up amine are not shown on this diagram
3. Flow rates around plants #38, 39, 34 are shown on wet basis

FIGURE 7.5

DOE / PETC
COAL LIQUEFACTION

COAL LIQUEFACTION
HYDROGEN BY NATURAL GAS
REFORMING OPTION

OVERALL PLANT CONFIGURATION
AND
OVERALL MATERIAL BALANCE

TABLE 7.4

OVERALL UTILITY BALANCE

COAL LIQUEFACTION H2 BY NATURAL GAS REFORMING OPTION

Plant No.	PLANT NAME	Fuel Gas MMbtu/hr	Electric Power KW	Steam Psig, Lb/hr 600 Sup @720 F	600 @489 F	150 @366 F	50 @298 F	Cond/BFW Net Cons lb/hr	Cooling Water gpm	Sour Water gpm	Waste Water gpm	Makeup Water gpm	Air scfm	Nitrogen scfm
	PROCESSING UNITS													
1	Coal Cleaning and Handling		6,103								577			
1.4	Coal Griding and Drying	486	12,114						240				5,956	75,063
2	Coal Liquefaction	1,090	58,988	5,565	(149,090)	(90,095)	56,115	424,715	8,095	(2,428)				715
3	Gas Plant	(1,489)	913		396,610		17,186	(413,796)	21,955	(5)				
4	Naphtha Hydrotreater	74	1,073		26,622			(26,622)	2,564	(40)		(38)		
5	Gas Oil Hydrotreater	162	2,179		65,048	(33,864)		(26,184)	8,228	(88)		(73)		
6	Hydrogen Purification		43,944				59,473	(59,473)	6,662	(70)		(60)		
8	Critical Solvent Deashing	212	4,363			25,419				(51)				
9-01	H2 Prod by Nat'l Gas Reforming	1,542	6,133		(1,132,146)			1,996,574	9,435	(757)				
11	By-product Sulfur Recovery	38	1,689		33,066	(102,878)	30,039	39,772	4,481	(68)				
ALL	Common Users			73000		40000	90000	(193,000)				(532)	9044	
	Sub Total (Process)	2,115	137,499	78,565	(759,890)	(161,418)	252,813	1,741,986	61,660	(3,507)	577	(703)	15,000	75,778
	OFFSITES													
19	Relief and Blowdown		19											
20	Tankage		6,758			22,000	3,300	(25,300)	100					
30	Electrical Distribution													
31	Steam and Power Generation	950		(78,565)			(319,976)	(588,516)			(302)	(2,276)		
31.1	Steam Turbine Generation		(222,000)	2,358,000				(2,523,000)	172,000			(330)		
31.4	Fluid Bed Combustion		18,261	(2,358,000)				2,358,000			(94)	(94)		
32	Raw, Cooling and Potable Water Systems		16,644						(311,553)		(1,204)	16,608		
33	Fire Protection		44											
34	Sewage & Effluent Treatment		13,083				3,000	(3,000)				(1,204)		
35	Instrument & Plant Air Systems		2,894										(15,000)	
36	Purge and Flush Oil System		258											
37	Solid Waste Disposal		48								90			
38	Ammonia Recovery		1,422		305,238	544,162		(849,399)	71,917	3,507				
39	Phenol Recovery		1,170			29,855	80,916	(110,771)	5,876		(1,848)			
Other	Bldg 41,42, Light, Etc.		4835											
	Natural Gas Imported	(3,065)												
	Off Site BL and Evaporation										2,781	(12,001)		
	Sub Total (Offsite)	(2,115)	(156,564)	(78,565)	305,238	596,017	(232,760)	(1,741,986)	(61,660)	3,507	(577)	703	(15,000)	0
	GRAND TOTAL	0	(19,065)	0	(454,652)	434,599	20,053	0	0	0	0	0	0	75,778

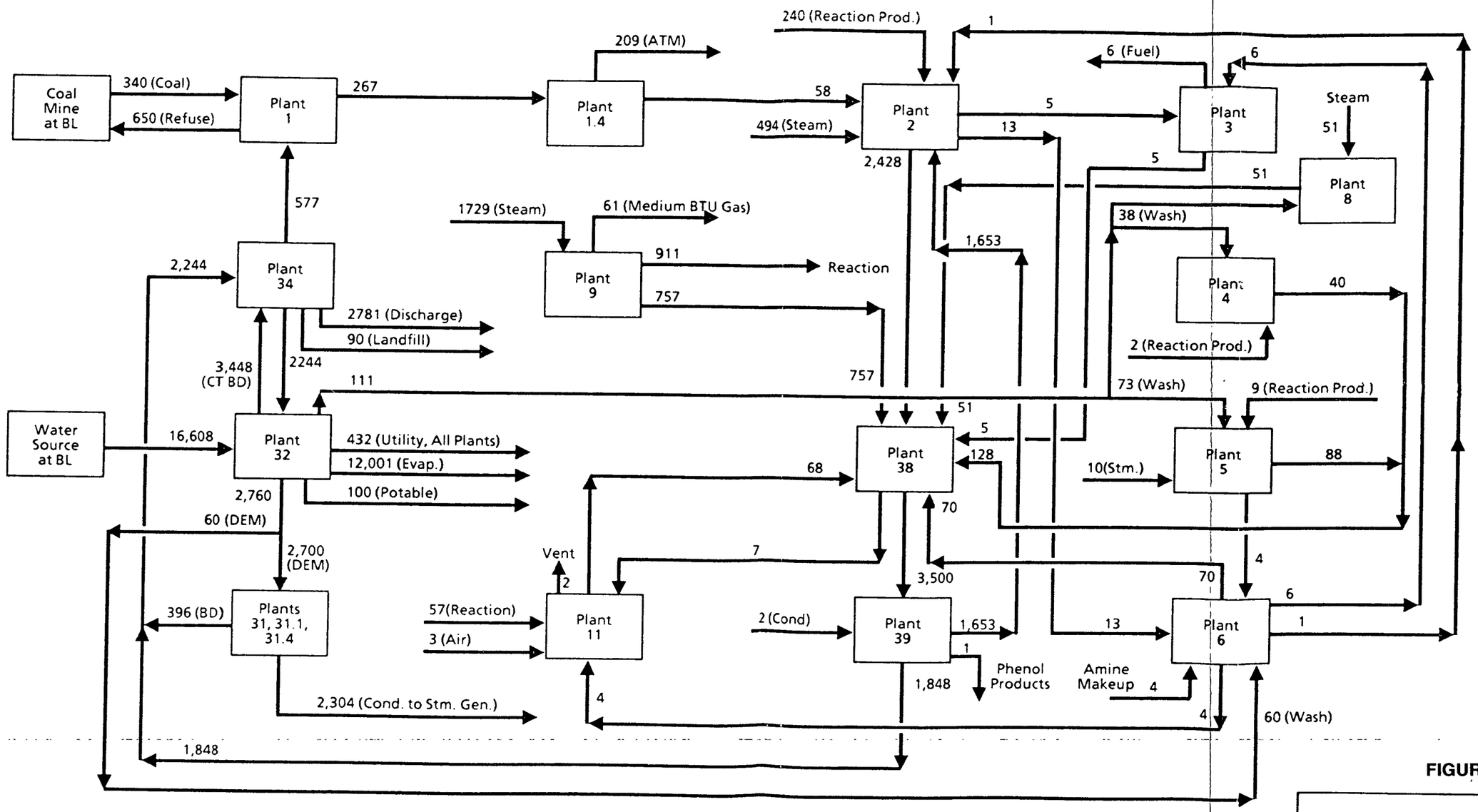

Notes:

1. Flows are for normal operation and in GPM

FIGURE 7.6

DOE / PETC COAL LIQUEFACTION

H_2 BY NATURAL GAS REFORMING OPTION

OVERALL WATER FLOW DISTRIBUTION

1091056-1

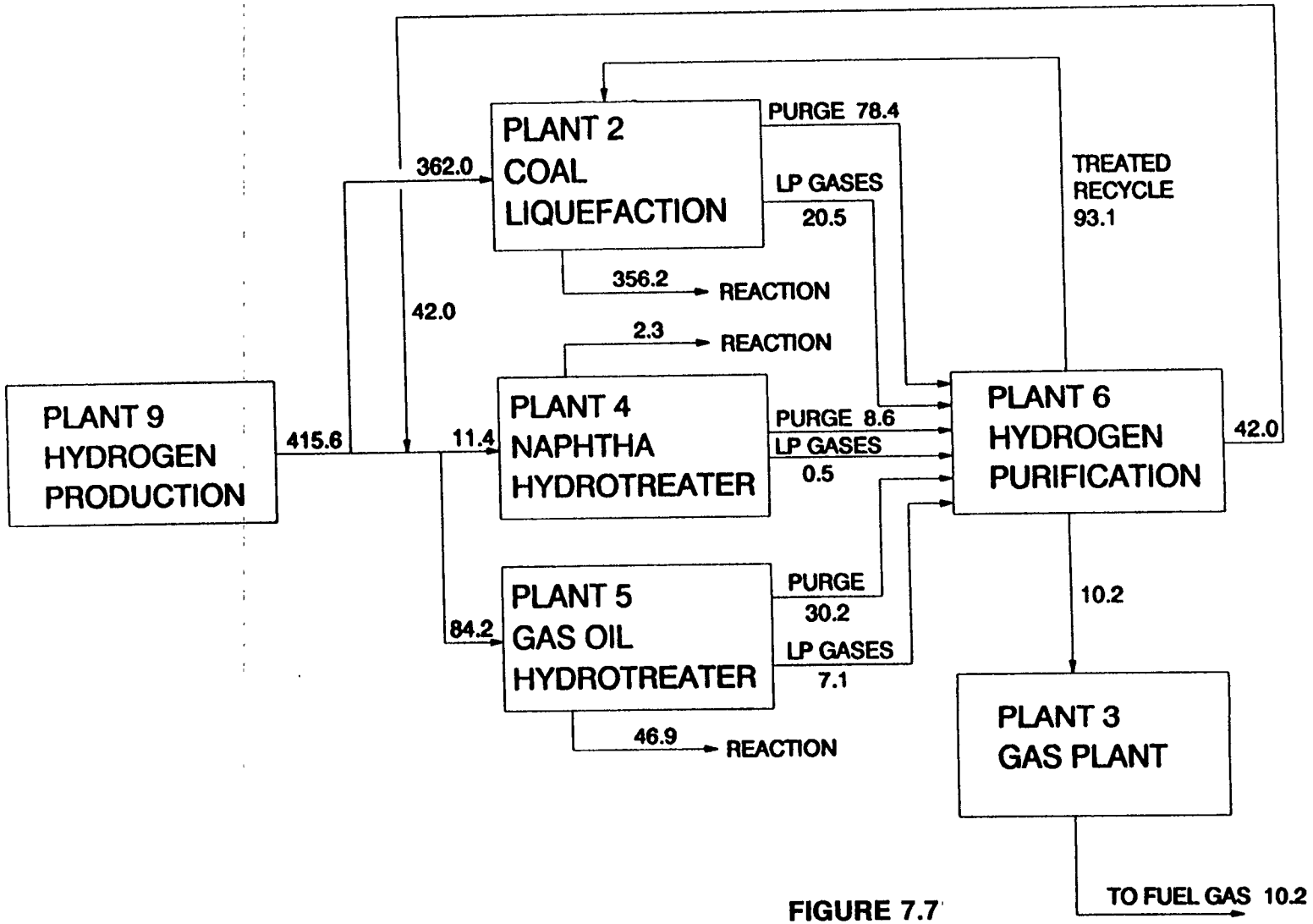

FIGURE 7.7

NOTES:
Hydrogen flow rates ar in MMSCFD (Pure H2)

OVERALL HYDROGEN FLOW DISTRIBUTION
HYDROGEN BY NATURAL GAS REFORMING OPTION

H2_FLOW4.DRW 8/28/91

8. OPTION 7

8. OPTION 7 (NAPHTHA REFORMING)

8.1 Design Basis, Criteria and Considerations

This option is incorporated in the study as an extension of the scope of the current study which was duly approved by DOE/PETC via a recent contract change.

In this option, the Continuous Catalyst Regeneration (CCR) Platforming process licensed by UOP Process Division is used. The Naphtha Reformer, Plant 7, is added downstream of Naphtha Hydrotreater (Plant 4 of Base Case) to produce a 95 RON clear reformate product.

This option was developed based on the Bechtel's in-house data generated during Bechtel's study in 1986 for Amoco Corporation, "Amoco Coal Liquefaction Study". In addition, the published information by Chevron Research Company, Richmond, California, (reference: "Aromatics Production from Coal Syncrudes", R.C. Robinson, H.A. Frumkin and R.F. Sullivan, Energy Progress, Vol 3, No. 3, 1983) and the proprietary UOP information utilized in a previous study by Bechtel in 1981 (Breckinridge Study) were also utilized to develop this option.

In developing this option, the following assumptions were made:

- Hydrotreated naphtha from Base Case is acceptable as reformer feedstock.

- Hydrogen Production rate was prorated from Amoco Study due to the target of 95 RON and the composition of the net hydrogen stream from the separator section of the reformer plant (Plant 7) were assumed same as that in the Breckinridge study.

- C1-C4 make was calculated based on Chevron results on Illinois H-Coal hydrotreated naphtha as presented in the above referenced Chevron study.

The directly affected plant is the new plant : Naphtha Reformer, Plant 7. The indirectly affected plants are Plants 1, 3, 6, 9, 10, 11, 31, 32, 38, 39.

8.2 Process Description/Process Flow Diagram for the Directly Affected Plant (Plant 7)

The catalytic reforming used for processing hydrotreated naphtha is the UOP continuous platforming process as shown in Figure 8.1. The regenerating section of the UOP continuous platforming process is presented in Figure 8.2.

Feed to the platformer is combined with recycle hydrogen, raised to the reaction temperature by heat exchange and a fired heater and charged to the reaction section. Temperature is maintained across the reaction section by interheaters. Effluent from the reactors is cooled by heat exchange and subsequent air and/or water cooling and is charged to the separation section. Separator gas is recycled to the reactors with the net hydrogen made sent to Hydrogen Purification Plant, Plant 6. Separator liquid is directed to the stabilization section. The overhead vapor from Stabilizer is sent to Gas Plant, Plant 3. The reformate from Stabilizer bottoms is cooled down before being sent to storage.

FIGURE 8.1

PROCESS FLOW DIAGRAM OF UOP CONTINUOUS PLATFORMING PROCESS

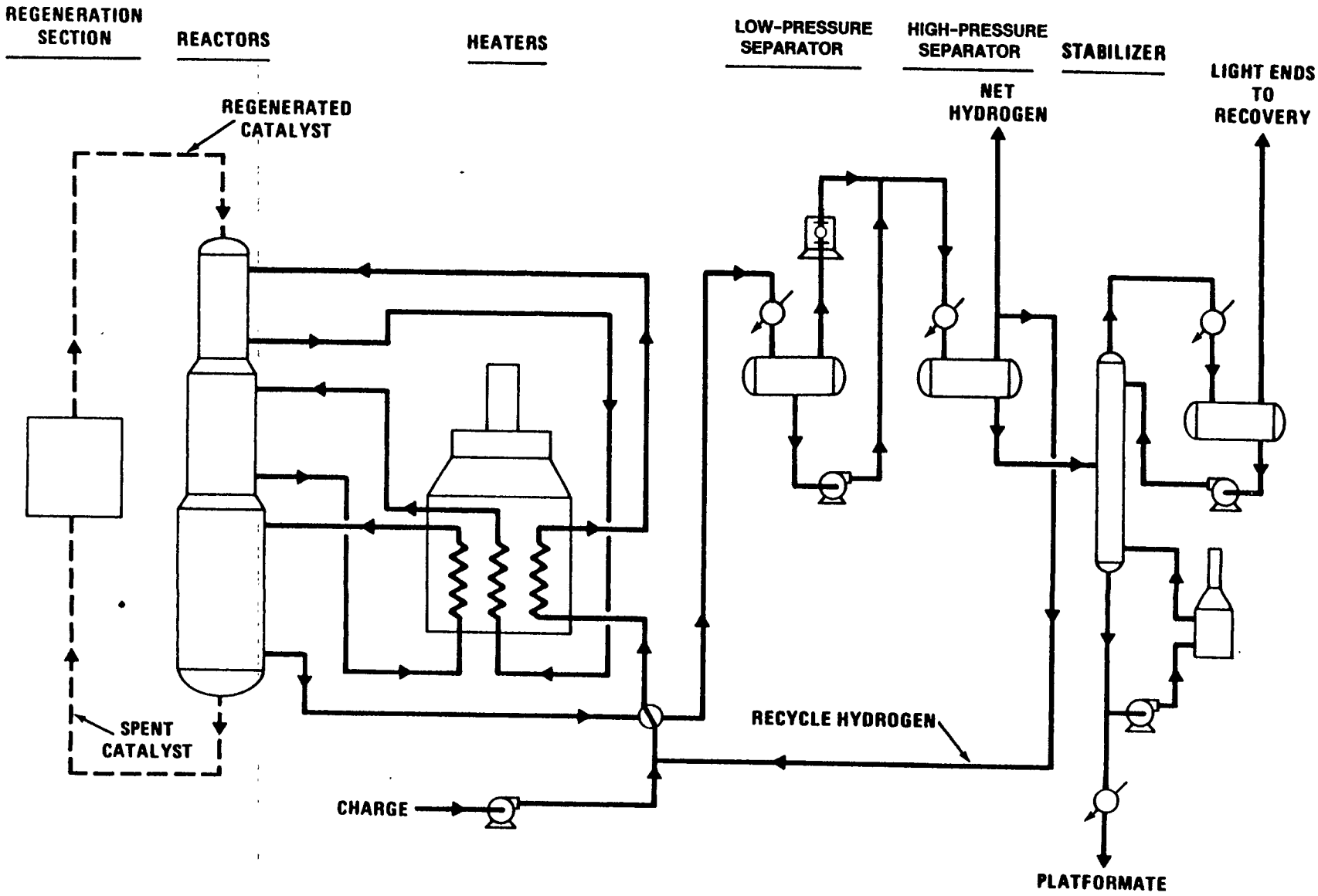

FIGURE 8.2

UOP CONTINUOUS PLATFORMING PROCESS
(REGENERATION SECTION)

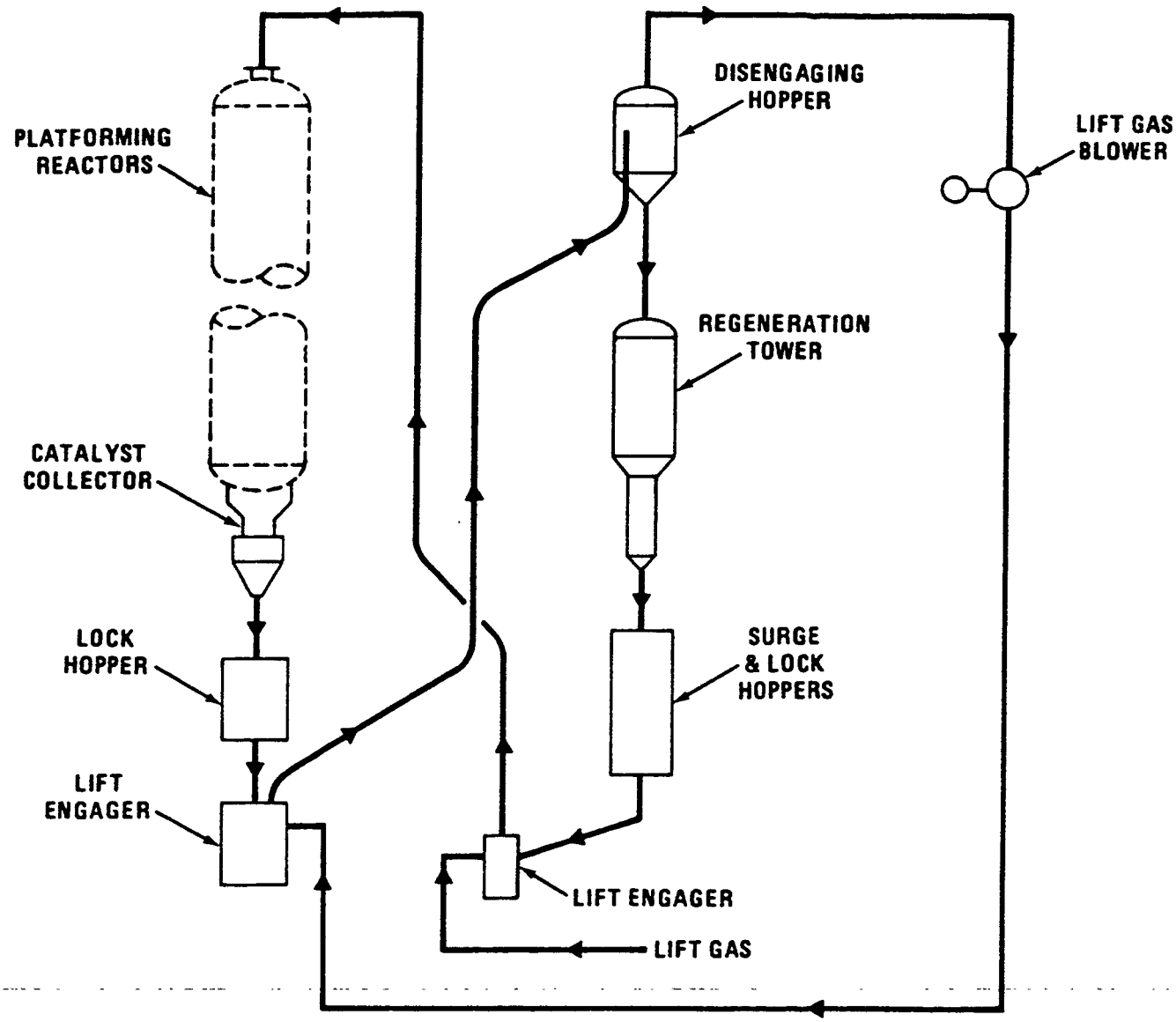

8.3 Material Balanc for th Directly Affect d Plant

The material balance for Naphtha Reformer (Plant 7) is shown in Figure 8.3. In addition, the overall material balance for the Coal Liquefaction Plant per train (Plant 2), the heart of the complex, is shown in Figure 8.4.

NAPHTHA REFORMING OPTION

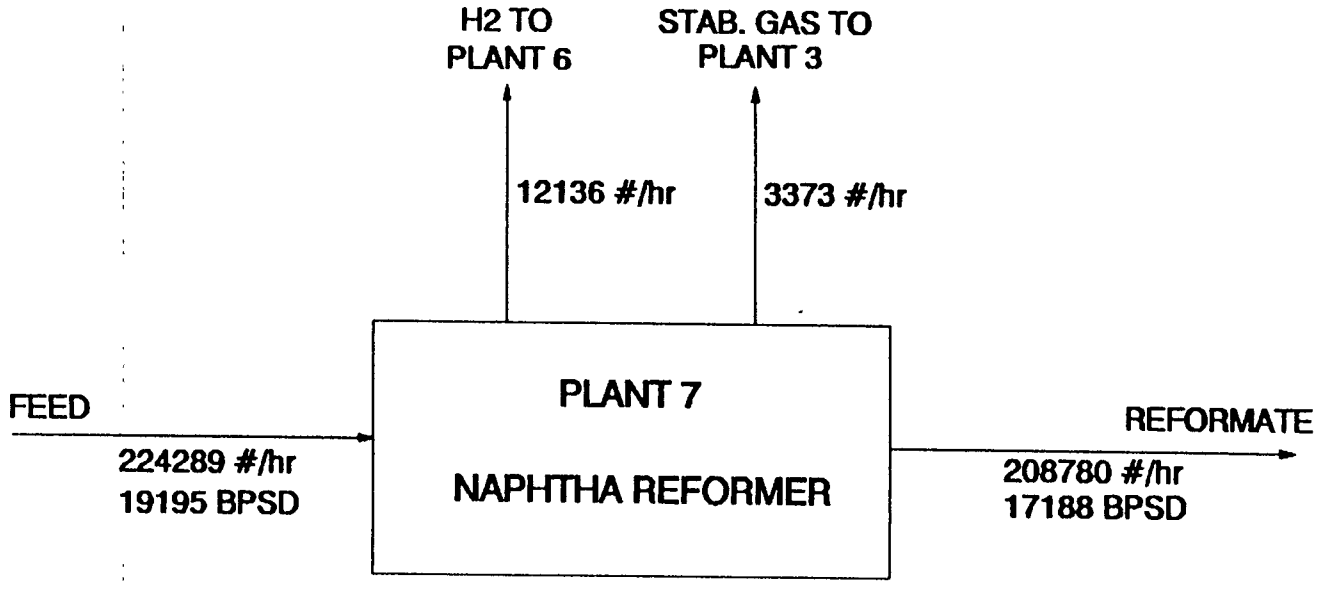

FIGURE 8.3

OVERALL MATERIAL BALANCE OF NAPHTHA REFORMER (PLANT 7)

NAPHTHA REFORMING OPTION

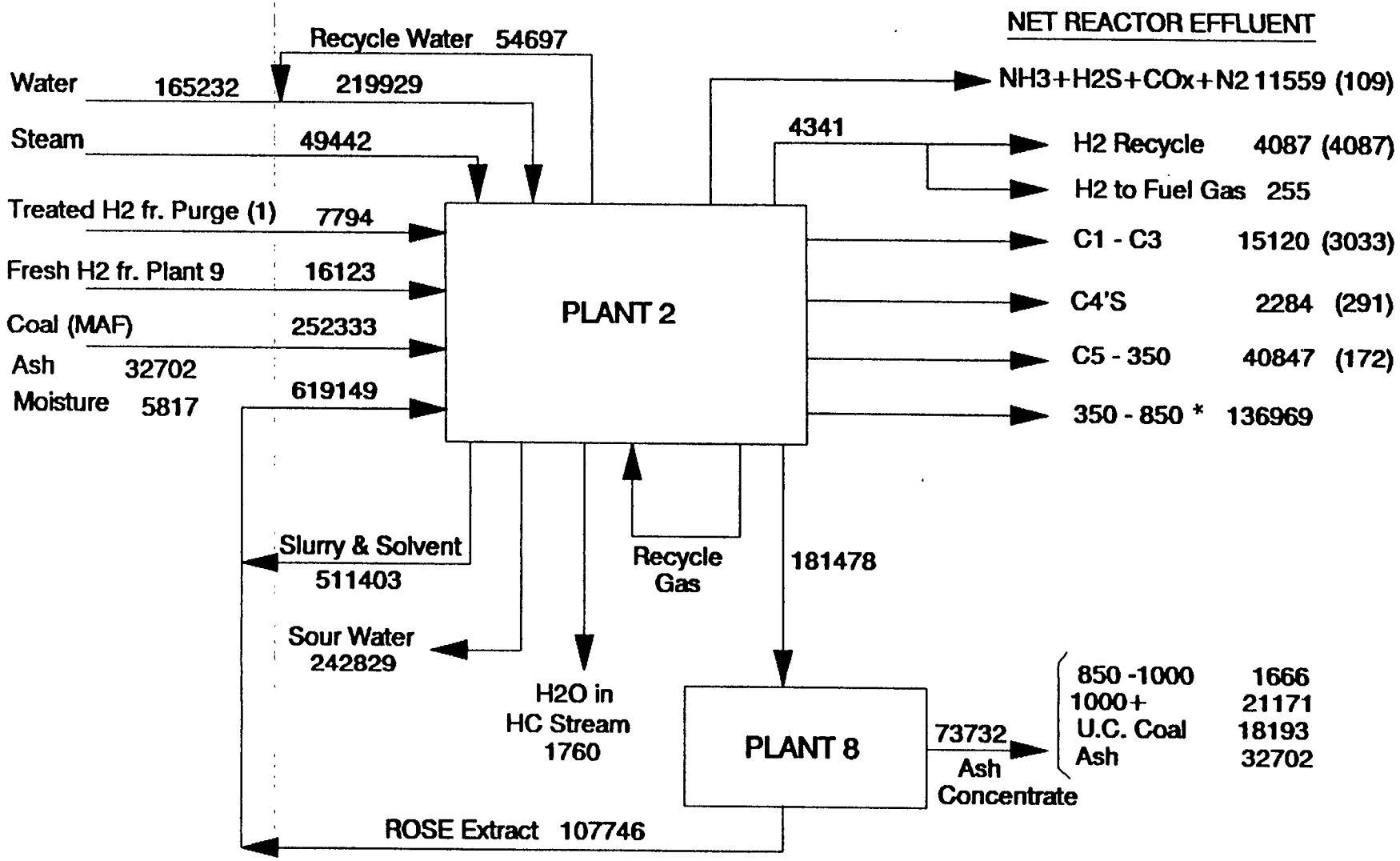

NOTES: . Flow rate in lbs/hr
. Number in parenthesis is due to input stream (1). Therefore, to calculate the % yield subtract out the corresponding number in parenthesis.
. Th HC's in sour water are shown in net reactor fflu nt.
* 350-850 fraction includes phenols

FIGURE 8.4 **OVERALL MATERIAL BALANCE PER TRAIN OF COAL LIQUEFACTION PLANT (PLANT 2)**

8.4 Utility Summary for the Dir ctly Affected Plant

The utility requirement for the directly affected plant (Plant 7) is shown in Table 8.1.

TABLE 8.1

Utility Summary for Plant 7

Steam, 600 psig superheated, lbs/hr	-70,600
Cooling water, gpm	462
Electricity, KW	508
Fuel Gas, MMBtu/hr	318

8.5 Ov rall Impact

The overall impact on the entire complex due to the inclusion of Naphtha Reformer (Plant 7) has been quantified based on the throughput adjustments to all the indirectly affected plants. Such effects are included in this report in terms of overall plant configuration and overall material balance (Sub-section 8.5.1), overall utility summary (Sub-section 8.5.2), overall water flow distribution (Sub-section 8.5.3) and overall hydrogen flow distribution (Sub-section 8.5.4).

8.5.1 Overall Plant Configuration and Overall Material Balance

The overall plant configuration and overall material balance for this option are shown in the same figure, Figure 8.5.

8.5.2 Overall Utility Summary

The overall utility summary for this option is shown in Table 8.2. Overall steam balance for Plant 31 (Steam and Power Generation Plant) is shown in Table 8.3.

8.5.3 Overall Water Flow Distribution

The overall water flow distribution for the entire complex is shown in Figure 8.6.

8.5.4 Overall Hydrogen Flow Distribution

The overall hydrogen flow distribution for the entire complex is shown in Figure 8.7.

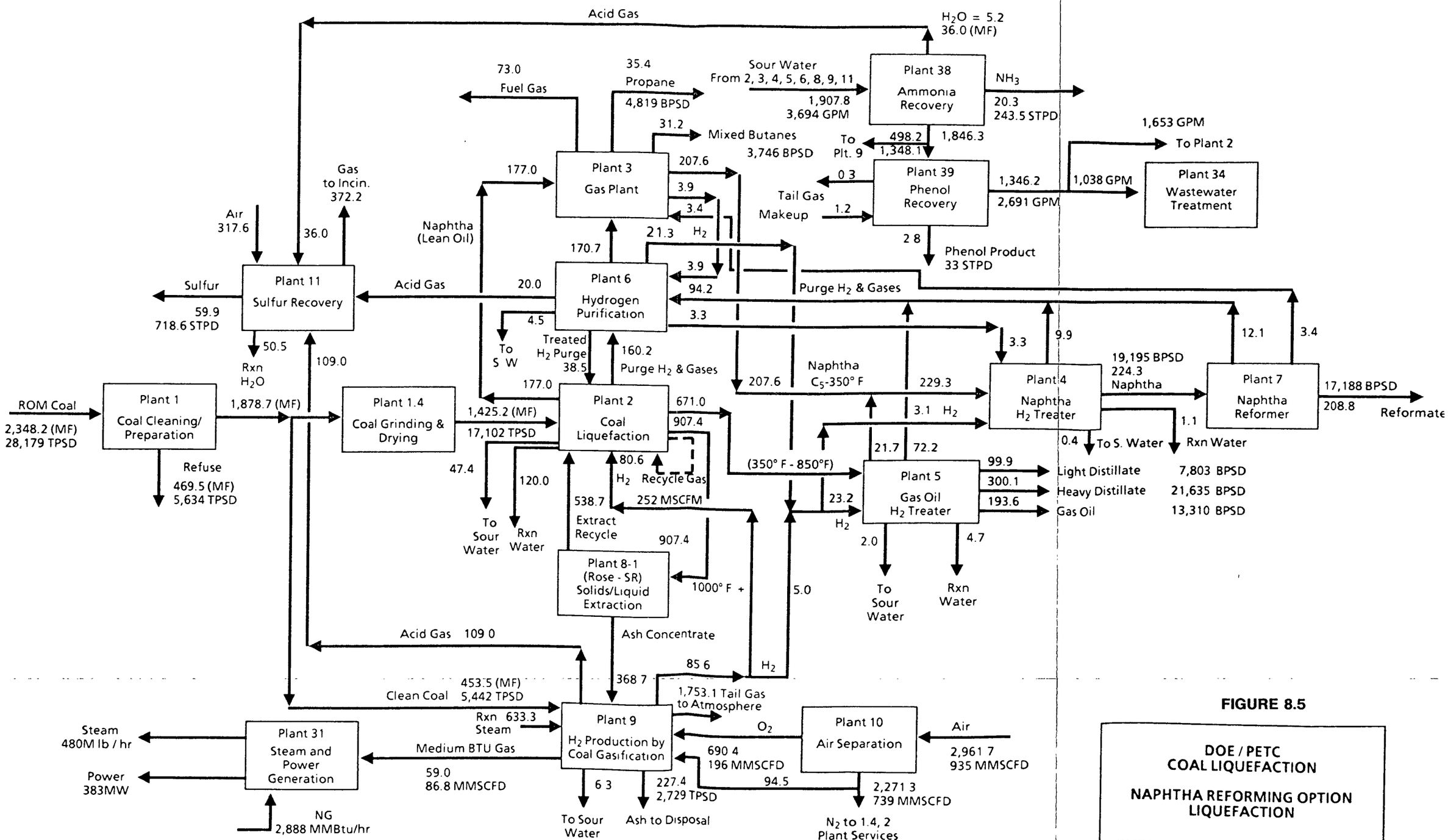

Revised 11/26/91

1291048-2

Notes:

1. Flow rates are in MLB/HR unless noted and on dry basis
2. Minor streams including steam, water, sour water, and make-up amine are not shown on this diagram
3. Flow rates around plants #38, 39, 34 are shown on wet basis

FIGURE 8.5

DOE / PETC
COAL LIQUEFACTION

NAPHTHA REFORMING OPTION
LIQUEFACTION

OVERALL PLANT CONFIGURATION
AND
OVERALL MATERIAL BALANCE

TABLE 8.2

30-Dec-91

OVERALL UTILITY SUMMARY
COAL LIQUEFACTION – NAPHTHA REFORMING OPTION

Plant No.	PLANT NAME	Fuel Gas MMbtu/hr	Electric Power KW	Steam Psig, Lb/hr 600 Sup @720 F	600 @489 F	150 @366 F	50 @298 F	Cond/BFW Net Cons lb/hr	Cooling Water gpm	Sour Water gpm	Waste Water gpm	Makeup Water gpm	Air scfm	Nitrogen scfm
	PROCESSING UNITS													
1	Coal Cleaning and Handling		8,289								762			
1.4	Coal Griding and Drying	486	12,114						240				5,956	75,063
2	Coal Liquefaction	1,090	58,988	5,565	(149,090)	(90,095)	56,115	424,715	8,095	(2,428)				715
3	Gas Plant	(1,555)	971		421,795		18,277	(440,072)	23,349	(5)				
4	Naphtha Hydrotreater	74	1,073		26,622			(26,622)	2,564	(40)		(38)		
5	Gas Oil Hydrotreater	162	2,179		65,048	(33,864)		(26,184)	8,228	(88)		(73)		
6	Hydrogen Purification		47,117				63,767	(63,767)	7,143	(70)		(60)		
7	Naphtha Reformer	318	508	(70,600)				70,600	462					
8	Critical Solvent Deashing	212	4,363			25,419				(51)				
9	H2 Purification by Coal Gasification	(906)	58,438		(269,769)	(705,301)	(722,312)	1,697,382	48,629	(893)	95	(1,110)		22,249
10	Air Seperation		147,914											(513,280)
11	By-product Sulfur Recovery	67	2,972		58,187	(181,038)	52,861	69,990	7,886	(120)				
ALL	Common Users			73000		40000	90000	(193,000)				(532)	9044	
	Sub Total (Process)	(52)	344,926	7,965	152,793	(944,879)	(441,292)	1,513,042	106,596	(3,695)	857	(1,813)	15,000	(415,253)
	OFFSITES													
19	Relief and Blowdown		19											
20	Tankage		6,758			22,000	3,300	(25,300)	100					
30	Electrical Distribution													
31	Steam and Power Generation	3,794	(382,752)	(480,296)		330,465	373,315	(511,113)	63,236		(311)	(886)		
32	Raw, Cooling and Potable Water Systems		13,341						(249,697)		(963)	11,708		
33	Fire Protection		44											
34	Sewage & Effluent Treatment		7,313				3,000	(3,000)				(963)		
35	Instrument & Plant Air Systems		2,894										(15,000)	
36	Purge and Flish Oil System		258											
37	Solid Waste Disposal		48								90			
38	Ammonia Recovery		1,501		319,538	569,657		(889,195)	75,286	3,695				
39	Phenol Recovery		815			22,757	61,677	(84,434)	4,479		(1,038)			
Other	Bldg 41,42, Light, Etc.		4835											
	Natural Gas Import d	(3,742)												
	Off Site BL and Evapration										1,365	(8,046)		
	Sub Total (Offsite)	52	(344,926)	(480,296)	319,538	944,879	441,292	(1,513,042)	(106,596)	3,695	(857)	1,813	(15,000)	0
	GRAND TOTAL	0	0	(472,331)	472,331	0	0	0	0	0	0	0	0	(415,253)

TABLE 8.3 OVERALL STEAM BALANCE FOR PLANT 31

STEAM AND POWER GENERATION PLANT

NAPHTHA REFORMING OPTION

DESCRIPTION PLANT NAME	PLANT NO.	STEAM PRODUCED lbs/hr	STEAM CONSUMED lbs/hr	CONDENSATE PRODUCED lbs/hr	COND (BFW) CONSUMED lbs/hr
600 PSIG @720°F (sup)					
Steam & Power	31	480,296	0	0	480,296
Naphtha Reformer	7	70600			70,600
Coal Liquefaction(1)	2	0	5,565	0	0
All Turbine Drives	ALL	0	73,000	73,000	0
Sub Total		550,896	78,565	73,000	550,896
L tdown 600(sup)/600 (3)		472,331			
600 PSIG @489°F (sat)					
Coal Liquefaction	2	149,090	0	0	149,090
Gas Plant	3	0	421,795	421,795	0
Naphtha Hydrotreater	4	0	26,622	26,622	0
Gas Oil Hydrotreater	5	0	65,048	65,048	0
Hydrogen Production	9	269,769	0	0	269,769
Sulfur Recovery	11	0	58,187	58,187	0
Phosam-W Ammonia Removal	38	0	319,538	319,538	0
Sub Total		418,859	891,190	891,190	418,859
150 PSIG @366°F(sat)					
Letdown 600/150					
Coal Liquefaction (1)	2	275,625	185,530	0	275,625
Gas Oil Hydrotreater(1)	5	38,864	5,000	0	38,864
Rose SR (1)	8	0	25,419	0	0
Hydrogen Production	9	751,526	46,225	46,225	751,526
Sulfur Recovery	11	181,038	0	0	181,038
Tanks warmup	20	0	22,000	22,000	0
Phosam-W Ammonia Removal	38	0	569,657	569,657	0
Phenol Removal	39	0	22,757	22,757	0
Stm Tracing	ALL	0	40,000	40,000	0
Sub Total		1,247,053	916,588	700,639	1,247,053
Surplus Stm to plt 31	31	330,465			
50 PSIG, 298°F(sat)					
L tdown 150/50					
Coal Liquefaction(1)	2	0	56,115	0	0
Gas Plant	3	0	18,277	18,277	0
Hydrogen Purification(1)	6	0	63,767	63,767	0
Hydrogen Production	9	826,781	104,469	104,469	826,781
Sulfur Recovery	11	62,946	115,807	115,807	62,946
Tanks warmup	20	0	3,300	3,300	0
Waste Water Treatment	34	0	3,000	3,000	0
Phenol Removal	39	0	61,677	61,677	0
Stm Tracing	ALL	0	80,000	80,000	0
Utility Stations (1)	ALL	0	10,000	0	0
Sub Total		889,727	516,412	450,297	889,727
Surplus Stm to plt 31	31	373,315			
Grand Total		3,106,535	2,402,755	2,115,126	3,106,535
Make-up Water(BFW), LBS/HR (2)					442,956
Make-up Water(BFW), GPM (2)		(Estimated 592 gpm)			886
Boiler Blowdown 5%		(Estimated 309 gpm)			311
Total Surplus Stm to plt 31					703,780

NOTES:

(1) Used by strippers, vac stm ejectors and/or fire heaters i.e steam lost.

(2) Consists of Condensate Make-up and Blowdown.

TABLE 8.3 CONTINUED OVERALL STEAM BALANCE

PLANT 31

STEAM AND POWER GENERATION PLANT

NAPHTHA REFORMING OPTION

DESCRIPTION	IMPORTED		EXPORTED	
	lbs/hr	GPM	lbs/hr	GPM
CONDENSATE				
600 Psig(sup. Heated)	73,000	146		
600 Psig	891,190	1,781	418,859	837
150 Psig	700,639	1,400	1,247,053	2,492
50 Psig	450,297	900	889,727	1,778
SUB TOTAL CONDENSATE	2,115,126	4,227	2,555,639	5,107
COND. MAKEUP WATER (Demi)	287,629	575		
STEAM				
600 Psig (sup. Heated)			550,896	1,101
150 PSIG STEAM (surplus)	330,465	660		
50 PSIG STEAM (surplus)	373,315	746		
SUBTOTAL STEAM	703,780	1,406	550,896	1,101
TOTAL (Balance)	3,106,535	6,208	3,106,535	6,208

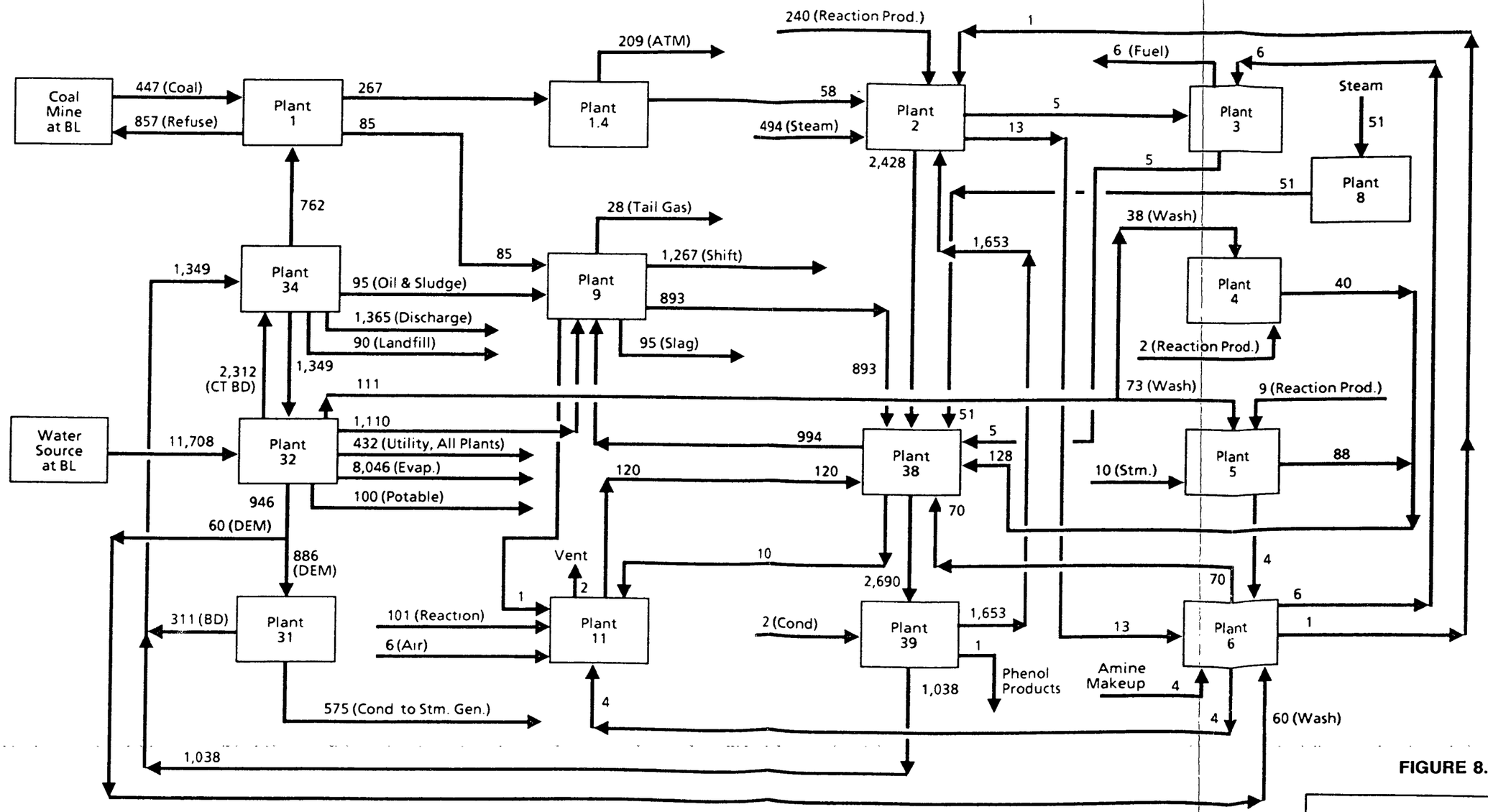

Notes:

1. Flows are for normal operation and in GPM

FIGURE 8.6

DOE / PETC
COAL LIQUEFACTION
NAPHTHA REFORMING OPTION

OVERALL WATER FLOW DISTRIBUTION

1091056-4

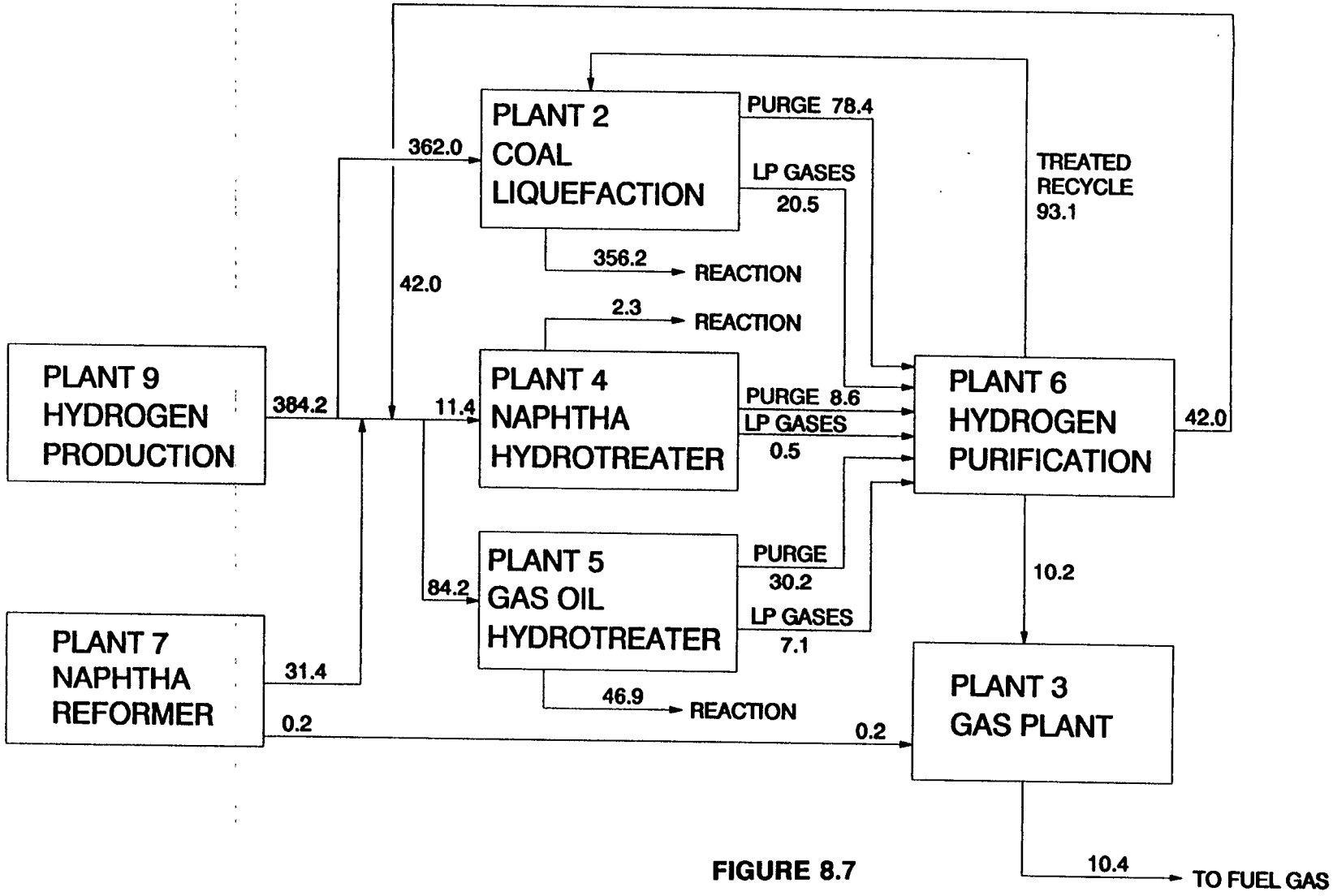

FIGURE 8.7

NOTES:
Hydrogen flow rates are in MMSCFD (Pure H2)

OVERALL HYDROGEN FLOW DISTRIBUTION

NAPHTHA REFORMING OPTION

H2_FLOW7.DRW 11/18/91