Making our planet more productive

Praxair's Oxygen Transport Membranes for Oxycombustion and Syngas Applications

NT43088

Sean M. Kelly, Director OTM R&D

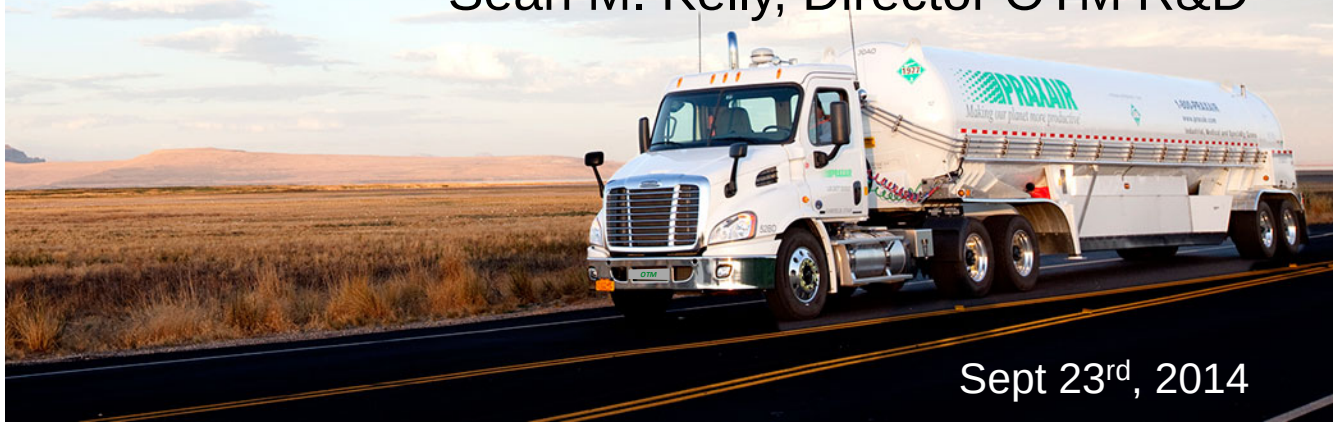

Sept 23rd, 2014

Praxair At A Glance

PRAXAIR
Making our planet more productive™

27,000 employees

in more than 50 countries

FORTUNE 100 COMPANY
market capitalization

MORE THAN 63,000 hours contributed to community engagement efforts benefitting 300,000 people

Applications enabled twice as many GHG emissions to be avoided as were emitted

CR Magazine's 100 Best Corporate Citizens List

$12B in sales

TOTAL SHAREHOLDER RETURN
143%
Over the past five years

SIXTH YEAR selected for the CDP's Carbon Disclosure Leadership Index

Selected for **DOW JONES Sustainability World Index** for Eleventh Consecutive Year

Praxair White Martins received the Best Innovator Award from A.T. Kearney for the 4th consecutive year

Presentation Outline

- OTM Technology Basics
- Process Integration for CCS
- Technology Development Progress
- OTM Power and CCS Vision

Praxair Oxygen Transport Membranes (OTM)

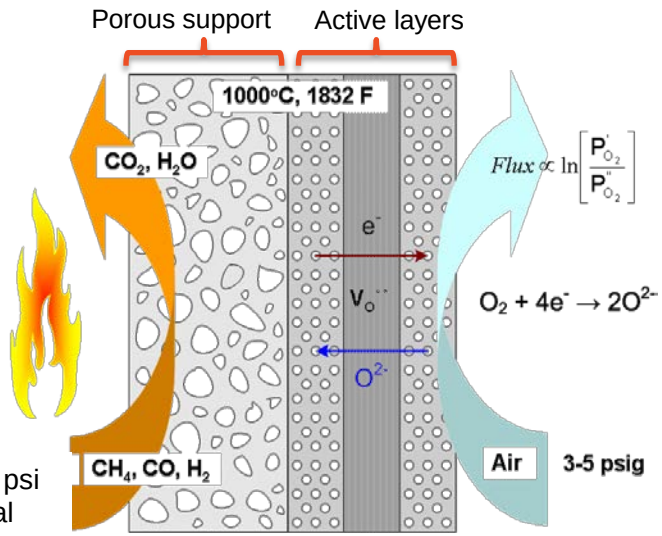

Ceramic Membrane Function

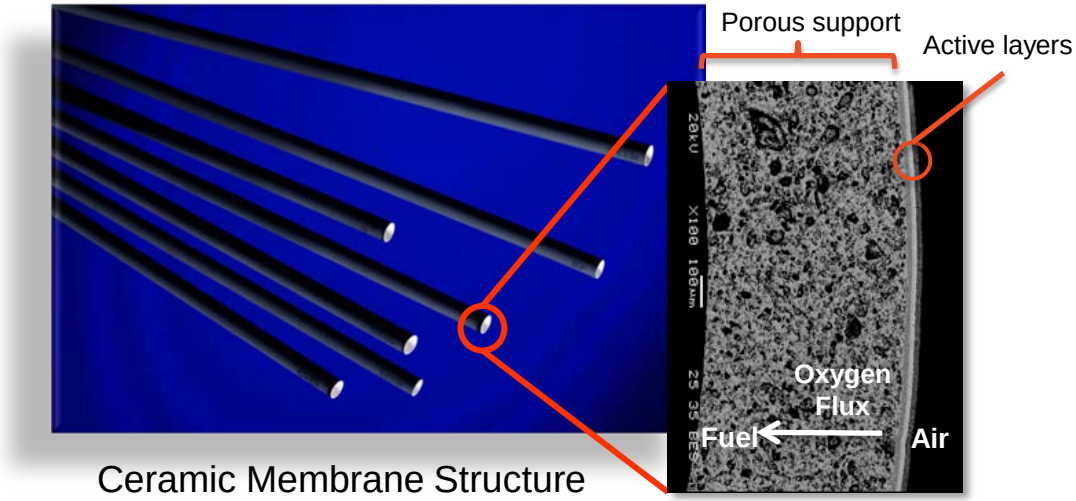

Ceramic Membrane Structure

Tube cross-section

Solid-state, perfect air separation and compression

OTM Process Thermal Integration

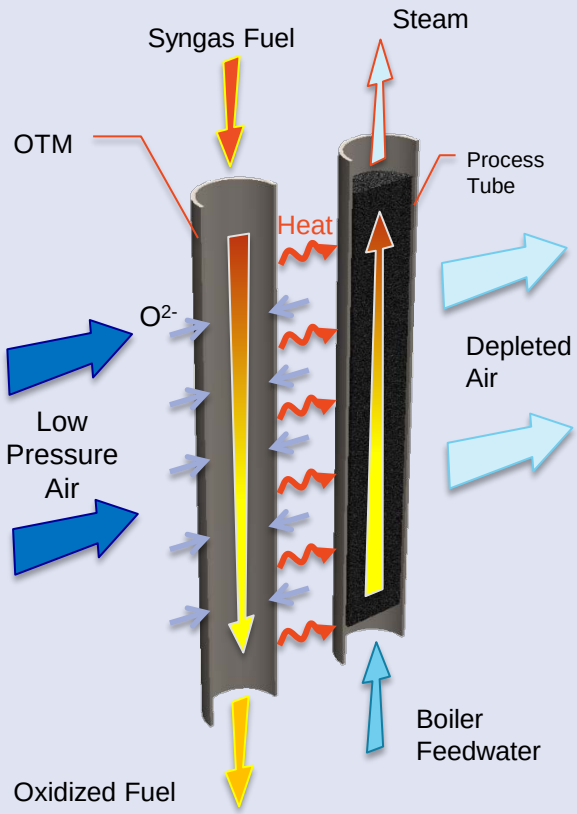

OTM Boiler

- Steam generation
- Enables power cycle w/CCS

US Patent Nos. 7,856,829 & 8,196,387

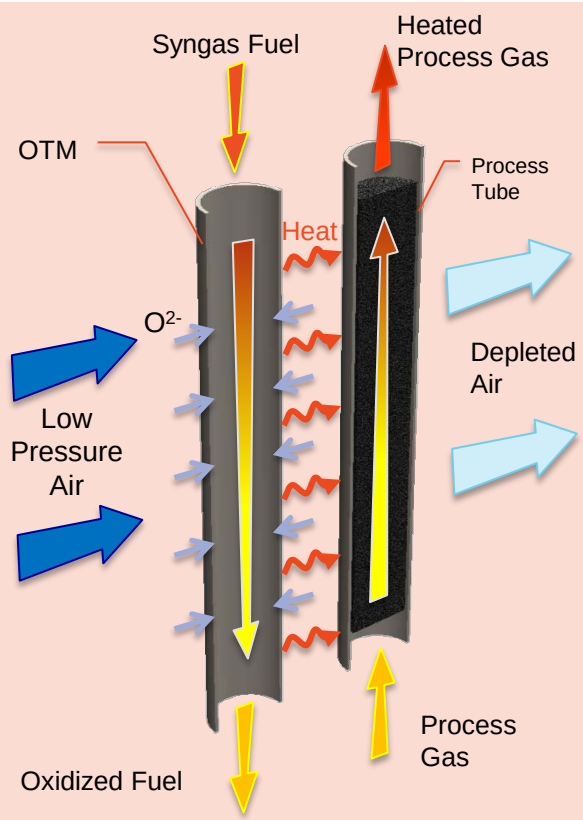

OTM Process Heater

- Process gas heating
- Enables oxycombustion power cycle w/CCS

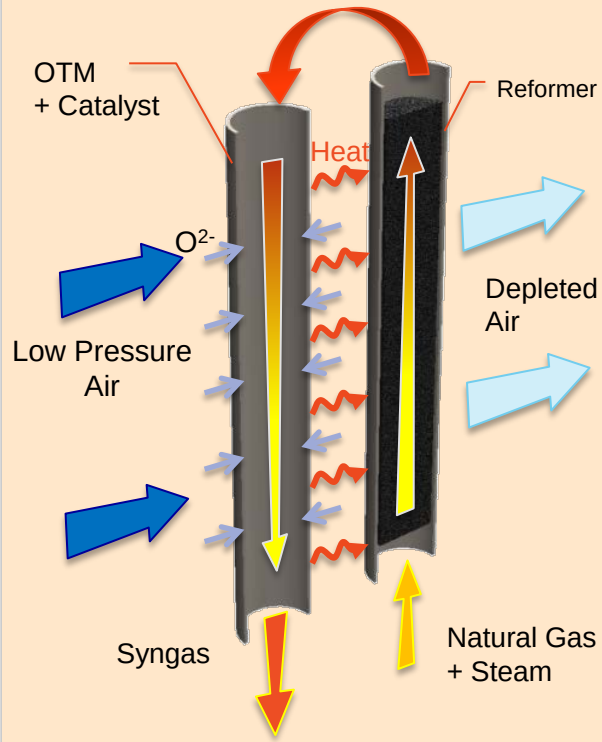

OTM Syngas

- Autothermal reforming of NG
- Enables downstream synthesis
- Enables NG oxycombustion power cycle w/CCS

US Patent Nos. 8,349,214

High temperature processes with integrated air separation

Praxair's Advanced Power Cycle

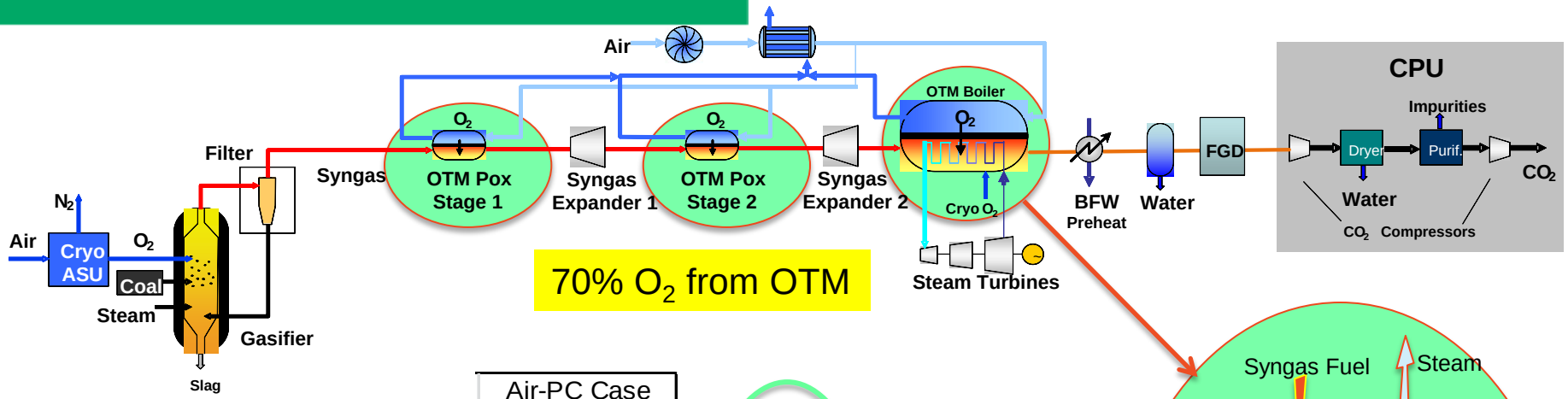

70% O_2 from OTM

Case		Air-PC Case Praxair/DOE No CCS SC	1 Main	
Net Efficiency		39.7	38.2	
Cost Basis (year)		3/2008	3/2008	
Plant Cost ($/kW)		$1,908	$3,712	
	Coal Price ($/MMbtu)			$/ton CO_2 captured
Increase in COE over Reference	1.8		42.1%	**$37.66**
	3		36.4%	**$38.23**
	4		32.8%	**$38.68**

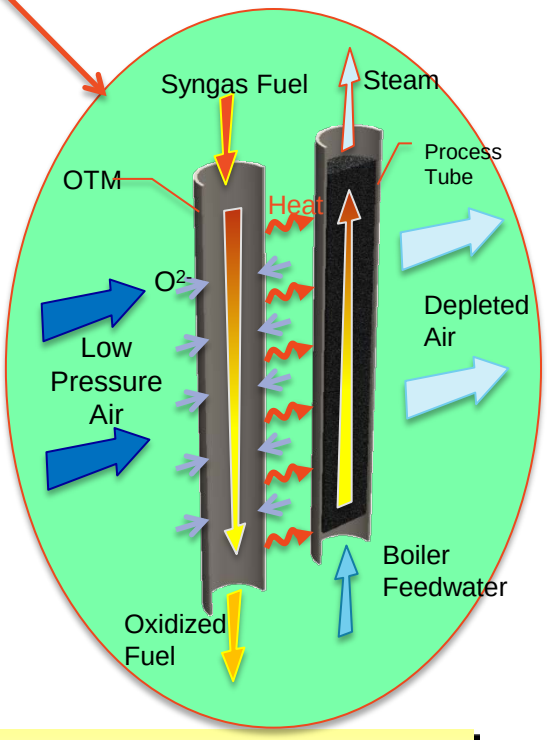

- Achievable goal of < 35% increase COE w/CCS
- < $40/ton CO_2 removed

OTM technology enables economic utility scale power with CCS

IGCC Integration Concept

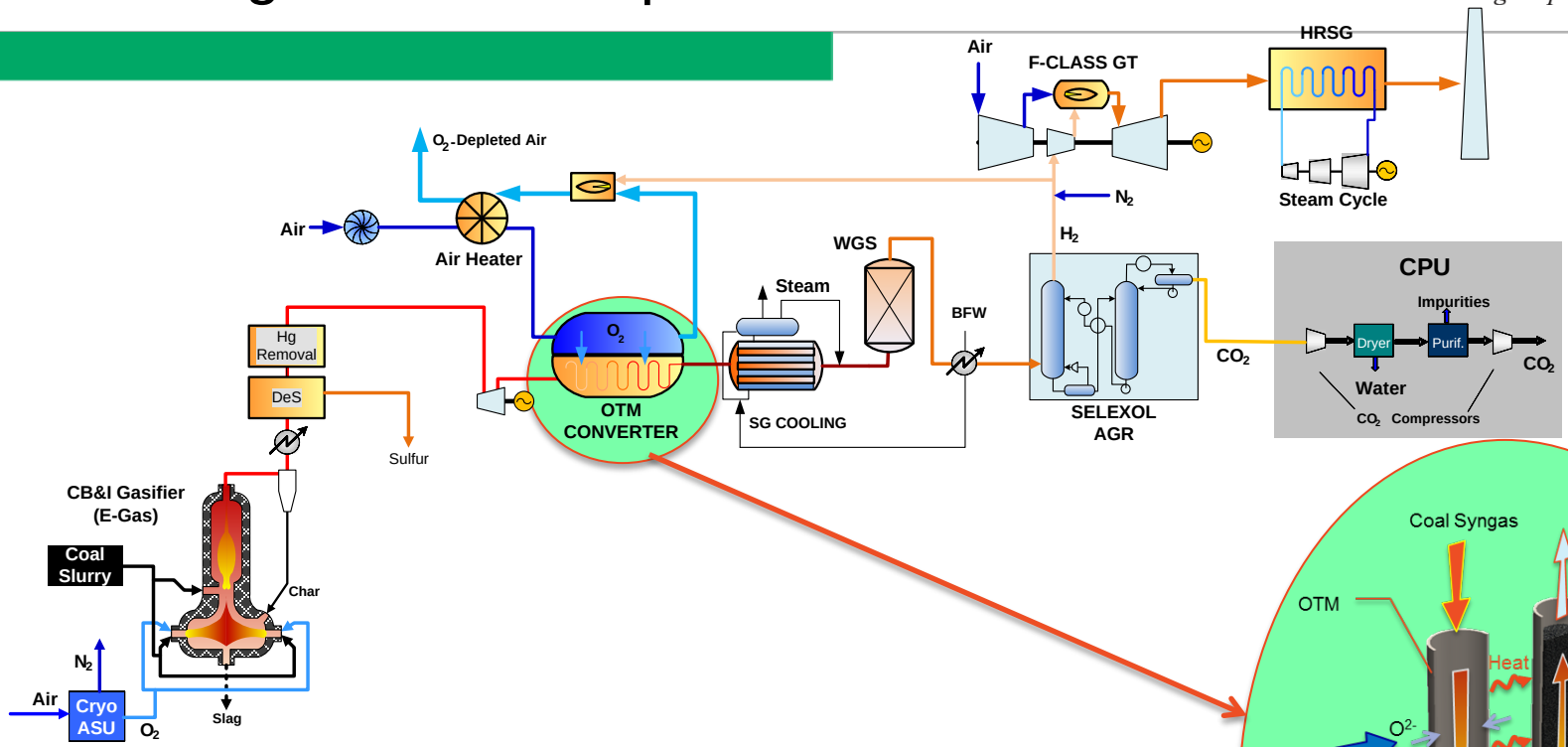

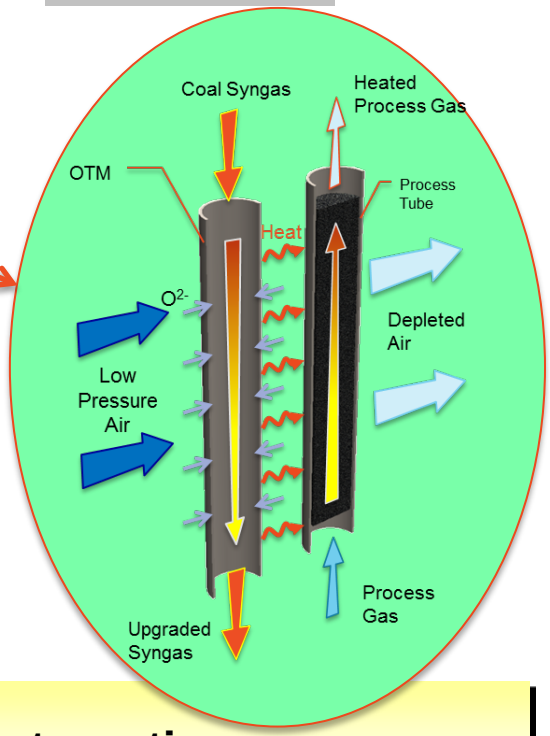

OTM-Enhanced IGCC

- Reduce Cryo O_2
- Increase carbon conversion to CO
- Process gas:
  - Raising process steam
  - Gas reheating (ahead of expander)

Syngas optimization through series OTM integration

IGCC Integration Concept (NG+Coal)

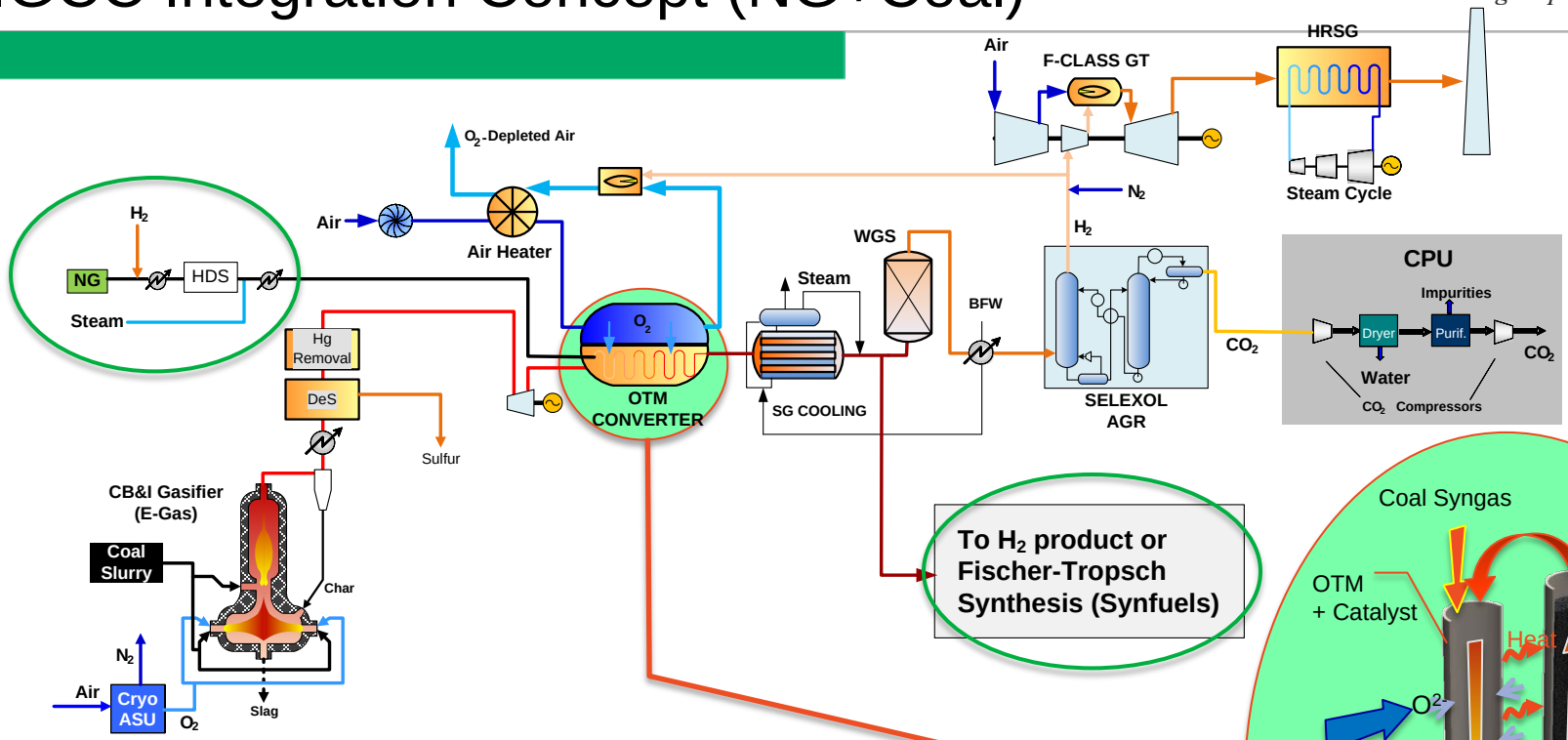

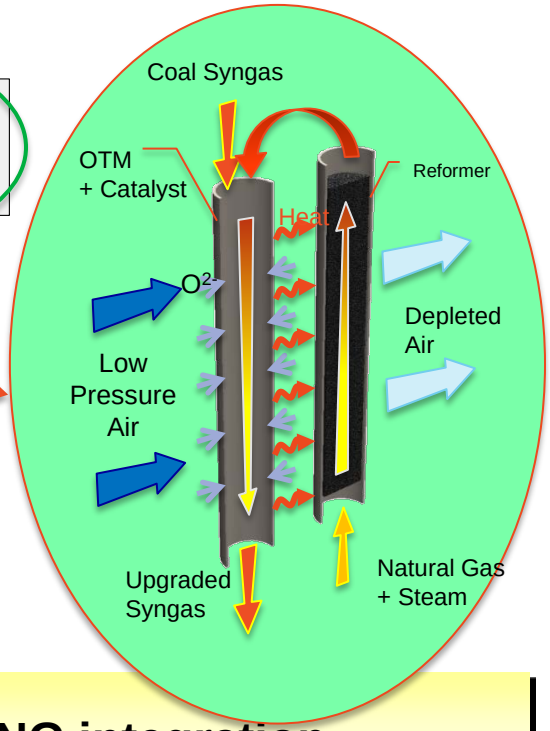

- **OTM-Enhanced IG/NGCC + Coal-to-Liquids**
  - Further reduce Cryo O_2
  - Reduced carbon footprint
  - Increased efficiency
  - Improved syngas for liquids synthesis
  - Coal + NG utilization with proven capture technology

Syngas optimization through series OTM and NG integration

OTM Advanced Power Cycle (APC):

PRAXAIR
Making our planet more productive™

Coal APC

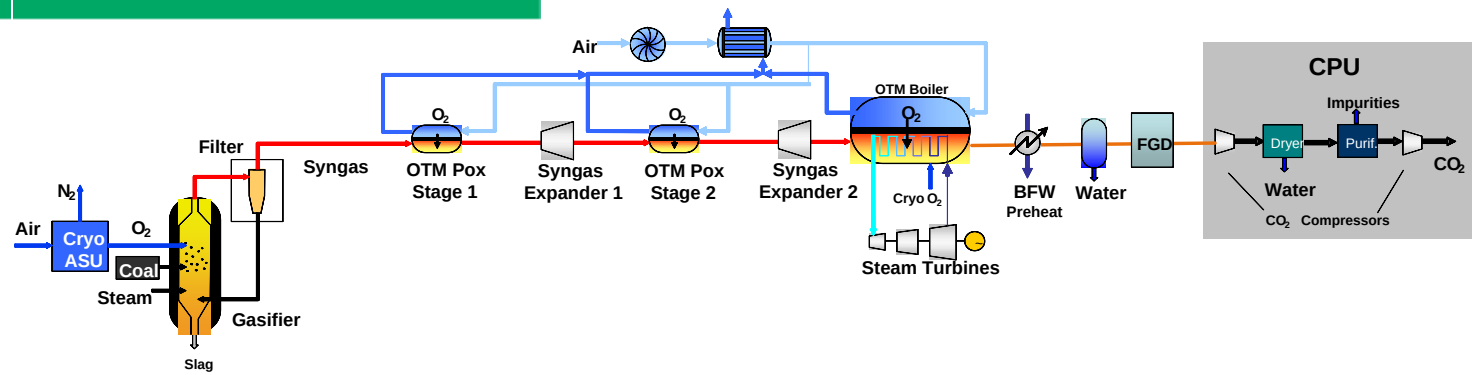

NG+Coal APC

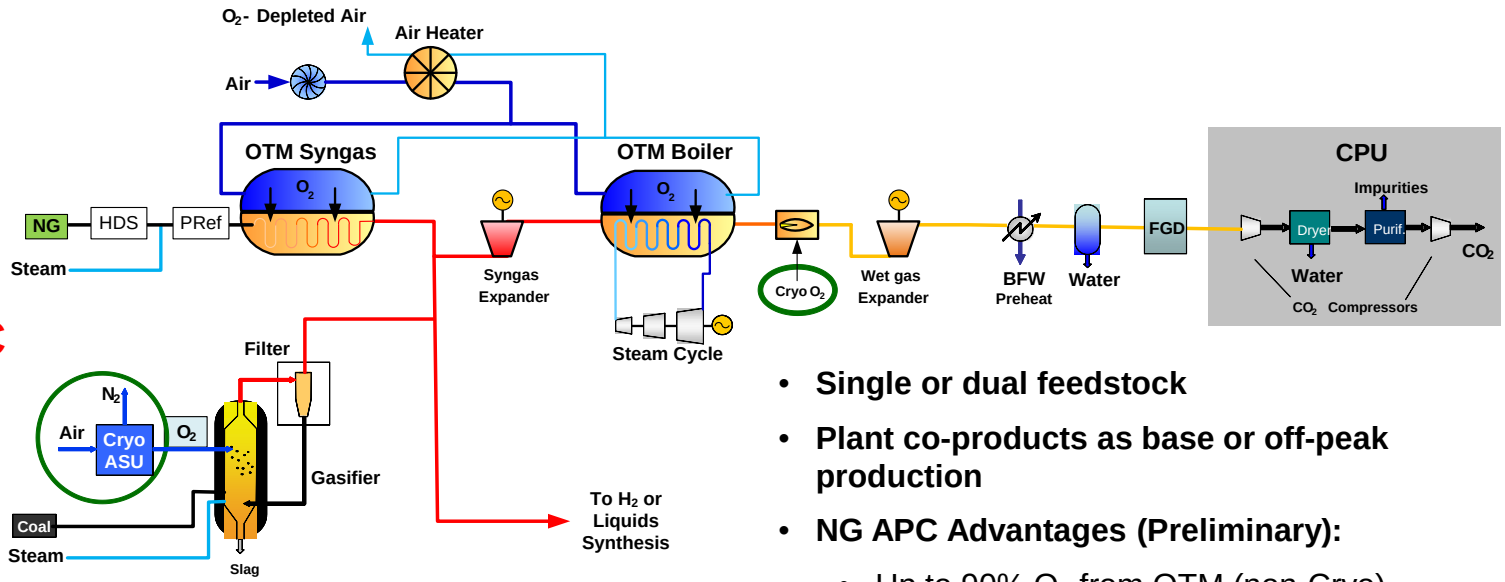

- **Single or dual feedstock**
- **Plant co-products as base or off-peak production**
- **NG APC Advantages (Preliminary):**
  - Up to 90% O_2 from OTM (non-Cryo)
  - Up to 50% less CO_2 produced and 97+% CO_2 capture
  - 5 point efficiency increase over NGCC

Technology Development- Membrane

Gen.1 Membrane

- 2X increase in O_2 flux
- 4X increase in creep life
- 10X reduction in degradation

Gen.2 Membrane

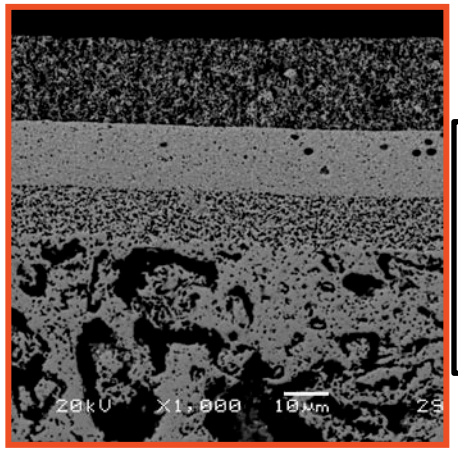

- Homogenous substrate
- Simplified, stable chemistry
- Thermal/chemical compatibility
- Improved manufacturing process

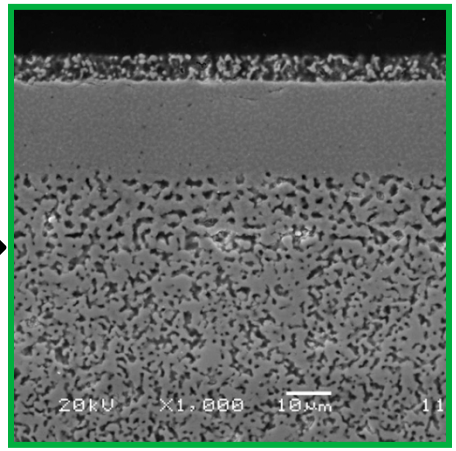

Membranes achieve early commercialization targets

OTM Performance Advancements

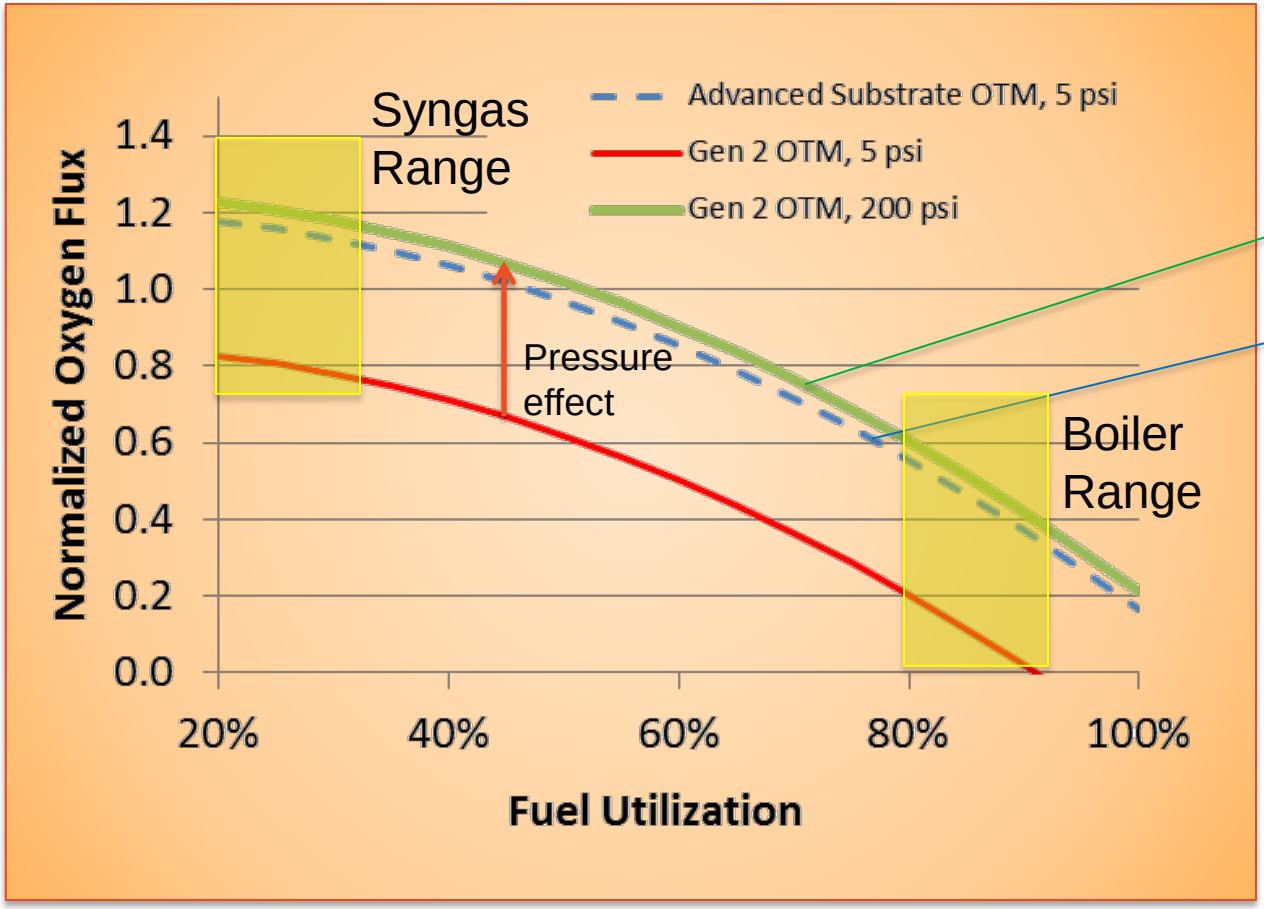

Gen 2 (2014)

Advanced Substrate (2010)

Praxair OTM: robust, manufacturable, scalable, and high performance

Saint-Gobain Ceramics Manufacturing

- 43.2B € Revenue (2012)
  - Experienced world class ceramic manufacturer
- Competencies in critical areas:
  - Ceramic powder manufacturing
  - Industrial ceramic component manufacturing
  - SOFC development experience
- Phase III Development Subcontract
  - Currently supplying membranes, seals, and ceramic subassemblies

Sealed OTM assemblies

Saint-Gobain Furnace Investment

Focus on high-volume ceramics meeting cost targets

Test Systems Developed in Current Phase

PRAXAIR
Making our planet more productive™

Single Tube Testing → Module Testing → System Testing

Membranes can deliver requirements of the process

- Flux and fuel conversion demonstrated
- >20,000 hrs over 25 tubes
- Focus on Gen 2 membrane characterization at high pressure

Modules have shown excellent operational flexibility

- 13 Modules tested (>200 OTM tubes)
- More than 4,700 hrs of flux testing
- >25 module thermal cycles
- Ceramics robust to thermal and chemical cycling

Successful multi-module syngas production (radial modules)

- Operating with 5 radial modules (60 OTM tubes)
- Representative commercial process elements
- Multiple successful heating / cooling cycles
- Capacity up to 190 Nm^3/hr syngas

Successful integration of membranes into systems

Panel Array Operation

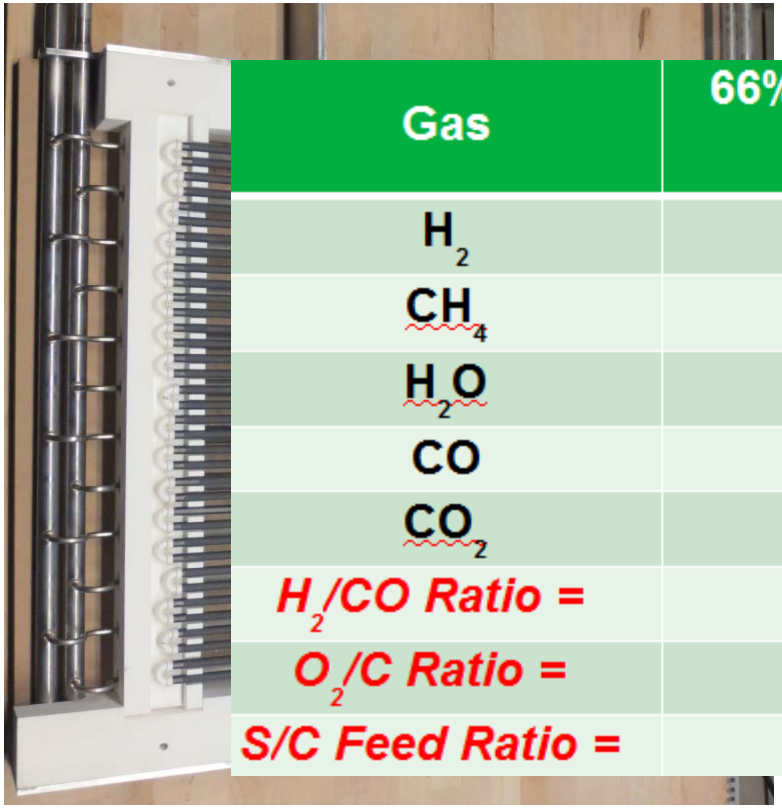

Gas	66% NG + 34% CO_2 Feed	100% NG Feed
H_2	55.7%	70.5%
CH_4	0.04%	0.13%
H_2O	0.00%	1.60%
CO	26.3%	21.6%
CO_2	17.9%	6.20%
H_2/CO Ratio =	*~ 2.12*	*~ 3.26*
O_2/C Ratio =	*~ 0.4*	*~ 0.38*
S/C Feed Ratio =	*~ 1.5*	

Syngas module robust to thermal cycles, trips, and transients

Boiler Design Advancements

Tubesheet Boiler

- 10X unit capacity
- 45% increased duty/unit volume
- 40% increased O_2/unit volume
- reduced capital cost

Panel Array Boiler

- Adopt panel array design
- Increase syngas pressure
- Increased module capacity

0.85 $TPDO_2/m^3$

135 $kWth/m^3$

7.5 MW_{th}

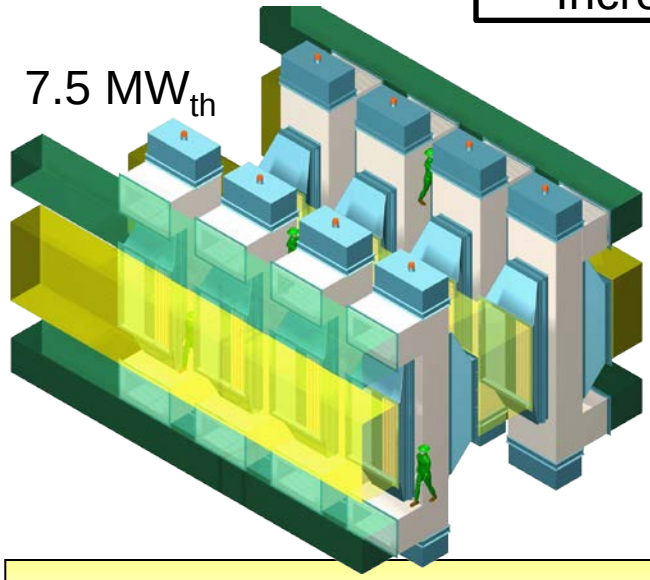

20-50 MW_{th}

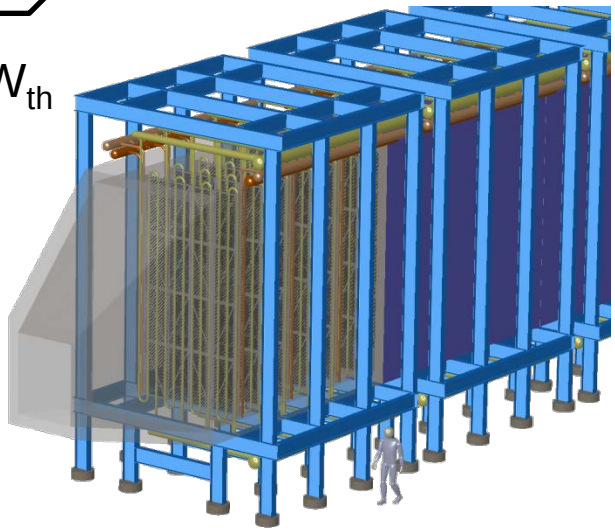

Improved approach to large-scale power boiler

Acknowledgements

This material is based upon work supported by the Department of Energy under Award Number DE-FE26-07NT43088. Neither the United States Government nor any agency thereof, nor any of their employees, makes any warranty, express or implied, or assumes any legal liability or responsibility for the accuracy, completeness, or usefulness of any information, apparatus, product, or process disclosed, or represents that its use would not infringe privately owned rights. Reference herein to any specific commercial product, process, or service by trade name, trademark, manufacturer, or otherwise does not necessarily constitute or imply its endorsement, recommendation, or favoring by the United States Government or any agency thereof. The views and options of authors expressed herein do not necessarily state or reflect those of the United States government or any Agency thereof.

.

Thank you!