Final Report

Title: Low Cost Sorbent for Capturing CO_2 Emissions Generated by Existing Coal-fired Power Plants

Contractor: TDA Research, Inc.
12345 W. 52nd Avenue
Wheat Ridge, CO 80033-1916

Principal Investigator: Dr. Jeannine E. Elliott

Sponsor: Department of Energy

Contract DE-NT0005497

Contract Specialist: Ashley E. Reischl
U.S. Department of Energy
Acquisition & Assistance Division
626 Cochrans Mill Road, P.O. Box 10940
Pittsburgh, PA 15236
412-386-4857
Ashley.Scekeres@netl.doe.gov

Technical Monitor: B. Andrew O'Palko
U.S. DOE – NETL
3610 Collins Ferry Road
P.O. Box 880
Morgantown, WV 26507-0880
304-285-4715
Andrew.Opalko@NETL.DOE.GOV

Reporting Period: November 1, 2008 to August 30, 2013

.

Low Cost Sorbent for Capturing CO_2 Emissions Generated by Existing Coal-fired Power Plants

Final Report

Dr. Jeannine Elliott
Dr. Robert Copeland

TDA Research, Inc.
12345 W. 52nd Avenue
Wheat Ridge, CO 80033-1916
(303) 422-7819

November 15, 2013

Table of Contents

Table of Tables 6
Executive Summary 7
1 Introduction 12
2 TDA's Sorbent Post Combustion CO_2 Capture 12
3 Project Objectives 15
4 Results 16
4.1 Laboratory testing 16
4.1.1 TGA Testing 16
4.1.2 Fixed Bed Evaluation 17
4.1.3 Summary of Laboratory Fixed Testing 22
4.2 Bench-scale Testing 22
4.2.1 Multiple Fixed Beds in Series Design 23
4.2.2 Bench-scale System Description 24
4.2.3 Sorbent Production for Bench-scale unit 27
4.2.4 Bench-scale testing at TDA 28
Evaluation at 80% and 70% CO_2 Capture Rates 31
4.2.5 Field Testing 34
4.2.6 Summary of Bench-scale testing 40
4.3 Process and Sorbent Advancement 41
4.3.1 Process Modifications 41
4.3.2 Process Evaluation 43
4.3.3 Sorbent Improvement 45
4.3.4 Summary on Process and Sorbent Advancement 46
4.4 Reactor Bed Design 47
4.5 System and technical economic analysis 48
4.5.1 Analysis with retrofit of existing subcritical power plant 48
Overall Heat and Material Balance for 433.7 MW subcritical plant 48
4.5.2 Preliminary analysis with 550 MW Greenfield plant 55
4.6 Summary of system and process economics 56
4.7 Conclusion and Recommendations 57
4.8 Recommendations for Future Work 58

Table of Figures

Figure 1 TDA 300cc fixed bed testing apparatus 8
Figure 2. Multiple fixed bed in series sorbent testing apparatus 8
Figure 3. Multiple fixed beds in series. 8 bed apparatus as initially constructed 8
Figure 4. Production of TDA's Adsorbent at pilot plant at TDA 9
Figure 5. TDA's Bench-scale CO_2 capture apparatus at WRI during field test 9
Figure 6. Field test results using coal-derived flue gas 9
Figure 7. TDA's CO_2 capture system on existing coal plant (drawing modified from DOE/NETL-401/110907) 13
Figure 8. TDA's CO_2 emission control system 14
Figure 9. Schematic of sorbent circulation with counter current flow. 14
Figure 10. Isotherm data on TDA baseline sorbent used in field testing 15
Figure 11. PI&D of Fixed Bed Testing Apparatus 17
Figure 12 TDA 300cc fixed bed testing apparatus 18
Figure 13. The effect of moisture in simulated combustion flue gas (13.8% CO_2) on the CO_2 loading of alkalized alumina adsorbent. The loading level is normalized to the loading at 0% humidity 19
Figure 14. CO_2 loading measured periodically between cycling with 822 ppm NO_x 20
Figure 15. Long term cycling under simulated flue gas, 13.8% CO_2, 8% H_2O and 104 ppm SO_2 21
Figure 16. Projected cycling performance with 5 ppm of SO_2 for 1 year. 22
Figure 17. Multiple fixed beds in series. 8 bed apparatus as initially constructed 23
Figure 18. Multiple fixed bed in series sorbent testing apparatus 24
Figure 19. Multiple fixed beds in series apparatus in operation with a heated box around beds. 25
Figure 20. P&ID Sheet 1, Gas Feed Control. 26
Figure 21. P&ID Sheet 2, Sorbent Beds 26
Figure 22. P&ID Sheet 3, Outlet Gas Analysis & Venting. 27
Figure 23. Production of TDA's Adsorbent 27
Figure 24. Capture rate during extended cycling test at TDA under simulated conditions 13% CO_2 and 6% H_2O. 5/23 to 5/28/2012. 29
Figure 25. Sorbent loading during extended cycling test at TDA under simulated conditions 13% CO_2 and 6% H_2O. 5/23 to 5/28/2012 29
Figure 26. Inlet and outlet gas composition on flue side in multiple fixed bed apparatus during Day 5 of extended test at TDA. Flue feed gas was 13.1% CO2 and 6% H2O. 110 sec cycles. 5/28/2012 – 90% Capture 30
Figure 27. Percent CO_2 in regeneration outlet in multiple fixed bed apparatus during Day 5 of extended test at TDA. 110 sec cycles, 5/28/2012 – 90% Capture 30
Figure 28. Inlet and outlet gas composition on flue side in multiple fixed bed apparatus for 80% 31
Figure 29. Percent CO_2 in regeneration outlet in multiple fixed bed apparatus for 80% Capture. Flue feed gas was 16.3% CO_2 and 5.5% H_2O.75 sec cycles, 8/9/2012 32
Figure 30. Inlet and outlet gas composition on flue side in multiple fixed bed apparatus for 70% Capture. Flue feed gas was 13.0% CO_2 and 4.2% H_2O. 80 sec cycles. 8/23/2012 33
Figure 31. Percent CO_2 in regeneration outlet in multiple fixed bed apparatus for 70% Catpure . 105 sec cycles. Flue feed gas was 13.0% CO_2 and 4.2% H_2O. 80 sec cycles. 8/23/2012 33
Figure 32. Western Research Institute's Combustion Test Facility 34
Figure 33. Schematic of Combustion test facility at WRI 35

Figure 34. 8 Bed apparatus flow configuration as run in field testing. 3 adsorption beds, 4 regeneration beds, and 1 purge bed after regeneration before adsorption. Gases and solids move in counter flow direction ..... **Error! Bookmark not defined.**
Figure 35. TDA's Bench-scale CO_2 capture apparatus at WRI during field test 36
Figure 36. Extended cycling test at WRI with real coal derived flue gas 37
Figure 37. Inlet and outlet gas composition on flue side in multiple fixed bed apparatus during Day 5 of field test. Flue feed gas was 13.6% CO_2 and 6% H_2O. 105 sec cycles. 6/29/2012. 89% Capture 38
Figure 38. Percent CO_2 in regeneration outlet in multiple fixed bed apparatus during Day 5 of extended test at TDA. 105 sec cycles. 6/29/2012. 89% Capture 38
Figure 39. Inlet and outlet gas composition on flue side during Day 5 of field testing. Flue feed gas was 13.6% CO_2 and 6% H_2O. 135 sec cycles. 6/29/2012. 93% Capture 39
Figure 40. Percent CO_2 in regeneration outlet in multiple fixed bed apparatus during Day 5 of extended test at TDA. 135 sec cycles. 6/29/2012. 93% Capture 39
Figure 41. Multiple fixed beds in series. 8 bed apparatus as initially constructed 41
Figure 42. 8 Bed flow pattern with 3 adsorber bed in parallel flow and 5 regeneration bed in series flow. Adsorption feed (down) is counter flow with regeneration feed (up) 41
Figure 43. Installation of new 600 cc fixed beds (2.87" ID 5.5" bed length) with 5.7 L/D aspect ratio compared to previous beds (2.01" ID 11.5" bed length) with 1.9 aspect ratio in 8 bed apparatus. 42
Figure 44. Steam Saver where bed that just transfer from regeneration to adsorption is purged with flue gas and recycle back to regeneration side at the beginning of the cycle. 43
Figure 45. Mass spectrometer measurement of top of reactor bed. During adsorption it measure the flue gas feed and during regeneration it measure the regeneration outlet and concentration during in regeneration bed during stripping 44
Figure 46. Fixed bed cycling of M-05 sorbent under simulated flue gas 13% CO_2, 8% H_2O) at 180 °C with steam regeneration 45
Figure 47. CO_2 loading capacity new sorbents (M-02 through M-06) and TDA's previous baseline formulation (GG1002-6) 45
Figure 48. Impact of superficial gas velocity on breakthrough (left) and regeneration rates (right) 46
Figure 49. Isotherms for improved sorbent 46
Figure 50. TDA's CO_2 capture process using counter-current moving beds (Stevens 2012) 47
Figure 51. Rotating wheel bed designs 47
Figure 52. Gas Side Process Flow Diagram – Conesville #5 (Ramezan 2008) 49
Figure 53. Process flow diagram with CO_2 capture and compression 50
Figure 54. Plant layout of TDA's CO_2 adsorber-desorber system 51

Table of Tables

Table 1. TGA screening tests on candidate sorbent formulations 16
Table 2. Evaluation after field testing 40
Table 3. Key Parameters: Comparison of published Conesville #5 plant with model no capture case (Base Case) 50
Table 4. B&W Sensitivity Analysis on Plant Performance as function of Regeneration System Requirement based on retrofitting Conesville #5 subcritical PC plant 52
Table 5. B&W Sensitivity Analysis on Steam Regeneration Requirement on cost of CO_2 capture based on retrofitting Conesville #5 subcritical PC plant 53
Table 6. B&W Sensitivity Analysis on Space Velocity on cost of CO_2 capture based on retrofitting Conesville #5 subcritical PC plant 54
Table 7. Power requirements for TDA's CO_2 capture system with greenfield supercritical CO_2 plant. 55
Table 8. Cost of TDA process compared to Case 11 &12 in DOE/2010/1397, Black 2010 56

Executive Summary

TDA Research, Inc. has developed a novel sorbent based post-combustion CO_2 removal technology. This low cost sorbent can be regenerated with low-pressure (ca. 1 atm) superheated steam without temperature swing or pressure-swing. The isothermal and isobaric operation is a unique and advantageous feature of this process. The objective of this project was to demonstrate the technical and economic merit of this sorbent based CO_2 capture approach. Through laboratory, bench-scale and field testing we demonstrated that this technology can effectively and efficiently capture CO_2 produced at an existing pulverized coal power plants. TDA Research, Inc is developing both the solid sorbent and the process designed around that material. This project addresses the DOE Program Goal to develop a capture technology that can be added to an existing or new coal fired power plant, and can capture 90% of the CO_2 produced with the lowest possible increase in the cost of energy. .

TDA's process is based on low-cost, dry solid sorbent that has a long cyclic life. The sorbent is a regenerable, dry alkalized alumina. CO_2 adsorbs on the alkali surface sites. This material is very low cost because it is made from inexpensive raw materials with simple processing. Cost is very important in this application because tremendous quantities of sorbent will be required to remove CO_2 from the flue gas of power plants, since there is simply so much coal-fired power plant flue gas produced. Approximately 10,000 tons/day of CO_2 is produced by just one 500 MW power plant and there are 300 GW ($3x10^5$ MW) of power plants in the U.S (the equivalent of 600 500 MW plants). The heat of desorption for our sorbent is 3-10 kcal/mole (depending on the conditions), which is much lower than that for either chemical absorbents such as sodium carbonate (29.9 kcal/mole) or amine-based solvents such as monoethanolamine (14.2 kcal/mole CO_2). As result, the amount of parasitic energy consumed by our CO_2 removal process is much lower than that for other processes, and the net energy efficiency of the power plant is higher

TDA's process is unique and tailored to the sorbent's characteristics. We use low pressure steam (~1 atm) for desorption, which is performed under near isothermal conditions (130-180°C, 266-356°F). This regeneration method is attractive because it does not require heating and cooling of solids or valuable high-pressure steam. Gas-solid exchangers are not very efficient and they are very expensive. This approach greatly simplifies the solids handling and thermal management. In contrast, most chemical absorbent (aqueous ammonia, carbonates, etc.) and solid adsorbents (Sjostrom 2010) proposed require temperature swing for regeneration. Conventional amines (MEA, Fluor economine) require temperature swings of 30-120°C, and need higher pressure steam to drive their regeneration (73.5 psia) (Black 2010). By using low pressure steam we can extract most of the energy from the steam before utilizing it in the regeneration process.

The first part of this project was focused on understanding and improving the sorbent. We screened sorbent compositions by TGA and evaluated promising formulation in our fixed bed apparatus. Our best sorbent was tested to evaluate the effect of flue gas composition, including how SOx and NOx influenced the sorbent cycling. TDA's sorbent was evaluated in a 300 cc packed bed under simulated flue gas and steam regeneration to measure its capacity (Figure 12). We observed that water in the flue gas does not significantly degrade its CO_2 capacity. We also measured the performance with simulated flue gas contaminants. Exposure to 739 ppm NO and 84 ppm NO_2 did not affect the sorbent's CO_2 capacity through 200 cycles. Typical flue gas contains about 0-140 ppm NO with 5-10% conversion of NO to NO_2; we chose to use

elevated NO and NO_2 levels to accelerate any possible sorbent degradation. The sorbent was evaluated in a extended cycling (1500 hours, which was 9300 cycles) with SO_2 in the simulated flue gas (13.8% CO_2, 9% H_2O, 77.2% N_2, 3% O_2, 104 ppm SO_2). The presence of oxygen in the flue gas allowed some of the SO_2 to convert to SO_3, as in an actual flue gas environment. We selected the SO_2 level at 104 ppm based on the flue gas composition at the Conesville #5 plant without a SO_2 scrubber (DOE/NETL-401/110907, Ramezan 2007). The extended test in the presence of SO_2 showed that our sorbent had a slow loss in capacity over time. However, at the end of the testing we demonstrated the sorbent could be reconditioned with a reducing gas, after which it regained its original CO_2 capacity. Under low sulfur flue gas conditions (5 ppm SO_2) we calculated that only annual replacement or reconditioning would be needed.

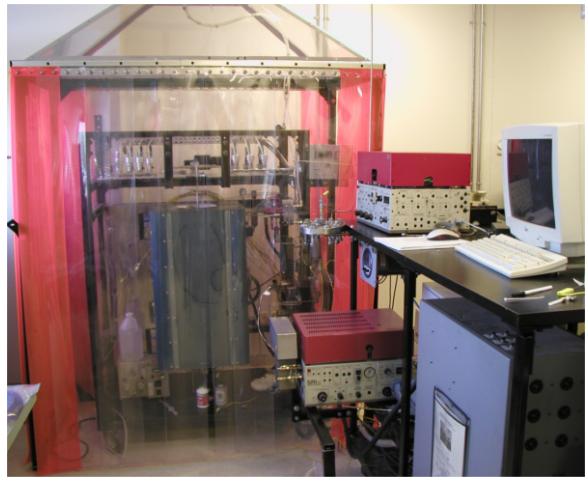

Figure 1. TDA 300cc fixed bed testing apparatus

To demonstrate closed loop continuous capture of CO_2, TDA built a bench-scale multiple fixed bed testing apparatus (Figure 3). This bench-scale apparatus consists of eight 2.87" ID by 5.5" long stainless steel vessels each of which holds 600 cm^3 of sorbent. The 8 bed apparatus demonstrated CO_2 capture from flue gas at a steady state. The 8 bed apparatus can be flexibility configured with any number of beds in adsorption or regeneration. The basic flow pattern was 3 beds adsorbing and 5 beds in regenerating (Figure 2). A purge could also is done after regeneration and before adsorption to prevent the high concentration of CO_2 in the regenerator bed from being carried over to the adsorber side when the beds switch operation. Multiple 3-way control values were used to control how each bed cycles through the absorption, regeneration and purge steps. Each cycle lasts for 1-3 minutes, after which the beds rotated position relative to the flow path. The system is configured to have the gases and solids moving (cycling) in a counter current direction.

Figure 3. Multiple fixed bed in series sorbent testing apparatus

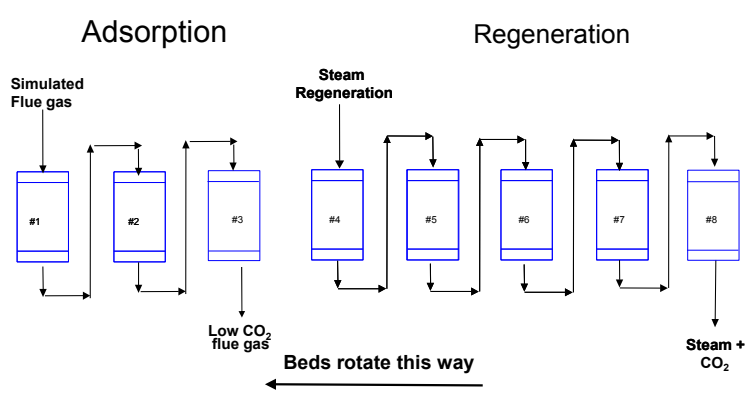

Figure 2. Multiple fixed beds in series, 8 bed apparatus as

For operation of the bench-scale system, the production of the sorbent was scaled up. The sorbent was manufactured in TDA's pilot plant production facility using the same type of equipment that would be used in commercial production. About 75 lbs of 1/8" pellet material was extruded (Figure 23). We evaluated the sorbent under varying cycling and processing conditions in our bench-scale apparatus and determined the operating conditions needed to achieve 90% capture. At this time we demonstrated steady state operation for 5 days, 24 hours a day. The sorbent achieved near 90% capture continuously over the entire 5 day test; the performance was very stable. The sorbent showed no degradation with repeated cycling. In addition to the 5 days of continuously cycling we were using the same batch of sorbent had been previously tested for thousands of cycles.

Figure 5. Production of TDA's Adsorbent at pilot plant at TDA

In the next step in the research the sorbent-based post combustion CO_2 capture process was field tested using real coal-derived flue gas (Figure 4) for over 100 hours of continuous operation. This testing was conducted at Western Research Institute's (WRI) combustion test facility in Laramie, WY. TDA's CO_2 sorbent achieved greater than 90% (Figure 6). Testing was performed with flue gas from Powder River Basin (PRB) Decker coal (11-14% CO_2, ~6% H_2O, 5-145 ppm NO, and 2-11 ppm NO_2 and 0-15 ppm SO_2). The flue gas pressure was 17 psia at the entrance of TDA's sorbents bed. The sorbent process reduced the CO_2 concentration in the flue gas from 13.6% to 1.2%, and the CO_2 concentration in the regenerator outlet gas was 33% CO_2 in low pressure steam. The sorbent characterized before and after field testing campaign at WRI, and was essentially unchanged after field testing. We have therefore successfully demonstrated

Figure 4. TDA's Bench-scale CO_2 capture apparatus at WRI during field test

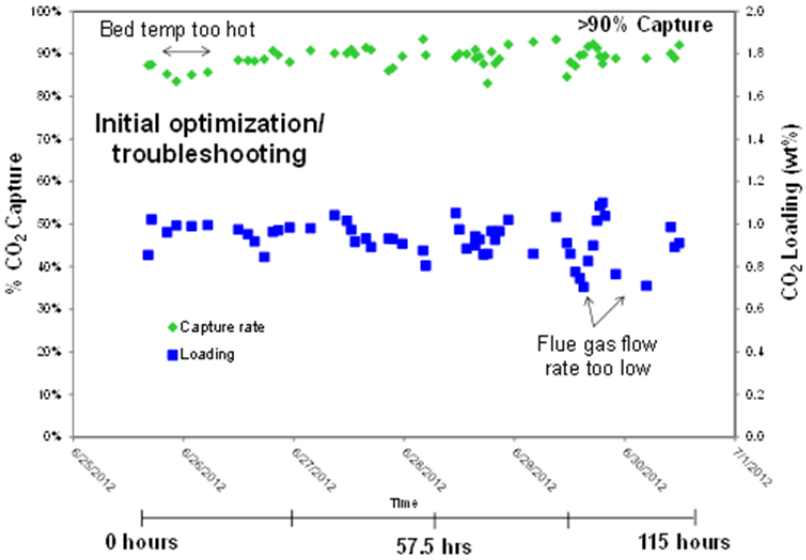

Figure 6. Field test results using coal-derived flue gas

TDA's CO_2 removal system on a real coal-derived flue gas with all the associated contaminants.

The final effort of the experimental research was to further advance this approach by optimizing both of the process and sorbent materials based on the results of the research to date. New process designs were incorporated and run in the 8 bed bench-scale apparatus. Improvements included parallel flow in the adsorption beds (rather than series to reduce pressure drop), counter current flow of the regeneration and adsorption gases installation of higher aspect ratio beds, and development of a recycle pattern to reduce steam usage. Experiments were run with three beds in adsorption and 5 beds in regeneration, 4 beds in both adsorption and regeneration, and 2 beds in adsorption and 6 regeneration. Results showed that 90% capture (with lower pressure drop) could still be achieved the adsorption in parallel, and that 3 beds in adsorption and 5 in regeneration was the optimum configuration. With 3 beds in adsorption the pressure drop is reduced by a factor of 9. Most importantly, the recycle/purge flow pattern developed reduced steam usage by 20%.

Along with efforts to advance the process TDA also continued to optimize the sorbent. New sorbent materials are promising in terms of their increased CO_2 capacity and decreased water usage. They had a more than a 70% increase in the dynamic CO_2 capacity over the baseline sorbent. Further the new adsorbents showed 30 to 45% lower regeneration steam requirements. Additional optimization is ongoing to ensure the materials maintain their stability with repeated cycling.

To demonstrate the economic merit of this sorbent-based post combustion technology, a technical and economic analysis was completed. A system and economic analysis of this process was done by B&W using an ASPEN Plus model based a retrofit of our process into AEPs Conesville #5 plant (Ramezan 2007). This is 433.7 MW_e subcritical pulverized coal plant. With TDA's CO_2 capture process the power plant has a power output of 333.9 MW compared to 303.3 MW an for amine based CO_2 capture system (Ramzean 2007). The calculated CO_2 capture cost was $45/tonne, compared to $59/ tonne for amines. TDA's process only increases the LCOE by 4.77 ¢/kWhr compared to 6.92 ¢/kWhr for amines (Ramzean 2007). Because of the promising nature of TDA sorbent technology was selected for detailed economic analysis by DOE/NETL (Stevens 2013). This analysis assumes engineering projections of the technology's potential. Thus, it was based on the current state of development of the technology but where it could get to after full development. This study determined that when mature, TDA's proposed process could capture CO_2 at a supercritical steam plant at $36/ton CO_2 capture and $46.2/tonne CO_2 avoided; a 25% reduction in cost over Fluor Econamine (Stevens 2012). Furthermore, when TDA's process was combined with an advanced ultra-supercritical steam plant and advanced compression, the cost of CO_2 avoided is only $26.6/tonne captured and $30.6/tonne avoided (Stevens 2012), which meets DOE's goal of <35% increase in COE. In summary, it is a combination of low cost materials (including a low cost adsorbent), low regeneration energy requirements, and a well-optimized and integrated process which allows us to minimize the capital and operating costs and maximize the system efficiency.

The results of the DE-NT000549 project suggest that the sorbent based CO_2 capture with alkalized alumina and isotherm operation for post combustion carbon capture has merits for further research and development. It is recommended that the performance of a fully-equipped system should be demonstrated at larger-scale (e.g., 0.5 MW) using coal flue gas. The system should contain all critical components (larger scale adsorber and regeneration contactors) to fully demonstrate the cycle sequence and flow configuration. The demonstration duration should be long enough (several months) to show extended cycling under coal flue gas conditions under

optimum operating conditions. The selected demonstration scale should be large enough require sorbent production in large quantities. A more detailed system simulation and cost analysis is also recommended, including design work and accurate quotes from the suppliers of the major process equipment (e.g., air separation unit, gasifier, CO_2 compressors). Successful completion of this recommended work will provide the basis for the new technology to be employed in potential commercial pilot-scale demonstrations (50-100 MW scale).

1 Introduction

Coal currently accounts for 45% of U.S. electric power generation (Annual Energy Outlook 2012). Even with the planned retirement of some coal-fired power plants by 2035, coal will still provide 38% of electricity in the U.S. Carbon dioxide is a major greenhouse gas, and roughly one third of the U.S. carbon emissions come from coal-fired power plants. Because future regulations are expected to require CO_2 capture, these plants will need to be retrofitted with a low cost CO_2 capture technology.

The fundamental reason that post-combustion CO_2 removal, compression and sequestration is expensive and consumes a large amount of energy and capital is that the power plant exhaust (flue gas) is at ambient pressure and the CO_2 is diluted with N_2 (there is only 10 to 15 vol% CO_2 in the flue gas). As a result, any successful carbon capture technology must be able to concentrate the CO_2 so that it can be compressed by a factor of 100 to 1,000 for subsequent sequestration. There is a minimum theoretical energy requirement to recover 90% of the dilute CO_2 in the flue gas (i.e. concentrate it from 1% to 100%) and then to compress it to 2,200 psig, which corresponds to 9.46% of the plant output; the minimum power loss to concentrate CO_2 in the flue gas to pure CO_2 at 1 atm is 3.05% and compression to 2,200 psia adds another 6.41%. Assuming an additional 4% penalty for transportation and sequestration, CO_2 capture will reduce the plant output by a minimum of 13.46%. For example, for a 433.7 MW_e power plant this would reduce the power plant energy to 375.3 MW_e. Any inefficiency in the CO_2 removal system will further increase this energy penalty. Therefore, our objective is to come as close as possible to the theoretical minimum energy requirement with our process.

Methods to CO_2 capture from existing coal fired power plants include oxy-combustion and post-combustion technologies. Oxyfuel combustion processes use oxygen rather than air for combustion of the coal, and produce an exhaust gas that is mainly water vapor and CO_2. Oxy-firing has projected cost of \$36 to \$52/ton CO_2 avoided (McDonald 2007). However, oxycombustion cannot be simply substituted for air combustion because existing facilities cannot withstand the high temperatures resulting from coal combustion in pure O_2 (Herzog 1993, Ciferno 2008). Post-combustion CO_2 capture methods can make us of aqueous ammonia, advanced amines, physical adsorbents (zeolites, carbonaceous materials, solid amines, metal-organic frameworks), physical sorbents (Selexol), cryogenic coolers and membranes. The fundamental problem is that for a 90% recovery of 10% CO_2 in the flue gas at 1 atm, we are essentially pumping the CO_2 from 0.01 to 1 atm and then to 150 atm. The energy penalty associated with current post-combustion CO_2 capture is 28% to 33% of the initial plant output (DOE/NETL-2007/1282). Analyses conducted at NETL shows that CO_2 capture and compression using amines raises the cost of electricity from 7.5 cents/kWh to 13.9 cents/kWh (Black 2010 DOE/NETL-2010/1397). Aqueous amines are the current state-of-the-art, but still cost \$69/ton of CO_2 avoided. Oxycombustion has somewhat lower efficiency impacts (25 to 29%) (DOE/NETL-2007/1291). In all of these cases, the efficiency and energy penalties are too high, and new, lower cost methods for carbon capture are needed.

2 TDA's Sorbent Post Combustion CO_2 Capture

TDA Research, Inc (TDA) is addressing the need to capture the CO_2 from coal flue gas by developing a new low-cost solid sorbent-based process. Whereas most CO_2 separation processes consume large quantities of energy and significantly increase the cost of generating electricity, TDA's sorbent removal process can separate the dilute CO_2 from the flue gas while inexpensively producing electricity. TDA Research, Inc. is developing both the solid sorbent

and the process designed around that material. By integrating materials and process development we maximize our R&D cost effectiveness.

TDA's CO_2 capture system is designed to be located downstream of the flue gas desulfurization unit. Figure 7 shows the major components of the pulverized coal (PC) power plant along with TDA's post-combustion CO_2 emission control system. TDA's alkalized alumina adsorbent removes dilute CO_2 from the flue gas at intermediate temperature (130-180°C, 266-356°F) and near ambient pressure. The regeneration product gas is then sent to a compression and purification train to generate high pressure CO_2 that can be sequestered.

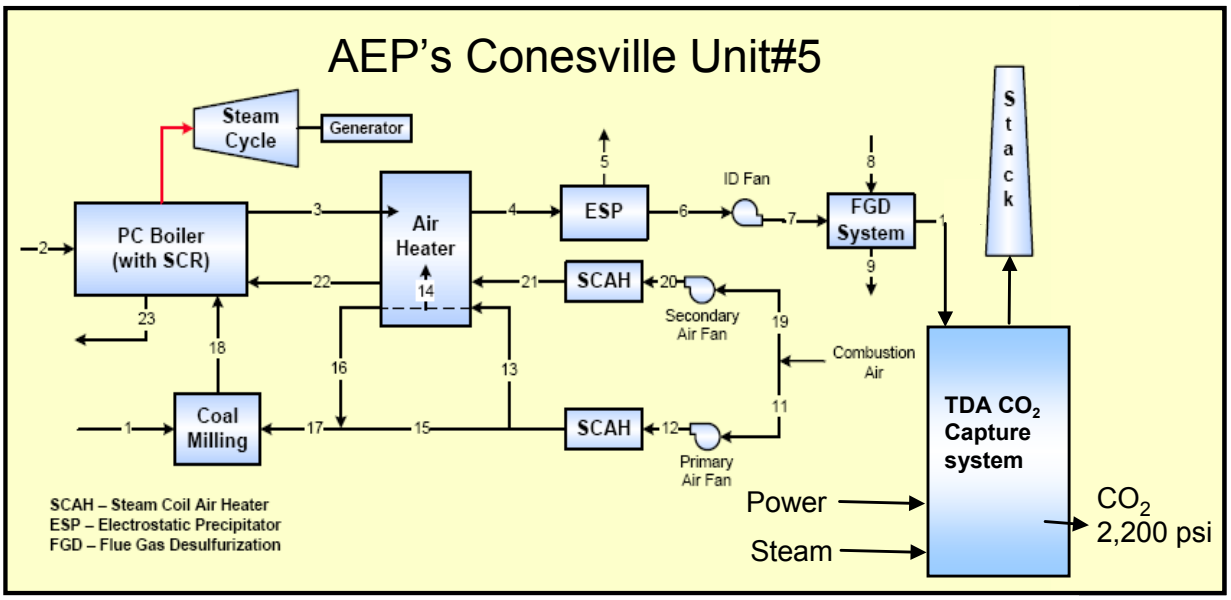

Figure 7. TDA's CO_2 capture system on existing coal plant (drawing modified from DOE/NETL-401/110907)

The overall schematic of TDA's system is shown in Figure 8. TDA's sorbent-based capture system includes three parts: the adsorber/regenerator unit, the low-pressure steam generator, and the CO_2 compression and purification unit. The process uses a sorbent to pull the dilute CO_2 out of the flue gas at intermediate temperature and ambient pressure. This low cost physical adsorbent is regenerated with low-pressure superheated steam.

This process is significantly different from other solid adsorbent processes because of its isothermal and isobaric operation. TDA's process is unique and tailored to the sorbent's characteristics. We use low pressure steam (~1 atm) for desorption, which is performed under near isothermal conditions (130-180°C, 266-356°F). This regeneration method is attractive because it does not require heating and cooling of the solids (gas-solid exchangers are expensive and not very efficient) or use valuable high-pressure steam. This greatly simplifies the solids handling and thermal management. In contrast, most chemical absorbent (aqueous ammonia, carbonates, etc.) and solid adsorbents (Sjostrom 2010) proposed require temperature swing for regeneration. Conventional amines (MEA, Fluor economine) require temperature swings of 30-120°C), and higher pressure steam for regeneration (73.5 psia) (Black 2010).

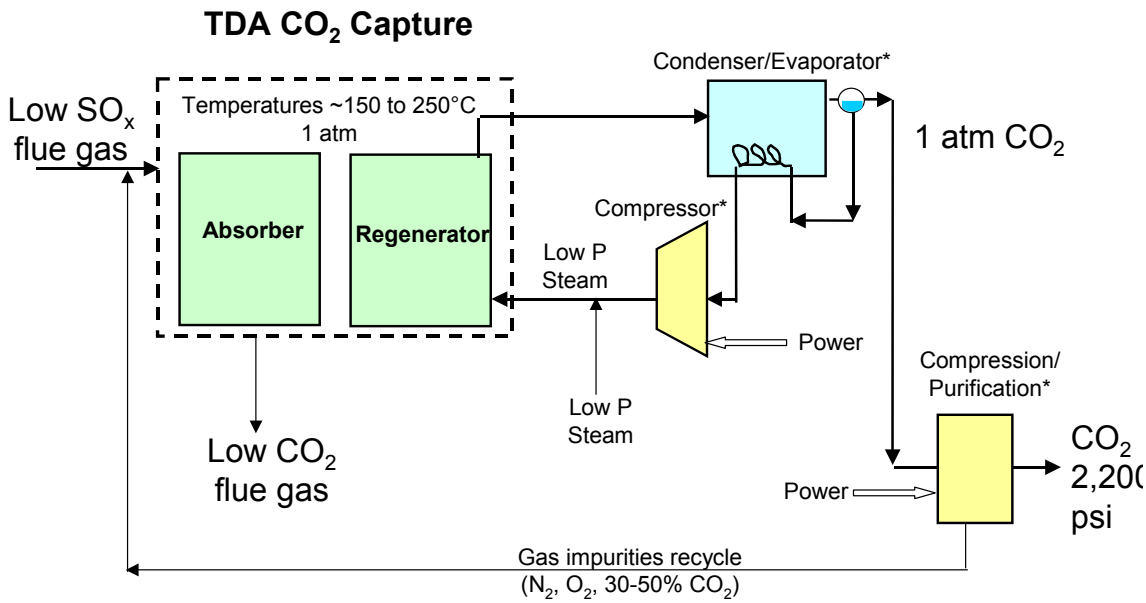

Figure 8. TDA's CO_2 emission control system

TDA's system design is being developed around our specific sorbent and its features. The flue gas is contacted with the sorbent in a gas-solid contactor. We have chosen our adsorber process design to maximize the performance of the adsorbent. Adsorbents operate along a concentration gradient. That is, they absorb more CO_2 when the concentration is higher than when the concentration is lower. Countercurrent contactors are ideal for our sorbent process because they allow the freshly regenerated sorbent to come into contact with the leanest flue gas (at the exit of the reactor). This decreases the CO_2 concentration in the flue gas leaving our process to lowest possible level and achieves the highest capture rates. A schematic showing the sorbent circulation direction between the absorber and regenerator is presented in Figure 9.

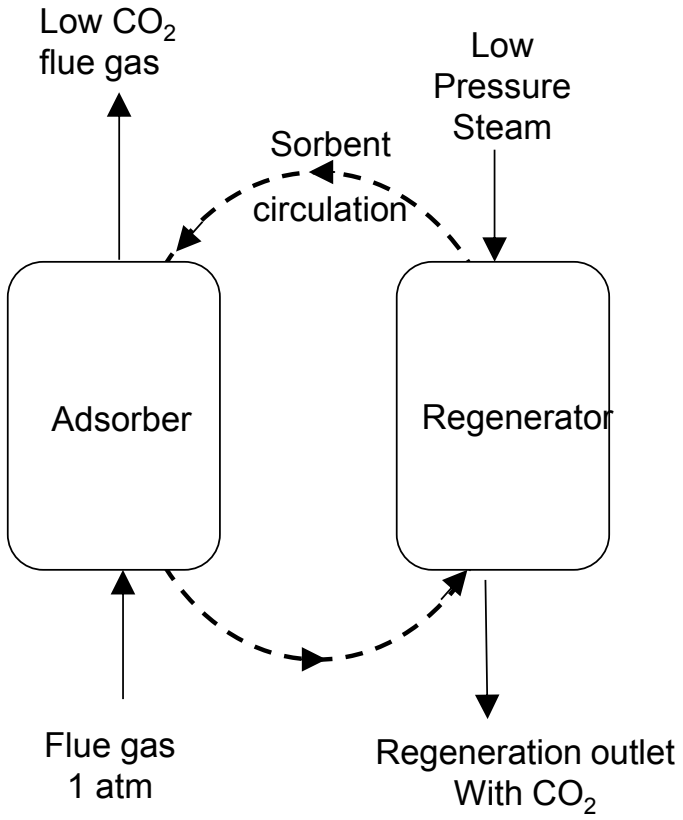

Figure 9. Schematic of sorbent circulation with counter current flow.

The essential piece of TDA's design is a low-cost, dry solid sorbent that has a long cyclic life. TDA's sorbent is a

regenerable, dry alkalized modified alumina. The sorbent interacts with CO_2 on the alkali surface sites. This material is low cost because it is made from inexpensive raw materials with simple processing. Cost is very important in this application because tremendous quantities of sorbent will be required to remove CO_2 from the flue gas of power plants, since there is simply so much coal-fired power plant flue gas produced. Approximately 10,000 tons/day of CO_2 is produced by one 500 MW power plant and there are 300 GW ($3x10^5$ MW) of power plants in the U.S (the equivalent of 600 500 MW plants). This means to capture CO_2 an enormous amount of sorbent will be required. The use of a low cost CO_2 sorbent is a significant advantage to our approach.

Our sorbent requires only a modest heat input for the regeneration process. From the adsorption isotherms that we measured in our TGA (Figure 10), we calculated that heat of adsorption ranges from 3 kcal/mole at higher CO_2 concentrations of 10-14%, to 10.3 kcal/mole at CO_2 concentrations of 1-5%. In comparison, amines (14 kcal/mole) and alkali absorbents (25 to 35 kcal/mole) require much more energy for regeneration.

In summary, TDA's CO_2 capture process is based on an alkalized alumina material with steam regeneration. This is a low cost, relatively simple material which is durable and robust through multiple cycling. The approach of this research has been to develop for the material and process designed around it.

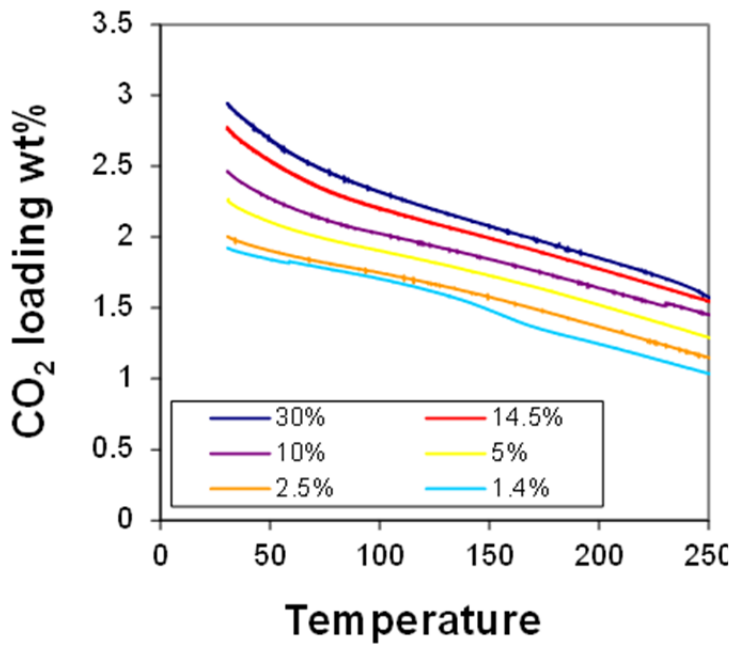

Figure 10. Isotherm data on TDA baseline sorbent used in field testing

3 Project Objectives

The objective of this project was to demonstrate that technical and economic merit of TDA's sorbent based CO_2 capture approach. Through laboratory, bench-scale and field testing we sought to show this technology can effectively and efficiently capture CO_2 produced at a existing pulverized coal power plants. The objective of the first budget period was to experimentally demonstrate the low cost sorbent's performance and to show through computational modeling the technical merit of the proposed CO_2 capture process design. In the second year our goal was to test the cyclic life of the sorbent, particularly in the presence of flue gas contaminants such as SOx and NOx and calculate the process economics to update our cost of CO_2 capture calculations. In the third budget period the objective was to construct and operated a test unit that demonstrates our CO_2 removal performance on a real coal-derived flue gas stream at Research Institute's (WRI) coal combustion test facility. Finally, in the last budget period we used the knowledge developed to date to further advance both of the sorbent and the process.

We used the experimental data developed under the project to carry out an extensive engineering and economic analysis of the post-combustion CO_2 captures system according to DOE guidelines for CO_2 capture.

The project goals for each budget period were the following:

- Budget Period 1: Show technical merit
  - Demonstrate the effective performance of low cost sorbent
  - Use an Aspen model to calculate system efficiency
- Budget Period 2: Characterize and Optimize Design
  - Measure the sorbent's cyclic lifetime and the effect of contaminants
  - Optimize the system design
  - Refine the process economics calculations
- Budget Period 3: Demonstrate process on coal derived flue gas
  - Construct a bench-scale test unit
  - Show the process's performance on a real coal-derived flue gas stream
- Budget Period 4: Optimize CO_2 capture process
  - Evaluate improved sorbents
  - Evaluate new process improvements

4 Results

Over this multiple year project TDA has performed extensive testing and evaluation on our alkalized alumina sorbent based CO_2 capture process. The major consisted of project efforts laboratory testing (Budget Period 1 and 2), bench-scale testing (Budget period 3), field testing (Budget Period 3), further advancement of the sorbent and process (Budget Period 4), and system and economic analysis (Budget Periods 1, 2, 3 & 4).

Table 1. TGA screening tests on candidate sorbent formulations

Sample ID	TGA CO_2 loading (wt%)
Initial Sorbent	**0.28**
#241-99A rep T	0.54
#241-99A rep W	0.48
#241-99A rep-1	0.34
#241-99A rep-1	0.32
#241-99A-rep-1	0.31
#241-99A-rep-1A	0.40
#241-99A-rep-1B	0.44
RW-838-1A	0.15
RW-838-2A	0.31
RW-838-2B	0.35
RW-838-2C	0.34
RW-838-3A	0.43
RW-838-3B	0.38

4.1 Laboratory testing

The first part of this project was focused on understanding and improving the sorbent. We screened sorbent compositions by TGA and evaluated promising formulation in our fixed bed apparatus. Our best sorbent was tested to evaluate the effect of flue gas composition including how SOx and NOx influenced the sorbent cycling.

4.1.1 TGA Testing

TDA's initial sorbent material was previously developed at TDA for another application. At the

onset of the project, TDA sought to optimize the sorbent for CO_2 capture and show that it can be made at extremely low cost.

We ordered a dozen different raw materials for making the sorbent. We considered a wide range of raw material sources and grades for optimization of the low-cost dry, solid sorbent. In doing so we built a database of bulk suppliers and cost data.

We made over 30 sorbent compositions which were screened for surface area, crush strength, volumetric density and CO_2 loading. CO_2 loading measurements for these screening tests were done by thermogravometric analysis (TGA) (Table 1). Based on the results of the screening tests, we succeeded in replacing the binder and one other component with lower cost raw materials. The best of the low cost sorbents were selected for further testing under simulated flue conditions in a fixed bed testing apparatus. They were scaled up to produce 300 cc for evaluation in the fixed bed testing apparatus.

4.1.2 Fixed Bed Evaluation

With the fixed bed apparatus TDA evaluated candidate sorbents under varying conditions. A critical part of this work was evaluate of the sorbent in the presence of flue gas contaminatns and the performance of a long cyclic test (1500 hrs)

Fixed Bed Apparatus

The CO_2 absorption capacity of the sorbents were measured in an automated fixed bed testing apparatus (Figure 11, Figure 12). All gas flows are controlled with electronic mass flow

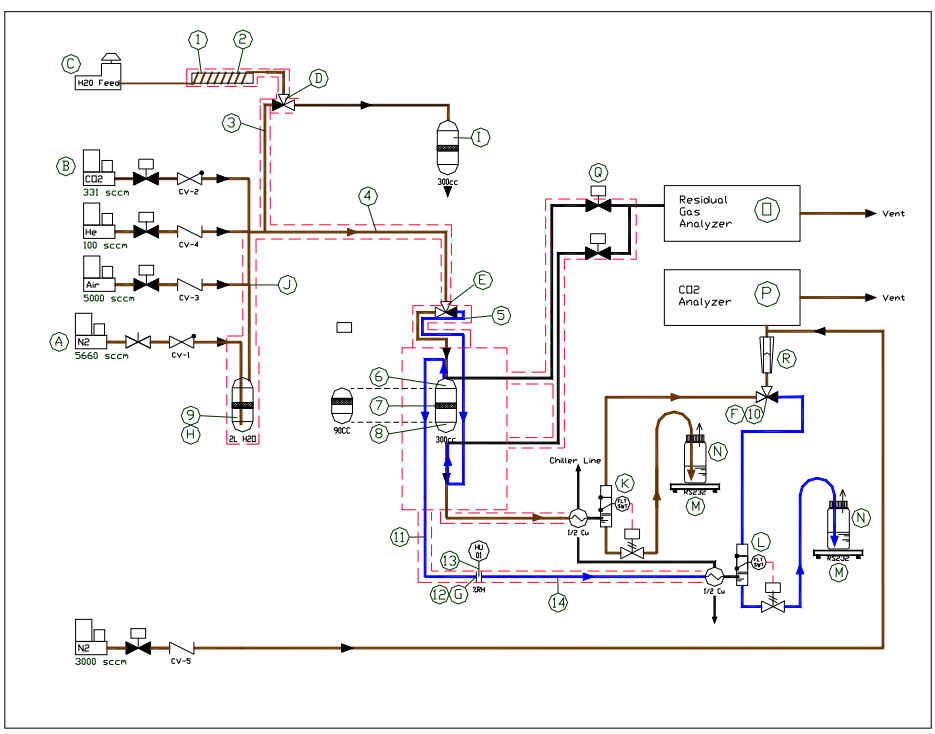

Figure 11. PI&D of Fixed Bed Testing Apparatus

controllers. A Waters HPLC pump is used to introduce water to form steam. The flue gas moisture is added using a temperature controlled sparger. The apparatus is equipped with a 300cc fixed bed reactor. A Mellen tube furnace surrounding the packed bed reactor keeps the system at temperature. Fixed bed apparatus has counter flow orientation for the adsorption and regeneration gas flow directions. It operated in a batch mode switching between adsorption and regeneration modes. An on-line CAI 300 IR analyzer measures the CO_2 concentration after condensing the steam. Continuous analysis of CO_2 allows us to monitor breakthrough gas concentrations and to measure a total CO_2 absorption capacity. The apparatus is automated with Control EG software and is installed in the custom walk in hood so that it can operate safely with toxic and combustible gases.

Figure 12. TDA 300cc fixed bed testing apparatus

We used this system to measure the adsorption and regeneration profiles and dynamic CO_2 capacity and regeneration. The process conditions for most tests are ambient pressure, moderate temperatures ~130 to 200°C, and 13% CO_2 and ~9% H_2O. The system can also add contaminants such as SO_2, NO and NO_2 to the simulated flue gases.

Effect of Flue gas water composition

TDA's sorbent was evaluated in a 300 cc packed bed under simulated flue gas and steam regeneration to measure its capacity. Figure 13 shows its CO_2 capacity from 169°C (336°F) to 219°C (426°F) as function of flue gas moisture content. We observed that water in the flue gas does not significantly degrade the sorbent's CO_2 capacity.

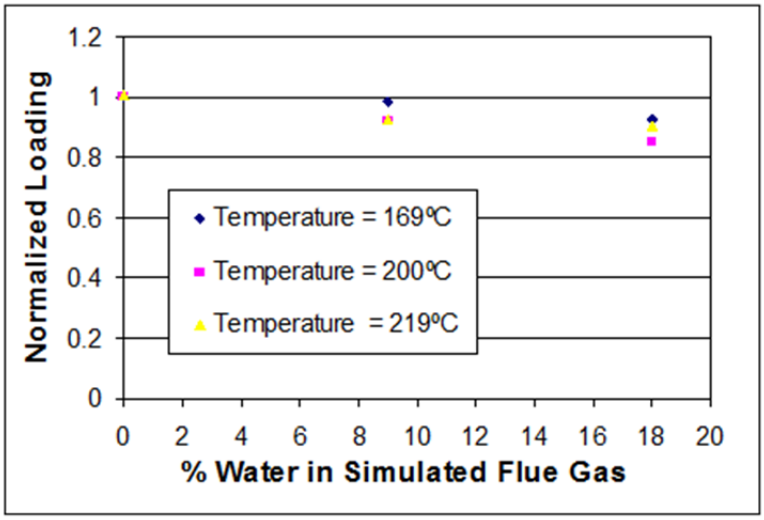

Figure 13. The effect of moisture in simulated combustion flue gas (13.8% CO_2) on the CO_2 loading of alkalized alumina adsorbent. The loading level is normalized to the loading at 0% humidity.

Cycing with NOx in the Flue Gas

We also measured the performance in the presence of NOx. Exposure to 739 ppm NO and 84 ppm NO_2 did not affect the sorbent's CO_2 capacity through 200 cycles. Typical flue gas contains about 0-140 ppm NO with 5-10% conversion of NO to NO_2. We chose to use elevated NO and NO_2 levels to accelerate any possible sorbent degradation.

The NO_x experiments were run in our 300-cc fixed bed testing apparatus using the alkalized alumina sorbent GG855-37. The absorption space velocity is 1000 1/hr with a 5 min cycle length. The simulated 1 atm flue gas was 12.8% CO_2 feed; 5% oxygen; 6.0% water vapor; 739 ppm NO and 84 ppm NO_2. These NO and NO_2 level are high; typical flue gas exhaust contains about 0-140 ppm NO with 5-10% conversion of NO to NO_2. We chose to use elevated NO and NO_2 levels to accelerate the impact on the sorbent and see any potential degradation faster. After absorption sorbent bed is regenerated with steam at a 500 1/hr space velocity for 10 minutes.

We used two continuous gas analyzers to follow the progress of our expeirments, a Servomex 1400 CO_2 analyzer, and a ThermoElectron 10S NO_x detector. There is unfortunately some cross talk between the analyzers, with the NO_x interfering with the readings on the CO_2 analyzer. Therefore, it is difficult to measure the CO_2 loading correctly when the NO_x is present. To gauge if NO_x is degrading the sorbent by irreversible reacting to it, we measured the CO_2 loading for a few cycles periodically without the NO_x. This data is shown in Figure 14. We conducted 218 cycles total, with NO_X present during 183 of them. We see no loss of in loading in the sorbent over this test. The CO_2 loading (wt.%) is holding steady at 1.2 wt%. It appears that NO_x is not absorbing onto the sorbent and is flowing out with the flue gas exhaust. The highest NO_x is detected in the outlet during absorption, and decreases during regeneration (as the analyzer is going back to zero).

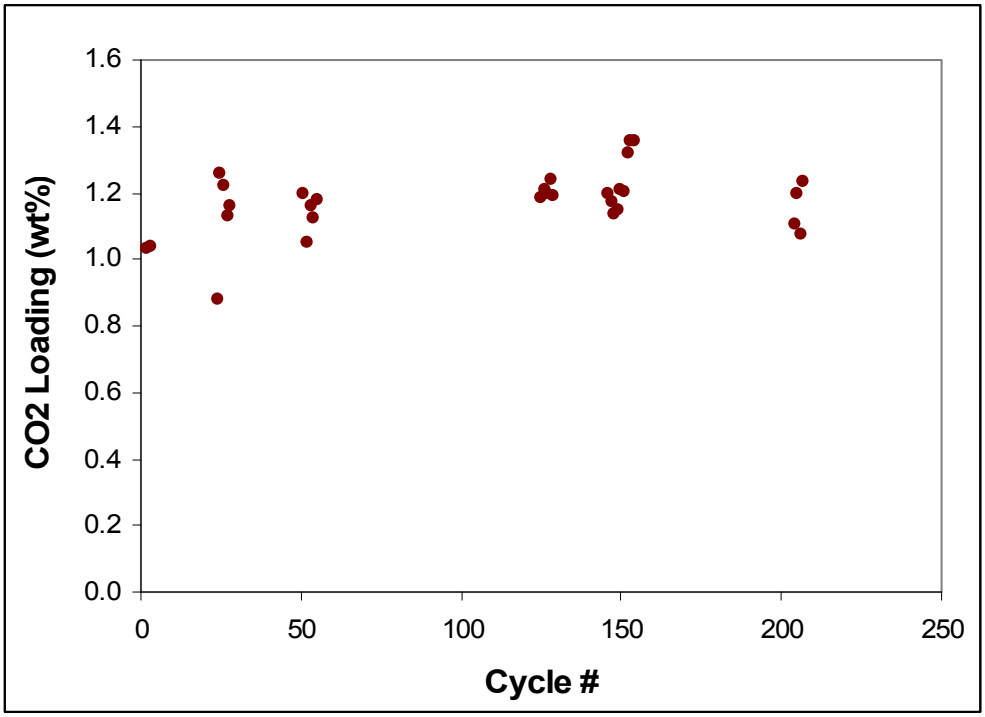

Figure 14. CO_2 loading measured periodically between cycling with 822 ppm NO_x

Extended Cycling with SO_2

We also ran an extended cycling experiment (1500 hours, which was 9300 cycles) with SO_2 in the simulated flue gas (13.8% CO_2, 9% H_2O, 77.2% N_2, 3% O_2, 104 ppm SO_2). This SO_2 level is based on the level seen at the Conesville #5 plant without a SO_2 scrubber (DOE/NETL-401/110907, Ramezan 2007). The extended test showed a loss in capacity over time. At the end of the testing; however, we demonstrated the sorbent could be reconditioned with a reducing gas and returned to its initial CO_2 loading. Under low sulfur flue gas conditions (5 ppm SO_2), we calculated that only annual replacement or reconditioning would be needed.

The objective of this task is to test TDA's alkalized alumina sorbent for an extended period under simulated operating conditions to determine the cyclic life of the sorbent. TDA's existing single bed test unit was previously modified to allow for testing with SO_2. Exposure of the sorbent to contaminant SO_2 in the flue gas is an important test condition.

The cycling test was conducted operating at 150°C with a 3 minute (1000 SV) absorption cycle and a 6 minute (500 SV) regeneration cycle. The mass of sorbent being tested was 178.7 g in a 300 cc reactor. The simulated flue gas was 13.8% CO_2, 9% H_2O 3% O_2, and 104 ppm SO_2 at 1 atm. With the oxygen present SO_3 can also form. The operation and data collection of the experiment is fully automated and ran 24 hours a day. Initially, there were some issues/glitches with the continuous operation (eg. The water pumped into the system stopped once overnight), but in general the test ran smoothly. The sorbent was cycled for over 9300 cycles during the 1544 hr (63 day) test. CO_2 loading levels were recorded periodically and are presented inFigure 15. The CO_2 dynamic loading of the sorbent declined during the test. The loading decrease

was steady throughout the test indicating the sorbent was slowly but continuously being poisoned over time.

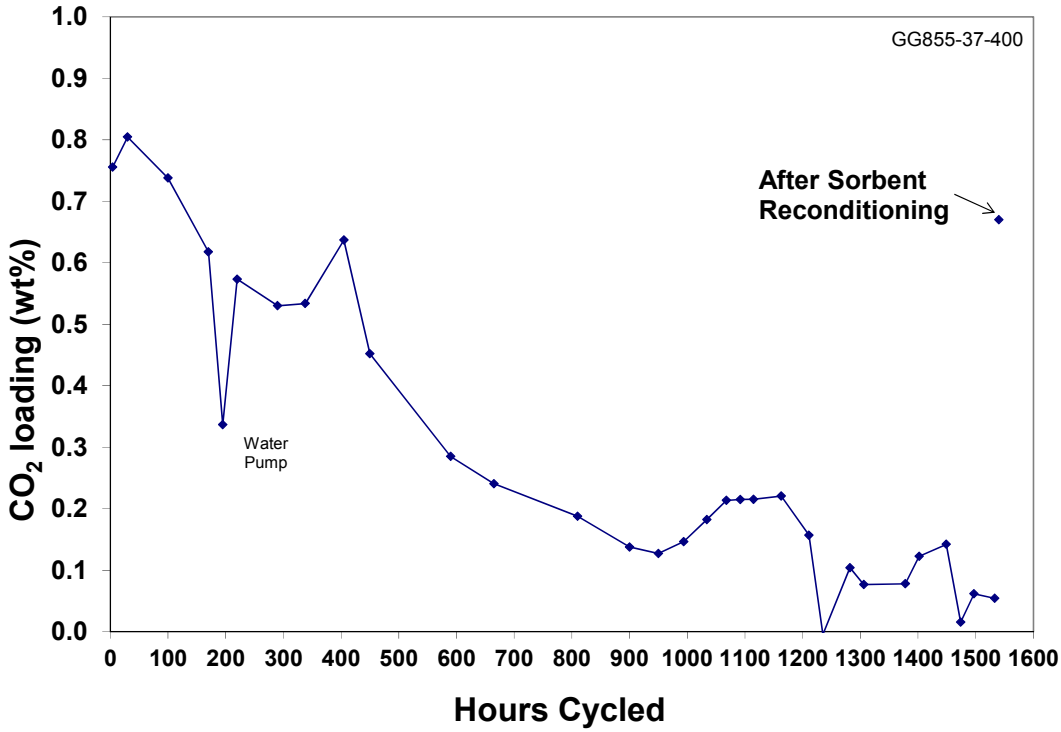

Figure 15. Long term cycling under simulated flue gas, 13.8% CO_2, 8% H_2O and 104 ppm SO_2

After 950 hours, midway through the test, we removed a sample of the sorbent for evaluation. We characterized the physical properties is sorbent to determine the cause of the decrease in loading. We measured the loading by TGA, the surface area, pore size, pore size, crush strength, and aluminum, alkali, and sulfur content by elemental analysis. There was no significant change to the surface area, pore size, pore volume or crush strength. The amount of alkali in the sorbent had also not changed. The cycling in the TGA confirmed that the loading had decreased significantly. The reason for this decline was clear in the elemental analysis. The sorbent had been absorbing SO_2 and now contained 6.0 wt% sulfur; the loss in activity was clearly due to poisoning with sulfur. Based on this result we used the TGA to explore reconditioning conditions that could remove restore the sorbent's activity. Several different temperature and gas compositions were evaluated. From this study we found that the sulfur could be removed by reducing the SO_4 compound with H_2 at 650°C.

At the end of the cyclic testing we reconditioned the sorbent with 20% H_2 in N_2 at 650°C for 2.5 hours. The sorbent was cycled again with the simulated flue gas containing 104 ppm SO_2. After reconditioning, the sorbent returned to its initial CO_2 loading capacity as shown in Figure 15. This confirmed that it was only sulfur absorbing on the sorbent that was degrading the capacity. The alkalized alumina was not degraded in any other way. After reconditioning, the sorbent's activity can be recovered and the sorbent could still be used.

From this extended cycling test it appears the sorbent should be reconditioned about every 400 hr to 500 hours (20 days) to prevent poisoning assuming 104 ppm of sulfur in the flue gas

(Figure 16). Under low sulfur flue gas conditions (5 ppm SO_2), it is anticipated that the reconditioning would be conducted annually. At 1 year at 5 ppm is equivalent to 18 days at 104 ppm. Thus, the sorbent could be replaced or reconditioned annually.

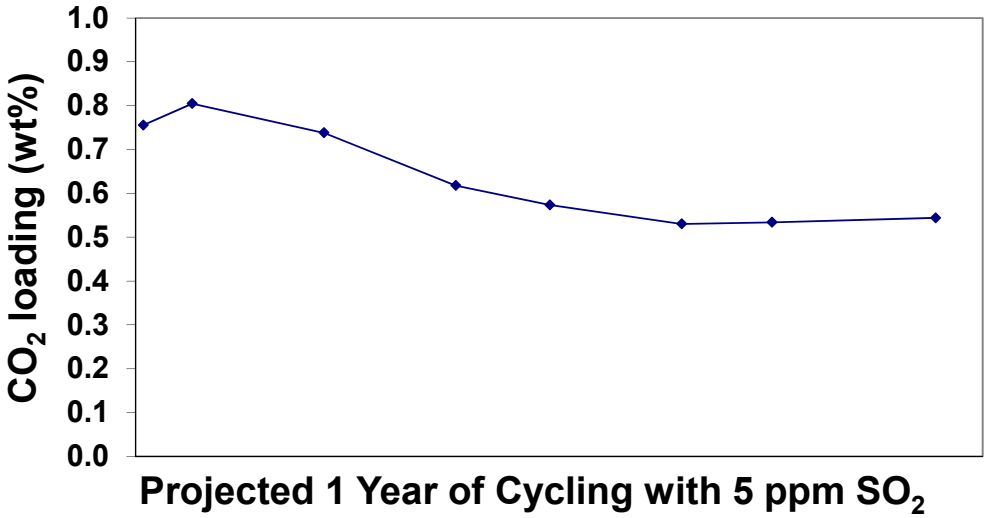

Figure 16. Projected cycling performance with 5 ppm of SO_2 for 1 year.

4.1.3 Summary of Laboratory Fixed Testing

In the laboratory effort we developed new sorbent formulations, increasing the dynamic loading from 0.4 wt% to 1 wt% as measured in a single fixed bed. The sorbent formulations evaluated under varying space velocities, temperatures, cycle times, and flue gas compositions in a single fixed bed reactor. The sorbent was tested in our laboratory for thousands of cycles and has gone through physical property testing both before and after use. The important results of this testing were: 1) Water levels in the flue gas do not significantly affect the CO2 capacity, 2) exposure to NO and NO2 did not affect the sorbent's CO2 capacity, and 3) under low sulfur flue gas conditions (5 ppm SO2), we calculate that only annual replacement or reconditioning would be needed.

4.2 Bench-scale Testing

In the next phase of the research project we constructed and operated a bench-scale apparatus to demonstrate the continuous closed loop capture of CO_2. The process was tested at TDA in the bench scale apparatus under a simulated flue gas and then at WRI with a real-coal derived flue gas.

4.2.1 Multiple Fixed Beds in Series Design

TDA's adsorbent will have its maximum effectiveness in a counter flow reactor design (Figure 9). This flow configuration maximizes the CO_2 loading and the concentration of CO_2 exiting in the steam the regeneration bed. There are many bed designs that can accommodate this flow pattern. These include circulating the sorbent between counter-current adsorption and regeneration beds and rotating the sorbent between the adsorption and regeneration functions using a rotating moving bed. Additionally, this type of counter-current contact pattern can be achieved by cycling multiple fixed beds in series. An example how we can use a series fixed bed design option for CO_2 capture is shown in Figure 17. We concluded that the best system to construct in this project was a reactor train using multiple fixed beds in series. TDA's rotating moving wheel design is essentially many fixed beds with the gas flowing going through them in series. Thus, we can model the function of the rotating moving bed in this way. The multiple fixed bed system is configured to have the gases and solids moving (cycling) in a counter current direction. Our CO_2 capture approach can be also operated commercially with multiple cycling fixed beds (with lower risk than the wheel design). Babcock & Wilcox concurred with this reactor design for construction of the bench-scale system. It is both a viable commercial design option in and of itself, and also provide data of how the sorbent could operate if it was used in the rotating moving bed.

A schematic of the series fixed bed apparatus as initially built is shown in Figure 17. The flue gas flows through the multiple absorber beds in series (only 3 shown). As it travels through each bed the concentration of CO_2 in the flue gas is further reduced. Thus, the lowest CO_2 concentration is achieved at the exit of the last adsorber bed. The regeneration is also in series, with progressively more CO_2 picked up by the regeneration steam as it moves through the beds. Once this cycle stage is complete the process shifts to the left. Thus, bed #3 at the exit of the absorption process is always a freshly regenerated bed to pull the CO_2 level down to the lowest level. Additionally, Bed #8 at the exit of the regeneration function has just come from the absorption cycles and thus has the highest loading of CO_2 so the concentration of CO_2 coming

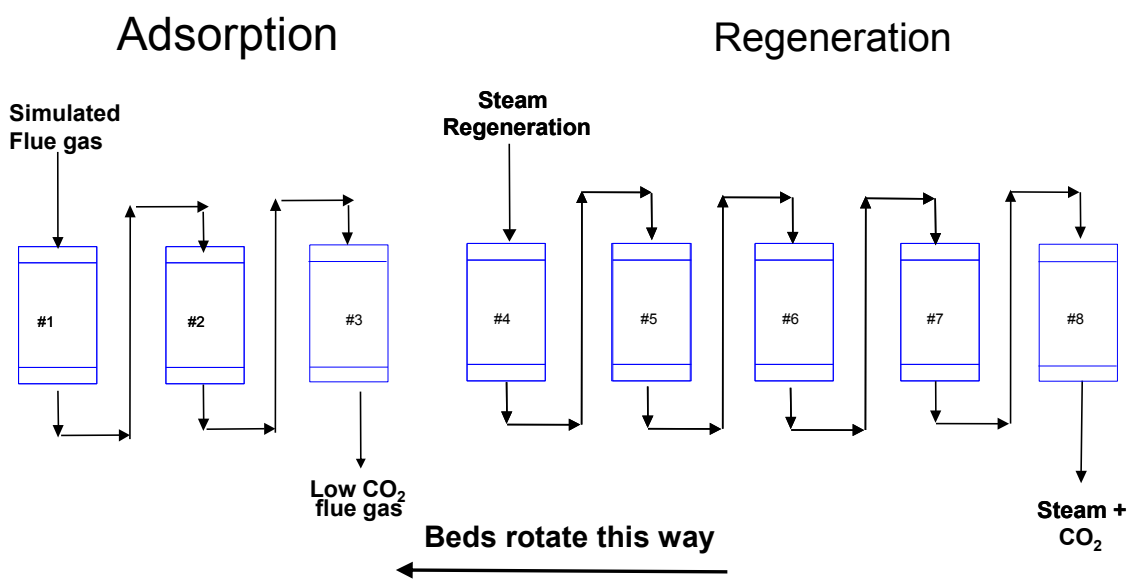

Figure 17. Multiple fixed beds in series. 8 bed apparatus as initially constructed

off at the regeneration outlet is the highest possible. Later in the project this apparatus was reconfigured so that the adsorption beds were run in parallel.

In our fixed bed testing we ran a higher SV in adsorption than in regeneration. In order to demonstrate this with our fixed beds in series apparatus we operated more beds in the regeneration mode than in adsorption. Most often in the project we ran 3 beds in adsorption and 5 bed in regeneration. This type of design with cycling between the beds is done using multiple control valves.

4.2.2 Bench-scale System Description

The bench-scale multiple bed apparatus to demonstrate CO_2 capture from flue gas at a steady state was constructed with eight 2.87" ID by 5.5" long stainless steel vessels each of which holds 600 cm^3 of sorbent. The beds were later replaced with high aspect ratio 600 cc beds. The 8 bed apparatus can be flexibility configured with any number of beds in adsorption or regeneration. Typically operation at this stage of the project was 3 bed absorbing and 5 beds regenerating (Figure 17). One bed can be used as a purge bed to remove of any remaining CO_2, nitrogen and oxygen in the dead volume after adsorption. This will prevent these gases from being carried in to the regeneration beds and being mixed in with the CO_2 in the regeneration steam. Multiple 3-way control values are used to control the cycles of each bed through the absorption and regeneration steps. Each cycle, lasts for 90 to 180 seconds, after which the individual beds are rotated in position relative to flow path, keeping the absorption-regeneration steps constant. Photos of the apparatus are shown in Figure 18 and Figure 19. The gases that could be fed to the apparatus include, air, CO_2, nitrogen, oxygen, and steam.

Figure 18. Multiple fixed bed in series sorbent testing apparatus

The absorption/regeneration temperature can be adjusted set between 120 - 200°C. The absorption gas feed can be as high as 40 slpm. The regeneration feed, which removes the absorbed CO_2 from four beds, is 40 slpm steam or less. The space velocity of the system can be up to 2400 hr^{-1}.

Figure 19. Multiple fixed beds in series apparatus in operation with a heated box around beds.

Two HPLC water pumps are used for steam/water vapor generation for the flue gas and steam flow. The water is boiled and the gases heated to the operating temperature. Each bed requires five switching ball valves, so that each bed can be in absorption, purge, or regeneration mode as time dictates. And each mode will turn the beds into series flow, rather than parallel flow. Thus, regeneration with four beds has half the space velocity of the absorption with two beds, in series. Rather than heating all the beds and valves individually, they are all enclosed in a heated/insulated box, which will be brought up to temperature prior to testing. The system runs near isothermal in absorption and regeneration at about 165°C. The ball valves have pneumatic actuators that are rated for up to 220°C and will also be in the heated box.

The operation of the apparatus is automated with OPTO22 to computer control and monitor the system. With the OPTO22 program the outlet concentrations, temperatures and pressures will be continuous monitored and recorded. This allows us to have the gas flow rates, temperatures, and valves (flow paths) all controlled automatically. The PI&D for the system as initially designed is shown in Figure 20, Figure 21, and Figure 22.

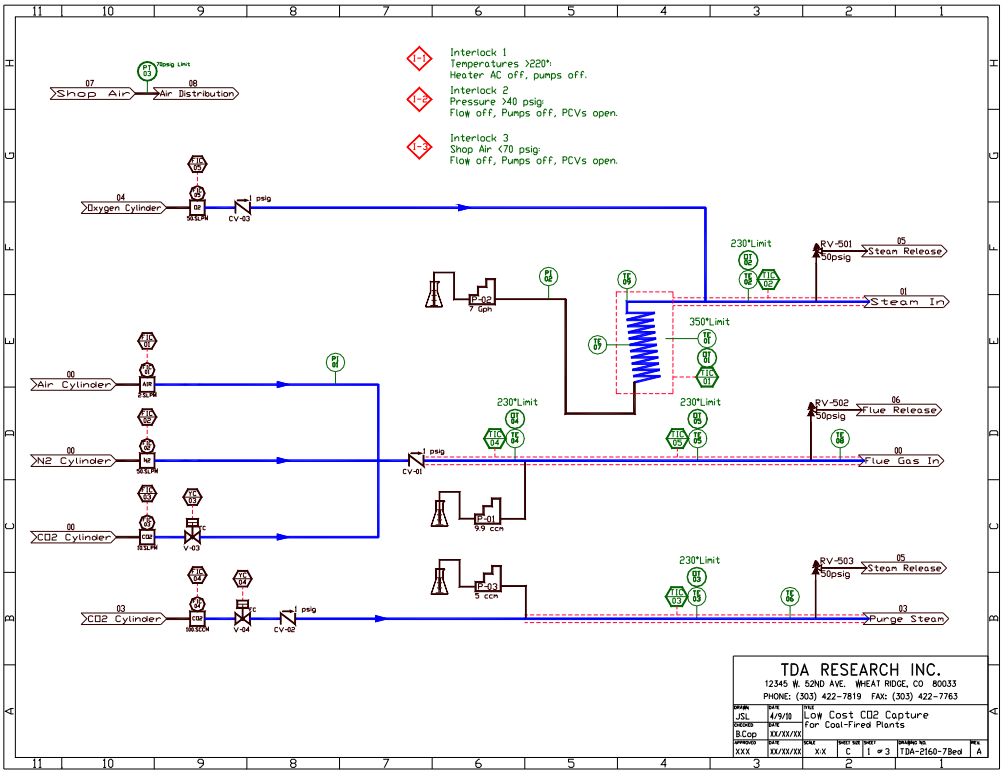

Figure 20. P&ID Sheet 1, Gas Feed Control.

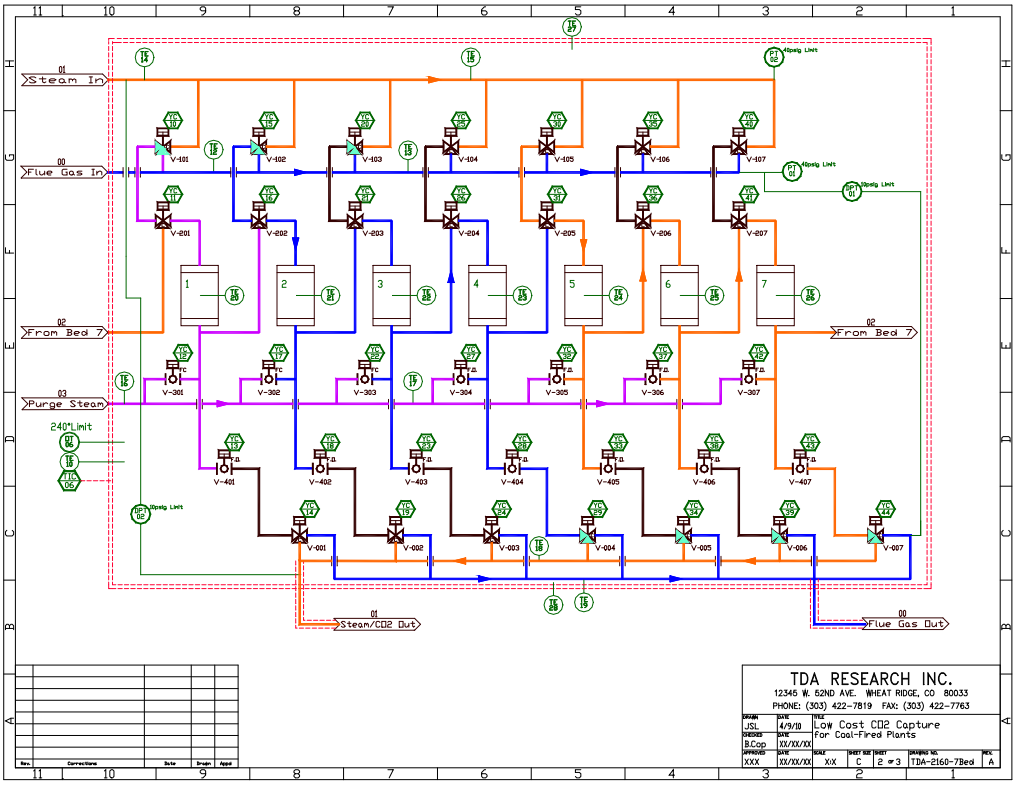

Figure 21. P&ID Sheet 2, Sorbent Beds

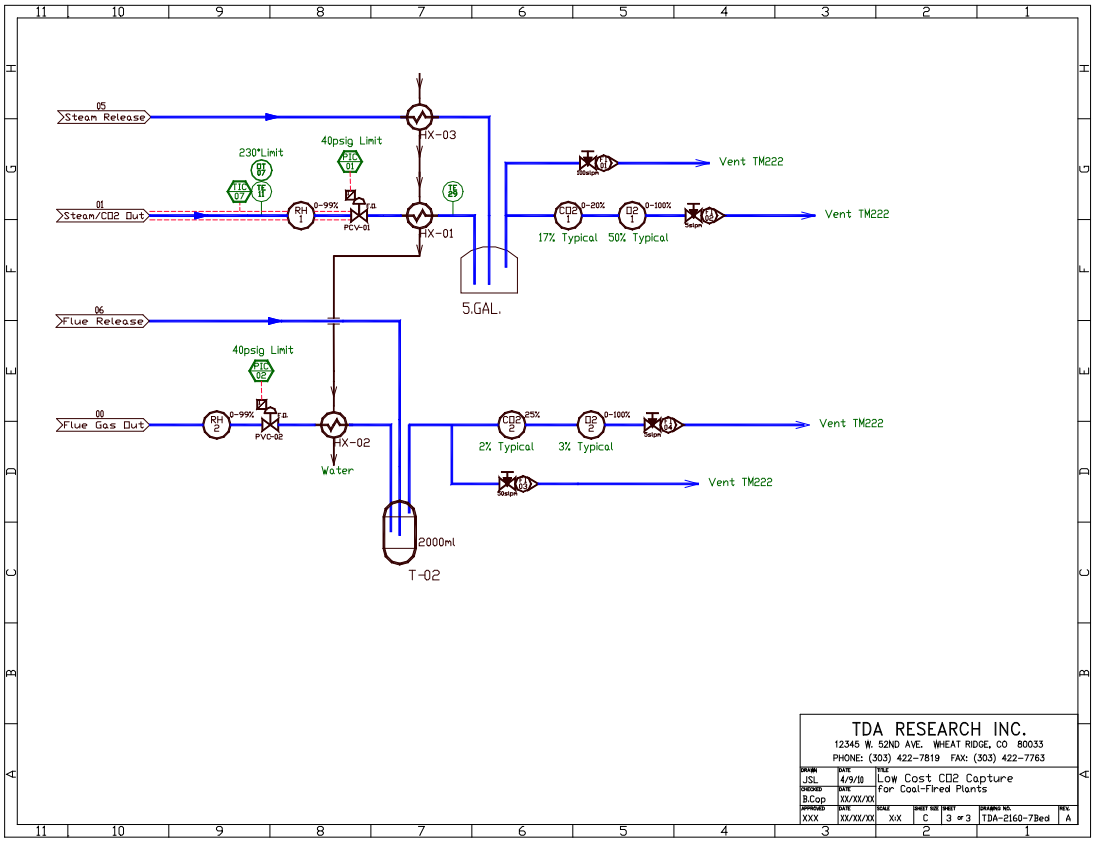

Figure 22. P&ID Sheet 3, Outlet Gas Analysis & Venting.

4.2.3 Sorbent Production for Bench-scale unit

For operation of the bench-scale system, the sorbent production of the sorbent was scaled up. The sorbent was produced in TDA's pilot plant production facility using commercial methods. About 75 lbs of material was extruded (Figure 23) and calcined. The pellet size was 1/8". This material was loaded into the bench-scale testing unit.

Figure 23. Production of TDA's Adsorbent

4.2.4 Bench-scale testing at TDA

We evaluated the sorbent under varying cycling and processing conditions in our bench-scale apparatus and determine operating conditions to achieve 90% capture. At this operating point we demonstrated steady state operation for 5 day, 24 hours a day. We also tested operation at lower capture points 90%, 80% and 70% for comparison.

5 Day Steady State Test

We then evaluated the sorbent under varying cycling and processing conditions in our bench-scale apparatus culminating in an extended cycling test that lasted for over 5 days (120 hours). We used a simulated flue gas of 13% CO_2 and 6% H_2O. The test conditions and cycle time were held constant over the entire test period. The system was very stable with no experimental problems. The sorbent had very stable performance. It achieved an average of 89.3% capture over the entire test as shown in Figure 24 The loading was also very consistent at 0.89 wt% loading as shown in Figure 25. During this test, 3 beds were run in adsorption mode, 5 beds in regeneration mode and 1 bed in purge between the regeneration and adsorption steps. The flue composition in and out of the adsorber during the last day of testing (Day 5) is shown in Figure 26. Because the performance was very consistent over all days, these graphs are representative of the performance over the entire test. As shown in Figure 26 the flue CO_2 is reduced from 13% to 1.2%. The regenerator outlet has a concentration of about 35% CO_2 (with the balance steam) as shown in Figure 27.

Thus, TDA's sorbent achieved near 90% capture continuously over the entire test. The performance was very stable. The sorbent showed no degradation with repeated cycling. In addition to the 5 days of continuously cycling, the same batch of sorbent used in this test had been previously tested for thousands of cycles at TDA for over the last six months.

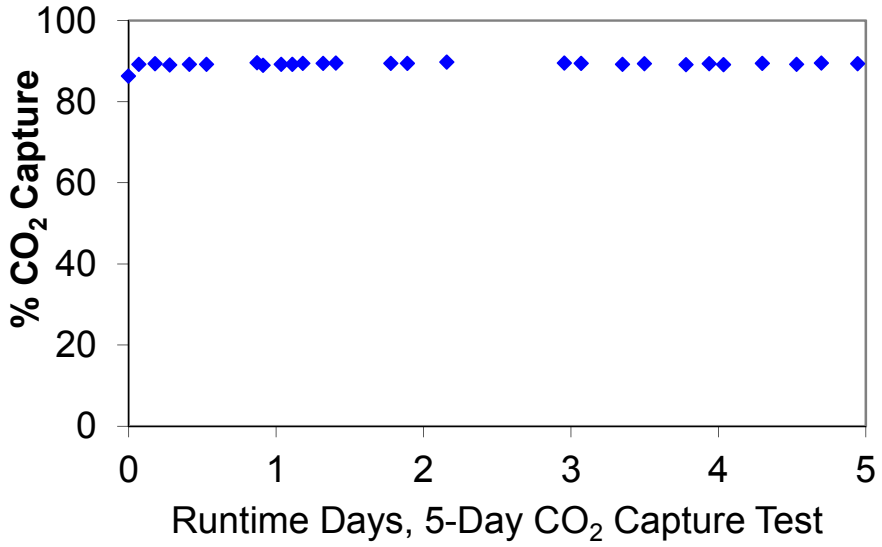

Figure 24. Capture rate during extended cycling test at TDA under simulated conditions 13% CO_2 and 6% H_2O. 5/23 to 5/28/2012.

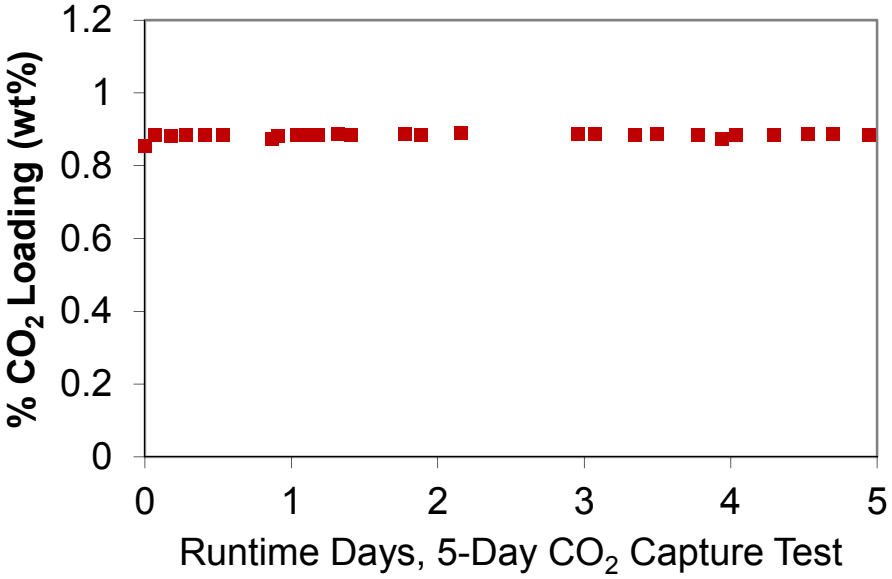

Figure 25. Sorbent loading during extended cycling test at TDA under simulated conditions 13% CO_2 and 6% H_2O. 5/23 to 5/28/2012

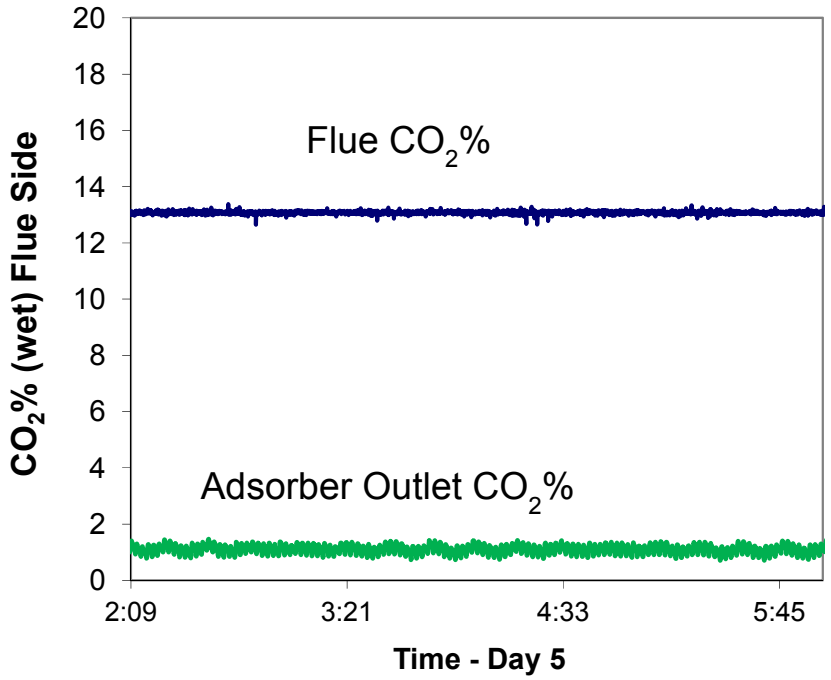

Figure 26. Inlet and outlet gas composition on flue side in multiple fixed bed apparatus during Day 5 of extended test at TDA. Flue feed gas was 13.1% CO2 and 6% H2O. 110 sec cycles. 5/28/2012 – 90% Capture

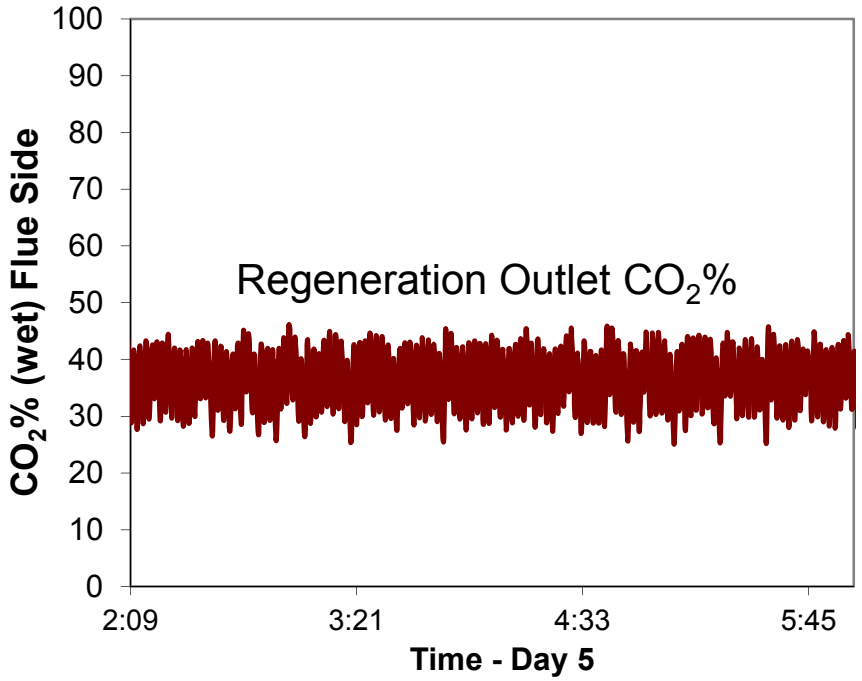

Figure 27. Percent CO_2 in regeneration outlet in multiple fixed bed apparatus during Day 5 of extended test at TDA. 110 sec cycles, 5/28/2012 – 90% Capture

Evaluation at 80% and 70% CO_2 Capture Rates

The stated goal of this project was to achieve 90% capture, and the majority of the experiments were run to meet this targert. As not all CO_2 capture technologies will be most efficient at this point, we also explored the effectivenss of the process at lower capture rates. In these tests we varied the CO_2 capture by reducing the steam flows and/or increasing the flue gas flow rate.

As just discussed 90% capture data was presented in Figure 26 and Figure 27. Here the CO_2 loading is 0.88% and 89.3% of the CO_2 is captured. The sorbent reduces the CO_2 concentration in the flue gas from 13% to 1.2%. The outlet CO_2 concentration in the regenerator is 35% (with the balance steam). During these tests, 3 beds were run in adsorption mode, 5 beds in regeneration mode and 1 bed in purge between the regeneration and adsorption steps.

In a new recent test we increased the flue gas flow rate by 12% with the same steam regeneration flow rate (no increase in steam). The cycle time was adjusted as needed to maximize the capture rate. Under these conditions 80.2% of the CO_2 was removed from the simulated flue gas (Figure 28). The CO_2 loading on the sorbent was 0.76 wt%. The concentration of CO_2 in the outlet gas increased substantially to 62% (Figure 29).

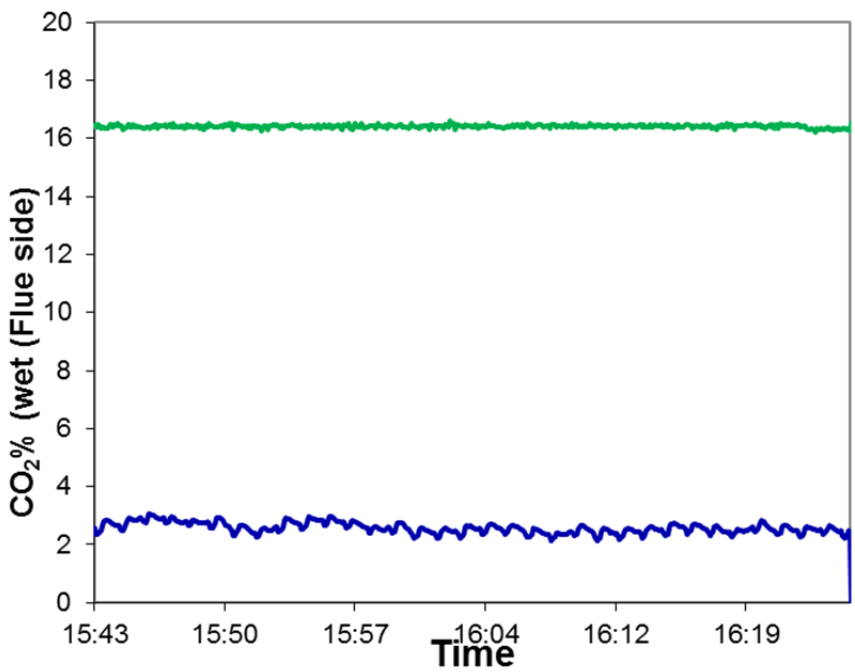

Figure 28. Inlet and outlet gas composition on flue side in multiple fixed bed apparatus for 80% Capture. Flue feed gas was 16.3% CO_2 and 5.5% H_2O. 75 sec cycles. 8/9/2012

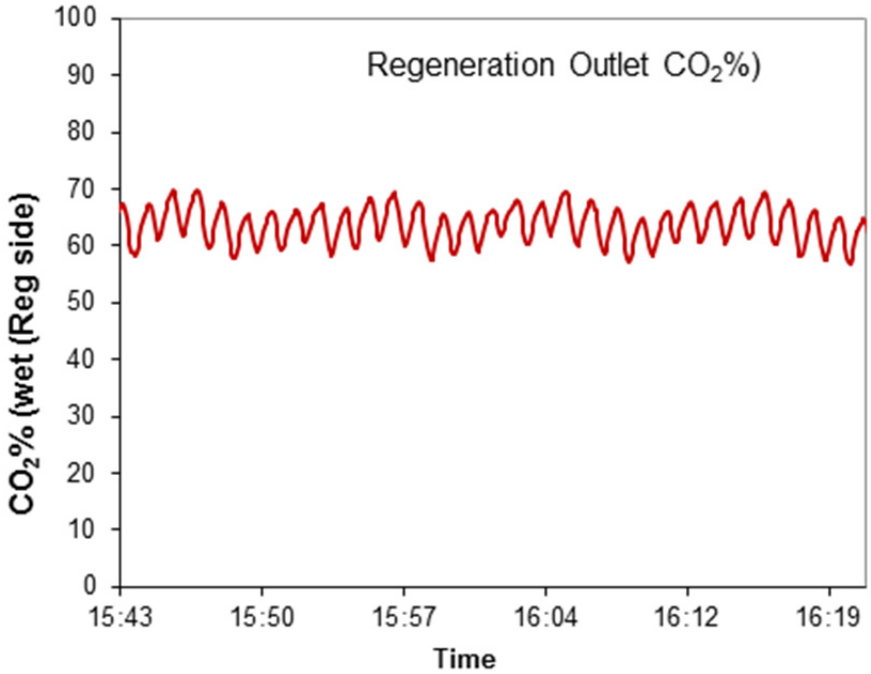

Figure 29. Percent CO_2 in regeneration outlet in multiple fixed bed apparatus for 80% Capture. Flue feed gas was 16.3% CO_2 and 5.5% H_2O.75 sec cycles, 8/9/2012

Finally, we further increased the flue gas flow rate through the sorbent beds by another 31% and decreased the steam flow rate by 15%. Under these conditions we are starving the process of steam during regeneration. The cycle rate was reoptimized for these flow conditions. The capture rate was still 69.5% despite the significantly reduced steam flow (Figure 30). The CO_2 in the outlet of regeneration is increasingly concentrated; in this case at >80% CO_2 in steam (Figure 31). There is a modest drop in loading which is now 0.72 wt% CO_2 but even less steam is required to capture each mole of CO_2.

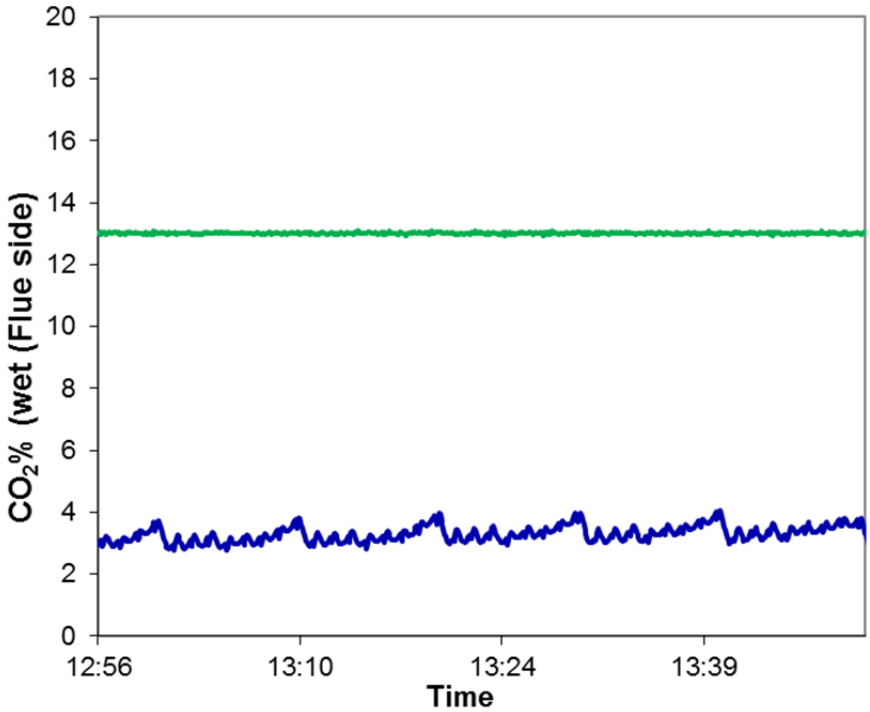

Figure 30. Inlet and outlet gas composition on flue side in multiple fixed bed apparatus for 70% Capture. Flue feed gas was 13.0% CO_2 and 4.2% H_2O. 80 sec cycles. 8/23/2012

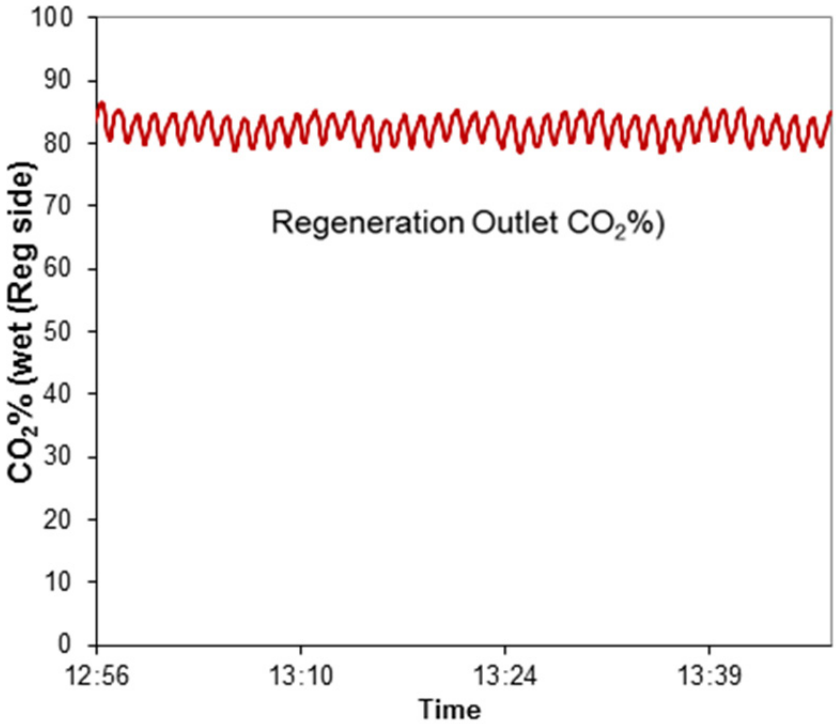

Figure 31. Percent CO_2 in regeneration outlet in multiple fixed bed apparatus for 70% Catpure . 105 sec cycles. Flue feed gas was 13.0% CO_2 and 4.2% H_2O. 80 sec cycles. 8/23/2012

4.2.5 Field Testing

An important goal of this PRDA project was to demonstrate the performance of TDA's sorbent-based CO_2 capture system in a post-combustion flue gas with all the associated contaminants. This task was conducted at Western Research Institute (WRI) in Laramie, WY. Here TDA's CO_2 capture system was evaluated with a real coal-derived flue gas from WRI's coal combustion test facility (CTF) (Figure 32). We performed testing at WRI for 2 weeks. The first week we did trouble shooting and shake down of the system integration. The second week we tested the sorbent continuously for over 100 hours of cycling. The sorbent characterized before and after field testing campaign at WRI and was essential unchanged. Tests demonstrated that TDA's CO_2 sorbent was able to achieve greater than 90% capture with a real coal derived flue gas.

Figure 32. Western Research Institute's Combustion Test Facility

WRI's CTF is a pilot-scale coal combustion system that simulates a pulverized coal-fired utility boiler. It is a balanced-draft system that was set up to simulate a tangential-fired power plant. It has a nominal coal firing capacity of 250,000 Btu/hour (about 20 lb/hour for a typical subituminous coal).

A schematic of the CTF is shown in Figure 33. The fuel feed system consists of screw-based feeders and pneumatic transport to four burners inserted in the corners of a refractory-lined firebox. The burners can be angled to attain different tangential flow characteristics in the firebox. The unit is equipped with appropriately sized heat-recovery surfaces such that the time/temperature profile of a utility boiler is replicated. These surfaces comprise water-cooled panels that simulate the waterwall, an air-cooled superheater, preheater, and two economizers. CTF includes provisions for preheating the combustion air to mimic a utility air preheater. The

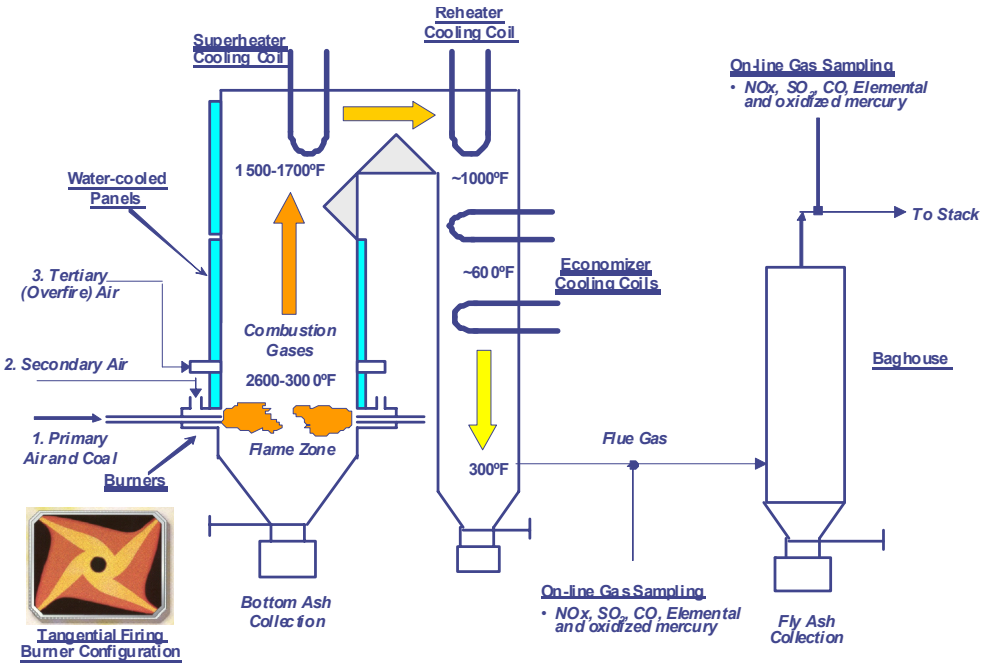

Figure 33. Schematic of Combustion test facility at WRI

system also includes over-fire air injection ports for combustion staging. The unit is equipped with two baghouses for continuous fly ash removal and for "clean" sampling under different steady-state operations.

Testing was performed with flue gas produced by burning Powder River Basin (PRB) Decker coal. The flue composition during testing was 11-14% CO_2, ~6% H_2O, 5-145 ppm NO, and 2-11 ppm NO_2 and 0-15 ppm SO_2. Typical SO_2 out of the combustor was 120 to 150 ppm. The SO_x was reduced upstream of TDA's system using a bicarbonate scrubber built by WRI. The flue gas pressure was 17 psi at the entrance of TDA's sorbents bed. WRI does not operate their CFT 24 hours a day so in order to provide flue gas to TDA continuously for 5 days flue gas was stored in pressurized gas cylinder for overnight testing. WRI measured the composition of the flue gas using a flue gas emission analyzer Testo 350 M/XL upstream and downstream of TDA's testing apparatus. TDA's system was integrated downstream of the CTF (Figure 34).

Figure 34. TDA's Bench-scale CO_2 capture apparatus at WRI during field test

An extended cycling testing was performed at WRI over 5 days with over 100 hours of testing. The results of the test are presented in Figure 35 which shows the sorbent loading and capture rate as a function of time. During the initial days of the test, cycling and operating conditions were optimized for the various feed compositions. For example, during the first day of testing the bed temperature was too high and the capture rate was lower. With optimization TDA's system was able to achieve 90% capture in the field. There were some variations in the data due to experimental fluctuations. For example, at several points the flue gas flow rate dropped which resulted in the CO_2 loading being reduced although the capture rate was very high.

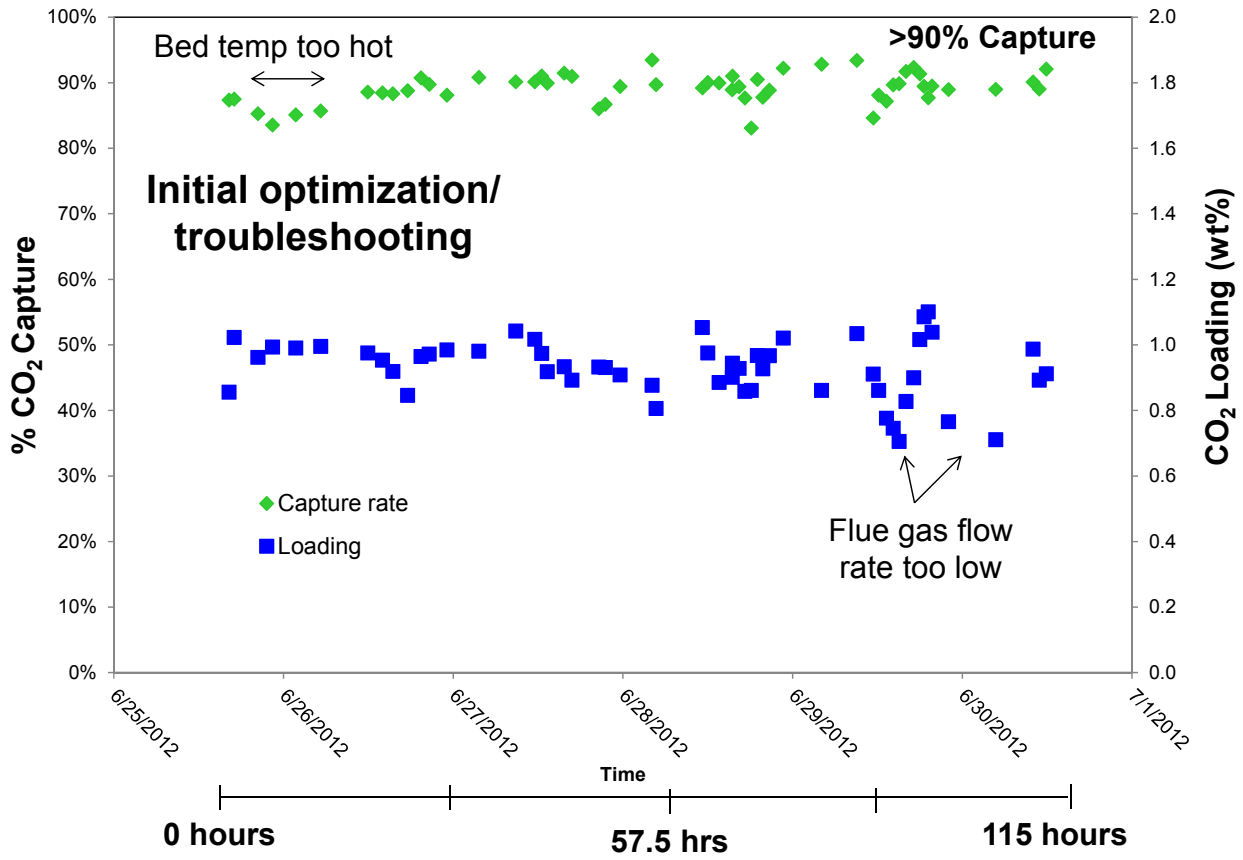

Figure 35. Extended cycling test at WRI with real coal derived flue gas

The flue composition in and out of the adsorber during Day 5 of the field test is shown in Figure 36. The flue CO_2 is reduced from 13.6% to 1.2%. The regenerator outlet has a concentration of about 33% CO_2 (Figure 37). These test points were performed at conditions similar to the extended cycling test done at TDA. The sorbent performance is also consistent with our prevrious results of 0.86 wt% CO_2 loading and 89% capture.

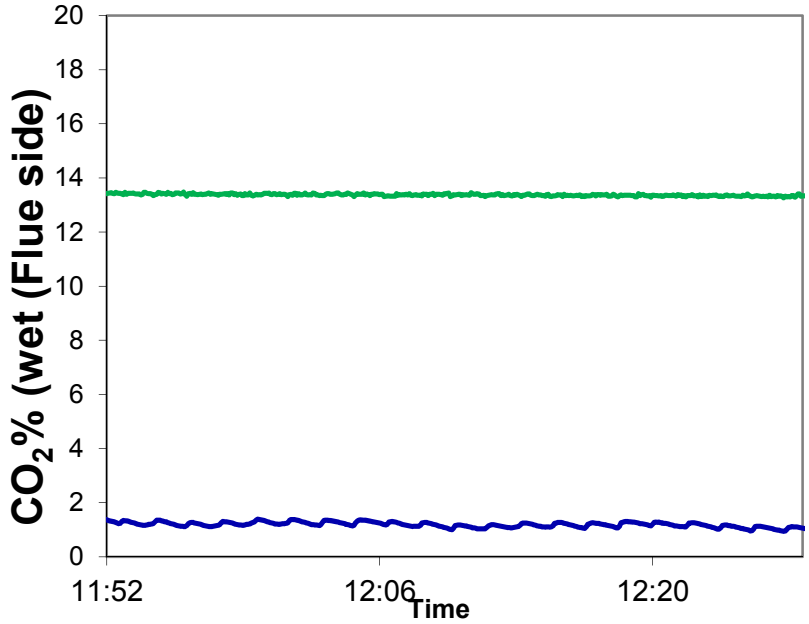

Figure 36. Inlet and outlet gas composition on flue side in multiple fixed bed apparatus during Day 5 of field test. Flue feed gas was 13.6% CO_2 and 6% H_2O. 105 sec cycles. 6/29/2012. 89% Capture

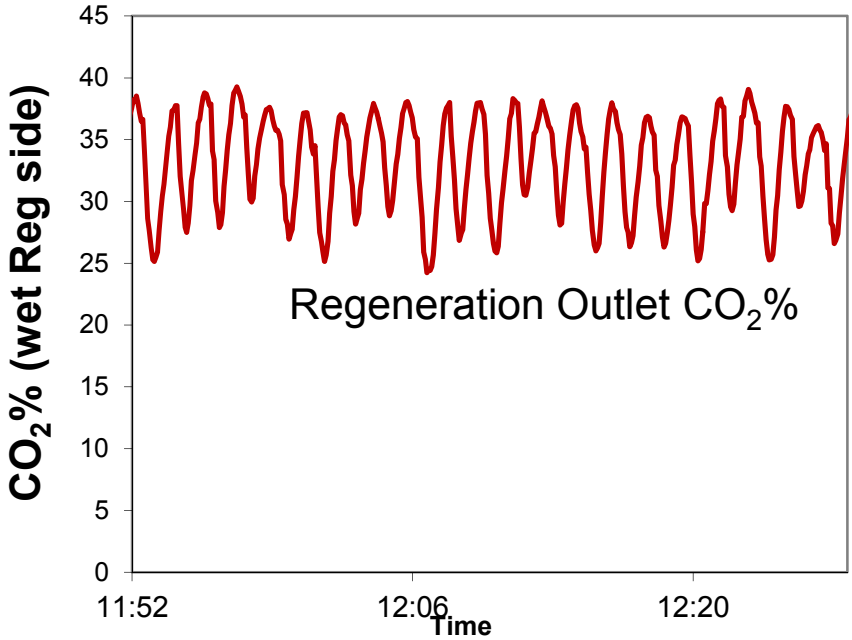

Figure 37. Percent CO_2 in regeneration outlet in multiple fixed bed apparatus during Day 5 of extended test at TDA. 105 sec cycles. 6/29/2012. 89% Capture

In important conclusion of both our earlier testing and the testing at WRI is that that CO_2 capture performance is strongly a function of operating conditions. By optimizing the operating conditions, the CO_2 recovery can be tailored for a particular gas feed. During day five (and

throughout the tests) we operated our unit at several different conditions in order to determine the performance as a function of operating parameters. The composition of the WRI flue gas was not the same as the gas composition we had run at TDA. During these tests we identified an operating condition where we were able to achieve even higher than 90% capture during the field test. These results are shown in Figure 38 and Figure 39.

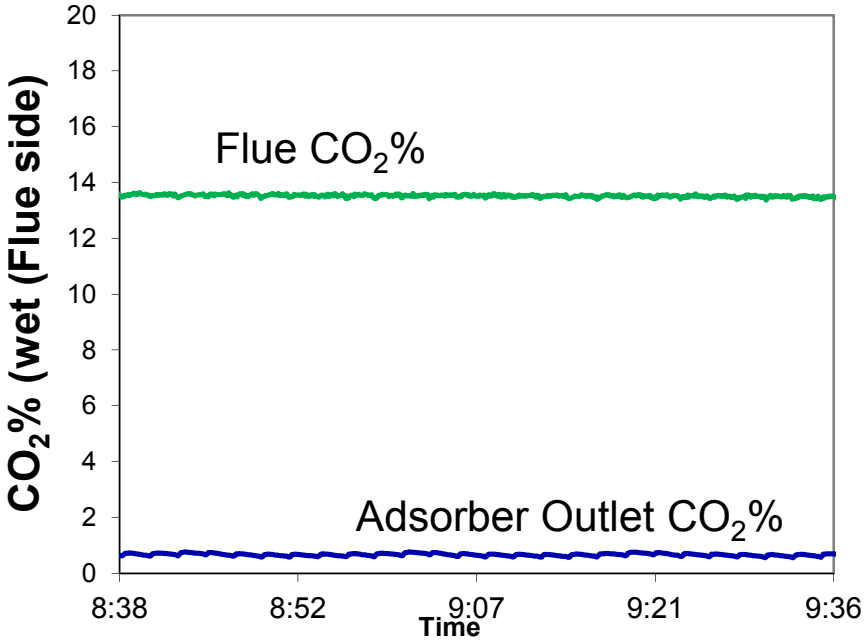

Figure 38. Inlet and outlet gas composition on flue side during Day 5 of field testing. Flue feed gas was 13.6% CO_2 and 6% H_2O. 135 sec cycles. 6/29/2012. 93% Capture

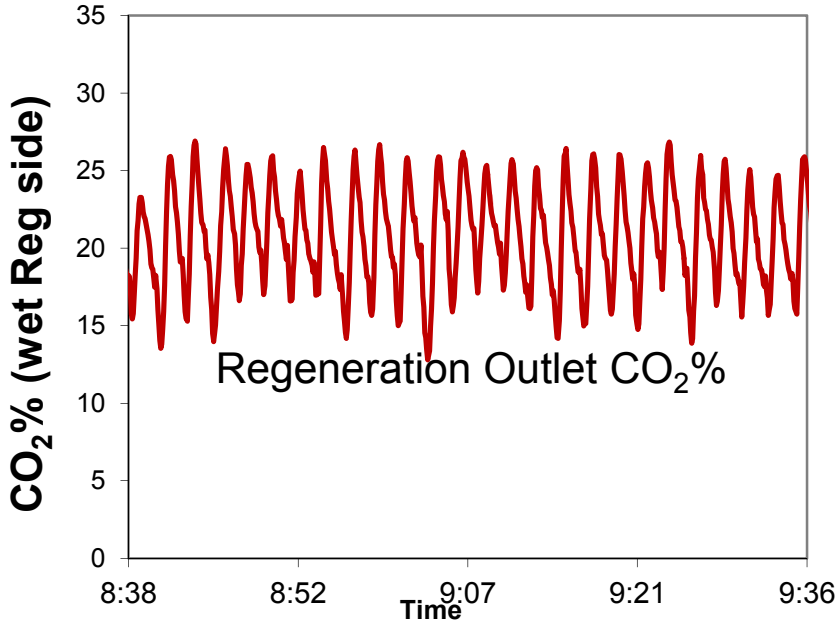

Figure 39. Percent CO_2 in regeneration outlet in multiple fixed bed apparatus during Day 5 of extended test at TDA. 135 sec cycles. 6/29/2012. 93% Capture

Here, we ran additional regeneration steam and increased the CO_2 loading to 1.03 wt% and the capture rate to 93%. Thus, we were successful in demonstrating TDA's CO_2 removal system on a real coal-derived flue gas. With optimized operating conditions we were able to achieve even greater than 90% capture.

The sorbent was characterized before and after the field testing campaign at WRI. The post-field testing characterization were carried out in this period. The results are shown Table 2. The physical properties of the adsorbent are essentially unchanged. The loading as measure in the bench-scale apparatus upon returning back to TDA and by TGA are consistent with the valve before the field test. The surface area and crush strength are also unchanged. The sorbent showed no degradation with repeated cycling under coal derived flue gas. We have therefore successfully demonstrated TDA's CO_2 removal system on a real coal-derived flue gas with all the associated contaminants

Table 2. Evaluation after field testing

Test	Initial Value	After Testing at WRI
Loading during cyclic test	0.82 wt%	0.86 wt%
Surface area (m^2/g)	75.6	83.8
Crush strength 1/8" pellets (lb_f/mm)	2.61	3.1
Total pore volume (cc/g)	0.42	0.45
Pore size (Å)	22.4	21.6

4.2.6 Summary of Bench-scale testing

To further demonstrate this process TDA constructed a bench-scale series fixed bed apparatus with eight 600 cc stainless steel fixed beds. The 8 bed apparatus can demonstrate CO_2 capture from the flue gas at a steady state. The absorption and regeneration functions operate simultaneously with the beds circulating between the absorption, regeneration and purge operations. Thus, the system allows continuous removal of CO_2 from a simulated flue gas. The system is configured to have the gases and solids moving (cycling) in a counter current direction.

The following were key results of the bench-scale testing:

- Steady state operation at near 90% capture was demonstrated in a 5 day , 24 hours a day continuous test
- Field testing at Western Research Institute was completed using coal derived flue gas
- The sorbent tested for over 100 hours in field testing and showed good performance with 90% CO_2 capture was demonstrated
- Sorbent characterized before and after WRI and was essentially unchanged after field testing at WRI
- We successfully demonstrated TDA's CO_2 removal system on a real coal-derived flue gas with all the associated contaminants.

4.3 Process and Sorbent Advancement

After successful completion of field testing TDA optimized the process and sorbent to even further advance this approach. The goals of the modification were to decrease pressure drop in the adsorber and decrease steam usage. New process improvements were tested by modifying the 8 bed operation and evaluating the new flow patterns in bench-scale testing. New sorbents were tested in our fixed bed apparatus to characterize their CO_2 loading and kinetics

4.3.1 Process Modifications

The 8 bed apparatus (Figure 18) was initially built with the adsorption and regeneration beds running in series (as shown in Figure 40). This allowed counter-current contact between the gases and solids. However, series flow has higher pressure drop. At this point in the project TDA modified the apparatus to have parallel flow during adsorption (Figure 41). Keeping regeneration in series is crucial to efficient steam usage. But running adsorption in series is not crucial The benefit of operating the adsorption beds in parallel is it could significantly reduce pressure drop and parasitic power requirements. The flue gas is the larger volumetric flow.

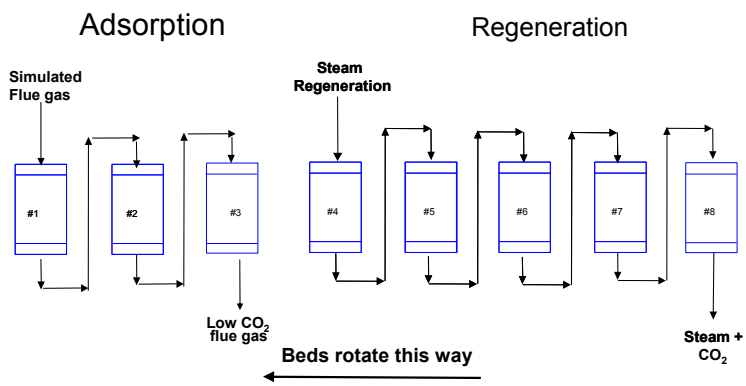

Figure 40. Multiple fixed beds in series. 8 bed apparatus

In the initial bench-scale unit design the direction of solids movement and gas flow movement was counter-flow but the adsorption and regeneration gases were co-flow (both down as shown

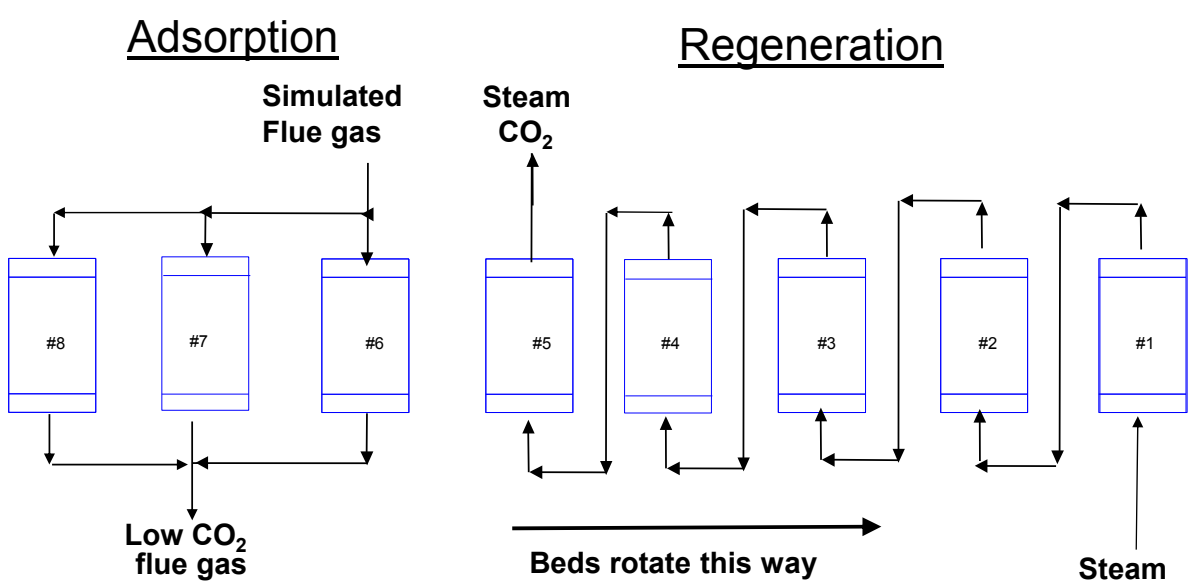

Figure 41. 8 Bed flow pattern with 3 adsorber bed in parallel flow and 5 regeneration bed in series flow. Adsorption feed (down) is counter flow with regeneration feed (up)

in Figure 40). It was constructed this way only for simplicity. During this process improvement effort, the system was modified to have the flow direction up in regeneration and down in adsorption (Figure 41). Now the gas flow direction between adsorption and regeneration is also counter-flow.

Other upgrades included installation of higher aspect ratio 600 cc beds (Figure 42) with higher superficial velocity, and installation of a mass spectrometer to monitor the flow composition directly at the exit of the beds.

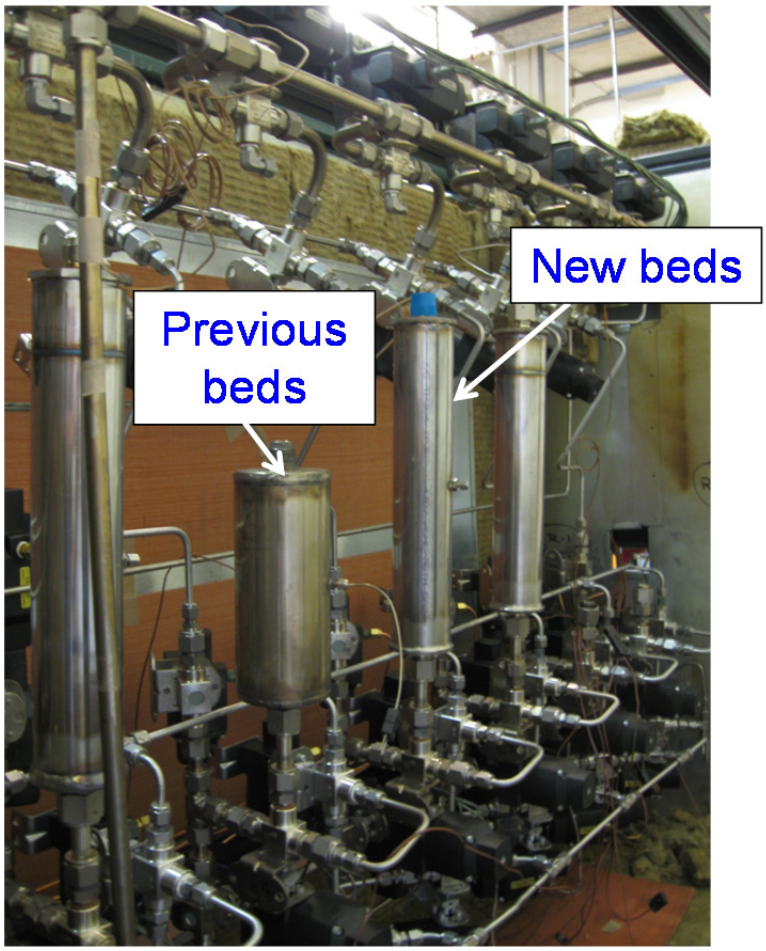

Figure 42. Installation of new 600 cc fixed beds (2.87" ID 5.5" bed length) with 5.7 L/D aspect ratio compared to previous beds (2.01" ID 11.5" bed length) with 1.9 aspect ratio in 8 bed apparatus.

Finally, we made modifications to allow us to explore several purging and recycling flow patterns. Previously, we had one bed operate in purge mode. After the modifications we can purge the adsorber bed with flue gas when it first comes online after regeneration; this pushes out the steam present in the void volume and recycles it back into the regeneration side. The purge step prevents the carry-over of steam from the regeneration side from exiting with the flue gas feed. The purge step is programmed to operate for a fraction of the cycle. This type of recycle process also was further explored for its ability to save some of the steam that is exiting the adsorbed bed. The purge gas can be recycle back into the front or the back of the regeneration stages.

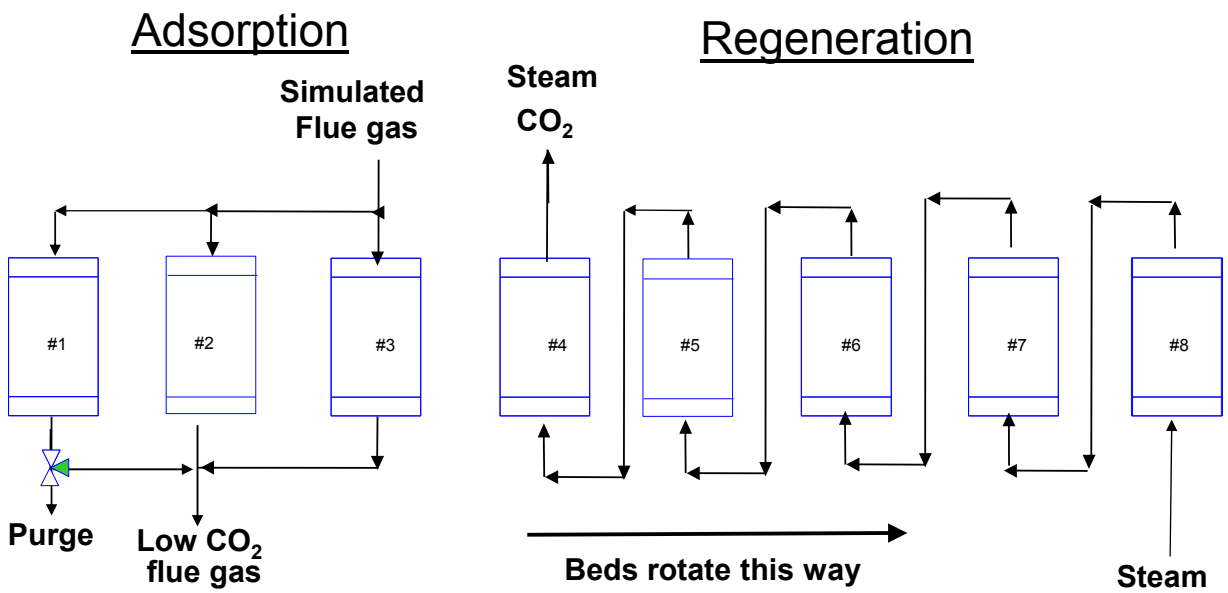

Figure 43. Steam Saver where bed that just transfer from regeneration to adsorption is purged with flue gas and recycle back to regeneration side at the beginning of the cycle.

4.3.2 Process Evaluation

The new flow configurations were evaluated in the upgraded apparatus. Test were conducted with simulated coal flue gas was ~13% CO_2 and %6 H_2O. In this study we also explored varying numbers of beds in adsorption and regeneration. A summary of the important test conditions evaluated is shown in Table 2.

Table 2. Summary of 8 Bed Test Results

# Adsorption Beds	# Regeneration Beds	Purge of regen bed before adsorption	Loading, wt%	Capture Rate %
2	6	No	0.82	88.3%
3	5	No	0.83	90.3%
4	4	No	0.83	88.7%
3	5	Yes	0.86	91.7%

With the upgraded 8 bed apparatus, we first operated it with 3 adsorption beds in parallel in and 5 regeneration beds in series. The new system configuration was able to achieve 90% capture even with the adsorber beds in parallel. The capture rate was 90.3% with a CO_2 loading capacity of 0.83 wt%. This is similar to previous results with the adsorption beds in series. It was expected that operation of adsorption in parallel would reduce the capture rate and/or CO_2 loading capacity. It appears that the benefit of running the adsorption and regeneration gas flows counter flow (with the steam up and flue gas down) offsets the loss of performance from parallel operation. The important results of these tests we were able to still achieve 90%

capture, but with only 1/9 of the pressure drop (for the 3 adsorber beds case).

The results with 4 beds in adsorption (parallel) and 4 beds in regeneration (series) were very similar to 3 and 5 beds in adsorption and regeneration, respectively. The capture rate was slightly less at 88.7%, but the CO_2 loading was identical at 0.83 wt%.

Since 3 beds in adsorption and 5 beds in regeneration was better than 4 beds in adsorption and 4 beds in regeneration, we wondered if a larger fraction of beds in regeneration would be even more beneficial. Thus, next we ran 2 beds in regeneration and 6 beds in adsorption. The flow rates and cycle time remained the same. This configuration resulted in a 88.3% capture rate again slightly less than 3 beds in regeneration and 5 beds in adsorption. The CO_2 loading again was similar at 0.82 wt%. Thus, it appears there is slightly optimum at the 3 + 5 configuration, but the difference is small.

The apparatus is also configured so that we can purge the regeneration bed before it comes online to adsorption. We use the flue gas to displace one bed volume the regeneration gas back into the regeneration side. Previously, this was performed with the bed in purge mode for an entire cycle (running a very low flow rate of purge gas). With the new configuration, the purge is performed for part of the cycle rather taking a bed off line the entire cycle time. The beds then run in adsorption mode the remainder of the time. With the purge configuration, the capture rate is 91.7% and CO_2 loading is 0.86 wt%. These results are similar to the results at the WRI field test, where we also ran a purge.

In our last process experiment we evaluated another steam saving process design. Specifically,

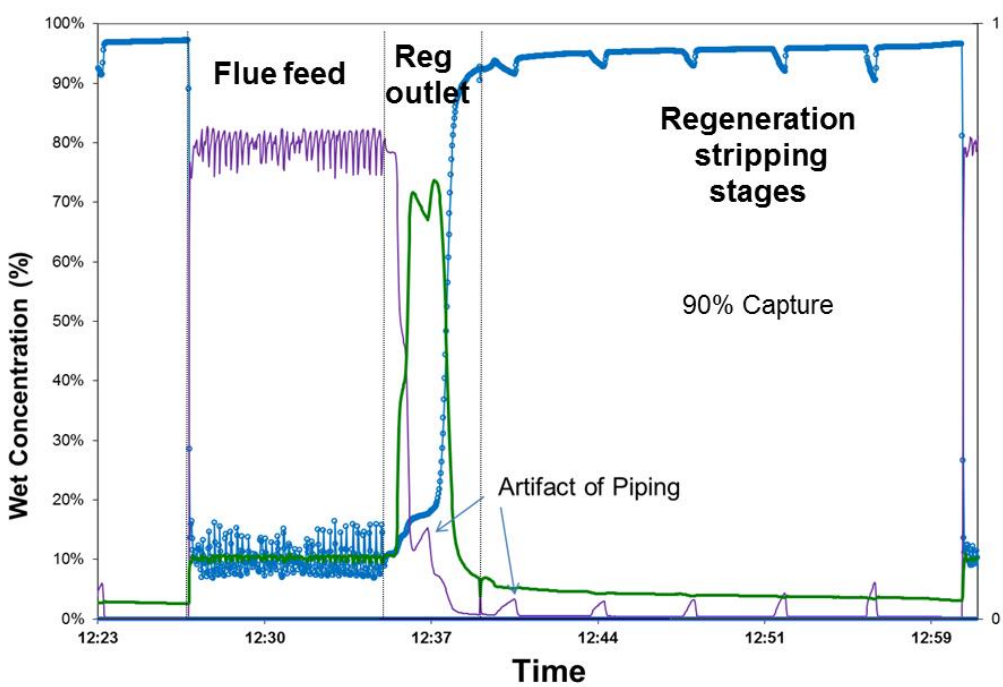

Figure 44. Mass spectrometer measurement of top of reactor bed. During adsorption it measure the flue gas feed and during regeneration it measure the regeneration outlet and concentration during in regeneration bed during stripping

we looked at recycling the purge gas into the front of the regeneration stages. The goal of this process design is to transfer steam lost to the adsorption side back to the regeneration side. In these experiments we installed a mass spectrometer on the beds to monitor the outlet the of the regeneration gases. The capture rate during this test was 90%. Despite running a recycle of flue gas into the exit regeneration bed, the product CO_2 is not diluted (Figure 44). The CO_2 is release in very high concentration. Moreover, the steam usage in this configuration decreased by 20%.

4.3.3 Sorbent Improvement

Along with efforts to advance the process TDA also continued to optimize the sorbent. The new sorbent materials are their promising in terms of their increased CO_2 capacity and decreased water usage. Additional optimization is ongoing to ensure the materials maintain their stability with repeated cycling.

A number of new adsorbent materials were developed and evaluated in our fixed bed (300 cc) apparatus under simulated coal gas flue gas conditions (13% CO_2, 8% H_2O) at 180 °C with 100% steam regeneration (Figure 45). The best of the new adsorbents (M-05 & M-06) had a loading 1.99 wt% and 1.89 wt% compared to 1.08 wt% of TDA's baseline formulation (run under the same conditions) (Figure 46). This is more than a 70% increase in the dynamic CO_2 capacity over the baseline sorbent. Further the new adsorbents had lower regeneration steam requirements; the new sorbents had a 30 to 45% lower parasitic steam usage in regeneration.

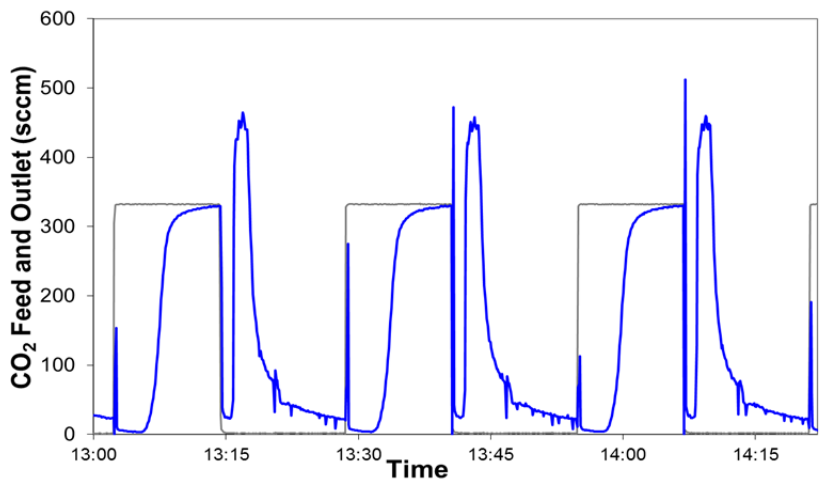

Figure 45. Fixed bed cycling of M-05 sorbent under simulated f

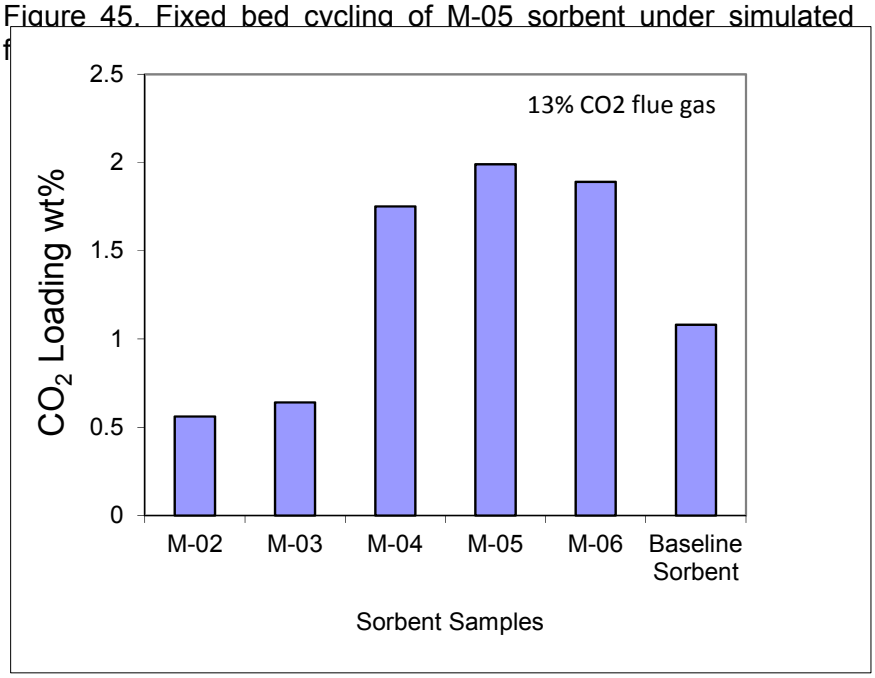

Figure 46. CO_2 loading capacity new sorbents (M-02 through M-06) and TDA's previous baseline formulation (GG1002-6)

We conducted cycle tests as a function of superficial gas velocity (in terms of space velocity) and found that the new sorbent has faster rates of adsorption and desorption (Figure 47), and could be operated at

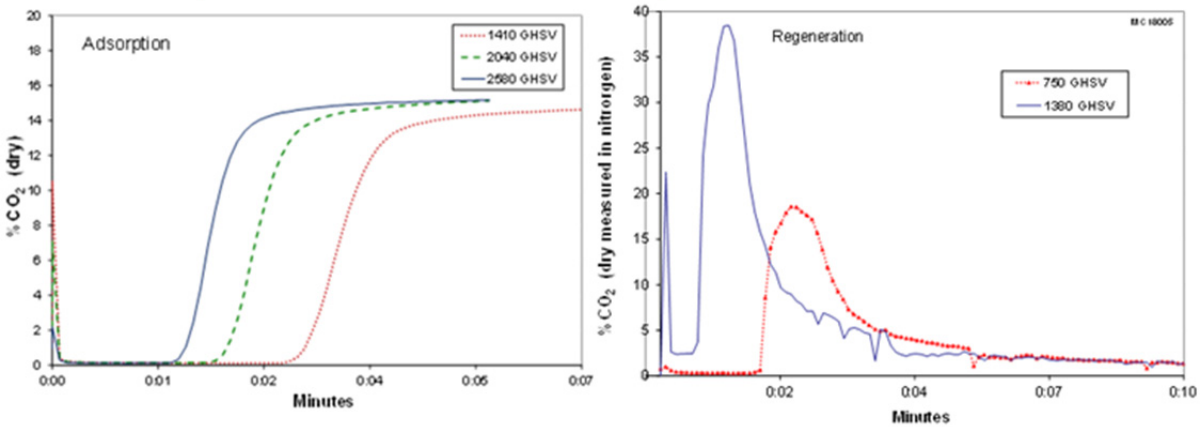

Figure 47. Impact of superficial gas velocity on breakthrough (left) and regeneration rates (right)

three times the gas velocity pf our baseline sorbent. Improving the kinetics and increasing the space velocity reduces the size of the beds which decreases both capital cost and pressure drop (blower power cost). This testing was performed on sorbent M-05. Additional testing on sorbent M-06 is planned, but expected to be similar. Both M-05 and M-06 have higher surface area and higher alkali loadings compared to the baseline sorbent, and thus their improved kinetics is not surprising.

The heat of absorption for the improved sorbent, was calculated to be 2.6 kcal/mole at higher CO_2 concentrations (7 to 13%) and 10.3 kcal/mole at lower CO_2 concentrations (2-7%), which is very close to the baseline sorbent. The isotherm data (Figure 48) also show a higher CO_2 equilibrium weight loading of 4.1 wt% (0.93 gmole/kg) at 160°C compared to the baseline sorbent at 2.0 wt% (0.45 gmole/kg).

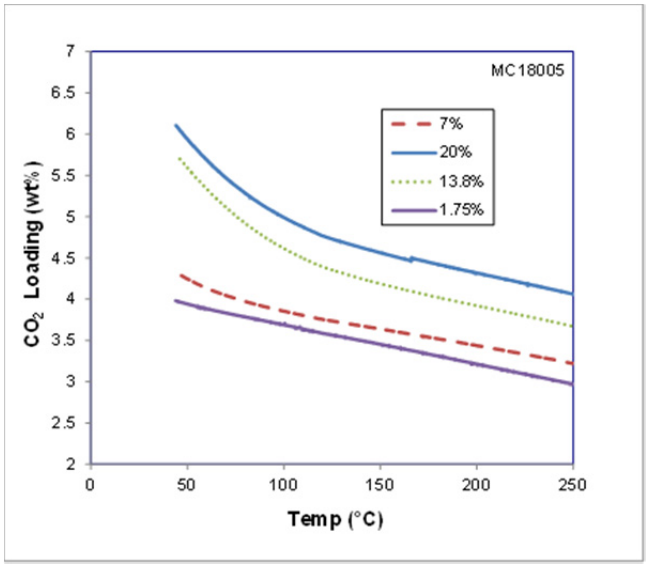

Figure 48. Isotherms for improved sorbent

4.3.4 Summary on Process and Sorbent Advancement

Advances in the process configuration were developed and tested in the 8 bed bench-scale apparatus. This system operates with continuous capture of CO_2 on the flue gas and continuous regeneration of the sorbent. Improvements included parallel flow in the adsorption beds (rather than series to reduce pressure drop), counter current flow of the regeneration and adsorption gases, and installation of higher aspect ratio beds. Experiments were run with three beds in adsorption and 5 beds in regeneration, 4 beds in both adsorption and regeneration, and 2 beds in adsorption and 6 regeneration. These tests were all run with the flow through the adsorption beds in parallel. Results showed that 90% capture (with lower pressure drop) could still be achieved the adsorption in parallel, and that 3 beds in adsorption and 5 in regeneration was the optimum configuration. With 3 beds in adsorption the pressure drop is reduced by a factor of 9. Additionally, a recycle/purge flow pattern was developed which reduced steam usage by 20%.

Along with efforts to advance the process TDA also continued to optimize the sorbent. New sorbent materials are their promising in terms of their increased CO_2 capacity and decreased water usage. They had a more than a 70% increase in the dynamic CO_2 capacity over the baseline sorbent. Further the new adsorbents showed 30 to 45% lower regeneration steam requirements. Additional optimization is ongoing to ensure the materials maintain their stability with repeated cycling.

4.4 Reactor Bed Design

There are many types of counter-flow bed designs that could be employed in this process. Figure 49 shows one configuration, which was the basis of the analysis performed by NETL (Stevens 2012). This study assumed use of circulating moving beds to provide counter current contact between flue gas (during adsorption) and steam (during regeneration) with the sorbent.

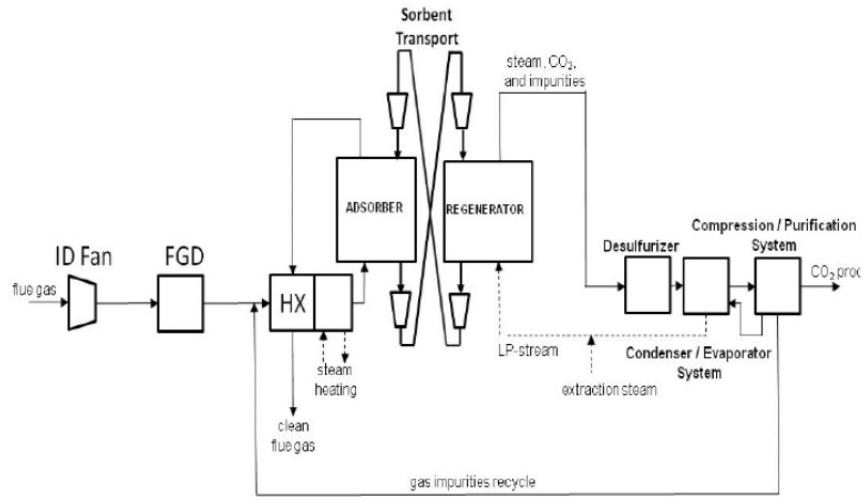

Figure 49. TDA's CO_2 capture process using counter-current moving beds (Stevens 2012)

The counter flow moving bed can also be a rotating moving bed where the sorbent is stationary inside a vessel which itself rotates such that the gas flows across it is in a counter-flow manner to the solids (Figure 50). The mechanics of the counter current wheels are not new; they have long been used in power plants as regenerative heat exchangers for preheating combustion air (e.g. Ljungström® air preheaters). A rotating bed is essentially equivalent to multiple fixed beds, and the flow is controled using sliding seals instead of valves. Two such rotating wheel designs are shown in Figure 50.

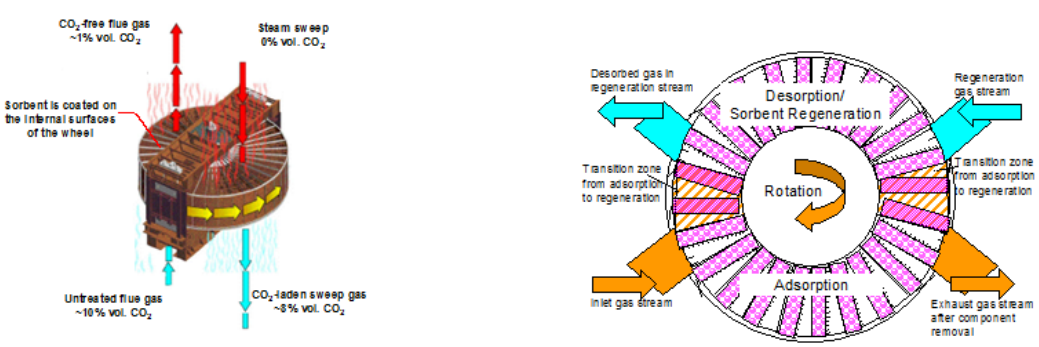

Figure 50. Rotating wheel bed designs

In summary, TDA has evaluated at various adsorber configurations including packed beds,

circulating moving beds, and rotating beds. The rotating bed or packed bed design are essentially stacked fixed beds and have the advantage that they minimize solids handling, which also minimizes sorbent attrition, and consequently requires less sorbent makeup than a circulating system. B&W's economic analysis was based on a rotating wheel design. Currently, we favor the packed bed design because we can run the adsorber beds in parallel to reduce pressure drop and the regeneration beds in series to maximize the regeneration while reducing steam usage. It also allows us to make greater use of bed cycling operations, including purge and recycling options.

4.5 System and technical economic analysis

A system and economic analysis of this process was done by B&W using an ASPEN Plus model based on retrofitting AEPs 433.7 MW_e subcritical Conesville #5 plant (Ramezan 2007). This analysis was performed earlier in the project (in Budget Period 2 and 3) and was based on TDA's original process design and sorbent. In the last budget period of this project we improved both the process and the sobent. Based on B&W's sensitivity analysis, we recalculated the economics, taking credit for the reduced steam requirement and increased kinetics. Additionally, we performed an initial analysis of TDA's CO_2 capture when integrated with a 550 MW_e greenfield supercritical plan.

4.5.1 Analysis with retrofit of existing subcritical power plant

A system and economic analysis of this process has been performed by the Babcock and Wilcox Power Generation Group (B&W) using an ASPEN plus model. This analysis was based on retrofitting AEP's Conesvile #5 (Ramezan 2007) with TDA alkalized alumina adsorbent process to achieve 90% capture. This is a 433.7 MW subcritcal pulverized coal plant. This analysis was based on experimental results on TDA's original sorbent (GG855-37/GG1002-6) with our original process.

As part of the techno-economic analysis, B&W's developed an ASPEN Plus model of AEP's Conesville #5 plant described in (Ramezan 2007) with and without CO_2 capture by TDA's process. The process simulation encompasses the combustion process, flue gas treatment process such as flue gas desulfurization, the steam turbine cycle, TDA's CO_2 capture process, and purification and compression process. B&W developed a plant layout with general arrangement drawings for the components and developed a cost estimate for all the equipment. Several reactor designs were considered including circulating moving beds, packed beds and rotating beds. B&W based their design on rotating beds for the adsorper/desorber unit.

<u>Overall Heat and Material Balance for 433.7 MW subcritical plant</u>

The overall heat and material balance was simulated using Aspen Plus, first for the no capture base case and then with TDA's carbon capture process. The process flow diagram (PFD) for the base case is shown in Figure 51. The PFD summarizes the streams and main components involved on the combustion and flue gas cleanup side of the process (gas side). First, the steady state simulation of the no capture process was set up and calibrated such that the model would be representative of the Base Case model of the plant. This steady state model provides the mass and energy balance related to coal processing (PC mill and primary air flow), the boiler island involving the combustion and heat extraction processes as well as around flue gas cleanup equipment. The system includes and SCR for NOx reduction, an ESP for particulate control and a Wet Flue Gas Desulfurization (WFGD) system for the control of mainly sulfur

species. The flowsheet also includes the Induced Draft (ID) Fan, a Forced Draft (FD) fan on the secondary air delivery side and a Primary Fan (PA) on the primary air side. The main flowsheet shows the Steam Turbine Cycle hierarchy block which is connected to a heat stream. Heat extracted from the boiler is integrated into the steam turbine cycle.

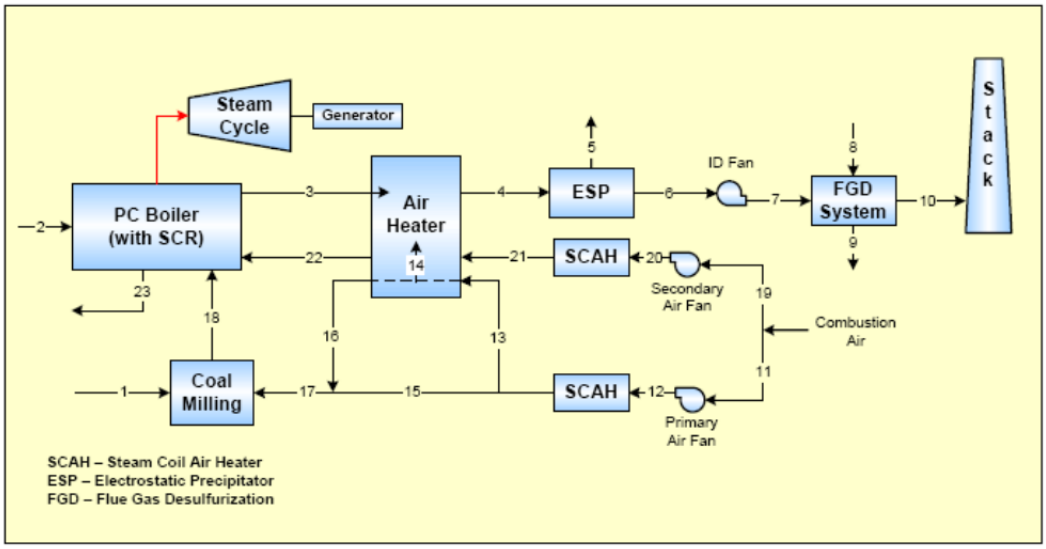

Material Flow Stream Identification

1	Raw Coal to Pulverizers	9	FGD System Solids to Disposal	17	Mixed Primary Air to Pulverizers
2	Air Infiltration Stream	10	Flue Gas to Stack	18	Pulverized Coal and Air to Furnace
3	Flue Gas from Economizer to Air Heater	11	Air to Primary Air Fan	19	Secondary Air to Forced Draft Fan
4	Flue Gas Leaving Air Heater to ESP	12	Primary Air to Steam Coil Air Heater	20	Secondary Air to Steam Coil Air Heater
5	Flyash Leaving ESP	13	Primary Air to Air Heater	21	Secondary Air to Air Heater
6	Flue Gas Leaving ESP to Induced Draft Fan	14	Air Heater Leakage Air Stream	22	Heated Secondary Air to Furnace
7	Flue Gas to Flue Gas Desulfurization System	15	Tempering Air to Pulverizers	23	Bottom Ash from Furnace
8	Lime Feed to FGD System	16	Hot Primary Air to Pulverizers		

Figure 51. Gas Side Process Flow Diagram – Conesville #5 (Ramezan 2008)

A process model was created in Aspen Plus for the no capture base case. The model consists of a High Pressure Turbine, an Intermediate Pressure Turbine and a Low Pressure turbine, each broken down in multiple stages to incorporate the appropriate number and points of steam extraction. The number of heat exchangers, deaerator, boiler feed pump location, reheat conditions and steam extraction to drive the feedwater pump via the boiler feed pump turbine (BFPT) have been configured in the same manner as the turbine balance for the Conesville plant.

Table 3 summarizes the key parameters of the turbine balance. The table compares the parameters used in the Conesville report to those used in the model. Most parameters match closely. The Gross Power output for our model is very close to that in the Conesville report with the new model resulting in a Gross Power Output of 463.603MWe compared to 463.478MWe in the Base Case Analysis of the Conesville Study.

Table 3. Key Parameters: Comparison of published Conesville #5 plant with model no capture case (Base Case)

Key Parameters	Units	Conesville Report	New Model
Live steam pressure	psia	2535	2535
Live steam temperature	^{o}F	1000	1000
Live Steam Flow	lbm/hr	3131619	3131620
Steam for air pre-heating	lbm/hr	0	0
RH de-superheating spray	lbm/hr	85827	85827
Backpressure	In. Hg abs	2.5	2.5
Power Output	KW	463478	463603

Figure 52 shows the Aspen Plus flowsheet that incorporates the additional systems that are relevant to the TDA CO_2 capture system. The base Conesville #5 model has been adapted to include a second Flue Gas Desulphurization system, the CO_2 Capture system and the CO_2 compression system. The Steam Turbine Cycle has also been modified such that it provides the steam required for the CO_2 regeneration system.

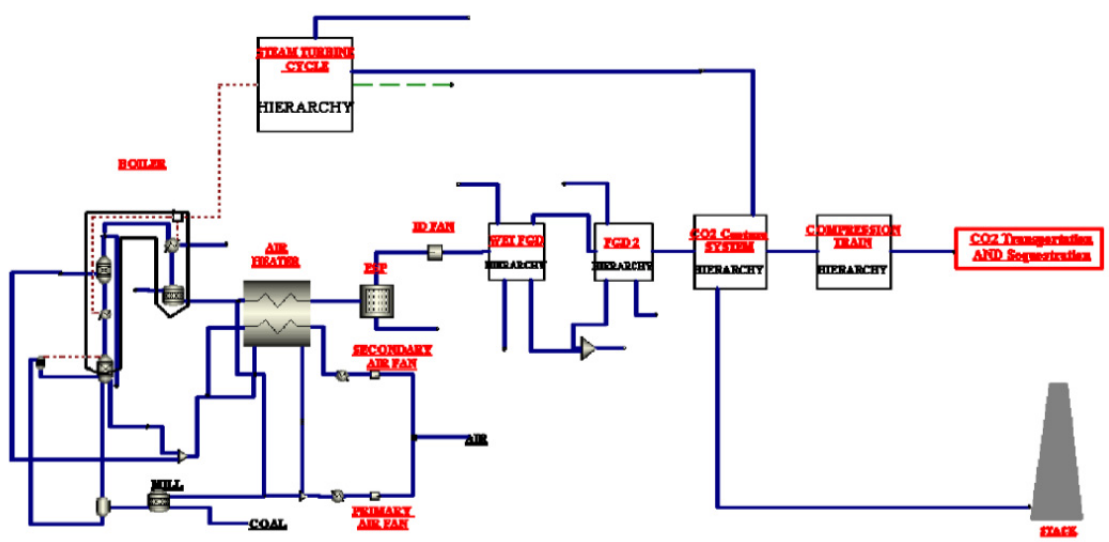

Figure 52. Process flow diagram with CO_2 capture and compression

Plant Layout for integration for subcritical plant

Figure 53 shows a schematic of plant layout that uses rotating wheel adsorbers. Flue gas from the main boiler first goes through a regenerative gas-gas heat exchanger whereby the flue gas leaving the second scrubber is heated. The gas is then sent to forced draft fans that boost the pressure in order to make up for system pressure losses due to the addition of the CO_2 capture system. The figure also shows a small regenerative heat exchanger used to transfer heat between the steam-CO_2 mixture leaving the desorber and the steam being sent into the

desorber.

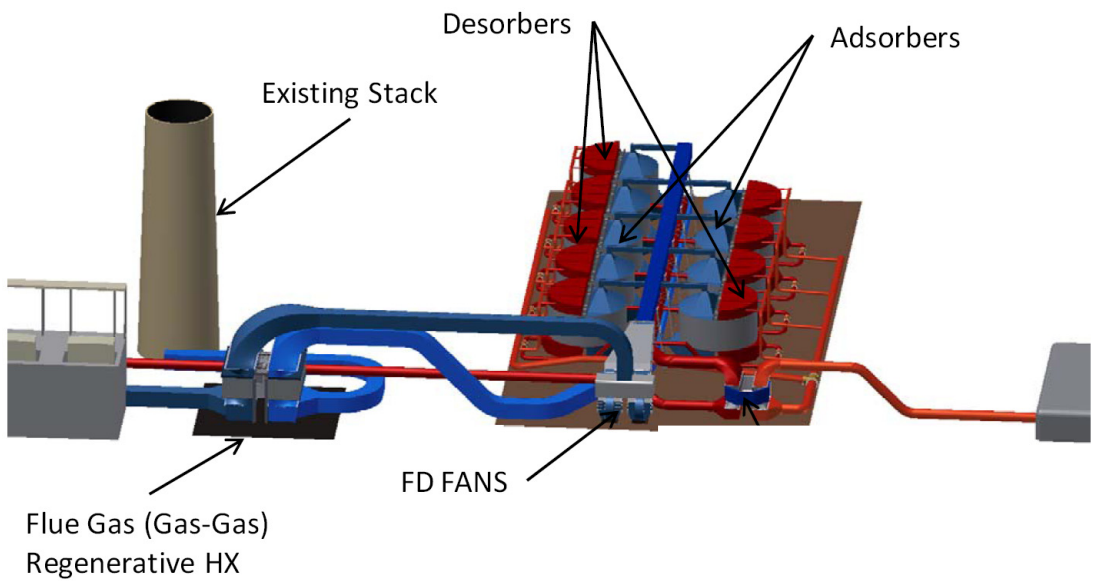

Figure 53. Plant layout of TDA's CO_2 adsorber-desorber system

TDA used the sensitivity analysis provided in B&W's report to determine the economics of the improved sorbent and process as integrated into AEP Conesville #5 plant. TDA's process with the original sorbent and process flow configuration would decrease the net energy output of Conesville #5 by 28.7%, which is a modest improvement over amines which reduces the plant output by 30% (Ramzean 2007). However, the newly developed sorbents and process designs for this CO_2 capture system have considerably better performance. The new process reduced steam usage by 20% and the new sorbent has a 70% increase in CO_2 capacity, 30 to 45% decreased steam parasitic usage and excellent kinetics.

Table 4 gives the plant performance of TDA's CO_2 removal system as a function of different regeneration steam requirements. Based on the performance of improved process and sorbent, we calculated a total steam consumption to be 3.25 moles of steam to mole of CO_2 captured. From on the sensitivity analysis in Table 4, we calculate the new adsorbent and process will have a plant power output of 333.9 MW compared to 303.3 MW for amines (Ramzean 2007).

Table 4. B&W Sensitivity Analysis on Plant Performance as function of Regeneration System Requirement based on retrofitting Conesville #5 subcritical PC plant

Table 8 Plant Performance Summary: Sensitivity Analysis on Case with varying regeneration steam requirement

SENSITIVITY ANALYSIS	units	S0 (Case 2)	S1	S2	S3	Base Plant
Boiler Parameters						
Main Steam Flow	lbm/hr	3131619	3131619	3131619	3131619	3131619
Reheat Steam Flow (to IP Turbine)	lbm/hr	2853589	2853589	2853589	2853589	2853607
Main Steam Pressure	psia	2535	2535	2535	2535	2535
Main Steam Temperature	F	1000	1000	1000	1000	1000
Reheat Steam Temperature	F	1000	1000	1000	1000	1000
Flue Gas Flow Leaving Economizer	lbm/hr	4014120	4014120	4014120	4014120	4014743
Flue Gas Temperature Leaving Air Heater	lbm/hr	311	311	311	311	311
Coal Heat Input (HHV)	mmBtu/hr	422872	422872	422872	422872	4228.7
CO_2 Removal System Parameters and Steam Requirements						
CO_2 Captured	lb/hr	779394	779394	779394	779394	
CO_2 Captured	%	90	90	90	90	
Steam:CO_2 Captured	mole ratio	4.9	4	3	2	
Steam adsorbed in Regen:CO_2 Captured	mole ratio	2.9	2.9	2.5	1.8	
Steam Cycle Parameters						
Generator Output (kW)	kW	390501	403928	418847	433766	463478
Letdown turbine output	kW	0	0	0	0	0
Auxiliary Power Requirements (kW)						
Condensate Pump Power	kW	504	504	504	504	563
Condenser Coolng Water Pump Power	kW	5679	5679	5679	5679	5560
Boiler Island Auxiliary Power (Fans & Pulverizers)	kW	7753	7753	7753	7753	7753
Coal & Ash Handling System	kW	1020	1020	1020	1020	1020
FGD & ESP System Auxiliary Power	kW	8157	8157	8157	8157	8157
Misc. Auxiliary Power (lighting HVAC, TRANS etc.)	kW	6645	6645	6645	6645	6645
CO_2 Removal System Parasitic Power Consumption (kW)						
Wash Water Pumps	kW	210	210	210	210	
Direct Contact Cooler Water Pump	kW	359	359	359	359	
Filter Circ. Pump	kW	85	85	85	85	
CO_2 Pipeline Pump	kW	1560	1560	1560	1560	
LP Condensate Booster Pump	kW	434	434	434	434	
Soda ash metering Pump	kW	0	0	0	0	
Flue gas FD Fan	kW	7496	7496	7496	7496	
CO_2 Compressor	kW	22882	22761	22664	22607	
Compressor 1	kW	*8293*	*8171*	*8074*	*8017*	
Compressor 2	kW	*7608*	*7609*	*7609*	*7609*	
Compressor 3	kW	*6981*	*6981*	*6981*	*6981*	
Propane Refrigeration Compressors	kW	18306	18306	18306	18306	
CO_2 Dryer Package	kW	292	292	292	292	
Steam FD Fan	kW	0	0	0	0	
CO_2 Removal System Parasitic Power Total	kW	***51624***	***51503***	***51406***	***51349***	
Total Aux Power	kW	81382	81261	81164	81107	29698
Net Plant Output	**kW**	**309119**	**322667**	**337683**	**352659**	**433780**

The economic analysis calculated a capital cost for TDA's system at $63.9 million dollars. The analysis also included the cost of purchasing make-up power to keep the total output the same. Cost of transportation, storage, and monitoring sequestered CO_2 were not included. The cost of CO_2 capture and cost of CO_2 avoided is shown in Table 5 as function of the regeneration stream requirements per mole of CO_2 captured. With the performance of original and process sorbent, the cost of CO_2 capture for retrofitting Conseville #5 subcritical PC plant is $59.26 per tonne. With the decreased steam consumption with the new process and sorbent the cost would be reduced to $52.94 per tonne captured, which is a reduction of $6.32/tonne.

This improved adsorbent also shows faster kinetics; it does have a higher surface area. With recent optimizations to the process design and improved performance we will be able to run higher space velocities and still maintain 90% capture; this will decrease the size of the sorbent beds The increased space velocity (without any credit decreased regeneration steam requirement) will decrease cost of CO_2 capture cost by $7.59/tonne to $51.57/tonne captured (Table 6). Combining the two effects (decreases steam and increase space velocity) could

reduce the cost of CO_2 capture by $13.91/tonne (to $45/tonne) assuming the effects are additives as a rough approximation.

Table 5. B&W Sensitivity Analysis on Steam Regeneration Requirement on cost of CO_2 capture based on retrofitting Conesville #5 subcritical PC plant

LEVELIZED COST OF ELECTRICITY					
CASE:	Sensitivity Analysis -Steam Extraction				
	Cost Case				
		S0 (Case 2)	S1	S2	S3
	Levelization Factors	TDA	TDA	TDA	TDA
Existing Steam Generator Output (MW)		433.78	433.78	433.78	433.78
Power Lost Due to Steam Extraction (MW)		72.98	59.55	44.63	29.71
LDT Generator Power Output (MW)		0.00	0.00	0.00	0.00
Aux Power TDA System (MW)		51.62	51.50	51.41	51.35
Net Generator Output (MW)		309.2	322.7	337.7	352.7
Capacity Factor		85.0%	85.0%	85.0%	85.0%
Property Taxes ($1000's)		$ -	$ -	$ -	$ -
Total Investment Cost ($1000s)		$ 441,697	$ 431,636	$ 418,956	$ 404,703
Total Investment Cost ($/net kW)		$ 1,429	$ 1,337	$ 1,240	$ 1,147
Annual Debt Service to Fund Initial Capital ($1000's)		**$ 77,297**	**$ 75,536**	**$ 73,317**	**$ 70,823**
Fixed Operating & Maintenance Costs ($1000s)		**$ 1,269**	**$ 1,269**	**$ 1,269**	**$ 1,269**
Cost of Purchased Make-Up Power if Applicable ($1000s)		$ 59,378	$ 52,922	$ 45,766	$ 38,629
Cost of Auxilliary Steam Generated ($1000s)		$ -	$ -	$ -	$ -
Other Variable & Maintenance Costs ($1000s)		$ 10,977	$ 10,827	$ 10,636	$ 10,423
Total Variable Operating & Maintenance Costs ($1000s)		**$ 70,355**	**$ 63,748**	**$ 56,402**	**$ 49,052**
Consumable Operating Costs ($1000s)		**$ 4,438**	**$ 4,013**	**$ 3,384**	**$ 2,809**
Transportation Storage and Monitoring ($1000s)		$ -	$ -	$ -	$ -
LEVELIZED COST OF ELECTRICITY					
Levelization Basis (MW)		309	323	338	353
Lifecycle (years)		20	20	20	20
Property Taxes on Purchased Property		**0.000**	**0.000**	**0.000**	**0.000**
Fixed O&M (¢/Kw-hr)	1.157	0.06	0.06	0.06	0.06
Variable O&M (less Make-Up Power and Aux Steam) (¢/Kw-hr)	1.157	0.55	0.52	0.49	0.46
Auxilliary Steam if generated (¢/Kw-hr)	1.157	0.00	0.00	0.00	0.00
Make-Up Power if Purchased (¢/Kw-hr)	1.000	2.58	2.20	1.82	1.47
Consumables (¢/Kw-hr)	1.157	0.22	0.19	0.16	0.12
Transportation Storage and Monitoring (¢/Kw-hr)	1.157	0.00	0.00	0.00	0.00
Total Additional Production Cost, (¢/kW-hr)		**3.42**	**2.98**	**2.52**	**2.11**
Capital Cost (¢/Kw-hr)	0.175	**3.36**	**3.14**	**2.92**	**2.70**
CO2 Credits (¢/kWhr)	1.000	**0.00**	**0.00**	**0.00**	**0.00**
Incremental LCOE, (¢/kWhr)		**6.78**	**6.12**	**5.44**	**4.81**
CO_2 COSTS					
CO_2 Captured (lb/hr)		779361	779361	779361	779361
CO_2 Emitted (lb/hr)		86596	86596	86596	86596
CO_2 Removed w/o TS&M ($/ton)		**53.76**	**50.69**	**47.14**	**43.50**
CO_2 Removed w/o TS&M ($/tonne)		**59.26**	**55.88**	**51.96**	**47.95**
CO_2 Avoided w/o TS&M ($/ton)		**78.96**	**70.85**	**62.51**	**54.90**
CO_2 Avoided w/o TS&M ($/ton)		**87.03**	**78.10**	**68.91**	**60.52**

Thus, TDA's process has a cost of CO_2 capture of $45/ tonne for TDA system on retrofit of subcritical plant compared to $59/ tonne for amines (DoE/NETL-401/110907). It increases the the LCOE to 4.77 ¢/kWhr compared to 6.92 ¢/kWhr for amines (DoE/NETL-401/110907).

Table 6. B&W Sensitivity Analysis on Space Velocity on cost of CO_2 capture based on retrofitting Conesville #5 subcritical PC plant

Table 17 Economic Sensitivity Analysis: Effect of Gas Hourly Space Velocity (GHSV)

LEVELIZED COST OF ELECTRICITY			
CASE:	Sensitivity Analysis -GHSV		
SSV0: 263 adsorber & 100 desorber, SSV1: 1000 adsorber & 380 desorber			
		SSV0 (Case 2)	SSV1
	Levelization Factors	TDA	TDA
Existing Steam Generator Output (MW)		433.78	433.78
Power Lost Due to Steam Extraction (MW)		72.98	72.98
LDT Generator Power Output (MW)		0.00	0.00
Aux Power TDA System (MW)		51.62	51.62
Net Generator Output (MW)		309.2	309.2
Capacity Factor		85.0%	85.0%
Property Taxes ($1000's)		$ -	$ -
Total Investment Cost ($1000s)		$ 441,697	$ 355,934
Total Investment Cost ($/net kW)		$ 1,429	$ 1,151
Annual Debt Service to Fund Initial Capital ($1000's)		**$ 77,297**	**$ 62,288**
Fixed Operating & Maintenance Costs ($1000s)		**$ 1,269**	**$ 1,269**
Cost of Purchased Make-Up Power if Applicable ($1000s)		$ 59,378	$ 59,378
Cost of Auxilliary Steam Generated ($1000s)		$ -	$ -
Other Variable & Maintenance Costs ($1000s)		$ 10,977	$ 9,691
Total Variable Operating & Maintenance Costs ($1000s)		**$ 70,355**	**$ 69,069**
Consumable Operating Costs ($1000s)		**$ 4,438**	**$ 1,221**
Transportation Storage and Monitoring ($1000s)		$ -	$ -
LEVELIZED COST OF ELECTRICITY			
Levelization Basis (MW)		309	309
Lifecycle (years)		20	20
Property Taxes on Purchased Property		**0.000**	**0.000**
Fixed O&M (¢/Kw-hr)	1.157	0.06	0.06
Variable O&M (less Make-Up Power and Aux Steam) (¢/Kw-hr)	1.157	0.55	0.49
Auxilliary Steam if generated (¢/Kw-hr)	1.157	0.00	0.00
Make-Up Power if Purchased (¢/Kw-hr)	1.000	2.58	2.58
Consumables (¢/Kw-hr)	1.157	0.22	0.06
Transportation Storage and Monitoring (¢/Kw-hr)	1.157	0.00	0.00
Total Additional Production Cost, (¢/kW-hr)		**3.42**	**3.19**
Capital Cost (¢/Kw-hr)	0.175	**3.36**	**2.71**
CO2 Credits (¢/kWhr)	1.000	**0.00**	**0.00**
Incremental LCOE, (¢/kWhr)		**6.78**	**5.90**
CO_2 COSTS			
CO_2 Captured (lb/hr)		779361	779361
CO_2 Emitted (lb/hr)		86596	86596
CO_2 Removed w/o TS&M ($/ton)		**53.76**	**46.79**
CO_2 Removed w/o TS&M ($/tonne)		**59.26**	**51.57**
CO_2 Avoided w/o TS&M ($/ton)		**78.96**	**68.72**
CO_2 Avoided w/o TS&M ($/tonne)		**87.03**	**75.75**

4.5.2 Preliminary analysis with 550 MW Greenfield plant

An analysis was carried out on the integration of TDA's process with a supercritical plant. TDA performed a preliminary system analysis based on integration of TDA's improved adsorbent with a nominal 550 MW_e supercritical greenfield power plant (Case 12 of NETL report "Cost and Performance Baseline for Fossil Energy Plants - Volume 1: Bituminous Coal and Natural Gas to Electricity (Black 2010). This is a preliminary analysis because it was not based on a full system study. This analysis has not been reviewed by DoE.

We determined the power requirements, capital and operating costs, and finally the CO_2 capture costs for our system. We used the performance of the recently developed advanced sorbent and the capital cost from B&W's recent analysis.

Installation with a greenfield plant allows for additional process design optimization compared intregration with an existing CO_2 plant. There are two important design differences (from our earlier analysis on a retrofit case with an existing plant), include using steam instead of a recuperative heat exchange to heat the flue gas to our operating temperature and expanding the saturated steam to 17.5 psia before it goes into TDA's regeneration process, extracting it at exactly the temperature and pressure required for regeneration.

A summary of the energy requirements are given in Table 7. The major power consumers are: 1) Loss of power by steam extraction, 2) Compression of the CO_2 to 2200 psig, and 3) Compression of the flue gas to off-set the pressure drop in the absorber.

Table 7. Power requirements for TDA's CO_2 capture system with greenfield supercritical CO_2 plant.

Power Output Case 11	**kW_e** 549,990	Efficiency 39.3%	% Lost -
Power Output Case 12	549,970	28.4%	10.9
TDA with Case 12 Power Plant	590,457	30.4%	8.9
TDA Heat Rate Btu/kWh	11,219	Modified	Case 12
Wash Water Pumps kW			326
Direct Contact Cooler Water Pump kW			557
Filter Circ. Pump kW			132
LP Condensate Booster Pump kW			674
Flue Gas Blower kW			13,909
Reducing Gas generator			1
Flue Recycle Blower			1,109
CO_2 and Steam Purge Blower			264
CO_2 Boost Compressor (14.5 to 24 psia)			6,723
CO_2 Dryer Package kW			453
CO_2 Compression and Drying (to 2215 psia)			44,890
CO_2 Removal System Parasitic Power Total kW			69,038

The net plant power output of the greenfield plant with amine based CO_2 capture is 550 MW_e, but when TDA's system is used (Modified Case 12, Table 8), the output is *increased* to 590.5 MW_e (Case 12 of DOE/2010/1397, Black 2010). The primary cause of this increase is the fact that we regenerate our sorbent with low pressure steam, while the amine system needs to use more valuable higher pressure steam. TDA's process utilizes lower pressure (17.5 psia) steam than current amine technology that requires 73.5psia steam. With the ability to use a lower pressure steam, more power can be generated by the steam before it is consumed by regeneration. Thus, our sorbent has the potential to greatly reduce the cost of CO_2 capture; the net plant power out is reduced by 8.9% with TDA's CO_2 capture system compared to a 10.9% loss when amine systems are used (DOE Case 12).

We also estimated the cost of CO_2 capture (Table 8). We scaled capital costs off the previous study. They assumed rotating wheel beds for the adsorber/desorber, and although we now recommend multiple staged fixed beds, we used the capital costs for the rotating wheel system because it had been developed detail and provides the most accurate cost estimates that are

currently available. When B&W performed their previous analysis, there appeared to be no significant capital cost differences between the rotating wheels and the fixed beds. With these assumptions, we estimated that the cost of CO_2 capture and cost of CO_2 avoided as \$38.5/tonne (\$34.9/ton) and \$55.6/tonne (\$50.4/ton), respectively, much lower than the \$45/tonne and \$69/tonne costs associated with amine systems (Table 8).

Table 8. Cost of TDA process compared to Case 11 &12 in DOE/2010/1397, Black 2010

	Pulverized Coal Boiler		
		PC Supercritical	
PERFORMANCE	TDA	Case 11	Case 12
CO2 Capture	90%	0%	90%
Gross Power Output (kWe)	706,835	580,400	662,800
Auxiliary Power Requirement (kWe)	116,378	30,410	112,830
Net Power Output (kWe)	590,457	549,990	549,970
Coal Flowrate (lb/hr)	565,820	409,528	565,820
Natural Gas Flowrate (lb/hr)	N/A	N/A	N/A
HHV Thermal Input (kWth)	1,934,519	1,400,162	1,934,519
Net Plant HHV Efficiency (%)	30.4%	39.3%	28.4%
Net Plant HHV Heat Rate (Btu/kWh)	11,219	8,687	12,002
Raw Water Withdrawal (gpm/MW_{net})	18.3	9.7	18.3
Process Water Discharge (gpm/MW_{net})	4.3	2.0	4.3
Raw Water Consumption (gpm/MW_{net})	14.1	7.7	14.1
CO_2 Emissions (lb/MMBtu)	20	204	20
CO_2 Emissions (lb/MWh_{gross})		1,675	203
CO_2 Emissions (lb/MWh_{net})		1,768	244
SO_2 Emissions (lb/MMBtu)		0.0858	0.0016
SO_2 Emissions (lb/MWh_{gross})	Same as 12	0.7063	0.0162
NOx Emissions (lb/MMBtu)		0.070	0.070
NOx Emissions (lb/MWh_{gross})		0.576	0.697
PM Emissions (lb/MMBtu)		0.0130	0.0130
PM Emissions (lb/MWh_{gross})		0.107	0.129
Hg Emissions (lb/TBtu)		1.143	1.143
Hg Emissions (lb/MWh_{gross})		9.41E-06	1.14E-05
COST			
Total Plant Cost (2007\$/kW)	2,849	1,647	2,913
Total Overnight Cost (2007\$/kW)	3,279	2,024	3,570
Bare Erected Cost		1,345	2,239
Home Office Expenses	Same as 12	127	211
Project Contingency		176	362
Process Contingency		0	100
Owner's Costs		377	657
Total Overnight Cost (2007\$ x 1,000)	1,935,829	1,113,445	1,963,644
Total As Spent Capital (2007\$/kW)	3,279	2,296	4,070
COE (mills/kWh, 2007\$)[1,2]	94.7	58.9	106.5
CO2 TS&M Costs		*0.0*	*5.6*
Fuel Costs	5.2	*14.2*	*19.6*
Variable Costs	18.3	*5.0*	*8.7*
Fixed Costs	12.1	*8.0*	*13.0*
Capital Costs	51	*31.7*	*59.6*
LCOE (mills/kWh, 2007\$)[1,2]	108.9	74.7	135.2

Although TDA's modified Case 12 generates more power than Case 12, we took no credit for the CO_2 avoided in other power plants. We assumed that the commercial unit would be reduced in coal consumption to the desired 550 MW_e and that the CO_2 emissions would be slightly lower. We conservatively assumed that the CO_2 emissions for Case 12 and TDA's plant would be the same.

TDA sorbent technology was selected for detailed economic analysis by DOE/NETL (Stevens 2013). The DoE pathways study quantified the performance and cost benefits of several different post combustion CO_2 capture methods. Cost analysis is based on an ASPEN system model developed by DoE Office of Program Planning and Analysis. This analysis assumes engineering projections of the technology's potential. Thus, it was based not on the current state of development of the technology but where it could get to after full development. This study determined that when mature, TDA's proposed process could capture CO_2 at a supercritical steam plant at \$36/ton CO_2 capture and \$46.2/tonne CO_2 avoided; a 25% reduction in cost over Fluor Econamine (Stevens 2012). Furthermore, when TDA's process was combined with an advanced ultra-supercritical steam plant and advanced compression, the cost of CO_2 avoided is only \$26.6/tonne captured and \$30.6/tonne avoided (Stevens 2012), which meets DOE's goal of <35% increase in COE.

4.6 Summary of system and process economics

To demonstrate the economic merit of this sorbent-based post combustion technology, a technical economic analysis (TEA) study was completed. A system and economic analysis of this process was done by B&W on 433.7 MW_e subcritical PC plant (Ramezan 2007). TDA's process has a cost of CO_2 capture of \$45/ tonne for TDA system on retrofit of subcritical plant compared to \$59/ tonne for amines (Ramzean 2007). It increases the the LCOE to 4.77 ¢/kWhr compared to 6.92 ¢/kWhr for amines (Ramzean 2007). TDA conducted a preliminary economic

analysis of TDA's process integrated with supercritical greenfield power plant. TDA's CO_2 capture system will produce 590.5 MW_e compared to 550 MW_e for a plant with the same coal feed input using amine CO_2 capture (Black 2010). The cost of CO_2 capture with TDA's process is calculated to be $38.5/tonne compared to $45/tonne with amines. DOE/NETL has performed its own analysis on TDA's process which found that at mature development it could capture CO_2 at a supercritical steam plant at $36/ton CO_2 capture and $46.2/tonne CO_2 avoided; a 25% reduction in cost over Fluor Econamine (Stevens 2012). In summary, it is a combination of low cost materials (including a low cost adsorbent), low regeneration energy requirements, and a well-optimized and integrated process which allows us to minimize the capital and operating costs and maximize the system efficiency.

4.7 Conclusion and Recommendations

TDA Research, Inc. has developed a novel sorbent based CO_2 removal technology. TDA's process is based on solid alkalized alumina sorbent that removes CO_2 via a chemisorption reaction that has a low heat of desorption. The heat of desorption for our sorbent is 3-10 kcal/mole (depending on the conditions), which is much lower than that for either chemical absorbents such as sodium carbonate (29.9 kcal/mole) or amine-based solvents such as monoethanolamine (14.2 kcal/mole CO_2). Our low cost sorbent can be regenerated with low-pressure (ca. 1 atm) superheated steam without temperature swing or pressure-swing. Under this multi-year funded project TDA established the effectiveness of this chemistry and designed a process around its features to maximize the performance of the system. This project directly addresses the DOE Program Goal to develop a capture technology that minimizes increases in energy cost.

Extensive laboratory, bench-scale and field testing has demonstrated the technical merit of this technology. During the first budget period we improved the loading of the sorbent loading from 0.4 wt% (the loading of sorbent developed at TDA before this grant) to 1.0 wt% under simulated flue gas conditions (13% CO_2). We investigated the effect of flue gas contaminants and performed an extended cycling test (1500 hrs). In the third budget period TDA constructed a bench-scale apparatus for demonstration of continuous CO_2 capture at TDA under simulated flue gas conditions and in the field testing. The process was demonstrated in bench-scale field testing on real coal-derived flue gas with over 100 hours of continuous operation at Western Research Institute's (WRI) combustion test facility (Laramie, WY). These tests showed that TDA's sorbent was able to achieve greater than 90% CO_2 capture with a stable CO_2 loading. In a final fourth budget period further advanced both the sorbent and process design for even better performance. Thus, TDA's solid sorbent based CO_2 capture process is already at TRL 5 having been successfully tested at the bench-scale testing using real coal derived flue gas.

Techno-Economic analysis has shown TDA's CO_2 capture system is very attractive. A detailed system and economic model performed by B&W was carried out; the analysis was based on retrofiting with AEP Conesville #5 433.7 MW_e subcritical plant with the CO_2 capture. TDA's process hass a cost of $45/tonne CO_2 captured and when integrated as a retrofit with 433.7 MW_e subcritical plant. A preliminary analysis was later performed for integrated of TDA's process with a supercritical greenfield power plant. There is considerable saving for the greenfield case and more efficient steam boiler. Here the cost of CO_2 capture with TDA's process is calculated in this preliminary analysis to be $38.5/tonne compared to $45/tonne with amines. DOE/NETL has performed its own analysis on TDA's process which found that at mature development it could capture CO_2 at a supercritical steam plant at $36/tonne CO_2 removed and $30.6/tonne avoided (Stevens 2012). Further, when TDA's process was

combined with advanced ultra-supercritical steam plant and advanced compression the cost of CO_2 avoided is only $26.6/tonne captured and $30.6/tonne avoided (Stevens 2012).

In summary, it is a combination of low cost materials (including a low cost adsorbent), low regeneration energy requirements, and a well-optimized and integrated process which allows us to minimize the capital and operating costs and maximize the system efficiency. There are many advantages of TDA alkalized alumina adsorbent process including low pressure steam, isothermal operation, high concentration of CO_2, and favorable economics. TDA's solid sorbent based CO_2 capture process is currently at TRL 5, with bench-scale testing under a real coal derived flue gas already completed.

4.8 Recommendations for Future Work

The results of the DE-NT000549 project suggest that the sorbent based CO_2 capture with alkalized alumina and isotherm operation for post combustion carbon capture merits further research and development. It is recommended that the performance of a fully-equipped system should be demonstrated at larger-scale (e.g., 0.5 MW) using coal flue gas. The system should contain all critical components (larger scale adsorber and regeneration contactors) to fully demonstrate the cycle sequence and flow configuration. The demonstration duration should be long enough (several months) to extended cycling under coal flue gas conditions under optimum operating conditions. The selected demonstration scale should be large enough require sorbent production in large quantities. A more detailed system simulation and cost analysis is also recommended, including design work and accurate quotes from the suppliers of the major process equipment (e.g., air separation unit, gasifier, CO_2 compressors). Successful completion of this recommended work will provide the basis for the new technology to be employed in potential commercial pilot-scale demonstrations (50-100 MW scale).

References

Annual Energy Outlook 2012 (2012) DOE/EIA-0383(2012) June 2012;

Beér (2007) JM. High efficiency electric power generation: The environmental role, *Progr Energy and Comb Sci*

Black J (2010) Cost and Performance Baseline for Fossil Energy Plants Volume 1: Bituminous Coal and Natural Gas to Electricity. DOE/NETL-2010/1397. Revision 2, November 2010.

Ciferno, Jared (2008) *Pulverized Coal Oxycombustion Power Plants*, DOE/NETL-2007/1291, Volume 1: Bituminous Coal to Electricity , Final Report Revision 2, August 2008.

Ghosh, A., Subrahmanyam, K.S., Krishna, K.S., Datta, S., Govindaraj, A., Pati, S.K. and Rao, C.N.R. (2008). Uptake of H2 and CO2 by Graphene. J. Phys. Chem. C 112: 15704–15707..

Herzog, W; Tester J, Drake E., and Golomb D. (1993)"The Capture, utilization and disposal of carbon dioxide from fossil fuel-fired power plants" Final Report DOE Contract No. DE-FG02-92ER30194, July 1993.

McDonald, D. and A. Zadiraka (2007). "Control of Pulverized Coal Oxy-Combustion Systems" presented to 17th Annual Joint ISA POWID/EPRI Controls & Instrumentation Conference, Pittsburgh, PA, June 10-15.

NETL (2005). Carbon Capture and Sequestration Systems Analysis Guideline, prepared by U.S. Department of Energy Office of Fossil Energy, National Energy Technology laboratory, April.

Sjostrom, S. H. Krutka (2010) "Evaluation of solid sorbents as a retrofit technology for CO2 capture" Fuel 89 (2010) 1298–1306.

Stevens, R. et al. (2012) Current and Future Technologies for Power Generation with Post-Combustion Carbon Capture. DOE/NETL-2012/1557, 2012, DOE Contract Number DE-FE000401. .

Ramezan, M. T.J. Skone, N.Y. Nsakala, and G.N. Liljedahl (2007). *Carbon Dioxide Capture from Existing Coal-Fired Power Plants, Revised November 2007,* National Energy Technology Laboratory Report No. DOE/NETL-401/110907, Novermber 2007.