U.S. Department of Energy
National Energy Technology Laboratory

Early Entrance Co-Production Plant – Decentralized Gasification Cogeneration Transportation Fuels and Steam From Available Feedstocks

DOE Cooperative Agreement DE-FC26-00NT40693

April to June 2001
Quarterly Technical Progress Report

Section 1
Introduction and Summary

This report is Waste Processors Management Inc. (WMPI)'s first quarterly technical progress report. It covers the period of performance from April 15, 2001 through June 30, 2001.

1.1 Introduction

WMPI, along with its subcontractors Texaco, Sasol, and Nexant entered into a Cooperative Agreement DE-FC26-00NT40693 with the U.S. Department of Energy (DOE), National Energy Technology Laboratory (NETL), to assess the techno-economic viability of building an Early Entrance Co-Production Plant (EECP) in the U. S. that produces ultra clean Fischer-Tropsch transportation fuels with either power or steam as the major co-product. The EECP will emphasize on reclaiming and gasifying low-cost coal waste and/or its mixture as the primary feedstocks. The project consists of three phases.

Phase I – Concept definition and RD&T planning

Phase I objectives include conceptual development, technical assessment, feasibility design and economic evaluation of a Greenfield commercial co-production plant and a site specific demonstration EECP to be located adjacent to the existing WMPI Gilberton Power Station. There is very little foreseen design differences between the Greenfield commercial coproduction plant versus the EECP plant other than:

- The greenfield commercial plant will be a stand alone FT/power co-production plant, potentially larger in capacity to take full advantage of economy of scale, and to be located in either western Pennsylvania, West Virginia or Ohio, using bituminous coal waste (gob) and Pennsylvania #8 coal or other comparable coal as the feedstock, while
- The EECP plant, on the other hand, will be a nominal 5,000 bpd plant, fully integrated into the Gilberton Power Company's Cogeneration Plant to take advantage of the existing infrastructure to reduce cost and minimize project risk. The Gilberton EECP plant will be designed to use eastern Pennsylvania anthracite coal waste and/or its mixture as feedstock.

Phase I goals and deliverables include the development of:

- A project management plan.
- A process feasibility design package with sufficient details to determine an order-of-magnitude cost estimates for preliminary economic and market analyses.
- A preliminary environmental and site analysis.
- A RD&T plan for Phase II tasks to be discussed below.
- A preliminary project-financing plan.

Phase II – R&D and Testing

The objective under this phase of the program is to perform research, development and process performance verification testing of any design deficiency identified in Phase I. Due to the relative maturity of the two key technologies (i.e., Texaco's coal gasification and SASOL's FT) proposed for the EECP designs, Phase II activities will be focused mainly on feedstock characterization and gasification process performance testing rather than research and development. Specific Phase II goals include:

- Characterization of anthracite culm and its mixture feedstocks for the Texaco gasifier.
- Gasification performance (pilot plant) testing of design anthracite culm feedstocks at an existing Texaco facility to verify its performance.

Phase III – Preliminary engineering design

The overall objective in Phase III is to upgrade the Phase I site-specific Gilberton EECP capital cost from a preliminary estimate with an accuracy of +/- 35% into a project definition cost estimate with an accuracy of +/- 20%. This improvement in cost estimation accuracy is achieved by updating the Phase I inside battery limits (ISBL) processing plant design packages to incorporate Phase II findings, by refining the outside battery limits (OSBL) utility and offsite support facility design packages to include final and updated ISBL unit demands, by obtaining actual budgetary quotes for all major equipment, and by further engineering to define the actual bulk commodities requirements.

The upgraded Phase III capital cost estimate, together with the updated operating and maintenance cost estimate, will serve as the backbone to finalize the EECP Project Financing Plan to proceed with detailed engineering, procurement and construction of the EECP.

The Phase III goals and deliverables include the development of:

- Preliminary Engineering Design package of the EECP.
- A Project Financing Plan.
- An EECP Test Plan.

The overall project scope of work consists of sixteen separate tasks broken down into the three phases as shown in Table 1.1. The table also shows the project team organization responsible for taking the leading role for each task, of which the specific work descriptions were discussed in more detail in the Project Management Plan.

Table 1.1 – Scope of Work Task Summary

Task #	Description	Leading Role
Phase I	Concept Definition and RD&T Planning	
Task 1	Project Plan	Nexant
Task 2	Concept Definition, Design Basis & EECP Process Configuration Development	Nexant
Task 3	System Technical Assessment (Trade-off Analysis)	Nexant
Task 4	Feasibility Study Design Package Development	Nexant (w/individual Process Design package from Texaco and Sasol)
Task 5	Market Assessment	Texaco
Task 6	Preliminary Site Analysis	WMPI and Consultants
Task 7	Preliminary Environmental Assessment	WMPI and Consultants
Task 8	Economic Assessment	WMPI and Consultants
Task 9	Research Development and Test Plan	Texaco
Task 10	Preliminary Project Financing Plan	WMPI and Consultants
Task 11	Phase I - Concept Report	Nexant
Phase II	R&D and Testing	
Task 1	Feedstock Mix Characterization and Gasification Performance Verification	Texaco (w/ support from Nexant and WMPI)
Task 2	Update RD&T Plan	Texaco
Phase III	EECP Engineering Design	
Task 1	Preliminary Engineering Design Package Development	Nexant – with a) Texaco – Gasification Design Package b) Sasol – FT Design Package c) Nexant – BOP and cost estimate
Task 2	Project Financing Plan	WMPI and Consultants
Task 3	EECP Test Plan	Nexant

1.2 Summary

First quarterly activities for the project are in the areas of:

- Phase I Task 1 - Project Plan
- Phase I Task 2 - Concept Definition, Design Basis & EECP Process Configuration Development, and
- Phase I Task 3 – System Technical Assessment.

Results and accomplishments of each are described in more detail in the following sections.

Section 2
Phase I Task 1 – Project Plan

As a key planning activity, a Project Management Plant for the WMPI/EECP project was prepared, issued and approved by DOE. A copy was sent to the AAD Document Control Office of DOE/NETL on May 15, 2001.

This Project Management Plan was developed to provide a road map for the overall project execution, clearly delineating the project:

- Objectives.
- Detailed work breakdown structures and obligated deliverables.
- Technical and management approach.
- Control plan - scheduling, budget and reporting.
- Administration details.

Phase I Task 2 – Concept Definition, Design Basis & EECP Process Configuration Development

Major objectives under the current task were to 1) refine the proposed EECP concept, giving more in-depth considerations to the various process design issues, feedstock availability and quality, environmental and economic criteria, 2) establish a design basis for the Gilberton EECP which can then serve as a template from which the Greenfield design basis can be developed, and 3) establish the basic Gilberton EECP process configuration from which preliminary heat and material, utilities and power balances can be carried out.

3.1 Original proposed WMPI EECP concept

The original proposed EECP concept involves the deployment of commercial and/or near-commercial available technologies of Texaco coal gasification and Sasol Fischer-Tropsch (FT) indirect liquefaction, fully integrated into a combined facility, to convert anthracite coal waste and its mixtures into high-value liquid transportation fuels and power. The plant is to be designed for a feedstock of coal, coal derived wastes such as anthracite culm, petroleum coke, or a combination of any of the above. The emphasis is on the use of anthracite culm coal waste as feed, to the maximum extent possible, depending on the ability of gasifying it and the resulting syngas composition for the subsequent FT conversion. To further increase the versatility of the co-production concept, and to increase the use of coal wastes, so as to take advantage of their low cost and the environmental benefits from properly reclaiming these coal waste materials, it was proposed that natural gas will be used as co-feed for hydrogen makeup. The overall concept is presented in Figure 1-1 showing the block flow diagram of the EECP concept as depicted in the proposal.

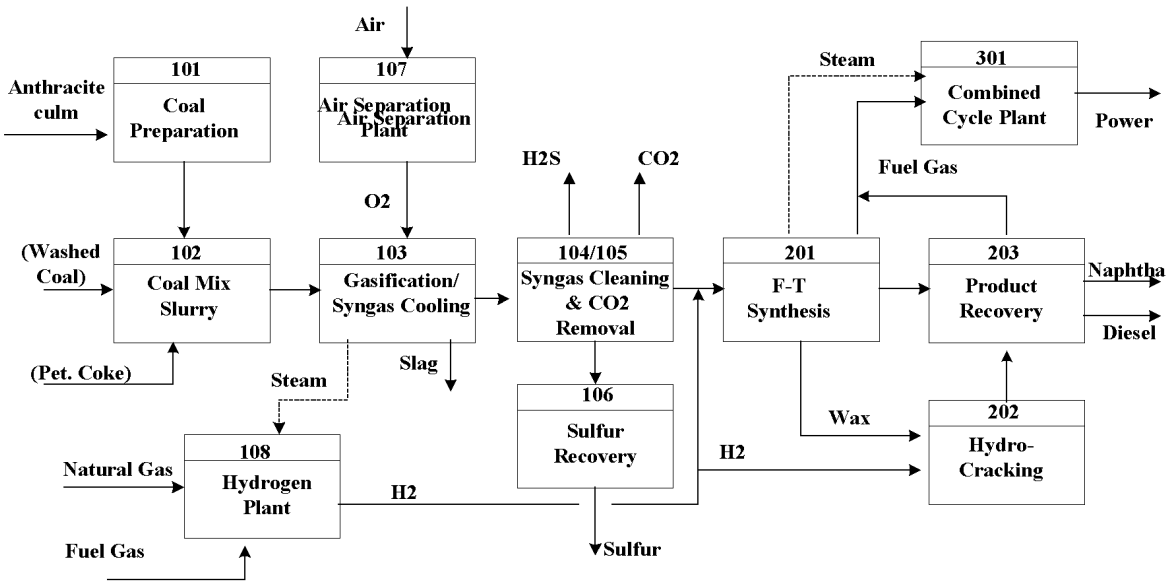

Figure 3-1 Block Flow Diagram –Embodiment of Proposed EECP System

3.2 Preliminary feedstock quality assessment, Texaco gasification performance estimation of anthracite culm, and Sasol FT process assessment based on estimated syngas quality.

Qualitative screening, laboratory measurements of anthracite culm property, and quantitative Texaco gasification and Sasol FT performance estimations were carried out as part of Phase I Task 2 activities in refining the proposed EECP concept, and to finalize the design basis and process configuration. These activities include:

Laboratory characterization of anthracite culm

These materials have high ash content, and the ash being consisted mostly of silica and aluminum oxide has a high fusion temperature. Both factors can adversely affect the Texaco gasification design and performance. Limited laboratory measurements were made at HawkMtn Laboratory Inc. of West Hazieton, Pennsylvania, in attempt to better characterize its properties and identify its variability. Additional testing may be needed as part of the Phase II RD&T activities.

As a result of these analyses, the design basis was set for anthracite culm with a 20% ash (composition shown in the next section) for a reasonable Texaco gasification performance. A beneficiation plant similar to what is currently being used at the Gilberton Cogen Plant will be incorporated as part of the front-end coal slurry preparation design.

Virgin anthracite coal, Pennsylvania #8 bituminous coal, and petroleum coke from representative source as potential mixing components to the anthracite culm feed were also characterized for proximate and ultimate analysis, heating value, ash content and fusion temperature.

Design considerations of Texaco coal gasification process

The Texaco gasifier can be operated either under a syngas radiant cooling or a quench cooling mode. The radiant cooling mode requires more capital but is more energy efficient. In addition, it requires more maintenance in solid feed applications. The syngas cooler is susceptible to potential plugging and erosion problem.

With the high ash content of the anthracite culm feed and its high ash fusion temperature, Texaco has selected to design the gasifier under the quench mode of operation, using a fluxing agent, when necessary to control the slag flow.

Preliminary gasification estimates of operation (EOO) were performed by Texaco based on either anthracite culm or its mixtures with petroleum coke as the feed. Required amount of limestone as the fluxing agent was estimated for each run. The thermal efficiency of coal gasification is penalized by the high ash content in the coal feed which can vary from 20 to over 40% in total ash. To avoid further decrease in efficiency, it was agreed to limit the design anthracite culm feed to a maximum ash content of 20%.

Design considerations of Sasol Fischer-Tropsch process

Sasol's FT synthesis technology has over 50 years of experience. It currently has two commercial plants in operation. The technology to be employed in the EECP design is Sasol's Low-Temperature FT (LTFT) process used to produce high quality transportation fuels. While traditionally this process has been carried by Sasol in a fixed-bed reactor configuration using iron-based catalysts, their slurry phase reactor process which has been under development for the last 10 years and is now fully commercial proven, will be used in the EECP design. The slurry phase reactor configuration offers superior advantage in reaction control, design scale up, cost of construction and operation simplicity.

Sasol offers two commercial type of FT catalysts (iron based vs. cobalt-based) for their slurry phase FT process (known as Sasol Slurry Phase Distillate Process.) Both are potentially applicable for the EECP design, with their distinct advantages vs. drawbacks. Considerations are given to the followings as part of the overall EECP design basis.

Iron-based catalyst process –

- More commercial experience
- More sulfur tolerance
- Lower required syngas H2:CO ratio
- Lower activity (i.e., tail gas recycling required)
- Must deal with spent catalysts

Cobalt-based catalyst process –

- Less commercial experience
- More stringent syngas cleanup requirement
- Close to stoichiometric syngas H2:CO requirement
- Higher activity and liquid conversion

Preliminary performance for both type of FT catalytic processes were estimated, compared and analyzed based on syngas compositions derived from Texaco's EOOs. Results form the basis for the final EECP configuration selection and design basis determination.

The iron-based catalyst process was selected for the EECP design. Deciding factors include 1) proven performance for coal derived syngas, 2) compatibility with

commercially available syngas cleanup technologies, and 3) design consideration to co-produce power.

3.3 Revised WMPI EECP Configuration

With the preliminary feedstock, Texaco gasification and Sasol FT process assessments performed. The EECP block flow configuration is revised as shown in Figure 3-2.

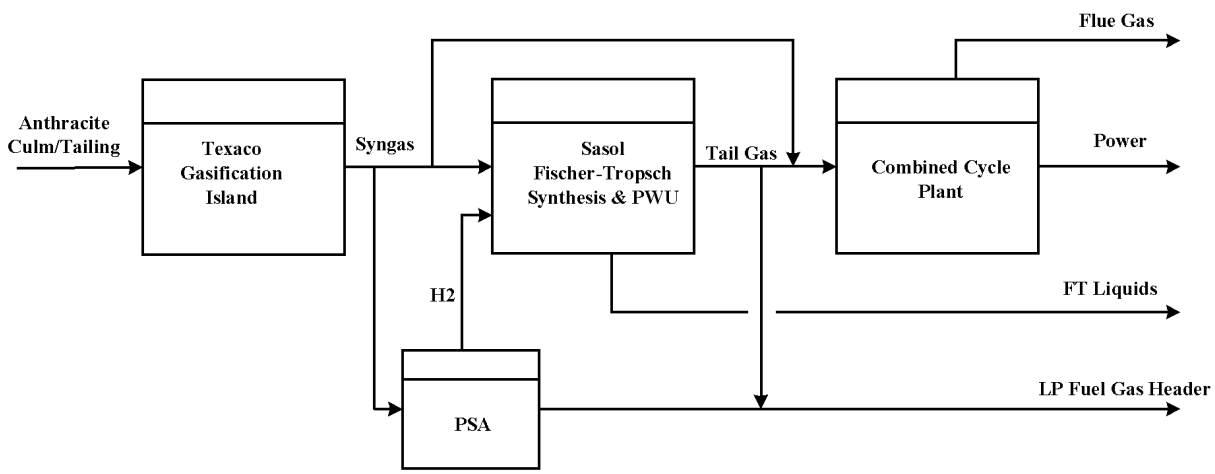

Figure 3-2 Overall EECP Process Configuration

The EECP plant consists of two main process sections: Texaco Gasification, and Sasol FT Synthesis and product work up (PWU). The Texaco gasification section consists of air separation unit; coal storage, receiving and conveying; anthracite culm beneficiation facility; coal slurry preparation; gasification; sour water-gas-shift; syngas cooling; Rectisol acid gas removal; sulfur recovery and tail gas treating; and CO2 product treating and handling.

The Sasol FT synthesis and PWU section consists of syngas polishing; FT synthesis; pressure swing absorption (PSA) for hydrogen recovery and product workup and recovery.

Block flow diagrams depicting the Texaco coal gasification section and the Sasol FT synthesis section are shown in Figure 3-3 and 3-4 respectively. More detailed process descriptions will be provided at a later time.

With this revised EECP scheme, natural gas is no longer to be considered as a co-feed as originally envisioned. Reasons for this design change included issues of gas availability, its recent escalation in price, and the decision to reduce the total anthracite culm design ash content.

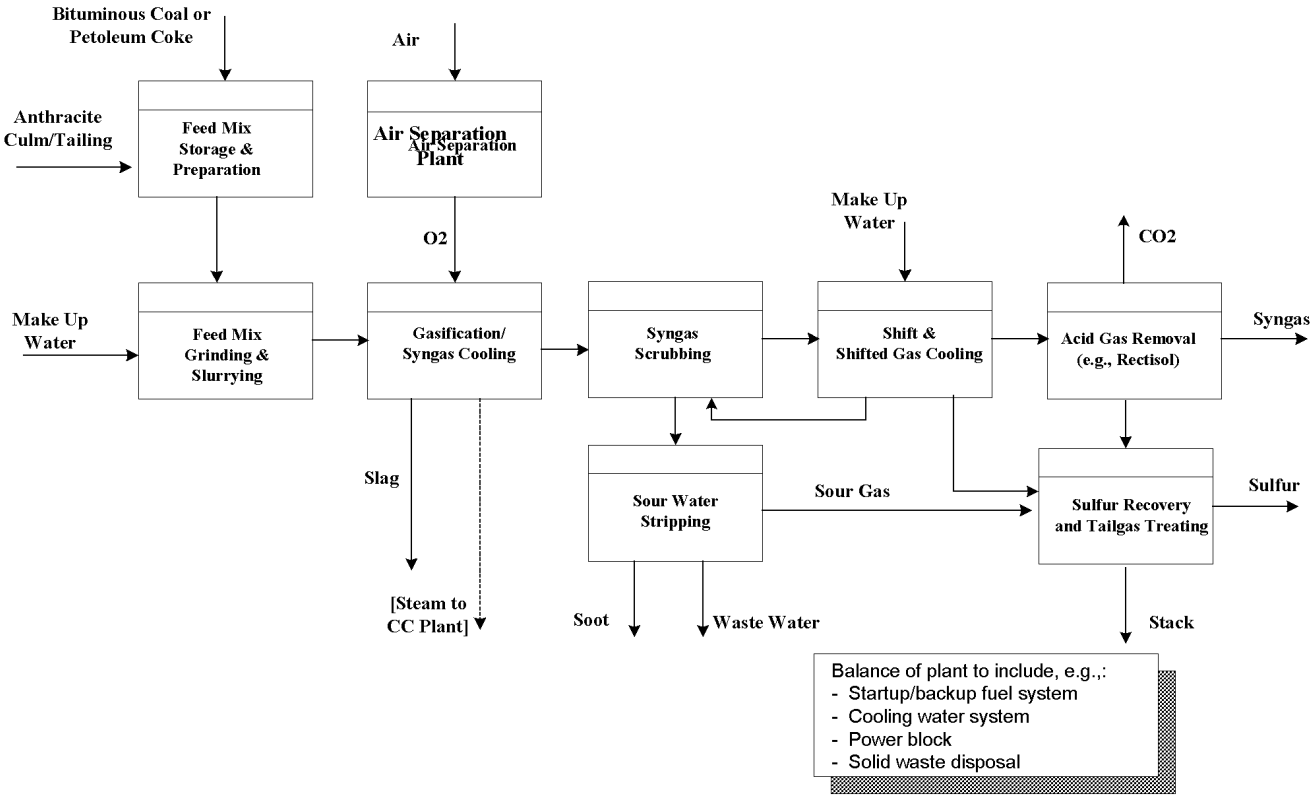

Figure 3-3 Preliminary BPD (Texaco Gasification Section)

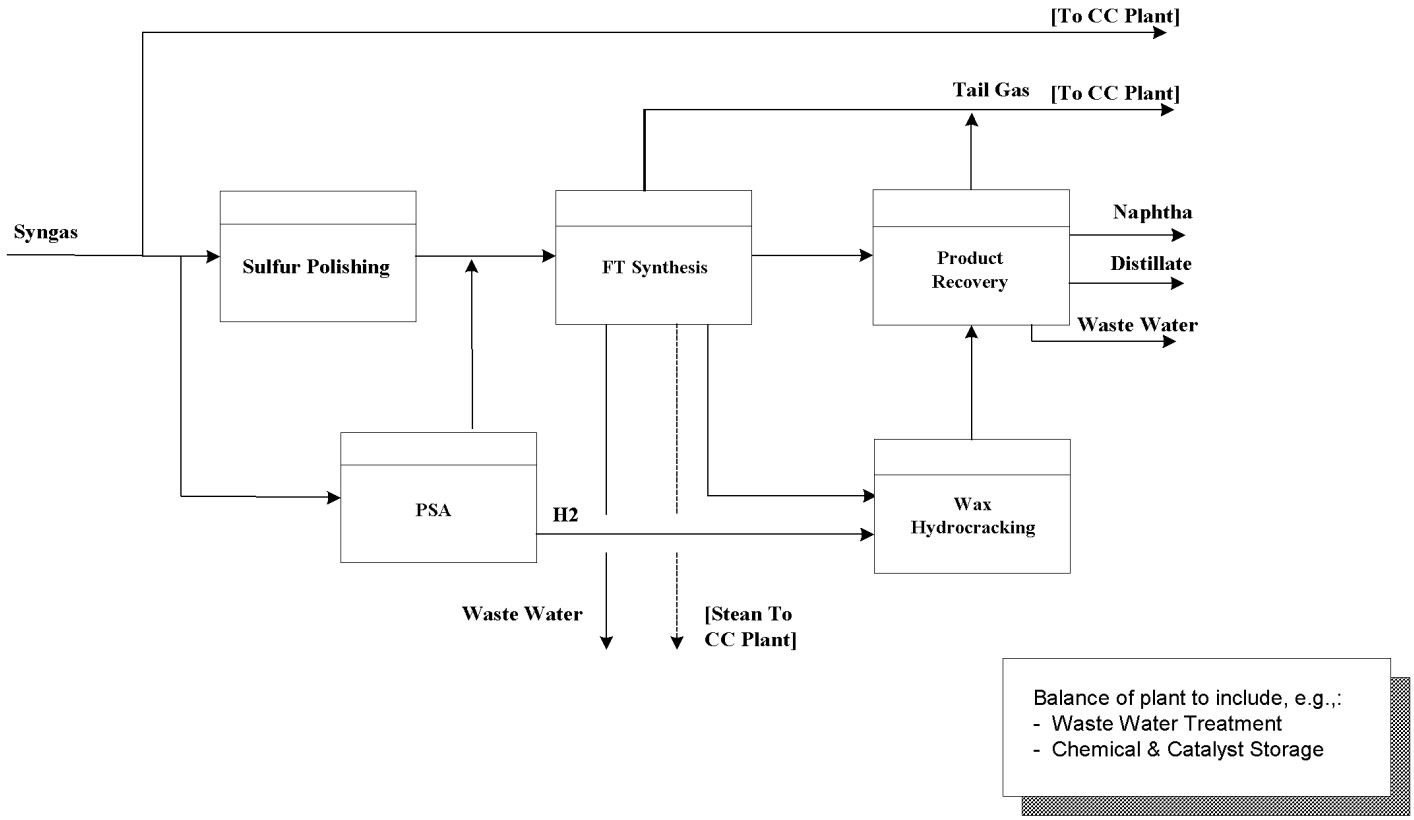

Figure 3-4 Preliminary BPD (Sasol FT Synthesis & PWU Section)

3.4 Gilberton EECP Design Basis

A Basic Engineering Design Data (BEDD) package was developed for the Gilberton EECP design. It was reviewed and revised by all project-teaming partners. The BEDD document contains some design data that are confidential information. A more general descriptive design basis is presented below:

I. Plant Capacity

Produces nominal 5000 barrels per stream day (BPSD) of F-T liquids based on syngas generated from Texaco quench gasifier feeding beneficiated anthracite culm waste (BACW) as feed. Sulfur removal and recovery units are sized for BACW feeds with flexibility to handle higher sulfur content with either bituminous coal or petroleum coke as a blending component. Treated syngas feed to the F-T unit shall meet the required H2:CO and total sulfur limit in support of the Sasol iron-based F-T process.

II. Site Data (allocated 30-acre site adjacent to Gilberton Cogen Plant)

Location:	
City/State	Gilberton, Pa
Latitude	40° 48' N
Longitude	76° 12' W
Altitude, Ft above S/L	1700
Ambient Temperatures, ^{o}F:	
Summer Design Dry Bulb	85
Wet Bulb	75
Summer Maximum Dry Bulb	90
Wet Bulb	80
Winter Design Dry Bulb	- 5
Wet Bulb	- 5
Winter Minimum Dry Bulb	-15
Wet Bulb	-15
Ambient Pressure, psia:	
Design (Normal)	14.2
Snowfall, inches:	
Maximum annual	62
Design 24 hours	10
Rainfall, inches:	
Maximum annual	62
Design in 24 hours	3

Wind Velocity, MPH:	
Winter	TBD
Summer	TBD
Maximum(design)	70 (Per UBC)
Wind Direction, From:	
Prevailing	West
Earthquake Zone:	
Seismic Risk Zone	1
Seismic Zone Factor	0.075

III. Feeds

Anthracite Coal Feedstock

Description	Anthracite Culm Tailings Design Case
Feedstock Sample Number	A3
Proximate Analysis, wt%:	
Moisture	1.92
Volatile Matter	7.21
Fixed Carbon	71.25
Ash	19.62
Ultimate Analysis, wt% dry:	
Carbon	72.54
Hydrogen	2.32
Nitrogen	0.87
Sulfur	0.38
Chloride	---
Oxygen	3.89
Ash	20.00
HHV, Btu/lb(dry basis)	11,119
Hardgrove Index	TBD
Ash Analysis, wt%:	
Silica, SiO_2	57.10
Aluminum Oxide, Al_2O_3	28.20
Iron Oxide, Fe_2O_3	5.69
Calcium Oxide, CaO	0.50

Magnesium Oxide, MgO	0.20
Sodium Oxide, Na_2O	0.62
Potassium Oxide, K_2O	2.97
Titanium Oxide, TiO_2	2.43
Phosphorus Pent-oxide, P_2O_5	---
Sulfur Trioxide, SO_3	2.29
Others	---

Ash Fusion Temp in Reduced Atmosphere (ASTM D-1857), ^oF:

Initial Deformation	2740
Softening	2790
Fluid	> 2800

Bituminous Coal Feedstock (as blending component)

Description	Bituminous Coal	
	Design Case	Alternate Case
Proximate Analysis, wt%:		
Moisture	9.60	21.23
Fixed Carbon	52.27	54.88
Ash	18.08	18.42
Ultimate Analysis, wt% dry:		
Carbon	66.71	68.55
Hydrogen	4.15	4.13
Nitrogen	1.12	1.15
Sulfur	3.29	4.86
Chloride	---	---
Oxygen	4.73	1.82
Ash	20.00	19.49
HHV, Btu/lb(dry basis)	11,843	12,439
Hardgrove Index	TBD	TBD
Ash Analysis, wt%:		
Silica, SiO_2	52.54	35.15

Aluminum Oxide, Al_2O_3	25.47	24.80
Iron Oxide, Fe_2O_3	14.80	29.39
Calcium Oxide, CaO	0.47	3.72
Magnesium Oxide, MgO	0.16	0.30
Sodium Oxide, Na_2O	0.16	0.42
Potassium Oxide, K_2O	2.06	1.72
Titanium Oxide, TiO_2	1.52	1.27
Phosphorus Pent-oxide, P_2O_5	---	0.34
Sulfur Trioxide, SO_3	2.82	1.68
Others	---	1.21

Ash Fusion Temp in Reduced Atmosphere (ASTM D-1857), ^oF:

Initial Deformation	2490	1949
Softening	2535	2090
Fluid	2633	2265

Pet Coke Feedstock (as blending component)

Description	Fluid Coke	Petroleum Coke
Coke Source	Koch	Sample P1
Proximate Analysis, wt%:		
Moisture	11.67	0.36
Volatile Matter	6.20	11.90
Fixed Carbon	81.48	85.95
Ash	0.65	1.79
Ultimate Analysis, wt% dry:		
Carbon	88.56	85.93
Hydrogen	1.80	3.90
Nitrogen	1.71	1.27
Sulfur	6.18	5.37
Chloride	---	---
Oxygen	1.01	1.73
Ash	0.74	1.80
HHV, Btu/lb(dry basis)	14,191	15,251
Hardgrove Index	36	> 70
Ash Analysis, wt%:		
Silica, SiO_2	18.2	59.4
Aluminum Oxide, Al_2O_3	6.2	10.9
Iron Oxide, Fe_2O_3	4.1	12.1
Calcium Oxide, CaO	4.17	4.1
Magnesium Oxide, MgO	2.03	1.78
Sodium Oxide, Na_2O	1.52	1.56
Potassium Oxide, K_2O	0.49	1.21
Titanium Oxide, TiO_2	0.19	1.71
Nickel Oxide, NiO	2.25	---
Vanadium Pent-oxide, V_2O_5	47.17	---
Phosphorus Pent-oxide, P_2O_5	1.6	---
Sulfur Trioxide, SO_3	10.68	2.08
Others	1.4	5.16
Ash Fusion Temp in Reduced Atmosphere (ASTM D-1857), ^oF:		
Initial Deformation	> 2700	2131
Softening	> 2700	2489
Fluid	> 2700	2697

Fluxant

Description	Limestone	Iron Oxide
Proximate Analysis, wt%:		
Moisture	---	10.56
Volatile Matter	36.84	27.64
Fixed Carbon	---	---
Ash	63.16	61.8
Ultimate Analysis, wt% dry:		
Carbon	10.04	8.43
Hydrogen	---	---
Nitrogen	---	---
Sulfur	---	---
Chloride	---	---
Oxygen	26.80	22.47
Ash	63.16	69.1
HHV, Btu/lb(dry basis)	0	0
Ash Analysis, wt%:		
Silica, SiO_2	15.40	3.96
Aluminum Oxide, Al_2O_3	4.95	2.12
Iron Oxide, Fe_2O_3	3.10	15.9
Calcium Oxide, CaO	71.80	46.3
Magnesium Oxide, MgO	1.80	7.68
Sodium Oxide, Na_2O	0.61	0.2
Potassium Oxide, K_2O	0.84	0.04
Titanium Oxide, TiO_2	0.25	0.14
Phosphorus Pentoxide, P_2O_5	---	---
Sulfur Trioxide, SO_3	1.20	0.65
Others	0.05	23.01

Particle Size Distribution:

	Percent Particles Passing	
14 mesh	100	TBD
42 mesh	75.6	TBD
100 mesh	49.2	TBD
325 mesh	32.8	TBD

Oxygen

Description	95 Vol% Oxygen
Source	Air Separation Plant

Nitrogen

Source	Air Separation Plant	
Composition:		
Nitrogen (N_2) + Argon (Ar)	99.99	Vol%

IV. Product Specifications

Information shown in this section is preliminary. Texaco and Sasol will confirm actual specifications based on marketing requirement and actual process yields.

Diesel

	EPA 2006	EECP Diesel	Method
API Gravity	32 Min 49.9 Max	49.9 – 54.7	ASTM D-287
Aromatics, Wt%	27 Max	<0.5	ASTM D-1319
Ash, Wt%	0.01 Max		ASTM D-482
Carbon Residue on 10% Distillation Residue, Wt%	0.3 Max		ASTM D-524
Cetane Number	40 Min	>70	ASTM D-613
Cloud Point Temp, °F	3 Max	TBD	ASTM D-2500
Corrosion, Copper Strip	No. 3 Max		ASTM D-130
Distillation Temp, °F:			ASTM D-86
Initial Boiling Point (IBP)	340-400		
10% Point	400-460		
50% Point	470-540		
90% Point	560-630		
End (98.5%) Point	610-690		
Flash Point Temp, °F	130 Min		ASTM D-93
Kinematic Viscosity @ 40°C, cSt:			ASTM D-445
Min	2.0	>1.5	
Max	3.2		
Sulfur Content, ppmW	15 Max	<10	ASTM D-2622
Water and Sediment, Vol%	0.05 Max		ASTM D-1796

Naphtha

	Typical	EECP Naphtha	Method
Aromatics, Vol%	25 Max	< 1	ASTM D-5580
Benzene, Vol%	0.8 Max		ASTM D-5580
Corrosion, Copper Strip	No. 1 Max		ASTM D-130
Distillation Temp, °F:			ASTM D-86
10% Point	167 Max	160-170	
50% Point	221 Max	210-220	
90% Point	300 Max	250-270	
End (98.5%) Point	___ Max		
Existent Gum, mg/100 mL	3 Max		ASTM D-873
Reid's Vapor Pressure	7 Max	10 Max	ASTM D-323
Sulfur Content, ppmW	30 Max	< 10	ASTM D-2622

Sulfur

Color	Bright Yellow Solid
H2S Content	10 ppmW Max

V. Battery Limits and Offsite Utility Specifications

Battery limit conditions; the number of steam levels and their header conditions; boiler feed water supply, their sources, composition and conditions; plant fuel gas pressure levels; instrumentation purge and plant power level requirements, etc were identified as part of the overall engineering design basis document.

In additional, project instructions on equipment code of accounts were also set up.

Section 4

Phase I Task 3 – System Technical Assessment

Under this task, preliminary heat, material and utility balances are being carried out, based on process performance estimates and utility demands from Texaco and Sasol for the gasification and FT synthesis section respectively. This preliminary technical assessment was performed with the following objectives:

- To quantify the different consumables imported and products exported from the overall EECP complex to allow estimation of operation costs
- To define the preliminary size for the various process, offsite and utility facilities to allow rough estimates of capital cost
- To establish an integrated process/utility model for future optimization trade-off analysis, and to provide preliminary emission data needed for Phase I Task 7 (Preliminary Environmental Assessment) planning.

Results will be discussed in more detail in the next quarterly technical report.

Section 5
Project Management

5.1 Kickoff Meeting

A project kickoff meeting was held with DOE at the NETL Offices on April 23, 2001 where the overall project objective, plans, scope of work of various tasks and each project participants' responsibilities were presented and discussed. A decision was made to accelerate the Phase II RD&T program because it addresses some of the key technical issues that would impact the overall EECP design and economics. As a result, a modified project schedule was issued. It has been incorporated into the Project Management Plan.

Meeting minutes were submitted to DOE/NETL on April 30, 2001.

5.2 Plans

As part of the overall Project Management Plan, the project work plan and schedule was issued and approved by DOE.

5.3 Biweekly Project Status Report

An informal Biweekly Project Status reporting system was implemented since June 2001 as a means of keeping the DOE Project Manager informed of all work in progress.