IEMDC

Inline Electric Motor Driven Compressor

GMRC Conference
Salt Lake City, UT

October 5, 2003

DRESSER-RAND

EMD
A Curtiss-Wright Company

ASIRobicon
Industrial Power Control

© Copyright 2003

IEMDC - What is it?

- Inline Electric Motor Driven Compressor
  - Inline - Pipe flange connections inline
  - Electric Motor - Driven by high speed direct drive induction motor that operates in process gas environment and is powered by Variable Frequency Drive
  - Compressor - Single stage overhung compressor stage directly mounted on motor shaft

DRESSER-RAND

EMD A Curtiss-Wright Company

ASIRobicon Industrial Power Control

IEMDC - Applications

- New pipelines
- Existing pipelines with low pressure ratios
- Pipelines near low cost power
- De-bottlenecking of plant process

DRESSER-RAND

EMD
A Curtiss-Wright Company

ASIRobicon
Industrial Power Control

IEMDC Highlights

- No building required
- Very quiet operation
- No on-site emissions
- Minimal piping
- Small site - Short construction time
- Below grade - lightning avoidance
- Battery of the Future?

DRESSER-RAND

EMD
A Curtiss-Wright Company

ASIRobicon
Industrial Power Control

The Subterranean IEMDC

- Out of sight, out of mind
- Improved Security
- “Good Neighbor Concept” - Low noise, Out of sight

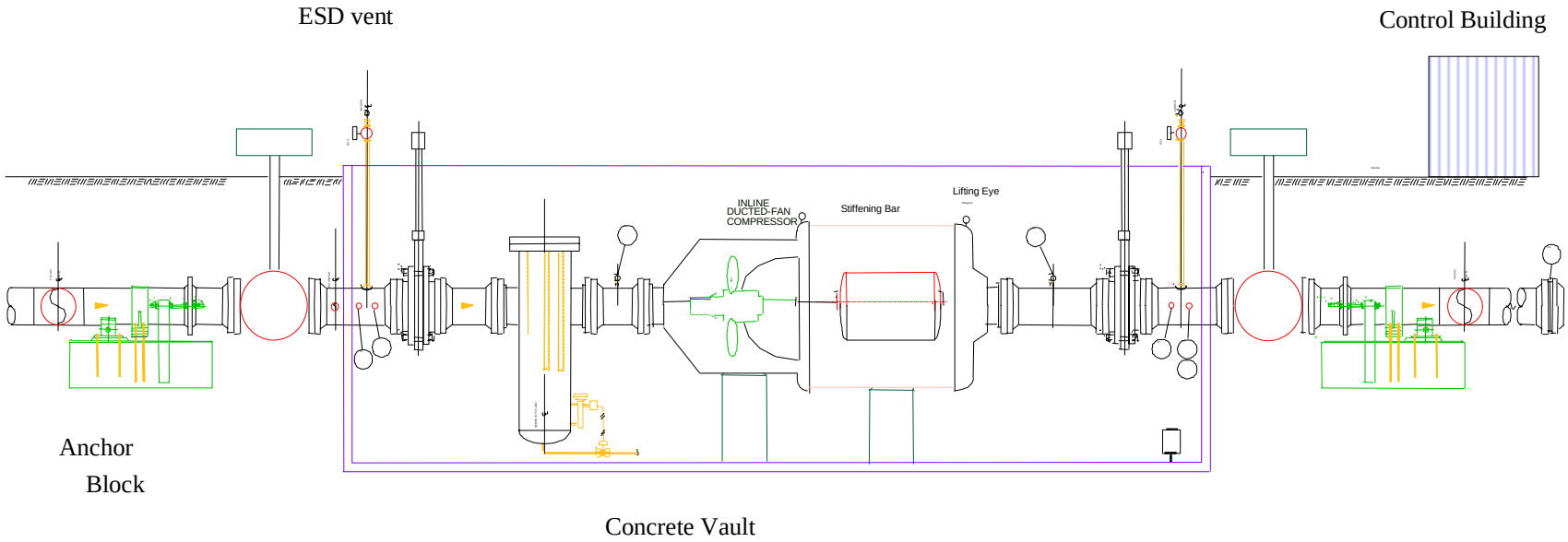

Compliments of El Paso Natural Gas Co.

DRESSER-RAND

EMD
A Curtiss-Wright Company

ASIRobicon
Industrial Power Control

IEMDC - Economics

- Reduction in piping $150K
- Building Reductions $100K
- Piping Pressure Loss $ 50K
- Emissions Fees $ 20K
- Higher Global Energy Efficiency
  - Open cycle gas turbine efficiency = 35%
  - Combined cycle power generation = 52%
    - Includes gas and electrical transmission costs

DRESSER-RAND

EMD A Curtiss-Wright Company

ASIRobicon Industrial Power Control

IEMDC Status Update

- **Initial system cost estimates confirm commercial viability of the IEMDC**
- **Design work confirms technical targets are achievable**
- Study commissioned to better define market requirements and growth potential of the application.

DRESSER-RAND

EMD
A Curtiss-Wright Company

ASIRobicon
Industrial Power Control

Costs - Installation Ranges

- Gas Turbines / Centrifugals
  - $1300/bhp Industrial, 20 MW
  - $1000/bhp Aeroderivative, 10 MW
- Reciprocating Engine / Compressor
  - $1400/bhp Low Speed, 8 MW
  - $750/bhp Medium Speed, 4 MW
- IEMDC
  - $550/bhp 4 - 10 MW

DRESSER-RAND

EMD A Curtiss-Wright Company

ASIRobicon Industrial Power Control

Costs - Maintenance Ranges

- Gas Turbine / Centrifugal
  - $19 Industrial Turbine, 20 MW
  - $25 Aeroderivative, 10 MW
- Reciprocating Engine / Compressor
  - $21 Low Speed, 8 MW
  - $33 Medium Speed, 4 MW
- IEMDC and Conventional Motor
  - $ 7 High Speed 4-10 MW

DRESSER-RAND

EMD A Curtiss-Wright Company

ASIRobicon Industrial Power Control

Speed Control with a VFD

Reducing Speed to lower flow results in higher efficiency and lower hp.

HP: 11,000 ⇒ 5,000

Q: from 650 ⇒ 400 MM

- Fine Control
- 40% Savings over Throttling under similar conditions

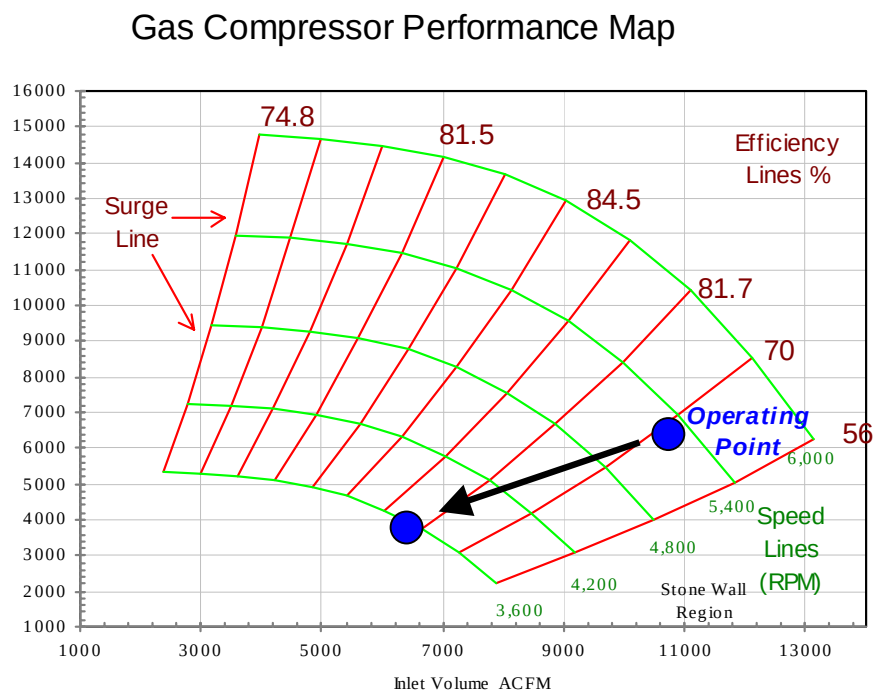

DRESSER-RAND

EMD A Curtiss-Wright Company

ASIRobicon Industrial Power Control

IEMDC - Making it happen...

- Advanced VFD Controller
- New Motor Designs
  - Scaled Family of Frames
  - Rugged Induction Motor
- Magnetic Bearings
  - Standardization of Design

DRESSER-RAND

EMD
A Curtiss-Wright Company

ASIRobicon
Industrial Power Control

Magnetic Bearings

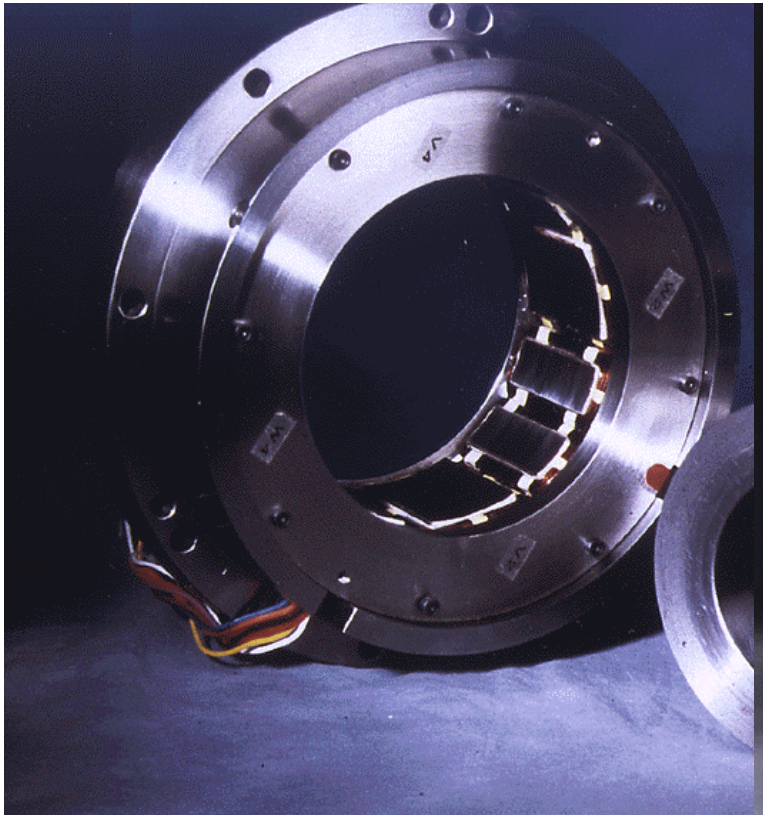

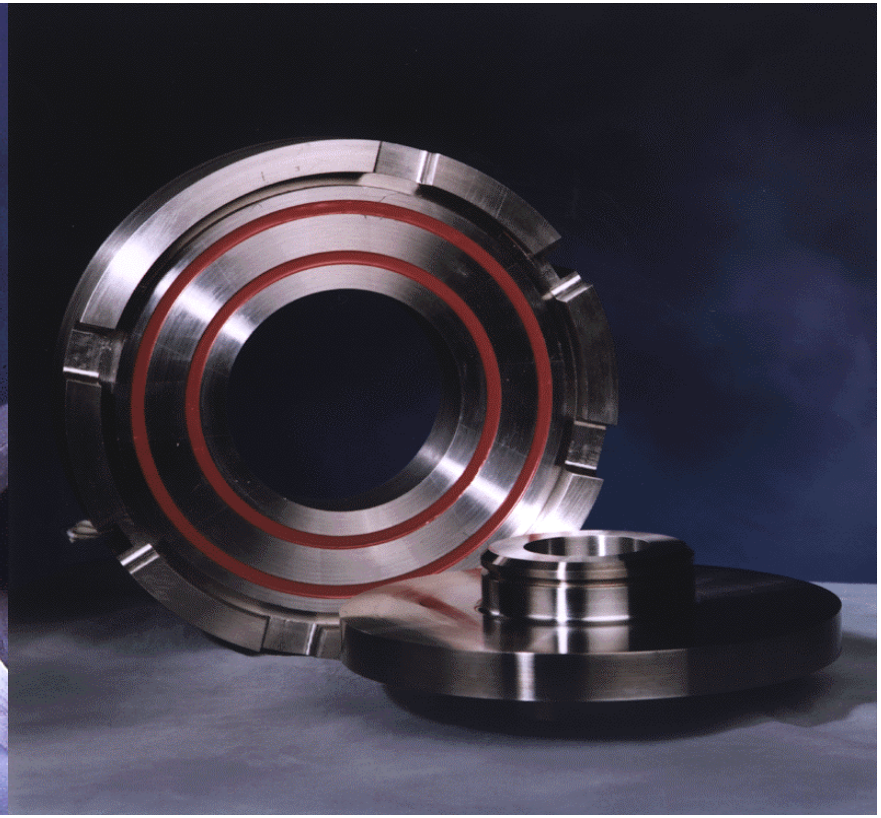

DRESSER-RAND

EMD
A Curtiss-Wright Company

ASIRobicon
Industrial Power Control

IEMDC Concept

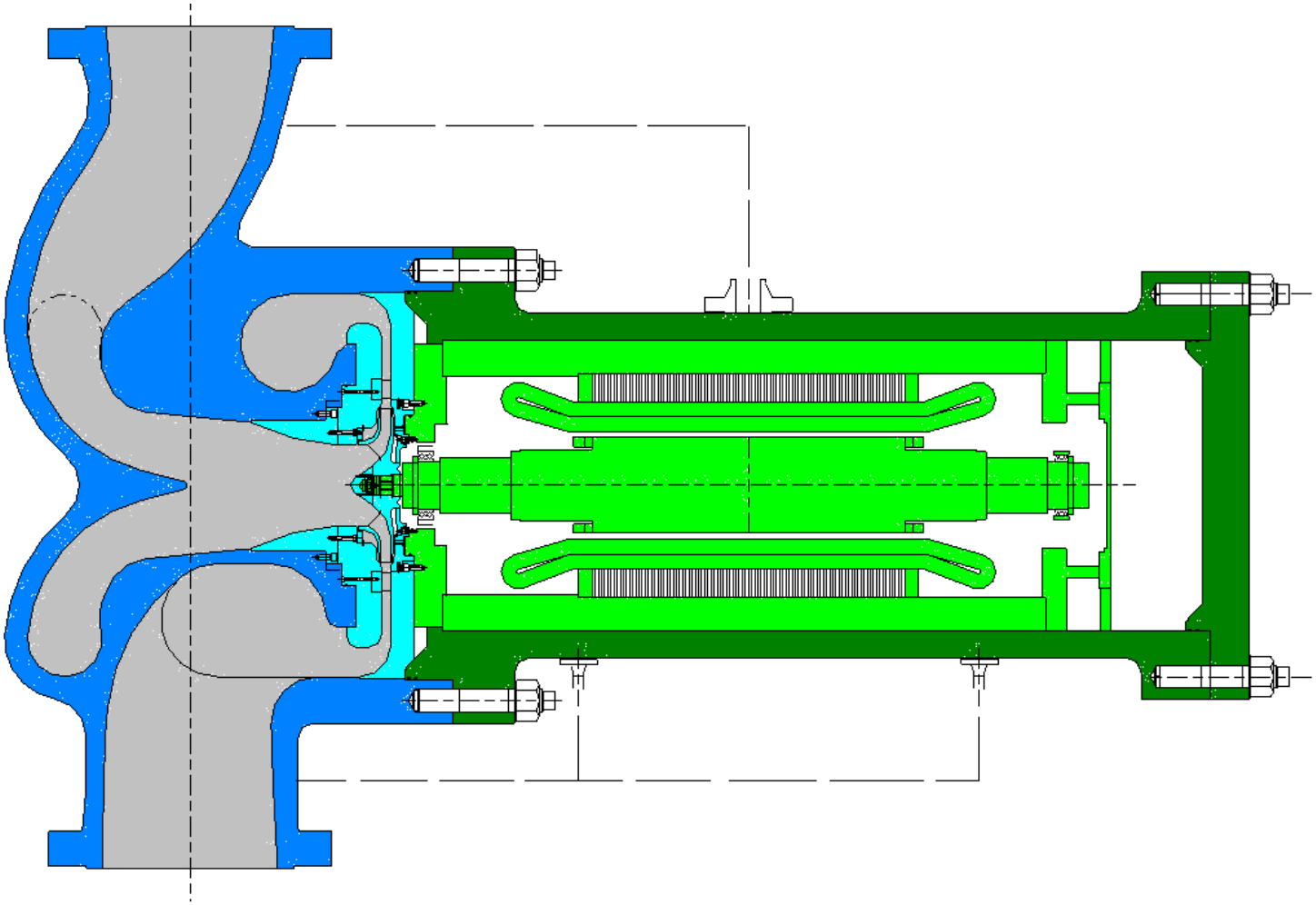

DRESSER-RAND

EMD
A Curtiss-Wright Company

ASIRobicon
Industrial Power Control

IEMDC the Concept

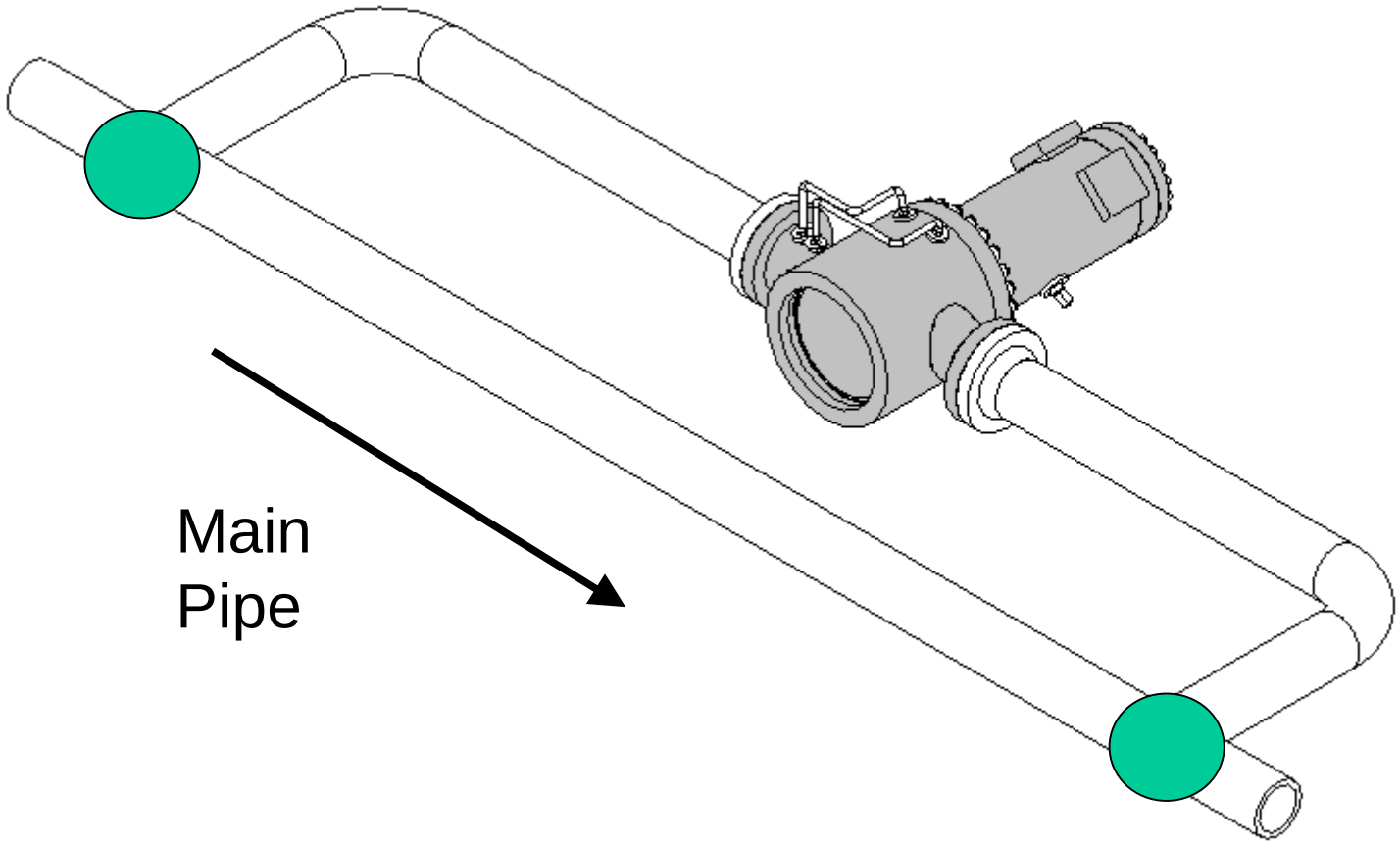

DRESSER-RAND

EMD
A Curtiss-Wright Company

ASIRobicon
Industrial Power Control

Overall Project Scope

Phase 1 Design & Development - (In-Process)

Phase 2 Prototype Manufacture - (Proposed)

Phase 3 Demonstration Testing - (Proposed)

Phase 4 Fuel Cell Integration - (Proposed)

DRESSER-RAND

EMD
A Curtiss-Wright Company

ASIRobicon
Industrial Power Control

Statement of Project Objectives

- **<u>A. Objectives</u>**
- The project objective is to design a direct-coupled, seal-less, in-line motor driven compressor (IEMDC).
- Progress design to the point of starting detailed manufacturing drawings

DRESSER-RAND

EMD
A Curtiss-Wright Company

ASIRobicon
Industrial Power Control

Statement of Project Objectives

- **<u>B. Scope of Work</u>**
- Development of the compressor aerodynamic flowpath and pressure containment
- Development of the high-speed gas-cooled motor
- Development of the motor drive specification
- Definition and engineering of the compressor/motor interfaces, including cable penetrations, gas-cooling configuration, motor mounting, system rotordynamics and system controls

DRESSER-RAND

EMD
A Curtiss-Wright Company

ASIRobicon
Industrial Power Control

Project Technical Requirements

- Totally enclosed design.
- No shaft seals to the outside environment to create an emissionless design (no site leakage or emissions)
- Potential for Installation in an underground bunker
- Compressor direct coupled to the electric motor
- Eliminate oil and lubrication hazards
- Increased operating flexibility with variable speed motor
- Reduced installation costs over alternative systems
- Application of field proven technologies
- Capable of being directly installed in the pipeline

DRESSER-RAND

EMD
A Curtiss-Wright Company

ASIRobicon
Industrial Power Control

Important Design and Commercialization Factors

- Aerodynamic design.
  - High level of efficiency
  - Wide operating range
  - Quiet operation
  - Flexible configuration for performance optimization
  - Proven aerodynamic performance predictability
- Reliable, maintainable, and serviceable
- Cost Effectiveness
  - Low manufacturing cost
  - Low capital investment and installation cost
  - Low life cycle cost

DRESSER-RAND

EMD
A Curtiss-Wright Company

ASIRobicon
Industrial Power Control

IEMDC - Case Design

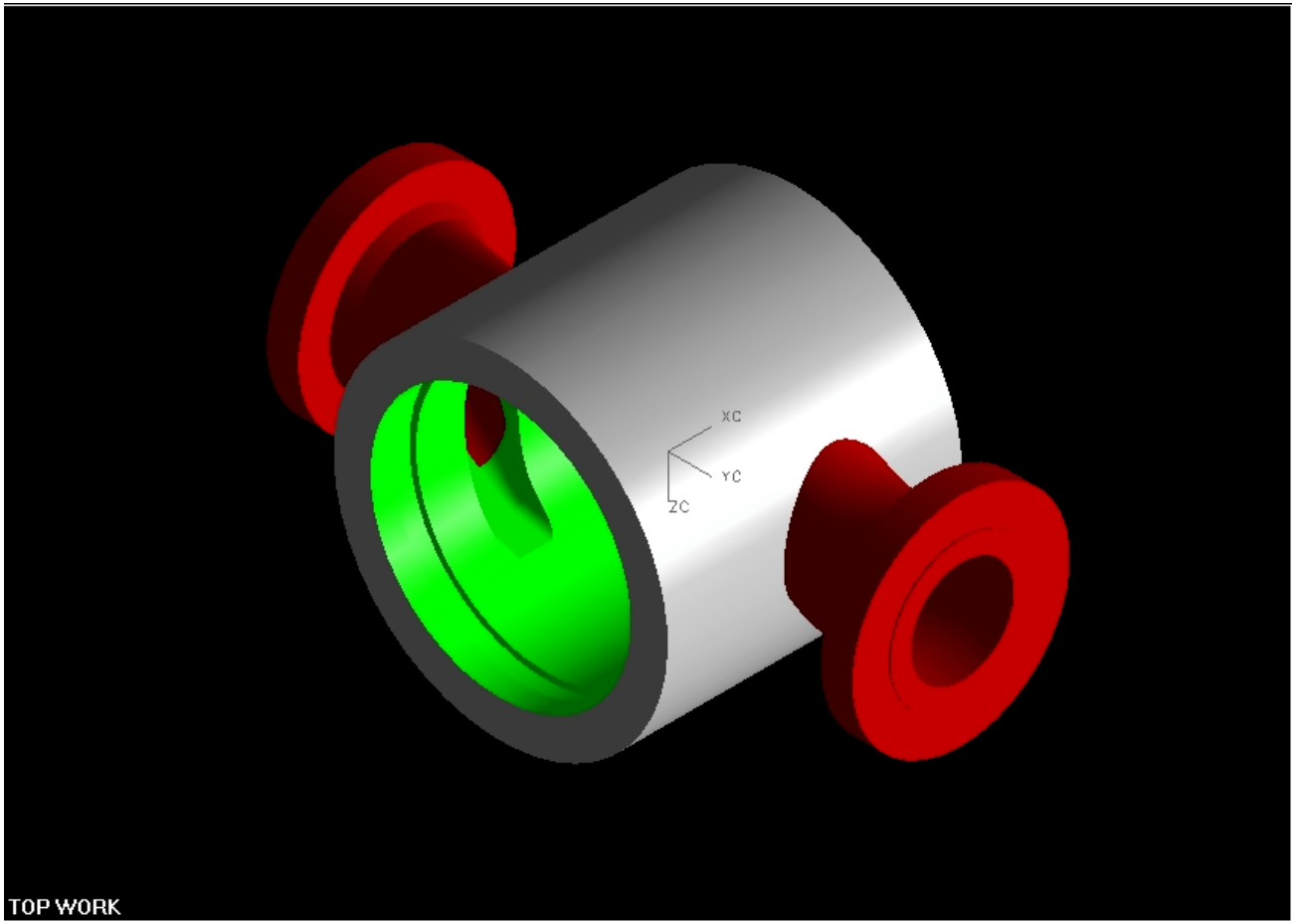

DRESSER-RAND

EMD
A Curtiss-Wright Company

ASIRobicon
Industrial Power Control

Status - Configuration

- Motor Cooling Configuration

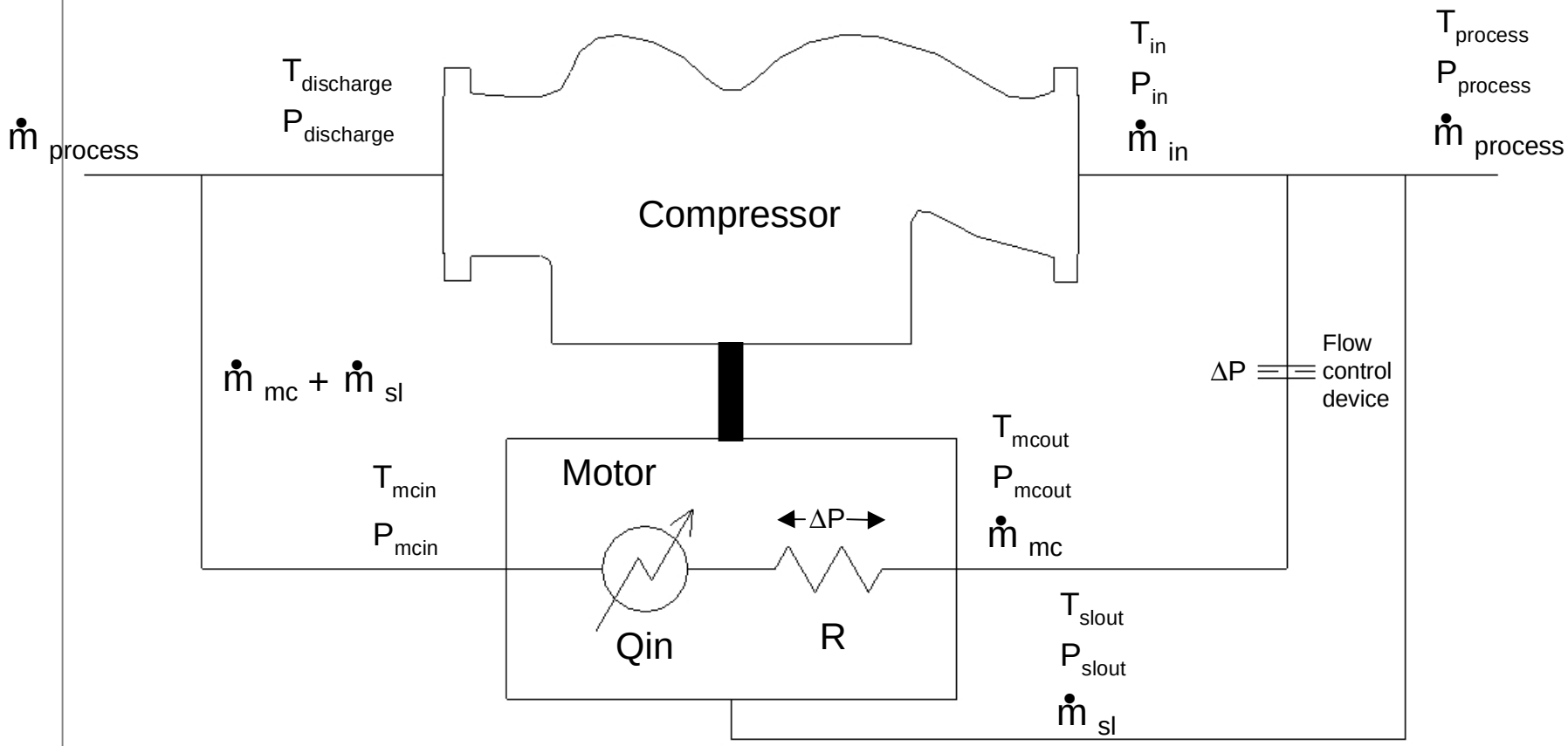

DRESSER-RAND

EMD A Curtiss-Wright Company

ASIRobicon Industrial Power Control

Status - Compressor Flowpath

- Flowpath Surfaces

Discharge

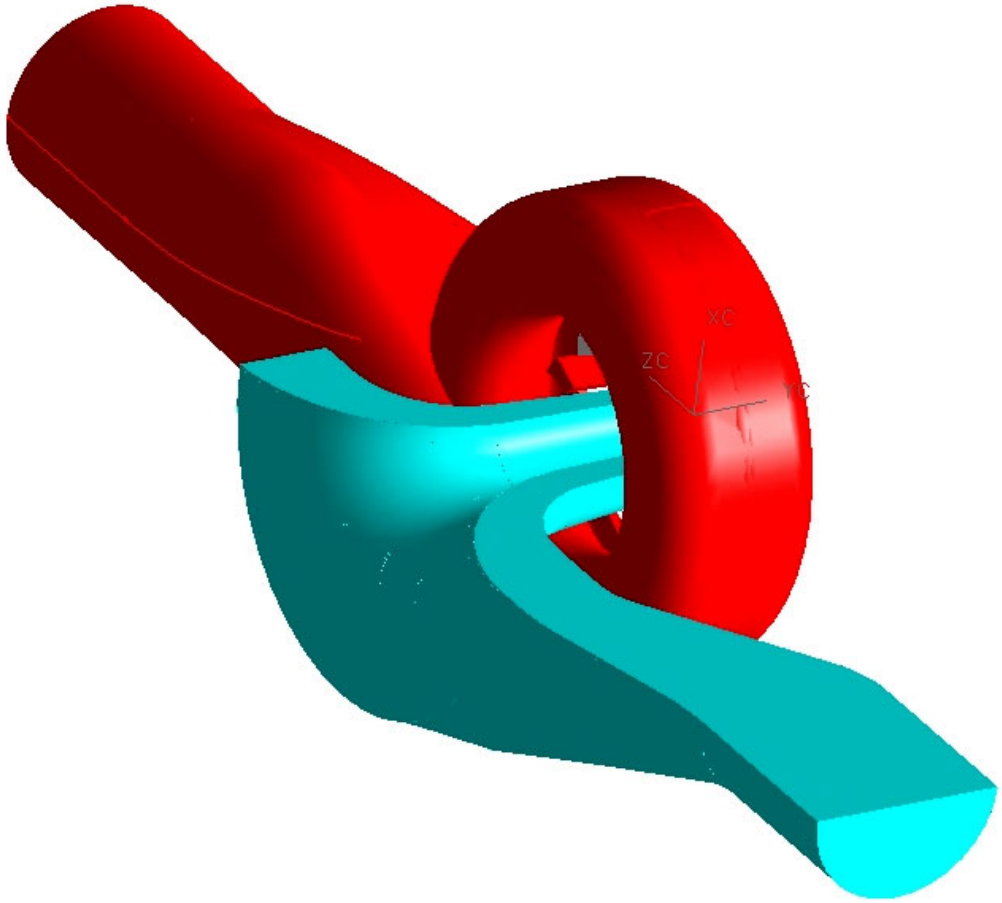

Inlet

DRESSER-RAND

EMD
A Curtiss-Wright Company

ASIRobicon
Industrial Power Control

Streamline of radial inlet

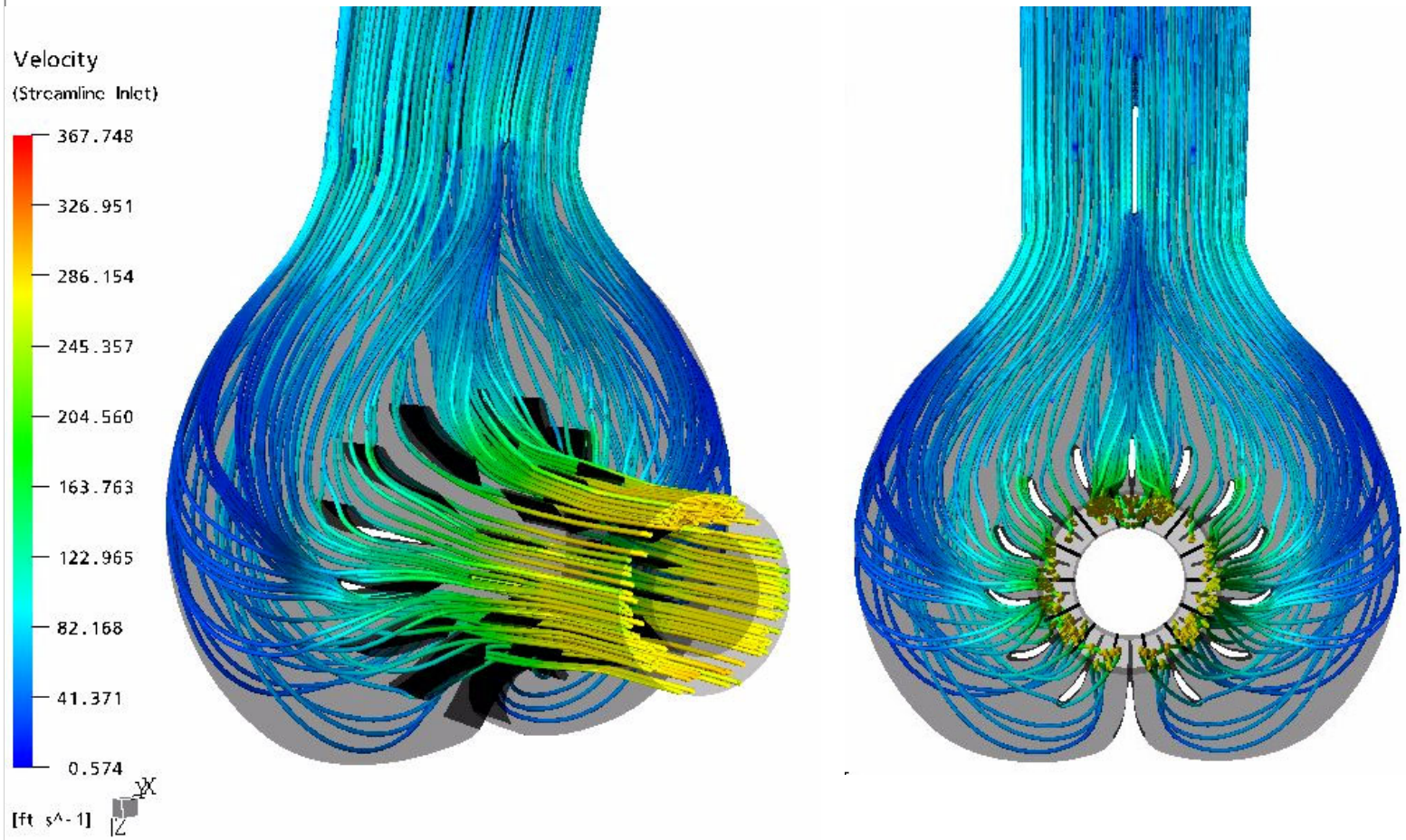

DRESSER-RAND

EMD
A Curtiss-Wright Company

ASIRobicon
Industrial Power Control

Status - Compressor

- Volute design - evaluating several configurations

Scroll Style

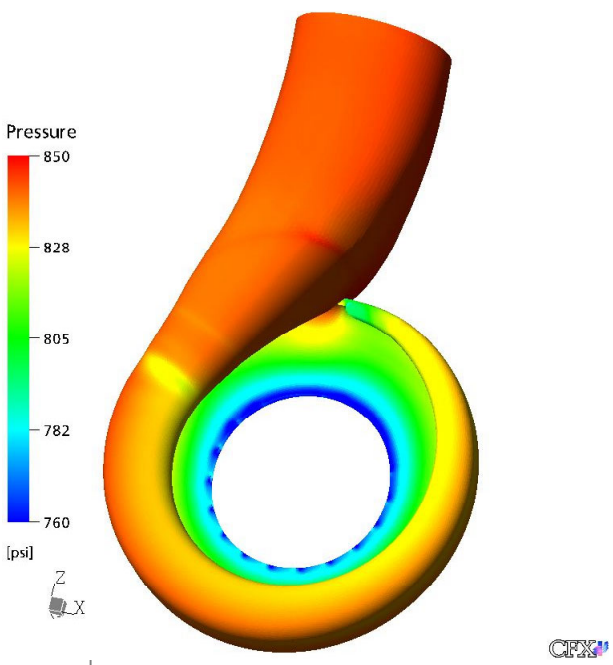

Scroll Style - Full Tongue

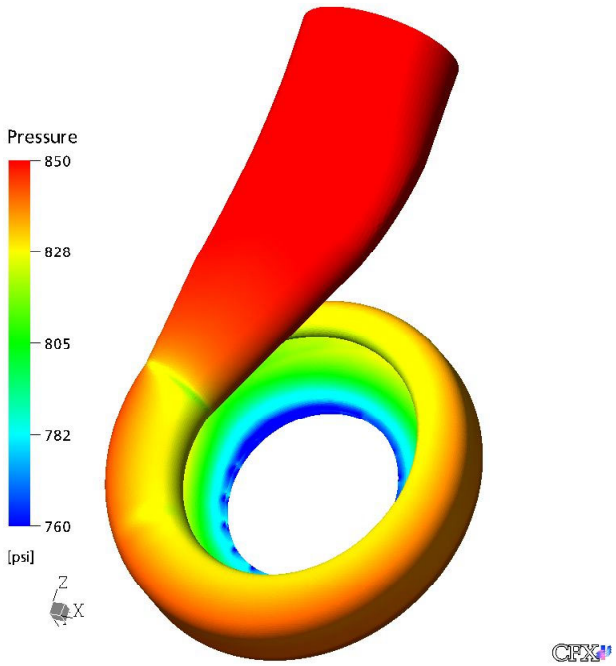

Collector

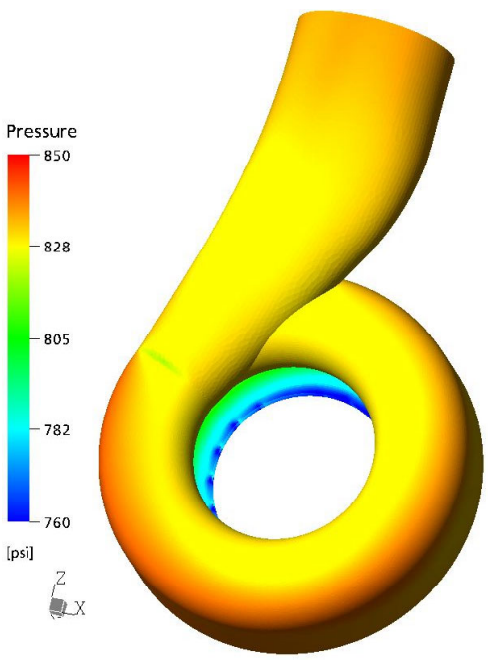

Static pressure on volute wall

DRESSER-RAND

EMD
A Curtiss-Wright Company

ASIRobicon
Industrial Power Control

High Speed Induction Motor Design

DRESSER-RAND

EMD
A Curtiss-Wright Company

ASIRobicon
Industrial Power Control

Curtiss-Wright EMD - History

- EMD formed in 1953 - a division of Westinghouse Electric Corp.
- Initial products related to Nuclear components
  - Main coolant pumps for Navy shipboard reactors
  - Pumps, valves, control rods for Westinghouse PWR plants

Curtiss Wright EMD – History (Contd.)

- Product mix expanded as Westinghouse Corp. restructured
  - 1987 – Assigned responsibility for design and manufacture of Navy Generators, originally done at W East Pittsburgh facility
  - 1998 – Absorbed the Advanced Electro-mechanical systems group from Westinghouse R&D
  - A significant portion of Westinghouse rotating electric machine capability and technology transferred to EMD
- EMD bought by Curtiss-Wright in 2001

MOTOR HIGHLIGHTS

- Design
  - Solid rotor – FEA designed
  - Compact size: about 9’ long by 3.5’ diameter
  - Single stage impeller overhung from motor shaft so as to eliminate need for additional bearings
  - Custom thermal management

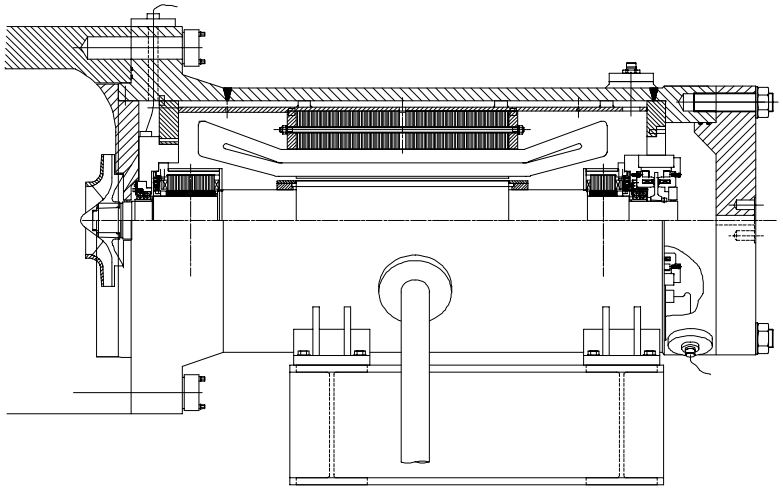

DRESSER-RAND

EMD
A Curtiss-Wright Company

ASIRobicon
Industrial Power Control

Motor Design Parameters

Parameter	Value
Motor Type	Induction
Output Power (hp/MW)	13,400/10
L-L Voltage (Volts)	6,900
Speed (rpm-sync.)	12,000
Slip (%)	0.517
Torque (ft-lb/N-m)	5895/7992
Pole Number	2
Frequency (Hertz)	200
Cooling System	Forced Ventilation w/ Methane Gas
Bearings	Active Magnetic
Efficiency (%)	94.9
Power Factor	0.788
Stator Core Outside Diamter (in./cm)	34.724/88.20

DRESSER-RAND

EMD
A Curtiss-Wright Company

ASIRobicon
Industrial Power Control

MOTOR HIGHLIGHTS (Contd.)

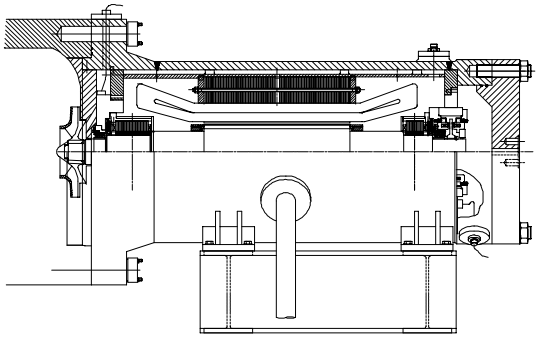

- Motor Operation
  - 10MW at 12,000 rpm
  - Excellent Life
  - Over 5000 start-stop cycles
  - Class H insulation for class F temperature
- Robustness
  - Optimized rotordynamic design that meets API 541 and API 617 requirements. Rotor is levitated on two radial magnetic bearings. Residual thrust loads controlled by magnetic thrust bearing.
  - Multiple ventilation/cooling system passages designed to preclude the possibility of obstruction by contaminants
  - Specifically designed for use with VFD for direct drive applications

DRESSER-RAND

EMD
A Curtiss-Wright Company

ASIRobicon
Industrial Power Control

MOTOR HIGHLIGHTS (Contd.)

- 95 % motor efficiency
  - Reduced eddy current stator core losses by using thin laminations
  - Minimized stator coil eddy loss by optimizing the strand sizes in both the top and bottom coils
  - Eliminated circulating currents between coil strands through strand transposition
  - Increased rotor-stator air gap to control rotor surface losses
  - Reduced bearing losses due to use of magnetic bearings

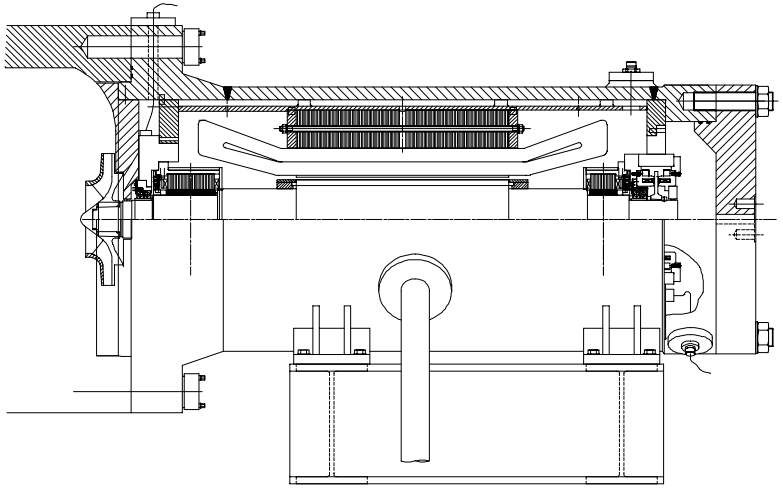

DRESSER-RAND

EMD
A Curtiss-Wright Company

ASIRobicon
Industrial Power Control

Summary

- The design feasibility of a direct drive, robust, highly efficient, and high-speed motor has been demonstrated. The motor is powered by a variable speed drive. It is capable of delivering13,400 HP, at 12,000 rpm, to the integral pipeline compressor that is mounted on the motor shaft.
- The motor is cooled by a portion of the high pressure discharge gas from the compressor, thereby eliminating the need for extra blower fans and heat exchangers.
- The motor-compressor system is levitated by active magnetic bearings, thus eliminating lubrication hazards. Because of the use of magnetic bearings, the health of the pipeline compressor station can be monitored from a remote location, providing economic benefits.

Multilevel Series PWM Medium Voltage Adjustable Speed Drive

Overview

DRESSER-RAND

EMD
A Curtiss-Wright Company

ASIRobicon
Industrial Power Control

A Proven & Integrated ASD System

Isolation Transformer	Included
Harmonic Filtering	Inherent
Power Factor Correction	Inherent
Power Converter	Included
Motor Filter	Inherent

DRESSER-RAND

EMD
A Curtiss-Wright Company

ASIRobicon
Industrial Power Control

POWER TOPOLOGY

6600–7200 Volt Drive

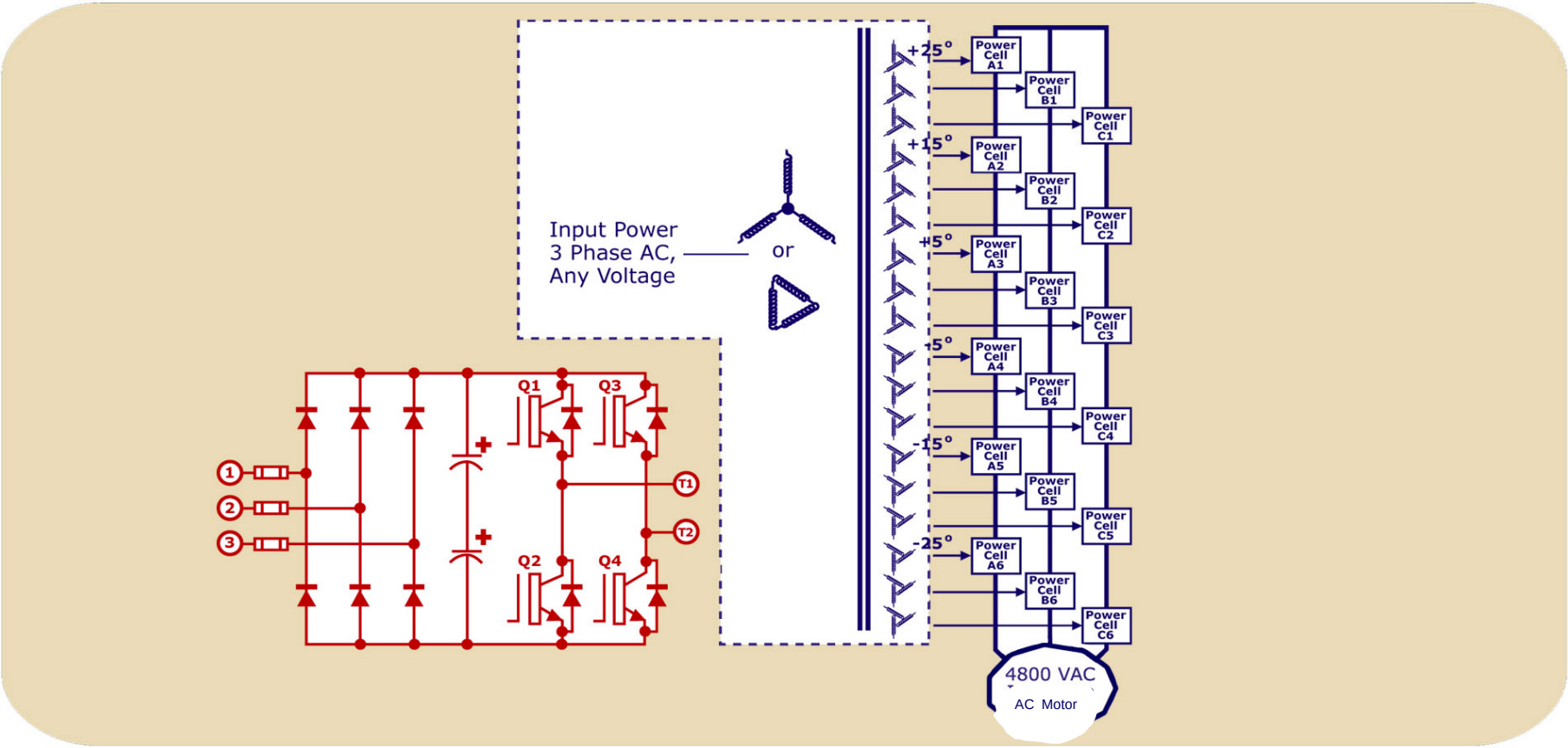

DRESSER-RAND

EMD
A Curtiss-Wright Company

ASIRobicon
Industrial Power Control

ASD INPUT VOLTAGE & CURRENT WAVEFORMS

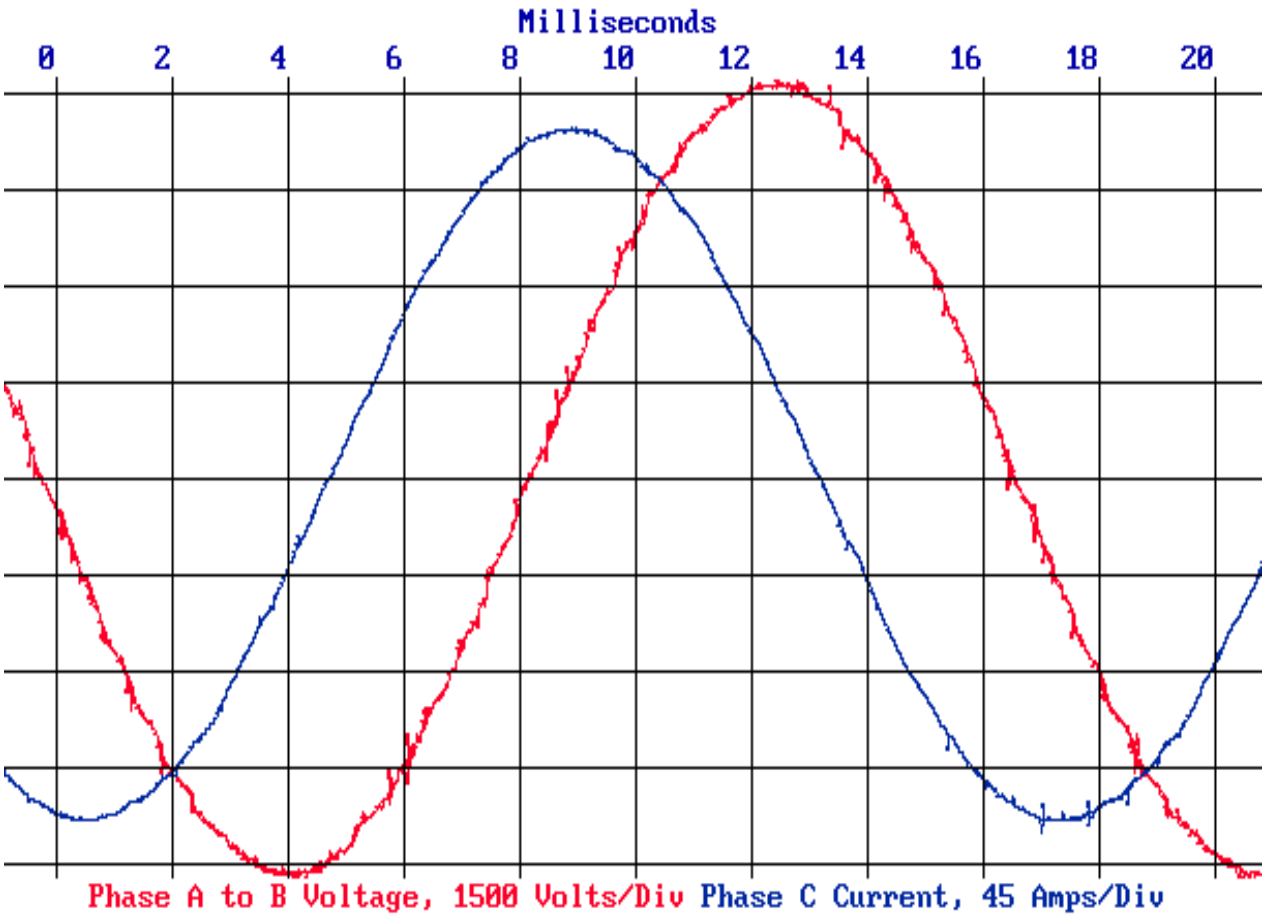

DRESSER-RAND

EMD
A Curtiss-Wright Company

ASIRobicon
Industrial Power Control

Measured Input Power Factor

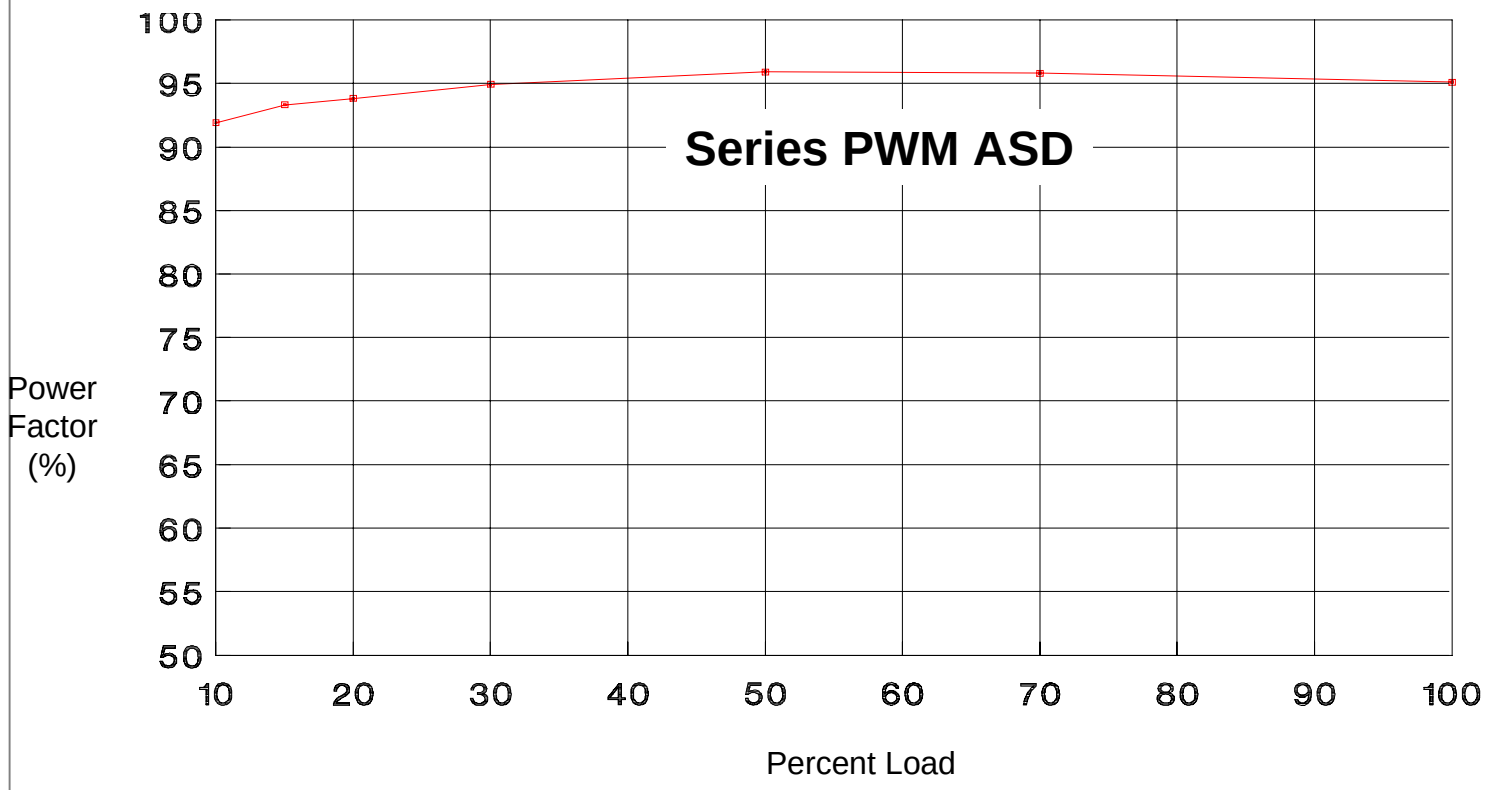

Total power factor includes distortion and displacement power factor.

DRESSER-RAND

EMD
A Curtiss-Wright Company

ASIRobicon
Industrial Power Control

ADDITION OF THREE CELL OUTPUTS TO CREATE PHASE VOLTAGE

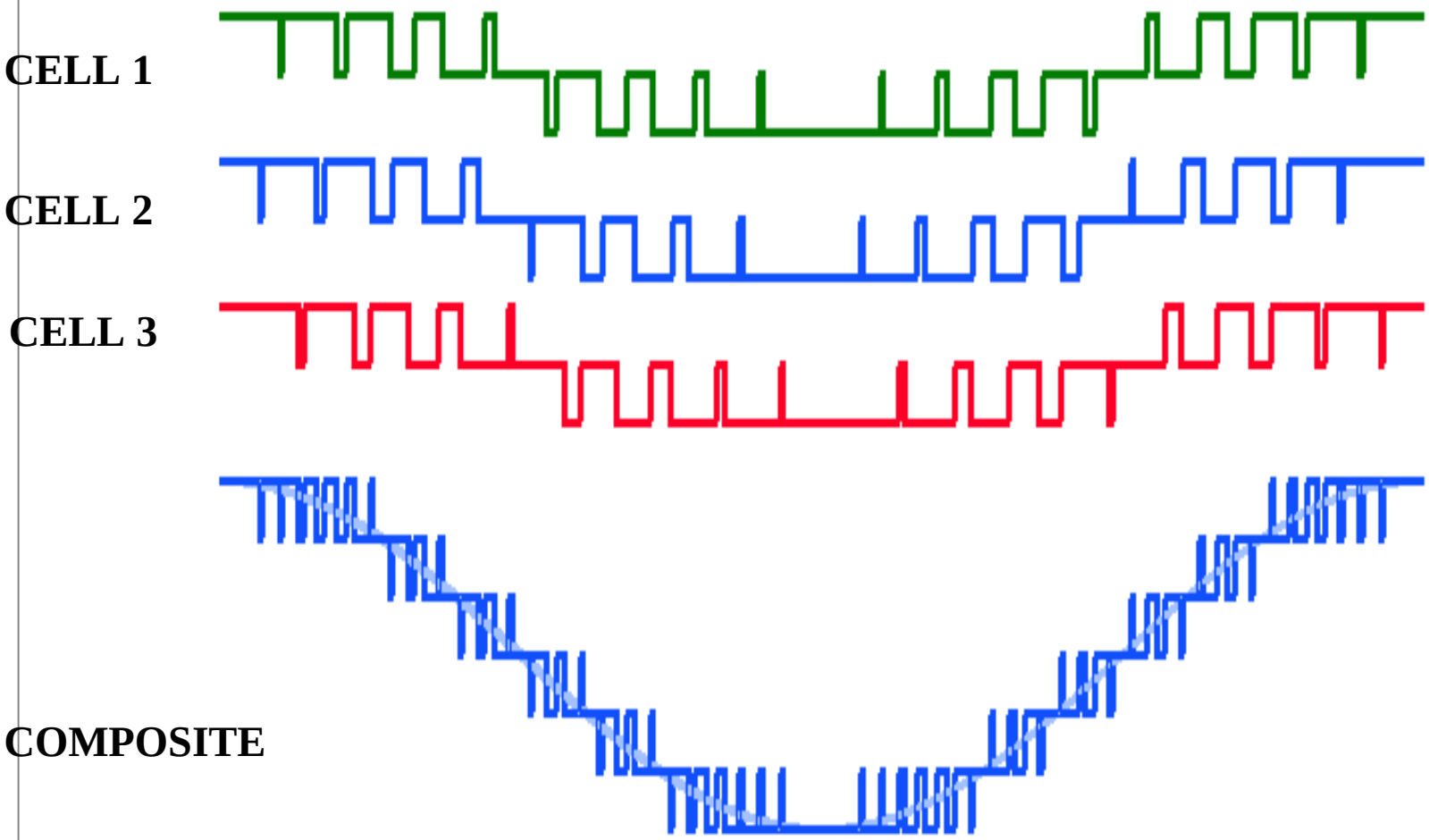

DRESSER-RAND

EMD
A Curtiss-Wright Company

ASIRobicon
Industrial Power Control

ASD OUTPUT VOLTAGE & CURRENT WAVEFORMS

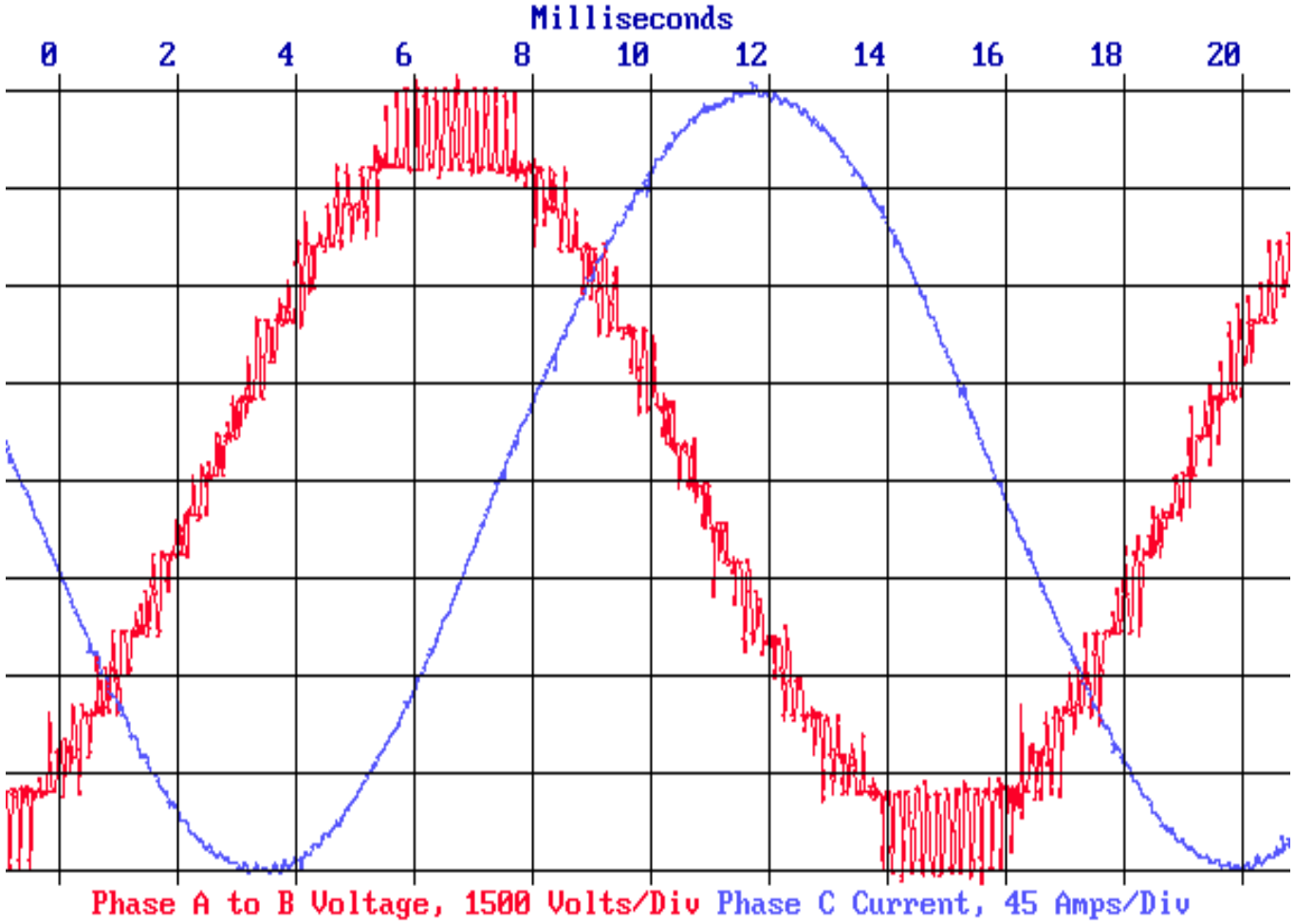

DRESSER-RAND

EMD
A Curtiss-Wright Company

ASIRobicon
Industrial Power Control

Available Power Ratings / Output Voltage

400 HP	to	5,500 HP	@	2,300 VAC
400 HP	to	8,000 HP	@	3,300 VAC
400 HP	to	10,000 HP	@	4,160 VAC
1,000 HP	to	60,000 HP	@	7,200 VAC
1,000 HP	to	75,000 HP	@	13,800 VAC

400 HP	to	8,500 HP	Air Cooled
4,000 HP	to	75,000 HP	Liquid Cooled

DRESSER-RAND

EMD
A Curtiss-Wright Company

ASIRobicon
Industrial Power Control

Air Cooled Power Cell

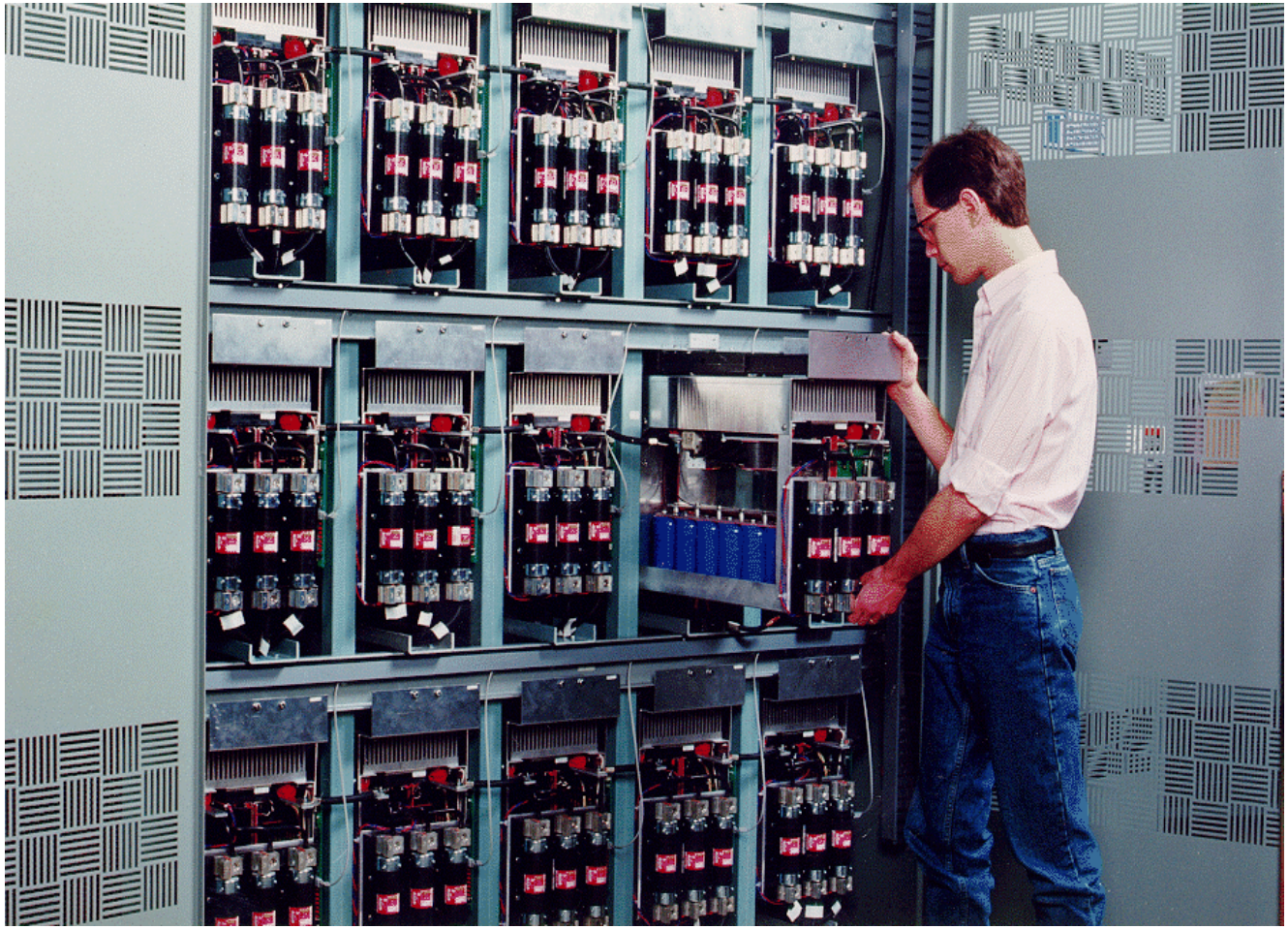

DRESSER-RAND

EMD
A Curtiss-Wright Company

ASIRobicon
Industrial Power Control

Water Cooled Power Cell

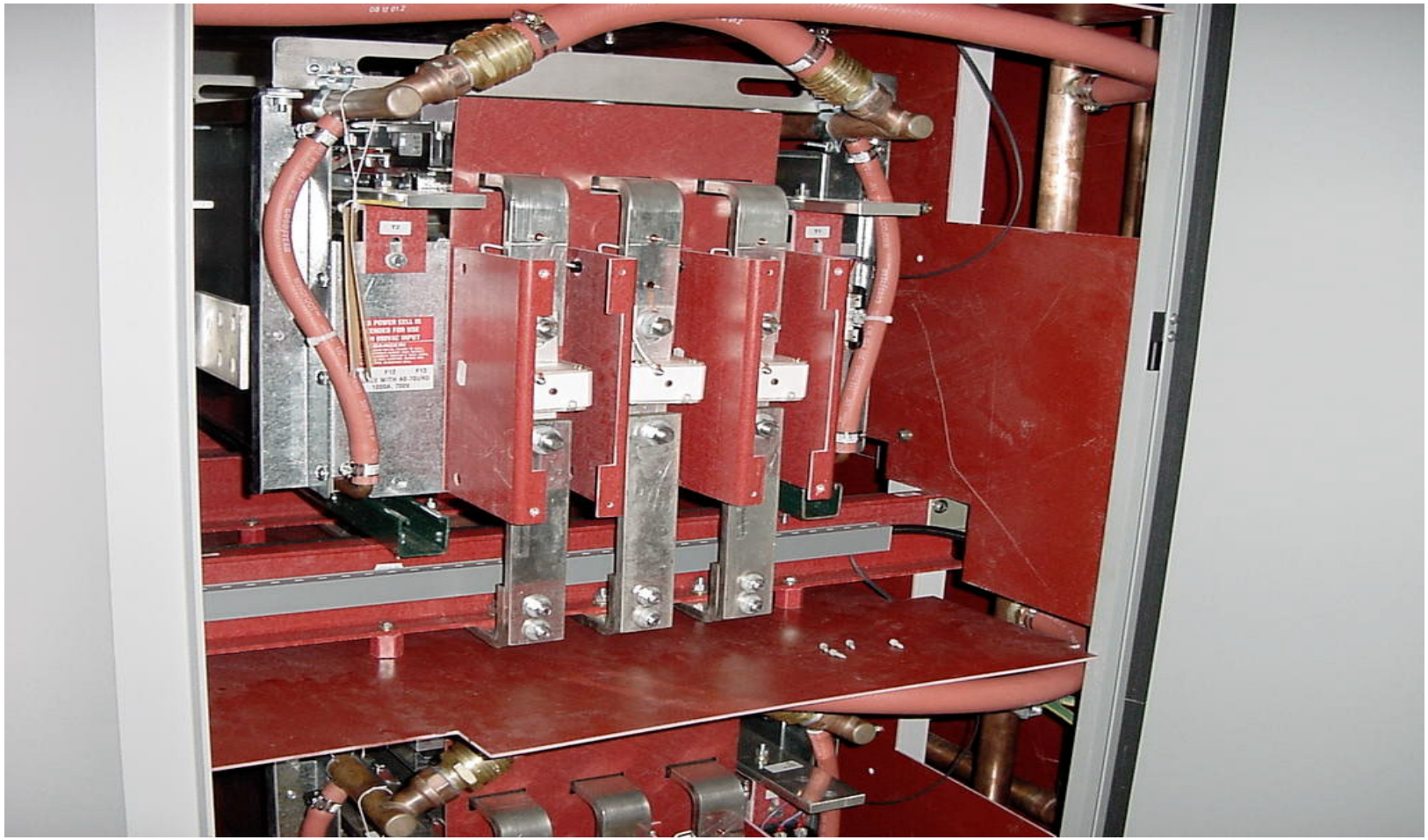

DRESSER-RAND

EMD
A Curtiss-Wright Company

ASIRobicon
Industrial Power Control

2 x 100% Water-To-Water Heat Exchanger

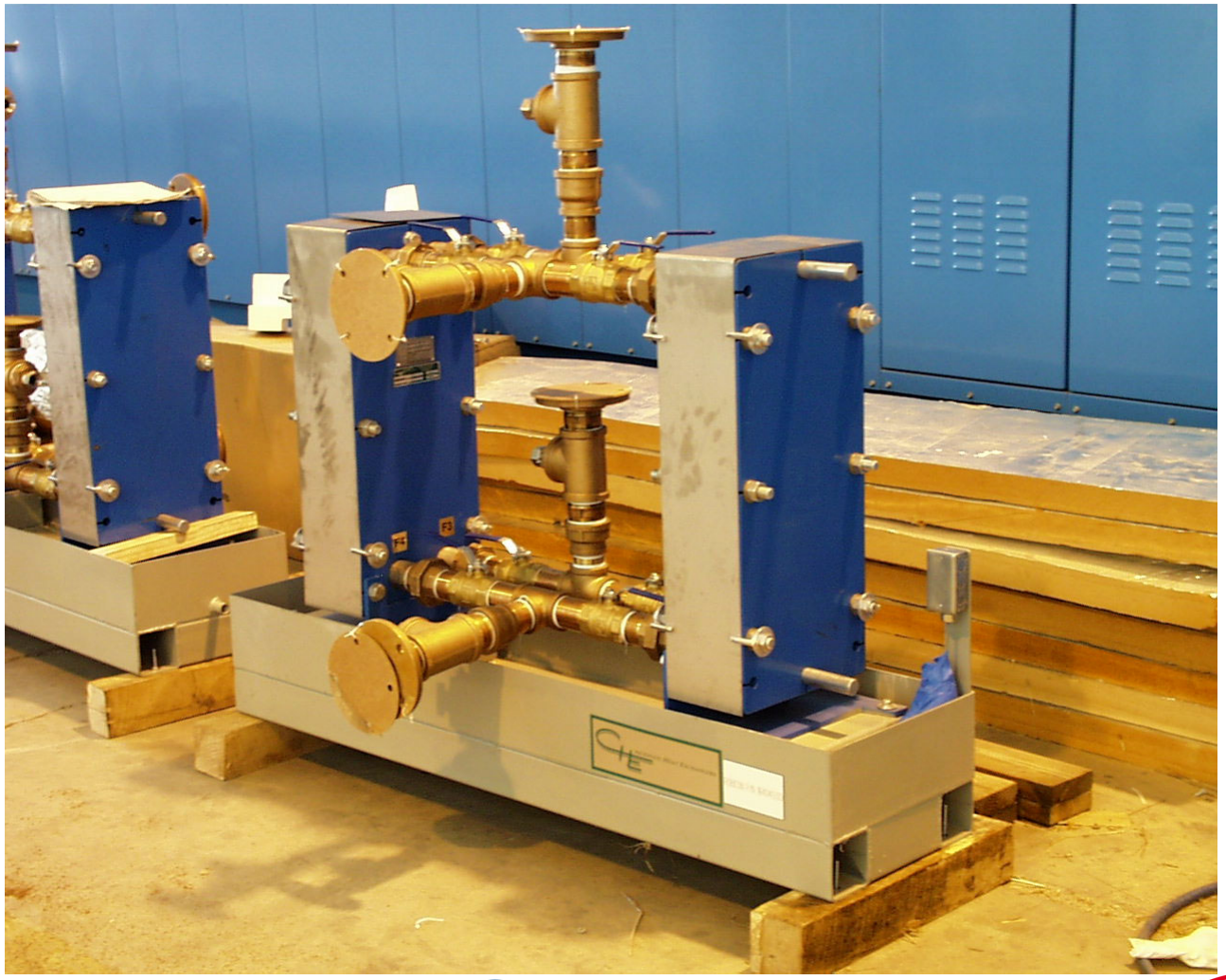

DRESSER-RAND

EMD
A Curtiss-Wright Company

ASIRobicon
Industrial Power Control

Water-To-Air Heat Exchanger

DRESSER-RAND

EMD
A Curtiss-Wright Company

ASIRobicon
Industrial Power Control

11,000 HP, 13.8/6.6 kV ASD

DRESSER-RAND

EMD
A Curtiss-Wright Company

ASIRobicon
Industrial Power Control

Integrated System Delivery

DRESSER-RAND

EMD
A Curtiss-Wright Company

ASIRobicon
Industrial Power Control

Multilevel Series PWM ASD Proven Performance

- First System Delivered - 1994
- Products in Use > 2000
- Products Installed per Year > 300
- High Capacity Products (5,000 HP +) > 1 per wk
- Current Product Generation - 3
- Output Voltages Available (2.3 to 13.8 kV)
- Largest Unit – 60,000 HP
- Critical To Process Experience
  - 5 Year Continuous Service with 4 - 9 Availability
  - (ref. IEEE - PCIC-2001-09)

DRESSER-RAND

EMD A Curtiss-Wright Company

ASIRobicon Industrial Power Control

Other Related Experience

- 12 Mag Bearing Supported Compressors Built
- Over 60 motor / compressor packages with VFD's
- The IEMDC is the marriage of these two proven technologies

DRESSER-RAND

EMD
A Curtiss-Wright Company

ASIRobicon
Industrial Power Control

IEMDC - Compressor Summary

- Proven Aerodynamic Design
- No Rotating Seals against Atmosphere
  - Improved Reliability
  - Reduced Maintenance
- Modular Construction for ease of Installation
- Future Uprate-ability

DRESSER-RAND

EMD
A Curtiss-Wright Company

ASIRobicon
Industrial Power Control

Faster Response & Flexible

- Electric Drives can Start & Stop as needed
- Zero to full load in minutes
- Adjustable output
- Able to meet the needs of volatile power generation applications
- VFD reduces transmission system impacts
- Clean and Green, no on-site emissions

DRESSER-RAND

EMD
A Curtiss-Wright Company

ASIRobicon
Industrial Power Control

Fuel Cell Implications

- Future on-site, high-efficiency generation
- Hydrogen extracted form methane to run fuel cell
- Assumes capital cost and technical issues will be overcome
- Improved reliability
- Not subject to power outage
- Received proposal from SWRI for independent project

IEMDC Highlights

- No building required
- Very quiet operation
- No site emissions
- Interchangeability
- No external cooling required
- Minimal piping
- Small site

DRESSER-RAND

EMD
A Curtiss-Wright Company

ASIRobicon
Industrial Power Control

IEMDC Summary

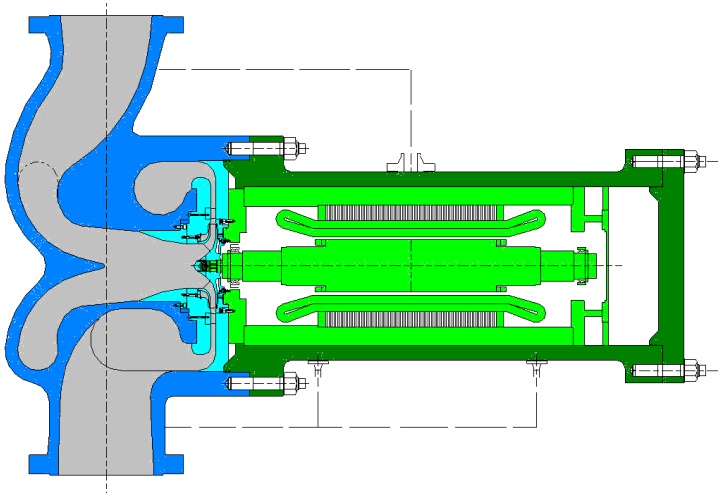

- Lowest capital cost
- Lowest Operating Cost
- Minimal Environmental Impact
- Conserves Energy Resources
  - Global energy efficiency 52% up from 35%
- Application is any clean, dry, oxygen free pipeline

DRESSER-RAND

EMD
A Curtiss-Wright Company

ASIRobicon
Industrial Power Control

DRESSER-RAND

www.dresser-rand.com
info@dresser-rand.com

© Copyright 2002