Quarterly Report: January 2007

Methane Recovery from Hydrate-bearing Sediments

Funding Number: DE-FC26-06NT42963

Submitted By:

J. Carlos Santamarina
Georgia Institute of Technology
School of Civil and Environmental Engineering
Atlanta, GA 30332-0355
Phone: (404)-894.7605
Fax: (404)-894.2278
E-mail: jcs@gatech.edu

Costas Tsouris
Oak Ridge National Laboratory
Georgia Institute of Technology
School of Civil and Environmental Engineering
Atlanta, GA 30332-0373
E-mail: costas.tsouris@ce.gatech.edu

SUMMARY:

Task 1.0 **Research Management Plan**
Done

Task 2.0 **Technology Status Assessment**
Done

Task 3.0 **Continuous Literature**
In Progress

Task 4.0 **Studies at the Mineral Surface Scale (1D-interface phenomena)**
In progress

Details on the progress of Task 4 follow.

Subtask 4.1 Experimental studies – Phenomena and properties

4.1(a): Cell design and construction (done)

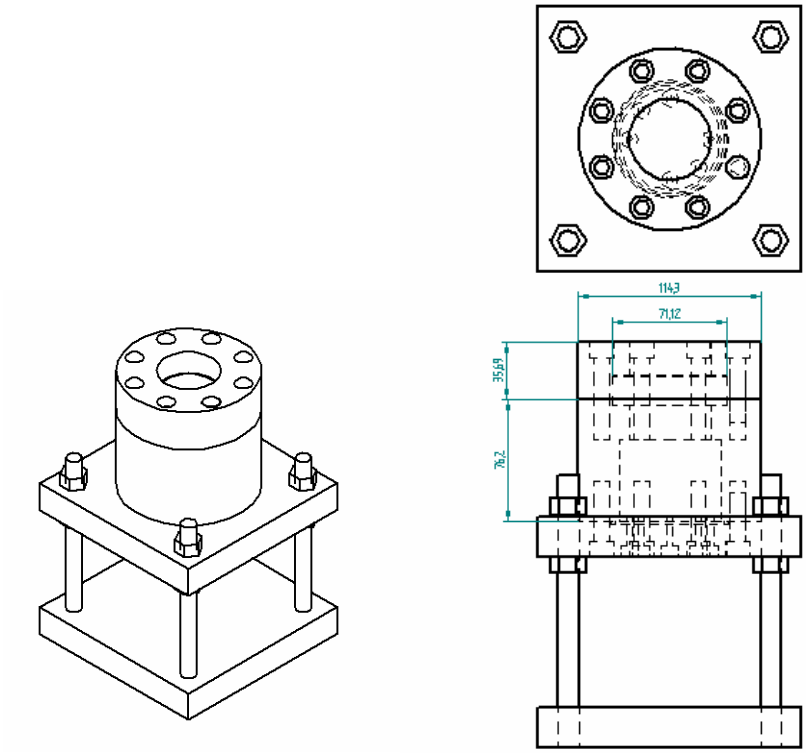

- Material: stainless steel pressure chamber (design pressure: 30MPa)
- Features: 2-inch transparent optical window, 4 accessible ports compatible with electrical feed-through wires

4.1(b): Instrumentation and peripheral electronics (designed/ordered)

Electrical feedthrougha (standard and thermocouple)
Optical feedthrough
Pressure control panel
Refrigerator, coil and sleeve
Safety features - shield

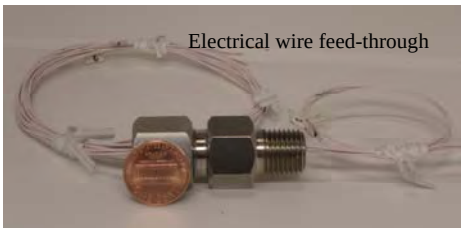

4.1(b): Impedance & conductivity (built - under calibration)

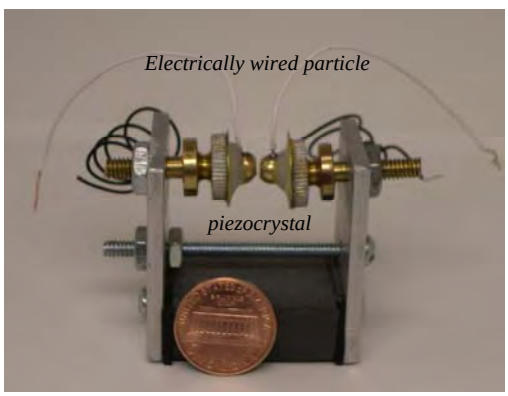

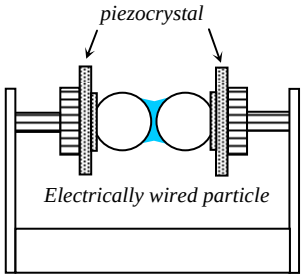

- Material: various concentrations of saline water, CO_2 / CH_4 gases
- Properties: evolution of electrical conductivity σ_{el} and spectral evolution of impedance change during hydrate formation
- Input and output signals travel via electrical feed-through under pressure.
- Design and test configuration done // tests in progress.

4.1(d): Mineral bonding strength (under construction)

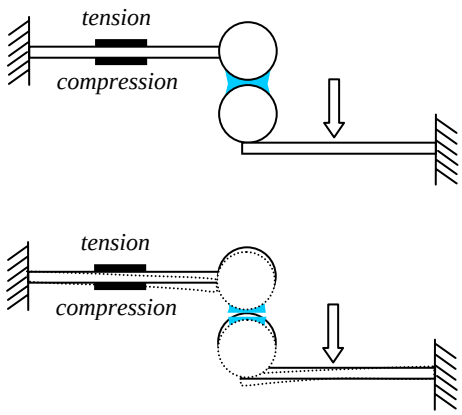

- Material: different mineral substrates (quartz, mica, calcite) and CH_4 gas
- Property: mineral bonding strength between mineral substrate and hydrates
- One particle is attached to the sensing rod which is anchored to the inside wall of the pressure cell
- After hydrate formation, another particle is pulled out to induce the tension
- The sensing rod housing full-bridge strain-gauges measures the resistance which will be calibrated into mineral bonding strength.
- Design and manufacturing in progress

Subtask 4.2 Analytical studies – Intrinsic kinetic model development

The first step in this task was to develop the framework and theoretical basis for the model development. Since the model is based on the difference between the chemical potential at imposed dissociation conditions and the chemical potential at equilibrium, a thorough examination for the current thermodynamic model for gas hydrates was needed. In the past quarter, we consulted the literature related to the development of the original hydrate thermodynamics model (in the year 1957) and subsequent updates. The following needs in terms of adjustments to the present models were identified:

1. Improved description of guest molecule – hydrate cage interactions, by the utilization of a modified Kihara potential to include interactions with surrounding cages.
2. Choice of a different standard state for chemical potential of water to minimize the utilization of empirical expressions.
3. Include a term accounting for capillary pressure in the expression for chemical potential of water in the standard state.
4. Application of a minimization technique to hydrate equilibrium in order to predict quantities and compositions of phases present at equilibrium conditions.

The initial approach to quantify the driving force will be the application of series expansion around the equilibrium point. In that regard, we are looking into the open literature in order to develop expressions for variations of chemical potential in terms of

identified primary variables, i.e, pressure, temperature, composition of aqueous phase, and other forms of energy. Although, dependency of chemical potential on temperature and pressure has been developed while developing the current treatment of hydrate equilibrium thermodynamics, as stated earlier, they are mainly empirical. Expressions for variations of chemical potential in terms of other primary variables are non-existent, and we are working on developing those based on rigorous theoretical analysis.

Once the mathematical expression for the intrinsic kinetics of hydrate dissociation is ready, it will be included in a simple material balance to account either for water content, hydrate content, or gas content inside a control volume equivalent to the GA Tech pressurized cell. A numerical solution for the mass balance will be coded in Fortran 95. Simulation results at conditions equal to the experimental ones will be used for purposes of model validation.

The slowest part in the present subtask is the development of the model itself. Once a clear "picture" of how dissociation occurs is achieved, and a reliable mathematical expression describing this process is available, the generation of a solution is only a matter of successful application of numerical methods.