IV.A.12 Combined Theoretical and Experimental Investigation and Design of H_2S Tolerant Anode for Solid Oxide Fuel Cells

Madhivanan Muthuvel, Andres Marquez, Gerardine Botte (Primary Contact)
Department of Chemical and Biomolecular Engineering, Ohio University
183 Stocker Center
Athens, OH 45701
Phone: (740) 593-9670; Fax: (740) 593-0873
E-mail: botte@ohio.edu

DOE Project Manager: Briggs White
Phone: (304) 285-5437
E-mail: Briggs.White@netl.doe.gov

Objectives

- Determine the mechanism for solid oxide fuel cell (SOFC) anode deterioration by H_2S gas found in coal syngas.
- Employ molecular modeling to study the interaction of the anode with chemical species.
- Confirm the theoretical model with experiments and surface analysis.

Accomplishments

- Established the detrimental influence of H_2S on H_2 oxidation at the nickel oxide in yttria-stabilized zirconia (Ni-YSZ) anode from quantum chemistry calculations – binding energies for pure H_2 were reduced from -89.5 to -23.2 kcal/mol in the presence of H_2S.
- Confirmed the need of moisture for gas mixtures containing CO – binding energy for pure CO was increased from -26.9 to -76.6 kcal/mol with H_2O molecule.
- Predicted infrared and Raman spectra from quantum chemistry calculations.
- Molecular dynamics calculations confirmed the slow diffusion of H_2 in Ni-YSZ interface is due to the presence of H_2S gas molecules.
- Built a new solid oxide fuel cell testing station.

Introduction

The SOFC is a high temperature fuel cell which operates at 850-1,000°C. The SOFC is a viable option for a high temperature hydrogen fuel source. One of the high temperature hydrogen sources is coal syngas. Burning coal produces a gas known as coal syngas, which contains hydrogen along with other chemical species such as CO and CO_2. Since a SOFC operates at high temperature, the presence of CO and CO_2 in coal syngas will not affect its performance. However, coal syngas also contains H_2S at high concentrations (between 0.5-5%) depending on where the coal is mined [1]. A commonly used anode material for SOFCs is Ni-YSZ. When H_2S containing gas comes in contact with a Ni-based anode, deterioration of the anode is inevitable. Most of the experimental research in the area of SOFCs has been focused on development of new anode materials for sustaining H_2S attack. In this project, we concentrate on understanding the mechanism of anode (Ni-YSZ) deterioration by H_2S gas, present in the coal syngas, using molecular modeling. We also want to establish validity for the predicated theoretical models by performing experiments. Hence, objectives for this project are to determine the mechanism for H_2S interaction with the Ni-YSZ anode and recommend either preventive measures for the Ni-YSZ anode or a new sulfur tolerant anode material.

Approach

This investigation is aimed at covering both theoretical and experimental aspects of H_2S interaction with the Ni-YSZ anode material. Theoretical study was based on molecular modeling of all the gaseous species (H_2, H_2S, CO) involved with Ni-YSZ. Molecular modeling comprises both quantum chemistry (QC) and molecular dynamics (MD) calculations for the proposed system. QC calculation was performed using Gaussian 03 software involving the density functional theory (DFT) method and LANL2DZ basis set. In addition to optimizing the structures of the anode material and other gas molecules, the QC calculations can also predict infrared and Raman spectra for each system. Physical properties of these systems were predicted in MD calculations using Cerius2 (v. 4.8) software. The parameters predicted include diffusion coefficient of gas species interacting with the Ni-YSZ surface and the packing and orientation of the chemical species at the surface of the anode material. A detailed explanation of the steps involved in molecular modeling is described in our publication [2]. Using the information from theoretical studies, experiments will be carried out to confirm the predications from the molecular models. A set-up will be constructed to perform various SOFC experiments comprising different gas compositions as well as to perform surface analysis of the SOFC anode to validate the mathematical models.

Results

The initial studies about the construction of the anode molecule and performing QC calculations to optimize the anode and various systems along with MD studies have been explained in our last year's annual report [3]. QC calculations of the different systems with the Ni-YSZ anode have been listed in Table 1. We have included moisture or the H_2O molecule in the gas stream for modeling because experimentally, the Ni-YSZ anode is known to get clogged with carbon deposits from the presence of CO in the gas stream. When H_2, H_2S and CO are present individually, the binding energies indicate an oxidation trend of H_2 (-89.5 kcal/mol) > CO (-26.9 kcal/mol) > H_2S (-24.2 kcal/mol), but with the addition of moisture to the pure gas components all the binding energies are changed.

Presence of H_2O with H_2 drops the binding energy from -89.5 to -39.9 kcal/mol whereas moisture with CO increases its oxidation from -26.9 to -76.6 kcal/mol, which confirms the experimental observation to add moisture for CO containing gas streams. On combining H_2S with H_2, we get a binding energy of -23.2 kcal/mol, which is less than the -51.1 kcal/mol binding energy found from adding the H_2O molecule to H_2 and the H_2S system. For the systems devoid of moisture, H_2 oxidation on the anode surface was most favorable when pure H_2 gas (-89.5 kcal/mol) was used and least favorable with the $H_2 + H_2S$ system (-23.2 kcal/mol). Presence of CO in H_2 gas helped oxidation of H_2 (-40.3 kcal/mol) as compared to the $H_2 + H_2S$ system, which was evident in the anode + H_2 + H_2S + CO system (-58.5 kcal/mol) where CO helped H_2 oxidation by hindering H_2S attack on anode surface.

Continuing on the first principle calculations, we have predicted spectroscopic data (infrared and Raman) for all the systems, which will be very useful information for comparison with experimental analysis. Raman spectrum gives information about the chemical species present on the surface of the anode material; it is more like a signature for each chemical molecule. In Figure 1, we have shown a few Raman spectra from different systems we have studied over a frequency range where chemical species which adsorbed to the anode surface can be identified. Each system has at least one distinguishable peak. For example, the anode + H_2 + H_2S has two peaks near 200 Hz, and a high, intense peak very close to 600 Hz was found if CO was mixed with the H_2 and H_2S gas mixture. We are expecting similar results from the Ni-YSZ anode surface after performing SOFC testing experiments.

MD calculations were performed on a system, anode + H_2 + CO (1%) + H_2O (1%), to determine the effect of moisture in CO containing gas mixture. The radial distribution function (RDF) plots provide information on the packing and orientation of the chemical species on the anode surface. The RDF plot for this system at 850°C illustrates a similar trend as other RDF plots; the Ni atom on the anode surface was the active site for H_2 oxidation but at the same time carbon from CO also displayed affinity towards the Ni atom. Interatomic distance between Ni and H atoms was 2 Å as compared to 3.2 Å for the Ni-C pair, which suggests CO could to some extent hinder H_2 oxidation at Ni sites. In addition to the RDF plots, an MD calculation also predicts the diffusion coefficient for the gas molecules at the interface of the anode surface. A pure H_2 over Ni-YSZ anode has a diffusion coefficient of 1.35×10^{-4} cm^2/s and with the addition of 2% CO, H_2 diffusivity drops down to 5×10^{-6} cm^2/s because of CO interference with Ni active sites. For the anode + H_2 + CO (1%) + H_2O (1%) system, H_2 has a much lower diffusion coefficient (4.9×10^{-7} cm^2/s), almost one order lower than the anode + H_2 + CO (2%) gas mixture because moisture at a very high temperature of 850°C can easily affect H_2 diffusion through the anode material. Moisture had not only affected H_2 transport but also the diffusion coefficient of CO by dropping it to 6.4×10^{-8} from 3×10^{-7} cm^2/s.

TABLE 1. Binding Energies for Various Gas Compositions with and without Moisture

Systems	Binding Energy (kcal/mol)	
	Without H_2O	With H_2O
Anode (Ni-YSZ)	-128.3	-40.8
Anode + H_2	-89.5	-39.9
Anode + H_2S	-24.2	-48.9
Anode + CO	-26.9	-76.6
Anode + H_2 + H_2S	-23.2	-51.1
Anode + H_2S + CO	-61.5	-56.0
Anode + H_2 + CO	-40.3	Computing
Anode + H_2 + H_2S + CO	-58.5	Computing

The data obtained from mathematical calculations has to be verified experimentally before concluding the theoretical models as the mechanism for anode destruction or a tool to understand the interaction of H_2, H_2S and CO molecules with the Ni-YSZ anode. The experimental phase started after half of the theoretical studies have begun. A new design for SOFC testing was developed over the last year. This design was primarily focused on studying the anode electrode in a SOFC. In Figure 2a, the quartz tube assembly is illustrated, which is different from the commonly used long tubular ceramic SOFC testing set up. The quartz tube assembly consists of two quartz tubes with the outer tube used for sealing the cathode side of the SOFC. The inner quartz tube consists of four ports and one of the ports extends spirally inside the tube to provide the gas stream to the anode material. The purpose of the windings for the gas inlet is to provide more residence time for the gas mixture to reach 850°C. Of the other ports, two are used

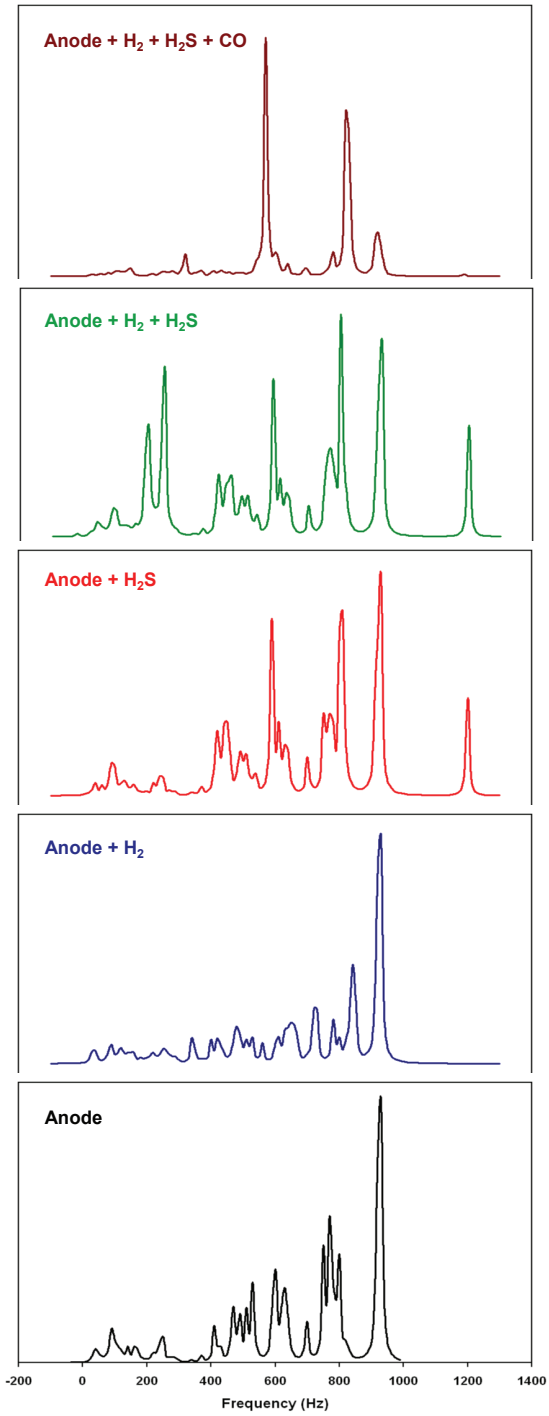

FIGURE 1. Raman Spectra for H_2, H_2S and CO Gas Components with Ni-YSZ Anode

for electrical contact wires from the anode and one for a gas outlet.

The solid oxide fuel cell was fabricated as an electrolyte supported cell. The electrolyte for the cell is YSZ with a thickness of 270 µm and 30 mm in diameter

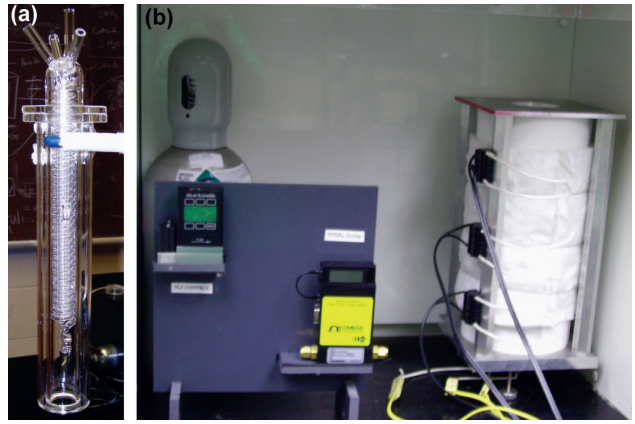

FIGURE 2. SOFC Testing System: (a) Quartz Tube Assembly, (b) Furnace in Fume Hood

(Nextech Materials, Inc.). This kind of cell is known as a button cell. It is planned to have three electrodes on the YSZ electrolyte, the anode is Ni-YSZ, and the cathode and reference will be Pt. Dimensions for these electrodes are 10 mm in diameter for both the anode and cathode, but the diameter for the reference electrode will be 3 mm. Thickness for all the electrodes will be 50 µm. The anode is designed to face the inside of the inner quartz tube and the cathode as well as the reference electrode will be on the other side. We want to study the behavior of the anode when exposed to gas mixtures; we only have the reference electrode to measure anode potential during the experiment. Electrodes are screen printed and sintered using Ohio Coal Research Center (OCRC) facilities.

Once the button cells are ready to be tested, they will be placed inside the quartz tube. The quartz tube assembly will be mounted on a three zone furnaces; three individual furnaces are mounted over each other to maintain a uniform temperature profile. The furnace stand, temperature controllers, flow controllers and gas cylinders are displayed in the schematic diagram (Figure 3). During experiments gas mixtures of either pure H_2 or gas mixtures of H_2 and H_2S will be passed through the inner quartz tube for the anode side, were as in the cathode side air will be supplied from the bottom of the furnace. The concentration of H_2S in the gas mixture will be 1, 10 and 100 ppm, which will be supplied to the Ni-YSZ anode for a period of 6 hours exposure. Electrochemical data collected during the experiment will include cell voltage, anode potential as well as impedance spectroscopy. We are planning to analyze the anode surface with scanning electron microscopy (SEM), energy dispersive X-ray spectroscopy (EDX), Fourier transform infrared spectroscopy (FT-IR) and Raman spectroscopy for surface morphology and chemical identification on the surface.

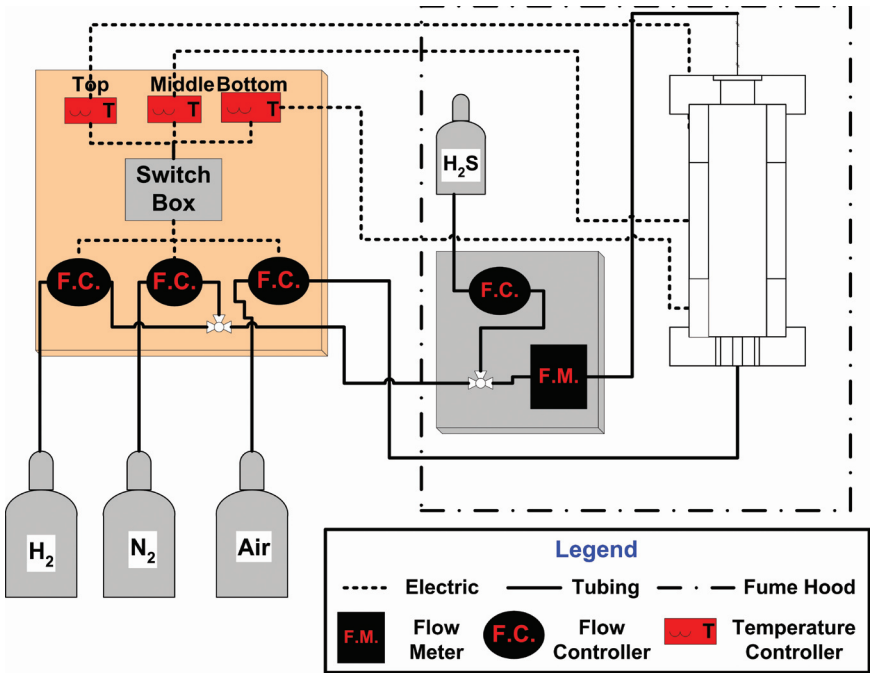

FIGURE 3. Schematic Diagram for SOFC Testing Station

Conclusions and Future Directions

- Oxidation of pure H_2 is more favorable than pure H_2S and CO on a Ni-YSZ surface is proven by quantum chemistry calculations.
- With the addition of the H_2O molecule to a CO gas mixture, the binding energy of pure CO increases from -26.9 to -76.6 kcal/mol, which helps CO oxidation on the Ni-YSZ surface.
- Quantum chemistry calculation predicts both infrared and Raman spectra for all the systems, which provides useful information to compare with experimental results.
- In the future, we want to perform SOFC testing with various gas compositions and characterize the anode material with analytical and electrochemical tools.
- Extend the modeling study to other anode materials (ceria-based) and different fuel sources such as natural gas and jet fuel.

Special Recognitions & Awards/Patents Issued

1. Third Prize (Poster) at Eastern Regional Chemical and Materials Engineering Graduate Symposium, October 2006, Lexington, KY.

2. First Prize (Poster) in Chemical and Biomolecular Engineering Session at 6th Annual Student Research and Creative Activity Fair, May 2007, Ohio University, Athens, OH.

FY 2007 Publications/Presentations

1. Daramola, D., Muthuvel, M., Marquez, A., and Botte, G. G., *Theoretical Investigation of Solid Oxide Fuel Cell Anode Materials in the presence of H_2, H_2S and CO*, Eastern Regional Chemical and Materials Engineering Graduate Symposium, October 2006, Lexington, KY.

2. Daramola, D., Muthuvel, M., Marquez, A., and Botte, G. G., *Theoretical Study of Solid Oxide Fuel Cell Anodes in the Presence of H_2S*, General Student Poster Session, 211th Electrochemical Society (ECS) Meeting, May 6 – 10, 2007, Chicago, IL.

References

1. G. Y. Lai, *High Temperature Corrosion of Engineering Alloys*, ASM International, Materials Park, OH (1990) p. 117.

2. A. Marquez, Y. De Abreu, and G. G. Botte, Theoretical Investigation of NiYSZ in the Presence of H_2S, *Electrochemical and Solid-State Letters*, 9 **(3)** A163-A166 (2006).

3. M. Muthuvel, A. Marquez, and G. G. Botte, Combined Theoretical and Experimental Investigation and Design of H_2S Tolerant Anode for Solid Oxide Fuel Cells, *FY 2006 Fuel Cell Annual Report*, DOE Office of Fossil Energy Fuel Cell Program, July 2006.