III.5 Solid State Energy Conversion Alliance (SECA) Solid Oxide Fuel Cell Program

Matthew Alinger
GE Global Research
1 Research Circle, MB277
Niskayuna, NY 12309
Phone: (518) 387-5124; Fax: (518) 387-5576
E-mail: alinger@research.ge.com

DOE Project Manager: Travis Shultz
Phone: (304) 285-1370
E-mail: Travis.Shultz@netl.doe.gov

Subcontractors:
- Pacific Northwest National Laboratory, Richland, WA
- University of South Carolina, Columbia, SC

Objectives

- Develop and optimize the design of a >100 MWe integrated gasification fuel cell (IGFC) power plant.
- Resolve identified barrier issues concerning the long-term economic performance of solid oxide fuel cells (SOFCs).

Accomplishments

- Evaluated competing design features for a hybridized coal gas SOFC stack including internal vs. external manifolding.
- Demonstrated fabrication of SOFCs of 45 cm in diameter (~1,600 cm^2 in area).
- Evaluated two cell manufacturing techniques, sintering and air plasma spray, for impact on cell performance and manufacturing cost.
- Determined, through the manufacturing down-select study, that the economic feasibility of SOFCs is primarily dependent upon improving long-term stability of cell performance rather than choice of manufacturing process.
- Verified moisture-assisted vapor phase transport of Cr-species to the cathode is dominant over bulk/surface diffusion.
- Demonstrated effectiveness of Co,Mn spinel coated interconnect with lanthanum strontium manganate (LSM) cathodes at reducing degradation rates from ~100 to ~25 $m\Omega\text{-}cm^2$/1,000 h.
- Demonstrated Co,Mn spinel coated interconnect with lanthanum strontium cobalt ferrite (LSCF) cathodes is effective at reducing degradation rates.
- Validated effectiveness of Co,Mn spinel interconnect coating at impeding Cr bulk diffusion.
- Identified 'free' silicon in interconnect alloy as likely contributor to high performance degradation.

Introduction

SOFCs represent an important opportunity to utilize fossil fuels in an efficient and environmentally friendly manner. Simple cycle fuel cells have obtained efficiencies to AC power as high as 45-50% with NOx production less than 0.5 ppm. Power producing systems containing fuel cells in combination with other power producing components such gas turbines, known as combined-cycle or hybrid systems, have the potential for even higher efficiencies in converting fossil fuels to AC electricity. SOFC/gas turbine hybrid systems utilizing coal synthesis gas (from a gasifier) as a fuel will provide environmentally friendly, inexpensive and dependable central power from an abundant fuel source (coal) and will make an important contribution to improving U.S. energy security.

This project aims at developing a highly efficient, environmentally benign, and cost-effective multi-MW SOFC-based power system operating on coal. The project will be a critical step towards the overall goal of realizing large (>100 MW) fuel cell power systems that will produce electrical power at greater than 50% overall efficiency from coal higher heating value (HHV) to AC power, including CO_2 separation preparatory to sequestration. The overall approach for this project is to integrate the SOFC with a gas turbine (GT) in a SOFC/GT hybrid power island, providing system efficiency greater than that achievable by either a simple cycle SOFC IGFC or an integrated gasification combined cycle (IGCC). Currently, commercial success of SOFC technology lies in minimizing the overall cost and dramatically reducing performance degradation over time.

Approach

The project focuses on designing and cost estimating the IGFC system and resolving technical and economic barrier issues relating to SOFCs. In doing so, manufacturing options for SOFC cells are evaluated, options for constructing stacks based upon various cell configurations are identified, and key

performance characteristics are identified. Key factors affecting SOFC performance degradation for cells in contact with metallic interconnects will be studied and a fundamental understanding of associated mechanisms will be developed. Experiments and modeling will be carried out to identify key processes/steps affecting cell performance degradation under SOFC operating conditions. Interfacial microstructural and elemental changes will be characterized, and their relationships to observed degradation will be identified. Mitigation strategies, including innovative coatings and bond layers, will be developed, evaluated and down-selected to improve degradation rates. Focus will be on microstructural stabilization and minimization of the area specific resistance (ASR) contribution from Cr_2O_3 scale growth and other interactions at electrode/interconnect interfaces evaluated during electrochemical testing and advanced microstructural characterization. Novel long-term and accelerated testing techniques will be developed and conducted under standard operating conditions to demonstrate capability to meet targeted performance degradation rates (<0.2%/1,000 h).

Results

Manufacturing options for SOFC cells have been evaluated, and options for constructing stacks based upon various cell configurations identified and key performance characteristics have been established. These evaluations were based on a detailed cost model. Ultimately, the key challenge of meeting the long-term cost requirement is heavily driven by the materials content of the cells, hence the need to focus on planar cells with "simple" materials. This project has evaluated two cell manufacturing techniques, sintering and air plasma spray, for impact on cell performance and manufacturing cost. Both manufacturing approaches present risks of achieving a technical level compatible with business and commercial goals. In both cases, if the success of the technical project is assumed, no significant differentiation can be identified from a "should-cost" perspective under high volume assumptions (>500 MW/year). Air plasma spray appeared to have some cost advantages at smaller production volumes given its inherent scaling advantage. However, the major risks related to SOFC technology development are not related to cell fabrication but in the capability of the technology to meet degradation and performance metrics compatible with the cost targets. It was determined, through the manufacturing down-select study, that the economic feasibility of SOFCs are primarily dependent upon improving long-term stability of cell performance rather than choice of manufacturing process. Therefore, key factors affecting performance degradation for SOFCs using ferritic stainless steel interconnects are currently being studied and a fundamental understanding of the associated mechanisms is evolving.

To this end, performance stability, in the presence of chromia, has been characterized with electrolyte-supported cells using sintered 8YSZ (yttrium-stabilized zirconia) electrolyte with symmetrically positioned electrodes comprised of LSM/YSZ and gold mesh current collectors as shown schematically in Figure 1. In this figure, the distance of the chromium source from the electrolyte can be varied (0-100 mm). The tests were performed at 800°C, in air at open cell voltage (OCV) and 0.1 A/cm^2 conditions. No effect on degradation rate was observed from either the current density or humidification investigated in absence of the ferritic steel. With the introduction of the chromium source, the resulting cell ASR is shown in Figure 2. The events labeled in the figure are 1) Cr-source brought into contact with the cathode; 2) humid air started; 3) dry air started; 4) humid air started; 5) cell left at OCV;

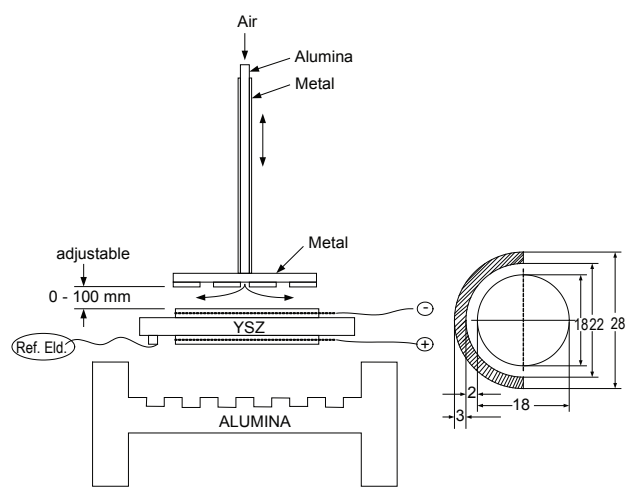

FIGURE 1. Schematic of the Experimental Setup and the Cell to Study Cr-Contamination of SOFC Cathodes; Dimensions Are in Millimeters

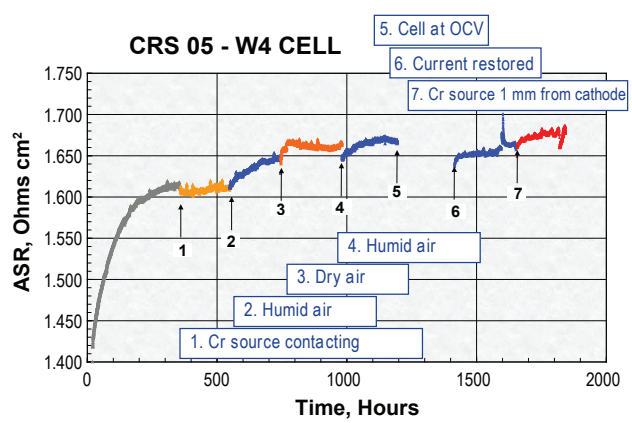

FIGURE 2. Total ASR of Electrolyte-Supported Cell with LSM/YSZ Electrodes as a Function of Time at 800°C in the Presence of a Ferritic Steel at 0.1 A/cm^2 and OCV in Dry and Humid Air Conditions

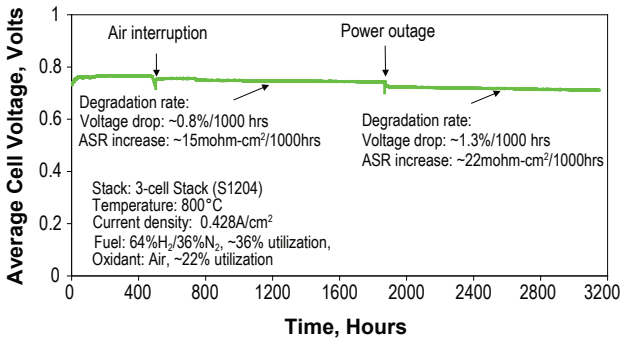

FIGURE 3. Average Cell Performance of 3-Cell Stack with the Protective Coating

6) current turned back on; and 7) Cr-source lift up to ~1 mm away from the cathode. The continued degradation when the Cr source was not in direct contact with the cathode indicated a gas transport and interaction mechanism in the presence of water vapor. Cr poisoning to the cathode was accelerated with moisture in air. Thus, these results support the claim that moisture-assisted vapor phase transport of Cr-species to cathode is dominant over bulk/surface diffusion. From these results, it is evident that Cr volatilization must be prevented to maintain high performance SOFCs, a fundamental goal of multi-MW SOFC power plants.

In order to mitigate the detrimental effects of chromium poisoning, protective coatings can be applied to the ferritic steel interconnects. This work uses Co,Mn spinel coatings. Shown in Figure 3 is the average performance of a 3-cell stack having the protective coating on the cathode interconnect surface. All three cells performed close to each other; the degradation rate was in the range of 11-16 mohm-cm^2/1,000 hours with average being ~15 mohm-cm^2/1,000 hours before a power outage. Even after the power outage, the stack maintained very good performance with an average degradation rate of ~22 mohm-cm^2/1,000 hours. In comparison, the typical degradation rate for LSM-based cells without coating was about 100 mohm-cm^2/1,000 hours.

The formation of thin, electrically insulating phases on the SOFC interconnect can contribute to significant cell performance degradation. Detailed characterization studies of the chromia/steel interface, after long-term electrochemical testing, reveals appreciable (100 nm thick) amorphous silica scale formation between the E-BRITE® interconnect and the chromia scale. Evidence of this is shown in the transmission electron microscope (TEM) micrograph shown in Figure 4. This continuous, electrically insulating silica scale is formed as a result of silicon impurities present in the alloy. Experiments are currently underway to understand the specific degradation impact of this layer.

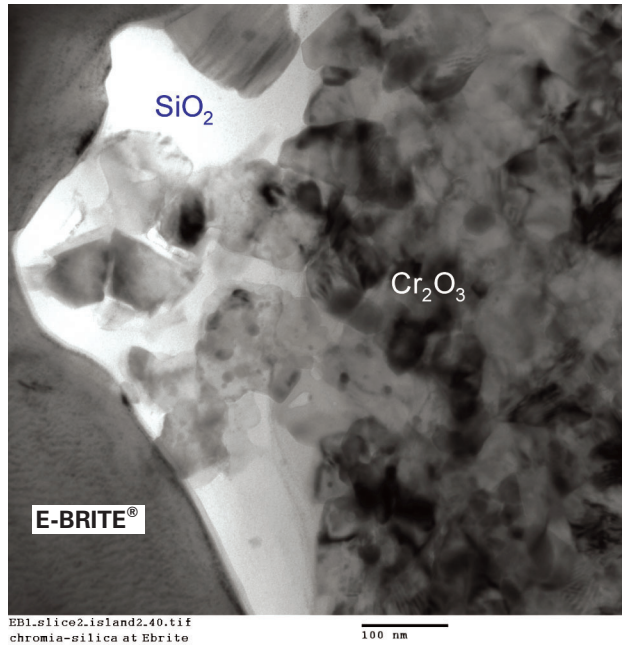

FIGURE 4. TEM Micrograph of Amorphous Layer of Silica at Interconnect/Chromia Interface

Conclusions and Future Directions

As a result of the findings from the manufacturing down-select, project scope is focused on mitigating performance degradation without increasing the cost.

To study and address the issues of performance degradation, a small-scale ceramic test vehicle will be developed to be used for evaluation of performance and degradation entitlement for gold and steel interconnects under high fuel utilization conditions. The data collected from this test, along with additional testing, will be used to construct a Pareto of cathode-side degradation mechanism impact to determine the dominant mechanism(s). This information will be used in the evaluation of the ASR stack-up from data collected through contact resistance testing and ceramic test vehicle data on the baseline materials set. Ultimately, a degradation mitigation solution for high performance SOFCs with ferritic steel interconnects, having a performance degradation of less than 25 mΩ-cm^2/1,000 hours (i.e. chromia growth dominated), will be demonstrated.

FY 2007 Publications/Presentations

1. M. Alinger, J. Guan, S. Zecevic, R. Klug, S. Taylor, S. Gaunt and P. Lam, "Performance degradation of SOFCs with metallic interconnects", Presentation at SOFC X, Nara, JP, 2007.

2. J. Guan, S. Zecevic, Y. Liu, P. Lam, R. Klug, M. Alinger S. Taylor, B. Ramamurthi, R. Sarrafi-Nour and S. Renou,

"Performance degradation of SOFCs with metallic interconnects", ECS Transactions, V7N1, pp. 405-412, 2007.

3. T. Striker, J.A. Ruud, W.J. Heward, Y. Gao and C. Steinbruchel, "A-site deficiency and phase purity of lanthanum strontium ferrite powders", ECS Transactions, V7N1, pp. 1207-1216, 2007.