IV.E.2 Advanced Control Modules for Hybrid Fuel Cell/Gas Turbine Power Plants

Hossein Ghezel-Ayagh (Primary Contact) and S. Tobias Junker
FuelCell Energy, Inc.
3 Great Pasture Road
Danbury, CT 06813
Phone: (203) 825-6048; Fax: (203) 825-6273
E-mail: hghezel@fce.com

DOE Project Manager: Travis Shultz
Phone: (304) 285-1370
E-mail: Travis.Shultz@netl.doe.gov

Subcontractors:
- National Fuel Cell Research Center (NFCRC), Irvine, CA
- Carnegie Mellon University (CMU), Pittsburgh, PA
- Pennsylvania State University (PSU), State College, PA

Objectives

The overall project goal is to develop advanced and intelligent control algorithms for hybrid fuel cell/gas turbine (FC/T) power plants. The specific objectives are:

- Establish a dynamic modeling environment to facilitate simulation studies, as well as development and testing of control algorithms.
- Increase reliability and availability to extend service life of the components in the hybrid FC/T power plant.
- Develop robust controllers that maintain stable operation and high performance in the presence of disturbances.
- Develop optimal control strategies to improve performance and to accommodate fast response during rapid transients.
- Accommodate measurement errors, as well as sensor and actuator faults to reduce the number of unplanned shutdowns.
- Integrate robust and optimal controllers into an overall supervisory framework.

Accomplishments

- Completed development of modular dynamic models for internally reforming carbonate fuel cells (Direct FuelCell®, DFC®) and solid oxide fuel cells (SOFCs) as well as balance-of-plant equipment including a micro-turbine generator. The models were based on the MATLAB®/Simulink® programming environment.
- Completed integration of sub-MW hybrid DFC®/T and SOFC/T simulation programs.
- Developed control strategies for fuel cell stack temperature, gas turbine operation, and fuel feed rate during start-up and power ramps.
- Completed input/output pairing ensuring stable plant operation and minimal interactions among control loops.
- Designed and validated decentralized multi-loop feedforward-feedback control structure.
- Completed off-line optimization studies for eighteen ramp and step load profiles while maximizing efficiency.
- Developed an inferential control strategy for adjusting fuel flow rate via estimation of disturbances in fuel composition.
- Developed a centralized linear quadratic regulator including state estimation via Kalman filtering that led to improved control of stack temperature and cell voltage.
- Developed and trained a neural network suitable for online control supervision based on the results from the control optimization studies.
- Improved prediction accuracy of the fundamental model by augmenting it with a neural network.

Introduction

The control system for FC/T hybrid power plants plays an important role in achieving synergistic operation of subsystems, improving reliability of operation, and reducing frequency of maintenance and downtime. The control strategy plays a significant role in system stability and performance as well as ensuring the protection of equipment for maximum plant life. Figure 1 shows a simplified process diagram of an

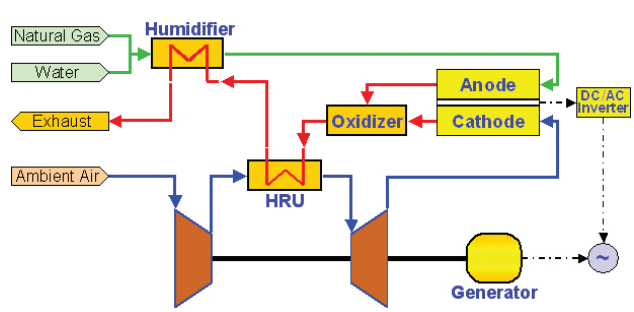

FIGURE 1. Conceptual Process Flow Diagram for SOFC/T System

internally reforming SOFC/T system, which is being studied for development of advanced control algorithms. The system is based on an indirectly heated Brayton cycle. The anode exhaust, which contains unreacted fuel, is mixed with the cathode exhaust in a catalytic oxidizer, where oxidation of fuel is completed. The oxidizer exhaust passes through a heat recovery unit in which it preheats the compressed air before entering the turbine. The hot compressed air is expanded through the turbine section, driving an electric generator.

Dynamic simulation has proven to be a powerful design tool to study the transient behavior of fuel cell/gas turbine hybrid systems. Development of an advanced control strategy is facilitated by using a dynamic model both as a simulation test bed and as part of the controller itself. Components of the advanced control module include a neural network supervisor, robust feedback controllers, and predictive system models. These advanced control components are used in the development and demonstration of an innovative algorithm that optimally and robustly controls hybrid power systems. The algorithm can easily be adapted to the type of fuel used, whether natural gas, coal gas, or digester gas.

Approach

The advanced control module shown in Figure 2 is based on a feedforward/feedback structure. It consists of a combined robust controller and a neural network supervisor that together manipulate the actuators to optimally control the hybrid system during load ramps. The feedforward controller will provide optimal dynamic scheduling based on the prescribed load profile and trends. Because the optimization routines are computationally too intensive for real-time application, they are carried out off-line. The resulting data is then used to train a neural network supervisor. The feedforward controller performance depends strongly on the accuracy of the model employed to tune it. A feedback control strategy is utilized to compensate for setpoint deviations caused by imperfect feedforward control moves and to counteract process disturbances such as variations in fuel composition and ambient temperature. The feedback controller will be designed to be robust to modeling errors and process disturbances.

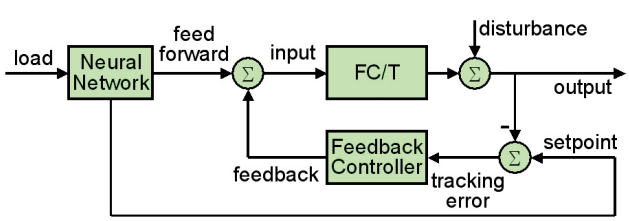

FIGURE 2. Advanced Control Module Comprising Neural Network Supervisor and Robust Feedback Controller

Results

A nonlinear dynamic model was developed and linearized. Optimal input/output pairing was determined via analysis of the relative gain array (RGA). A decentralized control structure comprising proportional and proportional-plus-integral control as well as feed-forward control and cascade control was developed and performance was confirmed. RGA analysis indicated that independent control loops of the hybrid system are coupled at time scales greater than one second.

To improve control performance, a centralized linear quadratic regulator (LQR) including state estimation via Kalman filtering (KF) was developed [1]. The controller was augmented by local turbine speed control and integral system power control. This control structure offers improved control of fuel cell temperature and improved rejection of variations in fuel composition when compared to the decentralized controller (Figure 3). However, the decentralized controller achieved better control of the oxidizer temperature. Because rejection of fuel variations and maintenance of cell temperature are more important than tight control of the oxidizer temperature the new controller is an improvement over the current state of the art.

A neural network (NN) supervisor was developed that mimics the function of the nonlinear dynamic optimization function block in generating setpoint profiles and feedforward (FF) control inputs. To avoid the high computational cost, the dynamic optimization could be replaced with a NN for fast on-line computations. Based on structural considerations, a diagonal recurrent neural network structure [2] was

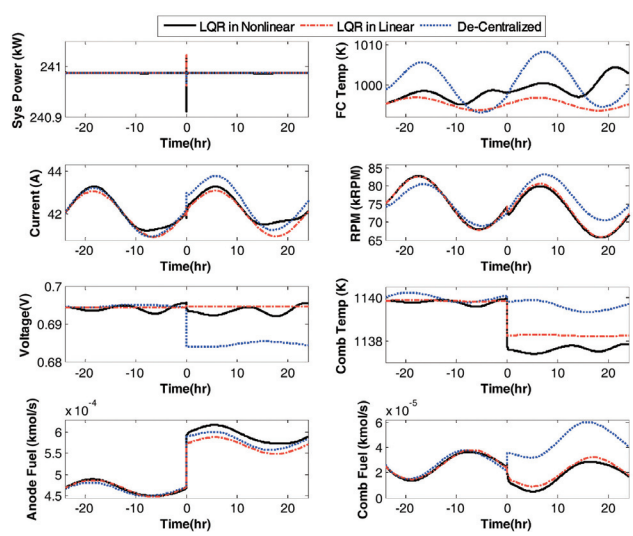

FIGURE 3. Performance Comparison of Centralized LQR Controller (using Linear and Nonlinear Models) with Previously Developed Decentralized Controller

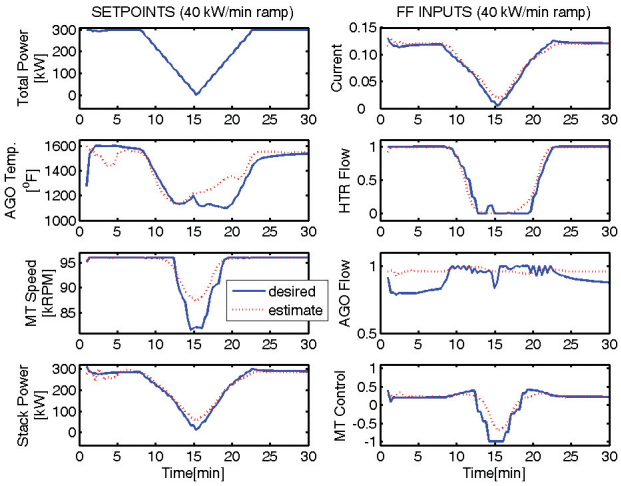

FIGURE 4. Neural Network Performance Evaluation for a 40 kW/min Power Ramp

developed for prediction of the optimal setpoint and FF inputs.

It was observed that dividing the supervisor into two separate NNs, one for setpoints, and one for FF inputs, resulted in better predictions. Several NN structures were tested to find an optimal structure for the available data. It was demonstrated, as shown in Figure 4, that the NN supervisor is suitable to generate outputs for an arbitrary load, even though the load was not used for the network training.

Conclusions and Future Directions

Summary and conclusions of results obtained this year include:

- Control of stack temperature and fuel cell voltage of the SOFC/T plant was improved via development of a centralized controller with state estimation.
- Compared to the previously developed decentralized controller, this controller takes all inputs/outputs and their interactions into account.
- Optimal control results were successfully modeled and predicted by means of a NN supervisor. This facilitates optimal feedforward control moves and setpoints under varying process conditions.
- Prediction of the original neural network supervisor was further improved by training the neural network with dynamic data including feedback of delayed outputs.
- The fundamental dynamic model was improved via a neural network compensator. This hybrid fundamental/NN model achieves better prediction of experimental data than is possible via the fundamental model by itself.

Overview of future work includes:

- Develop fuzzy logic fault detection and fault accommodation techniques.
- Integrate the developed control strategies into the simulation environment for extensive testing of the algorithms for their stability and robustness.

FY 2007 Publications/Presentations

1. R. Roberts, J. Brouwer, F. Jabbari, T. Junker, and H. Ghezel-Ayagh. *Control design of an atmospheric solid oxide fuel cell/gas turbine hybrid system: Variable versus fixed speed gas turbine operation*, Journal of Power Sources 161(1), pp. 484–491, October 2006.

2. F. Mueller, F. Jabbari, J. Brouwer, S. T. Junker, and H. Ghezel-Ayagh. *Linear Quadratic Regulator for a Bottoming Solid Oxide Fuel Cell Gas Turbine Hybrid System*, Proceedings of the 7th International Colloquium on Environmentally Preferred Advanced power Generation (ICEPAG), Newport Beach, CA, Paper No. ICEPAG2006-24018, September 5–8, 2006.

3. S. Kameswaran, L. T. Biegler, S. T. Junker, and H. Ghezel-Ayagh. *Optimal off-line trajectory planning of hybrid fuel cell/gas turbine power plants*, AIChE Journal, 53(2), 460–474 (2007).

4. F. Mueller, F. Jabbari, J. Brouwer, R. Roberts, S. T. Junker, and H. Ghezel-Ayagh. *Control Design for a Bottoming Solid Oxide Fuel Cell Gas Turbine Hybrid System,* Accepted for Publication in the Journal of Fuel Cell Science and Technology, scheduled for May 2007.

5. T.-I. Choi, K. Y. Lee, S. T. Junker, and H. Ghezel-Ayagh. *Neural Network Supervisor for Hybrid Fuel Cell/Gas Turbine Power Plants*, IEEE Power Engineering Society (PES) General Meeting, Tampa, FL, June 24–28, 2007.

References

1. S. Skogestad and I. Postlethwaite, *Multivariable Feedback Control – Analysis and Design*, John Wiley & Sons, New York, 1996.

2. C. C. Ku and K. Y. Lee, *Diagonal Recurrent Neural Network for Dynamic Systems Control*, IEEE Transactions on Neural Networks, 6:144-156, January 1995.