PRINCIPLES OF FLUE GAS WATER RECOVERY SYSTEM

John H. Copen
- SIEMENS Power Generation, Inc.

Terrence B. Sullivan
- SIEMENS Power Generation, Inc.

Bruce C. Folkedahl
- Energy & Environmental Research Center

Greg F. Weber
- Energy & Environmental Research Center

Barbara Carney
- National Energy Technology Laboratory

POWER-GEN International 2005 – Las Vegas, Nevada
December 6–8th

SIEMENS

ABSTRACT

This paper discusses a commercially viable and novel technology that enables the recovery of the water vapor contained in power plant flue gas streams.

Currently, fossil fuel-based power plants consume vast quantities of water for heat rejection, fuel preparation, power augmentation, emissions control, and cycle makeup purposes. At the same time, global water resources are becoming more difficult to procure as water consumption outstrips the pace of renewal. At present, the strategy used to reduce power plant water consumption in areas where water restrictions are stringent is to employ an air-cooled condenser as opposed to once-through cooling or a cooling tower. However, even plants with air-cooled condensers to minimize water consumption require a significant amount of water in several cases in order to allow for required steam drum blowdown, power augmentation systems, and gas turbine inlet evaporative cooling or fogging systems in addition to the aforementioned uses. To offset these observed escalating consumption rates, a new system was devised that can recover a substantial portion of the water vapor present in a flue gas stream. The water recovered by this system is of a quality similar to that of a reverse osmosis system outlet (RO Out). This water can be used for various plant needs as recovered or can receive minimal treatment so that it can be used as direct-cycle makeup.

Siemens Power Generation, Inc. (SPG) and the Energy & Environmental Research Center (EERC) at the University of North Dakota have successfully completed the first phase of a U.S. Department of Energy supported pilot-scale program that verified the technical viability of this system. SPG, with the cooperation of the EERC, is currently developing a commercial partnership with the goal of having a 1/10-scale slipstream commercial demonstration by the end of 2007.

This paper provides a detailed description of the pilot-scale system and process conditions, presents the reportable results of the recent pilot-scale test program, and discusses the expected commercial characteristics.

INTRODUCTION AND BACKGROUND

The electricity industry is second only to agriculture as the largest domestic user of water, accounting for 39% of all freshwater withdrawals in the nation, of which 71% is used in fossil fuel-based electricity generation. Power plants have to compete with other industrial customers, agricultural interests, and households for this limited commodity. The availability of water for use in electric power generation is limited in many parts of the United States and is an important factor in obtaining site permits for new plant construction. Difficulty or the inability to obtain necessary water permits can lead to delayed or abandoned projects. Also, it is often the case that additional infrastructure is required to provide a suitable supply, adding cost and environmental impact. In areas that do not have an adequate water source, power plant construction is not even considered, even though these locations are ideal in other respects.

The goals of this flue gas water recovery project are to develop technology for recovering water from combustion flue gases to reduce the net water requirements

of power plants burning fossil fuels and to perform an engineering evaluation to determine how such technology can be integrated into various power-generating systems, including steam turbine and combined-cycle plants. Power plants burning fossil fuels have in the past been designed to generate electricity at least cost under circumstances of abundant coal and natural gas resources and adequate supplies of water for plant cooling. Future plants will increasingly need to be designed and operated to conserve both fuel and water. Water is becoming scarce and expensive in many parts of the United States including California, where there is already a strong economic incentive to reduce the net cooling water requirements of power plant subsystems cooling steam turbine condensers and scrubbing stack gases.

Currently, coal-fired power plants require access to water sources outside the power plant for several aspects of their operation in addition to steam cycle condensation and process cooling needs. In integrated gasification combined-cycle (IGCC) systems, significant water is used in the coal gasification process and for syngas saturation, which is lost through the power plant stack. In pulverized-coal (pc) power plants, water inherent in the coal as well as water associated with flue gas scrubbing is lost through the stack. Currently, the strategy used to reduce water consumption in areas where water restrictions are stringent is to employ an air-cooled condenser as opposed to once-through cooling or a cooling tower. However, even plants with air-cooled condensers to minimize water consumption require a significant amount of water in several cases in order to allow for required steam drum blowdown, power augmentation systems, and gas turbine inlet evaporative cooling or fogging systems. At the present time, there is no practical method of extracting the usually abundant water found in the power plant stack gas. Some work has been done on using mechanical heat rejection to condense water vapor. Such systems would require massive and expensive heat rejection equipment, would be severely limited by high ambient temperatures, and would result in decreased gas turbine performance as a result of higher back pressure due to closed heat exchangers in the flow path. The process being investigated in this project uses liquid desiccant-based dehumidification technology to efficiently extract water from the power plant flue gas, requires minimal heat rejection equipment, can function across the entire ambient range, and results in only a small increase in exhaust pressure.

The advantage of using a liquid desiccant dehumidification system (LDDS) is to facilitate the recovery of useful amounts of water at flue gas temperatures that can be reasonably achieved during power plant operation. Direct-contact cooling with a desiccant solution can be engineered to minimize pressure drop, and any water evaporating into the flue gas from an upstream scrubber would be recovered for reuse. The alternative of indirect cooling in an air/flue gas-condensing heat exchanger without a desiccant, which would be limited to applications involving low ambient temperatures, raises significant engineering and economic problems involved with the size and cost of the heat exchange equipment, exhaust pressure drop, corrosion, fouling, and discharge of non-buoyant stack gas.

This project is a two year program to demonstrate the feasibility and merits of a liquid desiccant-based process that will efficiently and economically remove water vapor from the flue gas of coal-fired power plants (IGCC and PC steam plants) to be recycled for in-plant use or exported for clean water conservation. Reduction of water consumption by power plants is quickly becoming a significant issue when

attempting to obtain permits for power plants and when required to meet new, more restrictive water consumption allowances currently being considered by the U.S. Environmental Protection Agency (EPA) under proposed Rule 316b.

EXPERIMENTAL

The project is divided into ten tasks as follows:

- Task 1 – Desiccant Selection
- Task 2 – Desiccant Laboratory Test Evaluation
- Task 3 – Test Plan Development
- Task 4 – Test Facility and Equipment Design
- Task 5 – Equipment and Materials Procurement
- Task 6 – Test Equipment Installation
- Task 7 – Testing
- Task 8 – Test Data Evaluation
- Task 9 – Commercial Power Plant Evaluation
- Task 10 – Program Management

The initial portion of the project involved an investigation of the potential viability of various desiccants to meet program requirements. The selection of a desiccant for the proposed system was predicated on several criteria. These criteria were identified, applicable chemical/physical/environmental/cost data were gathered, and the data compared. A weighted ranking system based on a criteria list was developed for use in the evaluation and comparison of the candidate desiccants. From the numerous desiccants considered, three candidate desiccants were chosen for bench-scale testing as part of Task 2. Based, in part, on the results of this bench-scale testing, a final desiccant was selected to be used in the larger pilot-scale Water Extraction from Turbine Exhaust (WETEX) demonstration using the Energy & Environmental Research Center's (EERC's) slagging furnace system (SFS) as a flue gas source. This combustion test furnace is described in detail elsewhere[1]. Two 1-week tests were performed under Task 7 during the pilot-scale evaluation of the WETEX process. The first test used natural gas as the combustion fuel, and combustion and exhaust conditions were set to simulate a natural gas-fired combined cycle plant having a moisture level in the flue gas of nominally 7% by volume. During Test Two, a Powder River Basin (PRB) coal was used as the combustion fuel, and combustion conditions were set to simulate a pc-fired power generation plant with a wet scrubber having a moisture level in the flue gas of nominally 14% by volume. To provide the required moisture level in the flue gas entering the WETEX process system during the coal-fired test, additional water was injected into the flue gas stream. In both tests, the flue gas exhaust from the furnace was fed to the WETEX pilot scale process system, which is illustrated in Figure 1 as a schematic of the general process layout.

Figure 1. Schematic of the General Process Layout

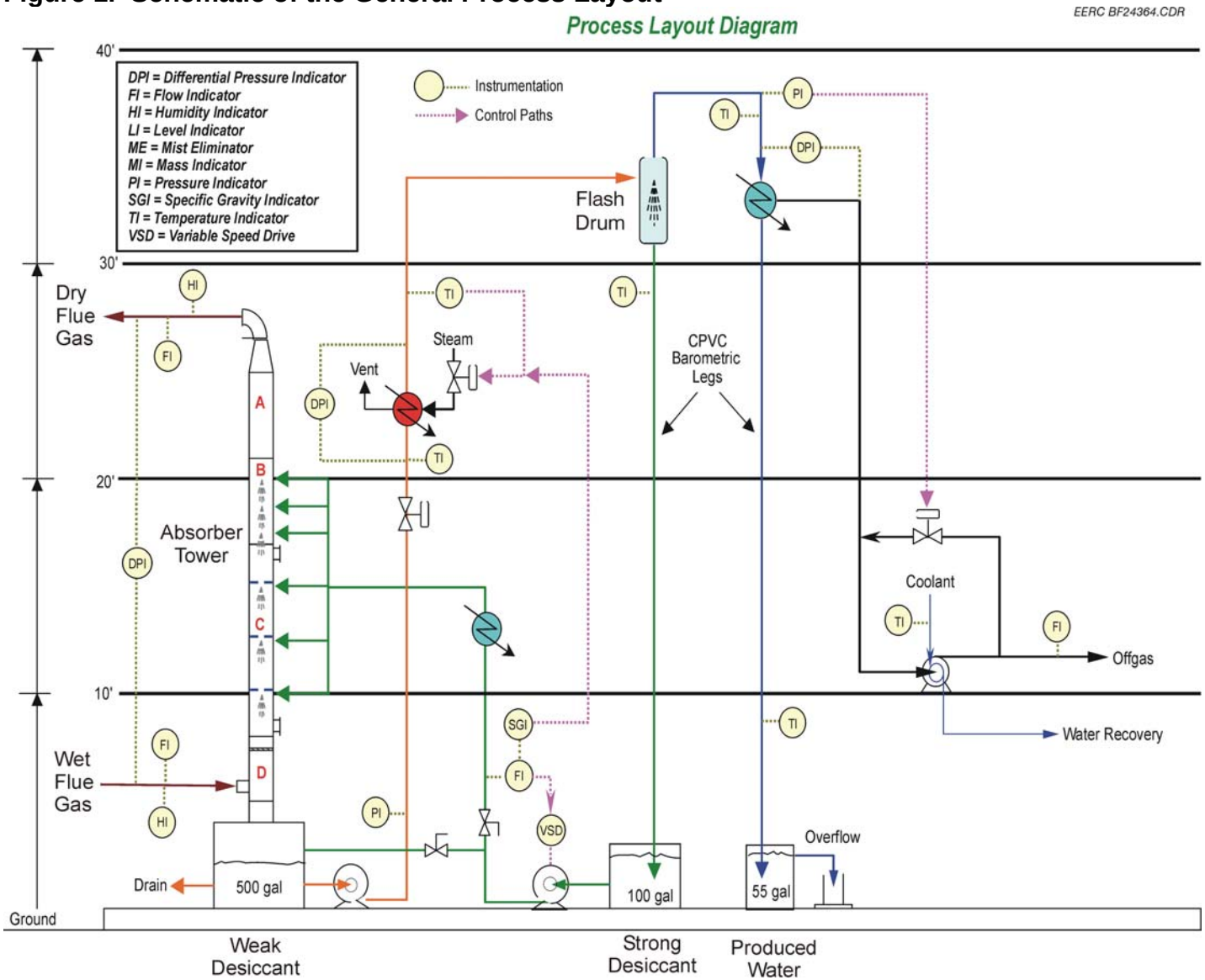

The absorber tower illustrated in the schematic (Figure 1) shows the location of the six spray levels that were used to inject the liquid desiccant in a countercurrent flow to contact the flue gas. In the test procedure, the number of spray levels used was varied to aid in determining effective liquid to gas (L/G) ratios. In addition, spray nozzles of different sizes producing different flow rates, spray patterns, and droplet sizes were also interchanged during the testing. While the majority of the testing consisted of a spray tower configuration, tests were also performed in a packed bed configuration which used one spray level just above a 3-foot bed of polypropylene saddle type packing. The packing was supported on a grate just above the flue gas inlet to the absorber tower. Flue gas flow through the tower was kept constant at 450 acfm to achieve a velocity of 10ft/s through the tower. There was a high-efficiency mist eliminator positioned at the top of the spray tower to control any entrained desiccant. The mist eliminator had water wash nozzles above and below it for online cleaning. The spray tower and the flash drum were constructed of 316 SS, but the desiccant piping to the absorber and to and from the flash drum were chlorinated polyvinyl chloride (CPVC) Schedule 80.

As stated, the flash drum was constructed of 316 SS and was operated at sub-atmospheric conditions to facilitate the evaporation or flashing of water from the desiccant solution. Weak desiccant solution (desiccant that has passed through the spray tower and has absorbed water diluting the desiccant concentration in solution) was introduced into the flash drum through a nozzle that sprayed the desiccant solution to flash the water off as a vapor. The water vapor was removed by creating a vacuum at the exit of the flash drum. This vacuum was maintained by a heat exchanger cooled by water that condenses the vapor to liquid. This condensed water was then collected as the produced water from the process. The strong desiccant solution was collected by passing through a barometric leg which imparted a liquid seal for the subatmospheric conditions in the flash drum and allowed the collection tank to be open to the atmosphere. Desiccant flow rates and temperatures were varied to the flash drum to aid in determining the effectiveness at different process conditions.

Two separate tanks were used in this process for desiccant collection. One tank was located at the base of the spray tower and collected the weak desiccant solution and the other tank was located at the base of the flash drum barometric leg and was used to collect the strong desiccant solution. The tanks were fabricated from copolymer polypropylene so as to withstand the corrosive nature of the desiccant solution. Both of the tanks were located within a secondary steel containment vessel as a precautionary measure against leaks and material failures. The tank at the base of the flash drum had a 100-gallon capacity, and the tank at the base of the absorber had a 500-gallon capacity. Tank levels were monitored by differential pressure transmitters. Piping between the tanks and the absorber and the flash drum was configured such that the desiccant solution could bypass the flash drum and absorber to allow for maintenance without necessitating a shut down of the entire process. A filtration system was connected to the larger 500-gallon tank which was used to filter out any particulate contaminants or precipitates that form in the desiccant solution during operation or when loading desiccant into the system. The filter bags used had size ratings of 5, 10, and 25 µm.

The system was designed with three heat exchangers with the following purposes:

- One to cool the strong desiccant prior to introduction into the absorber tower.
- One to heat the weak desiccant prior to introduction into the flash drum.
- One to condense the water vapor coming from the flash drum.

All of the heat exchangers were of a shell-and-tube design. The heat-transfer fluid for the cooling heat exchanger and the condenser was water while the heat-transfer fluid for the heat exchanger for heating of the desiccant was steam. A commercial process condenser theoretically should provide the vacuum necessary to flash the water from the weak desiccant solution. However, for this pilot-scale testing, a liquid ring pump was added downstream of the condenser to assist in maintaining the sub-atmospheric conditions in the flash drum and to remove any noncondensable gases from the flash drum and condenser.

During the test periods, O_2, SO_2, NO_x, CO, CO_2, and H_2O in the flue gas were continuously recorded. In addition, several EPA Method 5 sampling procedures were used to measure H_2O, particulate mass loading, and other species in the gas stream. Desiccant solution samples were collected and analyzed for specific gravity, pH, sulfates, and total suspended solids. Produced water samples were analyzed for pH, conductivity, alkalinity, total hardness, calcium, magnesium, iron, copper, zinc, sodium, potassium, chloride, sulfate, nitrate, orthophosphate, and silica.

PILOT-SCALE TEST RESULTS AND DISCUSSION

Several process conditions were tested during the pilot-scale testing. Flow rates, number of spray levels, desiccant temperatures, and process configurations were varied. In general, the system operated as expected or better than expected through all of the process conditions.

When firing natural gas to produce the flue gas for the WETEX system, sulfur in the gas was relatively low and not an issue with respect to an interaction with the desiccant or produced water. When firing coal, the sulfur levels were higher and needed consideration. When firing natural gas, the flue gas SO_2 values were nominally 15 ppmv, and during the coal tests the SO_2 values in the flue gas averaged 230 ppmv. The level of sulfur in the coal-fired tests caused the pH of the desiccant solution to become rather low and subsequently required a system modification that neutralized the pH of the desiccant solution somewhat during the testing. It is not expected that the sulfur removal from the flue gas will be detrimental to the overall operation of the process, but, in contrast, has the potential to be utilized as a polishing step to further reduce levels of sulfur emissions during coal combustion. During the combustion testing, no attempts were made to control the NO_x levels, which varied from 27 to 43 ppmv during the natural gas tests and 182 to 641 ppmv during the coal-fired test. The presence of NO_x at these levels appeared to have little effect or interaction with the desiccant solution. Analysis of the off-gas vapor stream of the product water condenser indicated that CO_2, CO, and SO_2 were not present. Average O_2 values of approximately 18% by volume and NO_x levels of nominally 110 ppmv were recorded. The NO_x levels in the off-gas stream were recorded at a time when the NO_x levels in the flue gas were over 600 ppmv with little discernable change between inlet of the absorber flue gas NO_x values and outlet of

the absorber flue gas NO_x values. Because of the subatmospheric pressure in this portion of the system, it is probable that this stream is dominated by air in-leakage, and the NO_x levels, which are on a volume basis and not reflective of flue gas levels, indicates a very small amount of flue gas dissolved in the solution and released in the flash drum.

Water removal from the flue gas ranged from 23% to 63% by volume, with the process conditions dictating the percentage of moisture removed. Higher percentages of moisture removal required higher energy inputs for heating and cooling. However, process conditions that required little or no external heating or cooling still removed a significant volume of water from the flue gas. Figure 2 illustrates the amount of moisture available in flue gas from different types of power plants firing different fuels. In the case of the 2X1 F Class natural gas fired gas turbine cycle, if the plant were to be configured with an air-cooled condenser (ACC) for low pressure steam turbine exhaust steam condensing, water usage for the plant would be approximately 250 gallons per minute (gpm), inclusive of all plant needs. When evaluated against the nominally available 375 gpm per turbine, or an available nominal total of 750 gpm for a 2X1 plant, using a WETEX system sized to remove approximately 33% of the available moisture would provide for all of a plant's water needs. This can be achieved without the need for any external heating or cooling introduced into the system. This is accomplished by utilizing the heat of absorption in the absorber tower to heat the solution prior to introduction into the flash tank and the cooling effect of evaporation in the flash tank to cool the solution prior to entering the absorber tower. The cold-finger or cooling-heat exchanger to create the vacuum and condense the produced water vapor would utilize an air cooled condensor possibly in conjunction with a ground source heat sink. This has the potential to make this a very economical system from an operating cost standpoint.

Figure 2. Typical Flue Gas Water Content

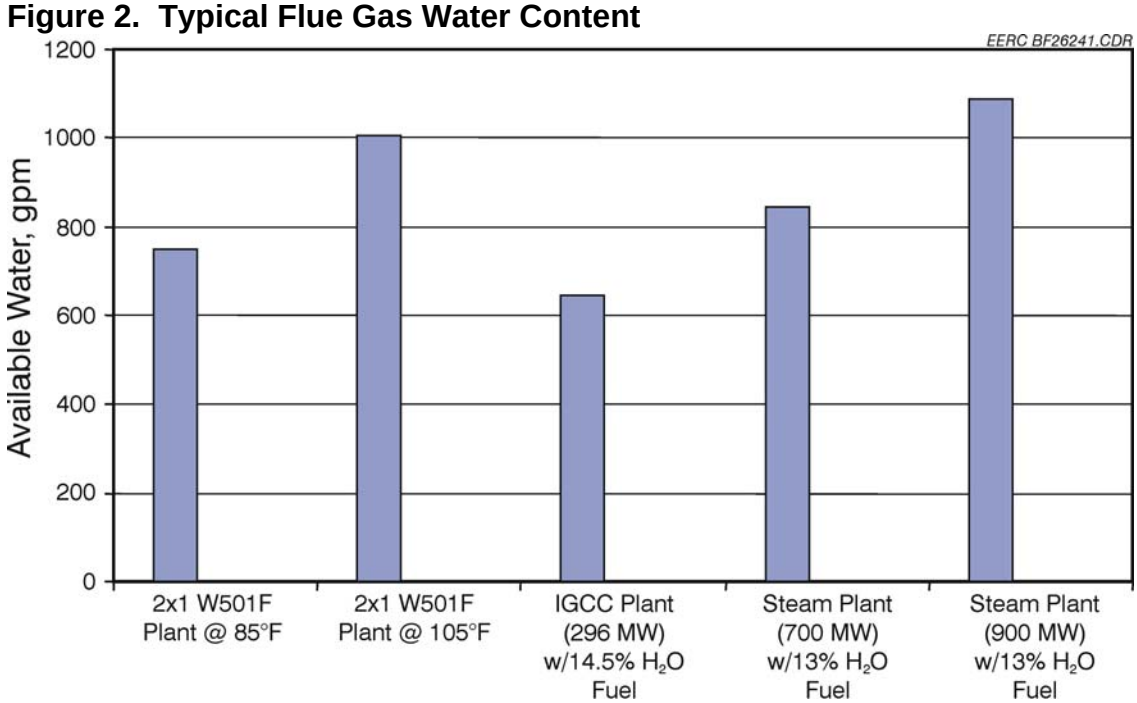

The quality of the water produced using the pilot-scale system is exceptional. Figure 3 illustrates the quality of the water produced during the pilot-scale testing as compared to water produced in a reverse osmosis (RO) system that is used to purify water in a boiler water makeup system in a power plant. With the exception of a slightly higher level of calcium as $CaCO_3$ value, the produced water from the LDDS in Test Series I is equal to or better than that of the water from RO in a typical power plant. Water from RO is generally near boiler makeup water-ready, with potentially a degasing step prior to introduction into the steam cycle.

Figure 3. Pilot-Scale Product Water Quality Compared to RO Outlet Water

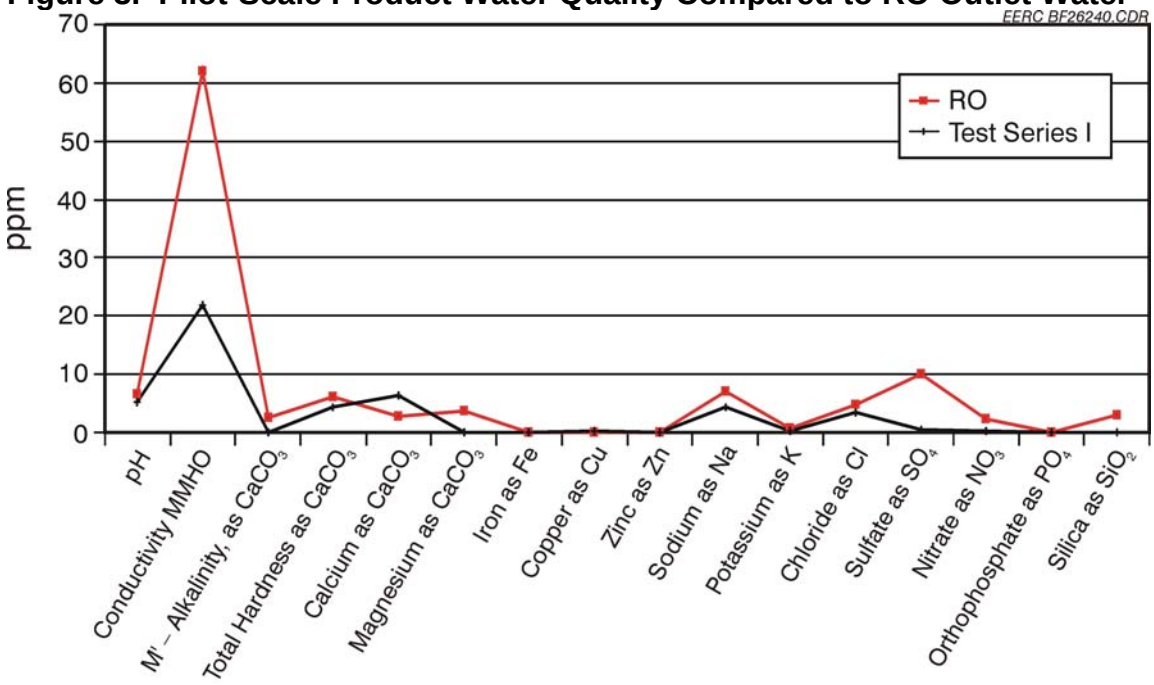

CONCLUSION

Data and results that were collected through the testing phases of this program have provided the initial values for a commercial power plant evaluation (Task 9). Though final material selection for a commercial application has not been determined, several candidate materials have been identified for consideration, ranging from corrosion resistant alloys through readily available polymers and plastics. Further planned testing by Siemens Power Generation, Inc. and the EERC is at present in progress with specific milestones established for collection of long term operability data and the subsequent finalized design of a 1/10 scale commercial demonstration unit. SPG, with the cooperation of the EERC, is also at present developing relationships with industrial partners that are interested in the continued development of this technology through supply of engineering services or the provision of a host demonstration site.

The current conceptual commercial application for this technology can be arranged in a slip stream configuration, external to the flue gas path, or in a full-flow configuration, placed directly in the flue gas path. In a natural gas-fired combined cycle, this system would interface just after the last heating surface of the heat

recovery steam generator. In a coal-fired plant, this system would interface downstream of a wet flue gas desulfurization (FGD) system, where it could remove the majority of the moisture introduced by the FGD process. Figures 4–6, show the process arrangement and the conceptual layout of a commercial slip stream WETEX system.

Figure 4. WETEX Commercial Process Arrangement

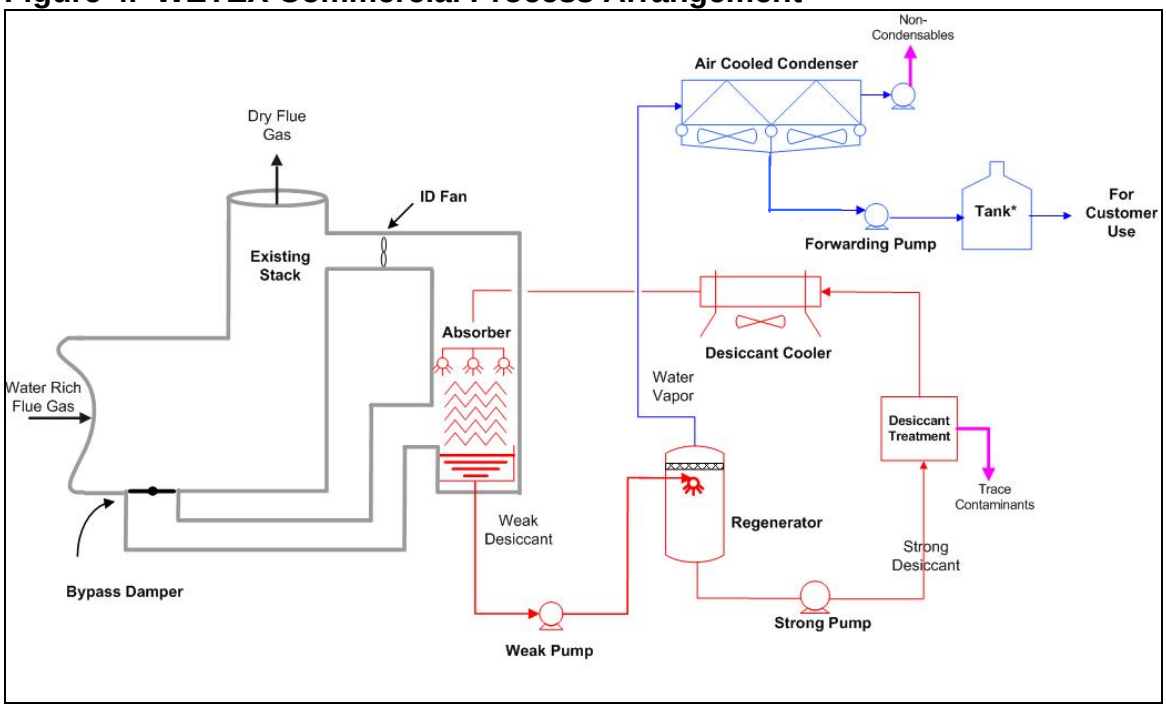

Figure 5. WETEX Conceptual Commercial Layout – Isometric

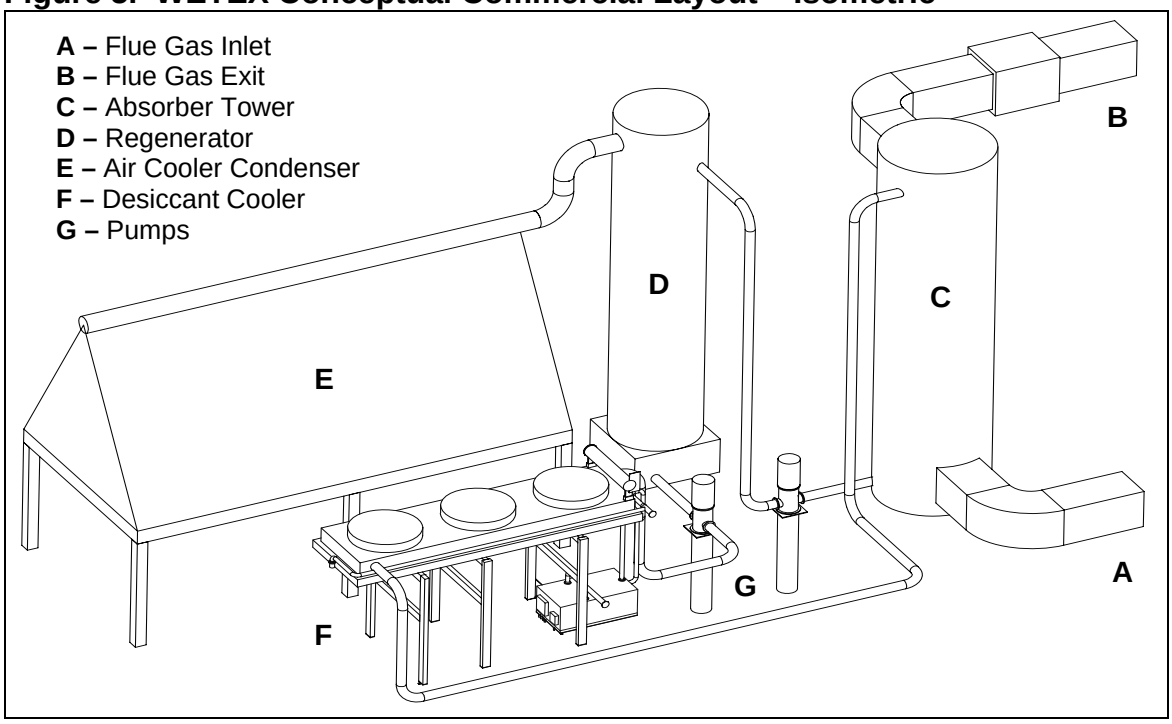

Figure 6. WETEX Conceptual Commercial Layout – Plan

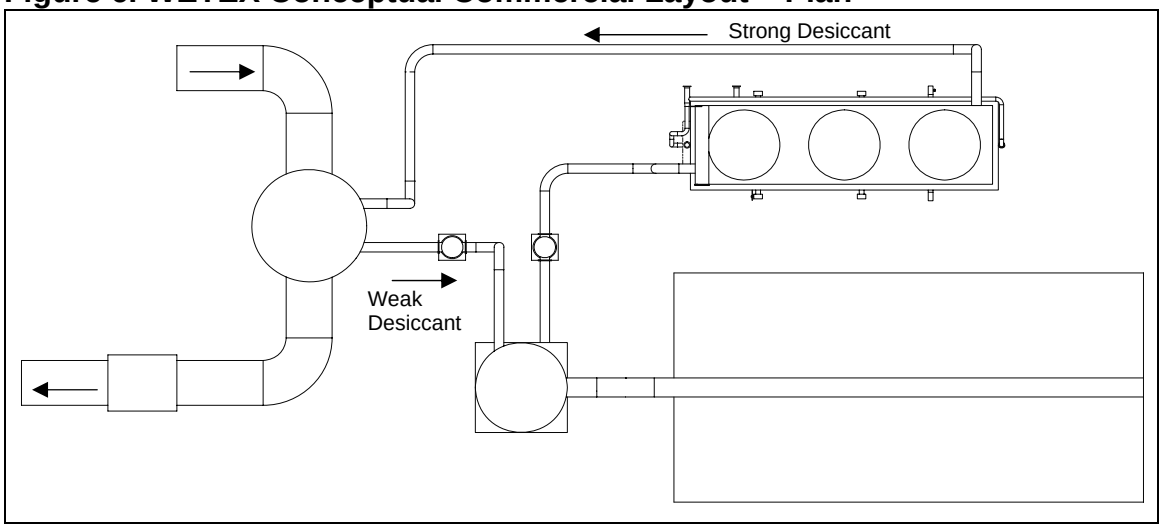

An economic evaluation for a commercial system was also conducted. The study results indicate that given the current increasing usage trends seen in power plant dry cooling technologies (Figure 7), as well as the observed increase in water rights legislation and water usage permitting difficulties, systems designed to recover the water contained in combustion flue gas streams will steadily become more commercially viable.

Figure 7. Dry Cooled Power Plant Orders Vs Time

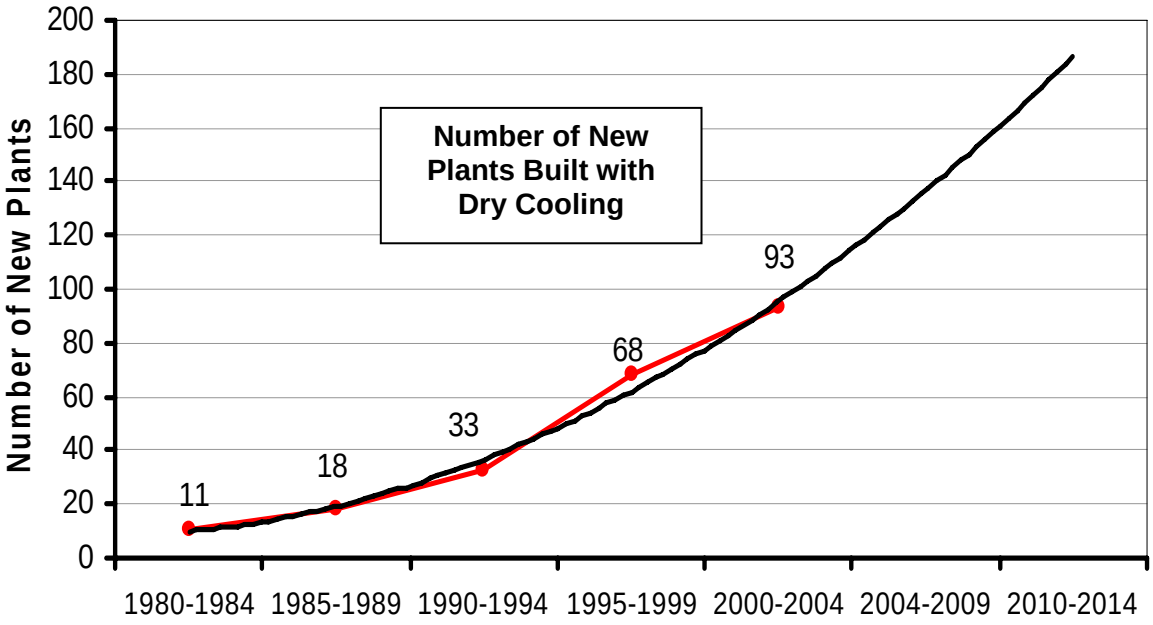

Although current economic models indicate that a net positive return on initial investment is achievable when employing this technology, it will take several years of development and continued focus on water resource management before systems such as this yield the level of return that will warrant their common use.

REFERENCES

1. Hurley, J.P.; Weber, G.F.; Henderson, A.K.; Hajicek, D.R.; Kleven, P.L.; Collings, M.E. *Engineering Development of Coal-Fired High-Performance Power Systems – Phase II* ; Final Report for United Technologies Research Center Contract No. DE-AC22-95PC95144; Energy & Environmental Research Center: Grand Forks, ND, Feb 2001.