EVALUATION OF MERCURY EMISSIONS FROM COAL-FIRED FACILITIES WITH SCR AND FGD SYSTEMS

Topical Report No. 2

U.S. DOE NETL Cooperative Agreement DE-FC26-02NT41589

Issued: October 2004

J. A. Withum
S. C. Tseng
J. E. Locke

CONSOL Energy Inc.,
Research & Development
4000 Brownsville Rd.
South Park, PA 15129
(412) 854-6600

DISCLAIMER

This report was prepared as an account of work sponsored by an agency of the United States Government. Neither the United States Government nor any agency thereof, nor any of their employees, makes any warranty, express or implied, or assumes any legal liability or responsibility for the accuracy, completeness, or usefulness of any information, apparatus, product, or process disclosed, or represents that its use would not infringe privately owned rights. Reference herein to any specific commercial product, process, or service by trade name, trademark, manufacturer, or otherwise does not necessarily constitute or imply its endorsement, recommendation, or favoring by the United States Government or any agency thereof. The views and opinions of authors expressed herein do not necessarily state or reflect those of the United States Government or any agency thereof.

ABSTRACT

CONSOL Energy Inc., Research & Development (CONSOL), with support from the U.S. Department of Energy, National Energy Technology Laboratory (DOE) is evaluating the effects of selective catalytic reduction (SCR) on mercury (Hg) capture in coal-fired plants equipped with an electrostatic precipitator (ESP) - wet flue gas desulfurization (FGD) combination or a spray dyer absorber – fabric filter (SDA-FF) combination. In this program CONSOL is determining mercury speciation and removal at 10 coal-fired facilities. The objectives are 1) to evaluate the effect of SCR on mercury capture in the ESP-FGD and SDA-FF combinations at coal-fired power plants, 2) evaluate the effect of catalyst degradation on mercury capture; 3) evaluate the effect of low load operation on mercury capture in an SCR-FGD system, and 4) collect data that could provide the basis for fundamental scientific insights into the nature of mercury chemistry in flue gas, the catalytic effect of SCR systems on Hg speciation and the efficacy of different FGD technologies for Hg capture.

This document, the second in a series of topical reports, describes the results and analysis of mercury sampling performed on a 330 MW unit burning a bituminous coal containing 1.0% sulfur. The unit is equipped with a SCR system for NOx control and a spray dryer absorber for SO_2 control followed by a baghouse unit for particulate emissions control. Four sampling tests were performed in March 2003. Flue gas mercury speciation and concentrations were determined at the SCR inlet, air heater outlet (ESP inlet), and at the stack (FGD outlet) using the Ontario Hydro method. Process stream samples for a mercury balance were collected to coincide with the flue gas measurements. Due to mechanical problems with the boiler feed water pumps, the actual gross output was between 195 and 221 MW during the tests.

The results showed that the SCR/air heater combination oxidized nearly 95% of the elemental mercury. Mercury removal, on a coal-to-stack basis, was 87%. The mercury material balance closures for the four tests conducted at the plant ranged from 89% to 114%, with an average of 100%.

These results appear to show that the SCR had a positive effect on mercury removal. In earlier programs, CONSOL sampled mercury at six plants with wet FGDs for SO_2 control without SCR catalysts. At those plants, an average of 61±15% of the mercury was in the oxidized form at the air heater outlet.

The principal purpose of this work is to develop a better understanding of the potential Hg removal "co-benefits" achieved by NOx, and SO_2 control technologies. It is expected that this data will provide the basis for fundamental scientific insights into the nature of Hg chemistry in flue gas, the catalytic effect of SCR systems on Hg speciation and the efficacy of different FGD technologies for Hg capture. Ultimately, this insight could help to design and operate SCR and FGD systems to maximize Hg removal.

TABLE OF CONTENTS

Page

DISCLAIMER ii
ABSTRACT iii
INTRODUCTION 1
HOST UTILITY DESCRIPTION 1
MERCURY SAMPLING RESULTS 1
I. Test Matrix 1
II. Flue Gas Mercury Sampling Results 2
A. SCR Inlet 2
B. Air Heater Outlet 2
C. Stack 3
III. SCR/FGD System Hg Removal 3
IV. Mercury Material Balance 4
V. Comparison with Previous Results Obtained at Plants with No SCR 5
EXPERIMENTAL AND SAMPLING METHODS 5
I. Flue Gas Sampling Locations and Sampling Points 5
A. SCR Inlet 6
B. Air Heater Outlet (Spray Dryer Inlet) 6
C. Stack (Baghouse Outlet) 7
II. Flue Gas Mercury Measurements 7
III. Coal Sampling and Analysis 9
A. Coal Samples 9
B. Summary of the Results of Coal Analyses 12
IV. Process Samples 12
A. Bottom Ash 12
B. Spray Dryer Absorber Hopper Ash 13
C. Baghouse Hopper Ash 13
D. SDA Reagent (Lime Slurry) 14
V. Process Sample Analyses 15
A. Bottom Ash Analyses 15
B. SDA Hopper Ash Analyses 15
C. Baghouse Hopper Ash Analyses 16
D. SDA Reagent (Lime Slurry) Solids Analyses 20
E. Distribution of Mercury in Process Solids Samples 20
Quality Assurance / Quality Control 22
Blank Samples 22
NIST SRM Checks 22
Spike Sample Recoveries 23
Duplicate Analyses 23
Flue Gas Hg Concentration Detection Limits 23
Mercury Material Balance Calculation Method 24
Material Balance Closure for SiO_2 and Al_2O_3 25
Sensitivity of Ca/S Ratio on Material Balance Closure 26

LIST OF FIGURES

Page

Figure 1. Mercury Speciation 30
Figure 2. Plant 1 Process Flow Schematic. 31
Figure 3. SCR Inlet Sampling Location 32
Figure 4. SCR Inlet Hg Sampling Train. 33
Figure 5. Air Heater Outlet Sampling Location. 34
Figure 6. Air Heater Outlet Hg Sampling Train. 35
Figure 7. Stack Sampling Location 36
Figure 8. Stack Hg Sampling Train 37
Figure 9. Ontario-Hydro Sampling Train Schematic. 38
Figure 10. Coal Sampling port. 39
Figure 11. Coal Sampling buckets. 39
Figure 12. Collecting coal sample. 40
Figure 13. Bottom Ash Sampling Location. 40
Figure 14. Arrangement of Baghouse Hoppers. 41
Figure 15. Baghouse Hopper Ash Sampling Port. 41
Figure 16. Hg concentration vs. carbon content in baghouse hopper ash samples. 42

LIST OF TABLES

Page

Table 1. Sampling Test Matrix 1
Table 2. Flue Gas Hg Speciation at the SCR Inlet 2
Table 3. Flue Gas Hg Speciation at the Air Heater Outlet 3
Table 4. Flue Gas Hg Speciation at the Stack 3
Table 5. Flue Gas Mercury Removal 4
Table 6. Material Balance for Mercury 4
Table 7. CONSOL Energy's Previous Test Data – Plants Without SCR. 5
Table 8. Hg Speciation by Train Component 8
Table 9. List of coal samples. 11
Table 10. Coal Analyses 12
Table 11. List Of Bottom Ash Samples 13
Table 12. List of Baghouse Hopper Ash Samples. 14
Table 13. Lime Slurry Samples Collected 14
Table 14. Analyses of Bottom Ash Samples 15
Table 15. Analyses of the SDA Hopper Ash Sample 16
Table 16. Analyses of Baghouse Hopper Ash Samples. 17
Table 16. Analyses of Baghouse Hopper Ash Samples (cont'd). 18
Table 16. Analyses of Baghouse Hopper Ash Samples (cont'd). 19
Table 17. Analyses of Lime Slurry Solids Samples. 20
Table 18. Summary of Results of Analyses of Process Solids Samples. 21
Table 19. NIST SRM Analyses 23
Table 20. Flue Gas Hg Detection Limits 24
Table 21. Calculated flow rates of lime slurry and the Hg input via the lime slurry 25
Table 22. Summary of material balance closure for SiO_2. 26
Table 23. Summary of material balance closure Al_2O_3. 26

Table 24. Material balance closure for Hg, SiO_2, and Al_2O_3 at Ca/S ratio of 2.0 28
Table 25. Material balance closure for Hg, SiO2, and Al2O3 at Ca/S ratio of 1.7 29

LIST OF APPENDICES

APPENDIX A	Mercury Sampling Data	A-1
APPENDIX B	Plant 1 Process Data	B-1
APPENDIX C	Flue Gas Hg Data	C-1
APPENDIX D	Process Material Data	D-1

LIST OF ABBREVIATIONS

acfm	-	actual cubic feet per minute (wet)
am	-	morning
Btu	-	heating value in British Thermal Units
cfm	-	cubic feet per minute
CO_2	-	carbon dioxide
CONSOL R&D	-	CONSOL Energy Inc., Research and Development
CVAA	-	cold vapor atomic absorption
DI	-	deionized water
dscf	-	dry standard cubic feet
dscfm	-	dry standard cubic feet per minute
EPA	-	U.S. Environmental Protection Agency
ESP	-	electrostatic precipitator
FGD	-	wet flue gas desulphurization
ft	-	feet
ft^2	-	square feet
ft^3	-	cubic feet
gm	-	grams
gpm	-	gallons per minute
gr	-	grains
HCl	-	hydrochloric acid
Hg	-	mercury
Hg^{part}	-	mercury in particulate form
Hg^{total}	-	total mercury in particulate, oxidized, and elemental forms
Hg^{++}	-	mercury in oxidized form
Hg^{o}	-	mercury in elemental form
HNO_3	-	nitric acid
H_2O	-	water
hr	-	hour
ICP-AES	-	inductively coupled plasma-atomic emission spectrometer
in	-	inch
KCl	-	potassium chloride
$KMnO_4$	-	potassium permanganate
L	-	liter
lb	-	pound
m	-	meter
m^3	-	cubic meter
mg	-	milligram, 10^{-3} gram

LIST OF ABBREVIATIONS (continued)

min	-	minute
mL	-	milliliter
M	-	molar, mol/L
MM	-	million
mol	-	mole
ng	-	nanogram, 10^{-9} gram
N_2	-	molecular nitrogen
NIST	-	National Institute of Standards and Technology
NO	-	nitric oxide
NO_2	-	nitrogen dioxide
O_2	-	molecular oxygen
O_3	-	ozone
pm	-	afternoon
PM	-	particulate matter
ppb	-	parts per billion
ppm	-	parts per million
ppmv	-	parts per million by volume
PRSD	-	percent relative standard deviation
QA	-	quality assurance
QC	-	quality control
rpm	-	revolutions per minute
scf	-	standard cubic feet (68EF and 29.92"Hg)
scfm	-	standard cubic feet per minute
SRM	-	Standard Reference Material
temp	-	temperature
tph	-	tons per hour
wt	-	weight
v	-	volts
vs	-	versus
°F	-	temperature in degrees Fahrenheit
~	-	approximately
<	-	less than
>	-	more than
µg	-	microgram, 10^{-6} gram

INTRODUCTION

The CONSOL Energy Inc. Research and Development (CONSOL R&D) Exploratory and Environmental Research Group conducted a series of flue gas mercury (Hg), measurements at Plant 1 during the week of March 3, 2003, under U. S. Department of Energy (DOE) Cooperative Agreement No. DE-FC26-02NT41589. The test program consisted of four sets of measurements across the combustion emission control system that consists of a selective catalytic reduction (SCR) unit, spray dryer, and baghouse.

The Hg measurements were made using the Ontario-Hydro Flue Gas Hg Speciation Method at the SCR inlet, Air Heater Outlet (upstream from the spray dryer), and the Stack. The testing conducted by CONSOL R&D is documented in this report.

HOST UTILITY DESCRIPTION

The generating unit at is a wall-fired, bituminous coal boiler generator, rated at 330 MW output, with an SCR unit, spray dryer, and baghouse to control combustion-generated pollutants. These pollution control devices are operated year-round. The plant typically burns bituminous coal containing 1% sulfur. At times, the plant provides steam to a neraby citrus-processing plant.

Due to boiler feed water pump problems, the actual gross generation was between 195 and 210 MW during the test program.

MERCURY SAMPLING RESULTS

I. Test Matrix

The Hg measurements consisted of a total of four tests over three days. The test matrix is shown in Table 1.

Table 1. Sampling Test Matrix

Date	Activity	Hg Sampling			Process Sampling			
		SCR Inlet	Air Heater Outlet	Stack Outlet	Coal Samples	Bottom Ash	Lime Slurry	Baghouse Ash
03/03/03	Arrive, Setup	---	---	---	---	---	---	---
03/04/03	Test 1	X	X	X	X	X	X	X
03/05/03	Plant Off-line	---	---	---	---	---	---	---
03/06/03	Test 2	X	X	X	X	X	X	X
	Test 3	X	X	X	X	X	X	X
03/07/03	Test 4	X	X	X	X	X	X	X
	Pack, Demobilize	---	---	---	---	---	---	---

A total of 12 Hg measurements were conducted using ASTM Method D-6784-02 (Ontario Hydro Method). Mercury measurements were a maximum of 160 minutes in duration. Details of sampling conditions are provided later in this report.

To calculate a material balance, CONSOL R&D and plant personnel obtained process samples simultaneously during the gas sampling periods. Laboratory analyses were performed by CONSOL R&D and are included in this report.

II. Flue Gas Mercury Sampling Results

Figure 1 shows the mercury speciation for the four tests at each location. All tests were made isokinetically. A complete listing of Hg analyses is in Appendix C. The results at each location are discussed below.

A. SCR Inlet

Four Hg measurements were conducted at the SCR inlet. Table 2 summarizes the Hg measurements at the SCR inlet. The results show that more than 99% of the mercury was in the gas phase. The high percentage of gas phase mercury is expected due to the gas temperature (628 °F) at this location. The amount of elemental Hg was slightly more than that of the oxidized Hg. The average concentrations of the oxidized and elemental Hg were 4.84 and 5.79 μg/m^3, respectively. The average concentration of total Hg measured at this location was 10.76 μg/m^3.

Table 2. Flue Gas Hg Speciation at the SCR Inlet

Date	Test No.	Hg Concentration, μg/m^3 (dry std conditions)				Hg Flow, mg/sec			
		Hg^{part}	Hg^{++}	Hg^{0}	Hg^{total}	Hg^{part}	Hg^{++}	Hg^{0}	Hg^{total}
3/4/2003	1	0.14	4.86	4.32	9.61	<0.029	0.971	0.921	1.92
3/6/2003	2	<0.02	4.53	7.12	11.67	0.004	0.948	1.49	2.44
3/6/2003	3	0.06	4.92	7.36	12.34	0.013	1.06	1.58	2.66
3/7/2003	4	<0.02	5.03	4.37	9.42	<0.005	1.11	0.967	2.09
	Average	0.06	4.84	5.79	10.76	0.013	1.02	1.24	2.28
	Standard Deviation	0.06	0.21	1.59	1.47	0.0113	0.077	0.344	0.334
	PRSD	93.7	4.4	27.2	13.6	89.5	7.6	27.8	14.7

B. Air Heater Outlet

Four Hg measurements were conducted at the Air Heater outlet location. Table 3 summarizes the Hg measurements. There was very little elemental Hg detected at this location. The average concentrations of the particulate-bound, oxidized and elemental Hg measured at this location were 2.40, 7.37 and 0.53 μg/m^3, respectively. The average concentration of total Hg was 10.30 μg/m^3. The concentration of the oxidized Hg detected in the second test was significantly higher than those measured in the other three tests, although the ratio of the oxidized to total Hg did not seem to vary. The Hg content in the coal burned during the second test was the higher than in the other

tests; however, it was not high enough to account for all of the additional mercury. The reason for the higher mercury concentration could not be determined.

Table 3. Flue Gas Hg Speciation at the Air Heater Outlet

Date	Test No.	Hg Concentration, µg/m^3 (dry std conditions)				Hg Flow, mg/sec			
		Hg^{part}	Hg^{++}	Hg^{0}	Hg^{total}	Hg^{part}	Hg^{++}	Hg^{0}	Hg^{total}
3/4/2003	1	2.96	5.27	0.36	8.6	0.636	1.13	0.078	1.85
3/6/2003	2	1.6	13.6	0.89	16.09	0.445	3.77	0.248	4.47
3/6/2003	3	1.74	7.53	0.5	9.77	0.404	1.75	0.116	2.27
3/7/2003	4	3.29	3.06	0.37	6.72	0.802	0.746	0.090	1.64
	Average	2.4	7.37	0.53	10.3	0.572	1.85	0.133	2.56
	Standard Deviation	0.85	4.54	0.25	4.06	0.184	1.35	0.078	1.30
	PRSD	35.6	61.6	46.7	39.5	32.2	72.7	58.6	50.9

C. Stack

Four Hg measurements were conducted at the Stack. Table 4 summarizes the Hg measurements. About two thirds of the Hg in the stack flue gas was in the oxidized form. The average concentrations of the particulate-bound, oxidized, and elemental Hg were 0.01, 0.61 and 0.30 µg/m^3. The average concentration of the total Hg was 0.92 µg/m^3.

Table 4. Flue Gas Hg Speciation at the Stack

Date	Test	Hg Concentration, µg/m^3 (dry std conditions)				Hg Flow mg/sec			
		Hg^{part}	Hg^{++}	Hg^{0}	Hg^{total}	Hg^{part}	Hg^{++}	Hg^{0}	Hg^{total}
3/4/2003	1	0.009	0.73	0.29	1.02	0.002	0.168	0.066	0.236
3/6/2003	2	0.005	0.65	0.37	1.02	0.001	0.156	0.087	0.244
3/6/2003	3	0.005	0.5	0.36	0.86	0.001	0.122	0.086	0.210
3/7/2003	4	0.019	0.56	0.18	0.76	0.005	0.146	0.049	0.201
	Average	0.01	0.61	0.3	0.92	0.002	0.148	0.072	0.223
	Standard Deviation	0.01	0.1	0.08	0.13	0.0017	0.019	0.018	0.021
	PRSD	65.2	16.7	27.4	14.3	71.7	13.1	24.9	9.3

III. SCR/FGD System Hg Removal

Table 5 summarizes the flue gas Hg removal across the SCR/FGD system. The coal-to-stack average Hg removal was 87.3 percent. Comparing the mercury at the stack to the mercury at the air heater outlet, the average removal was 90%.

Table 5. Flue Gas Mercury Removal

Date	Test No.	System Mercury Reduction					
		Ontario Hydro Results, mg Hg^{total} /sec			Coal Feed Based Reduction, mg Hg^{total} /sec		
		Air Heater Outlet	Stack Emissions	% Reduction	Coal Feed	Stack Emissions	% Reduction
03/04/03	1	1.85	0.236	87.2	1.33	0.236	82.0
03/06/03	2	4.47	0.244	94.5	2.19	0.244	89.0
03/06/03	3	2.27	0.210	90.7	1.87	0.210	88.8
03/07/03	4	1.64	0.201	87.7	1.89	0.201	89.4
	Average	2.56	0.223	90.0	1.82	0.223	87.3
	Standard Deviation	1.30	0.021	2.9	0.38	0.021	3.8
	PRSD	50.9	9.2	3.2	20.8	9.2	4.3

IV. Mercury Material Balance

An important criterion to gauge the overall quality of the tests is to conduct a mass balance to account for the mercury entering and leaving the plant during the tests. The mercury material balance closure is the total mercury output from the plant divided by the total mercury input (expressed as %). The total mercury input is the sum of the amounts of mercury in the coal and lime slurry entering the plant. The total mercury output is the sum of the amounts of mercury leaving the plant through bottom ash, baghouse hopper ash, and stack flue gas. Summarized in Table 6 are the results of the mercury material balance closure calculations. For the four tests conducted at the plant, the calculated mercury material balance closures ranged from 89% to 114%. The material balance closures for mercury for all four tests are within the QA/QC criterion of 70-130% for a single test and the average value is 100%, which is within the QA/QC criterion of 80-120% for multiple tests.

Table 6. Material Balance for Mercury.

Test No.	1	2	3	4
Hg input from Coal (lb/hr)	1.06E-02	1.74E-02	1.48E-02	1.50E-02
Hg input from lime slurry (lb/hr)	1.30E-04	1.71E-04	1.76E-04	1.38E-04
Hg input to the system (lb/hr)	1.07E-02	1.76E-02	1.50E-02	1.51E-02
Hg output from bottom ash (kpph)	9.71E-04	1.47E-03	1.96E-03	2.28E-03
Hg output from baghouse hopper ash (kpph)	8.76E-03	1.22E-02	1.35E-02	9.61E-03
Hg output from stack gas (kpph)	1.90E-03	1.90E-03	1.67E-03	1.59E-03
Hg output from the system (kpph)	1.16E-02	1.56E-02	1.71E-02	1.35E-02
Hg material balance closure	109%	89%	114%	89%
Average Hg Material Balance	100±13%			

V. Comparison with Previous Results Obtained at Plants with No SCR

CONSOL R&D conducted sampling at several plants with an ESP and wet FGD combination.[1] These results are listed in Table 7. Because Plant 1 had a spray dryer/baghouse, the total mercury removals are not directly comparable. However, the mercury speciation at the air heater outlet can be compared to examine the effect of the SCR on mercury oxidation. At most of the plants without an SCR (Table 7) the average Hg^{2+}+Hg^{part}:Hg^{0} ratio was about 80:20 at the air heater outlet. At Plant 1 a higher oxidation ratio (about 95:5, Table 3) was observed.

Table 7. CONSOL Energy's Previous Test Data – Plants Without SCR.

Plants Without SCR	Coal Content, dry basis			% Elemental Mercury at		Scrubber Type	Range of Observed Total Hg Removals (%)
	% Sulfur	% Chlorine	ppm Hg	Economizer Outlet	AH Outlet		
A	3.5	0.11	0.12	NM	19	Mg-Lime	64 to 70
B	3.8	0.16	0.09	NM	22	LSFO	53 to 60
C	3.5	0.11	0.09	NM	13	LSFO	62 to 80
D	4.2	0.23	0.09	NM	24	Chiyoda Limestone	69 to 82
E	4.1	0.14	0.08	NM	20	LSFO	63 to 70
E[a]	4.3	0.17	0.06	89	27	LSFO	NM
F	3.5	0.13	0.19	NM	29	Mg-Lime	60 to 67

NM = Not Measured [a]Measured after the installation of Low-NOx burners

EXPERIMENTAL AND SAMPLING METHODS

CONSOL R&D performed flue gas Hg determinations using the Ontario-Hydro sampling method. As a quality assurance/quality control (QA/QC) measure, samples of the coal, bottom ash, spray dryer lime slurry, and baghouse ash, were taken to determine a mercury balance across the system.

I. Flue Gas Sampling Locations and Sampling Points

Three sampling locations, the SCR inlet, Air Heater Outlet (upstream of the spray dryer), and Stack outlet, were tested. Figure 2 is a flow schematic indicating the sampling locations at Plant 1.

[1] DeVito, M.S., J.A. Withum and R.M. Statnick, Flue gas Hg measurements from coal-fired boilers equipped with wet scrubbers, *International Journal of Environment and Pollution*, Vol. 17, Nos. 1/2, P 126-142 (2002).

A. SCR Inlet

Figure 3 is a schematic of the SCR inlet sampling location. The duct is approximately 11'-3" deep and 48'-1" wide. A single point was used for sampling at this location at ~4' into the duct and ~7' above the bottom of the duct.

Preliminary pitot surveys were conducted on the March 3, 2003, and the flow was found to be laminar. Subsequently, Hg measurements were conducted with the sampling nozzle oriented parallel to and directly into the flow. A single point was sampled through the top of the duct.

Four Hg measurements were performed on the SCR inlet. The sample train was prepared in a Method 17 configuration using an in-stack 19 mm x 90 mm quartz-fiber thimble filter. The filter apparatus was connected to a heated probe that was attached to the impinger train with a flexible heated sample line. Figure 4 is a photograph of the Hg sampling train on the SCR inlet. Hg measurements were conducted isokinetically, at a single sample point.

Ideally each sampling run would have been of 120-minute duration. However, due to high particulate loading at this site, excessive vacuum, caused by filter particulate loading, forced the early termination of Test Runs 1, 2, and 4 at 100, 90, and 100 minutes, respectively. The filter was changed out at 70 minutes in Run 3 allowing for the test duration of 120-minutes.

B. Air Heater Outlet (Spray Dryer Inlet)

Figure 5 is a schematic of the Air Heater outlet sampling location. Flue gas is split between two ducts, referred to as East Duct and West Duct, each are approximately 11'-3" deep and 22'-5" wide. Each duct was sampled through four test ports, in which two sample points were measured in each, for a total of 16 sample points, as determined by EPA Method 1.

Four Hg measurements were performed on the Air Heater Outlet. The sample train was prepared in a Method 17 configuration using an in-stack 19 mm x 90 mm quartz-fiber thimble filter. The filter apparatus was connected to a heated probe that was attached to the impinger train with a Method 5 filter by-pass piece. Hg measurements were conducted with the sampling nozzle oriented parallel to and directly into the gas flow. Figure 6 is a photograph of the Hg sampling train on the Air Heater outlet. Hg measurements were conducted isokinetically.

Initially, a sampling duration of 80 minutes per test was selected, based on the preliminary pitot surveys conducted on March 3, 2003. However, due to boiler load changes, flow rates varied daily, forcing adjustments in sample durations.

A pitot survey prior to Run 2 on March 6, 2003 detected no gas flow in the East Duct and the gas flow in the West Duct had increased. To compensate for this process change, a smaller sampling nozzle was used and the test duration was increased to 96

minutes. Sampling was conducted in the East Duct at an orifice differential pressure of 0.05 in. H_2O.

Flow conditions remained unchanged through Run 3; however sampling was conducted only in the West Duct. Sampling duration was 96 minutes.

Normal flow returned to the East Duct on March 7, 2003. During Run 4, the nozzle size was increased, both ducts were sampled, and the sample duration was increased to 160 minutes to allow for a larger sample volume.

C. Stack (Baghouse Outlet)

Figure 7 is a schematic of the Stack sampling location. The stack is approximately 17'-2" in diameter. Sampling was conducted through four sample access ports, each with three sample points, as determined by EPA Method 1.

Preliminary pitot surveys were conducted on the March 3, 2003, and the flow was found to be laminar. Hg measurements were conducted with the nozzle oriented vertically, directly into the flow.

Four 120-minute sample runs were performed at the Stack sampling location. A standard Method 5 sample train configuration was utilized for this location. Four ports, each with three sample points, were sampled for a total of twelve sample points. Figure 8 is a photograph of the Hg sampling train on the stack. Hg measurements were conducted isokinetically.

II. Flue Gas Mercury Measurements

Flue gas mercury measurements were obtained using the Ontario-Hydro Hg speciation train. The sampling train schematic is shown in Figure 9.

Flue gas was extracted from the flue gas stream and pulled through a heated glass-lined probe and quartz filter. Total particulate matter mass loading was calculated from the solids collected prior to and in the filter. Probe and filter temperatures were maintained at 300 °F ± 25 °F at the SCR Inlet, 275 °F ± 25 °F at the Air Heater Outlet, and 250 °F ± 20 °F at the Stack. Where particle loading is high, the probe and filter temperature were to be maintained as close as practical to the flue gas temperature to minimize mercury capture by particles in the probe or on the filter. However, due to a malfunctioning probe heater, the Air Heater Outlet probe could not be maintained at the target temperature.

Mercury collected prior to and in the filter is assumed to be particulate Hg (Hg^{part}). The flue gas exits the quartz filter and passes through a series of chilled impingers. The first three impingers are filled with 100 ml of a 1M-potassium chloride (KCl) solution. It is assumed these impingers capture oxidized forms of Hg in the flue gas (Hg^{++}). The next impinger is filled with 100 ml of a 5% nitric acid and 10% H_2O_2 solution. The purpose of this impinger is to remove SO_2 from the flue gas to preserve the oxidizing strength of

the permanganate impingers. Hg collected in this impinger is assumed to be the elemental form (Hg^0). The next two impingers are filled with 100 ml of an acidic potassium permanganate ($KMnO_4$) solution. It is assumed that these impingers collect elemental mercury (Hg^0). The next impinger is blank to catch any excess moisture. The gas exits the impinger train through a silica gel-filled impinger that removes the moisture from the flue gas. Table 8 shows the train design results in the species collection Hg sequence.

Table 8. Hg Speciation by Train Component

Train Component	Species Measured
Probe & Nozzle Rinse	Hg^{part}
Quartz Filter	Hg^{part}
KCl Impingers	Hg^{++}
HNO_3/H_2O_2 Impinger	Hg^0
$KMnO_4$ Impingers	Hg^0
HCl Rinse of $KMnO_4$ Impingers	Hg^0

The absorbing solutions were made fresh daily. The impingers were charged and the sampling components were transported to the required locations. The sampling trains were assembled, pre-heated, and checked for pitot and sample line leaks as detailed in EPA Methods 2 and 5, respectively. After passing the leak-check procedure, the sampling probes were inserted into their respective ducts, in-stack filters were allowed to heat to stack temperature, and sampling was initiated. Leak checks were also performed during port changes at the traversed locations (Air Heater Outlet and Stack).

Oxygen readings were monitored at the outlet of the sampling train using a Teledyne Model Max 5 portable analyzer (electrochemical O_2 sensor). At the completion of the sampling period, the sample trains were checked for leaks, purged for 10 min, and then disassembled. The components were transported back to the lab trailer for recovery. The Hg concentration of the individual impinger solutions was determined by cold vapor atomic absorption (CVAA) as specified in the ASTM Method. The concentration of Hg on the solids was determined by acid digestion followed by CVAA.

The amount of mercury collected in the impinger solutions was determined as outlined in EPA Method 29 and the Ontario-Hydro Draft Method. An aliquot of the impinger solution is acidified and the mercury is determined using cold vapor-atomic absorption spectroscopy. The atomic absorption spectrometer is calibrated with commercial mercury standard. The calibration is verified using NIST Standard 1641D. The calibration is reassessed periodically by analyzing a quality control standard. The instrument is recalibrated as required. Each sample matrix is analyzed as a set and an individual calibration curve is used for each set. Depending on sample type, selected samples are spiked with 2, 5, 10, or 15 ng/ml (ppb) of mercury and reanalyzed. Spike

recovery must be within ±30% or the sample is diluted and reanalyzed. Selected samples are analyzed in duplicate. The duplicates must be within ±30% or the analyses are repeated.

Where sufficient solids were collected, particulate mercury was analyzed using a 0.5-1.0 gm ash sample. In cases where the particulate catch was low (primarily stack filters) the filter sample was digested. The samples were digested with aqua-regia in pressure vessels prior to analysis by CVAA.

III. Coal Sampling and Analysis

A. Coal Samples

The plant has four coal storage bins, each with four pulverized coal boiler feed pipes. Each coal pipe has two sampling ports. Samples were collected from one of the ports on two of the four pipes from each bin in service. Approximately one-quart volume of coal was collected from each pipe, twice per test. The first sample was collected during the first hour of the test and the second sample during the second hour of the test. During the first test, only two coal bins, A and C, were in service. During the remaining three tests, three coal bins, A, C, and D, were in service. Shown in Figure 10 is a picture of a coal sampling port that consists of a ball valve teed into a two-inch pipe that is welded to the coal pipe. The coal pipe was too hot to touch.

Shown in Figure 11 is a picture of the three coal sampling buckets. A hole was cut into the lid near the edge of each bucket. Before hanging the bucket to the tee of the sampling port, the ball valve was opened to allow any residual coal particles deposited inside the sampling port to be flushed out. The valve was then closed and the bucket was hung on the tee of the sampling port as shown in Figure 12. The valve was re-opened to collect coal samples.

All of the coal collected during one test run was poured into a separate five-gallon bucket, which was allowed to cool and then sealed. The buckets of combined samples from each test were brought back to CONSOL R&D for analyses.

CONSOL R&D and Plant 1 personnel collected coal samples during the first test run. For the remaining three tests, CONSOL R&D personnel collected the coal samples. During the first hour of the first test, coal was collected from Coal Pipe #A1, Sampling Port #BB; and Coal Pipe #C3, Sampling Port #AA. During the second hour of testing the latter port was plugged and coal was collected from Coal Pipe #A1, Sampling Port #BB; and Coal Pipe #C1, Sampling Port #BB.

During the first hour of the second test, coal was collected from Coal Pipe #A1, Sampling Port #BB; Coal Pipe #C3, Sampling Port #BB; Coal Pipe #D4, Sampling Port #AA; and Coal Pipe #D3, Sampling Port #AA. During the second hour of the test, the last two ports were plugged and coal was collected from the first two ports and Coal Pipe #D3, Sampling Port #BB.

During the third and fourth tests, coal was collected from three ports, Coal Pipe #A1, Sampling Port #BB; Coal Pipe #C3, Sampling Port #BB; and Coal Pipe #D3, Sampling Port #BB. Table 9 is a list of the coal samples collected during the four tests at this plant.

Table 9. List of coal samples.

Sample Identification	Container Identification	Sampling Location	Sampling Time/Duration
Plant-01 Coal-T1	03/4/03 Coal	Coal Pipe # A1, Sampling Port # BB	3.4.2003 02:25 PM-02:32 PM
		Coal Pipe # C3, Sampling Port # AA	3.4.2003 02:35 PM-02:45 PM
		Coal Pipe # A1, Sampling Port # BB	3.4.2003 03:58 PM-04:14 PM
		Coal Pipe # C1, Sampling Port # BB	3.4.2003 03:35 PM-03:57 PM
Plant-01 Coal-T2	3/6/03 Coal AM	Coal Pipe # A1, Sampling Port # BB	3.6.2003 10:32 AM-10:47 AM
		Coal Pipe # C3, Sampling Port # BB	3.6.2003 10:26 AM-10:41 AM
		Coal Pipe # D4, Sampling Port # AA	3.6.2003 10:26 AM-10:39 AM,
		Coal Pipe # D3, Sampling Port # AA	3.6.2003 10:39 AM-10:46 AM
		Coal Pipe # A1, Sampling Port # BB	3.6.2003 11:44 AM-12:00 PM
		Coal Pipe # C3, Sampling Port # BB	3.6.2003 11:46 AM-11:56 AM
		Coal Pipe # D3, Sampling Port # BB	3.6.2003 11:41 AM-12:01 PM
Plant-01 Coal-T3	3/6/03 Coal PM	Coal Pipe # A1, Sampling Port # BB	3.6.2003 02:28 PM-02:46 PM
		Coal Pipe # C3, Sampling Port # BB	3.6.2003 02:29 PM-02:48 PM
		Coal Pipe # D3, Sampling Port # BB	3.6.2003 02:25 PM-02:49 PM
		Coal Pipe # A1, Sampling Port # BB	3.6.2003 03:34 PM-03:43 PM
		Coal Pipe # C3, Sampling Port # BB	3.6.2003 03:29 PM-03:41 PM
		Coal Pipe # D3, Sampling Port # BB	3.6.2003 03:31 PM-03:42 PM
Plant-01 Coal-T4	3/7/03 Coal	Coal Pipe # A1, Sampling Port # BB	3.7.2003 10:08 AM-10:32 AM
		Coal Pipe # C3, Sampling Port # BB	3.7.2003 10:11 AM-10:30 AM
		Coal Pipe # D3, Sampling Port # BB	3.7.2003 10:12 AM-10:30 AM
		Coal Pipe # A1, Sampling Port # BB	3.7.2003 11:35 Am-11:45 AM
		Coal Pipe # C3, Sampling Port # BB	3.7.2003 11:39 AM-11:52 AM
		Coal Pipe # D3, Sampling Port # BB	3.7.2003 11:38 AM-11:53 AM

B. Summary of the Results of Coal Analyses

Coal Samples were analyzed using a direct mercury analyzer following the procedures of ASTM Method D6722. Detailed results of the coal analyses for each test are presented in Appendix D and summarized in Table 10.

Table 10. Coal Analyses
(Units are dry wt% basis, unless otherwise noted)

Date	03/04/03	03/06/03	03/06/03	03/07/03	Average	Standard Deviation	PRSD
Test Number	1	2	3	4			
Moisture (as det'd)	1.99	1.98	2.07	2.19	2.06	0.10	4.7
Ash	9.77	9.42	9.83	11.3	10.1	0.85	8.4
Volatile Matter	35.8	37.6	37.2	35.7	36.6	0.96	2.6
Heating Value (Btu/lb)	13,470	13,500	13,470	13,130	13,390	170	1.3
Carbon	75.7	75.6	75.3	74.1	75.1	0.74	1.0
Hydrogen	4.97	4.95	4.93	4.75	4.9	0.10	2.1
Nitrogen	1.57	1.59	1.62	1.48	1.57	0.06	3.9
Sulfur	0.92	1.18	1.11	0.85	1.02	0.16	15.3
Oxygen	7.00	7.20	7.09	7.47	7.19	0.20	2.8
Chlorine	0.117	0.102	0.123	0.072	0.104	0.02	22.0
Mercury (as det'd, ppm)	0.07	0.11	0.09	0.09	0.09	0.02	18.1

IV. Process Samples

Process samples collected during each test run at this plant included bottom ash, spray dryer hopper ash, baghouse hopper ash, and lime slurry feeding the spray dryer absorbers. Solid samples were analyzed using a direct mercury analyzer, following the procedures of ASTM D6722. The mercury in liquid samples was determined using CV-AAS. Detailed results of the process material analyses are presented in Appendix D.

A. Bottom Ash

CONSOL R&D personnel collected samples of the bottom ash with each test run. The samples were collected at the "Bottom Ash Conveyor Drop-Off" point, as shown in Figure 13. The sluiced bottom ash was pulled out by a drag chain and dropped to the conveyor belts moving upward at an angle of approximately 45 degrees from the ground. Immediately before the bottom ash dropped to the pit below, samples were collected using a shovel. Two samples were collected during each test, one during the first hour and the second in the second hour. The samples were kept in a five-gallon bucket. The amount of bottom ash collected during each test was approximately four gallons in volume. Table 11 is a list of the bottom ash samples collected at the plant.

Table 11. List Of Bottom Ash Samples

Sample Identification	Container Identification	Sampling Time
Plant-01 BmAsh-T1	3/4/03 03:15PM, 04:18 PM Bottom Ash	3/4/2003 03:15 PM; 04:18 PM
Plant-01 BmAsh-T2	3/6/03 10:55 AM, 12:10 PM Bottom Ash	3/6/2003 10:55 AM, 12:10 PM
Plant-01 BmAsh-T3	3/6/03 03:02 PM, 04:13 PM Bottom Ash	3/6/2003 03:02 PM, 04:13 PM
Plant-01 BmAsh-T4	3/7/03 10:26 AM, 11:43 AM Bottom Ash	3/7/2003 10:26 AM, 11:43 AM

B. Spray Dryer Absorber Hopper Ash

During normal operations, there is very little ash accumulated at the bottom section of the spray dryer absorber (SDA) hoppers. SDA ash passes through an air-actuated gate valve at the bottom of each SDA by gravity to the collection bin underneath the gate. Since the plant was operated at a reduced load, little or no SDA hopper ash was generated during the tests. However, a sample was obtained from the collection bin at 16:30 pm after the fourth test was completed.

C. Baghouse Hopper Ash

CONSOL R&D and a Plant 1 operator collected samples of the baghouse hopper ash with each test run.

There are 24 baghouse hoppers at the plant. The arrangement and identification of these hoppers are shown in Figure 14. The baghouse hopper ash samples were collected by opening the “side gates” located at the lower conical section of the hoppers. Each gate was secured by four bolts. Three of the bolts were removed and the last bolt was loosened by the accompanying plant operator. The gate was swiveled to one side and the baghouse hopper ash sample was then taken using a small shovel. The sampling location at one hopper is shown in Figure 15.

The ash samples were stored in a one-gallon plastic bag, which was immediately sealed and allowed to cool to the ambient temperature. The bag was then “double-bagged” using another one-gallon plastic bag to prevent moisture from entering and reacting with the ash in each bag.

The baghouse hopper ash samples taken during the tests are listed in Table 12. During Test 1 the plant was conducting emergency repair trying to bring the unit to full load and the assistance from the plant operator was not immediately available. Only Hoppers A56 and L61 were sampled during Test 1. For the remaining three tests, baghouse hopper ash samples were taken from six hoppers per test: A46, B66, E44, F64, L51, and M61.

Table 12. List of Baghouse Hopper Ash Samples.

Sample Identification	Container Identification	Sampling Location	Sampling Time
Plant-01 BHA-T1-1	3/4/03 Baghouse Hopper Ash	Baghouse Hopper # A-56	3.4.2003 03:08 PM
Plant-01 BHA-T1-2		Baghouse Hopper # L-51	3.4.2003 03:30 PM
Plant-01 BHA-T2-1	3/6/03 AM Run, Baghouse Hopper Ash	Baghouse Hopper # A-46	3.6.2003 11:07 AM
Plant-01 BHA-T2-2		Baghouse Hopper # B-66	3.6.2003 11:11 AM
Plant-01 BHA-T2-3		Baghouse Hopper # E-44	3.6.2003 11:16 AM
Plant-01 BHA-T2-4		Baghouse Hopper # F-64	3.6.2003 11:18 AM
Plant-01 BHA-T2-5		Baghouse Hopper # L-51	3.6.2003 11:25 AM
Plant-01 BHA-T2-6		Baghouse Hopper # M-61	3.6.2003 11:28 AM
Plant-01 BHA-T3-1	3/6/03 PM Run, Baghouse Hopper Ash	Baghouse Hopper # A-46	3.6.2003 03:53 PM
Plant-01 BHA-T3-2		Baghouse Hopper # B-66	3.6.2003 03:55 PM
Plant-01 BHA-T3-3		Baghouse Hopper # E-44	3.6.2003 03:57 PM
Plant-01 BHA-T3-4		Baghouse Hopper # F-64	3.6.2003 04:00 PM
Plant-01 BHA-T3-5		Baghouse Hopper # L-51	3.6.2003 04:02 PM
Plant-01 BHA-T3-6		Baghouse Hopper # M-61	3.6.2003 04:07 PM
Plant-01 BHA-T4-1	3/7/03 Baghouse Hopper Ash	Baghouse Hopper # A-46	3.7.2003 10:47 AM
Plant-01 BHA-T4-2		Baghouse Hopper # B-66	3.7.2003 10:49 AM
Plant-01 BHA-T4-3		Baghouse Hopper # E-44	3.7.2003 10:54 AM
Plant-01 BHA-T4-4		Baghouse Hopper # F-64	3.7.2003 10:57 AM
Plant-01 BHA-T4-5		Baghouse Hopper # L-51	3.7.2003 11:00 AM
Plant-01 BHA-T4-6		Baghouse Hopper # M-61	3.7.2003 11:03 AM

D. SDA Reagent (Lime Slurry)

CONSOL R&D personnel collected lime slurry samples during each test run. The samples were collected from the lime slurry discharge chute between the lime slaker and the lime slurry retention tank that feeds the spray dryer absorbers. Only one sample was collected during each test. Listed in Table 13 are the collected lime slurry samples.

Table 13. Lime Slurry Samples Collected

Sample Identification	Container Identification	Sampling Time/Duration
Plant-01 Lime Slurry-T1	3/4/03 03:20 PM lime slurry	3.4.2003 03:20 PM
Plant-01 Lime Slurry-T2	3/6/03 11:30 AM lime slurry	3.6.2003 11:30 AM
Plant-01 Lime Slurry-T3	3/6/03 03:20 PM lime slurry	3.6.2003 03:20 PM
Plant-01 Lime Slurry-T4	3/7/03 10:20 AM lime slurry	3.7.2003 10:20 AM

V. Process Sample Analyses

CONSOL R&D completed comprehensive analyses using a direct mercury analyzer following the procedures of ASTM Method D6722.

A. Bottom Ash Analyses

Table 14 is a list of the analyses of the four bottom ash samples collected at Plant 1 during each test. The amount of Hg detected ranged from 0.01 to 0.02 ppm.

Table 14. Analyses of Bottom Ash Samples

Sample Description	Bottom Ash Test 1	Bottom Ash Test 2	Bottom Ash Test 3	Bottom Ash Test 4
Test Date	3/4/2003	3/6/2003	3/6/2003	3/7/2003
Sample Time	15:15 / 16:18	10:55 / 12:10	15:02 / 16:13	10:26 / 11:43
Analytical No.	30759	30760	30761	30762
Moisture (as det'd, %)	0.22	0.08	0.25	0.24
Ash (dry, %)	93.9	98.0	96.8	96.8
Sulfur, total (dry, %)	0.16	0.08	0.12	0.06
CO_3 as C (as det'd %)	0.06	0.04	0.06	0.04
Carbon (dry, %)	5.67	2.11	3.41	2.5
Chlorine (dry, %)	0.085	0.06	0.05	0.04
Mercury (as det'd, ppm)	0.02	0.01	0.02	0.02
Major Ash Element (dry, %)				
SiO_2	53.6	55.3	56.7	58.4
Al_2O_3	23.3	21.2	20.6	26.2
TiO_2	1.24	1.01	0.95	1.21
Fe_2O_3	8.7	12.7	12.5	6.6
CaO	1.81	1.79	1.75	1.00
MgO	0.92	0.87	0.83	0.91
Na_2O	0.49	0.42	0.43	0.3
K_2O	2.07	1.95	1.94	2.54
P_2O_5	0.11	0.1	0.08	0.07
SO_3	0.41	0.21	0.3	0.15

B. SDA Hopper Ash Analyses

Table 15 is a list of the analyses of the SDA hopper ash samples. The amount of Hg and chlorine detected in these samples were 0.14 ppm and 0.091%, respectively.

Table 15. Analyses of the SDA Hopper Ash Sample.

Sample Description	SDA Hopper Ash
Sample Date	03/07/03
Sample Time	16:30
Analytical No.	30757
Moisture (as det'd, %)	1.28
Ash (dry, %)	83.6
Sulfur, total (dry, %)	1.46
CO_3 as C (as det'd %)	1.57
Carbon (dry, %)	2.44
Chlorine (dry, %)	0.091
Mercury (as det'd, ppm)	0.14
Major Ash Element (dry, %)	
SiO_2	25.4
Al_2O_3	5.27
TiO_2	0.22
Fe_2O_3	6.07
CaO	40.9
MgO	1.38
Na_2O	0.21
K_2O	0.66
P_2O_5	0.03
SO_3	3.65

C. Baghouse Hopper Ash Analyses

Due to a flooding at the baghouse hopper area during Test 1, only two hoppers (A56 and L61) were accessible and the ash in these hoppers was collected. For the remaining three tests, six hoppers (A46, B66, E44, F64, L51, and M61) were sampled. Results of analyses of the baghouse hopper ash samples are listed in Table 16.

The carbon contents in the baghouse hopper ash samples ranged from 2.03 to 9.75% and the mercury concentrations ranged from 0.29 to 0.55 ppm. The mercury content was not corelated with the carbon content in the baghouse hopper ash samples, as shown in Figure 16.

Table 16. Analyses of Baghouse Hopper Ash Samples.

Sample Description	Plant 01 BHA-T1-1	Plant 01 BHA-T1-2	Plant 01 BHA-T2-1	Plant 01 BHA-T2-2	Plant 01 BHA-T2-3	Plant 01 BHA-T2-4	Plant 01 BHA-T2-5	Plant 01 BHA-T2-6
Test No.	1		2					
Test Date	3/4/2003		3/6/2003					
Baghouse Hopper ID	A-56	L-61	A-46	B-66	E-44	F-64	L-51	M-61
Sample Time	15:08	15:30	11:07	11:11	11:16	11:18	11:25	11:28
Analytical No.	30734	30735	30736	30737	30738	30739	30740	30741
Moisture (as det'd, %)	1.06	0.30	1.31	1.46	1.33	1.32	0.61	1.46
Ash (dry, %)	88.4	88.1	90.2	89.2	89.0	89.2	87.8	89.6
Sulfur, total (dry, %)	3.54	4.31	5.10	5.10	4.32	4.59	5.35	5.14
CO_3 as C (as det'd %)	0.50	0.68	0.58	0.60	0.62	0.66	0.84	0.60
Carbon (dry, %)	6.76	8.31	2.10	2.03	2.15	7.42	7.75	2.30
Chlorine (dry, %)	0.546	0.747	0.274	0.294	0.253	0.274	1.102	0.528
Mercury (as det'd, ppm)	0.32	0.43	0.55	0.46	0.42	0.47	0.48	0.52
Major Ash Element (dry, %)								
SiO_2	31.3	34.2	23.1	22.1	22.6	22.4	26.8	21.7
$A_{l2}O_3$	13.9	17.3	11.1	10.2	10.1	10.5	13.9	10.4
TiO_2	0.66	0.79	0.49	0.44	0.43	0.45	0.62	0.45
Fe_2O_3	7.79	3.85	4.93	4.85	5.28	4.99	4.30	4.53
CaO	20.7	16.2	33.0	35.5	35.3	34.9	22.2	34.8
MgO	1.01	1.04	1.17	1.19	1.22	1.21	1.11	1.18
Na_2O	0.51	0.53	0.36	0.40	0.37	0.42	0.78	0.46
K_2O	1.43	2.01	1.22	1.10	1.10	1.13	1.63	1.11
P_2O_5	0.07	0.06	0.03	0.03	0.03	0.03	0.07	0.03
SO_3	8.8	10.8	12.8	11.8	10.8	11.5	13.4	12.9

Table 16. Analyses of Baghouse Hopper Ash Samples (cont'd).

Sample Description	Plant 01 BHA-T3-1	Plant 01 BHA-T3-2	Plant 01 BHA-T3-3	Plant 01 BHA-T3-4	Plant 01 BHA-T3-5	Plant 01 BHA-T3-6
Test No.	3					
Test Date	3/6/2003					
Baghouse Hopper ID	A-46	B-66	E-44	F-64	L-51	M-61
Sample Time	15:53	15:55	15:57	16:00	16:02	16:07
Analytical No.	30742	30743	30744	30745	30746	30747
Moisture (as det'd, %)	1.17	1.09	1.05	1.07	0.56	1.31
Ash (dry, %)	92.9	92.4	92.0	91.6	85.9	91.4
Sulfur, total (dry, %)	3.68	3.25	3.10	3.28	5.53	4.32
CO_3 as C (as det'd %)	0.40	0.38	0.41	0.44	0.83	0.47
Carbon (dry, %)	1.96	2.19	2.32	2.50	9.75	2.58
Chlorine (dry, %)	0.476	0.233	0.293	0.313	1.478	0.385
Mercury (as det'd, ppm)	0.36	0.30	0.29	0.32	0.42	0.44
Major Ash Element (dry, %)						
SiO_2	31.23	32.38	32.49	31.87	26.49	27.93
$A_{l2}O_3$	15.23	15.53	14.72	14.60	14.03	13.47
TiO_2	0.70	0.71	0.66	0.65	0.63	0.61
Fe_2O_3	6.83	6.86	7.42	6.83	4.00	5.96
CaO	23.7	23.6	24.3	25.3	21.3	28.3
MgO	1.16	1.17	1.16	1.17	1.15	1.19
Na_2O	0.40	0.43	0.40	0.41	0.85	0.44
K_2O	1.64	1.67	1.56	1.56	1.68	1.50
P_2O_5	0.05	0.06	0.06	0.05	0.09	0.04
SO_3	9.2	8.1	7.8	8.2	13.8	10.8

Table 16. Analyses of Baghouse Hopper Ash Samples (cont'd).

Sample Description	Plant 01 BHA-T4-1	Plant 01 BHA-T4-2	Plant 01 BHA-T4-3	Plant 01 BHA-T4-4	Plant 01 BHA-T4-5	Plant 01 BHA-T4-6
Test No.	4					
Test Date	3/7/2003					
Baghouse Hopper ID	A-46	B-66	E-44	F-64	L-51	M-61
Sample Time	10:47	10:49	10:54	10:57	11:00	11:03
Analytical No.	30748	30749	30750	30751	30752	30753
Moisture (as det'd, %)	0.93	0.73	0.99	0.75	0.78	0.98
Ash (dry, %)	91.7	90.8	91.9	90.2	87.1	90.7
Sulfur, total (dry, %)	3.47	2.40	3.49	2.59	4.63	2.82
CO_3 as C (as det'd, %)	0.37	0.41	0.38	0.41	0.83	0.43
Carbon (dry, %)	4.42	4.75	4.43	5.08	8.07	4.26
Chlorine (dry, %)	0.464	0.161	0.475	0.252	0.927	0.273
Mercury (as det'd, ppm)	0.43	0.30	0.42	0.32	0.38	0.35
Major Ash Element (dry, %)						
SiO_2	36.9	39.3	36.0	37.5	28.8	36.4
Al_2O_3	17.7	15.9	16.8	16.3	14.8	16.1
TiO_2	0.79	0.70	0.76	0.73	0.66	0.71
Fe_2O_3	4.75	7.66	4.95	5.52	3.76	6.09
CaO	18.4	18.1	19.7	19.8	22.0	19.9
MgO	1.06	1.02	1.10	1.07	1.17	1.06
Na_2O	0.39	0.37	0.37	0.35	0.69	0.36
K_2O	1.92	1.73	1.89	1.77	1.74	1.76
P_2O_5	0.05	0.05	0.05	0.05	0.07	0.05
SO_3	8.7	6.0	8.7	6.5	11.6	7.0

D. SDA Reagent (Lime Slurry) Solids Analyses

Each lime slurry sample was filtered to generate solids (i.e., filter cake) for subsequent analysis. The analyses of the lime slurry solids samples are listed in Table 17. The amount of Hg detected in each of these samples was 0.02 ppm. The filtrate was not analyzed because mercury is insoluble at the high pH of lime slurry (typically 12.4 pH).

Table 17. Analyses of Lime Slurry Solids Samples.

Sample Description	Lime Slurry Test 1	Lime Slurry Test 2	Lime Slurry Test 3	Lime Slurry Test 4
Test Date	03/04/03	03/06/03	03/06/03	03/07/03
Sample Time	15:20	11:30	15:20	10:20
Analytical No.	30754	30755	30756	30758
% Solids (as det'd)	17.4	19.1	16.1	14.4
Moisture (as det'd, %)	5.74	8.15	3.19	1.28
Ash (dry, %)	74.2	74.2	74.2	72.1
Sulfur, total (dry, %)	0.05	0.03	0.04	0.02
CO_3 as C (as det'd, %)	0.90	0.82	0.96	1.34
Mercury (as det'd, ppm)	0.02	0.02	0.02	0.02
Chlorine (dry, %)	<0.02	<0.02	<0.02	<0.02
Major Ash Element (dry, %)				
SiO_2	0.76	0.73	0.69	0.76
Al_2O_3	0.21	0.20	0.21	0.20
TiO_2	0.01	0.01	0.01	0.01
Fe_2O_3	0.10	0.08	0.08	0.08
CaO	72.6	74.3	73.5	72.1
MgO	1.22	1.38	1.44	1.45
Na_2O	0.02	0.02	0.01	0.03
K_2O	0.04	0.04	0.04	0.05
P_2O_5	0.01	<0.01	<0.01	<0.01
SO_3	0.13	0.09	0.10	0.06

E. Distribution of Mercury in Process Solids Samples

Table 18 is a comprehensive list of the analyses of three types of process solids samples: lime slurry solids, bottom ash and average baghouse hopper ash. Values in this table were used to calculate the material balance closure as explained in the next Section.

Table 18. Summary of Results of Analyses of Process Solids Samples.

Sample Description	Lime Slurry	Bottom Ash	Baghouse Hopper	Lime Slurry	Bottom Ash	Baghouse Hopper	Lime Slurry	Bottom Ash	Baghouse Hopper	Lime Slurry	Bottom Ash	Baghouse Hopper
Test No.	**1**	**1**	**1**	**2**	**2**	**2**	**3**	**3**	**3**	**4**	**4**	**4**
Moisture (as det'd, %)	5.74	0.22	0.68	8.15	0.08	1.25	3.19	0.25	1.04	1.28	0.24	0.86
Ash (dry, %)	74.2	93.9	88.2	74.2	98.0	89.2	74.2	96.8	91.0	72.1	96.8	90.4
Sulfur, total (dry, %)	0.05	0.16	3.93	0.03	0.08	4.93	0.04	0.12	3.86	0.02	0.06	3.23
CO_3 as C (as det'd %)	0.90	0.06	0.59	0.82	0.04	0.65	0.96	0.06	0.49	1.34	0.04	0.47
Carbon (dry, %)		5.67	7.54		2.11	3.96		3.41	3.55		2.50	5.17
Chlorine (dry, %)	<0.02	0.085	0.65	<0.02	0.06	0.45	<0.02	0.05	0.53	<0.02	0.04	0.43
Mercury (as det'd, ppm)	0.02	0.02	0.38	0.02	0.01	0.48	0.02	0.02	0.36	0.02	0.02	0.37
Major Ash Element (dry, %)												
SiO_2	0.76	53.6	32.7	0.73	55.3	23.1	0.69	56.7	30.4	0.76	58.4	35.8
Al_2O_3	0.21	23.3	15.6	0.2	21.2	11.0	0.21	20.6	14.6	0.20	26.2	16.3
TiO_2	0.01	1.24	0.73	0.01	1.01	0.48	0.01	0.95	0.66	0.01	1.21	0.73
Fe_2O_3	0.10	8.7	5.82	0.08	12.7	4.81	0.08	12.5	6.32	0.08	6.6	5.46
CaO	72.6	1.81	18.5	74.3	1.79	32.6	73.5	1.75	24.4	72.1	1.00	19.7
MgO	1.22	0.92	1.03	1.38	0.87	1.18	1.44	0.83	1.17	1.45	0.91	1.08
Na_2O	0.02	0.49	0.52	0.02	0.42	0.47	0.01	0.43	0.49	0.03	0.30	0.42
K_2O	0.04	2.07	1.72	0.04	1.95	1.22	0.04	1.94	1.60	0.05	2.54	1.80
P_2O_5	0.01	0.11	0.07	<0.01	0.10	0.04	<0.01	0.08	0.06	<0.01	0.07	0.05
SO_3	0.13	0.41	9.8	0.09	0.21	12.2	0.10	0.30	9.7	0.06	0.15	8.1

Quality Assurance / Quality Control

The sampling and analysis QA/QC procedures are described below.

- Personnel specifically trained and experienced in power plant sampling methods, including the Ontario-Hydro Hg sampling method, conducted all sampling,
- The sampling equipment was maintained and calibrated as required,
- Consistent sample preparation and recovery procedures were used,
- Samples were logged and tracked under the direction of sample team Group Leader,
- Individual calibration curves were developed for each sample matrix,
- NIST Standard Reference Material (SRM) and lab QC samples were analyzed to verify calibration curves,
- Duplicates of selected samples were analyzed to assure repeatability,
- Analyses of selected "spiked" samples were analyzed to assure sample recovery, and
- Interim data were reviewed to assure sample completeness.

All samples were obtained using the procedures described in EPA Method 5 and the Ontario-Hydro Hg Speciation draft method. Data were recorded on standard forms, which are included in Appendix A. The field data were reduced using standard "in-house" spreadsheets. Copies of the summary sheets are included in Appendix A. To assure consistency, all of the Ontario-Hydro train components were prepared and recovered under the supervision of a senior technician experienced in the Ontario-Hydro Hg speciation lab techniques. Copies of the recovery sheets are included in Appendix C.

The Ontario-Hydro sampling train analysis consisted of eight sub-samples. Each sub-sample analysis consisted of developing a calibration curve (absorbance versus Hg concentration in solution), checks of field and lab blanks, calibration checks with SRM and lab standards, selected duplicates and selected sample spikes. The laboratory summaries for each of these runs are contained in Appendix C.
A total of ~200 individual Hg determinations were completed, including 31 calibration standards, 9 blank samples, 24 NIST SRM or lab QC checks, 13 sample spikes, and 13 duplicate analyses.

Blank Samples

A total of 9 blank liquid samples were analyzed. The average blank value was <1.0 ng/ml (ppb in solution). The average blank value is much less than any individual Hg^{part}, Hg^{++}, or Hg^{0} determination in ng/ml and, more importantly, is much less than the Hg concentration detection limit (discussed later in this report). Consequently, in this report, blank concentrations were not subtracted out from any Hg determination.

NIST SRM Checks

Forty-two NIST SRM checks were conducted throughout the Hg determinations. Three standards were used in the determinations as detailed in Table 19.

Table 19. NIST SRM Analyses

NIST SRM	Standard Value (ng/ml)	Sample Fraction	Samples Analyzed	Average Result (ng/ml)	Percent of Standard	Standard Deviation (%)	Percent Relative Standard Deviation
1641D	8.0	Ontario Hydro Liquids	19	7.9	99.1	0.1	1.8
		Ontario Hydro Filters	7	8.1	101.3	0.1	1.6
		Process Liquids	4	7.7	95.9	0.2	2.2
1633B	141.0	Ontario Hydro Filters	3	144.0	102.1	6.1	4.2
		Process Solids	5	158.2	112.2	3.1	2.0
1632C	94.0	Process Solids	4	103.0	109.6	6.5	6.3

Spike Sample Recoveries

A total of 13 samples were spiked with a 2, 5, 10, or 15 ppb Hg standard and then re-analyzed to determine the percent spike recovery. The result of this QA/QC procedure was an average spike recovery of 91.6% recovery with a 5.9% standard deviation.

Duplicate Analyses

A total of 13 duplicate analyses were conducted periodically throughout the Hg determinations. The result of this QA/QC procedure was an average Hg determination that was 99.3% of the original Hg determination, with a 3.6% standard deviation.

Flue Gas Hg Concentration Detection Limits

For liquid samples, the flue gas Hg concentration was calculated using the following equation:

$$Hg\left[\mu g / m^3\right] = \frac{\left(C_{imp} \text{ x } V_{imp}\right)}{\left(V_{gas} \text{ x } 1000\right)}$$

where: C_{imp} = Hg concentration of impinger solution [ng/mL (ppb)]
V_{imp} = Liquid volume of impinger solution [mL]
V_{gas} = Flue gas sample volume [dry standard m^3]
1000 = Conversion factor [1000 ng per µg]

The flue gas Hg detection limit is reduced when the flue gas sample volume is increased or liquid volume of impinger solution is decreased. The CVAA is calibrated between 0 and 20 ng/ml. Over this range, the calibration curve between absorbance and concentration is linear. The lowest concentration standard used to develop the calibration curve is 0.500 ng/ml. In addition, the detection limit of the liquid CVAA analysis was <1.0 ng/ml. The prescribed sampling and recovery procedures result in final liquid volumes varying between 50 and 800 ml. The volume of flue gas collected varied between 0.91 and 2.05 dscm. The sampling variables result in sample-specific flue gas detection limit. The flue gas Hg detection limit for each sample matrix are listed

in Table 20.

Table 20. Flue Gas Hg Detection Limits

Matrix	Maximum Liquid Volume [ml]	Minimum Gas Volume [dscm]	Flue Gas Hg Detection Limit [µg/m^3]
Probe Rinse	148	0.91	0.16
KCl Impinger	646	0.91	0.71
HNO_3/H_2O_2 Impingers	177	0.91	0.19
$KMnO_4$ Impingers	344	0.91	0.38
HCl Rinse	100	0.91	0.11

Depending on the matrix, the flue gas Hg detection limit ranged from 0.11 to 0.71 µg/m^3. When compared with the total Hg concentrations ranging from 0.76 to 16.09 µg/m^3, the flue gas detection limit is low enough to be insignificant in the flue gas calculations.

Mercury Material Balance Calculation Method

One important criterion to gauge the overall quality of the tests is to conduct a mass balance to account for the Hg entering and leaving the plant during the tests. Mercury entered the plant through coal and lime slurry. Mercury left the plant via bottom ash, SDA hopper ash, baghouse hopper ash, and stack flue gas. The coal feed rate data were recorded and provided by the plant. The lime slurry feed rates were estimated based on the amounts of SO_2 removed during the tests and the Ca/S ratio provided by the plant. The amount of Hg in the stack flue gas was calculated based on the Ontario-Hydro data. The rates of bottom ash leaving the plant were calculated based on the assumption that 20 percent of the coal ash ended up as bottom ash. The rates of baghouse ash leaving the plant were calculated based on the assumption that 80 percent of the coal ash ended up as baghouse ash, plus all of the lime slurry fed to the SDA, plus all of the SO_2 captured in the SDA.

The plant was run at a reduced load due to some mechanical problems. No SDA hopper ash was discharged into the collection bins beneath the two SDA hoppers. Although one SDA hopper ash sample was collected at the end of the last test, the flow rate of this stream was believed to be very small and was not included in the material balance calculation.

The lime slurry injection rates into the SDA had to be estimated, because there was no device installed at the plant to record the consumption rate of lime slurry. During normal operation at full load (~330 MW), the Ca/S ratio was maintained at around 1.5. However, the amount of lime slurry injected into the SDA for SO_2 removal was not changed during the tests although the load was between 195 and 221 MW. This raised the Ca/S ratio to about 2.2 during the four tests.

The amount of sulfur entering the SDA is simply the difference between that the amount of sulfur in the coal entering the boiler and the amount of sulfur in the bottom ash

leaving the boiler. The amount of lime required is the amount of the sulfur entering the SDA times the Ca/S ratio.

The lime slurry sample collected at the plant was filtered and air-dried in the laboratory at CONSOL R&D. The air-dried sample was analyzed for Hg and other ingredients. Once the lime slurry flow rate was known, the Hg input via the lime slurry stream was calculated.

Summarized in Table 21 are the calculated flow rates of lime slurry (filtered, air-dried) and the Hg input via the lime slurry.

Table 21. Calculated flow rates of lime slurry and the Hg input via the lime slurry

Test No.	1	2	3	4
Coal sulfur input (kpph)	1.36	1.83	1.79	1.38
Bottom ash sulfur output (kpph)	4.93E-03	2.39E-03	3.93E-03	4.57E-03
Sulfur entering SDA (kpph)	1.36	1.83	1.79	1.38
Ca/S ratio	2.2			
Lime (as CaO) required (kpph)	5.22	7.04	6.87	5.31
Lime slurry (kpph, filtered, air dried)	6.51	8.54	8.79	6.92
Lime slurry (filtered, air-dried) Hg content (ppm)	0.02	0.02	0.02	0.02
Hg input via lime slurry (lb/hr)	1.30E-04	1.71E-04	1.76E-04	1.38E-04

Material Balance Closure for SiO_2 and Al_2O_3

By following the above procedures, the material balance closure for two major ash oxides, SiO_2 and Al_2O_3 can be calculated. Summarized in Tables 22 and 23 are the results of the material balance closure for these two oxides, which averaged 97% and 92%, respectively. The material balance closures for SiO_2 and Al_2O_3 are within the QA/QC criteria. These results provide an additional level of confidence in the material balance calculations for mercury.

Table 22. Summary of material balance closure for SiO_2.

Test No.	1	2	3	4
SiO_2 in coal ash (kpph)	7.86	7.61	8.39	10.56
SiO_2 in lime slurry (kpph)	0.05	0.07	0.06	0.06
SiO_2, input (kpph)	7.91	7.68	8.46	10.61
SiO_2 in bottom ash (kpph)	1.55	1.6	1.64	1.69
SiO_2 in baghouse hopper ash (kpph)	6.61	5.19	6.96	8.34
SiO_2, output (kpph)	8.16	6.79	8.6	10.03
SiO_2 material balance closure	103%	88%	102%	95%
Average SiO_2 Material Balance	97%			

Table 23. Summary of material balance closure Al_2O_3.

Test No.	1	2	3	4
Al_2O_3 in coal ash (kpph)	3.93	3.61	4.04	5.17
Al_2O_3 in lime slurry (kpph)	0.015	0.019	0.02	0.015
Al_2O_3, input (kpph)	3.94	3.63	4.06	5.19
Al_2O_3 in bottom ash (kpph)	0.67	0.61	0.6	0.76
Al_2O_3 in baghouse hopper ash (kpph)	3.15	2.48	3.34	3.79
Al_2O_3, output (kpph)	3.83	3.09	3.94	4.55
Al_2O_3 material balance closure	97%	85%	97%	88%
Average Al_2O_3 Material Balance	92%			

Sensitivity of Ca/S Ratio on Material Balance Closure

The largest uncertaintyin the material balance calculations is the assumed Ca/S ratio. The impact of Ca/S ratio on the material balance closure for Hg, SiO_2, and Al_2O_3 can be determined by calculating the mercury balance at other Ca/S ratios. Summarized in Tables 24 and 25 are the results of the material balance closure calculations for Hg, SiO_2, and Al_2O_3 at Ca/S ratios of 2 and 1.7, respectively. The mercury material balance closure using Ca/S ratio of 2.0 is 98%, and using Ca/S ratio of 1.7 is 95%. Thus, the balances for single tests are in the 70-130% range and the average values are in the 80-120% range. This indicates that a variation of Ca/S ratio from 2.2 to 1.7 is inconsequential on the material balance closure.

This finding is not surprising. The plant burned low sulfur coal (coal sulfur content of about one percent) and, thus, the amount of lime needed to bring SO_2 emissions into compliance is small compared to the coal feed rate (the major source of mercury into

the plant) and the baghouse ash production rate (the major source of mercury leaving the plant). A variation of Ca/S ratio from 2.2 to 1.7 does not substantially change the flow rate of mercury entering with the lime slurry coming into the plant, nor does it substantially change the calculated flow rate of mercury leaving with the baghouse ash.

Table 24. Material balance closure for Hg, SiO_2, and Al_2O_3 at Ca/S ratio of 2.0

Hg input from Coal (lb/hr)	1.06E-02	1.74E-02	1.48E-02	1.50E-02
Hg input from lime slurry (lb/hr)	1.18E-04	1.55E-04	1.60E-04	1.26E-04
Total Hg input (lb/hr)	1.07E-02	1.76E-02	1.50E-02	1.51E-02
Hg output from Bottom Ash (lb/hr)	9.71E-04	1.47E-03	1.96E-03	2.28E-03
Hg output from baghouse hopper ash (lb/hr)	8.53E-03	1.19E-02	1.31E-02	9.39E-03
Hg output via stack flue gas (lb/hr)	1.90E-03	1.90E-03	1.67E-03	1.59E-03
Total Hg output (lb/hr)	1.14E-02	1.52E-02	1.67E-02	1.33E-02
Hg material balance closure	107%	87%	112%	88%
Average Hg material balance closure	98%			
SiO_2 input from Coal (kpph)	7.86	7.61	8.39	10.56
SiO_2 input from slurry (kpph)	0.05	0.06	0.06	0.05
Total SiO_2 input (kpph)	7.91	7.68	8.45	10.61
SiO_2 output via bottom ash (kpph)	1.55	1.6	1.64	1.69
SiO_2 output via baghouse hopper ash (kpph)	6.44	5.03	6.76	8.15
Total SiO_2 output (kpph)	7.99	6.63	8.4	9.84
SiO_2 material balance closure	101%	86%	99%	93%
Average SiO_2 material balance closure	95%			
Al_2O_3 input from Coal (kpph)	3.93	3.61	4.04	5.17
Al_2O_3 input from slurry (kpph)	0.014	0.017	0.018	0.013
Total Al_2O_3 input (kpph)	3.94	3.63	4.06	5.18
Al_2O_3 output via bottom ash (kpph)	0.67	0.61	0.6	0.76
Al_2O_3 output via baghouse hopper ash (kpph)	3.07	2.4	3.24	3.71
Total Al_2O_3 output (kpph)	3.75	3.02	3.84	4.46
Al_2O_3 material balance closure	95%	83%	95%	86%
Average Al_2O_3 material balance closure	90%			

Table 25. Material balance closure for Hg, SiO2, and Al2O3 at Ca/S ratio of 1.7

Hg input from Coal (lb/hr)	1.06E-02	1.74E-02	1.48E-02	1.50E-02
Hg input from lime slurry (lb/hr)	1.01E-04	1.32E-04	1.36E-04	1.07E-04
Total Hg input (lb/hr)	1.07E-02	1.75E-02	1.50E-02	1.51E-02
Hg output from Bottom Ash (lb/hr)	9.71E-04	1.47E-03	1.96E-03	2.28E-03
Hg output from baghouse hopper ash (lb/hr)	8.18E-03	1.13E-02	1.25E-02	9.07E-03
Hg output via stack flue gas (lb/hr)	1.90E-03	1.90E-03	1.67E-03	1.59E-03
Total Hg output (lb/hr)	1.11E-02	1.47E-02	1.61E-02	1.29E-02
Hg material balance closure	104%	84%	108%	86%
Average Hg material balance closure	95%			
SiO_2 input from Coal (kpph)	7.86	7.61	8.39	10.56
SiO_2 input from slurry (kpph)	0.04	0.05	0.05	0.04
Total SiO_2 input (kpph)	7.9	7.67	8.44	10.6
SiO_2 output via bottom ash (kpph)	1.55	1.6	1.64	1.69
SiO_2 output via baghouse hopper ash (kpph)	6.18	4.78	6.45	7.87
Total SiO_2 output (kpph)	7.73	6.38	8.09	9.56
SiO_2 material balance closure	98%	83%	96%	90%
Average SiO_2 material balance closure	92%			
Al_2O_3 input from Coal (kpph)	3.93	3.61	4.04	5.17
Al_2O_3 input from slurry (kpph)	0.012	0.015	0.015	0.011
Total Al_2O_3 input (kpph)	3.94	3.62	4.05	5.18
Al_2O_3 output via bottom ash (kpph)	0.67	0.61	0.6	0.76
Al_2O_3 output via baghouse hopper ash (kpph)	2.95	2.28	3.1	3.58
Total Al_2O_3 output (kpph)	3.62	2.9	3.69	4.33
Al_2O_3 material balance closure	92%	80%	91%	84%
Average Al_2O_3 material balance closure	87%			

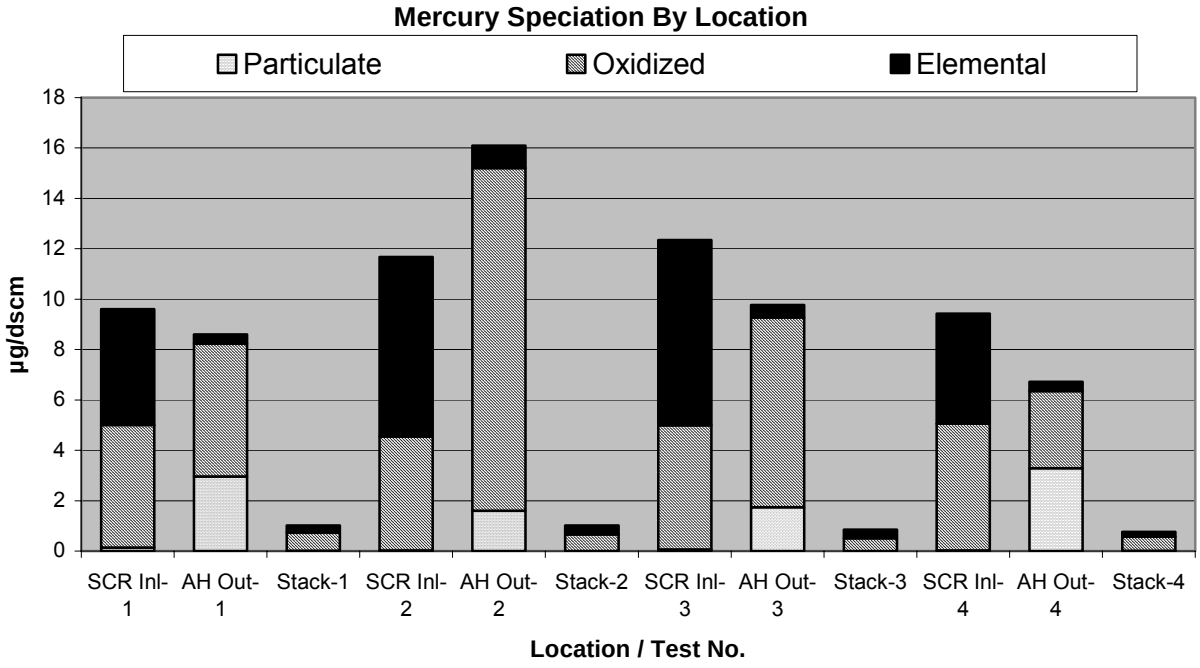

Figure 1. Mercury Speciation

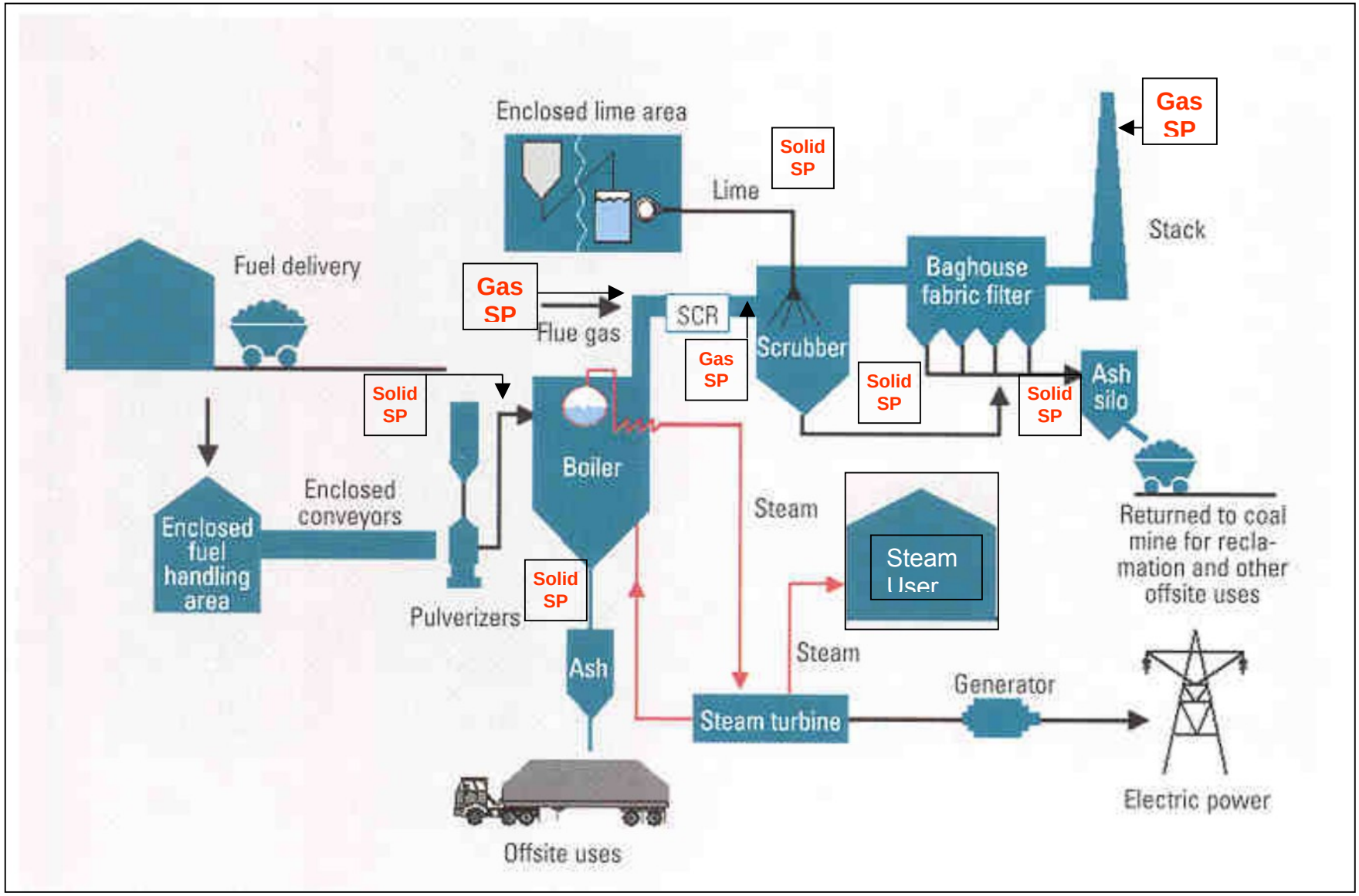

Figure 2. Plant 1 Process Flow Schematic.

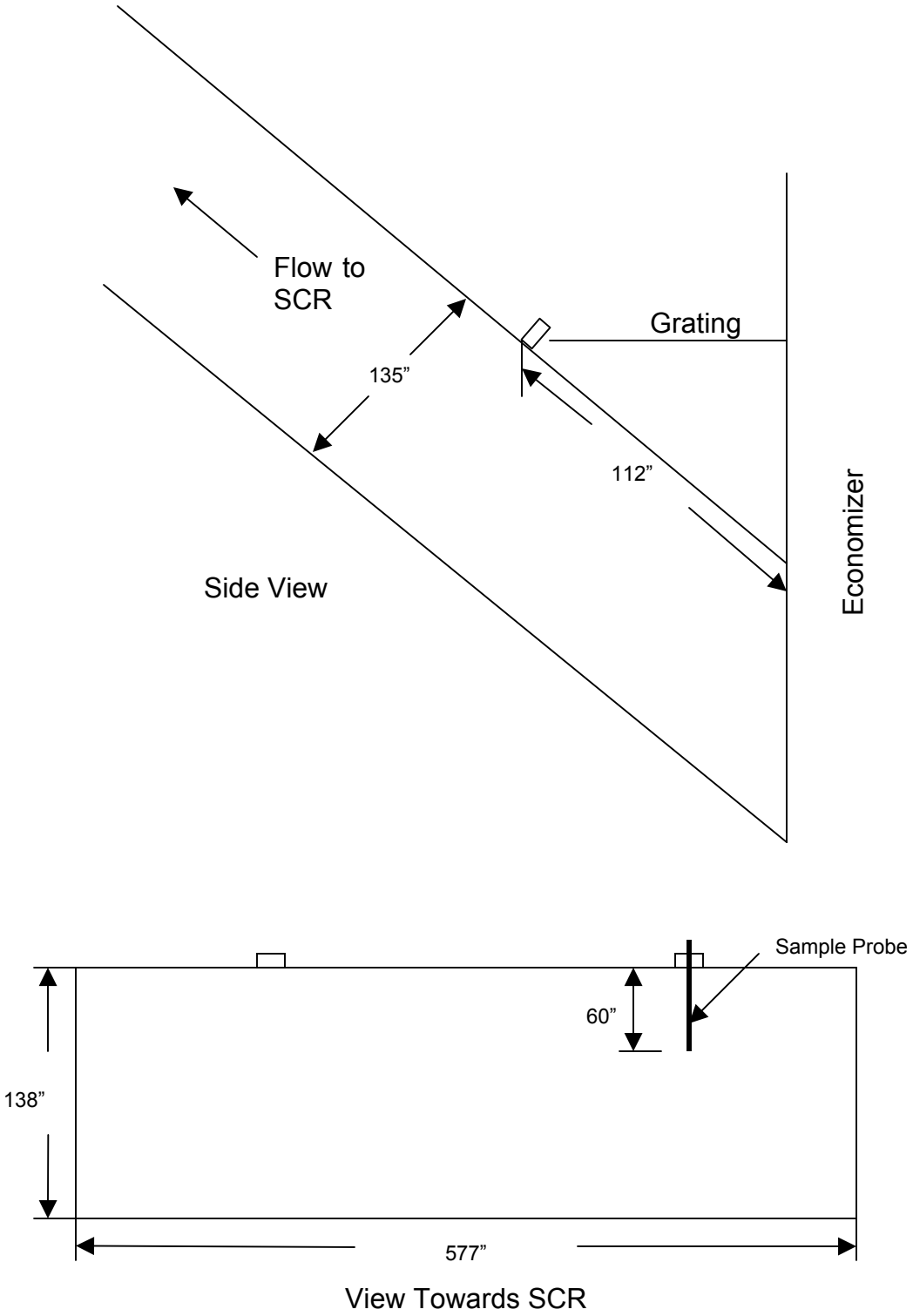

Figure 3. SCR Inlet Sampling Location

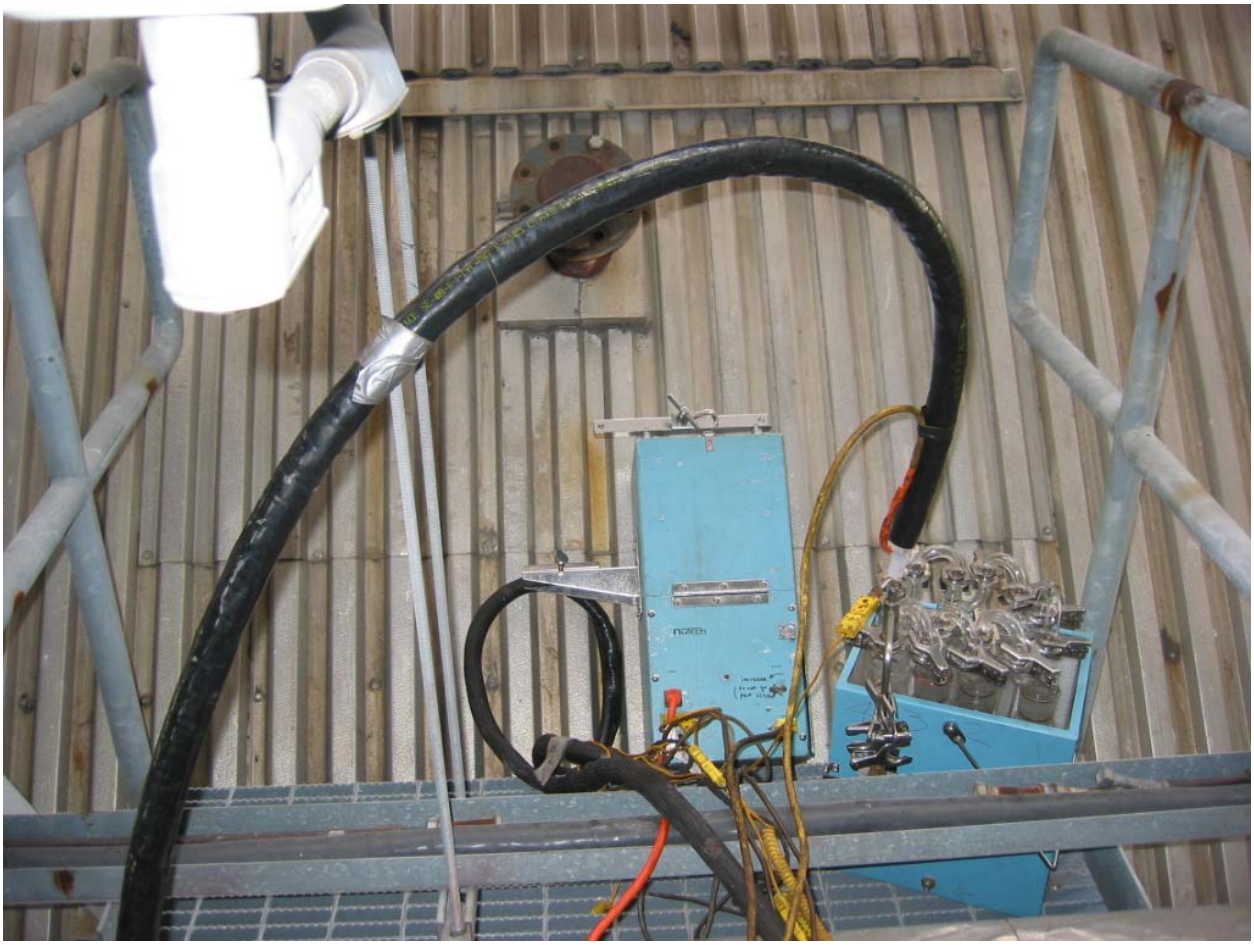

Figure 4. SCR Inlet Hg Sampling Train.

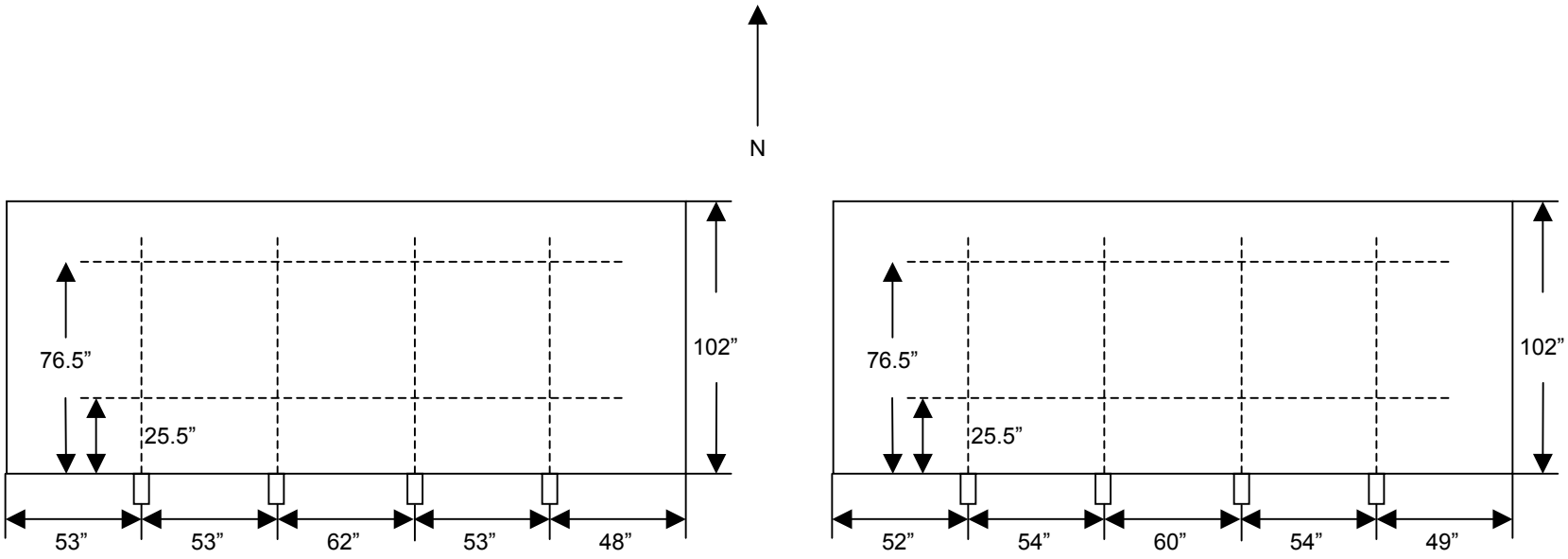

Figure 5. Air Heater Outlet Sampling Location.

Figure 6. Air Heater Outlet Hg Sampling Train.

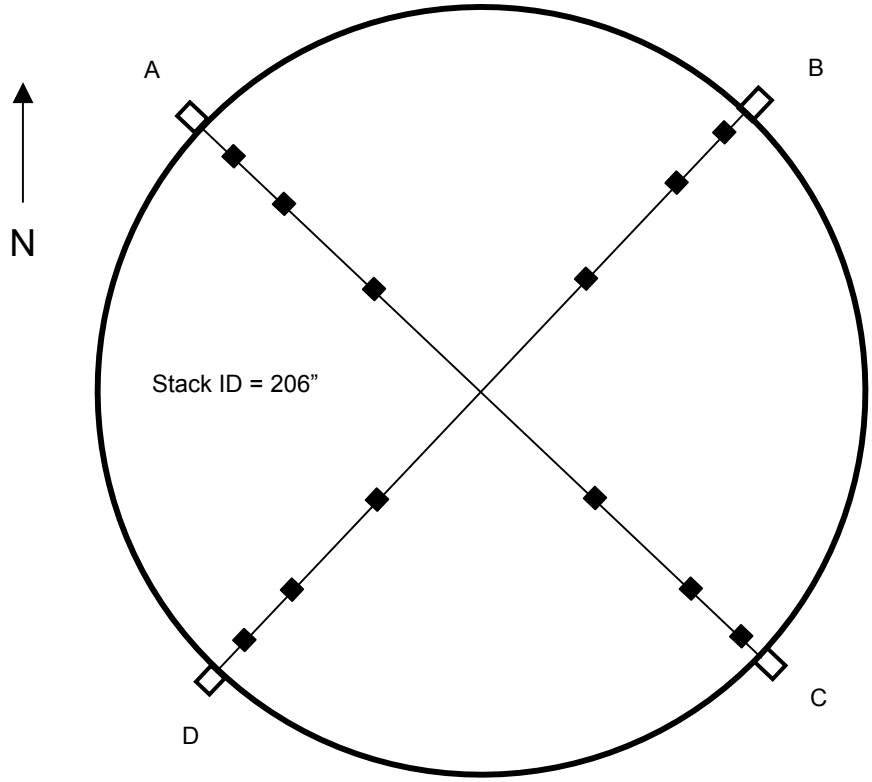

Traverse Point	Location (in.)
1	9.1
2	30.1
3	61.0

4 Sample Access Ports
3 Sample Points Per Port
12 Total Sample Points

Figure 7. Stack Sampling Location

Figure 8. Stack Hg Sampling Train.

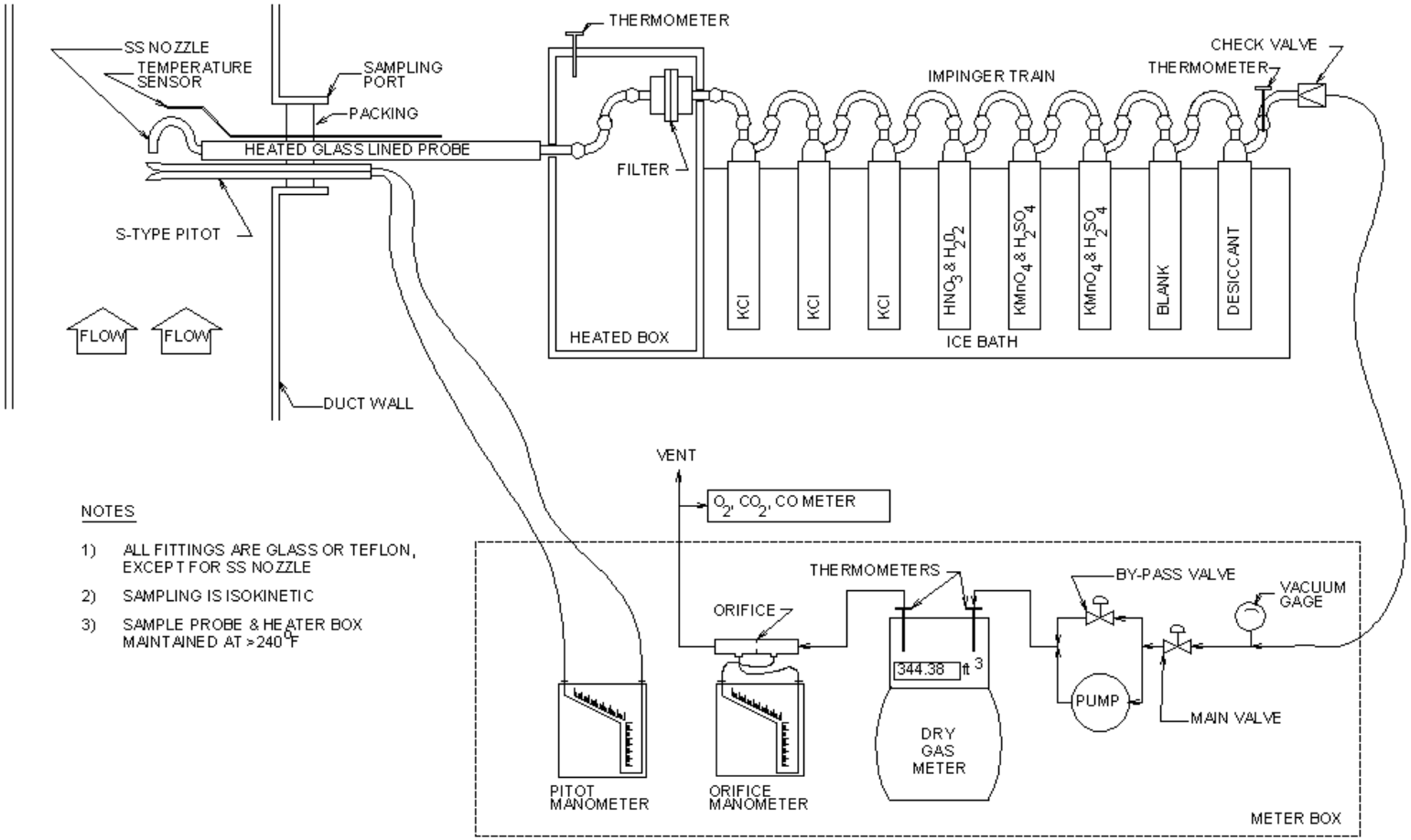

Figure 9. Ontario-Hydro Sampling Train Schematic.

Figure 10. Coal Sampling port.

Figure 11. Coal Sampling buckets.

Figure 12. Collecting coal sample.

Figure 13. Bottom Ash Sampling Location.

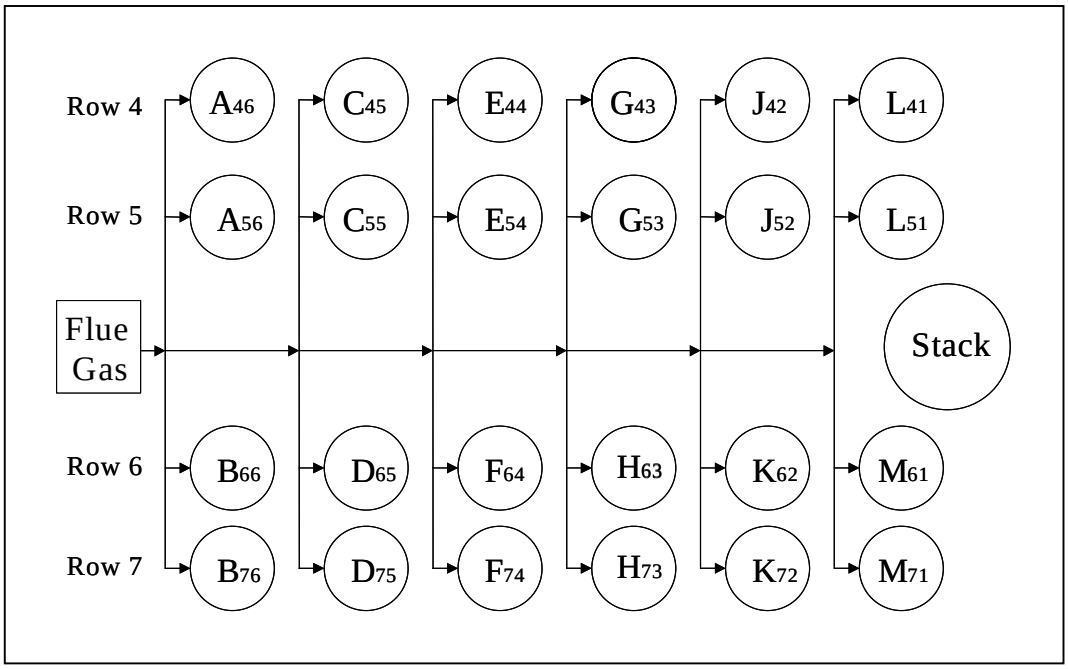

Figure 14. Arrangement of Baghouse Hoppers.

Figure 15. Baghouse Hopper Ash Sampling Port.

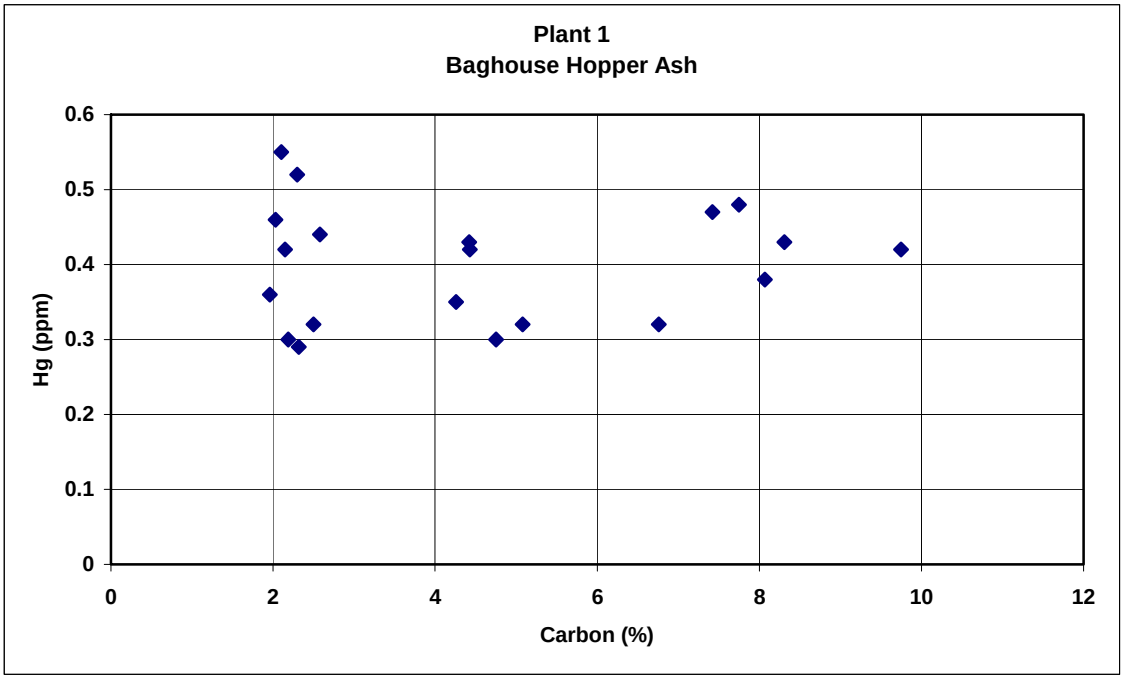

Figure 16. Hg concentration vs. carbon content in baghouse hopper ash samples.

APPENDIX A

Mercury Sampling Data

- Field Data Sheets
- Mercury Measurement Data Sheets

APPENDIX B

Plant 1 Process Data

APPENDIX C

Flue Gas Hg Data

- Summary of Ontario-Hydro Impinger Analyses Data Sheets
- Recovery Data Sheets

APPENDIX D

Process Material Data

- Coal Analysis Data Sheets
- Ash Analysis Data Sheets

APPENDIX A

Mercury Sampling Data

- Field Data Sheets
- Mercury Measurement Data Sheets

TEST 1

ONTARIO HYDRO Hg SAMPLING AND SPECIATION FIELD DATA SHEET

Page 1 of 1

PLANT	PLANT NO. 1
LOCATION	SCR Inlet — 3 in
DUCT DIMENSIONS	
DUCT AREA	
DATE	3-4, 2003
TIME	1414 - 1554
IMPINGER BOX	
METER BOX	2-3
PITOT TUBE DESC	E-3

AMBIENT TEMP [°F]	91
BAROMETRIC PRESSURE [" Hg]	29.74
%H_2O (Assumed)	8%
PROBE LENGTH [ft]	5'
NOZZLE ID [inch]	0.212
CALIBRATION FACTORS: delta H	1.917
Y	1.014
C(p)	0.84 0.81
K	~~0.777~~ 0.997

Tm 90°F
Ts 650°F
O2 6% Bws 8%
CO2 13% Pb 29.84

HEATER BOX SETTING	NA
PROBE HTR SETTING	325
DUCT X-SECTION	circ ? / rect ? / other:
Dry Mole Wt (Assumed)	
Wet Mole Wt (Assumed)	
OPERATOR(S)	J.L. & B.S.

Test ID: SCR-IN-1

101.2 - 3 gm H_2O
9.1648 gm

TRAVERSE POINT [port-inch]	SAMPLE TIME [minute]	STATIC PRES [" H_2O]	STACK TEMP [°F]	PITOT HEAD [" H_2O]	METER DIFF PRES SETTING [" H_2O]	METER READING [ft^3]	METER TEMP [°F] inlet	METER TEMP [°F] outlet	FILTER BOX [°F]	PROBE TEMP [°F]	LAST IMP TEMP [°F]	METER VACUUM [" Hg]	METER EXHAUST O_2 [% vol]	METER EXHAUST CO_2 [% vol]
						501.570								
B-1	0 - 10	-4.0	601	0.80	0.80	506.570	96	96	NA	272	67	4.0	4.8	15.3
	10 - 20		636	0.85	0.85	511.32	97	96		298	67	4.5	4.9	15.2
	20 - 30		639	0.85	0.85	516.32	100	98		306	68	5.0	5.3	14.9
	30 - 40		640	0.85	0.85	521.00	102	98		315	67	6.0	5.2	14.9
	40 - 50		640	0.83	0.83	525.748	103	99		322	68	7.0	4.8	15.2
	50 - 60		641	0.82	0.82	530.468	104	99		323	65	8.0	5.2	14.8
	60 - 70	-4.0	640	0.80	0.80	535.125	104	101		324	65	9.0	5.0	15.1
	70 - 80		643	0.80	0.80	539.752	105	101		309	67	10.0	4.6	15.5
1554	80 - 90		644	0.85	0.85	544.570	105	101		322	65	12.5	4.9	15.6
End Test	90 - 100		643	0.82	0.82	549.225	105	102		322	66	15.0	5.0	15.2
	100 - 110													
	110 - 120			PMS 0.827										
AVERAGE	100	-4.0	639.7	~~0.827~~	0.827	47.655	106.7						4.99	15.17

Pre-Leak Check: 0.003 ft^3 @ 10.0 "Hg

~~Pre~~-Leak Check: 0.016 ft^3 @ 18 "Hg
Post

NOTE: Purge for 10 minutes at end of sampling. Post check 1 5 = 5 Pre
1 5 = 5 Post

TEST 1

ONTARIO HYDRO Hg SAMPLING AND SPECIATION FIELD DATA SHEET

EAST A B C D WEST A B C D

Page 1 of 1

PLANT	PLANT NO. 1	AMBIENT TEMP [°F]	81	HEATER BOX SETTING	
LOCATION	Air Heater Outlet - Jeff	BAROMETRIC PRESSURE [" Hg]	29.75	PROBE HTR SETTING	Test ID:
DUCT DIMENSIONS		%H_2O (Assumed)	7.0	DUCT X-SECTION	circ ? / rect ? / other:
DUCT AREA		PROBE LENGTH [ft]	8'		
DATE	, 2003	NOZZLE ID [inch]	0.250	Dry Mole Wt (Assumed)	
TIME	3/4/03	CALIBRATION FACTORS: delta H	1.999	Wet Mole Wt (Assumed)	
IMPINGER BOX		Y	1.015		
METER BOX	N-5	C(p)	0.8000		
PITOT TUBE DESC	E-5	K	3.11	OPERATOR(S)	JAW JCS

76.6 - 3 gm H_2O

6.2022 gm

TRAVERSE POINT [port-inch]	SAMPLE TIME [minute]	STATIC PRES [" H_2O]	STACK TEMP (1) [°F]	PITOT HEAD [" H_2O]	METER DIFF PRES SETTING [" H_2O]	METER READING [ft³]	METER TEMP [°F] inlet (6)	METER TEMP [°F] outlet (7)	FILTER BOX (3) [°F]	PROBE TEMP (2) [°F]	LAST IMP TEMP (4) [°F]	METER VACUUM [" Hg]	METER EXHAUST O_2 [% vol]	METER EXHAUST CO_2 [% vol]	
						~~013.98~~									O_2 cal check
W-A-25.5"	0-5		276	0.09	0.78	017.61	86	89	257	189	71	1.0	—	—	
W-A-76.5"	5-10		233	0.13	0.40	019.35	87	90	266	187	70	1.0	~~16.6~~		
W-B-25.5"	10-15		224	0.05	0.16	020.10 LC 021.30	89	91	269	197	75	1.0	~~8.4~~		
W-B-76.5"	15-20		242	0.15	0.47	023.03	90	92	267	193	71	1.0	6.8		
W-C-25.5"	20-25		236	0.12	0.38	023.82 LC 025.57	92	93	267	203	69	1.5	6.3	13.3	
W-C-76.5"	25-30	-8.193	251	0.18	0.56	027.55	93	93	267	198	68	2.0	5.9	14.2	
W-D-25.5"	30-35		240	0.11	0.35	028.30 LC 030.10	93	94	265	203	69	2.0	6.1	14.0	20.9 OK
W-D-76.5"	35-40		256	0.18	0.56	032.03	94	93	264	196	68	2.0	5.4	14.7	
				~~0.33~~	~~1.05~~	032.75 LC									
E-A-25.5"	40-45		257	0.33	1.05	035.45	94	94	261	191	60	3.5	6.2	14.0	
E-A-76.5"	45-50	-9.210	275	0.59	1.85	038.84	98	94	263	195	54	6.0	5.4	14.2	
E-B-25.5"	50-55		266	0.42	1.30	040.80 LC 043.59	98	95	257	187	59	5.0	6.2	14.0	
E-B-76.5"	55-60	-9.638	282	0.55	1.70	046.93	99	95	265	190	59	6.5	5.8	14.3	
E-C-25.5"	60-65		270	0.30	0.94	048.40 LC 050.06	94	98	260	182	57	4.0	6.3	13.9	
E-C-76.5"	65-70		285	0.60	1.90	053.59	100	95	265	188	54	8.5	5.5	14.6	21.0 OK
E-D-25.5"	70-75	-9.388	275	0.39	1.20	054.50 LC 057.38	98	95	257	182	57	5.5	6.2	14.0	
E-D-76.5"	75-80		285	0.58	1.80	060.30	100	95	265	186	57	9.0	6.4	13.8	
AVERAGE	80	~~-9.00~~	256.4	0.265	0.931	~~39.35~~	93.8						6.08	14.08	

Pre-Leak Check: DEAD START ft³ @ -12 "Hg 38.135 — 9.23

Pre-Leak Check: DEAD START ft³ @ -15 "Hg

NOTE: Purge for 10 minutes at end of sampling.

Pitot leak check - OK

Pitot leak check OK

TEST 1

170 MegW

ONTARIO HYDRO Hg SAMPLING AND SPECIATION FIELD DATA SHEET

Page _____ of _____

PLANT	PLANT NO. 1
LOCATION	Stack
DUCT DIMENSIONS	206"
DUCT AREA	231.41 ft²
DATE	3/4, 2003
TIME	1415-1640
IMPINGER BOX	
METER BOX	NC-4
PITOT TUBE DESC	#-1A

AMBIENT TEMP [°F]	
BAROMETRIC PRESSURE [" Hg]	29.75
%H_2O (Assumed)	11.5
PROBE LENGTH [ft]	8'
NOZZLE ID [inch]	0.215
CALIBRATION FACTORS: delta H	1.881
Y	0.978
C(p)	0.857
K	1.77

HEATER BOX SETTING			
PROBE HTR SETTING		Test ID: _____	
DUCT X-SECTION	circ ?	rect ?	other:
Dry Mole Wt (Assumed)			
Wet Mole Wt (Assumed)			

OPERATOR(S) Mr Ron Oda, KC

184.1 ft³ H_2O

0.0021 gm

TRAVERSE POINT [port-inch]	SAMPLE TIME [minute]	STATIC PRES [" H_2O]	STACK TEMP [°F] (1)	PITOT HEAD [" H_2O] Δp	METER DIFF PRES SETTING [" H_2O] ΔH	METER READING [ft³]	METER TEMP [°F] (6) inlet	METER TEMP [°F] (5) outlet	FILTER BOX [°F] (3)	PROBE TEMP [°F] (2)	LAST IMP TEMP [°F] (4)	METER VACUUM [" Hg]	METER EXHAUST O_2 [% vol]	METER EXHAUST CO_2 [% vol]
						970.80								
SW-9"	0-10		193	0.60	1.10	1023.90 ~~29.82~~	96	90	252	249	66	4.0	7.2	13.0
SW-30"	10-20		193	0.65	1.15	1035.84	96	90	248	249	66	4.0	7.4	12.9
SW-61"	20-30		193	0.67	1.20	1041.95	96	90	255	249	68	4.0	7.2	13.0
						006.40								
NW-9"	30-40		192	0.50	0.90	011.75	96	90	247	251	66	3.0	7.2	13.0
NW-30"	40-50	-0.67	193	0.60	1.10	017.58	96	90	252	245	68	4.0	7.3	12.9
NW-61"	50-60		193	0.64	1.15	023.60	98	90	255	245	64	4.0	7.2	13.0
						989.90								
NE-9"	60-70		192	0.51	0.90	994.25	94	89	257	246	63	3.0	7.0	13.1
NE-30"	70-80		193	0.61	1.10	000.15	96	90	251	246	57	4.0	7.0	13.2
NE-61"	80-90	-0.74	193	0.61	1.10	006.09	97	90	251	242	61	4.0	7.0	13.2
SE-9"	90-100		193	0.56	0.99	976.50	89	86	251	246	63	3.5	7.0	13.2
SE-30"	100-110		193	0.65	1.15	982.55	87	92	246	246	63	4.0	7.1	13.1
SE-61"	110-120		193	0.67	1.20	988.68	95	89	250	244	65	4.0	6.9	13.2
AVERAGE	120	-0.71	192.8	~~[illegible]~~	1.087	977.04	~~[illegible]~~						7.13	13.07

Pre-Leak Check: <0.01 ft³ @ 8 "Hg (70.32) (92.13)

Post Pre-Leak Check: <0.01 ft³ @ 8 "Hg

NOTE: Purge for 10 minutes at end of sampling. (0.60)

10 min purge after test

pre test pitot OK @ 8" H_2O

post test pitot OK @ 9" H_2O

FG41 2

ONTARIO HYDRO Hg SAMPLING AND SPECIATION FIELD DATA SHEET

PLANT	PLANT NO. 1
LOCATION	SCR Inlet Jim
DUCT DIMENSIONS	
DUCT AREA	
DATE	3/6/2003
TIME	10:26:30 – 10:51:30
IMPINGER BOX	Jim Inlet
METER BOX	N-3
PITOT TUBE DESC	E-3

AMBIENT TEMP [°F]	88
BAROMETRIC PRESSURE [" Hg]	29.77
%H_2O (Assumed)	9.5
PROBE LENGTH [ft]	5'
NOZZLE ID [inch]	0.212
CALIBRATION FACTORS: delta H	1.917
Y	1.014
C(p)	~~0.84~~ 0.811
K	0.9997

T_s - 630
T_m - 100

HEATER BOX SETTING	NA
PROBE HTR SETTING	325
DUCT X-SECTION	circ ? / rect ? / other: Filter #3
Dry Mole Wt (Assumed)	
Wet Mole Wt (Assumed)	
OPERATOR(S)	JEL BPS

Test ID: SCR-IN-2

106.5 – H_2O
9.4018 gm

TRAVERSE POINT [port-inch]	SAMPLE TIME [minute]	STATIC PRES [" H_2O]	STACK TEMP [°F]	PITOT HEAD [" H_2O]	METER DIFF PRES SETTING [" H_2O]	METER READING [ft^3]	METER TEMP [°F] inlet	METER TEMP [°F] outlet	FILTER BOX [°F]	PROBE TEMP [°F]	LAST IMP TEMP [°F]	METER VACUUM [" Hg]	METER EXHAUST O_2 [% vol]	METER EXHAUST CO_2 [% vol]
						555.300								
* Top-B-1	0 - 10	-3.5	629	0.95	0.95	560.892	92	90	NA	265	68	5.0	5.2	15.0
	10 - 20		638	0.90	0.90	565.826	93	91		279	68	5.0	5.2	14.9
	20 - 30	-2.5	640	0.95	0.95	570.705	97	93		292	68	6.0	4.6	15.6
	30 - 40		640	0.95	0.95	575.727	99	94		308	68	7.0	5.0	15.2
	40 - 50	-3.1	639	0.95	0.95	580.730	99	95		290	68	9.0	4.8	15.3
	50 - 60		636	0.95	0.95	585.717	100	95		282	68	10.0	5.1	15.0
	60 - 70	-3.1	636	0.93	0.93	590.690	102	98		298	68	13.0	4.9	15.2
	70 - 80		636	0.95	0.95	595.685	101	98		298	65	15.0	4.8	15.2
End Test	80 - 90	-3.1	633	0.95	0.95	600.668	101	98		294	66	18.0	5.1	15.0
	90 - 100											Vac @		
	100 - 110											21 "Hg		
	110 - 120													
				0.942									4.97	15.16
AVERAGE	90	-3.1	636.3	~~0.971~~	0.942	44.868	96.4						5.0	15.2

Pre-Leak Check: 0.008 ft^3 @ 10.0 "Hg

~~Pre~~ Post-Leak Check: 0.012 ft^3 @ 22.0 "Hg

NOTE: Purge for 10 minutes at end of sampling. Pre P.tot +: OK @ 4.7" -: OK @ 5.0"
Post P.tot +: OK @ 3.5" -: OK @ 5.0"

TEST 2

ONTARIO HYDRO Hg SAMPLING AND SPECIATION FIELD DATA SHEET

Page 1 of 1

PLANT	PLANT NO. 1	AMBIENT TEMP [°F]	80	HEATER BOX SETTING	
LOCATION	Air Heater Outlet – 3rd	BAROMETRIC PRESSURE [" Hg]	29.77	PROBE HTR SETTING	Test ID:
DUCT DIMENSIONS		%H_2O (Assumed)	8.7%	DUCT X-SECTION	circ ? / rect ? / other:
DUCT AREA		PROBE LENGTH [ft]	8'		
DATE	3/6 , 2003	NOZZLE ID [inch]	0.194	Dry Mole Wt (Assumed)	
TIME	10:18 - 12:24	CALIBRATION FACTORS: delta H	1.999	Wet Mole Wt (Assumed)	
IMPINGER BOX	Filter #4	Y	1.015		
METER BOX	RJ-5	C(p)	~~0.840~~ 0.800		
PITOT TUBE DESC	E-5	K	1.09	OPERATOR(S)	JAW / JCS

69.7 ft³ H_2O
6.0893 gm

TRAVERSE POINT [port-inch]	SAMPLE TIME [minute]	STATIC PRES [" H_2O]	STACK TEMP (1) [°F]	PITOT HEAD [" H_2O]	METER DIFF PRES SETTING [" H_2O]	METER READING [ft³]	METER TEMP (2) [°F] inlet	METER TEMP (2) [°F] outlet	FILTER BOX (3) [°F]	PROBE TEMP (2) [°F]	LAST IMP TEMP (4) [°F]	METER VACUUM [" Hg]	METER EXHAUST O_2 [% vol]	METER EXHAUST CO_2 [% vol]	
						071.90									
Fast W-A-25.5"	0-6 ~~0-5~~		200	0.0	0.05	072.28	87	92	260	216	65	1.0	10.8	9.6	O_2 cal check
W-A-76.5"	6-12 ~~5-10~~		217	0.0	0.05	073.00	89	93	259	213	66	1.0	10.4	10.0	20.8 OK
W-B-25.5"	12-18 ~~10-15~~		193	0.0	0.05	074.10 074.88	90	94	262	220	68	1.0	12.6	8.0	
W-B-76.5"	18-24 ~~15-20~~		216	0.0	0.05	075.70	91	94	261	215	68	1.0	10.6	9.8	
W-C-25.5"	24-30 ~~20-25~~		190	0.0	0.05	076.30 077.10	92	95	262	227	68	1.0	13.1	7.4	
W-C-76.5"	30-36 ~~25-30~~		217	0.0	0.05	078.07	93	96	261	224	68	1.0	10.7	9.7	
W-D-25.5"	36-42 ~~30-35~~	-0.034	197	0.0	0.05	078.75 079.55	95	97	260	220	71	1.0	12.9	7.7	
Fast W-D-76.5"	42-48 ~~35-40~~		222	0.0	0.05	080.39	94	95	260	200	66	1.0	10.6	9.8	
						081.05									
Med E-A-25.5"	48-54 ~~40-45~~		255	0.80	0.90	084.20	95	93	263	209	51	2.5	6.6	13.6	21.3 Recal
E-A-76.5"	54-60 ~~45-50~~		270	1.10	1.20	087.50	98	94	263	210	48	3.5	6.5	13.7	
E-B-25.5"	60-66 ~~50-55~~		259	0.95	1.00	088.30 089.33	98	95	261	201	51	3.5	6.7	13.5	
E-B-76.5"	66-72 ~~55-60~~	-0.03	275	1.30	1.40	095.24	101	96	262	214	50	5.0	5.8	14.4	
E-C-25.5"	72-78 ~~60-65~~		265	0.75	0.82	098.20 099.10	99	95	260	197	54	3.0	6.9	13.3	21.0 OK
E-C-76.5"	78-84 ~~65-70~~		287	1.30	1.40	102.89	100	95	262	204	52	5.0	5.5	14.6	
E-D-25.5"	84-90 ~~70-75~~		278	0.85	0.93	103.50 106.60	99	95	261	211	54	4.5	6.5	13.7	
Fast E-D-76.5"	90-96 ~~75-80~~		290	1.20	1.30	110.19	101	95	263	204	62	6.5	6.2	14.0	20.8 OK
AVERAGE	96	-0.032	239.5	~~0.75~~	0.582	33.48	94.875						8.40	11.425	

Pre-Leak Check: 0.040 ft³ @ -10 "Hg

Pre-Leak Check: 0.040 ft³ @ -12 "Hg

NOTE: Purge for 10 minutes at end of sampling.

Pitot leak test OK

ONTARIO HYDRO Hg SAMPLING AND SPECIATION FIELD DATA SHEET

$O_2 = 7.13$
$CO_2 = 13.1$
$\phi = 0.25$

Page _____ of _____

PLANT	PLANT NO. 1	AMBIENT TEMP [°F]		HEATER BOX SETTING	
LOCATION	Stack	BAROMETRIC PRESSURE [" Hg]	28.77	PROBE HTR SETTING	
DUCT DIMENSIONS	206"	%H_2O (Assumed)	11.3	DUCT X-SECTION	circ ? / rect ? / other:
DUCT AREA	231.41 ft^2	PROBE LENGTH [ft]	8'		
DATE	, 2003	NOZZLE ID [inch]	0.215	Dry Mole Wt (Assumed)	
TIME	10:23 – 15:25	CALIBRATION FACTORS: delta H	1.881	Wet Mole Wt (Assumed)	
IMPINGER BOX		Y	0.978		
METER BOX		C(p)	0.837		
PITOT TUBE DESC		K	1.73	OPERATOR(S)	

Test ID: _____

TRAVERSE POINT [port-inch]	SAMPLE TIME [minute]	STATIC PRES [" H_2O]	STACK TEMP [°F]	PITOT HEAD [" H_2O]	METER DIFF PRES SETTING [" H_2O]	METER READING [ft^3]	METER TEMP [°F] inlet	METER TEMP [°F] outlet	FILTER BOX [°F]	PROBE TEMP [°F]	LAST IMP TEMP [°F]	METER VACUUM [" Hg]	METER EXHAUST O_2 [% vol]	METER EXHAUST CO_2 [% vol]
						57.60								
SW-9"	0-10	1.	191	.57	1.00	57.30	95	90	245	249	60	3.5	7.0	13.1
SW-30"	10-20		191	.72	1.25	63.49	98	90	251	246	57	4.0	7.0	13.1
SW-61"	20-30	1.80	191	.68	1.26	69.72	98	90	255	249	57	4.0	7.0	13.2
NW-9"	30-40		191	0.58	1.00	75.70	96	90	230	248	61	3.5	7.1	13.1
NW-30"	40-50		191	0.67	1.18	81.62	98	90	230	249	61	4.0	7.0	13.2
NW-61"	50-60	[illegible]	191	[illegible]	[illegible]	87.72	99	92	248	255	61	4.0	6.9	13.3
NE-9"	60-70		190	0.54	1.00	93.72	98	91	238	250	65	4.0	6.9	13.3
NE-30"	70-80		191	0.65	1.10	99.60	99	92	240	252	65	4.0	7.1	13.2
NE-61"	80-90		191	.70	1.20	105.72	100	92	254	252	65	4.0	6.8	13.4
						[illegible]		[illegible]	[illegible]	[illegible]	[illegible]	[illegible]	[illegible]	[illegible]
SE-9"	90-100		191	.64	1.10	120.50	98	93	249	248	72	4.0	7.0	13.2
SE-30"	100-110		191	.70	1.20	126.72	101	93	254	254	65	4.0	6.9	13.3
SE-61"	110-120		191	.70	1.20	132.78	101	93	254	248	65	4.0	6.8	13.4
AVERAGE	[illegible]	[illegible]	191	[illegible]	1.136	[illegible]	[illegible]	[illegible]					6.96	13.2

Pre-Leak Check: [illegible] ft^3 @ [illegible] "Hg

Pre-Leak Check: [illegible] ft^3 @ [illegible] "Hg

NOTE: Purge for 10 minutes at end of sampling.

TEST 3

ONTARIO HYDRO Hg SAMPLING AND SPECIATION FIELD DATA SHEET

PLANT	PLANT NO. 1
LOCATION	SCR Inlet - Jim
DUCT DIMENSIONS	
DUCT AREA	
DATE	, 2003
TIME	1418 - 1630
IMPINGER BOX	JM Inlet
METER BOX	N-3
PITOT TUBE DESC	E-3

AMBIENT TEMP [°F]	98
BAROMETRIC PRESSURE [" Hg]	29.75
%H_2O (Assumed)	9.5
PROBE LENGTH [ft]	5'
NOZZLE ID [inch]	0.212
CALIBRATION FACTORS: delta H	1.917
Y	1.014
C(p)	~~0.840~~ 0.811
K	0.9997

HEATER BOX SETTING	NA		
PROBE HTR SETTING	325	Test ID: SCR-in-3	
DUCT X-SECTION	circ ?	rect ?	other: F.H2 #5
Dry Mole Wt (Assumed)			
Wet Mole Wt (Assumed)			
OPERATOR(S)	JEL BPS		

146.2 ft^3 H_2O
14,6575 gm

TRAVERSE POINT [port-inch]	SAMPLE TIME [minute]	STATIC PRES [" H_2O]	STACK TEMP [°F]	PITOT HEAD [" H_2O]	METER DIFF PRES SETTING [" H_2O]	METER READING [ft^3]	METER TEMP [°F] inlet	METER TEMP [°F] outlet	FILTER BOX [°F]	PROBE TEMP [°F]	LAST IMP TEMP [°F]	METER VACUUM [" Hg]	METER EXHAUST CO_2 [% vol]	METER EXHAUST O_2 [% vol]
						607.000								
Top B1	0 - 10		622	1.10	1.10	612.39	100	100	NA	276	83	5	15.0	4.8
	10 - 20		623	1.10	1.10	617.74	102	100		298	71	6	14.9	5.2
	20 - 30		625	1.10	1.10	623.14	104	100		299	69	8	14.8	5.3
3.5	30 - 40		622	1.10	1.10	628.48	104	100		308	66	10	15.0	5.1
	40 - 50		629	1.10	1.10	633.87	105	101		317	67	12	14.8	5.3
	50 - 60		625	1.10	1.10	639.11	105	101		312	70	14	15.0	5.1
STOP 1328	60 - 70	[illegible]	630	1.10	1.10	644.44	104	101		305	70	19	15.3	4.8
START 1340	70 - 80		620	1.10	1.10	~~644.60~~ 649.99	104	102		294	58	5	14.9	5.2
	80 - 90		622	1.10	1.10	655.49	106	102		305	59	6	15.4	4.7
	90 - 100		622	1.10	1.10	660.94	107	102		322	61	7	15.1	5.0
	100 - 110		626	1.10	1.10	666.47	107	102		319	62	10	15.8	4.3
	110 - 120		625	1.10	1.10	671.92	106	102		319	64	12	15.4	5.0
						64.76								4.98
AVERAGE	1.2	-3.5	621.3	1.10	1.10	~~59.390~~	102.8						15.12	5.0

Pre-Leak Check: 0.015 ft^3 @ 10.0 "Hg

~~Pre~~-Leak Check: 0.005 ft^3 @ 15.0 "Hg

NOTE: Purge for 10 minutes at end of sampling.

Pre Pitot +OK@5.5" - OK@3.1"

Post Pitot: +OK@3.0" - OK @3.5"

Test 3

ONTARIO HYDRO Hg SAMPLING AND SPECIATION FIELD DATA SHEET

Page 1 of 1

PLANT	PLANT NO. 1
LOCATION	Air Heater Outlet
DUCT DIMENSIONS	
DUCT AREA	
DATE	March 6, 2003
TIME	14:15 - 16:12
IMPINGER BOX	Filter #C
METER BOX	N-5
PITOT TUBE DESC	F-5

AMBIENT TEMP [°F]	89
BAROMETRIC PRESSURE [" Hg]	29.75
%H_2O (Assumed)	8.7
PROBE LENGTH [ft]	8'
NOZZLE ID [inch]	0.199
CALIBRATION FACTORS: delta H	1.999
Y	1.015
C(p)	~~0.890~~ 0.800
K	1.08

HEATER BOX SETTING			
PROBE HTR SETTING		Test ID:	
DUCT X-SECTION	circ ?	rect ?	other:
Dry Mole Wt (Assumed)			
Wet Mole Wt (Assumed)			

116.5 H_2O

OPERATOR(S) [illegible] SCS

TRAVERSE POINT [port-inch]	SAMPLE TIME [minute]	STATIC PRES [" H_2O]	STACK TEMP (1) [°F]	PITOT HEAD [" H_2O]	METER DIFF PRES SETTING [" H_2O]	METER READING [ft^3]	METER TEMP 76.8 (6) [°F] (5) inlet	outlet	FILTER BOX (3) [°F]	PROBE TEMP (2) [°F]	LAST IMP TEMP (4) [°F]	METER VACUUM [" Hg]	METER EXHAUST O_2 [% vol]	CO_2 13.85 [% vol]
						123.30								
W-A-25.5"	0-5													
W-A-76.5"	5-10													
W-B-25.5"	10-15													
W-B-76.5"	15-20													
W-C-25.5"	20-25													
W-C-76.5"	25-30													
W-D-25.5"	30-35													
W-D-76.5"	35-40													
E-A-25.5"	40-45	-11.02	253	.85	.94	165.60 / 172.30	98	95	260	191	66	2.5	6.6	13.5
E-A-76.5"	45-50	-11.02	262	1.20	1.30	179.52	101	95	267	203	66	3.0	6.0	14.2
E-B-25.5"	50-55		254	.95	1.05	150.10 / 156.65	99	95	261	191	61	5.0	2.6	13.0
E-B-76.5"	55-60		275	1.30	1.40	164.67	101	95	261	191	63	11.0	5.4	14.7
E-C-25.5"	60-65		264	.80	.85	136.60 / 143.41	97	95	261	190	65	3.5	6.7	13.6
E-C-76.5"	65-70	-11.51	255	1.30	1.40	150.32	100	95	264	202	66	6	5.9	14.4
E-D-25.5"	70-75		274	0.90	0.98	129.59	93	92	265	190	61	3.0	6.0	14.1
E-D-76.5"	75-80		271	1.30	1.40	136.80	94	94	261	207	61	5.0	5.6	14.5
AVERAGE	96	-11.20	271.25	~~1.75~~	1.165	153.81	96	94.5					6.175	14.0

Pre-Leak Check: 0.0 ft³ @ -10 "Hg Pre-Leak Check: 0.0 ft³ @ 15 "Hg

NOTE: Purge for 10 minutes at end of sampling.

Pitot leak check OK 1.06 pm

ONTARIO HYDRO Hg SAMPLING AND SPECIATION FIELD DATA SHEET

Run #3

Page _____ of _____

PLANT	PLANT NO. 1	AMBIENT TEMP [°F]		HEATER BOX SETTING	
LOCATION	Stack	BAROMETRIC PRESSURE [" Hg]	29.75	PROBE HTR SETTING	
DUCT DIMENSIONS	206"	%H_2O (Assumed)	[illegible]	DUCT X-SECTION	circ ? / rect ? / other:
DUCT AREA	231.41 ft^2	PROBE LENGTH [ft]	8'		
DATE	9/1, 2003	NOZZLE ID [inch]	0.246	Dry Mole Wt (Assumed)	
TIME	[illegible]	CALIBRATION FACTORS: delta H	1.861	Wet Mole Wt (Assumed)	
IMPINGER BOX		Y	0.9910		
METER BOX	[illegible]	C(p)	0.841		
PITOT TUBE DESC	[illegible]	K	1.75	OPERATOR(S)	[illegible]

Test ID: _____

212.3 gm H_2O

0 gm

TRAVERSE POINT [port-inch]	SAMPLE TIME [minute]	STATIC PRES [" H_2O]	STACK TEMP [°F]	PITOT HEAD [" H_2O]	METER DIFF PRES SETTING [" H_2O]	METER READING [ft^3]	METER TEMP [°F] inlet	METER TEMP [°F] outlet	FILTER BOX [°F]	PROBE TEMP [°F]	LAST IMP TEMP [°F]	METER VACUUM [" Hg]	METER EXHAUST O_2 [% vol]	METER EXHAUST CO_2 [% vol]
						175.40								
SW-9"	0-10		191	0.64	1.10	181.46	104	97	251	251	65	4.0	6.9	13.4
SW-30"	10-20		191	0.75	1.30	207.84	104	97	252	246	69	4.0	7.1	13.2
SW-61"	20-30		191	0.75	1.30	214.27	103	96	252	251	70	4.40	7.0	13.2
						176.10								
NW-9"	30-40		191	0.62	1.10	181.90	105	96	251	252	63	4.0	6.4	13.8
NW-30"	40-50		191	0.78	1.40	188.50	107	98	252	248	66	4.5	7.1	13.1
NW-61"	50-60	.80	191	0.68	1.20	194.84	108	98	251	249	70	4.0	6.8	13.4
						157.80								
NE-9"	60-70		191	0.60	1.05	163.57	101	93	250	248	60	3.75	6.6	13.6
NE-30"	70-80		191	0.70	1.20	169.64	102	95	253	252	63	4.0	7.1	13.1
NE-61"	80-90		191	0.70	1.20	175.84	104	95	251	252	66	4.0	6.8	13.4
						151.16								
SE-9"	90-100		191	[illegible]	[illegible]	145.12	97	92	252	251	60	4.0	7.0	13.1
SE-30"	100-110		191	0.75	1.30	151.28	100	93	250	249	63	4.0	7.1	13.1
SE-61"	110-120	.71	191	0.71	1.22	157.46	100	93	254	246	64	4.0	6.9	13.3
AVERAGE	[illegible]	[illegible]	[illegible]	[illegible]	[illegible]	[illegible]	[illegible]		post				[illegible]	[illegible]

Pre-Leak Check: _____ ft^3 @ _____ "Hg

Pre-Leak Check: [illegible] ft^3 @ 7 "Hg

NOTE: Purge for 10 minutes at end of sampling.

ONTARIO HYDRO Hg SAMPLING AND SPECIATION FIELD DATA SHEET

PLANT	PLANT NO. 1	AMBIENT TEMP [°F]	82	HEATER BOX SETTING	NA
LOCATION	SCR Inlet	BAROMETRIC PRESSURE [" Hg]	29.80	PROBE HTR SETTING	325
DUCT DIMENSIONS		%H_2O (Assumed)	9.5	DUCT X-SECTION	circ ? / rect ? / other: Filter #9, Filter #11
DUCT AREA		PROBE LENGTH [ft]	5'		
DATE	Mar. 5, 2003	NOZZLE ID [inch]	0.212	Dry Mole Wt (Assumed)	
TIME	10:05-10:53/11:03-11:58	CALIBRATION FACTORS: delta H	1.917	Wet Mole Wt (Assumed)	
IMPINGER BOX	Train Inlet	Y	1.014		
METER BOX	N-3	C(p)	0.811		
PITOT TUBE DESC	E-3	K	0.9997	OPERATOR(S)	JEL BPS

Test ID: SCR-IN-4

TRAVERSE POINT [port-inch]	SAMPLE TIME [minute]	STATIC PRES [" H_2O]	STACK TEMP [°F]	PITOT HEAD [" H_2O]	METER DIFF PRES SETTING [" H_2O]	METER READING [ft^3]	METER TEMP [°F] inlet	METER TEMP [°F] outlet	FILTER BOX [°F]	PROBE TEMP [°F]	LAST IMP TEMP [°F]	METER VACUUM [" Hg]	METER EXHAUST O_2 [% vol]	METER EXHAUST CO_2 [% vol]
						678.046								
A-Top B-1	0 - 10	-3.2	606	1.2	1.2	683.348	92	91	NA	255	69	7.0	5.7	14.8
	10 - 20		611	1.2	1.2	688.860	93	91		270	68	7.5	5.3	14.8
	20 - 30		611	1.1	1.1	694.109	95	92		281	67	13.0	5.7	14.4
	30 - 40	-2.9	615	1.1	1.1	699.290	97	92		287	68	11.0	5.3	14.6
10:53 Stop filter change	40 - 50		612	1.1	1.1	704.485	98	93		278	69	14.0	5.3	14.8
11:03 Restart	50 - 60	-3.8	604	1.1	1.1	709.660 / 709.672	97	95		249	68	6.0	4.8	15.2
	60 - 70		611	1.1	1.1	715.062	100	96		293	65	7.5	5.2	14.9
	70 - 80	-5.1	616	1.1	1.1	720.250	102	97		298	63	9.0	5.0	15.1
	80 - 90		613	1.1	1.1	725.428	102	98		307	64	11.0	5.0	15.1
Stop 11:58	90 - 100	-3.4	616	1.1	1.1	730.675	103	98		296	66	15.0	5.1	15.0
	100 - 110													
	110 - 120													
				Pitots										
AVERAGE	100	[illegible]	611.2	1.120	1.12	52.454	96.2						5.24	14.87

Pre-Leak Check: 0.008 ft^3 @ 10.0 "Hg

Post Pre-Leak Check: 0.008 ft^3 @ 8.0 "Hg

NOTE: Purge for 10 minutes at end of sampling. Pre Filter: +0.0240" − 0.0245" Post Filter: +0.0248" − 0.0253"

Test 1

ONTARIO HYDRO Hg SAMPLING AND SPECIATION FIELD DATA SHEET

Page _____ of _____

PLANT	PLANT NO. 1	AMBIENT TEMP [°F]	80	HEATER BOX SETTING	
LOCATION	Air Heater Outlet	BAROMETRIC PRESSURE [" Hg]	29.80	PROBE HTR SETTING	Test ID: _____
DUCT DIMENSIONS		%H_2O (Assumed)	8.7	DUCT X-SECTION	circ ? / rect ? / other:
DUCT AREA		PROBE LENGTH [ft]	8'		
DATE	March 7, 2003	NOZZLE ID [inch]	.250	Dry Mole Wt (Assumed)	
TIME	1003 - 1328	CALIBRATION FACTORS: delta H	1.999	Wet Mole Wt (Assumed)	
IMPINGER BOX	Filter #8	Y	1.015		
METER BOX	N-5	C(p)	.84 0.800		
PITOT TUBE DESC	S-5	K	3.04	OPERATOR(S)	[illegible]

163.5 .3 H_2O

TRAVERSE POINT [port-inch]	SAMPLE TIME [minute]	STATIC PRES [" H_2O]	STACK TEMP [°F] (1)	PITOT HEAD [" H_2O]	METER DIFF PRES SETTING [" H_2O]	METER READING [ft^3]	METER TEMP [°F] (6) inlet	METER TEMP [°F] (7) outlet	FILTER BOX [°F] (3)	PROBE TEMP [°F] (2)	LAST IMP TEMP [°F] (4)	METER VACUUM [" Hg]	METER EXHAUST O_2 [% vol]	METER EXHAUST CO_2 [% vol]
						192.40								
W-A-25.5"	0-10 .05		226	0.10	0.30	195.39	86	87	260	253	61	.5"	8.4	11.9
W-A-76.5"	10-20 5-10		222	0.15	0.45	198.92	89	90	262	230	57	1"	8.8	11.5
W-B-25.5"	20-30 10-15	-0.08	230	0.05	0.15	~~199.67~~ 201.88	91	93	262	258	60	.5	7.9	12.4
W-B-76.5"	30-40 15-20		236	0.17	0.51	205.48	93	85	262	257	53	1	6.2	13.0
W-C-25.5"	40-50 20-25		240	0.10	0.30	206.37	95	96	261	253	60	1	6.2	13.8
W-C-76.5"	50-60 25-30		243	0.18	0.54	~~209.75~~ 213.09	95	96	261	257	48	2	7.2	12.9
W-D-25.5"	60-70 30-35		243	0.10	0.30	~~213.80~~ 216.95	96	96	269	264	57	1	6.3	13.7
W-D-76.5"	70-80 35-40		252	0.12	0.36	219.95	95	96	261	236	57	.25	6.5	13.6
E-A-25.5"	80-90 40-45		258	0.32	0.18	~~220.38~~ 223.03	96	92	263	243	57	4	5.8	14.4
E-A-76.5"	90-100 45-50		270	0.67	2.0	231.92	100	83	263	229	49	8	5.9	14.4
E-B-25.5"	100-110 50-55	-0.12	263	0.30	1.50	~~232.45~~ 234.16	97	83	261	241	57	10	6.0	14.2
E-B-76.5"	110-120 55-60		264	0.63	1.85	244.20	99	94	261	232	57	16	5.3	14.7
E-C-25.5"	120-130 60-65		270	0.35	1.05	~~245.38~~ 245.59	96	93	263	228	61	14.5	6.8	13.4
E-C-76.5"	130-140 65-70		253	0.65	2.0	257.61	98	93	263	219	61	4"	3.6	14.4
E-D-25.5"	140-150 70-75		279	0.18	1.37	~~258.32~~ 264.63	99	95	260	200	60	3	6.4	13.5
E-D-76.5"	150-160 75-80		258	0.65	1.95	271.81	101	93	261	211	61	3.5	6.4	15.8
AVERAGE	160	-0.02	252	0.16	0.99	74.31	94.47		.054				6.67	13.51

Pre-Leak Check: PASS ft³ @ -13 "Hg

Pre-Leak Check: PASS ft³ @ 18" "Hg

NOTE: Purge for 10 minutes at end of sampling.

Post leak check OK

0.128 PAC

Pitot leak check OKAY

ONTARIO HYDRO Hg SAMPLING AND SPECIATION FIELD DATA SHEET

Page _____ of _____

PLANT	PLANT NO. 1	AMBIENT TEMP [°F]	
LOCATION	Stack	BAROMETRIC PRESSURE [" Hg]	27.5
DUCT DIMENSIONS	206"	%H_2O (Assumed)	1.5
DUCT AREA	231.41 ft^2	PROBE LENGTH [ft]	8'
DATE	2/1 , 2003	NOZZLE ID [inch]	0.255
TIME	10:05 - 12:18	CALIBRATION FACTORS: delta H	1.861
IMPINGER BOX		Y	0.996
METER BOX	[illegible]	C(p)	0.857
PITOT TUBE DESC	[illegible]	K	1.71

HEATER BOX SETTING			
PROBE HTR SETTING		Test ID: _____	
DUCT X-SECTION	circ ?	rect ?	other:
Dry Mole Wt (Assumed)			
Wet Mole Wt (Assumed)			
OPERATOR(S)	KKO, [illegible]		

20.1 -3 H_2O
0.0004 gm

TRAVERSE POINT [port-inch]	SAMPLE TIME [minute]	STATIC PRES [" H_2O]	STACK TEMP [°F]	PITOT HEAD [" H_2O]	METER DIFF PRES SETTING [" H_2O]	METER READING [ft^3]	METER TEMP [°F] inlet	METER TEMP [°F] outlet	FILTER BOX [°F]	PROBE TEMP [°F]	LAST IMP TEMP [°F]	METER VACUUM [" Hg]	METER EXHAUST O_2 [% vol]	METER EXHAUST CO_2 [% vol]
						221.20								
SW-9"	0-10		188	.71	1.20	227.63	95	90	260	249	67	4.5	8.0	12.4
SW-30"	10-20		190	.90	1.60	234.56	98	90	242	249	73	5.0	7.8	12.4
SW-61"	20-30		189	.88	1.50	241.55	99	90	254	248	66	5.0	7.9	12.5
				[illegible]	[illegible]	241.90								
NW-9"	30-40		188	.74	1.20	248.12	98	90	227	251	69	4.25	7.8	12.5
NW-30"	40-50		188	.88	1.50	254.90	99	91	232	253	68	5.0	7.8	12.5
NW-61"	50-60	.80	188	.82	1.40	261.61	99	91	254	250	72	5.0	7.9	12.4
						262.00								
NE-9"	60-70		187	.71	1.20	268.11	98	91	~~250~~ 245	248	70	4.25	7.9	12.4
NE-30"	70-80		188	.71	1.20	274.30	100	92	240	250	70	4.5	7.7	12.5
NE-61"	80-90		188	.80	1.40	280.84	101	93	260	246	71	5.0	7.8	12.5
						281.00								
SE-9"	90-100		187	.71	1.20	287.48	99	92	238	252	71	4.5	8.0	12.3
SE-30"	100-110	.71	188	.80	1.40	293.90	101	92	230	252	75	5.0	7.6	12.6
SE-61"	110-120		188	.84	1.45	300.37	102	93	258	252	72	5.0	7.8	12.5
AVERAGE	[illegible]	[illegible]	[illegible]	[illegible]	[illegible]	[illegible]	[illegible]	[illegible]	[illegible]			[illegible]	[illegible]	[illegible]

Pre-Leak Check: _____ ft^3 @ _____ "Hg Pre-Leak Check: [illegible] ft^3 @ [illegible] "Hg

NOTE: Purge for 10 minutes at end of sampling.

PLANT NO. 1

Axial Flow Check

Location	Stack	Duct Ht, "	NA	Barometric	29.74
Date	3/3/03	Duct ID,"	206	Static	
Time	1440-1505	Duct Area	231.41 ft^2	Dry Bulb	
Tube I.D.	S-19	% O_2		Wet Bulb	
C-Factor	0.766	% CO_2		% H_20	
Operator(s)	DVC, KC	% N_2		W.M.Wt	

PORT/ POINT	DISTANCE [" From Wall]	TEMP [°F]	DELTA P [" H_2O]	VELOCITY [Ft/Sec]	Null Angle	
SW-1	9	190.5	0.437		±2	
SW-2	30	191.7	0.762		±2	
SW-3	61	192.3	0.735		±2	-0.899
NW-1	9	191.2	0.333		±2	
NW-2	30	191.9	0.729		±2	
NW-3	61	193.0	0.750		±2	-0.905
NE-1	9	192.0	0.441		±2	
NE-2	30	193.3	0.632		±2	
NE-3	61	193.2	0.694		±2	-.887
SE-1	9	191.4	0.460		±2	
SE-2	30	191.7	0.795		±2	
SE-3	61	193.0	0.797		±2	-.804
Average						
Maximum						
Minimum						
SDEV						

DATA SUMMARY	
Velocity, [fps]	45.9
acfm	638726
scfm	571138
dscfm	457358
Ex Air Free cfm	
Est. MM Btu/hr Heat Input	
Est. Firing Rate, lb/hr	

APPENDIX B

Plant 1 Process Data

		MAJI007	MAJI008	NAJT101	NAJT201	AEFI135	AEFI131	FDFI002	FDFI022	AAFY018A	FBFI021	AETE137	AAPTOO6	FDPT002	FDTT002	FDPT022
		Generator	Generator	13.8 kv	13.8 kv	FW Flow	SH Spray	Sootblower	SCR	Cont.	MS to Aux	Feedwater	Selected	Sootblower	Sootblower	A.H.
		Megawatts	Megavars	NAA01 Gen	NAA02 Gen	Comp.	Flow	Steam	Sootblower	Blowdown	Stm. Flow	Temp.	Drum	Steam	Steam	Sootblower
				Aux Load	Aux Load			Flow	Stm Flow	Flow			Pressure	Pressure	Temp.	Stm. Press
DATE	TIME	MW	MVAR	MW	MW	KPPH	KPPH	KPPH	KPPH	PCT	KPPH	DEG F	PSIG	PSIG	DEG F	PSIG
03/04/03	14:14:00	194.519028	20.1659851	13.8317862	7.09350538	1420.77686	45.3282166	0	2.05734634	0	0	429.286896	2473.54102	315.795868	619.567871	382.93457
03/04/03	14:15:00	194.519028	20.1659851	13.8317862	7.39563036	1420.77686	45.3282166	0	2.05734634	0	0	429.286896	2473.54102	315.795868	619.567871	382.93457
03/04/03	14:16:00	194.519028	20.1659851	13.8317862	7.39563036	1453.70935	65.4685822	0	2.05734634	0	0	429.286896	2473.54102	315.795868	619.567871	382.93457
03/04/03	14:17:00	194.519028	20.1659851	14.1339102	7.69775438	1453.70935	58.3263397	0	2.05734634	0	0	429.286896	2473.54102	315.795868	619.567871	382.93457
03/04/03	14:18:00	194.519028	20.1659851	13.7768555	7.69775438	1453.70935	82.536911	0	2.05734634	0	0	429.286896	2473.54102	315.795868	619.567871	382.93457
03/04/03	14:19:00	194.519028	20.1659851	14.0881348	7.36816406	1453.70935	45.7903023	0	2.05734634	0	0	429.286896	2473.54102	315.795868	619.567871	382.93457
03/04/03	14:20:00	194.519028	20.1659851	14.0881348	7.36816406	1424.53345	45.7903023	0	2.05734634	0	0	429.286896	2473.54102	315.795868	619.567871	382.93457
03/04/03	14:21:00	194.519028	20.1659851	14.0881348	7.36816406	1423.5166	57.2333145	0	2.05734634	0	0	429.286896	2473.54102	315.795868	619.567871	382.93457
03/04/03	14:22:00	194.519028	20.1659851	14.0881348	7.36816406	1427.20422	45.3282166	0	2.05734634	0	0	429.286896	2473.54102	315.795868	619.567871	382.93457
03/04/03	14:23:00	194.519028	20.1659851	14.0881348	7.69775438	1388.14819	47.5937576	0	2.05734634	0	0	429.286896	2473.54102	315.795868	619.567871	382.93457
03/04/03	14:24:00	194.519028	20.1659851	14.0881348	7.69775438	1420.51013	70.1262131	0	2.05734634	0	0	429.286896	2473.54102	315.795868	619.567871	382.93457
03/04/03	14:25:00	194.519028	20.1659851	14.0881348	7.69775438	1383.66479	87.4895096	0	2.05734634	0	0	429.286896	2473.54102	315.795868	619.567871	382.93457
03/04/03	14:26:00	194.519028	20.1659851	13.7768555	7.69775438	1401.03308	45.7903023	0	2.05734634	0	0	429.286896	2473.54102	315.795868	619.567871	382.93457
03/04/03	14:27:00	194.519028	20.1659851	14.0881348	7.67944336	1411.33057	48.9027481	0	2.05734634	0	0	429.286896	2473.54102	315.795868	619.567871	382.93457
03/04/03	14:28:00	194.519028	20.1659851	14.0881348	7.30407715	1414.39709	66.1085434	0	2.05734634	0	0	429.286896	2473.54102	315.795868	619.567871	382.93457
03/04/03	14:29:00	194.519028	20.1659851	14.0881348	7.30407715	1383.67761	80.9921188	0	2.05734634	0	0	429.286896	2473.54102	315.795868	619.567871	382.93457
03/04/03	14:30:00	194.519028	20.1659851	14.0881348	7.15759277	1415.42847	46.2477722	0	2.05734634	0	0	429.286896	2473.54102	315.795868	619.567871	382.93457
03/04/03	14:31:00	194.519028	20.1659851	14.0881348	7.52380371	1456.76794	44.3896675	0	2.05734634	0	0	429.286896	2473.54102	315.795868	619.567871	382.93457
03/04/03	14:32:00	194.519028	20.1659851	14.0881348	7.52380371	1385.78918	67.3702698	0	2.05734634	0	0	429.286896	2473.54102	315.795868	619.567871	382.93457
03/04/03	14:33:00	194.519028	20.1659851	14.0881348	7.52380371	1377.78516	89.1579361	0	2.05734634	0	0	429.286896	2473.54102	315.795868	619.567871	382.93457
03/04/03	14:34:00	194.519028	20.1659851	13.7768555	7.52380371	1428.34668	44.8614235	0	2.05734634	0	0	429.286896	2473.54102	315.795868	619.567871	382.93457
03/04/03	14:35:00	194.519028	20.1659851	13.7768555	7.52380371	1432.79504	47.1493912	0	2.05734634	0	0	429.286896	2473.54102	315.795868	619.567871	382.93457
03/04/03	14:36:00	194.519028	20.1659851	13.7768555	7.23999071	1432.79504	69.8253632	0	2.05734634	0	0	429.286896	2473.54102	315.795868	619.567871	382.93457
03/04/03	14:37:00	194.519028	20.1659851	13.7768555	7.21252394	1400.09839	89.1579361	0	2.05734634	0	0	429.286896	2473.54102	315.795868	619.567871	382.93457
03/04/03	14:38:00	194.519028	20.1659851	14.0789795	7.18505764	1400.09839	48.03405	0	2.05734634	0	0	429.286896	2473.54102	315.795868	619.567871	382.93457
03/04/03	14:39:00	194.519028	20.1659851	14.0789795	7.49633694	1430.81885	45.7903023	0	2.05734634	0	0	429.286896	2473.54102	315.795868	619.567871	382.93457
03/04/03	14:40:00	194.519028	20.1659851	14.0789795	7.82592773	1434.86194	62.8435135	0	2.05734634	0	0	429.286896	2473.54102	315.795868	619.567871	382.93457
03/04/03	14:41:00	194.519028	20.1659851	14.0789795	7.82592773	1403.88025	88.2084198	0	2.05734634	0	0	429.286896	2473.54102	315.795868	619.567871	382.93457
03/04/03	14:42:00	194.519028	20.1659851	13.7677002	7.82592773	1403.88025	47.1493912	0	2.05734634	0	0	429.286896	2473.54102	315.795868	619.567871	382.93457
03/04/03	14:43:00	194.519028	20.1659851	13.7677002	7.51464796	1445.56799	45.7903023	0	2.05734634	0	0	429.286896	2473.54102	315.795868	619.567871	382.93457
03/04/03	14:44:00	194.519028	20.1659851	13.7677002	7.11181641	1376.47375	72.1970139	0	2.05734634	0	0	429.286896	2473.54102	315.795868	619.567871	382.93457
03/04/03	14:45:00	194.519028	20.1659851	13.7677002	7.19421339	1418.28149	85.5428696	0	2.05734634	0	0	429.286896	2473.54102	315.795868	619.567871	382.93457
03/04/03	14:46:00	194.519028	20.1659851	13.7677002	7.17590237	1418.62732	45.7903023	0	2.05734634	0	0	429.286896	2473.54102	315.795868	619.567871	382.93457
03/04/03	14:47:00	194.519028	20.1659851	13.7677002	7.17590237	1428.02075	47.1493912	0	2.05734634	0	0	429.286896	2473.54102	315.795868	619.567871	382.93457
03/04/03	14:48:00	194.519028	20.1659851	13.7677002	7.56957912	1389.62573	70.1262131	0	2.05734634	0	0	429.286896	2473.54102	315.795868	619.567871	382.93457
03/04/03	14:49:00	194.519028	20.1659851	13.7677002	7.56957912	1422.44287	84.0533447	0	2.05734634	0	0	429.286896	2473.54102	315.795868	619.567871	382.93457
03/04/03	14:50:00	194.519028	20.1659851	13.7677002	7.56957912	1463.49426	44.3896675	0	2.05734634	0	0	429.286896	2473.54102	315.795868	619.567871	382.93457
03/04/03	14:51:00	194.519028	20.1659851	13.7677002	7.56957912	1432.43103	44.8614235	0	2.05734634	0	0	429.286896	2473.54102	315.795868	619.567871	382.93457
03/04/03	14:52:00	194.519028	20.1659851	13.7677002	7.4597168	1418.15002	64.1694717	0	2.05734634	0	0	429.286896	2473.54102	315.795868	619.567871	382.93457
03/04/03	14:53:00	194.519028	20.1659851	13.7677002	7.17590237	1387.5448	90.3308182	0	2.05734634	0	0	429.286896	2473.54102	315.795868	619.567871	382.93457
03/04/03	14:54:00	194.519028	20.1659851	13.7677002	7.23083496	1420.53894	46.2477722	0	2.05734634	0	0	429.286896	2473.54102	315.795868	619.567871	382.93457
03/04/03	14:55:00	194.519028	20.1659851	13.7677002	6.99279785	1429.67554	46.7007561	0	2.05734634	0	0	429.286896	2473.54102	315.795868	619.567871	382.93457
03/04/03	14:56:00	194.519028	20.1659851	13.7677002	7.4047842	1394.44067	67.6820374	0	2.05734634	0	0	429.286896	2473.54102	315.795868	619.567871	382.93457
03/04/03	14:57:00	194.519028	20.1659851	13.7677002	7.4047842	1364.01135	78.8853302	0	2.05734634	0	0	429.286896	2473.54102	315.795868	619.567871	382.93457
03/04/03	14:58:00	194.519028	20.1659851	13.7677002	7.4047842	1417.11316	45.7903023	0	2.05734634	0	0	429.286896	2473.54102	315.795868	619.567871	382.93457
03/04/03	14:59:00	194.519028	20.1659851	13.7677002	7.4047842	1417.12927	45.7903023	0	2.05734634	0	0	429.286896	2473.54102	315.795868	619.567871	382.93457
03/04/03	15:00:00	194.519028	20.1659851	13.7677002	7.4047842	1382.34827	68.9149628	0	2.05734634	0	0	429.286896	2473.54102	315.795868	619.567871	382.93457
03/04/03	15:01:00	194.519028	20.1659851	13.7677002	7.36816406	1391.36292	89.6289215	0	2.05734634	0	0	429.286896	2473.54102	315.795868	619.567871	382.93457
03/04/03	15:02:00	194.519028	20.1659851	13.7677002	7.6245122	1437.41797	45.3282166	0	2.05734634	0	0	429.286896	2473.54102	315.795868	619.567871	382.93457
03/04/03	15:03:00	194.519028	20.1659851	13.7677002	7.16674852	1448.45935	45.3282166	0	2.05734634	0	0	429.286896	2473.54102	315.795868	619.567871	382.93457
03/04/03	15:04:00	194.519028	20.1659851	13.7677002	7.16674852	1442.46777	64.1694717	0	2.05734634	0	0	429.286896	2473.54102	315.795868	619.567871	382.93457
03/04/03	15:05:00	194.519028	20.1659851	13.7677002	7.46887255	1358.76501	76.1699371	0	2.05734634	0	0	429.286896	2473.54102	315.795868	619.567871	382.93457
03/04/03	15:06:00	194.519028	20.1659851	13.7677002	7.46887255	1433.40906	75.3362503	0	2.05734634	0	0	429.286896	2473.54102	315.795868	619.567871	382.93457
03/04/03	15:07:00	194.519028	20.1659851	14.0698233	7.46887255	1402.40601	47.1493912	0	2.05734634	0	0	429.286896	2473.54102	315.795868	619.567871	382.93457
03/04/03	15:08:00	194.519028	20.1659851	13.7677002	7.46887255	1402.40601	68.9149628	0	2.05734634	0	0	429.286896	2473.54102	315.795868	619.567871	382.93457
03/04/03	15:09:00	194.519028	20.1659851	13.7677002	7.07519531	1372.91125	64.8222656	0	2.05734634	0	0	429.286896	2473.54102	315.795868	619.567871	382.93457
03/04/03	15:10:00	194.519028	20.1659851	13.7677002	7.5970459	1373.58911	88.6844406	0	2.05734634	0	0	429.286896	2473.54102	315.795868	619.567871	382.93457
03/04/03	15:11:00	194.519028	20.1659851	13.7677002	7.00195217	1421.62207	48.03405	0	2.05734634	0	0	429.286896	2473.54102	315.795868	619.567871	382.93457
03/04/03	15:12:00	194.519028	20.1659851	13.7677002	6.94702101	1455.43701	45.3282166	0	2.05734634	0	0	429.286896	2473.54102	315.795868	619.567871	382.93457
03/04/03	15:13:00	194.519028	20.1659851	13.7677002	6.94702101	1432.39087	63.1775894	0	2.05734634	0	0	429.286896	2473.54102	315.795868	619.567871	382.93457
03/04/03	15:14:00	194.519028	20.1659851	13.7677002	7.61535645	1441.44788	43.9128456	0	2.05734634	0	0	429.286896	2473.54102	315.795868	619.567871	382.93457

DATE	TIME	FDTT022 SCR/AH Sootblower Stm Temp DEG F	ABPIOO7 Turbine Throttle Pressure PSIG	ABTE008 Main Stm Temp DEG F	AEFI111 Reheater Spray Flow KPPH	ABPI010 Cold Reheat Stm Press PSIG	ABTE016 Cold Reheat Temp DEG F	ABPT024 Hot Reheat Pressure PSIG	ABTE022 Hot Reheat Temp DEG F	AETE119 BFP Hdr Discharge Temp DEG F	AETE130 FW Htr #7 Outlet Temp DEG F	AETE035 FW Htr #7 Casc Drain Temp DEG F	AFPT026 Cold Reheat Ext Hdr Press PSIG	AFTE027 Cold Reheat Ext Hdr Temp DEG F	AFTI017 HP Aux Steam Temp DEG F	AFFI017 Spray Flow to HP Aux Steam KPPH
03/04/03	14:14:00	776.428223	2409.48462	958.938904	0	327.538208	581.70166	308.166473	942.598633	356.920227	428.410034	358.959229	323.120087	574.7453	386.345276	0
03/04/03	14:15:00	776.428223	2409.48462	957.272278	0	327.538208	581.70166	308.166473	942.598633	356.920227	428.410034	358.959229	323.120087	574.7453	386.345276	0
03/04/03	14:16:00	776.428223	2405.82251	955.616821	0	327.538208	569.151428	308.166473	942.598633	356.920227	428.410034	358.959229	323.120087	574.7453	386.345276	0
03/04/03	14:17:00	776.428223	2401.24487	955.616821	0	327.538208	569.151428	308.166473	942.598633	356.920227	428.410034	358.959229	323.120087	574.7453	386.345276	0
03/04/03	14:18:00	776.428223	2393.9209	955.616821	0	327.538208	569.151428	308.166473	942.598633	356.920227	428.410034	358.959229	323.120087	574.7453	386.345276	0
03/04/03	14:19:00	776.428223	2393.9209	955.616821	0	327.538208	569.151428	308.166473	942.598633	356.920227	428.410034	358.959229	323.120087	574.7453	386.345276	0
03/04/03	14:20:00	776.428223	2393.00513	955.616821	0	327.538208	569.151428	308.166473	940.932373	356.920227	428.410034	358.959229	323.120087	574.7453	386.345276	0
03/04/03	14:21:00	776.428223	2400.32959	955.616821	0	327.538208	569.151428	308.166473	940.932373	356.920227	428.410034	358.959229	323.120087	574.7453	386.345276	0
03/04/03	14:22:00	776.428223	2393.00513	958.871704	0	327.538208	569.151428	308.166473	939.277161	356.920227	428.410034	358.959229	323.120087	574.7453	386.345276	0
03/04/03	14:23:00	776.428223	2393.9209	960.493713	0	327.538208	569.151428	308.166473	939.277161	356.920227	428.410034	358.959229	323.120087	574.7453	386.345276	0
03/04/03	14:24:00	776.428223	2404.90723	962.104248	0	327.538208	569.151428	308.166473	939.277161	356.920227	428.410034	358.959229	323.120087	574.7453	386.345276	0
03/04/03	14:25:00	776.428223	2401.24487	963.726196	0	327.538208	569.151428	308.166473	939.277161	356.920227	428.410034	358.959229	323.120087	574.7453	386.345276	0
03/04/03	14:26:00	776.428223	2401.24487	965.336853	0	327.538208	569.151428	308.166473	939.277161	356.920227	428.410034	358.959229	323.120087	574.7453	386.345276	0
03/04/03	14:27:00	776.428223	2406.73828	965.336853	0	327.538208	569.151428	308.166473	940.820374	356.920227	428.410034	358.959229	323.120087	574.7453	386.345276	0
03/04/03	14:28:00	776.428223	2414.06226	963.681396	0	327.538208	569.151428	308.166473	940.842712	356.920227	428.410034	358.959229	323.120087	574.7453	386.345276	0
03/04/03	14:29:00	776.428223	2406.73828	962.059509	0	327.538208	569.151428	308.166473	939.209961	356.920227	428.410034	358.959229	323.120087	574.7453	386.345276	0
03/04/03	14:30:00	776.428223	2403.07593	962.059509	0	327.538208	569.151428	308.166473	939.209961	356.920227	428.410034	358.959229	323.120087	574.7453	386.345276	0
03/04/03	14:31:00	776.428223	2403.07593	962.048279	0	327.538208	569.151428	308.166473	939.209961	356.920227	428.410034	358.959229	323.120087	574.7453	386.345276	0
03/04/03	14:32:00	776.428223	2406.73828	960.404053	0	327.538208	569.151428	308.166473	939.209961	356.920227	428.410034	358.959229	323.120087	574.7453	386.345276	0
03/04/03	14:33:00	776.428223	2399.41382	960.348022	0	327.538208	569.151428	308.166473	940.775574	356.920227	428.410034	358.959229	323.120087	574.7453	386.345276	0
03/04/03	14:34:00	776.428223	2392.08984	961.980957	0	327.538208	569.151428	308.166473	940.775574	356.920227	428.410034	358.959229	323.120087	574.7453	386.345276	0
03/04/03	14:35:00	776.428223	2392.08984	961.980957	0	327.538208	569.151428	308.166473	940.775574	356.920227	428.410034	358.959229	323.120087	574.7453	386.345276	0
03/04/03	14:36:00	776.428223	2395.75195	961.980957	0	327.538208	569.151428	308.166473	940.775574	356.920227	428.410034	358.959229	323.120087	574.7453	386.345276	0
03/04/03	14:37:00	776.428223	2392.08984	963.558044	0	327.538208	569.151428	308.166473	942.329834	356.920227	428.410034	358.959229	323.120087	574.7453	386.345276	0
03/04/03	14:38:00	776.428223	2387.51221	963.558044	0	327.538208	569.151428	308.166473	942.329834	356.920227	428.410034	358.959229	323.120087	574.7453	386.345276	0
03/04/03	14:39:00	776.428223	2392.08984	961.891357	0	327.538208	569.151428	308.166473	942.329834	356.920227	428.410034	358.959229	323.120087	574.7453	386.345276	0
03/04/03	14:40:00	776.428223	2395.75195	963.502075	0	327.538208	569.151428	308.166473	942.329834	356.920227	428.410034	358.959229	323.120087	574.7453	386.345276	0
03/04/03	14:41:00	776.428223	2395.75195	963.502075	0	327.538208	569.151428	308.166473	942.329834	356.920227	428.410034	358.959229	323.120087	574.7453	386.345276	0
03/04/03	14:42:00	776.428223	2395.75195	965.123962	0	327.538208	569.151428	308.166473	942.329834	356.920227	428.410034	358.959229	323.120087	574.7453	386.345276	0
03/04/03	14:43:00	776.428223	2406.73828	965.123962	0	327.538208	569.151428	308.166473	942.329834	356.920227	428.410034	358.959229	323.120087	574.7453	386.345276	0
03/04/03	14:44:00	776.428223	2410.40039	966.712341	0	327.538208	569.151428	308.166473	942.329834	356.920227	428.410034	358.959229	323.120087	574.7453	386.345276	0
03/04/03	14:45:00	776.428223	2406.73828	966.712341	0	327.538208	569.151428	308.166473	943.850708	356.920227	428.410034	358.959229	323.120087	574.7453	386.345276	0
03/04/03	14:46:00	776.428223	2403.07593	965.168884	0	327.538208	569.151428	308.166473	943.850708	356.920227	428.410034	358.959229	323.120087	574.7453	386.345276	0
03/04/03	14:47:00	776.428223	2406.73828	963.580688	0	327.538208	569.151428	308.166473	942.318787	356.920227	428.410034	358.959229	323.120087	574.7453	386.345276	0
03/04/03	14:48:00	776.428223	2406.73828	962.037231	0	327.538208	569.151428	308.166473	942.318787	356.920227	428.410034	358.959229	323.120087	574.7453	386.345276	0
03/04/03	14:49:00	776.428223	2403.9917	960.605957	0	327.538208	569.151428	308.166473	941.011047	356.920227	428.410034	358.959229	323.120087	574.7453	386.345276	0
03/04/03	14:50:00	776.428223	2399.41382	960.605957	0	327.538208	569.151428	308.166473	942.21167	356.920227	428.410034	358.959229	323.120087	574.7453	386.345276	0
03/04/03	14:51:00	776.428223	2403.07593	960.605957	0	327.538208	569.151428	308.166473	942.21167	356.920227	428.410034	358.959229	323.120087	574.7453	386.345276	0
03/04/03	14:52:00	776.428223	2406.73828	959.252808	0	327.538208	569.151428	308.166473	940.724365	356.920227	428.410034	358.959229	323.120087	574.7453	386.345276	0
03/04/03	14:53:00	776.428223	2399.41382	960.919556	0	327.538208	569.151428	308.166473	940.724365	356.920227	428.410034	358.959229	323.120087	574.7453	386.345276	0
03/04/03	14:54:00	776.428223	2392.08984	962.597412	0	327.538208	569.151428	308.166473	940.724365	356.920227	428.410034	358.959229	323.120087	574.7453	387.134216	0
03/04/03	14:55:00	776.428223	2395.75195	962.608521	0	327.538208	569.151428	308.166473	940.724365	356.920227	428.410034	358.959229	323.120087	574.7453	387.134216	0
03/04/03	14:56:00	776.428223	2396.66748	962.608521	0	327.538208	569.151428	308.166473	940.724365	356.920227	428.410034	358.959229	323.120087	574.7453	387.134216	0
03/04/03	14:57:00	776.428223	2395.75195	964.219299	0	327.538208	569.151428	308.166473	940.724365	356.920227	428.410034	358.959229	323.120087	574.7453	387.134216	0
03/04/03	14:58:00	776.428223	2392.08984	965.841187	0	327.538208	569.151428	308.166473	940.724365	356.920227	428.410034	358.959229	323.120087	574.7453	387.134216	0
03/04/03	14:59:00	776.428223	2399.41382	965.841187	0	327.538208	569.151428	308.166473	942.401855	356.920227	428.410034	358.959229	323.120087	574.7453	387.134216	0
03/04/03	15:00:00	776.428223	2403.07593	965.841187	0	327.538208	569.151428	308.166473	942.401855	356.920227	428.410034	358.959229	323.120087	574.7453	387.134216	0
03/04/03	15:01:00	776.428223	2399.41382	967.440674	0	327.538208	569.151428	308.166473	942.401855	356.920227	428.410034	358.959229	323.120087	574.7453	387.134216	0
03/04/03	15:02:00	776.428223	2395.75195	965.796265	0	327.538208	569.151428	308.166473	944.034607	356.920227	428.410034	358.959229	323.120087	574.7453	387.134216	0
03/04/03	15:03:00	776.428223	2399.41382	964.163147	0	327.538208	569.151428	308.166473	944.034607	356.920227	428.410034	358.959229	323.120087	574.7453	387.134216	0
03/04/03	15:04:00	776.428223	2406.73828	964.163147	0	327.538208	569.151428	308.166473	944.034607	356.920227	428.410034	358.959229	323.120087	574.7453	387.134216	0
03/04/03	15:05:00	776.428223	2408.56934	964.163147	0	327.538208	569.151428	308.166473	944.034607	356.920227	428.410034	358.959229	323.120087	574.7453	387.134216	0
03/04/03	15:06:00	776.428223	2397.58301	965.762695	0	327.538208	569.151428	308.166473	944.034607	356.920227	428.410034	358.959229	323.120087	574.7453	387.134216	0
03/04/03	15:07:00	776.428223	2404.90723	965.751465	0	327.538208	569.151428	308.166473	944.034607	356.920227	428.410034	358.959229	323.120087	574.7453	387.134216	0
03/04/03	15:08:00	776.428223	2408.56934	964.140747	0	327.538208	569.151428	308.166473	944.034607	356.920227	428.410034	358.959229	323.120087	574.7453	387.134216	0
03/04/03	15:09:00	776.428223	2408.56934	964.140747	0	327.538208	569.151428	308.166473	944.034607	356.920227	428.410034	358.959229	323.120087	574.7453	387.134216	0
03/04/03	15:10:00	776.428223	2404.90723	964.140747	0	327.538208	569.151428	308.166473	944.034607	356.920227	428.410034	358.959229	323.120087	574.7453	387.134216	0
03/04/03	15:11:00	776.428223	2401.24487	962.507629	0	327.538208	569.151428	308.166473	942.368225	356.920227	428.410034	358.959229	323.120087	574.7453	387.134216	0
03/04/03	15:12:00	776.428223	2408.56934	960.885803	0	327.538208	569.151428	308.166473	942.368225	356.920227	428.410034	358.959229	323.120087	574.7453	387.134216	0
03/04/03	15:13:00	776.428223	2410.40039	959.241516	0	327.538208	569.151428	308.166473	940.746582	356.920227	428.410034	358.959229	323.120087	574.7453	387.134216	0
03/04/03	15:14:00	776.428223	2399.41382	959.241516	0	327.538208	569.151428	308.166473	940.746582	356.920227	428.410034	358.959229	323.120087	574.7453	387.134216	0

DATE	TIME	AETE055 BFBP Discharge Hdr Temp DEG F	AFPY044A DA Pegging Stm Valve PCT	ASFI006 Caulkins LP Stm Flow Output KPPH	ASFI016 Caulkins HP Stm Flow Output KPPH	MAJI002 Unit Megavars MVAR	MAJI004 Unit Megawatts MW	ADPT003C Absolute Cond Vac Calculated IN HGA	DALT004A Cooling Twr Basin Level IN	DAFI027 Cooling Twr Blow-Down Flow GPM	EAFI034 Cooling Twr Blow-Down SDA GPM	DATE014A Water Box Inlet A Temp DEG F	DATE014B Water Box Inlet B Temp DEG F	DATE016A Water Box Outlet A Temp DEG F	DATE016B Water Box Outlet B Temp DEG F	ABFI018 Main Steam Flow KPPH
03/04/03	14:14:00	250.296509	0	119.846512	15.3182926	-4.4555569	176.513672	2.48046875	60.0439415	0	174.817429	88.0295792	87.8980484	99.7324677	100.022606	1439.56409
03/04/03	14:15:00	250.296509	0	119.846512	16.2152901	-4.4555569	176.513672	2.48046875	60.0439415	0	171.550583	88.0295792	86.4758835	99.7324677	100.022606	1439.56409
03/04/03	14:16:00	250.296509	0	121.854233	15.8015633	-4.4555569	176.513672	2.48046875	60.0439415	0	165.107422	88.0295792	86.461235	99.7324677	100.022606	1439.56409
03/04/03	14:17:00	250.296509	0	121.854233	15.8015633	-4.4555569	176.513672	2.48046875	60.0439415	0	155.191437	88.0295792	87.8688278	99.7324677	100.022606	1439.56409
03/04/03	14:18:00	250.296509	0	119.589211	15.6208534	-4.4555569	176.513672	2.48046875	60.0439415	0	141.401215	88.0295792	87.8395996	99.7324677	100.022606	1439.56409
03/04/03	14:19:00	250.296509	0	117.266823	15.5023355	-4.4555569	176.513672	2.48046875	60.0439415	0	128.205536	88.0295792	87.8395996	99.7324677	100.022606	1439.56409
03/04/03	14:20:00	250.296509	0	117.266823	15.5023355	-4.4555569	176.513672	2.48046875	60.0439415	0	114.99012	88.0295792	87.854248	99.7324677	100.022606	1439.56409
03/04/03	14:21:00	250.296509	0	115.251236	15.9124308	-4.4555569	176.513672	2.48046875	60.0439415	0	104.802689	88.0295792	86.4173737	99.7324677	100.022606	1439.56409
03/04/03	14:22:00	250.296509	0	115.251236	15.8272686	-4.4555569	176.513672	2.48046875	60.0439415	0	95.0079651	88.0295792	86.4173737	99.7324677	100.022606	1439.56409
03/04/03	14:23:00	250.296509	0	115.251236	15.8272686	-4.4555569	176.513672	2.48046875	60.0439415	0	88.4642639	88.0295792	87.7957306	99.7324677	100.022606	1439.56409
03/04/03	14:24:00	250.296509	0	121.624054	15.8272686	-4.4555569	176.513672	2.48046875	60.0439415	0	85.187294	88.0295792	86.3735199	99.7324677	100.022606	1439.56409
03/04/03	14:25:00	250.296509	0	123.788849	15.6290531	-4.4555569	176.513672	2.48046875	60.0439415	0	85.187294	87.0555191	87.7811432	99.7324677	100.022606	1439.56409
03/04/03	14:26:00	250.296509	0	123.788849	15.7316036	-4.4555569	176.513672	2.48046875	59.5605469	0	1	87.0409317	86.3295975	99.7324677	100.022606	1439.56409
03/04/03	14:27:00	250.296509	0	118.203979	15.76647	-4.4555569	176.513672	2.48046875	59.5605469	0	1	87.0409317	86.3295975	99.7324677	100.022606	1439.56409
03/04/03	14:28:00	250.296509	0	118.203979	15.6488676	-4.4555569	176.513672	2.48046875	59.5605469	0	1	88.462532	87.7665558	99.7324677	100.022606	1439.56409
03/04/03	14:29:00	250.296509	0	116.155518	15.8534098	-4.4555569	176.513672	2.48046875	59.5605469	0	1	87.0409317	86.3149948	99.7324677	100.022606	1439.56409
03/04/03	14:30:00	250.296509	0	115.968491	15.3899679	-4.4555569	176.513672	2.48046875	59.5605469	0	1	87.0116806	87.7226715	99.7324677	100.022606	1439.56409
03/04/03	14:31:00	250.296509	0	115.968491	15.3899679	-4.4555569	176.513672	2.48046875	59.5605469	0	1	86.9970779	87.7226715	99.7324677	100.022606	1439.56409
03/04/03	14:32:00	250.296509	0	115.968491	15.8536768	-4.4555569	176.513672	2.48046875	59.5605469	0	1	88.4187317	87.7080841	99.7324677	100.022606	1439.56409
03/04/03	14:33:00	250.296509	0	115.968491	15.8114996	-4.4555569	176.513672	2.48046875	59.5605469	0	1	86.9970779	87.7080841	99.7324677	100.022606	1439.56409
03/04/03	14:34:00	250.296509	0	115.968491	15.4435596	-4.4555569	176.513672	2.48046875	59.5605469	0	1	88.3895111	87.7080841	99.7324677	100.022606	1439.56409
03/04/03	14:35:00	250.296509	0	120.386467	15.8922291	-4.4555569	176.513672	2.48046875	59.5605469	0	1	88.3895111	87.7080841	99.7324677	100.022606	1439.56409
03/04/03	14:36:00	250.296509	0	122.443237	15.4303885	-4.4555569	176.513672	2.48046875	59.5605469	0	1	88.3749237	87.6642609	99.7324677	100.022606	1439.56409
03/04/03	14:37:00	250.296509	0	122.443237	15.849391	-4.4555569	176.513672	2.48046875	59.5605469	0	1	88.3749237	87.6642609	99.7324677	100.022606	1439.56409
03/04/03	14:38:00	250.296509	0	117.906235	15.7507553	-4.4555569	176.513672	2.48046875	59.5605469	0	1	86.9532318	87.6642609	99.7324677	100.022606	1439.56409
03/04/03	14:39:00	250.296509	0	117.906235	15.7167225	-4.4555569	176.513672	2.48046875	59.5605469	0	1	88.3456955	87.6642609	99.7324677	100.022606	1439.56409
03/04/03	14:40:00	250.296509	0	117.906235	15.7167225	-4.4555569	176.513672	2.48046875	59.5605469	0	1	86.9239807	87.6642609	99.7324677	100.022606	1439.56409
03/04/03	14:41:00	250.296509	0	117.906235	15.6787815	-4.4555569	176.513672	2.48046875	59.5605469	0	1	88.3311157	87.6642609	99.7324677	100.022606	1439.56409
03/04/03	14:42:00	250.296509	0	115.722069	15.6638088	-4.4555569	176.513672	2.48046875	59.5605469	0	1	88.3311157	87.6642609	99.7324677	100.022606	1439.56409
03/04/03	14:43:00	250.296509	0	115.722069	16.0344009	-4.4555569	176.513672	2.48046875	59.0625	0	1	86.894722	87.6642609	99.7324677	100.022606	1439.56409
03/04/03	14:44:00	250.296509	0	115.722069	16.0344009	-4.4555569	176.513672	2.48046875	59.0625	0	1	88.2872391	87.6642609	99.7324677	100.022606	1439.56409
03/04/03	14:45:00	250.296509	0	115.722069	15.5594606	-4.4555569	176.513672	2.48046875	59.0625	0	1	86.9093857	87.6642609	99.7324677	100.022606	1439.56409
03/04/03	14:46:00	250.296509	0	120.20652	15.5594606	-4.4555569	176.513672	2.48046875	59.0625	0	1	86.9534073	87.6642609	99.7324677	100.022606	1439.56409
03/04/03	14:47:00	250.296509	0	122.278267	15.4446697	-4.4555569	176.513672	2.48046875	59.0625	0	1	88.4629288	87.7230072	99.7851944	100.022606	1439.56409
03/04/03	14:48:00	250.296509	0	122.278267	15.8907967	-4.4555569	176.513672	2.48046875	59.0625	0	1	87.1438522	87.7230072	99.7851944	100.022606	1439.56409
03/04/03	14:49:00	250.296509	0	117.574242	15.0090942	-4.4555569	176.513672	2.48046875	59.0625	0	1	87.1438522	88.1327209	99.4575882	100.022606	1439.56409
03/04/03	14:50:00	250.296509	0	117.574242	15.3352289	-4.4555569	176.513672	2.48046875	59.0625	0	1	87.5389175	86.8863297	99.5445938	100.022606	1439.56409
03/04/03	14:51:00	250.296509	0	117.574242	16.4596806	-4.4555569	176.513672	2.48046875	59.0625	0	1	86.2773361	88.4395676	99.5445938	100.022606	1439.56409
03/04/03	14:52:00	250.296509	0	115.47699	15.8185339	-4.4555569	176.513672	2.48046875	59.0625	0	1	87.0764389	87.0471954	99.1294556	100.022606	1439.56409
03/04/03	14:53:00	250.296509	0	115.47699	15.8696604	-4.4555569	176.513672	2.48046875	59.0625	0	1	87.0764389	87.1202698	99.1729202	99.8779068	1439.56409
03/04/03	14:54:00	250.296509	0	115.47699	15.4434586	-4.4555569	176.513672	2.48046875	59.0625	0	1	87.1494598	87.1494598	99.1729202	99.8923798	1439.56409
03/04/03	14:55:00	250.296509	0	115.47699	15.4434586	-4.4555569	176.513672	2.48046875	59.0625	0	1	87.1494598	87.1494598	99.1729202	98.4820557	1439.56409
03/04/03	14:56:00	250.296509	0	115.47699	15.7996416	-4.4555569	176.513672	2.48046875	59.0625	0	1	87.1494598	87.1494598	99.1729202	99.8923492	1439.56409
03/04/03	14:57:00	250.296509	0	119.754784	15.6885271	-4.4555569	176.513672	2.48046875	59.0625	0	1	87.1494598	87.1494598	99.1729202	99.8923492	1439.56409
03/04/03	14:58:00	250.296509	0	119.754784	15.628458	-4.4555569	176.513672	2.48046875	59.0625	0	1	87.1494598	87.1494598	99.1729202	99.8487854	1439.56409
03/04/03	14:59:00	250.296509	0	119.754784	15.7440825	-4.4555569	176.513672	2.48046875	59.0625	0	1	87.1494598	87.0908127	99.1729202	99.8487854	1439.56409
03/04/03	15:00:00	250.296509	0	119.754784	15.7440825	-4.4555569	176.513672	2.48046875	59.0625	0	96.1643295	87.1494598	87.0908127	99.1729202	99.8487854	1439.56409
03/04/03	15:01:00	250.296509	0	119.754784	15.7440825	-4.4555569	176.513672	2.48046875	59.0625	0	116.488098	87.1494598	87.0908127	99.1729202	99.8487854	1439.56409
03/04/03	15:02:00	250.296509	0	115.366905	15.4720335	-4.4555569	176.513672	2.48046875	58.5790977	0	126.2248	87.0176392	87.0908127	99.1729202	99.8487854	1439.56409
03/04/03	15:03:00	250.296509	0	115.366905	15.4720335	-4.4555569	176.513672	2.48046875	58.5790977	0	132.671936	88.424614	86.9883423	99.1729202	99.8487854	1439.56409
03/04/03	15:04:00	250.296509	0	115.366905	16.1079578	-4.4555569	176.513672	2.48046875	58.5790977	0	139.157516	86.9883423	86.9883423	99.1729202	99.8487854	1439.56409
03/04/03	15:05:00	250.296509	0	115.366905	15.6908989	-4.4555569	176.513672	2.48046875	58.5790977	0	148.986481	86.9297714	86.9444427	99.1729202	99.8487854	1439.56409
03/04/03	15:06:00	250.296509	0	115.366905	15.6908989	-4.4555569	176.513672	2.48046875	58.5790977	0	152.224167	86.9004974	86.9444427	99.1729202	99.8487854	1439.56409
03/04/03	15:07:00	250.296509	0	115.366905	15.3660898	-4.4555569	176.513672	2.48046875	58.5790977	0	148.986481	86.9004974	86.9004974	99.1729202	99.8487854	1439.56409
03/04/03	15:08:00	250.296509	0	120.363495	16.2257195	-4.4555569	176.513672	2.48046875	58.5790977	0	145.784317	88.3221893	86.9004974	99.1729202	99.8487854	1439.56409
03/04/03	15:09:00	250.296509	0	120.363495	15.3037214	-4.4555569	176.513672	2.48046875	58.5790977	0	145.784317	86.8565369	86.9004974	99.1729202	99.8487854	1439.56409
03/04/03	15:10:00	250.296509	0	120.363495	15.4479418	-4.4555569	176.513672	2.48046875	58.5790977	0	142.509705	88.2783279	86.9004974	99.1729202	99.8487854	1439.56409
03/04/03	15:11:00	250.296509	0	116.030525	15.7297134	-4.4555569	176.513672	2.48046875	58.5790977	0	139.157516	88.2636948	86.9004974	99.1729202	99.8487854	1439.56409
03/04/03	15:12:00	250.296509	0	116.030525	15.7297134	-4.4555569	176.513672	2.48046875	58.5790977	0	139.157516	86.8272476	86.8272476	99.1729202	99.8487854	1439.56409
03/04/03	15:13:00	250.296509	0	116.030525	15.4293356	-4.4555569	176.513672	2.48046875	58.5790977	0	139.157516	88.2344284	86.8125992	99.1729202	99.8487854	1439.56409
03/04/03	15:14:00	250.296509	0	116.030525	15.4036913	-4.4555569	176.513672	2.48046875	58.5790977	0	142.509705	88.2051773	87.4944305	99.1729202	99.8487854	1439.56409

DATE	TIME	MBEL100 Excitation Losses KW	BATI013 AH Gas Outlet Temp DEG F	BAAI046 Excess Oxygen PCT	RMAT500 Relative Humidity PCT	BATI011 AH Air Inlet Temp DEG F	JCFT152 Coal Fdr A Flow Rate KPPH	JCFT252 Coal Fdr B Flow Rate KPPH	JCFT352 Coal Fdr C Flow Rate KPPH	JCFT452 Coal Fdr D Flow Rate KPPH	NAET102 13.8 Kv NAA01 Aux Scr Volts VOLTS	NAET202 13.8 Kv NAAO2 Aux Scr Volts VOLTS	NAIT101 13.8 Kv NAAO1 Aux Scr Current AMPS	NAIT201 13.8 Kv NAA02 Aux Scr Current AMPS	MAII006A Generator Arm Current Phase A KA	MAII006B Generator Arm Current Phase B KA
03/04/03	14:14:00	585.394714	262.987396	3.99645901	20.9289532	106.889542	72.1337814	0.06042493	72.7716064	-0.0067153	13616.4551	13885.6191	721.362305	378.222687	4.65234327	4.69628859
03/04/03	14:15:00	585.394714	262.987396	3.99645901	19.5861797	106.889542	70.3881836	0.06042493	70.723877	-0.0067153	13616.4551	13885.6191	721.362305	378.588837	4.65234327	4.69628859
03/04/03	14:16:00	585.394714	262.987396	3.99645901	18.5180645	106.889542	74.6179199	0.06042493	76.6992188	-0.0067153	13616.4551	13885.6191	721.362305	378.588837	4.65234327	4.69628859
03/04/03	14:17:00	585.394714	262.987396	3.99645901	17.3889141	106.889542	75.7592773	0.06042493	75.1885986	-0.0067153	13616.4551	13885.6191	721.362305	378.588837	4.65234327	4.69628859
03/04/03	14:18:00	585.394714	262.987396	4.25000763	16.0461426	106.889542	81.6003418	0.06042493	81.2982178	-0.0067153	13616.4551	13885.6191	708.911133	378.588837	4.65234327	4.69628859
03/04/03	14:19:00	585.394714	262.987396	3.99279881	17.0532227	106.889542	81.6339035	0.06042493	81.6003418	-0.0067153	13616.4551	13885.6191	720.996033	378.588837	4.65234327	4.69628859
03/04/03	14:20:00	585.394714	262.987396	3.99279881	19.0979004	106.889542	78.3105392	0.06042493	77.9412842	-0.0067153	13616.4551	13885.6191	720.996033	378.588837	4.65234327	4.69628859
03/04/03	14:21:00	585.394714	262.987396	3.73450541	20.4711895	106.889542	72.0666504	0.06042493	72.6037598	-0.0067153	13616.4551	13885.6191	720.996033	378.588837	4.65234327	4.69628859
03/04/03	14:22:00	585.394714	262.987396	3.99759197	15.588377	106.889542	80.1232834	0.06042493	80.526123	-0.0067153	13616.4551	13885.6191	720.996033	378.588837	4.65234327	4.69628859
03/04/03	14:23:00	585.394714	262.987396	3.74607396	13.2385244	106.889542	79.7204514	0.06042493	77.8070068	-0.0067153	13616.4551	13885.6191	720.996033	391.040009	4.65234327	4.69628859
03/04/03	14:24:00	585.394714	262.987396	3.23635483	12.2009268	106.889542	69.8510742	0.06042493	69.6160889	-0.0067153	13616.4551	13885.6191	720.996033	391.040009	4.65234327	4.69628859
03/04/03	14:25:00	585.394714	262.987396	4.01516342	13.3605947	106.889542	77.3370361	0.06042493	77.4041748	-0.0067153	13616.4551	13885.6191	720.996033	391.040009	4.65234327	4.69628859
03/04/03	14:26:00	585.394714	262.987396	3.752841	17.6025391	106.889542	77.4041748	0.06042493	78.6126633	-0.0067153	13616.4551	13885.6191	720.629822	391.040009	4.65234327	4.69628859
03/04/03	14:27:00	585.394714	262.987396	3.76298547	17.8771954	106.889542	71.3616867	0.06042493	71.1938477	-0.0067153	13616.4551	13885.6191	720.629822	378.588837	4.65234327	4.69628859
03/04/03	14:28:00	585.394714	262.987396	3.48411298	14.5812969	106.889542	67.3669434	0.06042493	67.5012207	-0.0067153	13616.4551	13885.6191	720.629822	375.292999	4.65234327	4.69628859
03/04/03	14:29:00	585.394714	262.987396	4.02883387	14.5812969	106.889542	72.3352051	0.06042493	71.6638184	-0.0067153	13616.4551	13885.6191	720.629822	375.292999	4.65234327	4.69628859
03/04/03	14:30:00	585.394714	262.987396	4.02374601	15.6799316	106.889542	78.4112549	0.06042493	79.1497726	-0.0067153	13616.4551	13885.6191	720.629822	372.729462	4.65234327	4.69628859
03/04/03	14:31:00	585.394714	262.987396	3.75329018	16.9006329	106.889542	76.0949631	0.06042493	75.5578537	-0.0067153	13616.4551	13885.6191	720.629822	385.180634	4.65234327	4.69628859
03/04/03	14:32:00	585.394714	262.987396	3.75674462	10.3393555	106.889542	71.5631104	0.06042493	71.3281174	-0.0067153	13687.8662	13885.6191	720.629822	385.180634	4.65234327	4.69628859
03/04/03	14:33:00	585.394714	262.987396	3.72602844	8.11157036	106.889542	75.0878906	0.06042493	76.229248	-0.0067153	13687.8662	13885.6191	720.629822	385.180634	4.65234327	4.69628859
03/04/03	14:34:00	585.394714	262.987396	4.01405096	8.11157036	106.889542	82.7081223	0.06042493	83.1109619	-0.0067153	13687.8662	13885.6191	708.544861	385.180634	4.65234327	4.69628859
03/04/03	14:35:00	585.394714	262.987396	3.76053429	9.39330864	106.889542	81.3317795	0.06042493	81.8353271	-0.0067153	13687.8662	13885.6191	708.544861	385.180634	4.65234327	4.69628859
03/04/03	14:36:00	585.394714	262.987396	3.75605011	11.4379873	106.889542	74.4836426	0.06042493	75.0878906	-0.0067153	13687.8662	13885.6191	720.629822	373.095673	4.65234327	4.69628859
03/04/03	14:37:00	585.394714	262.987396	3.75605011	12.9638662	106.889542	80.4254074	0.06042493	79.8547363	-0.0067153	13687.8662	13885.6191	721.362305	373.095673	4.65234327	4.69628859
03/04/03	14:38:00	585.394714	262.987396	3.75605011	14.0624981	106.889542	83.4466553	0.06042493	84.0509033	-0.0067153	13687.8662	13885.6191	721.362305	370.532196	4.65234327	4.69628859
03/04/03	14:39:00	585.394714	262.987396	3.75605011	14.0624981	106.889542	81.6003418	0.06042493	81.2646408	-0.0067153	13687.8662	13885.6191	721.362305	387.37796	4.65234327	4.69628859
03/04/03	14:40:00	585.394714	262.987396	3.49578381	14.1540527	106.889542	73.4094238	0.06042493	73.2080078	-0.0067153	13687.8662	13885.6191	721.362305	393.603455	4.65234327	4.69628859
03/04/03	14:41:00	585.394714	262.987396	3.76135206	10.9191875	106.889542	79.2169189	0.06042493	80.1232834	-0.0067153	13687.8662	13885.6191	721.362305	393.603455	4.65234327	4.69628859
03/04/03	14:42:00	585.394714	262.987396	3.76135206	10.9497061	106.889542	80.0561523	0.06042493	80.8618088	-0.0067153	13687.8662	13885.6191	708.17865	393.603455	4.65234327	4.69628859
03/04/03	14:43:00	585.394714	262.987396	3.5021925	13.0249023	106.889542	69.4482422	0.06042493	69.6160889	-0.0067153	13687.8662	13885.6191	708.17865	380.419922	4.65234327	4.69628859
03/04/03	14:44:00	585.394714	262.987396	3.77002501	13.0249023	106.889542	67.0983887	0.06042493	67.4005051	-0.0067153	13687.8662	13885.6191	708.17865	380.419922	4.65234327	4.69628859
03/04/03	14:45:00	585.394714	262.987396	4.04033852	9.97314453	106.889542	74.2150879	0.06042493	72.4694748	-0.0067153	13687.8662	13885.6191	708.17865	380.419922	4.65234327	4.69628859
03/04/03	14:46:00	585.394714	262.987396	4.03958368	10.0646963	106.889542	78.1427002	0.06042493	77.8741455	-0.0067153	13687.8662	13885.6191	708.17865	366.503876	4.65234327	4.69628859
03/04/03	14:47:00	585.394714	262.987396	4.05312014	8.99658012	106.889542	75.6921387	0.06042493	74.2822266	-0.0067153	13687.8662	13885.6191	708.17865	366.503876	4.65234327	4.69628859
03/04/03	14:48:00	585.394714	262.987396	3.77628183	6.61620998	106.889542	72.0330811	0.06042493	72.6037598	-0.0067153	13687.8662	13885.6191	708.17865	382.617157	4.65234327	4.69628859
03/04/03	14:49:00	585.394714	262.987396	4.0330019	5.60912991	106.889542	80.223999	0.06042493	79.5526123	-0.0067153	13687.8662	13885.6191	708.17865	382.617157	4.65234327	4.69628859
03/04/03	14:50:00	585.394714	262.987396	3.77138281	4.41894341	106.889542	79.7875977	0.06042493	78.3776855	-0.0067153	13687.8662	13885.6191	708.17865	382.617157	4.65234327	4.69628859
03/04/03	14:51:00	585.394714	262.987396	4.02484846	6.61620998	106.889542	73.0401535	0.06042493	71.6638184	-0.0067153	13687.8662	13885.6191	708.17865	382.617157	4.65234327	4.69628859
03/04/03	14:52:00	585.394714	262.987396	3.76986361	8.78295803	106.889542	69.9853516	0.06042493	68.8104172	-0.0067153	13687.8662	13885.6191	708.17865	382.617157	4.65234327	4.69628859
03/04/03	14:53:00	585.394714	262.987396	4.04497099	6.64672804	106.889542	75.6921387	0.06042493	76.7663574	-0.0067153	13687.8662	13885.6191	708.17865	382.617157	4.65234327	4.69628859
03/04/03	14:54:00	585.394714	262.987396	4.07308149	7.86743021	106.889542	84.9236984	0.06042493	83.815918	-0.0067153	13687.8662	13885.6191	708.17865	382.617157	4.65234327	4.69628859
03/04/03	14:55:00	585.394714	262.987396	3.54739714	9.942626	106.889542	76.6656418	0.06042493	77.3706055	-0.0067153	13687.8662	13885.6191	708.17865	366.870087	4.65234327	4.69628859
03/04/03	14:56:00	585.394714	262.987396	3.56352758	9.942626	106.889542	74.5172119	0.06042493	74.4164963	-0.0067153	13687.8662	13885.6191	708.17865	382.617157	4.65234327	4.69628859
03/04/03	14:57:00	585.394714	262.987396	3.83645844	5.57861185	106.889542	78.5455322	0.06042493	78.3441086	-0.0067153	13687.8662	13885.6191	708.17865	382.617157	4.65234327	4.69628859
03/04/03	14:58:00	585.394714	262.987396	3.82223248	5.42602348	106.889542	79.8547363	0.06042493	80.324707	-0.0067153	13687.8662	13885.6191	708.17865	382.617157	4.65234327	4.69628859
03/04/03	14:59:00	585.394714	262.987396	3.5651865	5.39550781	106.889542	73.5772629	0.06042493	73.3422852	-0.0067153	13687.8662	13885.6191	708.17865	382.617157	4.65234327	4.69628859
03/04/03	15:00:00	585.394714	262.987396	3.84815574	7.40966749	106.889542	72.7044601	0.06042493	73.6108398	-0.0067153	13687.8662	13885.6191	708.17865	382.617157	4.65234327	4.69628859
03/04/03	15:01:00	585.394714	262.987396	4.11183453	7.40966749	106.889542	81.5667648	0.06042493	82.1038742	-0.0067153	13687.8662	13885.6191	708.17865	369.799774	4.65234327	4.69628859
03/04/03	15:02:00	585.394714	262.987396	3.86879706	8.59985447	106.889542	82.6074219	0.06042493	81.8353271	-0.0067153	13687.8662	13885.6191	708.17865	385.546844	4.65234327	4.69628859
03/04/03	15:03:00	585.394714	262.987396	3.86147022	8.203125	106.889542	77.8741455	0.06042493	77.6391602	-0.0067153	13687.8662	13885.6191	708.17865	371.630859	4.65234327	4.69628859
03/04/03	15:04:00	585.394714	262.987396	3.58588552	10.4309072	106.889542	72.5701904	0.06042493	70.1867599	-0.0067153	13687.8662	13885.6191	708.17865	359.545898	4.65234327	4.69628859
03/04/03	15:05:00	585.394714	262.987396	3.85820627	9.39330864	106.889542	73.0737305	0.06042493	72.3687744	-0.0067153	13687.8662	13885.6191	708.17865	377.856445	4.65234327	4.69628859
03/04/03	15:06:00	585.394714	262.987396	4.13025379	5.94482231	106.889542	80.526123	0.06042493	80.8282471	-0.0067153	13687.8662	13885.6191	708.17865	391.406219	4.65234327	4.69628859
03/04/03	15:07:00	585.394714	262.987396	3.8672986	8.99658012	106.889542	74.5172119	0.06042493	73.6108398	-0.0067153	13687.8662	13885.6191	708.17865	391.406219	4.65234327	4.69628859
03/04/03	15:08:00	585.394714	262.987396	3.8672986	10.0646963	106.889542	68.9447021	0.06042493	68.5754395	-0.0067153	13687.8662	13885.6191	708.17865	391.406219	4.65234327	4.69628859
03/04/03	15:09:00	585.394714	262.987396	4.13529825	8.99658012	106.889542	69.1461182	0.06042493	72.0330811	-0.0067153	13687.8662	13885.6191	708.17865	379.321259	4.65234327	4.69628859
03/04/03	15:10:00	585.394714	262.987396	4.13808012	6.46362162	106.889542	74.6179199	0.06042493	73.6108398	-0.0067153	13687.8662	13885.6191	708.17865	379.321259	4.65234327	4.69628859
03/04/03	15:11:00	585.394714	262.987396	4.11888981	6.46362162	106.889542	79.0490723	0.06042493	77.1020508	-0.0067153	13687.8662	13885.6191	708.17865	379.321259	4.65234327	4.69628859
03/04/03	15:12:00	585.394714	262.987396	3.86261368	6.46362162	106.889542	69.8846436	0.06042493	69.8846436	-0.0067153	13687.8662	13885.6191	708.17865	363.940399	4.65234327	4.69628859
03/04/03	15:13:00	585.394714	262.987396	3.61857677	4.35790968	106.889542	66.8969727	0.06042493	67.6690598	-0.0067153	13687.8662	13885.6191	708.17865	363.940399	4.65234327	4.69628859
03/04/03	15:14:00	585.394714	262.987396	4.15098524	3.19824147	106.889542	81.0632324	0.06042493	80.0897217	-0.0067153	13687.8662	13885.6191	708.17865	382.250946	4.65234327	4.69628859

		MAII006C	RMTT500	ADFI001	ADLT001	TSTMFLO	BAFI002	REAI001	BAAI052	BATE055	BATI020		AEFY136
		Generator	Ambient	Cond Xfer	Condenser	Total Stm	Total Air	CEMS	Boiler CO	SCR	AH Air		Fisher FW
		Arm Current	Temp	Flow	Hotwell	Flow	Flow	CO2		Outlet	Outlet		Valve
		Phase C		Calculated	Level					Temp.	Temp.		Demand
DATE	TIME	KA	DEG F	KPPH	IN	KPPH	KPPH	%	PPM	DEG F	DEG F		%
03/04/03	14:14:00	4.9453125	85.6811523	132.97554	47.9882813	1446.10693	2032.72253	11.2841797	0	632.355469	545.385925	0	42.8786201
03/04/03	14:15:00	4.9453125	85.6811523	134.004288	47.9882813	1446.10693	2032.72253	11.2902822	0	632.355469	545.385925	0	42.8786201
03/04/03	14:16:00	4.9453125	85.6811523	145.595734	47.5048828	1446.10693	2032.72253	11.2841797	0	632.355469	545.385925	0	42.8728561
03/04/03	14:17:00	4.9453125	85.6811523	157.642242	47.5048828	1446.10693	2032.72253	11.4916983	0	632.355469	545.385925	0	43.9914627
03/04/03	14:18:00	4.9453125	85.6811523	157.729324	47.5048828	1446.10693	2032.72253	11.2902822	0	632.355469	545.385925	0	42.9519196
03/04/03	14:19:00	4.9453125	85.6811523	158.424332	47.5048828	1446.10693	2033.1825	11.3879385	0	632.355469	545.385925	0	42.9474525
03/04/03	14:20:00	4.9453125	85.6811523	167.360809	47.0068359	1446.10693	2033.4043	11.3879385	0	632.355469	545.385925	0	43.2356033
03/04/03	14:21:00	4.9453125	85.6811523	168.505676	47.0068359	1446.10693	2031.86646	11.3879385	0	632.355469	545.385925	0	43.2030334
03/04/03	14:22:00	4.9453125	85.6811523	171.334366	47.0068359	1446.10693	1994.36401	11.394042	0	632.355469	545.385925	0	42.0695267
03/04/03	14:23:00	4.9453125	85.6811523	156.943771	47.0068359	1446.10693	1994.36401	11.394042	0	632.355469	545.385925	0	42.0695267
03/04/03	14:24:00	4.9453125	85.6811523	160.576813	47.0068359	1446.10693	2032.09607	11.5893555	0	632.355469	545.385925	0	43.0636101
03/04/03	14:25:00	4.9453125	85.6811523	153.582687	47.0068359	1446.10693	1995.04089	11.5893555	0	632.355469	545.385925	0	40.823185
03/04/03	14:26:00	4.9453125	85.6811523	155.183853	47.0068359	1446.10693	1996.66638	11.5893555	0	632.355469	545.385925	0	41.8960876
03/04/03	14:27:00	4.9453125	85.6811523	155.095337	47.0068359	1446.10693	2032.93762	11.5893555	0	632.355469	545.385925	0	42.893074
03/04/03	14:28:00	4.9453125	85.6811523	158.77066	47.0068359	1446.10693	2032.93762	11.7907715	0	632.355469	545.385925	0	42.6981888
03/04/03	14:29:00	4.9453125	85.6811523	160.234344	47.0068359	1446.10693	1997.13916	11.5893555	0	632.355469	545.385925	0	41.5096359
03/04/03	14:30:00	4.9453125	85.6811523	157.555084	47.0068359	1446.10693	1994.05151	11.3879385	0	632.355469	545.385925	0	41.432766
03/04/03	14:31:00	4.9453125	85.6811523	159.288818	47.0068359	1446.10693	1994.05151	11.3879385	0	632.355469	545.385925	0	41.9589996
03/04/03	14:32:00	4.9453125	85.6811523	165.545761	47.0068359	1446.10693	2031.09106	11.3879385	0	632.355469	545.385925	0	43.1018753
03/04/03	14:33:00	4.9453125	85.6811523	174.746964	47.0068359	1446.10693	1995.66992	11.3879385	0	632.355469	545.385925	0	42.0112228
03/04/03	14:34:00	4.9453125	85.6811523	172.05423	47.0068359	1446.10693	1998.54712	11.3879385	0	632.355469	545.385925	0	42.0456352
03/04/03	14:35:00	4.9453125	85.6811523	169.966309	47.0068359	1446.10693	2000.70752	11.3879385	0	632.355469	545.385925	0	43.115284
03/04/03	14:36:00	4.9453125	85.6811523	166.785431	47.0068359	1446.10693	2000.70752	11.5893555	0	632.355469	545.385925	0	42.0595703
03/04/03	14:37:00	4.9453125	85.6811523	164.96405	47.0068359	1446.10693	2037.31458	11.3879385	0	632.355469	545.385925	0	42.1956635
03/04/03	14:38:00	4.9453125	85.6811523	165.130447	47.0068359	1446.10693	1996.51233	11.3879385	0	632.355469	545.385925	0	42.1956635
03/04/03	14:39:00	4.9453125	87.2680664	164.547272	47.0068359	1446.10693	2031.94934	11.394042	0	632.355469	545.385925	0	43.2931557
03/04/03	14:40:00	4.9453125	87.2680664	167.032288	47.0068359	1446.10693	2029.24841	11.595458	0	632.355469	545.385925	0	43.3215408
03/04/03	14:41:00	4.9453125	87.2680664	176.700729	47.0068359	1446.10693	2029.24841	11.5893555	0	632.355469	545.385925	0	41.1452446
03/04/03	14:42:00	4.9453125	87.2680664	177.088882	47.0068359	1446.10693	2029.24841	11.5893555	0	632.355469	545.385925	0	42.3640099
03/04/03	14:43:00	4.9453125	87.2680664	160.576813	47.0068359	1446.10693	2026.4729	11.5893555	0	632.355469	545.385925	0	43.2291985
03/04/03	14:44:00	4.9453125	87.2680664	162.193604	47.0068359	1446.10693	2026.4729	11.5893555	0	632.355469	545.385925	0	42.2557678
03/04/03	14:45:00	4.9453125	87.2680664	155.006775	47.0068359	1446.10693	1985.73169	11.5893555	0	632.355469	545.385925	0	39.8145828
03/04/03	14:46:00	4.9453125	87.2680664	158.164063	47.0068359	1446.10693	1991.81921	11.5893555	0	632.355469	545.385925	0	40.7793579
03/04/03	14:47:00	4.9453125	87.2680664	157.642242	47.0068359	1446.10693	2027.38281	11.5893555	0	632.355469	545.385925	0	42.9646339
03/04/03	14:48:00	4.9453125	87.2680664	157.816376	47.0068359	1446.10693	2024.23938	11.5893555	0	632.355469	545.385925	0	42.9719391
03/04/03	14:49:00	4.9453125	87.2680664	157.990295	47.0068359	1446.10693	2025.44641	11.3879385	0	632.355469	545.385925	0	41.8229103
03/04/03	14:50:00	4.9453125	87.2680664	162.193604	47.0068359	1446.10693	2025.24158	11.3879385	0	632.355469	545.385925	0	42.7976303
03/04/03	14:51:00	4.9453125	87.2680664	157.03125	47.0068359	1446.10693	2025.24158	11.5893555	0	632.355469	545.385925	0	43.897068
03/04/03	14:52:00	4.9453125	87.2680664	171.894516	47.0068359	1446.10693	2028.62341	11.583252	0	632.355469	545.385925	0	43.809021
03/04/03	14:53:00	4.9453125	87.2680664	180.011597	47.0068359	1446.10693	1989.80151	11.583252	0	632.355469	545.385925	0	41.7226563
03/04/03	14:54:00	4.9453125	87.2680664	159.977036	47.0068359	1446.10693	1987.91785	11.3818359	0	632.355469	545.385925	0	41.7363167
03/04/03	14:55:00	4.9453125	87.2680664	154.651978	47.0068359	1446.10693	2025.37268	11.5893555	0	632.355469	545.385925	0	42.791008
03/04/03	14:56:00	4.9453125	87.2680664	155.360748	47.4902344	1446.10693	2026.08105	11.5893555	0	632.355469	545.385925	0	42.7907219
03/04/03	14:57:00	4.9453125	87.2680664	149.596619	47.4902344	1446.10693	2025.97449	11.5893555	0	632.355469	545.385925	0	41.6615906
03/04/03	14:58:00	4.9453125	87.2680664	137.444504	47.4902344	1446.10693	1991.22876	11.3879385	0	632.355469	545.385925	0	41.729641
03/04/03	14:59:00	4.9453125	87.2680664	133.181915	47.4902344	1446.10693	2032.11633	11.4916983	0	632.355469	545.385925	0	42.8390083
03/04/03	15:00:00	4.9453125	87.2680664	138.836273	47.4902344	1446.10693	2029.66443	11.4916983	0	632.355469	545.385925	0	42.9972191
03/04/03	15:01:00	4.9453125	87.2680664	142.545471	47.4902344	1446.10693	2028.86963	11.583252	0	632.355469	545.385925	0	41.9665451
03/04/03	15:02:00	4.9453125	87.2680664	148.860413	47.4902344	1446.10693	1991.51978	11.4916983	0	632.355469	545.385925	0	43.2214966
03/04/03	15:03:00	4.9453125	87.2680664	147.563202	47.4902344	1446.10693	2027.93298	11.4916983	0	632.355469	545.385925	0	42.2120705
03/04/03	15:04:00	4.9453125	87.2680664	151.23999	47.4902344	1446.10693	2037.58728	11.6931143	0	632.355469	545.385925	0	43.2407913
03/04/03	15:05:00	4.9453125	87.2680664	155.890198	47.4902344	1446.10693	2039.29492	11.4916983	0	632.355469	545.385925	0	41.8094559
03/04/03	15:06:00	4.9453125	87.2680664	150.511826	47.4902344	1446.10693	2003.03369	11.4001455	0	632.355469	545.385925	0	41.8514442
03/04/03	15:07:00	4.9453125	87.2680664	151.23999	47.4902344	1446.10693	2003.8269	11.394042	0	632.355469	545.385925	0	42.8904533
03/04/03	15:08:00	4.9453125	87.2680664	152.055008	47.4902344	1446.10693	2039.78076	11.5893555	0	632.355469	545.385925	0	42.8904533
03/04/03	15:09:00	4.9453125	87.2680664	148.027817	47.4902344	1446.10693	2044.51489	11.595458	0	632.355469	545.385925	0	43.0197945
03/04/03	15:10:00	4.9453125	87.2680664	153.314224	47.4902344	1446.10693	2009.93262	11.595458	0	632.355469	545.385925	0	41.904438
03/04/03	15:11:00	4.9453125	87.2680664	156.154266	47.4902344	1446.10693	2009.93262	11.5893555	0	632.355469	545.385925	0	42.1058807
03/04/03	15:12:00	4.9453125	87.2680664	157.118683	47.4902344	1446.10693	2009.93262	11.5893555	0	632.355469	545.385925	0	44.2420769
03/04/03	15:13:00	4.9453125	87.2680664	156.154266	47.0068359	1446.10693	2043.38232	11.6870117	0	632.355469	545.385925	0	44.323761
03/04/03	15:14:00	4.9453125	87.2680664	160.40567	47.0068359	1446.10693	2008.92749	11.4916983	0	632.355469	545.385925	0	42.2172432

DATE	TIME	MAJI007 Generator Megawatts MW	MAJI008 Generator Megavars MVAR	NAJT101 13.8 kv NAA01 Gen Aux Load MW	NAJT201 13.8 kv NAA02 Gen Aux Load MW	AEFI135 FW Flow Comp. KPPH	AEFI131 SH Spray Flow KPPH	FDFI002 Sootblower Steam Flow KPPH	FDFI022 SCR Sootblower Stm Flow KPPH	AAFY018A Cont. Blowdown Flow PCT	FBFI021 MS to Aux Stm. Flow KPPH	AETE137 Feedwater Temp. DEG F	AAPTOO6 Selected Drum Pressure PSIG	FDPT002 Sootblower Steam Pressure PSIG	FDTT002 Sootblower Steam Temp. DEG F	FDPT022 A.H. Sootblower Stm. Press PSIG
03/04/03	15:15:00	194.519028	20.1659851	13.7677002	7.61535645	1428.96484	46.7007561	0	2.05734634	0	0	429.286896	2473.54102	315.795868	619.567871	382.93457
03/04/03	15:16:00	194.519028	20.1659851	13.7677002	7.61535645	1437.43396	67.3702698	0	2.05734634	0	0	429.286896	2473.54102	315.795868	619.567871	382.93457
03/04/03	15:17:00	194.519028	20.1659851	13.7677002	7.61535645	1374.65002	79.1517334	0	2.05734634	0	0	429.286896	2473.54102	315.795868	619.567871	382.93457
03/04/03	15:18:00	194.519028	20.1659851	13.7677002	7.5970459	1406.26733	45.7903023	0	2.05734634	0	0	429.286896	2473.54102	315.795868	619.567871	382.93457
03/04/03	15:19:00	194.519028	20.1659851	13.7677002	7.02941895	1440.47595	45.7903023	0	2.05734634	0	0	429.286896	2473.54102	315.795868	619.567871	382.93457
03/04/03	15:20:00	194.519028	20.1659851	13.7677002	6.99279785	1369.3833	73.9258499	0	2.05734634	0	0	429.286896	2473.54102	315.795868	619.567871	382.93457
03/04/03	15:21:00	194.519028	20.1659851	13.7677002	7.1209712	1400.08276	60.8003654	0	2.05734634	0	0	429.286896	2473.54102	315.795868	619.567871	382.93457
03/04/03	15:22:00	194.519028	20.1659851	13.7677002	6.90124464	1405.26428	84.801384	0	2.05734634	0	0	429.286896	2473.54102	315.795868	619.567871	382.93457
03/04/03	15:23:00	194.519028	20.1659851	13.7677002	7.63366604	1406.61731	45.7903023	0	2.05734634	0	0	429.286896	2473.54102	315.795868	629.638672	382.93457
03/04/03	15:24:00	194.519028	20.1659851	13.7677002	7.63366604	1399.42114	47.1493912	0	2.05734634	0	0	429.286896	2473.54102	315.795868	629.638672	382.93457
03/04/03	15:25:00	194.519028	20.1659851	13.7677002	7.63366604	1399.42114	72.7778702	0	2.05734634	0	0	429.286896	2473.54102	315.795868	629.638672	382.93457
03/04/03	15:26:00	194.519028	20.1659851	13.7677002	7.63366604	1399.42114	68.3012924	0	2.05734634	0	0	429.286896	2473.54102	315.795868	629.638672	382.93457
03/04/03	15:27:00	194.519028	20.1659851	13.7677002	7.63366604	1399.42114	90.0974579	0	2.05734634	0	0	429.286896	2473.54102	315.795868	629.638672	382.93457
03/04/03	15:28:00	194.519028	20.1659851	13.7677002	7.3132329	1432.55249	78.6180038	0	2.05734634	0	0	429.286896	2473.54102	315.795868	629.638672	382.93457
03/04/03	15:29:00	194.519028	20.1659851	13.7768555	7.51464796	1437.62048	46.7007561	0	2.05734634	0	0	429.286896	2473.54102	315.795868	639.709473	382.93457
03/04/03	15:30:00	194.519028	20.1659851	14.1064453	7.64282131	1404.64148	47.5937576	0	2.05734634	0	0	429.286896	2473.54102	315.795868	639.709473	382.93457
03/04/03	15:31:00	194.519028	20.1659851	14.1064453	7.08435011	1402.99597	68.9149628	0	2.05734634	0	0	429.286896	2473.54102	315.795868	639.709473	382.93457
03/04/03	15:32:00	194.519028	20.1659851	13.7768555	7.08435011	1368.87183	54.9820862	0	2.05734634	0	0	429.286896	2473.54102	315.795868	639.709473	382.93457
03/04/03	15:33:00	194.519028	20.1659851	13.7768555	7.42309523	1372.78271	84.0533447	0	2.05734634	0	0	429.286896	2473.54102	315.795868	639.709473	382.93457
03/04/03	15:34:00	194.519028	20.1659851	13.7768555	7.72521877	1380.15356	91.258255	0	2.05734634	0	0	429.286896	2473.54102	315.795868	639.709473	382.93457
03/04/03	15:35:00	194.519028	20.1659851	13.7768555	7.72521877	1410.25647	46.7007561	0	2.05734634	0	0	429.286896	2473.54102	315.795868	639.709473	382.93457
03/04/03	15:36:00	194.519028	20.1659851	13.7768555	7.72521877	1410.25647	46.7007561	0	2.05734634	0	0	429.286896	2473.54102	315.795868	639.709473	382.93457
03/04/03	15:37:00	194.519028	20.1659851	13.7768555	7.42309523	1413.35693	48.9027481	0	2.05734634	0	0	429.286896	2473.54102	315.795868	639.709473	382.93457
03/04/03	15:38:00	194.519028	20.1659851	13.7768555	7.42309523	1420.52637	70.7240753	0	2.05734634	0	0	429.286896	2473.54102	315.795868	639.709473	382.93457
03/04/03	15:39:00	194.519028	20.1659851	14.0789795	7.65197706	1384.02673	67.9923782	0	2.05734634	0	0	429.286896	2473.54102	315.795868	639.709473	382.93457
03/04/03	15:40:00	194.519028	20.1659851	14.0789795	7.6245122	1425.24731	79.6818924	0	2.05734634	0	0	429.286896	2473.54102	315.795868	639.709473	382.93457
03/04/03	15:41:00	194.519028	20.1659851	13.7768555	7.22167969	1432.7384	85.2964401	0	2.05734634	0	0	429.286896	2473.54102	315.795868	639.709473	382.93457
03/04/03	15:42:00	194.519028	20.1659851	13.7768555	7.54211473	1407.89514	47.1493912	0	2.05734634	0	0	429.286896	2473.54102	315.795868	639.709473	382.93457
03/04/03	15:43:00	194.519028	20.1659851	13.7768555	7.54211473	1407.89514	45.7903023	0	2.05734634	0	0	429.286896	2473.54102	315.795868	639.709473	382.93457
03/04/03	15:44:00	194.519028	20.1659851	13.7768555	7.54211473	1407.89514	70.4257736	0	2.05734634	0	0	429.286896	2473.54102	315.795868	639.709473	382.93457
03/04/03	15:45:00	194.519028	20.1659851	13.7768555	7.54211473	1407.89514	67.0570908	0	2.05734634	0	0	429.286896	2473.54102	315.795868	639.709473	382.93457
03/04/03	15:46:00	194.519028	20.1659851	13.7768555	7.11181641	1407.89514	73.6405258	0	2.05734634	0	0	429.286896	2473.54102	315.795868	639.709473	382.93457
03/04/03	15:47:00	194.519028	20.1659851	13.7768555	7.60620117	1439.39282	84.801384	0	2.05734634	0	0	429.286896	2473.54102	315.795868	639.709473	382.93457
03/04/03	15:48:00	194.519028	20.1659851	13.7768555	7.21252394	1439.39282	76.9945984	0	2.05734634	0	0	429.286896	2473.54102	315.795868	639.709473	382.93457
03/04/03	15:49:00	194.519028	20.1659851	13.7768555	7.6245122	1439.39282	46.2477722	0	2.05734634	0	0	429.286896	2473.54102	315.795868	639.709473	382.93457
03/04/03	15:50:00	194.519028	20.1659851	13.7768555	7.03857422	1405.81384	47.5937576	0	2.05734634	0	0	429.286896	2473.54102	315.795868	639.709473	382.93457
03/04/03	15:51:00	194.519028	20.1659851	13.7768555	7.72521877	1405.81384	69.5232391	0	2.05734634	0	0	429.286896	2473.54102	315.795868	639.709473	382.93457
03/04/03	15:52:00	194.519028	20.1659851	13.7768555	7.72521877	1372.85242	66.1085434	0	2.05734634	0	0	429.286896	2473.54102	315.795868	639.709473	382.93457
03/04/03	15:53:00	194.519028	20.1659851	13.7768555	7.72521877	1372.85242	90.5635529	0	2.05734634	0	0	429.286896	2473.54102	315.795868	639.709473	382.93457
03/04/03	15:54:00	194.519028	20.1659851	13.7402334	7.72521877	1414.01733	82.7915802	0	2.05734634	0	0	429.286896	2473.54102	315.795868	639.709473	382.93457
03/04/03	15:55:00	194.519028	20.1659851	14.0423574	7.39563036	1414.01733	46.7007561	0	2.05734634	0	0	429.286896	2473.54102	315.795868	639.709473	382.93457
03/04/03	15:56:00	194.519028	20.1659851	14.0423574	7.4597168	1414.01733	46.7007561	0	2.05734634	0	0	429.286896	2473.54102	315.795868	639.709473	382.93457
03/04/03	15:57:00	194.519028	20.1659851	13.996582	7.11181641	1415.04846	68.3012924	0	2.05734634	0	0	429.286896	2473.54102	315.795868	639.709473	382.93457
03/04/03	15:58:00	194.519028	20.1659851	13.996582	7.7160635	1377.06494	70.7240753	0	2.05734634	0	0	429.286896	2473.54102	315.795868	639.709473	382.93457
03/04/03	15:59:00	194.519028	20.1659851	13.996582	7.18505764	1408.51294	73.6405258	0	2.05734634	0	0	429.286896	2473.54102	315.795868	639.709473	382.93457
03/04/03	16:00:00	194.519028	20.1659851	13.996582	7.5970459	1442.41418	86.5216599	0	2.05734634	0	0	429.286896	2473.54102	315.795868	639.709473	382.93457
03/04/03	16:00:00	194.519028	20.1659851	13.996582	7.5970459	1442.41418	86.5216599	0	2.05734634	0	0	429.286896	2473.54102	315.795868	639.709473	382.93457
03/04/03	16:01:00	194.519028	20.1659851	13.996582	7.5970459	1404.16992	90.5635529	0	2.05734634	0	0	429.286896	2473.54102	315.795868	639.709473	382.93457
03/04/03	16:02:00	194.519028	20.1659851	13.996582	7.5970459	1443.04626	44.8614235	0	2.05734634	0	0	429.286896	2473.54102	315.795868	639.709473	382.93457
03/04/03	16:03:00	194.519028	20.1659851	13.694458	7.5970459	1410.99158	45.3282166	0	2.05734634	0	0	429.286896	2473.54102	315.795868	639.709473	382.93457
03/04/03	16:04:00	194.519028	20.1659851	13.694458	7.5970459	1410.99158	71.6114807	0	2.05734634	0	0	429.286896	2473.54102	315.795868	639.709473	382.93457
03/04/03	16:05:00	194.519028	20.1659851	13.694458	7.1484375	1410.98352	69.2197723	0	2.05734634	0	0	429.286896	2473.54102	315.795868	639.709473	382.93457
03/04/03	16:06:00	194.519028	20.1659851	13.694458	7.25829983	1410.98352	81.2516251	0	2.05734634	0	0	429.286896	2473.54102	315.795868	639.709473	382.93457
03/04/03	16:07:00	194.519028	20.1659851	13.694458	7.63366604	1410.98352	89.3937454	0	2.05734634	0	0	429.286896	2473.54102	315.795868	639.709473	382.93457
03/04/03	16:08:00	194.519028	20.1659851	13.694458	7.06604004	1379.87646	81.7681656	0	2.05734634	0	0	429.286896	2473.54102	315.795868	639.709473	382.93457
03/04/03	16:09:00	194.519028	20.1659851	13.694458	7.69775438	1442.8667	44.8614235	0	2.05734634	0	0	429.286896	2473.54102	315.795868	639.709473	382.93457
03/04/03	16:10:00	194.519028	20.1659851	13.694458	7.69775438	1380.29932	64.8222656	0	2.05734634	0	0	429.286896	2473.54102	315.795868	639.709473	382.93457
03/04/03	16:11:00	194.519028	20.1659851	14.0057373	7.69775438	1380.29932	70.4257736	0	2.05734634	0	0	429.286896	2473.54102	315.795868	639.709473	382.93457
03/04/03	16:12:00	194.519028	20.1659851	14.0057373	7.69775438	1388.32825	62.1699181	0	2.05734634	0	0	429.286896	2473.54102	315.795868	639.709473	382.93457
03/04/03	16:13:00	194.519028	20.1659851	14.0057373	7.38647461	1388.32825	90.5635529	0	2.05734634	0	0	429.286896	2473.54102	315.795868	639.709473	382.93457

DATE	TIME	FDTT022 SCR/AH Sootblower Stm Temp DEG F	ABPIOO7 Turbine Throttle Pressure PSIG	ABTE008 Main Stm Temp DEG F	AEFI111 Reheater Spray Flow KPPH	ABPI010 Cold Reheat Stm Press PSIG	ABTE016 Cold Reheat Temp DEG F	ABPT024 Hot Reheat Pressure PSIG	ABTE022 Hot Reheat Temp DEG F	AETE119 BFP Hdr Discharge Temp DEG F	AETE130 FW Htr #7 Outlet Temp DEG F	AETE035 FW Htr #7 Casc Drain Temp DEG F	AFPT026 Cold Reheat Ext Hdr Press PSIG	AFTE027 Cold Reheat Ext Hdr Temp DEG F	AFTI017 HP Aux Steam Temp DEG F	AFFI017 Spray Flow to HP Aux Steam KPPH
03/04/03	15:15:00	776.428223	2395.75195	960.885803	0	327.538208	569.151428	308.166473	940.746582	356.920227	428.410034	358.959229	323.120087	574.7453	387.134216	0
03/04/03	15:16:00	776.428223	2396.66748	962.49646	0	327.538208	569.151428	308.166473	940.746582	356.920227	428.410034	358.959229	323.120087	574.7453	387.134216	0
03/04/03	15:17:00	776.428223	2396.66748	962.49646	0	327.538208	569.151428	308.166473	940.746582	356.920227	428.410034	358.959229	323.120087	574.7453	387.134216	0
03/04/03	15:18:00	776.428223	2393.00513	964.129517	0	327.538208	569.151428	308.166473	940.746582	356.920227	428.410034	358.959229	323.120087	574.7453	387.134216	0
03/04/03	15:19:00	776.428223	2400.32959	965.740234	0	327.538208	569.151428	308.166473	940.746582	356.920227	428.410034	358.959229	323.120087	574.7453	387.134216	0
03/04/03	15:20:00	776.428223	2400.32959	965.740234	0	327.538208	569.151428	308.166473	940.746582	356.920227	428.410034	358.959229	323.120087	574.7453	387.134216	0
03/04/03	15:21:00	776.428223	2403.9917	965.740234	0	327.538208	569.151428	308.166473	942.323364	356.920227	428.410034	358.959229	323.120087	574.7453	387.134216	0
03/04/03	15:22:00	776.428223	2396.66748	965.740234	0	327.538208	569.151428	308.166473	942.323364	356.920227	428.410034	358.959229	323.120087	574.7453	387.134216	0
03/04/03	15:23:00	776.428223	2397.58301	968.961914	0	327.538208	569.151428	308.166473	942.323364	356.920227	428.410034	358.959229	323.120087	574.7453	387.134216	0
03/04/03	15:24:00	776.428223	2401.24487	968.961914	0	327.538208	569.151428	308.166473	942.323364	356.920227	428.410034	358.959229	323.120087	574.7453	387.134216	0
03/04/03	15:25:00	776.428223	2404.90723	968.961914	0	327.538208	569.151428	308.166473	942.323364	356.920227	428.410034	358.959229	323.120087	574.7453	387.134216	0
03/04/03	15:26:00	776.428223	2401.24487	967.227783	0	327.538208	569.151428	308.166473	942.323364	356.920227	428.410034	358.959229	323.120087	574.7453	387.134216	0
03/04/03	15:27:00	776.428223	2400.32959	967.227783	0	327.538208	569.151428	308.166473	942.323364	356.920227	428.410034	358.959229	323.120087	574.7453	387.134216	0
03/04/03	15:28:00	776.428223	2396.66748	967.227783	0	327.538208	569.151428	308.166473	943.788147	356.920227	428.410034	358.959229	323.120087	574.7453	387.134216	0
03/04/03	15:29:00	776.428223	2401.24487	968.782654	0	327.538208	569.151428	308.166473	943.788147	356.920227	428.410034	358.959229	323.120087	574.7453	387.134216	0
03/04/03	15:30:00	776.428223	2404.90723	968.782654	0	327.538208	569.151428	308.166473	943.788147	356.920227	428.410034	358.959229	323.120087	574.7453	387.134216	0
03/04/03	15:31:00	776.428223	2405.82251	968.782654	0	327.538208	569.151428	308.166473	943.788147	356.920227	428.410034	358.959229	323.120087	574.7453	387.134216	0
03/04/03	15:32:00	776.428223	2405.82251	967.070862	0	327.538208	569.151428	308.166473	943.788147	356.920227	428.410034	358.959229	323.120087	574.7453	387.134216	0
03/04/03	15:33:00	776.428223	2405.82251	967.048462	0	327.538208	569.151428	308.166473	943.788147	356.920227	428.410034	358.959229	323.120087	574.7453	387.134216	0
03/04/03	15:34:00	776.428223	2398.49854	968.681763	0	327.538208	569.151428	308.166473	943.788147	356.920227	428.410034	358.959229	323.120087	574.7453	387.134216	0
03/04/03	15:35:00	776.428223	2397.58301	970.29248	0	327.538208	569.151428	308.166473	945.252808	356.920227	428.410034	358.959229	323.120087	574.7453	387.134216	0
03/04/03	15:36:00	776.428223	2401.24487	968.636963	0	327.538208	569.151428	308.166473	945.252808	356.920227	428.410034	358.959229	323.120087	574.7453	387.134216	0
03/04/03	15:37:00	776.428223	2398.49854	966.992493	0	327.538208	569.151428	308.166473	945.252808	356.920227	428.410034	358.959229	323.120087	574.7453	387.134216	0
03/04/03	15:38:00	776.428223	2402.16064	965.348083	0	327.538208	569.151428	308.166473	943.575256	356.920227	428.410034	358.959229	323.120087	574.7453	387.134216	0
03/04/03	15:39:00	776.428223	2402.16064	966.947571	0	327.538208	569.151428	308.166473	943.575256	356.920227	428.410034	358.959229	323.120087	574.7453	387.134216	0
03/04/03	15:40:00	776.428223	2402.16064	966.947571	0	327.538208	569.151428	308.166473	943.575256	356.920227	428.410034	358.959229	323.120087	574.7453	387.134216	0
03/04/03	15:41:00	776.428223	2398.49854	966.947571	0	327.538208	569.151428	308.166473	943.575256	356.920227	428.410034	358.959229	323.120087	574.7453	387.134216	0
03/04/03	15:42:00	776.428223	2399.41382	966.947571	0	327.538208	569.151428	308.166473	941.875244	356.920227	428.410034	358.959229	323.120087	574.7453	387.134216	0
03/04/03	15:43:00	776.428223	2403.9917	965.292053	0	327.538208	569.151428	308.166473	941.875244	356.920227	428.410034	358.959229	323.120087	574.7453	387.134216	0
03/04/03	15:44:00	776.428223	2403.9917	966.947693	0	327.538208	569.151428	308.166473	941.875244	356.920227	428.410034	358.959229	323.120087	574.7453	387.134216	0
03/04/03	15:45:00	776.428223	2403.9917	966.947693	0	327.538208	569.151428	308.166473	941.875244	356.920227	428.410034	358.959229	323.120087	574.7453	387.134216	0
03/04/03	15:46:00	776.428223	2403.07593	966.947693	0	327.538208	569.151428	308.166473	940.264954	356.920227	428.410034	358.959229	323.120087	574.7453	387.134216	0
03/04/03	15:47:00	776.428223	2399.41382	966.947693	0	327.538208	569.151428	308.166473	940.264954	356.920227	428.410034	358.959229	323.120087	574.7453	387.134216	0
03/04/03	15:48:00	776.428223	2390.25879	965.314575	0	327.538208	569.151428	308.166473	940.264954	356.920227	428.410034	358.959229	323.120087	574.7453	387.134216	0
03/04/03	15:49:00	776.428223	2397.58301	966.958984	0	327.538208	569.151428	308.166473	940.264954	356.920227	428.410034	358.959229	323.120087	574.7453	387.134216	0
03/04/03	15:50:00	776.428223	2400.32959	966.958984	0	327.538208	569.151428	308.166473	941.920227	356.920227	428.410034	358.959229	323.120087	574.7453	387.134216	0
03/04/03	15:51:00	776.428223	2400.32959	966.958984	0	327.538208	569.151428	308.166473	941.920227	356.920227	428.410034	358.959229	323.120087	574.7453	387.134216	0
03/04/03	15:52:00	776.428223	2399.41382	966.958984	0	327.538208	569.151428	308.166473	941.920227	356.920227	428.410034	358.959229	323.120087	574.7453	387.134216	0
03/04/03	15:53:00	776.428223	2399.41382	968.581055	0	327.538208	569.151428	308.166473	941.920227	356.920227	428.410034	358.959229	323.120087	574.7453	387.134216	0
03/04/03	15:54:00	776.428223	2399.41382	968.581055	0	327.538208	569.151428	308.166473	941.920227	356.920227	428.410034	358.959229	323.120087	574.7453	387.134216	0
03/04/03	15:55:00	776.428223	2403.07593	968.581055	0	327.538208	569.151428	308.166473	943.530518	356.920227	428.410034	358.959229	323.120087	574.7453	387.134216	0
03/04/03	15:56:00	776.428223	2399.41382	968.581055	0	327.538208	569.151428	308.166473	943.530518	356.920227	428.410034	358.959229	323.120087	574.7453	387.134216	0
03/04/03	15:57:00	776.428223	2403.9917	966.936523	0	327.538208	569.151428	308.166473	943.530518	356.920227	428.410034	358.959229	323.120087	574.7453	387.134216	0
03/04/03	15:58:00	776.428223	2403.9917	965.314575	0	327.538208	569.151428	308.166473	943.530518	356.920227	428.410034	358.959229	323.120087	574.7453	387.134216	0
03/04/03	15:59:00	776.428223	2403.9917	965.314575	0	327.538208	569.151428	308.166473	943.530518	356.920227	428.410034	358.959229	323.120087	574.7453	387.134216	0
03/04/03	16:00:00	776.428223	2396.66748	965.314575	0	327.538208	569.151428	308.166473	943.530518	356.920227	428.410034	358.959229	323.120087	574.7453	387.134216	0
03/04/03	16:00:00	776.428223	2396.66748	965.314575	0	327.538208	569.151428	308.166473	943.530518	356.920227	428.410034	358.959229	323.120087	574.7453	387.134216	0
03/04/03	16:01:00	776.428223	2397.58301	965.269775	0	327.538208	569.151428	308.166473	943.530518	356.920227	428.410034	358.959229	323.120087	574.7453	387.134216	0
03/04/03	16:02:00	776.428223	2401.24487	966.902954	0	327.538208	569.151428	308.166473	943.530518	356.920227	428.410034	358.959229	323.120087	574.7453	387.134216	0
03/04/03	16:03:00	776.428223	2397.58301	966.902954	0	327.538208	569.151428	308.166473	943.530518	356.920227	428.410034	358.959229	323.120087	574.7453	387.134216	0
03/04/03	16:04:00	776.428223	2401.24487	968.525085	0	327.538208	569.151428	308.166473	943.530518	356.920227	428.410034	358.959229	323.120087	574.7453	387.134216	0
03/04/03	16:05:00	776.428223	2398.49854	968.525085	0	327.538208	569.151428	308.166473	943.530518	356.920227	428.410034	358.959229	323.120087	574.7453	387.134216	0
03/04/03	16:06:00	776.428223	2394.83618	970.158264	0	327.538208	569.151428	308.166473	941.853027	356.920227	428.410034	358.959229	323.120087	574.7453	387.134216	0
03/04/03	16:07:00	776.428223	2394.83618	968.536255	0	327.538208	569.151428	308.166473	941.853027	356.920227	428.410034	358.959229	323.120087	574.7453	387.134216	0
03/04/03	16:08:00	776.428223	2398.49854	968.536255	0	327.538208	581.321045	308.166473	941.853027	356.920227	428.410034	358.959229	323.120087	574.7453	387.134216	0
03/04/03	16:09:00	776.428223	2398.49854	970.113342	0	327.538208	581.321045	308.166473	941.853027	356.920227	428.410034	358.959229	323.120087	574.7453	387.134216	0
03/04/03	16:10:00	776.428223	2402.16064	970.113342	0	327.538208	581.321045	308.166473	941.853027	356.920227	428.410034	358.959229	323.120087	574.7453	387.134216	0
03/04/03	16:11:00	776.428223	2406.73828	971.701782	0	327.538208	581.321045	308.166473	943.418518	356.920227	428.410034	358.959229	323.120087	574.7453	387.134216	0
03/04/03	16:12:00	776.428223	2403.07593	971.701782	0	327.538208	581.321045	308.166473	941.729736	356.920227	428.410034	358.959229	323.120087	574.7453	387.134216	0
03/04/03	16:13:00	776.428223	2399.41382	971.701782	0	327.538208	581.321045	308.166473	941.729736	356.920227	428.410034	358.959229	323.120087	574.7453	387.134216	0

DATE	TIME	AETE055 BFBP Discharge Hdr Temp DEG F	AFPY044A DA Pegging Stm Valve PCT	ASFI006 Caulkins LP Stm Flow Output KPPH	ASFI016 Caulkins HP Stm Flow Output KPPH	MAJI002 Unit Megavars MVAR	MAJI004 Unit Megawatts MW	ADPT003C Absolute Cond Vac Calculated IN HGA	DALT004A Cooling Twr Basin Level IN	DAFI027 Cooling Twr Blow-Down Flow GPM	EAFI034 Cooling Twr Blow-Down SDA GPM	DATE014A Water Box Inlet A Temp DEG F	DATE014B Water Box Inlet B Temp DEG F	DATE016A Water Box Outlet A Temp DEG F	DATE016B Water Box Outlet B Temp DEG F	ABFI018 Main Steam Flow KPPH
03/04/03	15:15:00	250.296509	0	116.030525	15.5178308	-4.4555569	176.513672	2.48046875	58.5790977	0	148.986481	86.7686768	87.4944305	99.1729202	99.8487854	1439.56409
03/04/03	15:16:00	250.296509	0	116.030525	15.5178308	-4.4555569	176.513672	2.48046875	58.0957031	0	148.986481	88.1905518	87.4944305	99.1729202	99.8487854	1439.56409
03/04/03	15:17:00	250.296509	0	116.030525	15.5178308	-4.4555569	176.513672	2.48046875	58.0957031	0	148.986481	88.1759262	87.4944305	99.1729202	99.8487854	1439.56409
03/04/03	15:18:00	250.296509	0	116.030525	16.0040455	-4.4555569	176.513672	2.48046875	58.0957031	0	145.784317	88.1759262	87.4944305	99.1729202	99.8487854	1439.56409
03/04/03	15:19:00	250.296509	0	116.030525	15.54107	-4.4555569	176.513672	2.48046875	58.0957031	0	148.986481	86.6954956	87.4944305	99.1729202	99.8487854	1439.56409
03/04/03	15:20:00	250.296509	0	120.758904	15.54107	-4.4555569	176.513672	2.48046875	58.0957031	0	158.698288	88.1174469	87.4944305	99.1729202	99.8487854	1439.56409
03/04/03	15:21:00	250.296509	0	120.758904	15.5726662	-4.4555569	176.513672	2.48046875	58.0957031	0	162.03183	88.1027603	87.4944305	99.1729202	99.8487854	1439.56409
03/04/03	15:22:00	250.296509	0	120.758904	16.042244	-4.4555569	176.513672	2.48046875	58.0957031	0	168.5	88.1027603	87.4944305	99.1729202	99.8487854	1439.56409
03/04/03	15:23:00	250.296509	0	115.901512	16.042244	-4.4555569	176.513672	2.48046875	58.0957031	0	175.086899	86.6662064	87.4944305	99.1729202	99.8487854	1439.56409
03/04/03	15:24:00	250.296509	0	115.901512	15.6316195	-4.4555569	176.513672	2.48046875	58.0957031	0	175.086899	88.0735474	87.4944305	99.1729202	99.8487854	1439.56409
03/04/03	15:25:00	250.296509	0	115.901512	15.6194162	-4.4555569	176.513672	2.48046875	58.0957031	0	175.086899	88.0735474	87.4944305	99.1729202	99.8487854	1439.56409
03/04/03	15:26:00	250.296509	0	115.901512	15.6194162	-4.4555569	176.513672	2.48046875	58.0957031	0	171.825195	88.0735474	87.4944305	99.1729202	99.8487854	1439.56409
03/04/03	15:27:00	250.296509	0	115.901512	15.7574158	-4.4555569	176.513672	2.48046875	58.0957031	0	168.5	88.0297012	87.4944305	99.1729202	99.8487854	1439.56409
03/04/03	15:28:00	250.296509	0	115.901512	15.7189827	-4.4555569	176.513672	2.48046875	58.0957031	0	171.733719	88.0004196	87.3042145	99.1729202	99.8487854	1439.56409
03/04/03	15:29:00	250.296509	0	115.901512	15.7189827	-4.4555569	176.513672	2.48046875	58.0957031	0	174.997116	87.971199	87.3042145	99.2973404	99.8487854	1439.56409
03/04/03	15:30:00	250.296509	0	115.901512	15.3893309	-4.4555569	176.513672	2.48046875	58.0957031	0	174.997116	87.971199	87.3042145	99.2973404	99.8487854	1439.56409
03/04/03	15:31:00	250.296509	0	115.901512	15.8645201	-4.4555569	176.513672	2.48046875	58.0957031	0	168.406693	87.971199	87.3042145	99.2973404	99.8487854	1439.56409
03/04/03	15:32:00	250.296509	0	117.974266	15.8645201	-4.4555569	176.513672	2.48046875	58.0957031	0	155.090073	87.971199	87.3042145	99.2973404	99.8487854	1439.56409
03/04/03	15:33:00	250.296509	0	120.018425	15.404665	-4.4555569	176.513672	2.48046875	58.0957031	0	151.706665	87.971199	87.3042145	99.2973404	99.8487854	1439.56409
03/04/03	15:34:00	250.296509	0	120.018425	15.8078756	-4.4555569	176.513672	2.48046875	57.6123009	0	151.706665	87.971199	87.3042145	99.2973404	99.8487854	1439.56409
03/04/03	15:35:00	250.296509	0	120.018425	15.3512344	-4.4555569	176.513672	2.48046875	57.6123009	0	158.301453	87.9273376	87.3042145	99.2973404	99.8487854	1439.56409
03/04/03	15:36:00	250.296509	0	115.655083	15.7685242	-4.4555569	176.513672	2.48046875	57.6123009	0	161.643219	87.9273376	87.3042145	99.2973404	99.8487854	1439.56409
03/04/03	15:37:00	250.296509	0	115.655083	15.7685242	-4.4555569	176.513672	2.48046875	57.6123009	0	161.643219	87.9273376	87.3042145	99.2973404	99.8487854	1439.56409
03/04/03	15:38:00	250.296509	0	115.655083	15.2840309	-4.4555569	176.513672	2.48046875	57.6123009	0	151.913879	87.9273376	87.3042145	99.2973404	99.8487854	1439.56409
03/04/03	15:39:00	250.296509	0	115.655083	15.2840309	-4.4555569	176.513672	2.48046875	57.6123009	0	138.590881	87.9273376	87.3042145	99.2973404	99.8487854	1439.56409
03/04/03	15:40:00	250.296509	0	115.655083	15.7193613	-4.4555569	176.513672	2.48046875	57.6123009	0	125.473892	87.9273376	87.3042145	99.2973404	99.8487854	1439.56409
03/04/03	15:41:00	250.296509	0	113.45137	15.7174969	-4.4555569	176.513672	2.48046875	57.6123009	0	112.214874	87.9273376	87.3042145	99.2973404	99.8487854	1439.56409
03/04/03	15:42:00	250.296509	0	113.45137	15.7623634	-4.4555569	176.513672	2.48046875	57.6123009	0	108.935165	87.9273376	87.3042145	99.2973404	99.8487854	1439.56409
03/04/03	15:43:00	250.296509	0	111.299896	15.662466	-4.4555569	176.513672	2.48046875	57.6123009	0	115.809624	87.9273376	87.3042145	99.2973404	99.8487854	1439.56409
03/04/03	15:44:00	250.296509	0	111.299896	15.662466	-4.4555569	176.513672	2.48046875	57.6123009	0	122.55246	87.9273376	87.0994186	99.2973404	99.8487854	1439.56409
03/04/03	15:45:00	250.296509	0	111.299896	15.2598028	-4.4555569	176.513672	2.48046875	57.6123009	0	125.974991	87.9273376	87.0555191	99.2973404	99.8487854	1439.56409
03/04/03	15:46:00	250.296509	0	111.299896	15.7046795	-4.4555569	176.513672	2.48046875	57.6123009	0	129.306274	87.9273376	87.0555191	99.2973404	99.8487854	1439.56409
03/04/03	15:47:00	250.296509	0	111.299896	15.5875616	-4.4555569	176.513672	2.48046875	57.6123009	0	129.306274	87.9273376	87.0555191	99.2973404	99.8487854	1439.56409
03/04/03	15:48:00	250.296509	0	111.299896	15.5875616	-4.4555569	176.513672	2.48046875	57.6123009	0	135.95369	87.9273376	87.0555191	99.2973404	99.8487854	1439.56409
03/04/03	15:49:00	250.296509	0	111.299896	15.5875616	-4.4555569	176.513672	2.48046875	57.114254	0	149.723724	87.9273376	87.0555191	99.2973404	99.8487854	1439.56409
03/04/03	15:50:00	250.296509	0	115.858849	15.5148115	-4.4555569	176.513672	2.48046875	57.114254	0	166.246033	88.3894424	86.9823608	99.2973404	99.8487854	1439.56409
03/04/03	15:51:00	250.296509	0	115.858849	15.5868826	-4.4555569	176.513672	2.48046875	57.114254	0	182.985565	86.9531097	86.9531097	99.2973404	99.8487854	1439.56409
03/04/03	15:52:00	250.296509	0	115.858849	15.5926123	-4.4555569	176.513672	2.48046875	57.114254	0	199.573029	86.9531097	86.9531097	99.2973404	99.8487854	1439.56409
03/04/03	15:53:00	250.296509	0	111.227974	15.5926123	-4.4555569	176.513672	2.48046875	57.114254	0	213.043625	86.9238586	86.9385147	99.2973404	99.8487854	1439.56409
03/04/03	15:54:00	250.296509	0	111.227974	15.5926123	-4.4555569	176.513672	2.48046875	57.114254	0	223.050095	86.9385147	86.9385147	99.2973404	99.8487854	1439.56409
03/04/03	15:55:00	250.296509	0	109.143639	15.5926123	-4.4555569	176.513672	2.48046875	57.114254	0	232.961746	88.3602219	86.9385147	99.2973404	99.8487854	1439.56409
03/04/03	15:56:00	250.296509	0	109.143639	15.4086609	-4.4555569	176.513672	2.48046875	57.114254	0	242.919403	86.9385834	86.9385147	99.2973404	99.8487854	1439.56409
03/04/03	15:57:00	250.296509	0	109.143639	15.5558262	-4.4555569	176.513672	2.48046875	57.114254	0	252.731491	88.3164139	86.9092636	99.2973404	99.8487854	1439.56409
03/04/03	15:58:00	250.296509	0	109.143639	15.4948778	-4.4555569	176.513672	2.48046875	57.114254	0	262.713104	86.8800049	86.9092636	99.2973404	99.8487854	1439.56409
03/04/03	15:59:00	250.296509	0	111.291931	15.4948778	-4.4555569	176.513672	2.48046875	57.114254	0	272.61554	86.8800049	86.9092636	99.2973404	99.8487854	1439.56409
03/04/03	16:00:00	250.296509	0	116.26194	15.4948778	-4.4555569	176.513672	2.48046875	57.114254	0	279.040009	88.2725372	86.9092636	99.2973404	99.8487854	1439.56409
03/04/03	16:00:00	250.296509	0	116.26194	15.4948778	-4.4555569	176.513672	2.48046875	57.114254	0	279.040009	88.2725372	86.9092636	99.2973404	99.8487854	1439.56409
03/04/03	16:01:00	250.296509	0	116.26194	15.612711	-4.4555569	176.513672	2.48046875	57.114254	0	285.539093	88.287178	86.9092636	99.2973404	99.8487854	1439.56409
03/04/03	16:02:00	250.296509	0	111.606392	15.612711	-4.4555569	176.513672	2.48046875	57.114254	0	285.539093	88.2725372	86.9092636	99.2973404	99.8487854	1439.56409
03/04/03	16:03:00	250.296509	0	111.606392	15.2113523	-4.4555569	176.513672	2.48046875	57.114254	0	282.280548	88.2725983	86.9092636	99.2973404	99.8487854	1439.56409
03/04/03	16:04:00	250.296509	0	109.533333	15.2759399	-4.4555569	176.513672	2.48046875	57.114254	0	272.500458	86.8361435	86.9092636	99.2973404	99.8487854	1439.56409
03/04/03	16:05:00	250.296509	0	109.533333	14.8289967	-4.4555569	176.513672	2.48046875	57.114254	0	265.97641	86.8215485	86.9092636	99.2973404	99.8487854	1439.56409
03/04/03	16:06:00	250.296509	0	109.533333	15.3724461	-4.4555569	176.513672	2.48046875	56.6162071	0	256.061279	86.8068771	86.9092636	99.2973404	99.8487854	1439.56409
03/04/03	16:07:00	250.296509	0	109.533333	14.946044	-4.4555569	176.513672	2.48046875	56.6162071	0	252.793564	86.8068771	86.9092636	99.2973404	99.8487854	1439.56409
03/04/03	16:08:00	250.296509	0	113.672943	15.8226147	-4.4555569	176.513672	2.48046875	56.6162071	0	252.793564	86.7922745	86.9092636	99.2973404	99.8487854	1439.56409
03/04/03	16:09:00	250.296509	0	113.672943	15.7353678	-4.4555569	176.513672	2.48046875	56.6162071	0	256.061279	88.1994858	86.7922745	99.2973404	99.8487854	1439.56409
03/04/03	16:10:00	250.296509	0	115.705978	14.8158112	-4.4555569	176.513672	2.48046875	56.6162071	0	262.593658	88.1994858	86.7922745	99.2973404	99.8487854	1439.56409
03/04/03	16:11:00	250.296509	0	111.246185	15.2715063	-4.4555569	176.513672	2.48046875	56.6162071	0	272.327759	88.1848984	86.7922745	99.2973404	99.8487854	1441.79626
03/04/03	16:12:00	250.296509	0	111.246185	14.7750902	-4.4555569	176.513672	2.48046875	56.6162071	0	275.533691	88.1848984	86.7922745	99.2973404	99.8487854	1441.79626
03/04/03	16:13:00	250.296509	0	111.246185	14.7750902	-4.4555569	176.513672	2.48046875	56.6162071	0	278.758881	86.7776718	86.7922745	99.2973404	99.8487854	1441.79626

DATE	TIME	MBEL100 Excitation Losses KW	BATI013 AH Gas Outlet Temp DEG F	BAAI046 Excess Oxygen PCT	RMAT500 Relative Humidity PCT	BATI011 AH Air Inlet Temp DEG F	JCFT152 Coal Fdr A Flow Rate KPPH	JCFT252 Coal Fdr B Flow Rate KPPH	JCFT352 Coal Fdr C Flow Rate KPPH	JCFT452 Coal Fdr D Flow Rate KPPH	NAET102 13.8 Kv NAA01 Aux Scr Volts VOLTS	NAET202 13.8 Kv NAAO2 Aux Scr Volts VOLTS	NAIT101 13.8 Kv NAAO1 Aux Scr Current AMPS	NAIT201 13.8 Kv NAA02 Aux Scr Current AMPS	MAII006A Generator Arm Current Phase A KA	MAII006B Generator Arm Current Phase B KA
03/04/03	15:15:00	585.394714	262.987396	3.90402007	3.19824147	106.889542	80.5932617	0.06042493	79.821167	-0.0067153	13687.8662	13885.6191	708.17865	382.250946	4.65234327	4.69628859
03/04/03	15:16:00	585.394714	262.987396	3.65165377	5.39550781	106.889542	75.5578537	0.06042493	74.8529053	-0.0067153	13687.8662	13885.6191	708.17865	382.250946	4.65234327	4.69628859
03/04/03	15:17:00	585.394714	262.987396	3.64998579	6.43310595	106.889542	74.7186203	0.06042493	74.9536057	-0.0067153	13687.8662	13885.6191	708.17865	382.250946	4.65234327	4.69628859
03/04/03	15:18:00	585.394714	262.987396	3.64998579	3.90014434	106.889542	80.2911377	0.06042493	79.8883057	-0.0067153	13687.8662	13885.6191	708.17865	382.250946	4.65234327	4.69628859
03/04/03	15:19:00	585.394714	262.987396	3.39296865	5.94482231	106.889542	74.5507813	0.06042493	77.8405762	-0.0067153	13687.8662	13885.6191	708.17865	366.870087	4.65234327	4.69628859
03/04/03	15:20:00	585.394714	262.987396	3.64696693	6.95190239	106.889542	76.3635178	0.06042493	76.2628174	-0.0067153	13687.8662	13885.6191	708.17865	363.940399	4.65234327	4.69628859
03/04/03	15:21:00	585.394714	262.987396	3.64696693	3.13720775	106.889542	71.6973877	0.06042493	72.4359055	-0.0067153	13687.8662	13885.6191	708.17865	380.786133	4.65234327	4.69628859
03/04/03	15:22:00	585.394714	262.987396	3.64696693	2.03857327	106.889542	80.4925461	0.06042493	80.6268311	-0.0067153	13687.8662	13885.6191	708.17865	361.010712	4.65234327	4.69628859
03/04/03	15:23:00	585.394714	262.987396	3.63426518	3.0761714	106.889542	81.6674805	0.06042493	80.3582764	-0.0067153	13687.8662	13885.6191	708.17865	375.292999	4.65234327	4.69628859
03/04/03	15:24:00	585.394714	262.987396	3.38262033	0.87890488	106.889542	72.8051758	0.06042493	75.7592773	-0.0067153	13687.8662	13885.6191	708.17865	387.37796	4.65234327	4.69628859
03/04/03	15:25:00	585.394714	262.987396	3.68209267	-0.128175	106.889542	68.5418625	0.06042493	68.4747314	-0.0067153	13687.8662	13885.6191	708.17865	387.37796	4.65234327	4.69628859
03/04/03	15:26:00	585.394714	262.987396	4.18897772	-0.128175	106.889542	74.5843506	0.06042493	75.322876	-0.0067153	13687.8662	13885.6191	708.17865	387.37796	4.65234327	4.69628859
03/04/03	15:27:00	585.394714	262.987396	3.65455174	-0.128175	106.889542	78.4448242	0.06042493	78.4448242	-0.0067153	13687.8662	13885.6191	708.17865	387.37796	4.65234327	4.69628859
03/04/03	15:28:00	585.394714	262.987396	3.90455413	-0.128175	106.889542	81.1975098	0.06042493	80.5932617	-0.0067153	13687.8662	13885.6191	708.17865	373.828125	4.65234327	4.69628859
03/04/03	15:29:00	585.394714	262.987396	3.66301465	-0.128175	106.889542	76.3970871	0.06042493	76.1621094	-0.0067153	13687.8662	13885.6191	708.17865	385.913055	4.65234327	4.69628859
03/04/03	15:30:00	585.394714	262.987396	3.67538261	-0.128175	106.889542	70.925293	0.06042493	70.6567383	-0.0067153	13687.8662	13885.6191	708.17865	367.96875	4.65234327	4.69628859
03/04/03	15:31:00	585.394714	262.987396	3.9372797	-0.128175	106.889542	71.3616867	0.06042493	71.7980957	-0.0067153	13687.8662	13885.6191	708.17865	370.165985	4.65234327	4.69628859
03/04/03	15:32:00	585.394714	262.987396	3.9372797	-0.128175	106.889542	71.6302414	0.06042493	70.4217529	-0.0067153	13687.8662	13885.6191	708.17865	370.165985	4.65234327	4.69628859
03/04/03	15:33:00	585.394714	262.987396	3.9408927	-0.128175	106.889542	72.2344971	0.06042493	71.0595627	-0.0067153	13687.8662	13885.6191	708.17865	383.349609	4.65234327	4.69628859
03/04/03	15:34:00	585.394714	262.987396	3.67948747	-0.128175	106.889542	77.6391602	0.06042493	77.4041748	-0.0067153	13687.8662	13885.6191	708.17865	383.349609	4.65234327	4.69628859
03/04/03	15:35:00	585.394714	262.987396	3.67948747	-0.128175	106.889542	79.6533203	0.06042493	78.7805176	-0.0067153	13687.8662	13885.6191	708.17865	383.349609	4.65234327	4.69628859
03/04/03	15:36:00	585.394714	262.987396	3.69329667	-0.128175	106.889542	72.8723145	0.06042493	73.4765625	-0.0067153	13687.8662	13885.6191	708.17865	383.349609	4.65234327	4.69628859
03/04/03	15:37:00	585.394714	262.987396	3.96295571	-0.128175	106.889542	75.9606934	0.06042493	76.0949631	-0.0067153	13687.8662	13885.6191	708.17865	383.349609	4.65234327	4.69628859
03/04/03	15:38:00	585.394714	262.987396	3.68944335	0.90942311	106.889542	71.3616867	0.06042493	70.5895996	-0.0067153	13687.8662	13885.6191	708.17865	383.349609	4.65234327	4.69628859
03/04/03	15:39:00	585.394714	262.987396	3.96091843	1.18408179	106.889542	72.5366211	0.06042493	71.5966721	-0.0067153	13687.8662	13885.6191	708.17865	387.74411	4.65234327	4.69628859
03/04/03	15:40:00	585.394714	262.987396	3.96814847	1.18408179	106.889542	74.5507813	0.06042493	74.3493652	-0.0067153	13687.8662	13885.6191	708.17865	377.856445	4.65234327	4.69628859
03/04/03	15:41:00	585.394714	262.987396	3.70264363	0.08545003	106.889542	77.5720215	0.06042493	77.6727295	-0.0067153	13687.8662	13885.6191	708.17865	363.207947	4.65234327	4.69628859
03/04/03	15:42:00	585.394714	262.987396	3.96401215	0.08545003	106.889542	77.6727295	0.06042493	77.2363205	-0.0067153	13687.8662	13885.6191	708.17865	375.292999	4.65234327	4.69628859
03/04/03	15:43:00	585.394714	262.987396	3.71319914	0.08545003	106.889542	70.791008	0.06042493	71.5631104	-0.0067153	13687.8662	13885.6191	708.17865	392.871094	4.65234327	4.69628859
03/04/03	15:44:00	585.394714	262.987396	3.96457887	0.08545003	106.889542	72.2344971	0.06042493	70.4217529	-0.0067153	13687.8662	13885.6191	708.17865	392.871094	4.65234327	4.69628859
03/04/03	15:45:00	585.394714	262.987396	3.71385622	0.08545003	106.889542	70.3546143	0.06042493	70.0524902	-0.0067153	13687.8662	13885.6191	708.17865	392.871094	4.65234327	4.69628859
03/04/03	15:46:00	585.394714	262.987396	3.97671938	0.08545003	106.889542	72.4023438	0.06042493	71.6973877	-0.0067153	13687.8662	13885.6191	708.17865	380.786133	4.65234327	4.69628859
03/04/03	15:47:00	585.394714	262.987396	3.97671938	0.08545003	106.889542	78.1427002	0.06042493	78.7805176	-0.0067153	13687.8662	13885.6191	708.17865	385.913055	4.65234327	4.69628859
03/04/03	15:48:00	585.394714	262.987396	4.23124838	0.08545003	106.889542	82.7416992	0.06042493	82.2381516	-0.0067153	13687.8662	13885.6191	708.17865	367.236298	4.65234327	4.69628859
03/04/03	15:49:00	585.394714	262.987396	3.71162963	0.08545003	106.889542	77.2363205	0.06042493	76.4978027	-0.0067153	13687.8662	13885.6191	708.17865	380.786133	4.65234327	4.69628859
03/04/03	15:50:00	585.394714	262.987396	3.71162963	0.08545003	106.889542	72.4694748	0.06042493	72.9394531	-0.0067153	13687.8662	13885.6191	708.17865	365.405273	4.65234327	4.69628859
03/04/03	15:51:00	585.394714	262.987396	3.71162963	0.08545003	106.889542	71.2609863	0.06042493	71.6638184	-0.0067153	13687.8662	13885.6191	708.17865	378.955048	4.65234327	4.69628859
03/04/03	15:52:00	585.394714	262.987396	4.21547556	0.08545003	106.889542	73.6779785	0.06042493	74.3829269	-0.0067153	13687.8662	13885.6191	708.17865	378.955048	4.65234327	4.69628859
03/04/03	15:53:00	585.394714	262.987396	3.67510056	1.12304521	106.889542	75.322876	0.06042493	75.8264084	-0.0067153	13687.8662	13885.6191	708.17865	378.955048	4.65234327	4.69628859
03/04/03	15:54:00	585.394714	262.987396	3.67510056	2.16064334	106.889542	76.0949631	0.06042493	78.2769775	-0.0067153	13687.8662	13885.6191	708.17865	378.955048	4.65234327	4.69628859
03/04/03	15:55:00	585.394714	262.987396	3.93038607	2.16064334	106.889542	71.7645264	0.06042493	72.4694748	-0.0067153	13687.8662	13885.6191	708.17865	378.955048	4.65234327	4.69628859
03/04/03	15:56:00	585.394714	262.987396	3.93226409	2.16064334	106.889542	75.423584	0.06042493	74.9200439	-0.0067153	13687.8662	13885.6191	708.17865	378.955048	4.65234327	4.69628859
03/04/03	15:57:00	585.394714	262.987396	3.93034649	-0.128175	106.889542	72.3687744	0.06042493	71.3952637	-0.0067153	13687.8662	13885.6191	708.17865	378.955048	4.65234327	4.69628859
03/04/03	15:58:00	585.394714	262.987396	3.93034649	-0.128175	106.889542	71.9995117	0.06042493	72.2680664	-0.0067153	13687.8662	13885.6191	708.17865	378.955048	4.65234327	4.69628859
03/04/03	15:59:00	585.394714	262.987396	4.18885994	0.93994141	106.889542	73.8122482	0.06042493	74.1815186	-0.0067153	13687.8662	13885.6191	708.17865	366.137726	4.65234327	4.69628859
03/04/03	16:00:00	585.394714	262.987396	3.92898655	3.19824147	106.889542	79.0826416	0.06042493	81.1975098	-0.0067153	13687.8662	13885.6191	708.17865	379.687469	4.65234327	4.69628859
03/04/03	16:00:00	585.394714	262.987396	3.92898655	3.19824147	106.889542	79.0826416	0.06042493	81.1975098	-0.0067153	13687.8662	13885.6191	708.17865	379.687469	4.65234327	4.69628859
03/04/03	16:01:00	585.394714	262.987396	3.66909122	3.19824147	106.889542	81.2646408	0.06042493	80.324707	-0.0067153	13687.8662	13885.6191	708.17865	391.77243	4.65234327	4.69628859
03/04/03	16:02:00	585.394714	262.987396	3.93085957	4.32739162	106.889542	76.027832	0.06042493	76.5649414	-0.0067153	13687.8662	13885.6191	708.17865	391.77243	4.65234327	4.69628859
03/04/03	16:03:00	585.394714	262.987396	3.93085957	7.47070122	106.889542	75.6585693	0.06042493	75.5242844	-0.0067153	13687.8662	13885.6191	708.17865	391.77243	4.65234327	4.69628859
03/04/03	16:04:00	585.394714	262.987396	3.66908479	6.03637695	106.889542	69.8510742	0.06042493	70.0860596	-0.0067153	13687.8662	13885.6191	708.17865	378.955048	4.65234327	4.69628859
03/04/03	16:05:00	585.394714	262.987396	3.92542553	3.74755883	106.889542	73.2080078	0.06042493	71.0931396	-0.0067153	13687.8662	13885.6191	708.17865	378.955048	4.65234327	4.69628859
03/04/03	16:06:00	585.394714	262.987396	3.90192318	2.74047899	106.889542	78.5455322	0.06042493	77.6055908	-0.0067153	13687.8662	13885.6191	708.17865	378.955048	4.65234327	4.69628859
03/04/03	16:07:00	585.394714	262.987396	3.90298843	3.83911085	106.889542	78.7805176	0.06042493	79.0826416	-0.0067153	13687.8662	13885.6191	708.17865	378.955048	4.65234327	4.69628859
03/04/03	16:08:00	585.394714	262.987396	3.65292811	1.55029237	106.889542	75.0878906	0.06042493	75.7592773	-0.0067153	13687.8662	13885.6191	708.17865	365.771484	4.65234327	4.69628859
03/04/03	16:09:00	585.394714	262.987396	3.65097761	1.55029237	106.889542	73.2415771	0.06042493	73.4094238	-0.0067153	13687.8662	13885.6191	708.17865	382.983398	4.65234327	4.69628859
03/04/03	16:10:00	585.394714	262.987396	3.66034722	0.45166063	106.889542	70.925293	0.06042493	71.126709	-0.0067153	13687.8662	13885.6191	708.17865	382.983398	4.65234327	4.69628859
03/04/03	16:11:00	585.394714	262.987396	3.62556005	1.48925579	106.889542	65.1513596	0.06042493	69.1796875	-0.0067153	13687.8662	13885.6191	708.17865	382.983398	4.65234327	4.69628859
03/04/03	16:12:00	585.394714	262.987396	4.15795422	2.49633861	106.889542	73.0065842	0.06042493	71.5631104	-0.0067153	13687.8662	13885.6191	708.17865	382.983398	4.65234327	4.69628859
03/04/03	16:13:00	585.394714	262.987396	3.90175629	3.68652225	106.889542	77.5384521	0.06042493	76.2963867	-0.0067153	13687.8662	13885.6191	708.17865	382.983398	4.65234327	4.69628859

DATE	TIME	MAII006C Generator Arm Current Phase C KA	RMTT500 Ambient Temp DEG F	ADFI001 Cond Xfer Flow Calculated KPPH	ADLT001 Condenser Hotwell Level IN	TSTMFLO Total Stm Flow KPPH	BAFI002 Total Air Flow KPPH	REAI001 CEMS CO2 %	BAAI052 Boiler CO PPM	BATE055 SCR Outlet Temp. DEG F	BATI020 AH Air Outlet Temp. DEG F		AEFY136 Fisher FW Valve Demand %
03/04/03	15:15:00	4.9453125	87.2680664	160.83316	47.0068359	1446.10693	2008.15784	11.2841797	0	632.355469	545.385925	0	43.3055
03/04/03	15:16:00	4.9453125	87.2680664	159.891174	47.0068359	1446.10693	2004.17944	11.583252	0	632.355469	545.385925	0	43.5229187
03/04/03	15:17:00	4.9453125	87.2680664	159.719299	47.0068359	1446.10693	2006.03821	11.583252	0	632.355469	545.385925	0	42.2757988
03/04/03	15:18:00	4.9453125	87.2680664	171.494614	47.0068359	1446.10693	2006.03821	11.583252	0	632.355469	545.385925	0	42.2880402
03/04/03	15:19:00	4.9453125	87.2680664	167.442856	47.0068359	1446.10693	2006.03821	11.583252	0	632.355469	545.385925	0	42.2335052
03/04/03	15:20:00	4.9453125	87.2680664	161.514816	47.0068359	1446.10693	2006.03821	11.7907715	0	632.355469	545.385925	0	42.3307419
03/04/03	15:21:00	4.9453125	87.2680664	158.337616	47.0068359	1446.10693	2041.71375	11.6931143	0	632.355469	545.385925	0	43.3564148
03/04/03	15:22:00	4.9453125	87.2680664	164.296722	47.0068359	1446.10693	2003.7406	11.6870117	0	632.355469	545.385925	0	41.0825043
03/04/03	15:23:00	4.9453125	87.2680664	163.122299	47.0068359	1446.10693	2005.07153	11.4855957	0	632.355469	545.385925	0	41.1547279
03/04/03	15:24:00	4.9453125	87.2680664	164.880768	47.0068359	1446.10693	2040.10388	11.6931143	0	632.355469	545.385925	0	42.2647247
03/04/03	15:25:00	4.9453125	87.2680664	165.047272	47.0068359	1446.10693	2046.1532	11.6931143	0	632.355469	545.385925	0	41.1130714
03/04/03	15:26:00	4.9453125	87.2680664	171.654678	47.0068359	1446.10693	2011.17419	11.6931143	0	632.355469	545.385925	0	42.0266113
03/04/03	15:27:00	4.9453125	87.2680664	171.09375	47.0068359	1446.10693	2013.66089	11.2841797	0	632.355469	545.385925	0	42.0266113
03/04/03	15:28:00	4.9453125	87.2680664	160.747772	47.0068359	1446.10693	2007.68799	11.4916983	0	632.355469	545.385925	0	41.8416252
03/04/03	15:29:00	4.9453125	87.2680664	156.593353	47.0068359	1446.10693	2014.34961	11.2841797	0	632.355469	545.385925	0	43.0315819
03/04/03	15:30:00	4.9453125	87.2680664	153.582687	47.0068359	1446.10693	2058.63159	11.5893555	0	632.355469	545.385925	0	43.0756798
03/04/03	15:31:00	4.9453125	87.2680664	163.962021	47.0068359	1446.10693	2065.94458	11.5893555	0	632.355469	545.385925	0	42.0880737
03/04/03	15:32:00	4.9453125	87.2680664	158.077194	47.0068359	1446.10693	2026.1665	11.3879385	0	632.355469	545.385925	0	43.2456665
03/04/03	15:33:00	4.9453125	87.2680664	163.122299	47.0068359	1446.10693	2026.5343	11.394042	0	632.355469	545.385925	0	42.1397209
03/04/03	15:34:00	4.9453125	87.2680664	168.097687	47.0068359	1446.10693	2026.5343	11.394042	0	632.355469	545.385925	0	41.1445999
03/04/03	15:35:00	4.9453125	87.2680664	161.089127	47.0068359	1446.10693	2026.5343	11.394042	0	632.355469	545.385925	0	42.1979065
03/04/03	15:36:00	4.9453125	87.2680664	156.681046	47.0068359	1446.10693	2026.5343	11.595458	0	632.355469	545.385925	0	42.3755188
03/04/03	15:37:00	4.9453125	87.2680664	159.288818	47.0068359	1446.10693	2064.55371	11.394042	0	632.355469	545.385925	0	42.4656143
03/04/03	15:38:00	4.9453125	87.2680664	174.668335	47.0068359	1446.10693	2069.09766	11.2902822	0	632.355469	545.385925	0	43.6983681
03/04/03	15:39:00	4.9453125	87.2680664	176.933731	47.0068359	1446.10693	2033.56189	11.4916983	0	632.355469	545.385925	0	42.618515
03/04/03	15:40:00	4.9453125	87.2680664	160.40567	47.0068359	1446.10693	2034.03699	11.2841797	0	632.355469	545.385925	0	41.5914497
03/04/03	15:41:00	4.9453125	87.2680664	162.193604	47.0068359	1446.10693	2031.70642	11.4916983	0	632.355469	545.385925	0	41.7518463
03/04/03	15:42:00	4.9453125	87.2680664	173.16806	47.0068359	1446.10693	2031.13989	11.4855957	0	632.355469	545.385925	0	41.7491722
03/04/03	15:43:00	4.9453125	87.2680664	175.999863	47.0068359	1446.10693	2031.13989	11.2841797	0	632.355469	545.385925	0	42.7633247
03/04/03	15:44:00	4.9453125	87.2680664	156.768661	47.0068359	1446.10693	2028.09192	11.4916983	0	632.355469	545.385925	0	42.7633247
03/04/03	15:45:00	4.9453125	87.2680664	155.006775	47.0068359	1446.10693	2028.09192	11.2902822	0	632.355469	545.385925	0	42.7633247
03/04/03	15:46:00	4.9453125	87.2680664	154.029129	47.0068359	1446.10693	2028.74268	11.4855957	0	632.355469	545.385925	0	41.761364
03/04/03	15:47:00	4.9453125	87.2680664	160.320038	47.0068359	1446.10693	2028.74268	11.4978018	0	632.355469	545.385925	0	41.6592102
03/04/03	15:48:00	4.9453125	87.2680664	158.857147	47.0068359	1446.10693	2031.32544	11.2902822	0	632.355469	545.385925	0	42.7191162
03/04/03	15:49:00	4.9453125	87.2680664	156.768661	47.0068359	1446.10693	2031.32544	11.2902822	0	632.355469	545.385925	0	43.756218
03/04/03	15:50:00	4.9453125	87.2680664	161.514816	47.0068359	1446.10693	2073.43188	11.3879385	0	632.355469	545.385925	0	43.5483894
03/04/03	15:51:00	4.9453125	87.2680664	160.662323	47.0068359	1446.10693	2038.67395	11.3879385	0	632.355469	545.385925	0	41.4651909
03/04/03	15:52:00	4.9453125	87.2680664	155.890198	47.0068359	1446.10693	2038.67395	11.394042	0	632.355469	545.385925	0	41.6009598
03/04/03	15:53:00	4.9453125	87.2680664	158.424332	47.0068359	1446.10693	2038.67395	11.3879385	0	632.355469	545.385925	0	42.6655045
03/04/03	15:54:00	4.9453125	87.2680664	157.990295	47.0068359	1446.10693	2038.67395	11.3879385	0	632.355469	545.385925	0	42.6655045
03/04/03	15:55:00	4.9453125	87.2680664	157.03125	47.0068359	1446.10693	2038.67395	11.5893555	0	632.355469	545.385925	0	42.6655045
03/04/03	15:56:00	4.9453125	87.2680664	154.118271	47.4902344	1446.10693	2038.67395	11.3879385	0	632.355469	545.385925	0	42.6655045
03/04/03	15:57:00	4.9453125	87.2680664	150.876343	47.4902344	1446.10693	2038.67395	11.394042	0	632.355469	545.385925	0	41.7640877
03/04/03	15:58:00	4.9453125	87.2680664	154.385345	47.4902344	1446.10693	2038.67395	11.394042	0	632.355469	545.385925	0	41.7640877
03/04/03	15:59:00	4.9453125	87.2680664	152.595947	47.4902344	1446.10693	2039.59985	11.4916983	0	632.355469	545.385925	0	41.8005943
03/04/03	16:00:00	4.9453125	87.2680664	153.672073	47.4902344	1446.10693	2002.08777	11.2841797	0	632.355469	545.385925	0	41.7869911
03/04/03	16:00:00	4.9453125	87.2680664	153.672073	47.4902344	1446.10693	2002.08777	11.2841797	0	632.355469	545.385925	0	41.7869911
03/04/03	16:01:00	4.9453125	87.2680664	152.415848	47.4902344	1446.10693	2037.25403	11.2841797	0	632.355469	545.385925	0	41.6967583
03/04/03	16:02:00	4.9453125	87.2680664	154.207367	47.4902344	1446.10693	2037.25403	11.4916983	0	632.355469	545.385925	0	42.7499886
03/04/03	16:03:00	4.9453125	87.2680664	156.50563	47.4902344	1446.10693	2037.25403	11.4916983	0	632.355469	545.385925	0	42.7956848
03/04/03	16:04:00	4.9453125	87.2680664	152.145294	47.4902344	1446.10693	2073.92773	11.2841797	0	632.355469	545.385925	0	42.8698425
03/04/03	16:05:00	4.9453125	87.2680664	150.329239	47.4902344	1446.10693	2036.19238	11.583252	0	632.355469	545.385925	0	41.7837486
03/04/03	16:06:00	4.9453125	87.2680664	145.3125	47.4902344	1446.10693	1998.10022	11.4916983	0	632.355469	545.385925	0	41.8282433
03/04/03	16:07:00	4.9453125	87.2680664	138.440048	47.4902344	1446.10693	2001.03101	11.3879385	0	632.355469	545.385925	0	40.7887115
03/04/03	16:08:00	4.9453125	87.2680664	133.901779	47.9736328	1446.10693	2036.53186	11.5893555	0	632.355469	545.385925	0	41.7936554
03/04/03	16:09:00	4.9453125	87.2680664	114.795906	47.9736328	1446.10693	2036.53186	11.595458	0	632.355469	545.385925	0	42.8286133
03/04/03	16:10:00	4.9453125	87.2680664	113.714149	47.9736328	1446.10693	2036.53186	11.394042	0	632.355469	545.385925	0	41.8919983
03/04/03	16:11:00	4.9453125	87.2680664	116.340691	47.9736328	1443.84985	2036.53186	11.3879385	0	632.355469	545.385925	0	41.9657211
03/04/03	16:12:00	4.9453125	87.2680664	115.630272	47.9736328	1443.84985	2036.09009	11.3879385	0	632.355469	545.385925	0	41.0214157
03/04/03	16:13:00	4.9453125	87.2680664	115.511444	47.9736328	1443.84985	1999.48462	11.595458	0	632.355469	545.385925	0	42.0700569

		MAJI007	MAJI008	NAJT101	NAJT201	AEFI135	AEFI131	FDFI002	FDFI022	AAFY018A	FBFI021	AETE137	AAPTOO6	FDPT002	FDTT002	FDPT022
		Generator	Generator	13.8 kv	13.8 kv	FW Flow	SH Spray	Sootblower	SCR	Cont.	MS to Aux	Feedwater	Selected	Sootblower	Sootblower	A.H.
		Megawatts	Megavars	NAA01 Gen	NAA02 Gen	Comp.	Flow	Steam	Sootblower	Blowdown	Stm. Flow	Temp.	Drum	Steam	Steam	Sootblower
				Aux Load	Aux Load			Flow	Stm Flow	Flow			Pressure	Pressure	Temp.	Stm. Press
DATE	TIME	MW	MVAR	MW	MW	KPPH	KPPH	KPPH	KPPH	PCT	KPPH	DEG F	PSIG	PSIG	DEG F	PSIG
03/04/03	16:14:00	194.519028	20.1659851	14.0057373	7.23083496	1449.55151	83.5509186	0	2.05734634	0	0	429.286896	2473.54102	315.795868	639.709473	382.93457
03/04/03	16:15:00	194.519028	20.1659851	14.0057373	7.58789015	1415.56787	46.7007561	0	2.05734634	0	0	429.286896	2473.54102	315.795868	639.709473	382.93457
03/04/03	16:16:00	194.519028	20.1659851	13.6853018	7.60620117	1415.56787	47.1493912	0	2.05734634	0	0	429.286896	2473.54102	315.795868	639.709473	382.93457
03/04/03	16:17:00	194.519028	20.1659851	13.6853018	7.02941895	1415.56787	71.9048538	0	2.05734634	0	0	429.286896	2473.54102	315.795868	639.709473	382.93457
03/04/03	16:18:00	194.519028	20.1659851	13.9874258	7.02941895	1415.56787	66.4262314	0	2.05734634	0	0	429.286896	2473.54102	315.795868	639.709473	382.93457
03/04/03	16:19:00	194.519028	20.1659851	13.9874258	7.64282131	1414.87646	75.3362503	0	2.05734634	0	0	429.286896	2473.54102	315.795868	639.709473	382.93457
03/04/03	16:20:00	194.519028	20.1659851	13.657836	7.64282131	1414.87646	86.2780228	0	2.05734634	0	0	429.286896	2473.54102	315.795868	639.709473	382.93457
03/04/03	16:21:00	194.519028	20.1659851	13.657836	7.64282131	1408.45972	46.7007561	0	2.05734634	0	0	429.286896	2473.54102	315.795868	639.709473	382.93457
03/04/03	16:22:00	194.519028	20.1659851	13.657836	7.64282131	1408.45972	47.5937576	0	2.05734634	0	0	429.286896	2473.54102	315.795868	639.709473	382.93457
03/04/03	16:23:00	194.519028	20.1659851	13.95996	7.64282131	1408.45972	71.6114807	0	2.05734634	0	0	429.286896	2473.54102	315.795868	639.709473	382.93457
03/04/03	16:24:00	194.519028	20.1659851	13.95996	7.34069729	1408.45972	69.8253632	0	2.05734634	0	0	429.286896	2473.54102	315.795868	639.709473	382.93457
03/04/03	16:25:00	194.519028	20.1659851	13.95996	7.20336866	1414.94836	75.0562744	0	2.05734634	0	0	429.286896	2473.54102	315.795868	639.709473	382.93457
03/04/03	16:26:00	194.519028	20.1659851	13.95996	7.3132329	1347.23572	89.6289215	0	2.05734634	0	0	429.286896	2473.54102	315.795868	639.709473	382.93457
03/04/03	16:27:00	194.519028	20.1659851	13.95996	7.00195217	1383.95972	85.78862	0	2.05734634	0	0	429.286896	2473.54102	315.795868	639.709473	382.93457
03/04/03	16:28:00	194.519028	20.1659851	13.95996	7.00195217	1383.95972	47.1493912	0	2.05734634	0	0	429.286896	2473.54102	315.795868	639.709473	382.93457
03/04/03	16:29:00	194.519028	20.1659851	13.95996	7.60620117	1383.95972	47.5937576	0	2.05734634	0	0	429.286896	2473.54102	315.795868	639.709473	382.93457
03/04/03	16:30:00	194.519028	20.1659851	13.95996	7.60620117	1383.95972	72.1970139	0	2.05734634	0	0	429.286896	2473.54102	315.795868	639.709473	382.93457
03/04/03	16:31:00	194.519028	20.1659851	13.95996	7.60620117	1414.36865	67.3702698	0	2.05734634	0	0	429.286896	2473.54102	315.795868	639.709473	382.93457
03/04/03	16:32:00	194.519028	20.1659851	13.95996	7.60620117	1383.33972	76.1699371	0	2.05734634	0	0	429.286896	2473.54102	315.795868	639.709473	382.93457
03/04/03	16:33:00	194.519028	20.1659851	13.95996	7.60620117	1418.74048	86.5216599	0	2.05734634	0	0	429.286896	2473.54102	315.795868	639.709473	382.93457
03/04/03	16:34:00	194.519028	20.1659851	13.95996	7.32238817	1418.74048	87.248558	0	2.05734634	0	0	429.286896	2473.54102	315.795868	639.709473	382.93457
03/04/03	16:35:00	194.519028	20.1659851	13.95996	7.63366604	1421.81189	45.7903023	0	2.05734634	0	0	429.286896	2473.54102	315.795868	639.709473	382.93457
03/04/03	16:36:00	194.519028	20.1659851	13.95996	7.04772902	1389.25647	47.5937576	0	2.05734634	0	0	429.286896	2473.54102	315.795868	639.709473	382.93457
03/04/03	16:37:00	194.519028	20.1659851	13.95996	7.04772902	1420.56189	67.3702698	0	2.05734634	0	0	429.286896	2473.54102	315.795868	639.709473	382.93457
03/04/03	16:38:00	194.519028	20.1659851	13.95996	7.4322505	1420.56189	67.0570908	0	2.05734634	0	0	429.286896	2473.54102	315.795868	639.709473	382.93457
03/04/03	16:39:00	194.519028	20.1659851	13.95996	7.4322505	1420.56189	79.4172516	0	2.05734634	0	0	429.286896	2473.54102	315.795868	639.709473	382.93457
03/04/03	16:40:00	194.519028	20.1659851	13.95996	7.4322505	1388.23779	90.7957153	0	2.05734634	0	0	429.286896	2473.54102	315.795868	639.709473	382.93457
03/04/03	16:41:00	194.519028	20.1659851	13.95996	7.4322505	1418.53772	45.7903023	0	2.05734634	0	0	429.286896	2473.54102	315.795868	639.709473	382.93457
03/04/03	16:42:00	194.519028	20.1659851	13.95996	7.4322505	1418.53772	46.7007561	0	2.05734634	0	0	429.286896	2473.54102	315.795868	639.709473	382.93457
03/04/03	16:43:00	194.519028	20.1659851	13.95996	7.6245122	1393.83057	69.8253632	0	2.05734634	0	0	429.286896	2473.54102	315.795868	639.709473	382.93457
03/04/03	16:44:00	194.519028	20.1659851	13.95996	7.0202632	1362.29834	69.8253632	0	2.05734634	0	0	429.286896	2473.54102	315.795868	639.709473	382.93457
03/04/03	16:45:00	194.519028	20.1659851	13.95996	6.99279785	1394.85327	53.4286079	0	2.05734634	0	0	429.286896	2473.54102	315.795868	639.709473	382.93457
03/04/03	16:46:00	194.519028	20.1659851	13.95996	7.0202632	1394.85327	84.801384	0	2.05734634	0	0	429.286896	2473.54102	315.795868	639.709473	382.93457
03/04/03	16:47:00	194.519028	20.1659851	13.95996	7.35900831	1425.64966	86.0336761	0	2.05734634	0	0	429.286896	2473.54102	315.795868	639.709473	382.93457
03/04/03	16:48:00	194.519028	20.1659851	13.95996	7.66113234	1425.64966	46.2477722	0	2.05734634	0	0	429.286896	2473.54102	315.795868	639.709473	382.93457
03/04/03	16:49:00	194.519028	20.1659851	13.95996	7.66113234	1425.64966	47.1493912	0	2.05734634	0	0	429.286896	2473.54102	315.795868	639.709473	382.93457
03/04/03	16:50:00	194.519028	20.1659851	13.95996	7.66113234	1396.95166	68.9149628	0	2.05734634	0	0	429.286896	2473.54102	315.795868	639.709473	382.93457
03/04/03	16:51:00	194.519028	20.1659851	13.95996	7.66113234	1372.91028	69.8253632	0	2.05734634	0	0	429.286896	2473.54102	315.795868	639.709473	382.93457
03/04/03	16:52:00	194.519028	20.1659851	13.95996	7.32238817	1406.88623	80.2085419	0	2.05734634	0	0	429.286896	2473.54102	315.795868	639.709473	382.93457
03/04/03	16:53:00	194.519028	20.1659851	13.95996	7.55127001	1376.0708	88.9215012	0	2.05734634	0	0	429.286896	2473.54102	315.795868	639.709473	382.93457
03/04/03	16:54:00	194.519028	20.1659851	13.95996	7.6245122	1412.03638	69.8253632	0	2.05734634	0	0	429.286896	2473.54102	315.795868	639.709473	382.93457
03/04/03	16:55:00	194.519028	20.1659851	13.95996	7.02941895	1380.95203	48.03405	0	2.05734634	0	0	429.286896	2473.54102	315.795868	639.709473	382.93457
03/04/03	16:56:00	194.519028	20.1659851	13.95996	7.02941895	1380.95203	78.8853302	0	2.05734634	0	0	429.286896	2473.54102	315.795868	639.709473	382.93457
03/04/03	16:57:00	194.519028	20.1659851	13.95996	7.4597168	1380.95203	70.4257736	0	2.05734634	0	0	429.286896	2473.54102	315.795868	639.709473	382.93457
03/04/03	16:58:00	194.519028	20.1659851	13.95996	7.4597168	1380.95203	57.5999374	0	2.05734634	0	0	429.286896	2473.54102	315.795868	639.709473	382.93457
03/04/03	16:59:00	194.519028	20.1659851	13.95996	7.4597168	1411.69751	88.4467545	0	2.05734634	0	0	429.286896	2473.54102	315.795868	639.709473	382.93457
03/04/03	17:00:00	194.519028	20.1659851	13.95996	7.4597168	1411.69751	90.3308182	0	2.05734634	0	0	429.286896	2473.54102	315.795868	639.709473	382.93457

DATE	TIME	FDTT022 SCR/AH Sootblower Stm Temp DEG F	ABPIOO7 Turbine Throttle Pressure PSIG	ABTE008 Main Stm Temp DEG F	AEFI111 Reheater Spray Flow KPPH	ABPI010 Cold Reheat Stm Press PSIG	ABTE016 Cold Reheat Temp DEG F	ABPT024 Hot Reheat Pressure PSIG	ABTE022 Hot Reheat Temp DEG F	AETE119 BFP Hdr Discharge Temp DEG F	AETE130 FW Htr #7 Outlet Temp DEG F	AETE035 FW Htr #7 Casc Drain Temp DEG F	AFPT026 Cold Reheat Ext Hdr Press PSIG	AFTE027 Cold Reheat Ext Hdr Temp DEG F	AFTI017 HP Aux Steam Temp DEG F	AFFI017 Spray Flow to HP Aux Steam KPPH
03/04/03	16:14:00	776.428223	2395.75195	971.701782	0	327.538208	581.321045	308.166473	941.729736	356.920227	428.410034	358.959229	323.120087	574.7453	387.134216	0
03/04/03	16:15:00	786.499023	2399.41382	971.63446	0	327.538208	581.321045	308.166473	941.729736	356.920227	428.410034	358.959229	323.120087	574.7453	387.134216	0
03/04/03	16:16:00	786.499023	2402.16064	971.612	0	327.538208	581.321045	308.166473	941.729736	356.920227	428.410034	358.959229	323.120087	574.7453	387.134216	0
03/04/03	16:17:00	786.499023	2402.16064	969.967529	0	327.538208	581.321045	308.166473	941.729736	356.920227	428.410034	358.959229	323.120087	574.7453	387.134216	0
03/04/03	16:18:00	786.499023	2397.58301	969.967529	0	327.538208	581.321045	308.166473	941.729736	356.920227	428.410034	358.959229	323.120087	574.7453	387.134216	0
03/04/03	16:19:00	786.499023	2393.9209	968.289551	0	327.538208	581.321045	308.166473	942.161804	356.920227	428.410034	358.959229	323.120087	574.7453	387.134216	0
03/04/03	16:20:00	786.499023	2391.17407	969.911438	0	327.538208	581.321045	308.166473	940.517822	356.920227	428.410034	358.959229	323.120087	574.7453	387.134216	0
03/04/03	16:21:00	786.499023	2387.51221	969.911438	0	327.538208	581.321045	308.166473	942.128235	356.920227	428.410034	358.959229	323.120087	574.7453	387.134216	0
03/04/03	16:22:00	786.499023	2390.25879	971.488708	0	327.538208	581.321045	308.166473	942.128235	356.920227	428.410034	358.959229	323.120087	574.7453	387.134216	0
03/04/03	16:23:00	786.499023	2397.58301	973.088379	0	327.538208	581.321045	308.166473	943.693848	356.920227	428.410034	358.959229	323.120087	574.7453	387.134216	0
03/04/03	16:24:00	786.499023	2397.58301	971.443848	0	327.538208	581.321045	308.166473	942.060974	356.920227	428.410034	358.959229	323.120087	582.551086	387.134216	0
03/04/03	16:25:00	786.499023	2397.58301	973.077148	0	327.538208	581.321045	308.166473	942.060974	356.920227	428.410034	358.959229	323.120087	582.551086	387.134216	0
03/04/03	16:26:00	786.499023	2397.58301	973.077148	0	327.538208	581.321045	308.166473	942.060974	356.920227	428.410034	358.959229	323.120087	582.551086	387.134216	0
03/04/03	16:27:00	786.499023	2396.66748	971.387695	0	327.538208	581.321045	308.166473	942.060974	356.920227	428.410034	358.959229	323.120087	582.551086	387.134216	0
03/04/03	16:28:00	786.499023	2400.32959	971.387695	0	327.538208	581.321045	308.166473	942.060974	356.920227	428.410034	358.959229	323.120087	582.551086	387.134216	0
03/04/03	16:29:00	786.499023	2405.82251	972.987427	0	327.538208	581.321045	308.166473	943.592896	356.920227	428.410034	358.959229	323.120087	582.551086	387.134216	0
03/04/03	16:30:00	786.499023	2404.90723	972.987427	0	327.538208	581.321045	308.166473	943.592896	356.920227	428.410034	358.959229	323.120087	582.551086	387.134216	0
03/04/03	16:31:00	786.499023	2404.90723	972.987427	0	327.538208	581.321045	308.166473	943.592896	356.920227	428.410034	358.959229	323.120087	582.551086	387.134216	0
03/04/03	16:32:00	786.499023	2404.90723	972.987427	0	327.538208	581.321045	308.166473	943.592896	356.920227	428.410034	358.959229	323.120087	582.551086	387.134216	0
03/04/03	16:33:00	786.499023	2404.90723	972.987427	0	327.538208	581.321045	308.166473	943.592896	356.920227	428.410034	358.959229	323.120087	582.551086	387.134216	0
03/04/03	16:34:00	786.499023	2401.24487	971.309204	0	327.538208	581.321045	308.166473	943.592896	356.920227	428.410034	358.959229	323.120087	582.551086	387.134216	0
03/04/03	16:35:00	786.499023	2408.56934	971.309204	0	327.538208	581.321045	308.166473	941.892761	356.920227	428.410034	358.959229	323.120087	582.551086	387.134216	0
03/04/03	16:36:00	786.499023	2404.90723	971.309204	0	327.538208	581.321045	308.166473	941.892761	356.920227	428.410034	358.959229	323.120087	582.551086	387.134216	0
03/04/03	16:37:00	786.499023	2404.90723	971.309204	0	327.538208	581.321045	308.166473	941.892761	356.920227	428.410034	358.959229	323.120087	582.551086	387.134216	0
03/04/03	16:38:00	786.499023	2401.24487	969.631104	0	327.538208	581.321045	308.166473	940.237488	356.920227	428.410034	358.959229	323.120087	582.551086	387.134216	0
03/04/03	16:39:00	786.499023	2401.24487	972.875183	0	327.538208	581.321045	308.166473	940.237488	356.920227	428.410034	358.959229	323.120087	582.551086	387.134216	0
03/04/03	16:40:00	786.499023	2401.24487	972.875183	0	327.538208	581.321045	308.166473	940.237488	356.920227	428.410034	358.959229	323.120087	582.551086	387.134216	0
03/04/03	16:41:00	786.499023	2397.58301	972.875183	0	327.538208	581.321045	308.166473	940.237488	356.920227	428.410034	358.959229	323.120087	582.551086	387.134216	0
03/04/03	16:42:00	786.499023	2397.58301	974.519775	0	327.538208	581.321045	308.166473	940.237488	356.920227	428.410034	358.959229	323.120087	582.551086	387.134216	0
03/04/03	16:43:00	786.499023	2404.90723	974.519775	0	327.538208	581.321045	308.166473	940.237488	356.920227	428.410034	358.959229	323.120087	582.551086	387.134216	0
03/04/03	16:44:00	786.499023	2404.90723	974.519775	0	327.538208	581.321045	308.166473	940.226379	356.920227	428.410034	358.959229	323.120087	582.551086	387.134216	0
03/04/03	16:45:00	786.499023	2404.90723	972.908997	0	327.538208	581.321045	308.166473	940.226379	356.920227	428.410034	358.959229	323.120087	582.551086	387.134216	0
03/04/03	16:46:00	786.499023	2401.24487	974.553528	0	327.538208	581.321045	308.166473	940.226379	356.920227	428.410034	358.959229	323.120087	582.551086	387.134216	0
03/04/03	16:47:00	786.499023	2397.58301	972.908997	0	327.538208	581.321045	308.166473	940.260071	356.920227	428.410034	358.959229	323.120087	582.551086	387.134216	0
03/04/03	16:48:00	786.499023	2401.24487	972.908997	0	327.538208	581.321045	308.166473	940.260071	356.920227	428.410034	358.959229	323.120087	582.551086	387.134216	0
03/04/03	16:49:00	786.499023	2397.58301	972.908997	0	327.538208	581.321045	308.166473	940.215149	356.920227	428.410034	358.959229	323.120087	582.551086	387.134216	0
03/04/03	16:50:00	786.499023	2397.58301	972.908997	0	327.538208	581.321045	308.166473	941.83667	356.920227	428.410034	358.959229	323.120087	582.551086	387.134216	0
03/04/03	16:51:00	786.499023	2398.49854	972.908997	0	327.538208	581.321045	308.166473	941.83667	356.920227	428.410034	358.959229	323.120087	582.551086	387.134216	0
03/04/03	16:52:00	786.499023	2394.83618	972.908997	0	327.538208	581.321045	308.166473	941.83667	356.920227	428.410034	358.959229	323.120087	582.551086	387.134216	0
03/04/03	16:53:00	786.499023	2394.83618	972.908997	0	327.538208	581.321045	308.166473	941.825439	356.920227	428.410034	358.959229	323.120087	582.551086	387.134216	0
03/04/03	16:54:00	786.499023	2394.83618	972.908997	0	327.538208	581.321045	308.166473	941.825439	356.920227	428.410034	358.959229	323.120087	582.551086	387.134216	0
03/04/03	16:55:00	786.499023	2394.83618	972.908997	0	327.538208	581.321045	308.166473	941.825439	356.920227	428.410034	358.959229	323.120087	582.551086	387.134216	0
03/04/03	16:56:00	786.499023	2402.16064	972.807922	0	327.538208	581.321045	308.166473	941.825439	356.920227	428.410034	358.959229	323.120087	582.551086	387.134216	0
03/04/03	16:57:00	786.499023	2398.49854	972.807922	0	327.538208	581.321045	308.166473	941.825439	356.920227	428.410034	358.959229	323.120087	582.551086	387.134216	0
03/04/03	16:58:00	786.499023	2402.16064	972.807922	0	327.538208	581.321045	308.166473	941.825439	356.920227	428.410034	358.959229	323.120087	582.551086	387.134216	0
03/04/03	16:59:00	786.499023	2397.58301	974.418884	0	327.538208	581.321045	308.166473	940.125427	356.920227	428.410034	358.959229	323.120087	582.551086	387.134216	0
03/04/03	17:00:00	786.499023	2397.58301	974.418884	0	327.538208	581.321045	308.166473	940.125427	356.920227	428.410034	358.959229	323.120087	582.551086	387.134216	0

DATE	TIME	AETE055 BFBP Discharge Hdr Temp DEG F	AFPY044A DA Pegging Stm Valve PCT	ASFI006 Caulkins LP Stm Flow Output KPPH	ASFI016 Caulkins HP Stm Flow Output KPPH	MAJI002 Unit Megavars MVAR	MAJI004 Unit Megawatts MW	ADPT003C Absolute Cond Vac Calculated IN HGA	DALT004A Cooling Twr Basin Level IN	DAFI027 Cooling Twr Blow-Down Flow GPM	EAFI034 Cooling Twr Blow-Down SDA GPM	DATE014A Water Box Inlet A Temp DEG F	DATE014B Water Box Inlet B Temp DEG F	DATE016A Water Box Outlet A Temp DEG F	DATE016B Water Box Outlet B Temp DEG F	ABFI018 Main Steam Flow KPPH
03/04/03	16:14:00	250.296509	0	109.175049	15.1892004	-4.4555569	176.513672	2.48046875	56.6162071	0	278.758881	86.7630844	86.7922745	99.2973404	99.8487854	1441.79626
03/04/03	16:15:00	250.296509	0	109.175049	14.8967142	-4.4555569	176.513672	2.48046875	56.6162071	0	278.758881	88.1849594	88.1849594	99.2973404	99.8487854	1441.79626
03/04/03	16:16:00	250.296509	0	109.175049	15.3904638	-4.4555569	176.513672	2.48046875	56.6162071	0	282.058258	86.7630844	86.7630844	99.2973404	99.8487854	1441.79626
03/04/03	16:17:00	250.296509	0	109.175049	15.3904638	-4.4555569	176.513672	2.48046875	56.6162071	0	285.319336	88.1703644	86.7630844	99.2973404	99.8487854	1441.79626
03/04/03	16:18:00	250.296509	0	109.175049	14.9791002	-4.4555569	176.513672	2.48046875	56.6162071	0	288.543457	88.1557159	86.7338104	99.2973404	99.8487854	1441.79626
03/04/03	16:19:00	250.296509	0	113.489464	14.8856773	-4.4555569	176.513672	2.48046875	56.6162071	0	295.204437	86.7338104	86.7338104	99.2973404	99.8487854	1441.79626
03/04/03	16:20:00	250.296509	0	115.523895	14.8856773	-4.4555569	176.513672	2.48046875	56.6162071	0	301.717896	86.7338104	86.7338104	99.2973404	99.8487854	1441.79626
03/04/03	16:21:00	250.296509	0	115.523895	15.3131485	-4.4555569	176.513672	2.48046875	56.6162071	0	308.144104	88.1264801	86.7338104	99.2973404	99.8487854	1441.79626
03/04/03	16:22:00	250.296509	0	110.344467	15.3131485	-4.4555569	176.513672	2.48046875	56.6162071	0	311.433167	88.0971756	88.1118317	99.2973404	99.8487854	1441.79626
03/04/03	16:23:00	250.296509	0	110.344467	14.9024076	-4.4555569	176.513672	2.48046875	56.6162071	0	314.637909	86.675209	86.675209	99.2973404	99.8487854	1441.79626
03/04/03	16:24:00	250.296509	0	108.3153	14.771596	-4.4555569	176.513672	2.48046875	56.6162071	0	317.859589	88.0825806	86.675209	99.2973404	99.8487854	1441.79626
03/04/03	16:25:00	250.296509	0	108.3153	15.1998539	-4.4555569	176.513672	2.48046875	56.6162071	0	317.859589	88.0825806	87.3717651	99.2973404	99.8487854	1441.79626
03/04/03	16:26:00	250.296509	0	108.3153	15.4177418	-4.4555569	176.513672	2.48046875	56.1181602	0	317.859589	86.6459961	87.3717651	99.2973404	99.8487854	1441.79626
03/04/03	16:27:00	250.296509	0	108.3153	16.8070431	-4.4555569	176.513672	2.48046875	56.1181602	0	314.588104	86.6605988	87.3717651	99.2973404	99.8487854	1441.79626
03/04/03	16:28:00	250.296509	0	114.952324	15.9806833	-4.4555569	176.513672	2.48046875	56.1181602	0	308.093231	86.6605988	87.3571701	99.2973404	99.8487854	1441.79626
03/04/03	16:29:00	250.296509	0	114.952324	15.3723593	-4.4555569	176.513672	2.48046875	56.1181602	0	298.268799	88.0679932	87.3571701	99.2973404	99.8487854	1441.79626
03/04/03	16:30:00	250.296509	0	114.952324	15.4179974	-4.4555569	176.513672	2.48046875	56.1181602	0	291.839294	86.6459961	87.3571701	99.2973404	99.8487854	1441.79626
03/04/03	16:31:00	250.296509	0	114.952324	15.8961115	-4.4555569	176.513672	2.48046875	56.1181602	0	282.113861	86.6167221	87.3571701	99.2973404	99.8487854	1441.79626
03/04/03	16:32:00	250.296509	0	112.831596	15.8961115	-4.4555569	176.513672	2.48046875	56.1181602	0	268.616791	88.0387497	87.3571701	99.2973404	99.8487854	1441.79626
03/04/03	16:33:00	250.296509	0	110.75032	15.4863119	-4.4555569	176.513672	2.48046875	56.1181602	0	255.140701	86.6167221	87.3571701	99.2973404	99.8487854	1441.79626
03/04/03	16:34:00	250.296509	0	110.75032	15.388772	-4.4555569	176.513672	2.48046875	56.1181602	0	245.23349	88.0388031	87.3571701	99.2973404	99.8487854	1441.79626
03/04/03	16:35:00	250.296509	0	110.75032	15.8335505	-4.4555569	176.513672	2.48046875	56.1181602	0	235.440811	88.0241623	87.3571701	99.2973404	99.8487854	1441.79626
03/04/03	16:36:00	250.296509	0	110.75032	15.8335505	-4.4555569	176.513672	2.48046875	56.1181602	0	232.151993	88.0241623	87.3571701	99.2973404	99.8487854	1441.79626
03/04/03	16:37:00	250.296509	0	115.456062	15.4247389	-4.4555569	176.513672	2.48046875	56.1181602	0	225.638596	87.9949112	87.3571701	99.2973404	99.8487854	1441.79626
03/04/03	16:38:00	250.296509	0	115.456062	14.8776436	-4.4555569	176.513672	2.48046875	56.1181602	0	222.415894	86.5874405	87.298645	99.2973404	99.8487854	1441.79626
03/04/03	16:39:00	250.296509	0	115.456062	15.3747168	-4.4555569	176.513672	2.48046875	56.1181602	0	215.898224	87.9949112	87.298645	99.2973404	99.8487854	1441.79626
03/04/03	16:40:00	250.296509	0	115.456062	15.3747168	-4.4555569	176.513672	2.48046875	56.1181602	0	205.847488	87.9949112	87.298645	99.2973404	99.8487854	1440.76465
03/04/03	16:41:00	250.296509	0	113.298439	15.8917685	-4.4555569	176.513672	2.48046875	56.1181602	0	192.605057	87.9803085	87.298645	99.2973404	99.8487854	1440.76465
03/04/03	16:42:00	250.296509	0	113.298439	15.5349855	-4.4555569	176.513672	2.48046875	56.1181602	0	179.430649	87.9803085	87.298645	99.2973404	99.8487854	1440.76465
03/04/03	16:43:00	250.296509	0	113.298439	15.5349855	-4.4555569	176.513672	2.48046875	55.6347656	0	169.615677	87.9949646	87.298645	99.2973404	99.8487854	1440.76465
03/04/03	16:44:00	250.296509	0	113.298439	15.4040432	-4.4555569	176.513672	2.48046875	55.6347656	0	166.340561	87.9949646	87.298645	99.2973404	99.8487854	1440.76465
03/04/03	16:45:00	250.296509	0	113.298439	15.382575	-4.4555569	176.513672	2.48046875	55.6347656	0	166.340561	87.9949646	87.298645	99.2973404	99.8487854	1440.76465
03/04/03	16:46:00	250.296509	0	113.298439	15.9434385	-4.4555569	176.513672	2.48046875	55.6347656	0	159.784439	87.9949646	87.298645	99.2973404	99.8487854	1440.76465
03/04/03	16:47:00	250.296509	0	113.298439	15.9434385	-4.4555569	176.513672	2.48046875	55.6347656	0	156.503204	87.9949646	87.298645	99.2973404	99.8487854	1440.76465
03/04/03	16:48:00	250.296509	0	117.608116	15.5307932	-4.4555569	176.513672	2.48046875	55.6347656	0	153.253891	87.9657135	87.298645	99.2973404	99.8487854	1440.76465
03/04/03	16:49:00	250.296509	0	117.608116	15.5235729	-4.4555569	176.513672	2.48046875	55.6347656	0	150.038574	87.9510574	87.298645	99.2973404	99.8487854	1440.76465
03/04/03	16:50:00	250.296509	0	117.608116	15.9474382	-4.4555569	176.513672	2.48046875	55.6347656	0	150.038574	87.9510574	87.298645	99.2973404	99.8487854	1440.76465
03/04/03	16:51:00	250.296509	0	117.608116	15.5265417	-4.4555569	176.513672	2.48046875	55.6347656	0	156.503204	86.5289459	87.298645	99.2973404	99.8487854	1440.76465
03/04/03	16:52:00	250.296509	0	112.712608	15.8776617	-4.4555569	176.513672	2.48046875	55.6347656	0	166.246033	87.93647	87.298645	99.2973404	99.8487854	1440.76465
03/04/03	16:53:00	250.296509	0	112.712608	15.7626925	-4.4555569	176.513672	2.48046875	55.6347656	0	176.071411	87.93647	87.298645	99.2973404	99.8487854	1440.76465
03/04/03	16:54:00	250.296509	0	112.712608	15.7098265	-4.4555569	176.513672	2.48046875	55.6347656	0	185.966217	87.93647	87.298645	99.2973404	99.8487854	1440.76465
03/04/03	16:55:00	250.296509	0	112.712608	15.7098265	-4.4555569	176.513672	2.48046875	55.6347656	0	189.231888	87.93647	87.298645	99.2973404	99.8487854	1440.76465
03/04/03	16:56:00	250.296509	0	105.540649	15.7098265	-4.4555569	176.513672	2.48046875	55.6347656	0	192.441895	87.93647	87.298645	99.2973404	99.8487854	1440.76465
03/04/03	16:57:00	250.296509	0	98.5786743	15.9761429	-4.4555569	176.513672	2.48046875	55.6347656	0	192.441895	87.93647	87.298645	99.2973404	99.8487854	1440.76465
03/04/03	16:58:00	250.296509	0	96.560524	15.9761429	-4.4555569	176.513672	2.48046875	55.6347656	0	195.67923	87.93647	87.298645	99.2973404	99.8487854	1440.76465
03/04/03	16:59:00	250.296509	0	94.4296417	15.5895548	-4.4555569	176.513672	2.48046875	55.6347656	0	195.67923	87.93647	87.298645	99.2973404	99.8487854	1440.76465
03/04/03	17:00:00	250.296509	0	94.4296417	15.6111765	-4.4555569	176.513672	2.48046875	55.6347656	0	198.942535	87.93647	87.298645	99.2973404	99.8487854	1440.76465

DATE	TIME	MBEL100 Excitation Losses KW	BATI013 AH Gas Outlet Temp DEG F	BAAI046 Excess Oxygen PCT	RMAT500 Relative Humidity PCT	BATI011 AH Air Inlet Temp DEG F	JCFT152 Coal Fdr A Flow Rate KPPH	JCFT252 Coal Fdr B Flow Rate KPPH	JCFT352 Coal Fdr C Flow Rate KPPH	JCFT452 Coal Fdr D Flow Rate KPPH	NAET102 13.8 Kv NAA01 Aux Scr Volts VOLTS	NAET202 13.8 Kv NAAO2 Aux Scr Volts VOLTS	NAIT101 13.8 Kv NAAO1 Aux Scr Current AMPS	NAIT201 13.8 Kv NAA02 Aux Scr Current AMPS	MAII006A Generator Arm Current Phase A KA	MAII006B Generator Arm Current Phase B KA
03/04/03	16:14:00	585.394714	262.987396	3.90175629	1.55029237	106.889542	80.8953857	0.06042493	80.9960938	-0.0067153	13687.8662	13885.6191	708.17865	369.799774	4.65234327	4.69628859
03/04/03	16:15:00	585.394714	262.987396	3.64872122	2.55737233	106.889542	76.7327881	0.06042493	76.3970871	-0.0067153	13687.8662	13885.6191	708.17865	382.983398	4.65234327	4.69628859
03/04/03	16:16:00	585.394714	262.987396	3.90167975	2.64892411	106.889542	74.0808105	0.06042493	73.3758545	-0.0067153	13687.8662	13885.6191	696.093689	367.236298	4.65234327	4.69628859
03/04/03	16:17:00	585.394714	262.987396	3.90167975	3.68652225	106.889542	74.4500732	0.06042493	75.1550293	-0.0067153	13687.8662	13885.6191	696.093689	368.334961	4.65234327	4.69628859
03/04/03	16:18:00	585.394714	262.987396	3.90167975	3.68652225	106.889542	75.8599854	0.06042493	76.0613937	-0.0067153	13687.8662	13885.6191	708.911133	368.334961	4.65234327	4.69628859
03/04/03	16:19:00	585.394714	262.987396	3.90167975	3.68652225	106.889542	77.5048752	0.06042493	78.6462402	-0.0067153	13687.8662	13885.6191	708.911133	380.419922	4.65234327	4.69628859
03/04/03	16:20:00	585.394714	262.987396	3.90167975	4.87670898	106.889542	81.9696045	0.06042493	83.0773849	-0.0067153	13687.8662	13885.6191	696.826172	380.419922	4.65234327	4.69628859
03/04/03	16:21:00	585.394714	262.987396	3.90167975	5.91430712	106.889542	84.2523193	0.09399503	82.9766846	-0.0067153	13687.8662	13885.6191	696.826172	380.419922	4.65234327	4.69628859
03/04/03	16:22:00	585.394714	262.987396	3.63072014	4.90722704	106.889542	82.1038742	0.09399503	81.9024658	-0.0067153	13687.8662	13885.6191	710.009766	380.419922	4.65234327	4.69628859
03/04/03	16:23:00	585.394714	262.987396	3.63208508	3.90014434	106.889542	73.8122482	0.09399503	73.6444092	-0.0067153	13687.8662	13885.6191	710.009766	380.419922	4.65234327	4.69628859
03/04/03	16:24:00	585.394714	262.987396	3.88714385	4.90722704	106.889542	72.8723145	0.09399503	74.2150879	-0.0067153	13687.8662	13885.6191	710.009766	380.419922	4.65234327	4.69628859
03/04/03	16:25:00	585.394714	262.987396	3.89415598	3.65600395	106.889542	75.9606934	0.09399503	77.2027512	-0.0067153	13687.8662	13885.6191	710.009766	380.419922	4.65234327	4.69628859
03/04/03	16:26:00	585.394714	262.987396	3.89415598	6.95190239	106.889542	75.1885986	0.09399503	76.1621094	-0.0067153	13687.8662	13885.6191	710.009766	380.419922	4.65234327	4.69628859
03/04/03	16:27:00	585.394714	262.987396	3.9042089	8.99658012	106.889542	80.8618088	0.09399503	79.7540207	-0.0067153	13687.8662	13885.6191	710.009766	363.940399	4.65234327	4.69628859
03/04/03	16:28:00	585.394714	262.987396	3.6424377	6.92138672	106.889542	75.6585693	0.09399503	75.725708	-0.0067153	13687.8662	13885.6191	710.009766	363.940399	4.65234327	4.69628859
03/04/03	16:29:00	585.394714	262.987396	3.63968515	6.92138672	106.889542	70.791008	0.09399503	69.4818115	-0.0067153	13687.8662	13885.6191	710.009766	378.222687	4.65234327	4.69628859
03/04/03	16:30:00	585.394714	262.987396	3.89193082	7.9284668	106.889542	73.4765625	0.09399503	71.8652267	-0.0067153	13687.8662	13885.6191	710.009766	378.222687	4.65234327	4.69628859
03/04/03	16:31:00	585.394714	262.987396	3.64101863	7.9284668	106.889542	70.7574387	0.09399503	70.5895996	-0.0067153	13687.8662	13885.6191	710.009766	378.222687	4.65234327	4.69628859
03/04/03	16:32:00	585.394714	262.987396	3.8918004	6.61620998	106.889542	71.2609863	0.09399503	71.9659424	-0.0067153	13687.8662	13885.6191	710.009766	378.222687	4.65234327	4.69628859
03/04/03	16:33:00	585.394714	262.987396	3.8918004	6.61620998	106.889542	71.932373	0.09399503	72.3016357	-0.0067153	13687.8662	13885.6191	710.009766	378.222687	4.65234327	4.69628859
03/04/03	16:34:00	585.394714	262.987396	4.14948416	8.90502834	106.889542	78.9147873	0.09399503	78.9819336	-0.0067153	13687.8662	13885.6191	710.009766	378.222687	4.65234327	4.69628859
03/04/03	16:35:00	585.394714	262.987396	3.87559748	7.71484184	106.889542	72.1673508	0.09399503	71.932373	-0.0067153	13687.8662	13885.6191	710.009766	378.222687	4.65234327	4.69628859
03/04/03	16:36:00	585.394714	262.987396	4.14513206	5.57861185	106.889542	73.5436935	0.09399503	74.1143723	-0.0067153	13687.8662	13885.6191	710.009766	365.771484	4.65234327	4.69628859
03/04/03	16:37:00	585.394714	262.987396	4.14513206	6.67724657	106.889542	74.685051	0.09399503	77.5720215	-0.0067153	13687.8662	13885.6191	710.009766	365.771484	4.65234327	4.69628859
03/04/03	16:38:00	585.394714	262.987396	4.14513206	6.67724657	106.889542	75.5578537	0.09399503	75.2557297	-0.0067153	13687.8662	13885.6191	710.009766	377.856445	4.65234327	4.69628859
03/04/03	16:39:00	585.394714	262.987396	3.89496112	8.90502834	106.889542	76.1956787	0.09399503	75.7928391	-0.0067153	13687.8662	13885.6191	710.009766	377.856445	4.65234327	4.69628859
03/04/03	16:40:00	585.394714	262.987396	3.89496112	9.91210842	106.889542	74.7186203	0.09399503	74.6514816	-0.0067153	13687.8662	13885.6191	710.009766	377.856445	4.65234327	4.69628859
03/04/03	16:41:00	585.394714	262.987396	4.1527791	8.38622952	106.889542	79.921875	0.09399503	79.8547363	-0.0067153	13687.8662	13885.6191	710.009766	377.856445	4.65234327	4.69628859
03/04/03	16:42:00	585.394714	262.987396	3.63889527	6.03637695	106.889542	73.7115479	0.09399503	77.7734299	-0.0067153	13687.8662	13885.6191	710.009766	377.856445	4.65234327	4.69628859
03/04/03	16:43:00	585.394714	262.987396	3.63248587	7.10449076	106.889542	68.0047531	0.09399503	67.8369141	-0.0067153	13687.8662	13885.6191	710.009766	377.856445	4.65234327	4.69628859
03/04/03	16:44:00	585.394714	262.987396	3.8849268	9.36279106	106.889542	70.6567383	0.09399503	69.1796875	-0.0067153	13687.8662	13885.6191	710.009766	365.771484	4.65234327	4.69628859
03/04/03	16:45:00	585.394714	262.987396	3.8849268	10.4003887	106.889542	70.6567383	0.09399503	71.4624023	-0.0067153	13687.8662	13885.6191	710.009766	368.701172	4.65234327	4.69628859
03/04/03	16:46:00	585.394714	262.987396	3.8849268	9.39330864	106.889542	73.0737305	0.09399503	73.7786865	-0.0067153	13687.8662	13885.6191	710.009766	364.672852	4.65234327	4.69628859
03/04/03	16:47:00	585.394714	262.987396	3.8849268	8.38622952	106.889542	78.1091309	0.09399503	78.5455322	-0.0067153	13687.8662	13885.6191	710.009766	380.786133	4.65234327	4.69628859
03/04/03	16:48:00	585.394714	262.987396	3.8849268	7.13500881	106.889542	73.8458176	0.09399503	78.2098389	-0.0067153	13687.8662	13885.6191	710.009766	380.786133	4.65234327	4.69628859
03/04/03	16:49:00	585.394714	262.987396	3.8849268	5.02929735	106.889542	75.1550293	0.09399503	74.9200439	-0.0067153	13687.8662	13885.6191	710.009766	380.786133	4.65234327	4.69628859
03/04/03	16:50:00	585.394714	262.987396	3.8849268	7.07397509	106.889542	74.0136719	0.09399503	73.7115479	-0.0067153	13687.8662	13885.6191	710.009766	380.786133	4.65234327	4.69628859
03/04/03	16:51:00	585.394714	262.987396	3.86798286	7.07397509	106.889542	71.3952637	0.09399503	73.3087082	-0.0067153	13687.8662	13885.6191	710.009766	380.786133	4.65234327	4.69628859
03/04/03	16:52:00	585.394714	262.987396	3.8623879	7.07397509	106.889542	76.3635178	0.09399503	77.2027512	-0.0067153	13687.8662	13885.6191	710.009766	380.786133	4.65234327	4.69628859
03/04/03	16:53:00	585.394714	262.987396	3.8623879	7.07397509	106.889542	78.4112549	0.09399503	77.3706055	0.02685483	13687.8662	13885.6191	710.009766	382.617157	4.65234327	4.69628859
03/04/03	16:54:00	585.394714	262.987396	3.8623879	8.08105469	106.889542	77.7734299	0.09399503	77.9077148	0.02685483	13687.8662	13885.6191	710.009766	378.588837	4.65234327	4.69628859
03/04/03	16:55:00	585.394714	262.987396	3.8623879	8.08105469	106.889542	76.2963867	0.09399503	75.5914307	0.02685483	13687.8662	13885.6191	710.009766	365.039063	4.65234327	4.69628859
03/04/03	16:56:00	585.394714	262.987396	3.86679173	8.08105469	106.889542	72.8387451	0.09399503	73.2080078	0.02685483	13687.8662	13885.6191	710.009766	365.039063	4.65234327	4.69628859
03/04/03	16:57:00	585.394714	262.987396	3.87094879	8.08105469	106.889542	73.2080078	0.09399503	73.4429932	0.02685483	13687.8662	13885.6191	710.009766	378.588837	4.65234327	4.69628859
03/04/03	16:58:00	585.394714	262.987396	3.87094879	9.39330864	106.889542	74.4164963	0.09399503	72.7716064	0.02685483	13687.8662	13885.6191	710.009766	378.588837	4.65234327	4.69628859
03/04/03	16:59:00	585.394714	262.987396	3.85329485	10.4309072	106.889542	74.9200439	0.09399503	75.6921387	0.02685483	13687.8662	13885.6191	710.009766	378.588837	4.65234327	4.69628859
03/04/03	17:00:00	585.394714	262.987396	4.10897064	10.4309072	106.889542	78.1427002	0.09399503	78.9147873	0.02685483	13687.8662	13885.6191	710.009766	378.588837	4.65234327	4.69628859

		MAII006C	RMTT500	ADFI001	ADLT001	TSTMFLO	BAFI002	REAI001	BAAI052	BATE055	BATI020		AEFY136
		Generator	Ambient	Cond Xfer	Condenser	Total Stm	Total Air	CEMS	Boiler CO	SCR	AH Air		Fisher FW
		Arm Current	Temp	Flow	Hotwell	Flow	Flow	CO2		Outlet	Outlet		Valve
		Phase C		Calculated	Level					Temp.	Temp.		Demand
DATE	TIME	KA	DEG F	KPPH	IN	KPPH	KPPH	%	PPM	DEG F	DEG F		%
03/04/03	16:14:00	4.9453125	87.2680664	112.377861	47.9736328	1443.84985	2037.20361	11.5893555	0	632.355469	545.385925	0	40.9325409
03/04/03	16:15:00	4.9453125	87.2680664	115.034912	47.9736328	1443.84985	2037.20361	11.3879385	0	632.355469	545.385925	0	42.0663719
03/04/03	16:16:00	4.9453125	87.2680664	117.981674	47.9736328	1443.84985	2037.20361	11.3879385	0	632.355469	545.385925	0	42.0663719
03/04/03	16:17:00	4.9453125	87.2680664	117.981674	47.9736328	1443.84985	2037.20361	11.3879385	0	632.355469	545.385925	0	42.0663719
03/04/03	16:18:00	4.9453125	87.2680664	130.998627	47.9736328	1443.84985	2037.20361	11.583252	0	632.355469	545.385925	0	43.0774765
03/04/03	16:19:00	4.9453125	87.2680664	137.244522	47.9736328	1443.84985	2037.20361	11.4916983	0	632.355469	545.385925	0	42.0212517
03/04/03	16:20:00	4.9453125	87.2680664	135.025223	47.9736328	1443.84985	2037.20361	11.2780762	0	632.355469	545.385925	0	40.978569
03/04/03	16:21:00	4.9453125	87.2680664	136.843689	47.4902344	1443.84985	2037.20361	11.4794922	0	632.355469	545.385925	0	42.1190872
03/04/03	16:22:00	4.9453125	87.2680664	140.605453	47.4902344	1443.84985	2037.20361	11.4794922	0	632.355469	545.385925	0	42.1180992
03/04/03	16:23:00	4.9453125	87.2680664	140.116272	47.4902344	1443.84985	2037.20361	11.4794922	0	632.355469	545.385925	0	42.0945969
03/04/03	16:24:00	4.9453125	87.2680664	144.26918	47.4902344	1443.84985	2002.24878	11.4794922	0	632.355469	545.385925	0	42.3183403
03/04/03	16:25:00	4.9453125	87.2680664	141.772659	47.4902344	1443.84985	2036.9519	11.6870117	0	632.355469	545.385925	0	41.3110352
03/04/03	16:26:00	4.9453125	87.2680664	136.542297	47.4902344	1443.84985	2036.9519	11.4855957	0	632.355469	545.385925	0	41.3020897
03/04/03	16:27:00	4.9453125	87.2680664	139.625366	47.4902344	1443.84985	2036.9519	11.4916983	0	632.355469	545.385925	0	41.2808189
03/04/03	16:28:00	4.9453125	87.2680664	138.93515	47.4902344	1443.84985	2036.9519	11.4916983	0	632.355469	545.385925	0	42.4760208
03/04/03	16:29:00	4.9453125	87.2680664	134.719742	47.4902344	1443.84985	2036.9519	11.4855957	0	632.355469	545.385925	0	42.2604141
03/04/03	16:30:00	4.9453125	87.2680664	136.240234	47.4902344	1443.84985	2036.9519	11.4855957	0	632.355469	545.385925	0	42.2604141
03/04/03	16:31:00	4.9453125	87.2680664	148.675797	47.4902344	1443.84985	2036.9519	11.4855957	0	632.355469	545.385925	0	42.2328415
03/04/03	16:32:00	4.9453125	87.2680664	144.364349	47.4902344	1443.84985	2036.9519	11.4855957	0	632.355469	545.385925	0	42.2250328
03/04/03	16:33:00	4.9453125	87.2680664	147.190491	47.4902344	1443.84985	2036.9519	11.4855957	0	632.355469	545.385925	0	42.2250328
03/04/03	16:34:00	4.9453125	87.2680664	145.784256	47.4902344	1443.84985	2036.9519	11.4855957	0	632.355469	545.385925	0	41.2129478
03/04/03	16:35:00	4.9453125	87.2680664	149.780106	47.0068359	1443.84985	2036.9519	11.4855957	0	632.355469	545.385925	0	42.3149185
03/04/03	16:36:00	4.9453125	87.2680664	148.027817	47.0068359	1443.84985	2036.9519	11.2841797	0	632.355469	545.385925	0	43.2452278
03/04/03	16:37:00	4.9453125	87.2680664	151.512146	47.0068359	1443.84985	2036.9519	11.5161133	0	632.355469	545.385925	0	42.1794205
03/04/03	16:38:00	4.9453125	87.2680664	144.554474	47.0068359	1443.84985	2002.49072	11.3696289	0	632.355469	545.385925	0	42.1794205
03/04/03	16:39:00	4.9453125	87.2680664	158.684143	47.0068359	1443.84985	2038.23035	11.3696289	0	632.355469	545.385925	0	42.1794205
03/04/03	16:40:00	4.9453125	87.2680664	155.978271	47.0068359	1448.92542	2038.23035	11.3696289	0	632.355469	545.385925	0	42.1794205
03/04/03	16:41:00	4.9453125	87.2680664	151.964676	47.0068359	1448.92542	1994.18787	11.5893555	0	632.355469	545.385925	0	42.4097366
03/04/03	16:42:00	4.9453125	87.2680664	154.118271	47.0068359	1448.92542	2028.77246	11.3879385	0	632.355469	545.385925	0	42.4097366
03/04/03	16:43:00	4.9453125	87.2680664	156.154266	47.0068359	1448.92542	2028.77246	11.3879385	0	632.355469	545.385925	0	42.1852646
03/04/03	16:44:00	4.9453125	87.2680664	159.288818	47.0068359	1448.92542	2028.77246	11.595458	0	632.355469	545.385925	0	42.1955261
03/04/03	16:45:00	4.9453125	87.2680664	160.576813	47.0068359	1448.92542	2028.77246	11.3879385	0	632.355469	545.385925	0	42.1829948
03/04/03	16:46:00	4.9453125	87.2680664	152.865692	47.0068359	1448.92542	2028.77246	11.3879385	0	632.355469	545.385925	0	42.1829948
03/04/03	16:47:00	4.9453125	87.2680664	154.829483	47.0068359	1448.92542	2028.77246	11.3879385	0	632.355469	545.385925	0	42.1829948
03/04/03	16:48:00	4.9453125	87.2680664	152.415848	47.0068359	1448.92542	2028.77246	11.3879385	0	632.355469	545.385925	0	42.1829948
03/04/03	16:49:00	4.9453125	87.2680664	151.149155	47.0068359	1448.92542	2028.77246	11.3879385	0	632.355469	545.385925	0	42.1937637
03/04/03	16:50:00	4.9453125	87.2680664	147.097153	47.0068359	1448.92542	2028.77246	11.3879385	0	632.355469	545.385925	0	42.1890793
03/04/03	16:51:00	4.9453125	87.2680664	153.314224	47.0068359	1448.92542	2028.77246	11.5893555	0	632.355469	545.385925	0	42.1890793
03/04/03	16:52:00	4.9453125	87.2680664	159.116287	47.0068359	1448.92542	2028.77246	11.3879385	0	632.355469	545.385925	0	40.9389267
03/04/03	16:53:00	4.9453125	87.2680664	156.242188	47.0068359	1448.92542	2028.77246	11.3879385	0	632.355469	545.385925	0	40.9107971
03/04/03	16:54:00	4.9453125	87.2680664	154.118271	47.0068359	1448.92542	1993.51526	11.3879385	0	632.355469	545.385925	0	40.9845886
03/04/03	16:55:00	4.9453125	87.2680664	155.625702	47.0068359	1448.92542	2028.73828	11.5893555	0	632.355469	545.385925	0	42.0845108
03/04/03	16:56:00	4.9453125	87.2680664	149.6884	47.0068359	1448.92542	2031.04395	11.3879385	0	632.355469	545.385925	0	42.1002693
03/04/03	16:57:00	4.9453125	87.2680664	144.07869	47.0068359	1448.92542	2030.56531	11.3879385	0	632.355469	545.385925	0	42.1002693
03/04/03	16:58:00	4.9453125	87.2680664	143.218277	47.0068359	1448.92542	1992.9231	11.3879385	0	632.355469	545.385925	0	42.1002693
03/04/03	16:59:00	4.9453125	87.2680664	144.26918	47.0068359	1448.92542	1995.64221	11.3879385	0	632.355469	545.385925	0	41.0703354
03/04/03	17:00:00	4.9453125	87.2680664	138.93515	47.4902344	1448.92542	2035.45911	11.3879385	0	632.355469	545.385925	0	41.0348206

DATE	TIME	MAJI007 Generator Megawatts MW	MAJI008 Generator Megavars MVAR	NAJT101 13.8 kv NAA01 Gen Aux Load MW	NAJT201 13.8 kv NAA02 Gen Aux Load MW	AEFI135 FW Flow Comp. KPPH	AEFI131 SH Spray Flow KPPH	FDFI002 Sootblower Steam Flow KPPH	FDFI022 SCR Sootblower Stm Flow KPPH	AAFY018A Cont. Blowdown Flow PCT	FBFI021 MS to Aux Stm. Flow KPPH	AETE137 Feedwater Temp. DEG F	AAPTOO6 Selected Drum Pressure PSIG	FDPT002 Sootblower Steam Pressure PSIG	FDTT002 Sootblower Steam Temp. DEG F	FDPT022 A.H. Sootblower Stm. Press PSIG
03/06/03	10:00:00	200.927719	19.5251408	14.4085693	7.83508301	1512.24512	24.9626179	0	1.95849788	0	0	428.381531	2476.74561	319.763184	659.851074	380.493164
03/06/03	10:01:00	200.927719	19.5251408	14.4085693	7.83508301	1512.24512	24.9626179	0	1.95849788	0	0	428.381531	2476.74561	319.763184	659.851074	380.493164
03/06/03	10:02:00	200.927719	19.5251408	14.4085693	7.83508301	1512.24512	24.9626179	0	1.95849788	0	0	428.381531	2476.74561	319.763184	659.851074	380.493164
03/06/03	10:03:00	200.927719	19.5251408	14.4085693	7.83508301	1512.24512	24.9626179	0	1.95849788	0	0	428.381531	2476.74561	319.763184	659.851074	380.493164
03/06/03	10:04:00	200.927719	19.5251408	14.765625	7.52380371	1512.24512	24.9626179	0	1.95849788	0	0	428.381531	2476.74561	319.763184	659.851074	380.493164
03/06/03	10:05:00	200.927719	19.5251408	14.765625	7.52380371	1512.24512	24.9626179	0	1.95849788	0	0	428.381531	2476.74561	319.763184	659.851074	380.493164
03/06/03	10:06:00	200.927719	19.5251408	14.765625	7.52380371	1480.18542	24.9626179	0	1.95849788	0	0	428.381531	2476.74561	319.763184	659.851074	380.493164
03/06/03	10:07:00	200.927719	19.5251408	14.765625	7.56957912	1480.18542	24.9626179	0	1.95849788	0	0	428.381531	2476.74561	319.763184	659.851074	380.493164
03/06/03	10:08:00	200.927719	19.5251408	14.765625	7.89001417	1419.14722	43.4307899	0	1.95849788	0	0	428.381531	2476.74561	319.763184	659.851074	380.493164
03/06/03	10:09:00	200.927719	19.5251408	14.765625	7.89001417	1419.14722	38.2779465	0	1.95849788	0	0	428.381531	2476.74561	319.763184	659.851074	380.493164
03/06/03	10:10:00	200.927719	19.5251408	14.765625	7.89001417	1419.14722	24.1045189	0	1.95849788	0	0	428.381531	2476.74561	319.763184	659.851074	380.493164
03/06/03	10:11:00	200.927719	19.5251408	14.765625	7.54211473	1450.87158	24.1045189	0	1.95849788	0	0	428.381531	2476.74561	319.763184	659.851074	380.493164
03/06/03	10:12:00	200.927719	19.5251408	14.765625	7.54211473	1450.87158	24.1045189	0	1.95849788	0	0	428.381531	2476.74561	319.763184	659.851074	380.493164
03/06/03	10:13:00	200.927719	19.5251408	14.765625	7.89001417	1450.87158	38.2779465	0	1.95849788	0	0	428.381531	2476.74561	319.763184	659.851074	380.493164
03/06/03	10:14:00	200.927719	19.5251408	14.765625	7.7435298	1450.87158	32.3135376	0	1.95849788	0	0	428.381531	2476.74561	319.763184	659.851074	380.493164
03/06/03	10:15:00	200.927719	12.4755831	14.765625	8.05480957	1450.87158	23.2147236	0	1.95849788	0	0	428.381531	2476.74561	319.763184	659.851074	380.493164
03/06/03	10:16:00	200.927719	12.4755831	14.765625	8.05480957	1483.48853	23.2147236	0	1.95849788	0	0	428.381531	2476.74561	319.763184	659.851074	380.493164
03/06/03	10:17:00	200.927719	12.4755831	14.765625	8.05480957	1483.48853	23.2147236	0	1.95849788	0	0	428.381531	2476.74561	319.763184	659.851074	380.493164
03/06/03	10:18:00	200.927719	12.4755831	14.765625	7.72521877	1483.48853	23.2147236	0	1.95849788	0	0	428.381531	2476.74561	319.763184	659.851074	380.493164
03/06/03	10:19:00	200.927719	12.4755831	14.765625	7.72521877	1483.48853	23.2147236	0	1.95849788	0	0	428.381531	2476.74561	319.763184	659.851074	380.493164
03/06/03	10:20:00	200.927719	12.4755831	14.765625	7.72521877	1483.48853	23.2147236	0	1.95849788	0	0	428.381531	2476.74561	319.763184	659.851074	380.493164
03/06/03	10:21:00	200.927719	12.4755831	14.4543457	7.37731934	1483.48853	23.2147236	0	1.95849788	0	0	428.381531	2476.74561	319.763184	659.851074	380.493164
03/06/03	10:22:00	200.927719	12.4755831	14.4543457	7.82592773	1483.48853	23.2147236	0	1.95849788	0	0	428.381531	2476.74561	319.763184	659.851074	380.493164
03/06/03	10:23:00	200.927719	12.4755831	14.4543457	7.82592773	1483.48853	23.2147236	0	1.95849788	0	0	428.381531	2476.74561	319.763184	659.851074	380.493164
03/06/03	10:24:00	200.927719	12.4755831	14.4543457	7.82592773	1483.48853	23.2147236	0	1.95849788	0	0	428.381531	2476.74561	319.763184	659.851074	380.493164
03/06/03	10:25:00	200.927719	12.4755831	14.4543457	7.82592773	1483.48853	23.2147236	0	1.95849788	0	0	428.381531	2476.74561	319.763184	659.851074	380.493164
03/06/03	10:26:00	200.927719	12.4755831	14.4543457	7.51464796	1483.48853	23.2147236	0	1.95849788	0	0	428.381531	2476.74561	319.763184	659.851074	380.493164
03/06/03	10:27:00	200.927719	12.4755831	14.4543457	7.51464796	1451.90442	39.8937416	0	1.95849788	0	0	428.381531	2476.74561	319.763184	659.851074	380.493164
03/06/03	10:28:00	200.927719	12.4755831	14.4543457	7.46887255	1482.54492	22.2894325	0	1.95849788	0	0	428.381531	2476.74561	319.763184	659.851074	380.493164
03/06/03	10:29:00	200.927719	12.4755831	14.4543457	8.08227539	1451.23242	22.2894325	0	1.95849788	0	0	428.381531	2476.74561	319.763184	659.851074	380.493164
03/06/03	10:30:00	200.927719	12.4755831	14.4543457	8.08227539	1481.25342	22.2894325	0	1.95849788	0	0	428.381531	2476.74561	319.763184	659.851074	380.493164
03/06/03	10:31:00	200.927719	12.4755831	14.4543457	8.08227539	1481.25342	22.2894325	0	1.95849788	0	0	428.381531	2476.74561	319.763184	659.851074	380.493164
03/06/03	10:32:00	200.927719	12.4755831	14.4543457	7.76184082	1481.25342	22.2894325	0	1.95849788	0	0	428.381531	2476.74561	319.763184	659.851074	380.493164
03/06/03	10:33:00	200.927719	12.4755831	14.4543457	7.76184082	1479.96875	40.9355507	0	1.95849788	0	0	428.381531	2476.74561	319.763184	659.851074	380.493164
03/06/03	10:34:00	200.927719	12.4755831	14.4543457	7.76184082	1479.96875	23.2147236	0	1.95849788	0	0	428.381531	2476.74561	319.763184	659.851074	380.493164
03/06/03	10:35:00	200.927719	12.4755831	14.4543457	7.45056152	1479.96875	23.2147236	0	1.95849788	0	0	428.381531	2476.74561	319.763184	659.851074	380.493164
03/06/03	10:36:00	200.927719	12.4755831	14.4543457	8.10974026	1479.96875	23.2147236	0	1.95849788	0	0	428.381531	2476.74561	319.763184	659.851074	380.493164
03/06/03	10:37:00	200.927719	12.4755831	14.4543457	8.10974026	1479.96875	38.2779465	0	1.95849788	0	0	428.381531	2476.74561	319.763184	659.851074	380.493164
03/06/03	10:38:00	200.927719	12.4755831	14.4543457	8.10974026	1448.92432	42.4503098	0	1.95849788	0	0	428.381531	2476.74561	319.763184	659.851074	380.493164
03/06/03	10:39:00	200.927719	4.57151222	14.4543457	7.79846096	1448.92432	23.2147236	0	1.95849788	0	0	428.381531	2476.74561	319.763184	659.851074	380.493164
03/06/03	10:40:00	200.927719	4.57151222	14.4543457	7.42309523	1448.92432	23.2147236	0	1.95849788	0	0	428.381531	2476.74561	319.763184	659.851074	380.493164
03/06/03	10:41:00	200.927719	4.57151222	14.4543457	7.42309523	1448.92432	41.9514542	0	1.95849788	0	0	428.381531	2476.74561	319.763184	659.851074	380.493164
03/06/03	10:42:00	200.927719	4.57151222	14.4543457	7.72521877	1448.92432	55.3636551	0	1.95849788	0	0	428.381531	2476.74561	319.763184	659.851074	380.493164
03/06/03	10:43:00	200.927719	4.57151222	14.4543457	8.05480957	1416.1217	36.0109329	0	1.95849788	0	0	428.381531	2476.74561	319.763184	659.851074	380.493164
03/06/03	10:44:00	200.927719	4.57151222	14.4543457	7.75268555	1416.1217	24.1045189	0	1.95849788	0	0	428.381531	2476.74561	319.763184	659.851074	380.493164
03/06/03	10:45:00	200.927719	4.57151222	14.4543457	7.75268555	1446.63208	41.9514542	0	1.95849788	0	0	428.381531	2476.74561	319.763184	659.851074	380.493164
03/06/03	10:46:00	200.927719	4.57151222	14.4543457	7.75268555	1446.63208	58.6861687	0	1.95849788	0	0	428.381531	2476.74561	319.763184	669.921875	380.493164
03/06/03	10:47:00	200.927719	4.57151222	14.4543457	7.75268555	1477.09692	28.8729362	0	1.95849788	0	0	428.381531	2476.74561	319.763184	669.921875	380.493164
03/06/03	10:48:00	200.927719	4.57151222	14.4543457	7.75268555	1477.09692	24.1045189	0	1.95849788	0	0	428.381531	2476.74561	319.763184	669.921875	380.493164
03/06/03	10:49:00	200.927719	11.8346987	14.4543457	7.75268555	1446.64551	24.1045189	0	1.95849788	0	0	428.381531	2476.74561	319.763184	669.921875	380.493164
03/06/03	10:50:00	200.927719	11.8346987	14.4543457	7.75268555	1477.44043	44.3896675	0	1.95849788	0	0	428.381531	2476.74561	319.763184	669.921875	380.493164
03/06/03	10:51:00	200.927719	11.8346987	14.4543457	7.75268555	1444.97021	41.9514542	0	1.95849788	0	0	428.381531	2476.74561	319.763184	669.921875	380.493164
03/06/03	10:52:00	200.927719	11.8346987	14.4543457	7.75268555	1444.97021	22.2894325	0	1.95849788	0	0	428.381531	2476.74561	319.763184	669.921875	380.493164
03/06/03	10:53:00	200.927719	11.8346987	14.4543457	7.75268555	1444.97021	22.2894325	0	1.95849788	0	0	428.381531	2476.74561	319.763184	669.921875	380.493164
03/06/03	10:54:00	200.927719	11.8346987	14.4543457	7.75268555	1475.17517	43.4307899	0	1.95849788	0	0	428.381531	2476.74561	319.763184	669.921875	380.493164
03/06/03	10:55:00	200.927719	11.8346987	14.4543457	7.75268555	1475.17517	43.4307899	0	1.95849788	0	0	428.381531	2476.74561	319.763184	669.921875	380.493164
03/06/03	10:56:00	200.927719	11.8346987	14.4543457	7.75268555	1475.17517	22.2894325	0	1.95849788	0	0	428.381531	2476.74561	319.763184	669.921875	380.493164
03/06/03	10:57:00	200.927719	11.8346987	14.4543457	7.75268555	1475.17517	22.2894325	0	1.95849788	0	0	428.381531	2476.74561	319.763184	669.921875	380.493164
03/06/03	10:58:00	200.927719	11.8346987	14.4543457	7.75268555	1475.17517	40.9355507	0	1.95849788	0	0	428.381531	2476.74561	319.763184	669.921875	380.493164
03/06/03	10:59:00	200.927719	11.8346987	14.4543457	7.75268555	1475.17517	40.9355507	0	1.95849788	0	0	428.381531	2476.74561	319.763184	669.921875	380.493164
03/06/03	11:00:00	200.927719	11.8346987	14.4543457	7.75268555	1444.05554	23.2147236	0	1.95849788	0	0	428.381531	2476.74561	319.763184	669.921875	380.493164

DATE	TIME	FDTT022 SCR/AH Sootblower Stm Temp DEG F	ABPIOO7 Turbine Throttle Pressure PSIG	ABTE008 Main Stm Temp DEG F	AEFI111 Reheater Spray Flow KPPH	ABPI010 Cold Reheat Stm Press PSIG	ABTE016 Cold Reheat Temp DEG F	ABPT024 Hot Reheat Pressure PSIG	ABTE022 Hot Reheat Temp DEG F	AETE119 BFP Hdr Discharge Temp DEG F	AETE130 FW Htr #7 Outlet Temp DEG F	AETE035 FW Htr #7 Casc Drain Temp DEG F	AFPT026 Cold Reheat Ext Hdr Press PSIG	AFTE027 Cold Reheat Ext Hdr Temp DEG F	AFTI017 HP Aux Steam Temp DEG F	AFFI017 Spray Flow to HP Aux Steam KPPH
03/06/03	10:00:00	793.518066	2417.72437	979.30835	0	315.184723	542.545898	295.654266	914.547119	354.580658	422.606781	353.330078	314.575195	544.931641	386.128723	0
03/06/03	10:01:00	793.518066	2414.06226	976.131287	0	315.184723	542.545898	295.654266	912.99292	354.580658	422.606781	353.330078	314.575195	544.931641	386.128723	0
03/06/03	10:02:00	793.518066	2410.40039	976.131287	0	315.184723	542.545898	295.654266	912.99292	354.580658	422.606781	353.330078	314.575195	544.931641	386.128723	0
03/06/03	10:03:00	793.518066	2406.73828	976.131287	0	315.184723	542.545898	295.654266	912.99292	354.580658	422.606781	353.330078	314.575195	544.931641	386.128723	0
03/06/03	10:04:00	793.518066	2399.41382	977.809448	0	315.184723	542.545898	295.654266	912.99292	354.580658	422.606781	353.330078	314.575195	544.931641	386.128723	0
03/06/03	10:05:00	793.518066	2392.08984	977.809448	0	315.184723	542.545898	295.654266	912.99292	354.580658	422.606781	353.330078	314.575195	544.931641	386.128723	0
03/06/03	10:06:00	793.518066	2392.08984	979.431702	0	315.184723	542.545898	295.654266	914.636719	354.580658	422.606781	353.330078	314.575195	544.931641	386.128723	0
03/06/03	10:07:00	793.518066	2392.08984	982.665039	0	315.184723	542.545898	295.654266	916.25824	354.580658	422.606781	353.330078	314.575195	544.931641	386.128723	0
03/06/03	10:08:00	793.518066	2395.75195	985.90979	0	315.184723	542.545898	295.654266	917.890808	354.580658	422.606781	353.330078	314.575195	544.931641	386.128723	0
03/06/03	10:09:00	793.518066	2403.07593	982.631348	0	315.184723	542.545898	295.654266	919.501038	354.580658	422.606781	353.330078	314.575195	544.931641	386.128723	0
03/06/03	10:10:00	793.518066	2406.73828	974.45282	0	315.184723	542.545898	295.654266	919.501038	354.580658	422.606781	353.330078	314.575195	544.931641	386.128723	0
03/06/03	10:11:00	793.518066	2414.06226	979.341858	0	315.184723	542.545898	295.654266	921.100037	354.580658	422.606781	353.330078	314.575195	544.931641	386.128723	0
03/06/03	10:12:00	793.518066	2417.72437	982.597656	0	315.184723	542.545898	295.654266	921.100037	354.580658	422.606781	353.330078	314.575195	544.931641	386.128723	0
03/06/03	10:13:00	793.518066	2425.04883	985.864868	0	315.184723	542.545898	295.654266	921.100037	354.580658	422.606781	353.330078	314.575195	544.931641	386.128723	0
03/06/03	10:14:00	793.518066	2425.04883	980.952881	0	315.184723	542.545898	295.654266	921.100037	354.580658	422.606781	353.330078	314.575195	544.931641	386.128723	0
03/06/03	10:15:00	793.518066	2425.04883	974.419128	0	315.184723	542.545898	295.654266	919.456116	354.580658	422.606781	353.330078	314.575195	544.931641	386.128723	0
03/06/03	10:16:00	793.518066	2421.38672	977.697144	0	315.184723	542.545898	295.654266	919.456116	354.580658	422.606781	353.330078	314.575195	544.931641	386.128723	0
03/06/03	10:17:00	793.518066	2425.04883	980.975281	0	315.184723	542.545898	295.654266	919.456116	354.580658	422.606781	353.330078	314.575195	544.931641	386.128723	0
03/06/03	10:18:00	793.518066	2421.38672	980.975281	0	315.184723	542.545898	295.654266	917.823425	354.580658	422.606781	353.330078	314.575195	544.931641	386.128723	0
03/06/03	10:19:00	793.518066	2425.04883	980.975281	0	315.184723	542.545898	295.654266	917.823425	354.580658	422.606781	353.330078	314.575195	544.931641	386.128723	0
03/06/03	10:20:00	793.518066	2425.04883	982.597595	0	315.184723	542.545898	295.654266	917.823425	354.580658	422.606781	353.330078	314.575195	544.931641	386.128723	0
03/06/03	10:21:00	793.518066	2421.38672	980.95282	0	315.184723	542.545898	295.654266	916.179626	354.580658	422.606781	353.330078	314.575195	544.931641	386.128723	0
03/06/03	10:22:00	793.518066	2421.38672	982.575134	0	315.184723	542.545898	295.654266	916.179626	354.580658	422.606781	353.330078	314.575195	544.931641	386.128723	0
03/06/03	10:23:00	793.518066	2422.302	982.575134	0	315.184723	542.545898	295.654266	916.179626	354.580658	422.606781	353.330078	314.575195	544.931641	386.128723	0
03/06/03	10:24:00	803.588867	2418.64014	982.575134	0	315.184723	542.545898	295.654266	916.179626	354.580658	422.606781	353.330078	314.575195	544.931641	386.128723	0
03/06/03	10:25:00	803.588867	2418.64014	982.575134	0	315.184723	542.545898	295.654266	916.179626	354.580658	422.606781	353.330078	314.575195	544.931641	386.128723	0
03/06/03	10:26:00	803.588867	2422.302	984.197571	0	315.184723	542.545898	295.654266	916.179626	354.580658	422.606781	353.330078	314.575195	544.931641	386.128723	0
03/06/03	10:27:00	803.588867	2422.302	984.197571	0	315.184723	542.545898	295.654266	916.179626	354.580658	422.606781	353.330078	314.575195	544.931641	386.128723	0
03/06/03	10:28:00	803.588867	2422.302	974.385376	0	315.184723	542.545898	295.654266	916.179626	354.580658	422.606781	353.330078	314.575195	544.931641	386.128723	0
03/06/03	10:29:00	803.588867	2422.302	977.618469	0	315.184723	542.545898	295.654266	917.767273	354.580658	422.606781	353.330078	314.575195	544.931641	386.128723	0
03/06/03	10:30:00	803.588867	2422.302	980.896667	0	315.184723	542.545898	295.654266	917.767273	354.580658	422.606781	353.330078	314.575195	544.931641	386.128723	0
03/06/03	10:31:00	803.588867	2418.64014	982.530212	0	315.184723	542.545898	295.654266	917.767273	354.580658	422.606781	353.330078	314.575195	544.931641	386.128723	0
03/06/03	10:32:00	803.588867	2407.65356	984.152649	0	315.184723	542.545898	295.654266	917.767273	354.580658	422.606781	353.330078	314.575195	544.931641	386.128723	0
03/06/03	10:33:00	803.588867	2411.31592	985.774963	0	315.184723	542.545898	295.654266	917.767273	354.580658	422.606781	353.330078	314.575195	544.931641	386.128723	0
03/06/03	10:34:00	803.588867	2407.65356	977.596008	0	315.184723	542.545898	295.654266	917.767273	354.580658	422.606781	353.330078	314.575195	544.931641	386.128723	0
03/06/03	10:35:00	803.588867	2400.32959	975.973877	0	315.184723	542.545898	295.654266	917.767273	354.580658	422.606781	353.330078	314.575195	544.931641	386.128723	0
03/06/03	10:36:00	803.588867	2400.32959	982.485352	0	315.184723	542.545898	295.654266	917.767273	354.580658	422.606781	353.330078	314.575195	544.931641	386.128723	0
03/06/03	10:37:00	803.588867	2396.66748	985.752563	0	315.184723	542.545898	295.654266	917.767273	354.580658	422.606781	353.330078	314.575195	544.931641	386.128723	0
03/06/03	10:38:00	803.588867	2396.66748	985.752563	0	315.184723	542.545898	295.654266	919.343872	354.580658	422.606781	353.330078	314.575195	544.931641	386.128723	0
03/06/03	10:39:00	803.588867	2393.00513	975.940308	0	315.184723	542.545898	295.654266	919.343872	354.580658	422.606781	353.330078	314.575195	544.931641	386.128723	0
03/06/03	10:40:00	803.588867	2396.66748	980.829346	0	315.184723	542.545898	295.654266	919.343872	354.580658	422.606781	353.330078	314.575195	544.931641	386.128723	0
03/06/03	10:41:00	803.588867	2400.32959	987.352539	0	315.184723	542.545898	295.654266	919.343872	354.580658	422.606781	353.330078	314.575195	544.931641	386.128723	0
03/06/03	10:42:00	803.588867	2400.32959	988.975037	0	315.184723	542.545898	295.654266	920.942871	354.580658	422.606781	353.330078	314.575195	544.931641	386.128723	0
03/06/03	10:43:00	803.588867	2403.9917	979.184631	0	315.184723	542.545898	295.654266	920.942871	354.580658	422.606781	353.330078	314.575195	544.931641	386.128723	0
03/06/03	10:44:00	803.588867	2407.65356	977.528687	0	315.184723	542.545898	295.654266	920.942871	354.580658	422.606781	353.330078	314.575195	544.931641	386.128723	0
03/06/03	10:45:00	803.588867	2407.65356	987.318848	0	315.184723	542.545898	295.654266	920.942871	354.580658	422.606781	353.330078	314.575195	544.931641	386.128723	0
03/06/03	10:46:00	803.588867	2411.31592	990.597595	0	315.184723	542.545898	295.654266	920.942871	354.580658	422.606781	353.330078	314.575195	544.931641	386.128723	0
03/06/03	10:47:00	803.588867	2411.31592	979.128479	0	315.184723	542.545898	295.654266	919.26532	354.580658	422.606781	353.330078	314.575195	544.931641	386.128723	0
03/06/03	10:48:00	803.588867	2411.31592	975.861694	0	315.184723	542.545898	295.654266	917.62146	354.580658	422.606781	353.330078	314.575195	544.931641	386.128723	0
03/06/03	10:49:00	803.588867	2407.65356	985.640259	0	315.184723	542.545898	295.654266	917.62146	354.580658	422.606781	353.330078	314.575195	544.931641	386.128723	0
03/06/03	10:50:00	803.588867	2411.31592	990.541443	0	315.184723	542.545898	295.654266	915.977661	354.580658	422.606781	353.330078	314.575195	544.931641	386.128723	0
03/06/03	10:51:00	803.588867	2414.97803	983.995483	0	315.184723	542.545898	295.654266	915.977661	354.580658	422.606781	353.330078	314.575195	544.931641	386.128723	0
03/06/03	10:52:00	803.588867	2414.97803	977.450073	0	315.184723	542.545898	295.654266	915.977661	354.580658	422.606781	353.330078	314.575195	544.931641	386.128723	0
03/06/03	10:53:00	803.588867	2414.97803	982.316895	0	315.184723	542.545898	295.654266	914.277588	354.580658	422.606781	353.330078	314.575195	544.931641	386.128723	0
03/06/03	10:54:00	803.588867	2418.64014	988.873962	0	315.184723	542.545898	295.654266	914.277588	354.580658	422.606781	353.330078	314.575195	544.931641	386.128723	0
03/06/03	10:55:00	803.588867	2414.97803	985.651489	0	315.184723	542.545898	295.654266	914.277588	354.580658	422.606781	353.330078	314.575195	544.931641	386.128723	0
03/06/03	10:56:00	803.588867	2414.97803	977.573608	0	315.184723	542.545898	295.654266	914.277588	354.580658	422.606781	353.330078	314.575195	544.931641	386.128723	0
03/06/03	10:57:00	803.588867	2414.97803	982.586426	0	315.184723	542.545898	295.654266	914.277588	354.580658	422.606781	353.330078	314.575195	544.931641	386.128723	0
03/06/03	10:58:00	803.588867	2418.64014	987.565979	0	315.184723	542.545898	295.654266	914.277588	354.580658	422.606781	353.330078	314.575195	544.931641	386.128723	0
03/06/03	10:59:00	803.588867	2418.64014	987.64447	0	315.184723	542.545898	295.654266	915.792419	354.580658	422.606781	353.330078	314.575195	544.931641	386.128723	0
03/06/03	11:00:00	803.588867	2414.06226	979.532654	0	315.184723	542.545898	295.654266	915.792419	354.580658	422.606781	353.330078	314.575195	544.931641	386.128723	0

DATE	TIME	AETE055 BFBP Discharge Hdr Temp DEG F	AFPY044A DA Pegging Stm Valve PCT	ASFI006 Caulkins LP Stm Flow Output KPPH	ASFI016 Caulkins HP Stm Flow Output KPPH	MAJI002 Unit Megavars MVAR	MAJI004 Unit Megawatts MW	ADPT003C Absolute Cond Vac Calculated IN HGA	DALT004A Cooling Twr Basin Level IN	DAFI027 Cooling Twr Blow-Down Flow GPM	EAFI034 Cooling Twr Blow-Down SDA GPM	DATE014A Water Box Inlet A Temp DEG F	DATE014B Water Box Inlet B Temp DEG F	DATE016A Water Box Outlet A Temp DEG F	DATE016B Water Box Outlet B Temp DEG F	ABFI018 Main Steam Flow KPPH
03/06/03	10:00:00	244.65509	0	90.6808395	16.0239048	8.36182785	207.03125	2.06237793	59.1650391	0	260.133148	81.6967239	81.7183762	94.9475403	94.7724609	1360.83435
03/06/03	10:01:00	244.65509	0	94.8838806	15.6175575	8.36182785	207.03125	2.06237793	59.1650391	0	260.133148	81.7114334	81.7183762	94.9475403	94.7724609	1360.83435
03/06/03	10:02:00	244.65509	0	94.8838806	15.6346445	8.36182785	207.03125	2.06237793	59.1650391	0	260.133148	81.7114334	81.7183762	94.9475403	94.7724609	1360.83435
03/06/03	10:03:00	244.65509	0	90.4385605	15.8074865	8.36182785	207.03125	2.06237793	59.1650391	0	263.369019	80.4007874	81.7183762	94.9475403	94.7724609	1360.83435
03/06/03	10:04:00	244.65509	0	90.4385605	15.8074865	8.36182785	207.03125	2.06237793	59.1650391	0	263.369019	81.8143311	81.7183762	94.9475403	94.7724609	1360.83435
03/06/03	10:05:00	244.65509	0	90.4385605	15.7436399	8.36182785	207.03125	2.06237793	59.1650391	0	256.91748	81.8142929	81.7183762	94.9475403	94.7724609	1360.83435
03/06/03	10:06:00	244.65509	0	92.5190735	15.9072495	8.36182785	201.99585	2.06237793	59.1650391	0	247.018295	81.8142929	81.7183762	94.9475403	94.7724609	1360.83435
03/06/03	10:07:00	244.65509	0	94.6314926	15.8215199	8.36182785	201.99585	2.06237793	59.1650391	0	247.018295	81.7700882	81.7183762	94.9475403	94.7724609	1360.83435
03/06/03	10:08:00	244.65509	0	94.6314926	15.8215199	8.36182785	201.99585	2.06237793	59.1650391	0	250.236328	81.7700882	81.7183762	94.9475403	94.7724609	1360.83435
03/06/03	10:09:00	244.65509	0	90.1697922	15.9252176	8.36182785	201.99585	2.06237793	59.1650391	0	253.537125	81.7406158	81.7183762	94.9475403	94.7724609	1360.83435
03/06/03	10:10:00	244.65509	0	90.1697922	15.8854084	8.36182785	201.99585	2.06237793	59.1650391	0	263.309448	81.7406158	81.7183762	94.9475403	94.7724609	1360.83435
03/06/03	10:11:00	244.65509	0	90.1697922	15.7765741	8.36182785	207.03125	2.06237793	59.1650391	0	266.683075	81.7406158	81.7183762	94.9475403	94.7724609	1360.83435
03/06/03	10:12:00	244.65509	0	90.1697922	15.7765741	8.36182785	207.03125	2.06237793	59.1650391	0	269.898224	81.7406158	81.7183762	94.9475403	94.7724609	1360.83435
03/06/03	10:13:00	244.65509	0	90.1697922	15.7765741	8.36182785	207.03125	2.06237793	59.1650391	0	266.624237	81.7406158	81.7183762	94.9475403	94.7724609	1360.83435
03/06/03	10:14:00	244.65509	0	90.1697922	15.8631153	8.36182785	207.03125	2.06237793	59.1650391	0	260.072876	81.7406158	81.7183762	94.9475403	94.7724609	1360.83435
03/06/03	10:15:00	244.65509	0	92.3566666	16.2958164	8.36182785	207.03125	2.06237793	59.1650391	0	253.598984	81.7406158	81.7183762	94.9475403	94.7724609	1360.83435
03/06/03	10:16:00	244.65509	0	92.3566666	15.8088026	8.36182785	207.03125	2.06237793	59.1650391	0	243.693207	81.7406158	81.7183762	94.9475403	94.7724609	1360.83435
03/06/03	10:17:00	244.65509	0	92.3566666	15.8088026	8.36182785	207.03125	2.06237793	59.1650391	0	237.233459	81.7406158	81.7183762	94.9475403	94.7724609	1360.83435
03/06/03	10:18:00	244.65509	0	87.3547668	15.8088026	-2.0141532	207.03125	2.06237793	59.1650391	0	237.233459	81.7406158	81.7183762	94.9475403	94.7724609	1360.83435
03/06/03	10:19:00	244.65509	0	87.3547668	15.9359055	-2.0141532	207.03125	2.06237793	59.1650391	0	250.612198	81.7406158	81.7183762	94.9475403	94.7724609	1360.83435
03/06/03	10:20:00	244.65509	0	87.3547668	15.4863968	-2.0141532	207.03125	2.06237793	59.1650391	0	263.845001	81.7406158	81.7183762	94.9475403	94.7724609	1360.83435
03/06/03	10:21:00	244.65509	0	87.3547668	15.4863968	-2.0141532	207.03125	2.06237793	59.1650391	0	270.536621	81.7406158	81.7183762	94.9475403	95.0490723	1360.83435
03/06/03	10:22:00	244.65509	0	91.6486893	15.4613962	-2.0141532	207.03125	2.06237793	59.1650391	0	273.763641	81.7406158	81.7183762	94.9475403	95.0490265	1360.83435
03/06/03	10:23:00	244.65509	0	93.7428513	15.7562532	-2.0141532	207.03125	2.06237793	59.1650391	0	283.776428	81.7406158	81.7183762	94.9475403	95.0198975	1360.83435
03/06/03	10:24:00	244.65509	0	93.7428513	15.880929	-2.0141532	207.03125	2.06237793	59.1650391	0	290.223083	81.7406158	81.7183762	94.9475403	95.0198975	1360.83435
03/06/03	10:25:00	244.65509	0	88.9052124	15.8276491	-2.0141532	207.03125	2.06237793	59.1650391	0	300.207275	81.7406158	81.7183762	94.9475403	95.0198975	1360.83435
03/06/03	10:26:00	244.65509	0	88.9052124	15.8723059	-2.0141532	207.03125	2.06237793	59.1650391	0	306.818573	80.7759552	81.7183762	94.9475403	95.0198975	1360.83435
03/06/03	10:27:00	244.65509	0	88.9052124	15.8492184	-2.0141532	207.03125	2.06237793	59.1650391	0	313.289917	82.2037888	81.7183762	94.9475403	95.0198975	1360.83435
03/06/03	10:28:00	244.65509	0	88.9052124	15.8492184	-2.0141532	207.03125	2.06237793	59.1650391	0	316.62439	80.7612228	80.7612228	94.9475403	95.0198975	1360.83435
03/06/03	10:29:00	244.65509	0	93.5985336	15.9678316	-2.0141532	207.03125	2.06237793	59.1650391	0	323.189758	82.1743774	82.1743774	94.9475403	95.0198975	1360.83435
03/06/03	10:30:00	244.65509	0	93.5985336	15.9678316	-2.0141532	207.03125	2.06237793	59.1650391	0	badbad	82.1743774	82.1743774	94.9475403	95.0198975	1360.83435
03/06/03	10:31:00	244.65509	0	93.5985336	15.5634394	-2.0141532	207.03125	2.06237793	59.1650391	0	badbad	82.1743774	82.144928	94.9475403	95.0198975	1360.83435
03/06/03	10:32:00	244.65509	0	89.3288498	16.0489788	-2.0141532	207.03125	2.06237793	59.1650391	0	badbad	82.130188	82.130188	94.9475403	95.0198975	1360.83435
03/06/03	10:33:00	244.65509	0	87.0053329	16.0489788	-2.0141532	207.03125	2.06237793	59.1650391	0	badbad	82.1154633	82.130188	94.9475403	95.0198975	1360.83435
03/06/03	10:34:00	244.65509	0	87.0053329	15.8473358	-2.0141532	207.03125	2.06237793	59.1650391	0	badbad	82.1154633	82.130188	94.9475403	95.0198975	1360.83435
03/06/03	10:35:00	244.65509	0	87.0053329	15.8473358	-2.0141532	207.03125	2.06237793	59.1650391	0	badbad	82.1154633	80.6875	94.9475403	95.0198975	1360.83435
03/06/03	10:36:00	244.65509	0	98.1524963	15.8473358	-2.0141532	207.03125	2.06237793	59.1650391	0	badbad	82.1007843	82.1007843	94.9475403	95.0198975	1360.83435
03/06/03	10:37:00	244.65509	0	98.1524963	16.0294456	-2.0141532	201.99585	2.06237793	59.1650391	0	badbad	82.1007843	80.6581116	94.9475403	95.0198975	1360.83435
03/06/03	10:38:00	244.65509	0	92.6904526	16.1642151	-2.0141532	201.99585	2.06237793	59.1650391	0	badbad	80.6580505	80.6580505	94.9475403	95.0198975	1360.83435
03/06/03	10:39:00	244.65509	0	98.064064	16.1240253	-2.0141532	201.99585	2.06237793	59.1650391	0	badbad	82.071373	82.1007843	94.9475403	95.0198975	1360.83435
03/06/03	10:40:00	244.65509	0	102.584404	15.7106028	-2.0141532	201.99585	2.06237793	59.1650391	0	badbad	82.1007843	82.1007843	94.9475403	95.0198975	1360.83435
03/06/03	10:41:00	244.65509	0	104.60434	15.6526737	-2.0141532	201.99585	2.06237793	59.1650391	0	badbad	82.0861053	82.0861053	94.9475403	95.0198975	1360.83435
03/06/03	10:42:00	244.65509	0	109.217094	16.1431103	-2.0141532	201.99585	2.06237793	59.1650391	0	badbad	82.071373	82.0861053	94.9475403	95.0198975	1360.83435
03/06/03	10:43:00	244.65509	0	109.217094	16.1431103	-2.0141532	201.99585	2.06237793	59.1650391	0	badbad	82.0566406	82.071373	94.9475403	95.0198975	1360.83435
03/06/03	10:44:00	244.65509	0	111.222252	16.1431103	-2.0141532	201.99585	2.06237793	59.1650391	0	badbad	82.0419083	82.0566406	94.9475403	95.0198975	1360.83435
03/06/03	10:45:00	244.65509	0	111.222252	15.717495	-2.0141532	201.99585	2.06237793	59.1650391	0	badbad	82.0124893	82.0566406	94.9475403	95.0198975	1360.83435
03/06/03	10:46:00	244.65509	0	111.222252	15.717495	-2.0141532	201.99585	2.06237793	59.1650391	0	badbad	81.997757	81.997757	94.9475403	95.0198975	1360.83435
03/06/03	10:47:00	244.65509	0	109.134399	15.953248	-2.0141532	201.99585	2.06237793	59.1650391	0	badbad	81.997757	81.997757	94.9475403	95.0198975	1360.83435
03/06/03	10:48:00	244.65509	0	109.134399	15.9594231	-2.0141532	201.99585	2.06237793	59.1650391	0	badbad	81.997757	81.997757	94.9475403	95.0198975	1360.83435
03/06/03	10:49:00	244.65509	0	109.134399	15.5020647	-2.0141532	201.99585	2.06237793	59.1650391	0	badbad	81.997757	81.997757	94.9475403	95.0198975	1360.83435
03/06/03	10:50:00	244.65509	0	109.134399	15.924017	-2.0141532	201.99585	2.06237793	59.1650391	0	badbad	81.997757	81.9536057	94.9475403	95.0198975	1360.83435
03/06/03	10:51:00	244.65509	0	109.134399	15.9159117	-2.0141532	201.99585	2.06237793	59.6484337	0	badbad	81.997757	81.9241867	94.9475403	95.0198975	1360.83435
03/06/03	10:52:00	244.65509	0	109.134399	15.9159117	-2.0141532	201.99585	2.06237793	59.6484337	0	badbad	81.997757	81.9241867	94.9475403	95.0198975	1360.83435
03/06/03	10:53:00	244.65509	0	113.811958	15.6828175	-2.0141532	201.99585	2.06237793	59.6484337	0	badbad	80.4812775	81.9241867	94.9475403	95.0198975	1360.83435
03/06/03	10:54:00	244.65509	0	113.811958	15.633872	-2.0141532	201.99585	2.06237793	59.6484337	0	badbad	81.9389877	81.9241867	94.9475403	95.0198975	1360.83435
03/06/03	10:55:00	244.65509	0	113.811958	15.5623665	-2.0141532	201.99585	2.06237793	59.6484337	0	badbad	82.0126114	82.0126114	94.9475403	95.0198975	1360.83435
03/06/03	10:56:00	244.65509	0	113.811958	16.2409592	-2.0141532	201.99585	2.06237793	59.6484337	0	badbad	82.1746292	80.746727	94.9325714	95.0198975	1360.83435
03/06/03	10:57:00	244.65509	0	115.840965	15.8060074	-2.0141532	201.99585	2.06237793	59.6484337	0	badbad	81.5639725	80.8793716	94.9909439	95.0198975	1360.83435
03/06/03	10:58:00	244.65509	0	111.353653	15.8060074	-2.0141532	201.99585	2.06237793	59.6484337	0	badbad	81.7258911	80.8793716	94.9909439	95.0198975	1360.83435
03/06/03	10:59:00	244.65509	0	111.353653	16.2472095	-2.0141532	201.99585	2.06237793	59.6484337	0	badbad	80.4153519	81.8435898	94.9909439	95.0198975	1360.83435
03/06/03	11:00:00	244.65509	0	111.353653	16.2472095	-2.0141532	201.99585	2.06237793	59.6484337	0	badbad	80.4742661	81.9024429	94.6920013	95.0198975	1360.83435

		MBEL100	BATI013	BAAI046	RMAT500	BATI011	JCFT152	JCFT252	JCFT352	JCFT452	NAET102	NAET202	NAIT101	NAIT201	MAII006A	MAII006B
		Excitation	AH Gas	Excess	Relative	AH Air	Coal Fdr	Coal Fdr	Coal Fdr	Coal Fdr	13.8 Kv	13.8 Kv	13.8 Kv	13.8 Kv	Generator	Generator
		Losses	Outlet	Oxygen	Humidity	Inlet Temp	A Flow	B Flow	C Flow	D Flow	NAA01 Aux	NAAO2 Aux	NAAO1 Aux	NAA02 Aux	Arm Current	Arm Current
			Temp				Rate	Rate	Rate	Rate	Scr Volts	Scr Volts	Scr Current	Scr Current	Phase A	Phase B
DATE	TIME	KW	DEG F	PCT	PCT	DEG F	KPPH	KPPH	KPPH	KPPH	VOLTS	VOLTS	AMPS	AMPS	KA	KA
03/06/03	10:00:00	587.671143	249.973022	4.60333395	72.5341797	107.465561	72.1002197	0.02685483	72.4359055	0.06042493	14039.4287	14231.6885	0.29296178	-0.8056613	4.79882813	4.9355464
03/06/03	10:01:00	587.671143	249.973022	4.34903526	72.5341797	107.465561	75.625	0.02685483	76.6992188	0.06042493	14039.4287	14231.6885	0.29296178	-0.8056613	4.79882813	4.9355464
03/06/03	10:02:00	587.671143	249.973022	4.34903526	73.7854004	107.465561	76.0949631	0.02685483	75.6921387	0.06042493	14039.4287	14231.6885	0.29296178	-0.8056613	4.79882813	4.9355464
03/06/03	10:03:00	587.671143	249.973022	4.34903526	73.7854004	107.465561	78.2434082	0.02685483	76.12854	0.06042493	14039.4287	14231.6885	0.29296178	-0.8056613	4.79882813	4.9355464
03/06/03	10:04:00	587.671143	249.973022	4.34903526	74.822998	107.465561	76.1956787	0.02685483	76.8334961	14.1595449	14039.4287	14231.6885	0.29296178	-0.8056613	4.79882813	4.9355464
03/06/03	10:05:00	587.671143	249.973022	4.34903526	72.6257324	107.465561	78.9147873	0.02685483	78.1091309	14.4616699	14039.4287	14231.6885	0.29296178	-0.8056613	4.79882813	4.9355464
03/06/03	10:06:00	587.671143	249.973022	4.09012079	71.6186523	107.465561	78.9483643	0.02685483	79.5526123	14.4616699	14039.4287	14231.6885	0.29296178	-0.8056613	4.79882813	4.9355464
03/06/03	10:07:00	587.671143	249.973022	3.83065128	71.6186523	107.465561	74.2822266	0.02685483	75.8264084	14.2938223	14039.4287	14231.6885	0.29296178	-0.8056613	4.79882813	4.9355464
03/06/03	10:08:00	587.671143	249.973022	3.83065128	70.5505371	107.465561	71.6973877	0.02685483	71.3281174	18.2550049	14039.4287	14231.6885	0.29296178	-0.8056613	4.79882813	4.9355464
03/06/03	10:09:00	587.671143	249.973022	3.83065128	69.5129395	107.465561	65.8898926	0.02685483	66.4941406	21.8804932	14039.4287	14231.6885	0.29296178	-0.8056613	4.79882813	4.9355464
03/06/03	10:10:00	587.671143	249.973022	4.08495712	69.5129395	107.465561	67.0983887	0.02685483	66.0577393	21.7462158	14039.4287	14231.6885	0.29296178	-0.8056613	4.79882813	4.9355464
03/06/03	10:11:00	587.671143	249.973022	4.08999491	69.5129395	107.465561	63.338623	0.02685483	63.4393311	24.2303467	14039.4287	14231.6885	0.29296178	-0.8056613	4.79882813	4.9355464
03/06/03	10:12:00	587.671143	249.973022	4.08999491	69.5129395	107.465561	60.0488281	0.02685483	59.4445801	22.3168926	14039.4287	14231.6885	0.29296178	-0.8056613	4.79882813	4.9355464
03/06/03	10:13:00	587.671143	249.973022	4.08999491	69.5129395	107.465561	56.322628	0.02685483	55.8862305	21.9476299	14039.4287	14231.6885	0.29296178	-0.8056613	4.79882813	4.9355464
03/06/03	10:14:00	587.671143	249.973022	4.34277296	69.5129395	107.465561	59.6795616	0.02685483	59.7467041	23.2568359	14039.4287	14231.6885	0.29296178	-0.8056613	4.79882813	4.9355464
03/06/03	10:15:00	587.671143	249.973022	4.34277296	69.5129395	107.465561	54.6441612	0.02685483	55.1812706	28.6279278	14039.4287	14231.6885	0.29296178	-0.8056613	4.79882813	4.9355464
03/06/03	10:16:00	587.671143	249.973022	4.35931158	70.5200195	107.465561	60.115963	0.02685483	59.4445801	30.239254	14039.4287	14231.6885	0.29296178	-0.8056613	4.79882813	4.9355464
03/06/03	10:17:00	587.671143	249.973022	4.35931158	69.5129395	107.465561	54.3756065	0.02685483	54.0734825	29.6685753	14039.4287	14231.6885	0.29296178	-0.8056613	4.79882813	4.9355464
03/06/03	10:18:00	587.671143	249.973022	4.35931158	67.3461914	107.465561	55.4498253	0.02685483	56.4904747	30.0042706	14039.4287	14231.6885	0.29296178	-0.8056613	4.79882813	4.9355464
03/06/03	10:19:00	587.671143	249.973022	4.0959568	67.3461914	107.465561	54.4763184	0.02685483	55.2484131	29.6350117	14039.4287	14231.6885	0.29296178	-0.8056613	4.79882813	4.9355464
03/06/03	10:20:00	587.671143	249.973022	4.34779215	67.3461914	107.465561	51.4215088	0.02685483	50.9851036	28.2922325	14039.4287	14231.6885	0.29296178	-0.8056613	4.79882813	4.9355464
03/06/03	10:21:00	587.671143	249.973022	4.34779215	67.3461914	107.465561	55.0469971	0.02685483	55.2484131	29.4335899	14039.4287	14231.6885	0.29296178	-0.8056613	4.79882813	4.9355464
03/06/03	10:22:00	587.671143	249.973022	4.09380102	67.3461914	107.465561	55.1477013	0.02685483	54.9462891	30.1385498	14039.4287	14231.6885	0.29296178	-0.8056613	4.79882813	4.9355464
03/06/03	10:23:00	587.671143	249.973022	4.09380102	67.3461914	107.465561	52.0928917	0.02685483	51.1865196	29.5343018	14039.4287	14231.6885	0.29296178	-0.8056613	4.79882813	4.9355464
03/06/03	10:24:00	587.671143	249.973022	4.09380102	64.0808029	107.465561	56.1883545	0.02685483	54.5098877	29.5343018	14039.4287	14231.6885	0.29296178	-0.8056613	4.79882813	4.9355464
03/06/03	10:25:00	587.671143	249.973022	4.09380102	59.8999023	107.465561	54.3084679	0.02685483	53.5699463	30.1049805	14039.4287	14231.6885	0.29296178	-0.8056613	4.79882813	4.9355464
03/06/03	10:26:00	587.671143	249.973022	4.09380102	61.3342247	107.465561	50.4479942	0.02685483	50.7501221	30.1049805	14039.4287	14231.6885	0.29296178	-0.8056613	4.79882813	4.9355464
03/06/03	10:27:00	587.671143	249.973022	4.09380102	61.3037071	107.465561	51.8914795	0.02685483	51.0858154	27.4194298	14039.4287	14231.6885	0.29296178	-0.8056613	4.79882813	4.9355464
03/06/03	10:28:00	567.638977	249.973022	4.35135174	61.3037071	107.465561	53.3013916	0.02685483	52.9992676	30.0714092	14039.4287	14231.6885	0.29296178	-0.8056613	4.79882813	4.9355464
03/06/03	10:29:00	567.638977	249.973022	3.8451612	63.3789024	107.465561	51.4886436	0.02685483	51.0522461	30.1385498	14039.4287	14231.6885	0.29296178	-0.8056613	4.79882813	4.9355464
03/06/03	10:30:00	567.638977	249.973022	4.09872341	61.2426758	107.465561	52.4957275	0.02685483	52.6635704	29.6014404	14039.4287	14231.6885	0.29296178	-0.8056613	4.79882813	4.9355464
03/06/03	10:31:00	567.638977	249.973022	4.09872341	62.3413048	107.465561	52.8314209	0.02685483	52.3950157	31.8505878	14039.4287	14231.6885	0.29296178	-0.8056613	4.79882813	4.9355464
03/06/03	10:32:00	567.638977	249.973022	4.35236835	64.3859863	107.465561	62.6336632	0.02685483	63.3050499	29.4671612	14039.4287	14231.6885	0.29296178	-0.8056613	4.79882813	4.9355464
03/06/03	10:33:00	567.638977	249.973022	4.08879089	63.3483849	107.465561	56.9268799	0.02685483	56.2890587	30.1385498	14039.4287	14231.6885	0.29296178	-0.8056613	4.79882813	4.9355464
03/06/03	10:34:00	567.638977	249.973022	4.34517527	62.3413048	107.465561	59.9816895	0.02685483	58.6053467	29.6350117	14039.4287	14231.6885	0.29296178	-0.8056613	4.79882813	4.9355464
03/06/03	10:35:00	567.638977	249.973022	4.34517527	61.3037071	107.465561	66.7626953	0.02685483	66.6955566	29.6350117	14039.4287	14231.6885	0.29296178	-0.8056613	4.79882813	4.9355464
03/06/03	10:36:00	567.638977	249.973022	4.08657217	62.3413048	107.465561	63.6743164	0.02685483	63.2714806	29.7692852	14039.4287	14231.6885	0.29296178	-0.8056613	4.79882813	4.9355464
03/06/03	10:37:00	567.638977	249.973022	4.34024811	62.3413048	107.465561	67.333374	0.02685483	66.7962646	29.7021446	14039.4287	14231.6885	0.29296178	-0.8056613	4.79882813	4.9355464
03/06/03	10:38:00	567.638977	249.973022	4.08860159	62.3413048	107.465561	64.9499512	0.02685483	63.0700684	29.5007305	14039.4287	14231.6885	0.29296178	-0.8056613	4.79882813	4.9355464
03/06/03	10:39:00	567.638977	249.973022	4.34050846	63.3789024	107.465561	71.9659424	0.02685483	72.1337814	29.5007305	14039.4287	14231.6885	0.29296178	-0.8056613	4.79882813	4.9355464
03/06/03	10:40:00	567.638977	249.973022	4.07894421	63.3483849	107.465561	68.8104172	0.02685483	67.7362061	29.4000206	14039.4287	14231.6885	0.29296178	-0.8056613	4.79882813	4.9355464
03/06/03	10:41:00	567.638977	249.973022	4.07894421	62.3413048	107.465561	65.1177979	0.02685483	65.1849289	29.2321758	14039.4287	14231.6885	0.29296178	-0.8056613	4.79882813	4.9355464
03/06/03	10:42:00	567.638977	249.973022	4.07894421	63.3789024	107.465561	65.5541992	0.02685483	65.3527832	29.9035664	14039.4287	14231.6885	0.29296178	-0.8056613	4.79882813	4.9355464
03/06/03	10:43:00	567.638977	249.973022	4.07894421	63.3789024	107.465561	66.8633957	0.02685483	66.594841	30.1049805	14039.4287	14231.6885	0.29296178	-0.8056613	4.79882813	4.9355464
03/06/03	10:44:00	567.638977	249.973022	3.81343555	63.3789024	107.465561	62.1301231	0.02685483	62.6000977	30.172121	14039.4287	14231.6885	0.29296178	-0.8056613	4.79882813	4.9355464
03/06/03	10:45:00	567.638977	249.973022	4.06385279	61.1816406	107.465561	64.1778564	0.02685483	64.1442871	29.6014404	14039.4287	14231.6885	0.29296178	-0.8056613	4.79882813	4.9355464
03/06/03	10:46:00	567.638977	249.973022	4.31616545	58.0383263	107.465561	63.137207	0.02685483	67.232666	28.460083	14039.4287	14231.6885	0.29296178	-0.8056613	4.79882813	4.9355464
03/06/03	10:47:00	567.638977	249.973022	4.57009983	58.0383263	107.465561	65.3192139	0.02685483	65.7556076	29.8364258	14039.4287	14231.6885	0.29296178	-0.8056613	4.79882813	4.9355464
03/06/03	10:48:00	567.638977	249.973022	4.31589794	59.0454063	107.465561	67.0648193	0.02685483	66.8969727	30.1385498	14039.4287	14231.6885	0.29296178	-0.8056613	4.79882813	4.9355464
03/06/03	10:49:00	567.638977	249.973022	4.31589794	59.0454063	107.465561	66.729126	0.02685483	67.333374	29.8699951	14039.4287	14231.6885	0.29296178	-0.8056613	4.79882813	4.9355464
03/06/03	10:50:00	567.638977	249.973022	4.32418203	58.0383263	107.465561	67.0648193	0.02685483	65.0170898	29.8699951	14039.4287	14231.6885	0.29296178	-0.8056613	4.79882813	4.9355464
03/06/03	10:51:00	567.638977	249.973022	4.32418203	58.0383263	107.465561	62.6672325	0.02685483	62.7008018	29.8364258	14039.4287	14231.6885	0.29296178	-0.8056613	4.79882813	4.9355464
03/06/03	10:52:00	567.638977	249.973022	4.31774902	59.1064453	107.465561	63.338623	0.02685483	63.6743164	30.1049805	14039.4287	14231.6885	0.29296178	-0.8056613	4.79882813	4.9355464
03/06/03	10:53:00	567.638977	249.973022	4.33325148	56.0241661	107.465561	64.7485352	0.02685483	64.8156738	27.3522949	14039.4287	14231.6885	0.29296178	-0.8056613	4.79882813	4.9355464
03/06/03	10:54:00	567.638977	249.973022	4.33325148	52.8503418	107.465561	58.034668	0.02685483	58.5717735	30.1049805	14039.4287	14231.6885	0.29296178	-0.8056613	4.79882813	4.9355464
03/06/03	10:55:00	567.638977	249.973022	4.59634829	53.9184532	107.465561	62.7343712	0.02685483	63.9093018	29.1650372	14039.4287	14231.6885	0.29296178	-0.8056613	4.79882813	4.9355464
03/06/03	10:56:00	567.638977	249.973022	4.33038807	53.9184532	107.465561	65.3863525	0.02685483	66.6619873	29.4335899	14039.4287	14231.6885	0.29296178	-0.8056613	4.79882813	4.9355464
03/06/03	10:57:00	567.638977	249.973022	4.07677555	49.798584	107.465561	62.6336632	0.02685483	62.3651085	32.5891113	14039.4287	14231.6885	0.29296178	-0.8056613	4.79882813	4.9355464
03/06/03	10:58:00	567.638977	249.973022	4.07677555	47.6318321	107.465561	59.8809776	0.02685483	58.7731895	29.5007305	14039.4287	14231.6885	0.29296178	-0.8056613	4.79882813	4.9355464
03/06/03	10:59:00	567.638977	249.973022	4.33641052	47.6318321	107.465561	59.0081749	0.02685483	58.8739014	30.0042706	14039.4287	14231.6885	0.29296178	-0.8056613	4.79882813	4.9355464
03/06/03	11:00:00	567.638977	249.973022	4.33641052	46.5637169	107.465561	65.1849289	0.02685483	65.0842285	30.2056904	14039.4287	14231.6885	0.29296178	-0.8056613	4.79882813	4.9355464

		MAII006C Generator Arm Current Phase C	RMTT500 Ambient Temp	ADFI001 Cond Xfer Flow Calculated	ADLT001 Condenser Hotwell Level	TSTMFLO Total Stm Flow	BAFI002 Total Air Flow	REAI001 CEMS CO2	BAAI052 Boiler CO	BATE055 SCR Outlet Temp.	BATI020 AH Air Outlet Temp.	AEFY136 Fisher FW Valve Demand	
DATE	TIME	KA	DEG F	KPPH	IN	KPPH	KPPH	%	PPM	DEG F	DEG F	%	
03/06/03	10:00:00	4.99902344	80.9814377	168.097687	47.7392578	1361.43738	2164.15381	11.0888662	0	627.872498	549.849731	0 44.2785797	
03/06/03	10:01:00	4.99902344	80.9814377	178.556213	47.7392578	1361.43738	2164.15381	10.8813467	0	627.872498	549.849731	0 44.2785797	
03/06/03	10:02:00	4.99902344	80.9814377	177.63089	47.2558594	1361.43738	2129.48755	10.8935537	0	627.872498	549.849731	0 44.2785797	
03/06/03	10:03:00	4.99902344	80.9814377	180.468735	47.2558594	1361.43738	2129.48755	11.0888662	0	627.872498	549.849731	0 44.2785797	
03/06/03	10:04:00	4.99902344	80.9814377	180.924744	47.2558594	1361.43738	2129.48755	11.0949697	0	627.872498	549.849731	0 44.2785797	
03/06/03	10:05:00	4.99902344	80.9814377	194.74292	47.2558594	1361.43738	2129.48755	11.0949697	0	627.872498	549.849731	0 44.2785797	
03/06/03	10:06:00	4.99902344	80.9814377	191.973007	47.2558594	1361.43738	2129.48755	11.0949697	0	627.872498	549.849731	0 43.2206917	
03/06/03	10:07:00	4.99902344	80.9814377	193.824005	47.2558594	1361.43738	2129.48755	11.0949697	0	627.872498	549.849731	0 43.2206917	
03/06/03	10:08:00	4.99902344	80.9814377	191.758286	47.2558594	1361.43738	2129.48755	11.2902822	0	627.872498	549.849731	0 42.1071205	
03/06/03	10:09:00	4.99902344	80.9814377	176.077881	47.2558594	1361.43738	2129.48755	11.1865225	0	627.872498	549.849731	0 43.1775856	
03/06/03	10:10:00	4.99902344	80.9814377	178.863602	47.2558594	1361.43738	2166.87988	11.3879385	0	627.872498	549.849731	0 43.1775856	
03/06/03	10:11:00	4.99902344	80.9814377	176.311691	47.2558594	1361.43738	2166.87988	11.1865225	0	627.872498	549.849731	0 43.1775856	
03/06/03	10:12:00	4.99902344	80.9814377	175.921814	47.2558594	1361.43738	2166.87988	11.1865225	0	627.872498	549.849731	0 43.1775856	
03/06/03	10:13:00	4.99902344	80.9814377	161.259537	47.2558594	1361.43738	2166.87988	11.3879385	0	627.872498	549.849731	0 43.1775856	
03/06/03	10:14:00	4.99902344	80.9814377	154.918152	47.7392578	1361.43738	2166.87988	11.1865225	0	627.872498	549.849731	0 44.190731	
03/06/03	10:15:00	4.99902344	80.9814377	156.330063	47.7392578	1361.43738	2202.17603	11.1865225	0	627.872498	549.849731	0 44.190731	
03/06/03	10:16:00	5.16015625	80.9814377	177.553574	47.7392578	1361.43738	2167.68848	10.9851065	0	627.872498	549.849731	0 44.190731	
03/06/03	10:17:00	5.16015625	80.9814377	178.479279	47.7392578	1361.43738	2205.68701	10.9851065	0	627.872498	549.849731	0 45.1964455	Total Coal Feed
03/06/03	10:18:00	5.16015625	80.9814377	176.233795	47.7392578	1361.43738	2172.77295	10.9790039	0	627.872498	549.849731	0 44.1290169	141.971425
03/06/03	10:19:00	5.16015625	82.5683517	173.722321	47.7392578	1361.43738	2172.77295	10.9851065	0	627.872498	549.849731	0 44.1290169	139.386598
03/06/03	10:20:00	5.16015625	82.5683517	178.556213	47.2558594	1361.43738	2174.18604	11.0827627	0	627.872498	549.849731	0 44.1290169	130.7257
03/06/03	10:21:00	5.16015625	82.5683517	176.856094	47.2558594	1361.43738	2139.61255	11.0888662	0	627.872498	549.849731	0 44.1341705	139.755855
03/06/03	10:22:00	5.16015625	82.5683517	179.935303	47.2558594	1361.43738	2177.71069	11.0888662	0	627.872498	549.849731	0 44.1341705	140.259395
03/06/03	10:23:00	5.16015625	82.5683517	177.553574	47.2558594	1361.43738	2175.99438	10.8874502	0	627.872498	549.849731	0 44.0905228	132.840568
03/06/03	10:24:00	5.16015625	82.5683517	177.166412	47.2558594	1361.43738	2175.99438	11.0888662	0	627.872498	549.849731	0 44.0905228	140.259399
03/06/03	10:25:00	5.16015625	82.5683517	175.999863	47.2558594	1361.43738	2174.44995	11.0888662	0	627.872498	549.849731	0 44.0905228	138.010249
03/06/03	10:26:00	5.16015625	82.5683517	166.620667	47.2558594	1361.43738	2173.75732	11.0888662	0	627.872498	549.849731	0 44.0166664	131.329952
03/06/03	10:27:00	5.16015625	82.5683517	157.03125	47.2558594	1361.43738	2173.75732	11.0888662	0	627.872498	549.849731	0 45.0204926	130.42358
03/06/03	10:28:00	5.16015625	82.5683517	159.633301	47.7539063	1361.43738	2137.99902	11.0827627	0	627.872498	549.849731	0 42.8966141	136.398923
03/06/03	10:29:00	5.16015625	82.5683517	156.417892	47.7539063	1361.43738	2174.56519	10.9851065	0	627.872498	549.849731	0 43.9336777	132.706294
03/06/03	10:30:00	5.16015625	82.5683517	152.235535	47.7539063	1361.43738	2174.89136	10.9851065	0	627.872498	549.849731	0 43.9336777	134.787593
03/06/03	10:31:00	5.16015625	82.5683517	134.311401	48.2519531	1361.43738	2173.93726	11.3879385	0	627.872498	549.849731	0 44.9536743	137.103879
03/06/03	10:32:00	5.16015625	82.5683517	134.413589	48.2519531	1361.43738	2139.27026	10.9790039	0	627.872498	549.849731	0 43.9264946	155.432729
03/06/03	10:33:00	5.16015625	82.5683517	150.603012	48.2519531	1361.43738	2173.83545	10.8813467	0	627.872498	549.849731	0 45.0284348	143.381343
03/06/03	10:34:00	5.16015625	82.5683517	153.582687	48.2519531	1361.43738	2170.97388	11.0827627	0	627.872498	549.849731	0 42.9962158	148.248903
03/06/03	10:35:00	5.16015625	82.5683517	158.684143	47.7685509	1361.43738	2131.65479	11.1682129	0	627.872498	549.849731	0 42.9962158	163.120118
03/06/03	10:36:00	5.16015625	82.5683517	153.314224	47.7685509	1361.43738	2166.43384	10.9118652	0	627.872498	549.849731	0 44.039856	156.741937
03/06/03	10:37:00	5.16015625	82.5683517	155.449112	47.7685509	1361.43738	2166.38037	11.1376944	0	627.872498	549.849731	0 44.039856	163.858638
03/06/03	10:38:00	5.16015625	82.5683517	158.684143	47.7685509	1361.43738	2131.07983	11.1376944	0	627.872498	549.849731	0 43.0025291	157.547605
03/06/03	10:39:00	5.16015625	82.5683517	159.116287	47.7685509	1361.43738	2131.07983	11.2841797	0	627.872498	549.849731	0 43.0025291	173.627309
03/06/03	10:40:00	5.16015625	82.5683517	165.047272	47.2851563	1361.43738	2131.07983	11.2841797	0	627.872498	549.849731	0 43.0025291	165.973499
03/06/03	10:41:00	5.16015625	82.5683517	177.708176	47.2851563	1361.43738	2172.55859	11.2902822	0	627.872498	549.849731	0 43.0025291	159.561757
03/06/03	10:42:00	4.99414063	82.5683517	176.233795	47.2851563	1361.43738	2135.14355	11.2902822	0	627.872498	549.849731	0 42.9985542	160.837404
03/06/03	10:43:00	4.99414063	82.5683517	170.2892	47.2851563	1361.43738	2169.91968	11.2902822	0	627.872498	549.849731	0 41.9734306	163.590072
03/06/03	10:44:00	4.99414063	82.5683517	172.771103	47.2851563	1361.43738	2171.06323	11.2841797	0	627.872498	549.849731	0 41.9734306	154.929197
03/06/03	10:45:00	4.99414063	82.5683517	172.850571	47.2851563	1361.43738	2171.06323	11.2841797	0	627.872498	549.849731	0 42.9783897	157.950439
03/06/03	10:46:00	4.99414063	84.0942307	177.63089	47.2851563	1361.43738	2171.06323	11.4855957	0	627.872498	549.849731	0 44.0179977	158.856811
03/06/03	10:47:00	4.99414063	84.0942307	165.960007	47.2851563	1361.43738	2171.06323	11.4855957	0	627.872498	549.849731	0 44.0179977	160.938102
03/06/03	10:48:00	4.99414063	84.0942307	176.933731	47.2851563	1361.43738	2171.06323	11.3879385	0	627.872498	549.849731	0 42.9360046	164.127197
03/06/03	10:49:00	4.99414063	84.0942307	181.000626	46.801754	1361.43738	2171.06323	11.1865225	0	627.872498	549.849731	0 42.9360046	163.95935
03/06/03	10:50:00	4.99414063	84.0942307	180.924744	46.801754	1361.43738	2171.06323	11.3879385	0	627.872498	549.849731	0 44.0806427	161.978759
03/06/03	10:51:00	4.99414063	84.0942307	175.21785	46.801754	1361.43738	2171.06323	11.5893555	0	627.872498	549.849731	0 44.1364937	155.231315
03/06/03	10:52:00	4.99414063	84.0942307	181.455307	46.801754	1361.43738	2134.46826	11.3879385	0	627.872498	549.849731	0 43.074791	157.144775
03/06/03	10:53:00	4.99414063	84.0942307	190.392731	46.801754	1361.43738	2170.79541	11.3879385	0	627.872498	549.849731	0 44.0843163	156.943359
03/06/03	10:54:00	4.99414063	84.0942307	195.938065	46.801754	1361.43738	2170.79541	11.1804199	0	627.872498	549.849731	0 44.0843163	146.738277
03/06/03	10:55:00	4.99414063	84.0942307	183.03772	46.801754	1361.43738	2170.79541	11.3879385	0	627.872498	549.849731	0 44.1561089	155.835565
03/06/03	10:56:00	4.99414063	84.0942307	181.908813	46.801754	1361.43738	2133.27271	11.3879385	0	627.872498	549.849731	0 43.1095314	161.508785
03/06/03	10:57:00	4.99414063	84.0942307	190.753021	46.3183594	1361.43738	2170.08984	11.192626	0	627.872498	549.849731	0 43.1095314	157.614738
03/06/03	10:58:00	4.99414063	84.0942307	197.751953	46.3183594	1361.43738	2172.2937	11.4855957	0	627.872498	549.849731	0 44.1623993	148.181753
03/06/03	10:59:00	4.99414063	84.0942307	193.114182	46.3183594	1361.43738	2134.24438	11.4855957	0	627.872498	549.849731	0 44.1623993	147.913202
03/06/03	11:00:00	4.99414063	84.0942307	195.727692	46.3183594	1361.43738	2132.24194	11.2841797	0	627.872498	549.849731	0 43.1218376	160.501703

DATE	TIME	MAJI007 Generator Megawatts MW	MAJI008 Generator Megavars MVAR	NAJT101 13.8 kv NAA01 Gen Aux Load MW	NAJT201 13.8 kv NAA02 Gen Aux Load MW	AEFI135 FW Flow Comp. KPPH	AEFI131 SH Spray Flow KPPH	FDFI002 Sootblower Steam Flow KPPH	FDFI022 SCR Sootblower Stm Flow KPPH	AAFY018A Cont. Blowdown Flow PCT	FBFI021 MS to Aux Stm. Flow KPPH	AETE137 Feedwater Temp. DEG F	AAPTOO6 Selected Drum Pressure PSIG	FDPT002 Sootblower Steam Pressure PSIG	FDTT002 Sootblower Steam Temp. DEG F	FDPT022 A.H. Sootblower Stm. Press PSIG
03/06/03	11:01:00	200.927719	11.8346987	14.4543457	7.75268555	1444.05554	19.2486248	0	1.95849788	0	0	428.381531	2476.74561	319.763184	669.921875	380.493164
03/06/03	11:02:00	200.927719	11.8346987	14.4543457	8.07312012	1477.4989	19.2486248	0	1.95849788	0	0	428.381531	2476.74561	319.763184	669.921875	380.493164
03/06/03	11:03:00	200.927719	11.8346987	14.4543457	7.70690823	1477.4989	42.9433746	0	1.95849788	0	0	428.381531	2476.74561	319.763184	669.921875	380.493164
03/06/03	11:04:00	200.927719	11.8346987	14.4543457	7.68859863	1477.4989	32.3135376	0	1.95849788	0	0	428.381531	2476.74561	319.763184	669.921875	380.493164
03/06/03	11:05:00	200.927719	11.8346987	14.4543457	7.68859863	1444.70105	23.2147236	0	1.95849788	0	0	428.381531	2476.74561	319.763184	669.921875	380.493164
03/06/03	11:06:00	200.927719	18.8842583	14.4543457	7.76184082	1444.70105	23.2147236	0	1.95849788	0	0	428.381531	2476.74561	319.763184	669.921875	380.493164
03/06/03	11:07:00	200.927719	18.8842583	14.4543457	7.76184082	1475.5321	37.7239571	0	1.95849788	0	0	428.381531	2476.74561	319.763184	669.921875	380.493164
03/06/03	11:08:00	200.927719	18.8842583	14.4543457	7.76184082	1475.5321	41.9514542	0	1.95849788	0	0	428.381531	2476.74561	319.763184	669.921875	380.493164
03/06/03	11:09:00	200.927719	18.8842583	14.4543457	7.56042385	1475.5321	24.1045189	0	1.95849788	0	0	428.381531	2476.74561	319.763184	669.921875	380.493164
03/06/03	11:10:00	200.927719	18.8842583	14.4543457	7.89916945	1475.5321	20.3129025	0	1.95849788	0	0	428.381531	2476.74561	319.763184	669.921875	380.493164
03/06/03	11:11:00	200.927719	18.8842583	14.4543457	7.47802639	1475.5321	20.3129025	0	1.95849788	0	0	428.381531	2476.74561	319.763184	669.921875	380.493164
03/06/03	11:12:00	200.927719	18.8842583	14.4543457	7.77099657	1475.5321	42.9433746	0	1.95849788	0	0	415.595795	2476.74561	319.763184	669.921875	380.493164
03/06/03	11:13:00	200.927719	10.9802275	14.4543457	7.77099657	1475.5321	28.8729362	0	1.95849788	0	0	415.595795	2476.74561	319.763184	669.921875	380.493164
03/06/03	11:14:00	200.927719	10.9802275	14.4543457	8.05480957	1475.5321	20.3129025	0	1.95849788	0	0	415.595795	2476.74561	319.763184	669.921875	380.493164
03/06/03	11:15:00	200.927719	10.9802275	14.4543457	8.0273428	1475.5321	20.3129025	0	1.95849788	0	0	415.595795	2476.74561	319.763184	669.921875	380.493164
03/06/03	11:16:00	200.927719	10.9802275	14.4543457	7.86254787	1507.86365	37.161705	0	1.95849788	0	0	415.595795	2476.74561	319.763184	669.921875	380.493164
03/06/03	11:17:00	200.927719	10.9802275	14.4543457	7.58789015	1507.86365	40.9355507	0	1.95849788	0	0	415.595795	2476.74561	319.763184	669.921875	380.493164
03/06/03	11:18:00	200.927719	3.93066907	14.4543457	7.66113234	1476.78711	23.2147236	0	1.95849788	0	0	415.595795	2476.74561	319.763184	669.921875	380.493164
03/06/03	11:19:00	200.927719	3.93066907	14.4543457	7.92663622	1476.78711	23.2147236	0	1.95849788	0	0	415.595795	2476.74561	319.763184	669.921875	380.493164
03/06/03	11:20:00	200.927719	3.93066907	14.4543457	7.96325636	1507.62488	23.2147236	0	1.95849788	0	0	415.595795	2476.74561	319.763184	669.921875	380.493164
03/06/03	11:21:00	200.927719	3.93066907	14.7564688	7.78930569	1507.62488	39.3624954	0	1.95849788	0	0	409.541351	2476.74561	319.763184	669.921875	380.493164
03/06/03	11:22:00	200.927719	3.93066907	14.7564688	8.00903416	1475.81934	28.134428	0	1.95849788	0	0	409.541351	2476.74561	319.763184	669.921875	380.493164
03/06/03	11:23:00	200.927719	3.93066907	14.7564688	7.95410061	1444.27832	23.2147236	0	1.95849788	0	0	409.541351	2476.74561	319.763184	669.921875	380.493164
03/06/03	11:24:00	200.927719	3.93066907	14.7564688	7.98156738	1474.81628	23.2147236	0	1.95849788	0	0	409.541351	2476.74561	319.763184	669.921875	380.493164
03/06/03	11:25:00	200.927719	3.93066907	14.7564688	7.89916945	1474.81628	48.9027481	0	1.95849788	0	0	409.541351	2476.74561	319.763184	669.921875	380.493164
03/06/03	11:26:00	200.927719	12.0483265	14.7564688	7.89916945	1442.59412	43.9128456	0	1.95849788	0	0	409.541351	2476.74561	319.763184	669.921875	380.493164
03/06/03	11:27:00	200.927719	12.0483265	14.7564688	7.58789015	1442.96985	22.2894325	0	1.95849788	0	0	409.541351	2476.74561	319.763184	669.921875	380.493164
03/06/03	11:28:00	200.927719	12.0483265	14.7564688	7.78015184	1442.96985	22.2894325	0	1.95849788	0	0	409.541351	2476.74561	319.763184	669.921875	380.493164
03/06/03	11:29:00	200.927719	12.0483265	14.7564688	7.60620117	1442.96985	59.3992538	0	1.95849788	0	0	409.541351	2476.74561	319.763184	669.921875	380.493164
03/06/03	11:30:00	200.927719	12.0483265	14.7564688	8.10974026	1442.96985	43.4307899	0	1.95849788	0	0	409.541351	2476.74561	319.763184	669.921875	380.493164
03/06/03	11:31:00	200.927719	12.0483265	14.7564688	7.73437452	1442.96985	22.2894325	0	1.95849788	0	0	409.541351	2476.74561	319.763184	669.921875	380.493164
03/06/03	11:32:00	200.927719	12.0483265	14.4451895	8.07312012	1442.96985	22.2894325	0	1.95849788	0	0	409.541351	2476.74561	319.763184	679.992676	380.493164
03/06/03	11:33:00	200.927719	4.99876785	14.4451895	7.68859863	1475.96155	62.8435135	0	1.95849788	0	0	409.541351	2476.74561	319.763184	679.992676	380.493164
03/06/03	11:34:00	200.927719	4.99876785	14.7473135	8.0456543	1475.96155	45.7903023	0	1.95849788	0	0	409.541351	2476.74561	319.763184	679.992676	380.493164
03/06/03	11:35:00	205.96312	4.99876785	14.7473135	7.69775438	1442.66541	21.3241291	0	1.95849788	0	0	409.541351	2476.74561	319.763184	679.992676	380.493164
03/06/03	11:36:00	205.96312	4.99876785	14.7473135	7.56042385	1442.66541	21.3241291	0	1.95849788	0	0	409.541351	2476.74561	319.763184	679.992676	380.493164
03/06/03	11:37:00	205.96312	4.99876785	14.7473135	7.89001417	1473.68835	62.5076256	0	1.95849788	0	0	409.541351	2476.74561	319.763184	679.992676	380.493164
03/06/03	11:38:00	205.96312	4.99876785	14.7473135	7.89001417	1473.68835	55.7425728	0	1.95849788	0	0	403.263947	2476.74561	319.763184	679.992676	380.493164
03/06/03	11:39:00	205.96312	4.99876785	14.7473135	8.03649807	1473.68835	21.3241291	0	1.95849788	0	0	403.263947	2476.74561	319.763184	679.992676	380.493164
03/06/03	11:40:00	205.96312	4.99876785	14.7473135	7.72521877	1473.68835	21.3241291	0	1.95849788	0	0	403.263947	2476.74561	319.763184	679.992676	380.493164
03/06/03	11:41:00	205.96312	4.99876785	14.7473135	7.91748047	1505.83447	56.1189728	0	1.95849788	0	0	403.263947	2476.74561	319.763184	679.992676	380.493164
03/06/03	11:42:00	205.96312	4.99876785	14.7473135	7.91748047	1474.46936	56.1189728	0	1.95849788	0	0	403.263947	2476.74561	319.763184	679.992676	380.493164
03/06/03	11:43:00	205.96312	4.99876785	14.7473135	7.93579006	1441.00305	21.3241291	0	1.95849788	0	0	403.263947	2476.74561	319.763184	679.992676	380.493164
03/06/03	11:44:00	205.96312	4.99876785	14.7473135	7.63366604	1441.00305	21.3241291	0	1.95849788	0	0	403.263947	2476.74561	319.763184	679.992676	380.493164
03/06/03	11:45:00	205.96312	4.99876785	14.7473135	7.98156738	1471.40857	64.4966812	0	1.95849788	0	0	403.263947	2476.74561	319.763184	679.992676	380.493164
03/06/03	11:46:00	205.96312	4.99876785	14.7473135	7.98156738	1471.40857	63.5099411	0	1.95849788	0	0	403.263947	2476.74561	319.763184	679.992676	380.493164
03/06/03	11:47:00	205.96312	4.99876785	14.7473135	7.98156738	1439.0199	22.2894325	0	1.95849788	0	0	397.025635	2476.74561	319.763184	679.992676	380.493164
03/06/03	11:48:00	205.96312	4.99876785	14.7473135	7.98156738	1439.0199	18.1219501	0	1.95849788	0	0	397.025635	2476.74561	319.763184	679.992676	380.493164
03/06/03	11:49:00	205.96312	4.99876785	14.7473135	7.84423828	1439.0199	70.4257736	0	1.95849788	0	0	397.025635	2476.74561	319.763184	679.992676	380.493164
03/06/03	11:50:00	205.96312	4.99876785	14.7473135	7.84423828	1439.0199	70.4257736	0	1.95849788	0	0	397.025635	2476.74561	319.763184	679.992676	380.493164
03/06/03	11:51:00	205.96312	4.99876785	14.7473135	7.83508301	1439.0199	25.7921047	0	1.95849788	0	0	397.025635	2476.74561	319.763184	679.992676	380.493164
03/06/03	11:52:00	205.96312	4.99876785	14.7473135	8.08227539	1439.0199	21.3241291	0	1.95849788	0	0	397.025635	2476.74561	319.763184	679.992676	380.493164
03/06/03	11:53:00	205.96312	4.99876785	14.7473135	7.78930569	1439.0199	66.7424088	0	1.95849788	0	0	397.025635	2476.74561	319.763184	679.992676	380.493164
03/06/03	11:54:00	205.96312	4.99876785	14.7473135	7.8808589	1470.86047	70.7240753	0	1.95849788	0	0	397.025635	2476.74561	319.763184	679.992676	380.493164
03/06/03	11:55:00	205.96312	4.99876785	14.7473135	7.8808589	1437.55627	22.2894325	0	1.95849788	0	0	397.025635	2476.74561	319.763184	679.992676	380.493164
03/06/03	11:56:00	205.96312	4.99876785	14.4451895	7.8808589	1437.55627	18.1219501	0	1.95849788	0	0	397.025635	2476.74561	319.763184	679.992676	380.493164
03/06/03	11:57:00	205.96312	4.99876785	14.4451895	7.8808589	1471.23181	60.1039085	0	1.95849788	0	0	397.025635	2476.74561	319.763184	679.992676	380.493164
03/06/03	11:58:00	205.96312	4.99876785	14.4451895	8.09142971	1471.23181	64.8222656	0	1.95849788	0	0	397.025635	2476.74561	319.763184	679.992676	380.493164
03/06/03	11:59:00	205.96312	4.99876785	14.4451895	7.78015184	1471.23181	27.3759308	0	1.95849788	0	0	397.025635	2476.74561	319.763184	679.992676	380.493164
03/06/03	12:00:00	205.96312	4.99876785	14.4451895	8.08227539	1471.23181	20.3129025	0	1.95849788	0	0	397.025635	2476.74561	319.763184	679.992676	380.493164
03/06/03	12:01:00	205.96312	4.99876785	14.4451895	7.77099657	1471.23181	40.4180031	0	1.95849788	0	0	397.025635	2476.74561	319.763184	679.992676	380.493164

DATE	TIME	FDTT022 SCR/AH Sootblower Stm Temp DEG F	ABPIOO7 Turbine Throttle Pressure PSIG	ABTE008 Main Stm Temp DEG F	AEFI111 Reheater Spray Flow KPPH	ABPI010 Cold Reheat Stm Press PSIG	ABTE016 Cold Reheat Temp DEG F	ABPT024 Hot Reheat Pressure PSIG	ABTE022 Hot Reheat Temp DEG F	AETE119 BFP Hdr Discharge Temp DEG F	AETE130 FW Htr #7 Outlet Temp DEG F	AETE035 FW Htr #7 Casc Drain Temp DEG F	AFPT026 Cold Reheat Ext Hdr Press PSIG	AFTE027 Cold Reheat Ext Hdr Temp DEG F	AFTI017 HP Aux Steam Temp DEG F	AFFI017 Spray Flow to HP Aux Steam KPPH
03/06/03	11:01:00	803.588867	2414.06226	977.910339	0	315.184723	542.545898	295.654266	915.792419	354.580658	422.606781	353.330078	314.575195	544.931641	386.128723	0
03/06/03	11:02:00	803.588867	2414.06226	984.455811	0	315.184723	542.545898	295.654266	915.792419	354.580658	422.606781	353.330078	314.575195	544.931641	386.128723	0
03/06/03	11:03:00	803.588867	2414.06226	989.35675	0	315.184723	542.545898	295.654266	915.792419	354.580658	422.606781	353.330078	314.575195	544.931641	386.128723	0
03/06/03	11:04:00	803.588867	2414.06226	981.199768	0	315.184723	542.545898	295.654266	915.792419	354.580658	422.606781	353.330078	314.575195	544.931641	386.128723	0
03/06/03	11:05:00	803.588867	2417.72437	976.288269	0	315.184723	542.545898	295.654266	915.792419	354.580658	422.606781	353.330078	314.575195	544.931641	386.128723	0
03/06/03	11:06:00	803.588867	2414.06226	981.199768	0	315.184723	542.545898	295.654266	915.792419	354.580658	422.606781	353.330078	314.575195	544.931641	386.128723	0
03/06/03	11:07:00	803.588867	2417.72437	987.711792	0	315.184723	542.545898	295.654266	915.792419	354.580658	422.606781	353.330078	314.575195	544.931641	386.128723	0
03/06/03	11:08:00	803.588867	2421.38672	986.078125	0	315.184723	542.545898	295.654266	915.792419	354.580658	422.606781	353.330078	314.575195	544.931641	386.128723	0
03/06/03	11:09:00	803.588867	2417.72437	977.899109	0	315.184723	542.545898	295.654266	915.792419	354.580658	422.606781	353.330078	314.575195	544.931641	386.128723	0
03/06/03	11:10:00	803.588867	2417.72437	979.521362	0	315.184723	542.545898	295.654266	917.46991	354.580658	422.606781	353.330078	314.575195	544.931641	386.128723	0
03/06/03	11:11:00	803.588867	2414.06226	986.577759	0	315.184723	542.545898	295.654266	917.46991	354.580658	422.606781	353.330078	279.174805	544.931641	386.128723	0
03/06/03	11:12:00	803.588867	2417.72437	988.222656	0	315.184723	542.545898	295.654266	917.46991	354.580658	416.23468	353.330078	269.104004	537.020996	386.128723	0
03/06/03	11:13:00	803.588867	2417.72437	980.009705	0	315.184723	542.545898	295.654266	915.792358	354.580658	416.23468	353.330078	269.104004	537.020996	386.128723	0
03/06/03	11:14:00	803.588867	2414.06226	976.742798	0	315.184723	542.545898	295.654266	914.148499	354.580658	416.23468	353.330078	269.104004	537.020996	386.128723	0
03/06/03	11:15:00	803.588867	2417.72437	983.254333	0	315.184723	542.545898	295.654266	914.148499	354.580658	416.23468	353.330078	269.104004	537.020996	386.128723	0
03/06/03	11:16:00	803.588867	2418.64014	986.521606	0	315.184723	542.545898	295.654266	914.148499	354.580658	410.218384	353.330078	269.104004	537.020996	386.128723	0
03/06/03	11:17:00	803.588867	2414.97803	983.231873	0	315.184723	542.545898	295.654266	914.148499	354.580658	410.218384	353.330078	269.104004	537.020996	386.128723	0
03/06/03	11:18:00	803.588867	2411.31592	975.053284	0	315.184723	542.545898	295.654266	914.092346	354.580658	410.218384	353.330078	269.104004	537.020996	386.128723	0
03/06/03	11:19:00	803.588867	2407.65356	979.942322	0	323.363434	542.545898	295.654266	914.092346	354.580658	410.218384	353.330078	269.104004	537.020996	386.128723	0
03/06/03	11:20:00	803.588867	2407.65356	986.465454	0	323.363434	542.545898	295.654266	914.092346	354.580658	410.218384	353.330078	269.104004	537.020996	386.128723	0
03/06/03	11:21:00	803.588867	2403.9917	988.087891	0	323.363434	542.545898	295.654266	914.092346	354.580658	410.218384	353.330078	269.104004	537.020996	386.128723	0
03/06/03	11:22:00	803.588867	2407.65356	979.352905	0	323.363434	542.545898	295.654266	915.680115	354.580658	410.218384	353.330078	269.104004	537.020996	386.128723	0
03/06/03	11:23:00	803.588867	2403.9917	977.730652	0	323.363434	542.545898	295.654266	915.680115	354.580658	410.218384	353.330078	269.104004	537.020996	386.128723	0
03/06/03	11:24:00	803.588867	2400.32959	985.875977	0	323.363434	542.545898	295.654266	917.279114	354.580658	410.218384	353.330078	269.104004	537.020996	386.128723	0
03/06/03	11:25:00	803.588867	2407.65356	990.765991	0	323.363434	542.545898	295.654266	918.911865	354.580658	410.218384	353.330078	269.104004	537.020996	386.128723	0
03/06/03	11:26:00	803.588867	2407.65356	982.575012	0	323.363434	542.545898	295.654266	918.911865	354.580658	410.218384	353.330078	269.104004	537.020996	386.128723	0
03/06/03	11:27:00	803.588867	2407.65356	976.029968	0	323.363434	542.545898	295.654266	920.510742	354.580658	410.218384	353.330078	269.104004	537.020996	386.128723	0
03/06/03	11:28:00	803.588867	2411.31592	984.730774	0	323.363434	542.545898	295.654266	920.510742	354.580658	410.218384	353.330078	269.104004	537.020996	386.128723	0
03/06/03	11:29:00	803.588867	2411.31592	991.254456	0	323.363434	542.545898	295.654266	920.510742	354.580658	410.218384	353.330078	269.104004	537.020996	386.128723	0
03/06/03	11:30:00	803.588867	2411.31592	984.685852	0	323.363434	554.751282	295.654266	920.510742	354.580658	410.218384	353.330078	259.033203	537.020996	386.128723	0
03/06/03	11:31:00	803.588867	2411.31592	976.49585	0	323.363434	554.751282	295.654266	920.510742	354.580658	410.218384	353.330078	259.033203	537.020996	386.128723	0
03/06/03	11:32:00	803.588867	2411.31592	984.64093	0	323.363434	554.751282	295.654266	920.510742	354.580658	410.218384	353.330078	259.033203	537.020996	386.128723	0
03/06/03	11:33:00	803.588867	2418.64014	992.231384	0	323.363434	554.751282	295.654266	920.510742	354.580658	410.218384	353.330078	259.033203	537.020996	386.128723	0
03/06/03	11:34:00	803.588867	2418.64014	985.68512	0	323.363434	554.751282	295.654266	919.298889	354.580658	410.218384	353.330078	248.962418	537.020996	386.128723	0
03/06/03	11:35:00	803.588867	2414.97803	975.850403	0	323.363434	554.751282	295.654266	919.298889	354.580658	410.218384	353.330078	248.962418	537.020996	386.128723	0
03/06/03	11:36:00	803.588867	2418.64014	983.984192	0	323.363434	554.751282	295.654266	919.298889	354.580658	410.218384	353.330078	248.962418	537.020996	386.128723	0
03/06/03	11:37:00	803.588867	2418.64014	993.752869	0	323.363434	554.751282	295.654266	919.298889	354.580658	410.218384	353.330078	248.962418	537.020996	386.128723	0
03/06/03	11:38:00	803.588867	2422.302	987.195251	0	323.363434	554.751282	295.654266	918.087036	354.580658	403.918396	353.330078	248.962418	537.020996	386.128723	0
03/06/03	11:39:00	803.588867	2421.38672	975.749329	0	323.363434	554.751282	305.725067	918.087036	354.580658	403.918396	353.330078	248.962418	537.020996	386.128723	0
03/06/03	11:40:00	803.588867	2417.72437	983.905579	0	323.363434	554.751282	305.725067	916.431885	354.580658	403.918396	353.330078	248.962418	537.020996	386.128723	0
03/06/03	11:41:00	803.588867	2410.40039	992.062927	0	323.363434	554.751282	305.725067	916.431885	354.580658	403.918396	353.330078	248.962418	537.020996	386.128723	0
03/06/03	11:42:00	803.588867	2410.40039	987.15033	0	323.363434	554.751282	305.725067	916.431885	354.580658	403.918396	353.330078	238.891617	537.020996	386.128723	0
03/06/03	11:43:00	803.588867	2406.73828	978.993652	0	323.363434	554.751282	305.725067	914.754333	354.580658	403.918396	353.330078	238.891617	537.020996	386.128723	0
03/06/03	11:44:00	803.588867	2406.73828	983.961792	0	323.363434	554.751282	305.725067	914.754333	354.580658	403.918396	353.330078	238.891617	537.020996	386.128723	0
03/06/03	11:45:00	803.588867	2406.73828	993.854065	0	323.363434	554.751282	305.725067	916.465637	354.580658	403.918396	353.330078	228.820786	537.020996	386.128723	0
03/06/03	11:46:00	803.588867	2406.73828	989.05365	0	323.363434	554.751282	305.725067	916.465637	354.580658	397.681641	353.330078	228.820786	537.020996	386.128723	0
03/06/03	11:47:00	803.588867	2403.07593	977.719604	0	323.363434	554.751282	305.725067	916.465637	354.580658	397.681641	353.330078	228.820786	537.020996	386.128723	0
03/06/03	11:48:00	803.588867	2403.07593	984.888123	0	323.363434	554.751282	305.725067	916.84729	354.580658	397.681641	353.330078	228.820786	537.020996	386.128723	0
03/06/03	11:49:00	803.588867	2410.40039	998.014832	0	323.363434	554.751282	305.725067	916.84729	354.580658	397.681641	353.330078	228.820786	537.020996	386.128723	0
03/06/03	11:50:00	803.588867	2409.48462	991.501526	0	323.363434	554.751282	305.725067	915.293152	354.580658	397.681641	353.330078	228.820786	537.020996	386.128723	0
03/06/03	11:51:00	803.588867	2409.48462	978.443604	0	323.363434	554.751282	305.725067	915.293152	354.580658	397.681641	353.330078	228.820786	537.020996	386.128723	0
03/06/03	11:52:00	803.588867	2413.14697	983.888733	0	331.493286	554.751282	305.725067	915.293152	354.580658	397.681641	353.330078	228.820786	537.020996	386.128723	0
03/06/03	11:53:00	803.588867	2416.80908	996.925354	0	331.493286	554.751282	305.725067	915.293152	354.580658	397.681641	353.330078	228.820786	537.020996	386.128723	0
03/06/03	11:54:00	803.588867	2416.80908	992.001221	0	331.493286	554.751282	305.725067	915.293152	354.580658	397.681641	353.330078	228.820786	537.020996	386.128723	0
03/06/03	11:55:00	803.588867	2420.47119	978.943237	0	331.493286	554.751282	305.725067	915.293152	354.580658	397.681641	353.330078	228.820786	537.020996	386.128723	0
03/06/03	11:56:00	803.588867	2420.47119	982.198975	0	331.493286	554.751282	305.725067	916.880798	354.580658	397.681641	353.330078	218.749985	537.020996	386.128723	0
03/06/03	11:57:00	803.588867	2416.80908	995.268982	0	331.493286	554.751282	305.725067	916.880798	354.580658	397.681641	353.330078	218.749985	537.020996	386.128723	0
03/06/03	11:58:00	803.588867	2416.80908	990.356079	0	331.493286	554.751282	305.725067	916.880798	354.580658	391.415863	353.330078	218.749985	537.020996	386.128723	0
03/06/03	11:59:00	803.588867	2416.80908	976.731567	0	331.493286	554.751282	305.725067	916.880798	354.580658	391.415863	353.330078	218.749985	537.020996	386.128723	0
03/06/03	12:00:00	803.588867	2413.14697	981.62085	0	331.493286	554.751282	305.725067	916.880798	354.580658	391.415863	353.330078	218.749985	537.020996	386.128723	0
03/06/03	12:01:00	803.588867	2413.14697	993.045471	0	331.493286	554.751282	305.725067	916.880798	354.580658	391.415863	353.330078	218.749985	537.020996	386.128723	0

DATE	TIME	AETE055 BFBP Discharge Hdr Temp DEG F	AFPY044A DA Pegging Stm Valve PCT	ASFI006 Caulkins LP Stm Flow Output KPPH	ASFI016 Caulkins HP Stm Flow Output KPPH	MAJI002 Unit Megavars MVAR	MAJI004 Unit Megawatts MW	ADPT003C Absolute Cond Vac Calculated IN HGA	DALT004A Cooling Twr Basin Level IN	DAFI027 Cooling Twr Blow-Down Flow GPM	EAFI034 Cooling Twr Blow-Down SDA GPM	DATE014A Water Box Inlet A Temp DEG F	DATE014B Water Box Inlet B Temp DEG F	DATE016A Water Box Outlet A Temp DEG F	DATE016B Water Box Outlet B Temp DEG F	ABFI018 Main Steam Flow KPPH
03/06/03	11:01:00	244.65509	0	111.353653	15.8080568	-2.0141532	201.99585	2.06237793	59.6484337	0	badbad	81.9759293	80.547821	94.042778	95.0198975	1360.83435
03/06/03	11:02:00	244.65509	0	111.353653	15.8080568	-2.0141532	201.99585	2.06237793	59.6484337	0	badbad	80.5477905	81.9758987	94.7648239	95.0198975	1360.83435
03/06/03	11:03:00	244.65509	0	113.384666	15.8080568	-2.0141532	201.99585	2.06237793	59.6484337	0	badbad	81.9611893	81.9464798	94.7502136	95.0198975	1360.83435
03/06/03	11:04:00	244.65509	0	115.605476	16.2738037	-2.0141532	201.99585	2.06237793	59.6484337	0	badbad	81.9317322	80.5035782	94.7210159	95.0198975	1360.83435
03/06/03	11:05:00	244.65509	0	117.618042	16.2738037	-2.0141532	201.99585	2.06237793	59.6484337	0	badbad	80.4593964	81.8875385	94.7210159	95.0198975	1360.83435
03/06/03	11:06:00	244.65509	0	112.996933	15.8573904	-2.0141532	201.99585	2.06237793	59.6484337	0	badbad	80.4446335	81.8728409	94.7210159	95.0198975	1360.83435
03/06/03	11:07:00	244.65509	0	112.996933	16.285183	8.05664539	201.99585	2.06237793	59.6484337	0	322.169739	81.8433609	81.8433609	94.7210159	95.0198975	1360.83435
03/06/03	11:08:00	244.65509	0	110.936089	15.726469	8.05664539	201.99585	2.06237793	59.6484337	0	305.487274	80.3856583	80.3856583	94.7210159	95.0198975	1360.83435
03/06/03	11:09:00	244.65509	0	110.936089	15.726469	8.05664539	201.99585	2.06237793	59.6484337	0	292.215118	81.7991562	81.7991562	94.7210159	95.0198975	1360.83435
03/06/03	11:10:00	244.65509	0	110.936089	15.3714075	8.05664539	201.99585	2.06237793	59.6484337	0	282.447144	81.7697144	81.7697144	94.7210159	95.0198975	1360.83435
03/06/03	11:11:00	244.65509	0	112.943924	15.3714075	8.05664539	201.99585	2.06237793	59.6484337	0	272.61554	81.7549973	80.3266678	94.7210159	95.0198975	1360.83435
03/06/03	11:12:00	244.65509	0	112.943924	15.8304243	8.05664539	201.99585	2.06237793	59.6484337	0	259.227142	81.7402725	80.2971878	94.7210159	95.0198975	1360.83435
03/06/03	11:13:00	244.65509	0	112.943924	15.8304243	-2.3193359	201.99585	2.06237793	59.6484337	0	252.669418	81.7107773	80.2971878	94.7210159	95.0198975	1360.83435
03/06/03	11:14:00	244.65509	0	115.111206	15.3769112	-2.3193359	201.99585	2.06237793	59.6484337	0	246	81.681366	81.681366	94.7210159	95.0198975	1360.83435
03/06/03	11:15:00	244.65509	0	115.111206	15.3769112	-2.3193359	207.183838	2.06237793	59.6484337	0	236.239243	81.6665955	81.6666412	94.7210159	95.0198975	1360.83435
03/06/03	11:16:00	244.65509	0	115.111206	15.3769112	-2.3193359	207.183838	2.06237793	59.6484337	0	226.333084	81.6519089	81.6666412	94.7210159	95.0198975	1360.83435
03/06/03	11:17:00	244.65509	0	113.04512	15.8443966	-2.3193359	207.183838	2.06237793	59.6484337	0	216.33403	81.6224518	81.6224518	94.7210159	95.0198975	1360.83435
03/06/03	11:18:00	244.65509	0	113.04512	15.4566021	-2.3193359	207.183838	2.06237793	59.6484337	0	203.160202	81.6224518	81.6224518	94.7210159	95.0198975	1360.83435
03/06/03	11:19:00	244.65509	0	113.04512	15.5296841	-2.3193359	207.183838	2.06237793	59.6484337	0	196.639969	81.6224518	81.57827	94.7210159	95.0198975	1360.83435
03/06/03	11:20:00	244.65509	0	110.929962	15.5296841	-2.3193359	207.183838	2.06237793	59.6484337	0	196.639969	81.6224518	81.5782089	94.7210159	95.0198975	1360.83435
03/06/03	11:21:00	244.65509	0	110.929962	15.5296841	-2.3193359	207.183838	2.06237793	59.6484337	0	199.887527	81.6224518	80.1350098	94.7210159	95.0198975	1360.83435
03/06/03	11:22:00	244.65509	0	110.929962	15.7705803	-2.3193359	207.183838	2.06237793	59.6484337	0	213.043625	81.6224518	81.56353	94.7210159	95.0198975	1360.83435
03/06/03	11:23:00	244.65509	0	117.629623	15.2926407	-2.3193359	207.183838	2.06237793	59.6484337	0	229.978699	81.6224518	80.1202621	94.7210159	95.0198975	1360.83435
03/06/03	11:24:00	244.65509	0	117.629623	15.5125856	-2.3193359	207.183838	2.06237793	59.6484337	0	243.693207	81.6224518	81.5340652	94.7210159	95.0198975	1360.83435
03/06/03	11:25:00	244.65509	0	117.629623	16.0928993	-2.3193359	207.183838	2.06237793	59.6484337	0	253.537125	81.5193176	80.0760727	94.7210159	95.0198975	1360.83435
03/06/03	11:26:00	244.65509	0	113.190079	15.5969381	-2.3193359	207.183838	2.06237793	59.6484337	0	266.624237	81.5193176	81.475174	94.7210159	95.0198975	1360.83435
03/06/03	11:27:00	244.65509	0	113.190079	15.5969381	-2.3193359	207.183838	2.06237793	59.6484337	0	276.329346	81.5193176	80.0465698	94.7210159	95.0198975	1360.83435
03/06/03	11:28:00	244.65509	0	113.190079	15.5969381	-2.3193359	207.183838	2.06237793	59.6484337	0	282.83551	81.5193176	81.475174	94.7210159	95.0198975	1360.83435
03/06/03	11:29:00	244.65509	0	111.176277	15.5969381	-2.3193359	207.183838	2.06237793	59.6484337	0	286.087708	81.5193176	81.4604416	94.7210159	95.0198975	1360.83435
03/06/03	11:30:00	244.65509	0	111.176277	15.4182806	-2.3193359	207.183838	2.06237793	59.6484337	0	286.087708	81.5193176	80.0023651	94.7210159	95.0198975	1360.83435
03/06/03	11:31:00	244.65509	0	113.295959	15.8509731	-2.3193359	207.183838	2.06237793	59.6484337	0	279.545319	81.5193176	81.431015	94.7210159	95.0198975	1360.83435
03/06/03	11:32:00	244.65509	0	113.295959	15.4494123	-2.3193359	207.183838	2.06237793	59.6484337	0	272.845551	81.5193176	81.431015	94.7210159	95.0198975	1360.83435
03/06/03	11:33:00	244.65509	0	113.295959	15.4494123	-2.3193359	207.183838	2.06237793	59.6484337	0	263.130676	81.5193176	81.3868561	94.7210159	95.0198975	1360.83435
03/06/03	11:34:00	244.65509	0	115.492393	15.8537264	-2.3193359	207.183838	2.06237793	59.6484337	0	263.130676	81.5193176	81.3868561	94.7210159	95.0198975	1360.83435
03/06/03	11:35:00	244.65509	0	115.492393	15.8241959	-2.3193359	207.183838	2.06237793	59.6484337	0	263.130676	81.5193176	81.3868561	94.7210159	95.0198975	1360.83435
03/06/03	11:36:00	244.65509	0	110.868057	15.4058142	-2.3193359	207.183838	2.06237793	59.6484337	0	263.130676	81.5193176	81.3868561	94.7210159	95.0198975	1360.83435
03/06/03	11:37:00	244.65509	0	110.868057	15.4058142	-2.3193359	207.183838	2.06237793	59.6484337	0	266.388855	81.5193176	81.3868561	94.7210159	95.0198975	1360.83435
03/06/03	11:38:00	244.65509	0	110.868057	16.2649193	-2.3193359	207.183838	2.06237793	59.6484337	0	269.66568	81.5193176	79.8992462	94.7210159	95.0198975	1360.83435
03/06/03	11:39:00	244.65509	0	110.868057	15.4530497	-2.3193359	207.183838	2.06237793	59.6484337	0	272.903015	81.5193176	81.3280029	94.7210159	95.0198975	1360.83435
03/06/03	11:40:00	244.65509	0	108.768845	15.5014429	-2.3193359	207.183838	2.06237793	59.6484337	0	272.903015	81.3280029	79.884491	94.7210159	95.0198975	1360.83435
03/06/03	11:41:00	244.65509	0	108.768845	15.1811066	-2.3193359	207.183838	2.06237793	59.6484337	0	276.159027	81.3280029	81.2985229	94.7210159	95.0198975	1360.83435
03/06/03	11:42:00	244.65509	0	108.768845	15.8839674	-2.3193359	207.183838	2.06237793	59.6484337	0	276.159027	81.3280029	81.2690964	94.7210159	95.0198975	1360.83435
03/06/03	11:43:00	244.65509	0	108.768845	15.8839674	-2.3193359	207.183838	2.06237793	59.6484337	0	276.159027	81.3280029	81.2690964	94.7210159	95.0198975	1360.83435
03/06/03	11:44:00	244.65509	0	108.768845	15.4580622	-2.3193359	207.183838	2.06237793	59.6484337	0	269.607513	81.3280029	81.2690964	94.7210159	95.0198975	1360.83435
03/06/03	11:45:00	244.65509	0	106.443062	15.4580622	-2.3193359	207.183838	2.06237793	59.6484337	0	266.388855	81.4607036	81.2690964	94.7210159	95.0198975	1360.83435
03/06/03	11:46:00	244.65509	0	106.443062	15.4580622	-2.3193359	207.183838	2.06237793	59.6484337	0	266.388855	80.120575	80.1942978	94.7210159	95.0198975	1360.83435
03/06/03	11:47:00	244.65509	0	106.443062	15.8619375	-2.3193359	207.183838	2.06237793	59.6484337	0	266.388855	81.0707245	81.7846985	94.5023499	95.0198975	1360.83435
03/06/03	11:48:00	244.65509	0	104.351662	15.50774	-2.3193359	207.183838	2.06237793	59.6484337	0	272.903015	81.1443024	80.4300156	94.5023499	95.0198975	1360.83435
03/06/03	11:49:00	244.65509	0	104.351662	15.50774	-2.3193359	207.183838	2.06237793	59.6484337	0	279.489227	79.6626251	80.4300156	94.5023499	94.7356339	1360.83435
03/06/03	11:50:00	244.65509	0	104.351662	15.50774	-2.3193359	207.183838	2.06237793	59.6484337	0	279.489227	79.8920898	80.4300156	94.5023499	94.7356339	1360.83435
03/06/03	11:51:00	244.65509	0	104.351662	15.960763	-2.3193359	207.183838	2.06237793	59.6484337	0	276.272583	81.3355103	80.4300156	94.5023499	94.7356339	1360.83435
03/06/03	11:52:00	244.65509	0	104.351662	15.5446033	-2.3193359	207.183838	2.06237793	59.6484337	0	276.272583	81.2913589	80.4300156	94.5023499	94.7356339	1360.83435
03/06/03	11:53:00	244.65509	0	104.351662	15.5446033	-2.3193359	207.183838	2.06237793	59.6484337	0	276.272583	81.2913589	80.4300156	94.5023499	93.3347473	1360.83435
03/06/03	11:54:00	244.65509	0	104.351662	15.5446033	-2.3193359	207.183838	2.06237793	59.6484337	0	269.66568	81.2029953	80.4300156	94.5023499	94.7355347	1360.83435
03/06/03	11:55:00	244.65509	0	108.792175	15.8014965	-2.3193359	207.183838	2.06237793	59.6484337	0	263.130676	81.1882782	80.4300156	94.5023499	94.7355347	1360.83435
03/06/03	11:56:00	244.65509	0	110.974655	15.3114567	-2.3193359	207.183838	2.06237793	59.6484337	0	256.673126	81.1587906	80.4300156	94.5023499	94.7355347	1360.83435
03/06/03	11:57:00	244.65509	0	105.920746	15.3114567	-2.3193359	207.183838	2.06237793	59.6484337	0	253.413345	81.1587906	80.4300156	94.5023499	94.7355347	1360.83435
03/06/03	11:58:00	248.992325	0	105.920746	15.34723	-2.3193359	207.183838	2.06237793	59.6484337	0	246.636932	79.6561584	80.4300156	94.5023499	94.7355347	1360.83435
03/06/03	11:59:00	248.992325	0	105.920746	15.34723	-2.3193359	207.183838	2.06237793	59.6484337	0	233.09642	81.0851135	80.4300156	94.5023499	94.7355347	1360.83435
03/06/03	12:00:00	248.992325	0	105.920746	15.614666	-2.3193359	211.914063	2.36450195	59.6484337	0	219.646408	81.0851135	80.4300156	94.5023499	94.7355347	1360.83435
03/06/03	12:01:00	248.992325	0	103.827164	15.614666	-2.3193359	211.914063	2.36450195	59.6484337	0	213.043625	81.0851135	80.4300156	94.5023499	94.7355347	1360.83435

DATE	TIME	MBEL100 Excitation Losses KW	BATI013 AH Gas Outlet Temp DEG F	BAAI046 Excess Oxygen PCT	RMAT500 Relative Humidity PCT	BATI011 AH Air Inlet Temp DEG F	JCFT152 Coal Fdr A Flow Rate KPPH	JCFT252 Coal Fdr B Flow Rate KPPH	JCFT352 Coal Fdr C Flow Rate KPPH	JCFT452 Coal Fdr D Flow Rate KPPH	NAET102 13.8 Kv NAA01 Aux Scr Volts VOLTS	NAET202 13.8 Kv NAAO2 Aux Scr Volts VOLTS	NAIT101 13.8 Kv NAAO1 Aux Scr Current AMPS	NAIT201 13.8 Kv NAA02 Aux Scr Current AMPS	MAII006A Generator Arm Current Phase A KA	MAII006B Generator Arm Current Phase B KA
03/06/03	11:01:00	567.638977	249.973022	4.07090187	42.9931602	107.465561	62.3986778	0.02685483	61.5258751	28.8964825	14039.4287	14231.6885	0.29296178	-0.8056613	4.79882813	4.9355464
03/06/03	11:02:00	567.638977	249.973022	4.05411243	42.9931602	107.465561	62.835083	0.02685483	63.9428711	29.5007305	14039.4287	14231.6885	0.29296178	-0.8056613	4.79882813	4.9355464
03/06/03	11:03:00	567.638977	249.973022	4.30451965	42.9931602	107.465561	62.1301231	0.02685483	61.4251709	29.7357159	14039.4287	14231.6885	0.29296178	-0.8056613	4.79882813	4.9355464
03/06/03	11:04:00	567.638977	249.973022	4.30451965	38.3850098	107.465561	64.2785645	0.02685483	64.3456955	30.0714092	14039.4287	14231.6885	0.29296178	-0.8056613	4.79882813	4.9355464
03/06/03	11:05:00	567.638977	249.973022	4.05091047	36.0656738	107.465561	61.7608643	0.02685483	59.8809776	30.0714092	14039.4287	14231.6885	0.29296178	-0.8056613	4.79882813	4.9355464
03/06/03	11:06:00	567.638977	249.973022	4.05091047	38.3850098	107.465561	62.6000977	0.02685483	62.8686523	29.93713	14039.4287	14231.6885	0.29296178	-0.8056613	4.79882813	4.9355464
03/06/03	11:07:00	567.638977	249.973022	4.05091047	35.7910156	107.465561	62.230835	0.02685483	62.9693565	29.4335899	14039.4287	14231.6885	0.29296178	-0.8056613	4.79882813	4.9355464
03/06/03	11:08:00	567.638977	249.973022	4.05091047	35.852047	107.465561	60.3509521	0.02685483	58.5046349	27.855835	14039.4287	14231.6885	0.29296178	-0.8056613	4.79882813	4.9355464
03/06/03	11:09:00	567.638977	249.973022	4.31156397	35.852047	107.465561	61.6937256	0.02685483	61.5594444	29.6685753	14039.4287	14231.6885	0.29296178	-0.8056613	4.79882813	4.9355464
03/06/03	11:10:00	567.638977	249.973022	4.05484581	35.852047	107.465561	60.9216309	0.02685483	62.2644043	30.1049805	14039.4287	14231.6885	0.29296178	-0.8056613	4.79882813	4.9355464
03/06/03	11:11:00	567.638977	249.973022	4.05484581	35.8215332	107.465561	63.7414551	0.02685483	64.6478195	30.0378399	14039.4287	14231.6885	0.29296178	-0.8056613	4.79882813	4.9355464
03/06/03	11:12:00	567.638977	249.973022	4.06109715	36.8591309	107.465561	57.9675255	0.02685483	57.6318321	32.2534142	14039.4287	14231.6885	0.29296178	-0.8056613	4.79882813	4.9355464
03/06/03	11:13:00	567.638977	249.973022	4.3209734	36.8591309	107.465561	60.5523682	0.02685483	60.216671	29.7021446	14039.4287	14231.6885	0.29296178	-0.8056613	4.79882813	4.9355464
03/06/03	11:14:00	567.638977	249.973022	4.07071686	30.8776836	107.465561	62.9022217	0.02685483	63.0029259	29.6685753	14039.4287	14231.6885	0.29296178	-0.8056613	4.79882813	4.9355464
03/06/03	11:15:00	567.638977	249.973022	4.07071686	34.3261681	107.465561	60.2838135	0.02685483	60.216671	29.5678711	14039.4287	14231.6885	0.29296178	-0.8056613	4.79882813	4.9355464
03/06/03	11:16:00	567.638977	249.973022	4.07071686	32.0678673	107.465561	57.7996826	0.02685483	56.7254639	29.5678711	14039.4287	14231.6885	0.29296178	-0.8056613	4.79882813	4.9355464
03/06/03	11:17:00	567.638977	249.973022	4.3218689	32.0678673	107.465561	61.1901855	0.02685483	58.7731895	29.6350117	14039.4287	14231.6885	0.29296178	-0.8056613	4.79882813	4.9355464
03/06/03	11:18:00	567.638977	249.973022	4.3218689	25.6286621	107.465561	64.4799805	0.02685483	63.9428711	30.2728233	14039.4287	14231.6885	0.29296178	-0.8056613	4.79882813	4.9355464
03/06/03	11:19:00	567.638977	249.973022	4.06483603	25.6286621	107.465561	66.1920166	0.02685483	66.3262863	30.172121	14039.4287	14231.6885	0.29296178	-0.8056613	4.79882813	4.9355464
03/06/03	11:20:00	567.638977	256.127533	4.06483603	27.8869629	107.465561	63.7078857	0.02685483	63.4393311	30.172121	14039.4287	14231.6885	0.29296178	-0.8056613	4.79882813	4.9355464
03/06/03	11:21:00	567.638977	256.127533	4.06483603	31.3659649	107.465561	68.4075928	0.02685483	71.3952637	29.9706993	14039.4287	14231.6885	0.29296178	-0.8056613	4.79882813	4.9355464
03/06/03	11:22:00	567.638977	256.127533	4.06483603	33.4411621	107.465561	65.7556076	0.02685483	65.1177979	30.2728233	14039.4287	14231.6885	0.29296178	-0.8056613	4.79882813	4.9355464
03/06/03	11:23:00	567.638977	256.127533	3.80983615	32.3425255	107.465561	68.0718994	0.02685483	68.0047531	27.2180157	14039.4287	14231.6885	0.29296178	-0.8056613	4.79882813	4.9355464
03/06/03	11:24:00	567.638977	256.127533	4.06440735	32.6171837	107.465561	71.8652267	0.02685483	71.6302414	30.2728233	14039.4287	14231.6885	0.29296178	-0.8056613	4.79882813	4.9355464
03/06/03	11:25:00	567.638977	256.127533	3.80791664	29.4433594	107.465561	63.2043419	0.02685483	63.4728966	29.5343018	14039.4287	14231.6885	0.29296178	-0.8056613	4.79882813	4.9355464
03/06/03	11:26:00	567.638977	256.127533	4.06672382	28.3447247	107.465561	65.4870529	0.02685483	65.0170898	29.9035664	14039.4287	14231.6885	0.29296178	-0.8056613	4.79882813	4.9355464
03/06/03	11:27:00	567.638977	256.127533	4.06672382	28.3447247	107.465561	69.8846436	0.02685483	70.0860596	33.3947716	14039.4287	14231.6885	0.29296178	-0.8056613	4.79882813	4.9355464
03/06/03	11:28:00	567.638977	256.127533	3.80576444	25.6896935	107.465561	61.5930138	0.02685483	63.0029259	30.3063946	14039.4287	14231.6885	0.29296178	-0.8056613	4.79882813	4.9355464
03/06/03	11:29:00	567.638977	256.127533	4.0662117	24.3774414	107.465561	63.6071739	0.02685483	63.8085899	29.5678711	14039.4287	14231.6885	0.29296178	-0.8056613	4.79882813	4.9355464
03/06/03	11:30:00	567.638977	256.127533	4.31707716	28.0090294	107.465561	65.4199219	0.02685483	65.9570313	30.1049805	14039.4287	14231.6885	0.29296178	-0.8056613	4.79882813	4.9355464
03/06/03	11:31:00	567.638977	256.127533	4.31707716	30.0231895	107.465561	65.4534836	0.02685483	65.990593	28.3593731	14039.4287	14231.6885	0.29296178	-0.8056613	4.79882813	4.9355464
03/06/03	11:32:00	567.638977	256.127533	4.06677532	33.3801231	107.465561	64.7149658	0.02685483	64.6813965	29.1986065	14039.4287	14231.6885	0.29296178	-0.8056613	4.79882813	4.9355464
03/06/03	11:33:00	567.638977	256.127533	4.06677532	35.852047	107.465561	59.3774376	0.02685483	61.2573204	30.0378399	14039.4287	14231.6885	0.29296178	-0.8056613	4.79882813	4.9355464
03/06/03	11:34:00	567.638977	256.127533	4.32050514	33.3496056	107.465561	59.9816895	0.02685483	59.6795616	29.4671612	14039.4287	14231.6885	0.29296178	-0.8056613	4.79882813	4.9355464
03/06/03	11:35:00	567.638977	256.127533	4.05803013	27.3986816	107.465561	64.4799805	0.02685483	64.1442871	29.4671612	14039.4287	14231.6885	0.29296178	-0.8056613	4.79882813	4.9355464
03/06/03	11:36:00	567.638977	256.127533	4.05803013	24.926754	107.465561	59.2431641	0.02685483	60.115963	29.4335899	14039.4287	14231.6885	0.29296178	-0.8056613	4.79882813	4.9355464
03/06/03	11:37:00	567.638977	256.127533	4.05803013	28.6193848	107.465561	57.7996826	0.02685483	56.9604492	29.7692852	14039.4287	14231.6885	0.29296178	-0.8056613	4.79882813	4.9355464
03/06/03	11:38:00	567.638977	256.127533	4.31565809	25.3540039	107.465561	56.9940186	0.02685483	57.1282921	29.0307617	14039.4287	14231.6885	0.29296178	-0.8056613	4.79882813	4.9355464
03/06/03	11:39:00	567.638977	256.127533	4.04245901	25.3540039	107.465561	58.0682373	0.02685483	58.135376	28.6279278	14039.4287	14231.6885	0.29296178	-0.8056613	4.79882813	4.9355464
03/06/03	11:40:00	567.638977	256.127533	4.04245901	25.3540039	107.465561	64.6478195	0.02685483	62.835083	29.9035664	14039.4287	14231.6885	0.29296178	-0.8056613	4.79882813	5.09667921
03/06/03	11:41:00	567.638977	256.127533	4.04245901	25.3540039	107.465561	63.5400352	0.02685483	64.2449951	29.4671612	14039.4287	14231.6885	0.29296178	-0.8056613	4.79882813	5.09667921
03/06/03	11:42:00	567.638977	256.127533	4.5800004	26.4526329	107.465561	64.9163742	0.02685483	64.4128418	32.7569542	14039.4287	14231.6885	0.29296178	-0.8056613	4.79882813	5.09667921
03/06/03	11:43:00	567.638977	256.127533	4.06260586	25.5065899	107.465561	67.1319504	0.02685483	66.8969727	29.7021446	14039.4287	14231.6885	0.29296178	-0.8056613	4.79882813	5.09667921
03/06/03	11:44:00	567.638977	256.127533	4.06260586	22.0886211	107.465561	67.9040527	0.02685483	67.333374	30.172121	14039.4287	14231.6885	0.29296178	-0.8056613	4.79882813	5.09667921
03/06/03	11:45:00	567.638977	256.127533	4.06260586	15.9240723	107.465561	64.5471191	0.02685483	63.7414551	29.9706993	14039.4287	14231.6885	0.29296178	-0.8056613	4.79882813	5.09667921
03/06/03	11:46:00	567.638977	256.127533	4.31648493	16.9921856	107.465561	68.7768555	0.02685483	66.9976807	29.8699951	14039.4287	14231.6885	0.29296178	-0.8056613	4.79882813	5.09667921
03/06/03	11:47:00	567.638977	256.127533	4.05626249	18.1823711	107.465561	71.6302414	0.02685483	74.3493652	29.4335899	14039.4287	14231.6885	0.29296178	-0.8056613	4.79882813	5.09667921
03/06/03	11:48:00	567.638977	256.127533	3.80352068	19.342041	107.465561	67.8369141	0.02685483	68.5418625	29.4671612	14039.4287	14231.6885	0.29296178	-0.8056613	4.79882813	5.09667921
03/06/03	11:49:00	567.638977	256.127533	3.80352068	22.5463867	107.465561	59.7467041	0.02685483	59.2431641	29.7692852	14039.4287	14231.6885	0.29296178	-0.8056613	4.79882813	5.09667921
03/06/03	11:50:00	567.638977	256.127533	4.32037783	22.5158691	107.465561	62.331543	0.02685483	63.137207	29.7692852	14039.4287	14231.6885	0.29296178	-0.8056613	4.79882813	5.09667921
03/06/03	11:51:00	567.638977	256.127533	4.06438017	19.0979004	107.465561	67.0983887	0.02685483	66.4605713	30.2728233	14039.4287	14231.6885	0.29296178	-0.8056613	4.79882813	5.09667921
03/06/03	11:52:00	567.638977	256.127533	3.79661417	19.0979004	107.465561	60.518795	0.02685483	61.0894737	29.5343018	14039.4287	14231.6885	0.29296178	-0.8056613	4.79882813	5.09667921
03/06/03	11:53:00	567.638977	256.127533	4.06558752	14.0014639	107.465561	58.4039307	0.02685483	59.8138428	30.0378399	14039.4287	14231.6885	0.29296178	-0.8056613	4.79882813	5.09667921
03/06/03	11:54:00	567.638977	256.127533	4.33192444	11.9873047	107.465561	63.2043419	0.02685483	62.3651085	30.0378399	14039.4287	14231.6885	0.29296178	-0.8056613	4.79882813	5.09667921
03/06/03	11:55:00	567.638977	256.127533	4.0770812	15.1611328	107.465561	57.7996826	0.02685483	57.7325401	29.5007305	14039.4287	14231.6885	0.29296178	-0.8056613	4.79882813	5.09667921
03/06/03	11:56:00	567.638977	256.127533	3.81637406	17.3889141	107.465561	58.6724854	0.02685483	58.2025108	29.9035664	14039.4287	14231.6885	0.29296178	-0.8056613	4.79882813	5.09667921
03/06/03	11:57:00	567.638977	256.127533	4.08823586	21.9360352	107.465561	58.8067589	0.02685483	59.4110069	27.3187256	14039.4287	14231.6885	0.29296178	-1.1718806	4.79882813	5.09667921
03/06/03	11:58:00	567.638977	256.127533	4.338624	23.9501915	107.465561	62.3651085	0.02685483	61.8951378	30.2056904	14039.4287	14231.6885	0.29296178	-1.1718806	4.79882813	5.09667921
03/06/03	11:59:00	567.638977	256.127533	4.07015467	17.4194317	107.465561	62.835083	0.02685483	62.0629883	29.7021446	14039.4287	14231.6885	0.29296178	-1.1718806	4.79882813	5.09667921
03/06/03	12:00:00	567.638977	256.127533	4.07015467	15.1611328	107.465561	66.3262863	0.02685483	65.990593	29.4335899	14039.4287	14231.6885	0.29296178	-1.1718806	5.00390673	5.09667921
03/06/03	12:01:00	567.638977	256.127533	4.07015467	9.91210842	107.465561	62.9693565	0.02685483	63.7414551	29.9706993	14039.4287	14231.6885	0.29296178	-1.1718806	5.00390673	5.09667921

DATE	TIME	MAII006C Generator Arm Current Phase C KA	RMTT500 Ambient Temp DEG F	ADFI001 Cond Xfer Flow Calculated KPPH	ADLT001 Condenser Hotwell Level IN	TSTMFLO Total Stm Flow KPPH	BAFI002 Total Air Flow KPPH	REAI001 CEMS CO2 %	BAAI052 Boiler CO PPM	BATE055 SCR Outlet Temp. DEG F	BATI020 AH Air Outlet Temp. DEG F	AEFY136 Fisher FW Valve Demand %	
03/06/03	11:01:00	4.99414063	84.0942307	194.036453	46.3183594	1361.43738	2167.46021	11.2902822	0	627.872498	549.849731	0 43.1218376	152.84789
03/06/03	11:02:00	4.99414063	84.0942307	195.587296	46.3183594	1361.43738	2167.46021	11.2902822	0	627.872498	549.849731	0 44.1603584	156.305539
03/06/03	11:03:00	4.99414063	84.0942307	194.883896	46.3183594	1361.43738	2167.46021	11.4855957	0	627.872498	549.849731	0 45.2087822	153.317865
03/06/03	11:04:00	4.99414063	84.0942307	195.165573	46.3183594	1361.43738	2168.93286	11.2841797	0	627.872498	549.849731	0 44.1134872	158.722524
03/06/03	11:05:00	4.99414063	84.0942307	197.613022	46.3183594	1361.43738	2167.97729	11.4855957	0	627.872498	549.849731	0 42.947506	151.740106
03/06/03	11:06:00	4.99414063	84.0942307	199.618164	46.3183594	1361.43738	2167.97729	11.2841797	0	627.872498	549.849731	0 43.9745064	155.432735
03/06/03	11:07:00	4.99414063	84.0942307	194.460632	46.3183594	1361.43738	2167.97729	11.4916983	0	627.872498	549.849731	0 44.9814911	154.660636
03/06/03	11:08:00	4.99414063	84.0942307	193.398422	46.3183594	1361.43738	2133.146	11.4855957	0	627.872498	549.849731	0 43.9655914	146.738277
03/06/03	11:09:00	4.99414063	84.0942307	191.973007	46.3183594	1361.43738	2168.25952	11.4855957	0	627.872498	549.849731	0 43.9655914	152.9486
03/06/03	11:10:00	4.99414063	84.0942307	193.682251	46.3183594	1361.43738	2131.64209	11.4855957	0	627.872498	549.849731	0 43.9655914	153.31787
03/06/03	11:11:00	4.99414063	84.0942307	194.036453	46.3183594	1361.43738	2166.40234	11.2841797	0	627.872498	549.849731	0 44.9810371	158.453969
03/06/03	11:12:00	4.99414063	84.0942307	198.998032	46.3183594	1361.43738	2166.40234	11.4916983	0	627.872498	549.849731	0 44.9810371	147.879627
03/06/03	11:13:00	4.99414063	84.0942307	194.389999	46.3183594	1361.43738	2166.40234	11.4916983	0	627.872498	549.849731	0 43.9257851	150.498039
03/06/03	11:14:00	4.99414063	84.0942307	197.125961	46.3183594	1361.43738	2168.82788	11.4916983	0	627.872498	549.849731	0 43.9257851	155.600578
03/06/03	11:15:00	4.99414063	84.0942307	196.567841	46.3183594	1361.43738	2168.82788	11.2841797	0	636.923218	549.849731	0 45.0150948	150.09521
03/06/03	11:16:00	4.99414063	84.0942307	195.095184	46.3183594	1361.43738	2171.57813	11.4916983	0	636.923218	549.849731	0 45.0150948	144.119872
03/06/03	11:17:00	4.99414063	84.0942307	192.758286	46.3183594	1361.43738	2135.37231	11.4916983	0	636.923218	549.849731	0 43.9377098	149.625242
03/06/03	11:18:00	4.99414063	84.0942307	199.755707	46.3183594	1361.43738	2170.20825	11.2902822	0	636.923218	549.849731	0 43.9377098	158.72253
03/06/03	11:19:00	4.99414063	85.6811523	197.821381	46.3183594	1361.43738	2170.20825	11.2902822	0	636.923218	549.849731	0 44.9550629	162.717279
03/06/03	11:20:00	4.99414063	85.6811523	193.256348	46.801754	1361.43738	2170.20825	11.4916983	0	636.923218	549.849731	0 44.9550629	157.346193
03/06/03	11:21:00	4.99414063	85.6811523	181.833313	46.801754	1361.43738	2133.73682	11.4855957	0	636.923218	549.849731	0 44.9550629	169.800411
03/06/03	11:22:00	4.99414063	85.6811523	189.307693	46.801754	1361.43738	2168.7373	11.4855957	0	636.923218	549.849731	0 43.7310982	161.173084
03/06/03	11:23:00	4.99414063	85.6811523	199.136017	46.801754	1361.43738	2168.7373	11.4855957	0	636.923218	549.849731	0 42.6658287	163.321523
03/06/03	11:24:00	4.99414063	85.6811523	187.997391	46.801754	1361.43738	2127.86938	11.4855957	0	636.923218	549.849731	0 43.6971779	173.795146
03/06/03	11:25:00	4.99414063	85.6811523	187.118744	46.801754	1361.43738	2165.77441	11.4855957	0	636.923218	549.849731	0 42.5757027	156.238395
03/06/03	11:26:00	5.15527344	85.6811523	187.485352	46.801754	1361.43738	2165.77441	11.6870117	0	636.923218	549.849731	0 42.5757027	160.434564
03/06/03	11:27:00	5.15527344	85.6811523	195.517075	46.801754	1361.43738	2165.77441	11.5893555	0	636.923218	549.849731	0 42.5658798	173.39233
03/06/03	11:28:00	5.15527344	85.6811523	195.306244	46.801754	1361.43738	2165.77441	11.5893555	0	636.923218	549.849731	0 42.606884	154.929189
03/06/03	11:29:00	5.15527344	85.6811523	188.726471	46.801754	1361.43738	2167.14478	11.394042	0	636.923218	549.849731	0 43.7176285	157.01049
03/06/03	11:30:00	5.15527344	85.6811523	183.861176	46.801754	1361.43738	2167.14478	11.619873	0	636.923218	549.849731	0 43.7176285	161.508788
03/06/03	11:31:00	5.15527344	85.6811523	195.235916	46.801754	1361.43738	2167.14478	11.595458	0	636.923218	549.849731	0 42.6532021	159.830304
03/06/03	11:32:00	5.15527344	85.6811523	192.116013	46.801754	1361.43738	2167.14478	11.3879385	0	636.923218	549.849731	0 42.6532021	158.621824
03/06/03	11:33:00	5.15527344	85.6811523	195.306244	46.801754	1361.43738	2203.41455	11.3879385	0	636.923218	549.849731	0 43.6940651	150.699453
03/06/03	11:34:00	5.15527344	85.6811523	192.829529	46.801754	1361.43738	2165.75977	11.5893555	0	636.923218	549.849731	0 42.5676994	149.155267
03/06/03	11:35:00	5.15527344	85.6811523	198.790894	46.801754	1361.43738	2163.50293	11.5893555	0	636.923218	549.849731	0 42.5676994	158.118284
03/06/03	11:36:00	5.15527344	85.6811523	195.727692	46.801754	1361.43738	2203.09033	11.394042	0	636.923218	549.849731	0 43.5789337	148.819572
03/06/03	11:37:00	5.15527344	85.6811523	191.256317	46.801754	1361.43738	2167.28223	11.394042	0	636.923218	549.849731	0 44.6259575	144.556272
03/06/03	11:38:00	5.15527344	85.6811523	194.672379	46.801754	1361.43738	2211.62817	11.3879385	0	636.923218	549.849731	0 43.6096573	143.179927
03/06/03	11:39:00	5.15527344	85.6811523	188.362274	46.801754	1361.43738	2175.62256	11.595458	0	636.923218	549.849731	0 42.5902252	144.858396
03/06/03	11:40:00	5.15527344	85.6811523	194.177963	46.801754	1361.43738	2175.62256	11.394042	0	636.923218	549.849731	0 43.6335907	157.413324
03/06/03	11:41:00	5.15527344	85.6811523	192.116013	46.801754	1361.43738	2168.73511	11.3879385	0	636.923218	549.849731	0 44.669178	157.279046
03/06/03	11:42:00	5.15527344	85.6811523	197.334839	46.801754	1361.43738	2168.73511	11.4916983	0	636.923218	549.849731	0 44.6374664	162.113025
03/06/03	11:43:00	5.15527344	85.6811523	199.893158	46.801754	1361.43738	2168.73511	11.4916983	0	636.923218	549.849731	0 43.4026184	163.757922
03/06/03	11:44:00	5.15527344	85.6811523	193.682251	46.801754	1361.43738	2206.65869	11.2841797	0	636.923218	549.849731	0 43.4307365	165.436403
03/06/03	11:45:00	5.15527344	85.6811523	196.497955	46.801754	1361.43738	2169.58594	11.394042	0	636.923218	549.849731	0 43.4307365	158.286128
03/06/03	11:46:00	5.15527344	85.6811523	200.236359	46.801754	1361.43738	2173.54834	11.394042	0	636.923218	549.849731	0 43.4307365	165.671386
03/06/03	11:47:00	5.15527344	85.6811523	198.721802	46.801754	1361.43738	2137.24976	11.5893555	0	636.923218	549.849731	0 42.3884697	175.440051
03/06/03	11:48:00	5.15527344	85.6811523	196.777313	46.801754	1361.43738	2173.24194	11.2902822	0	636.923218	549.849731	0 42.3884697	165.872793
03/06/03	11:49:00	5.15527344	85.6811523	200.373489	46.801754	1361.43738	2173.24194	11.192626	0	636.923218	549.849731	0 43.4185715	148.786008
03/06/03	11:50:00	5.15527344	85.6811523	193.753143	46.801754	1361.43738	2132.40796	11.4916983	0	636.923218	549.849731	0 42.3526726	155.26489
03/06/03	11:51:00	5.15527344	85.6811523	199.755707	46.801754	1361.43738	2170.13745	11.4916983	0	636.923218	549.849731	0 42.3526726	163.858638
03/06/03	11:52:00	5.15527344	85.6811523	198.790894	46.801754	1361.43738	2170.13745	11.2902822	0	636.923218	549.849731	0 43.3750877	151.169425
03/06/03	11:53:00	5.15527344	85.6811523	198.652679	46.801754	1361.43738	2170.13745	11.5466299	0	636.923218	549.849731	0 43.3750877	148.282468
03/06/03	11:54:00	5.15527344	85.6811523	197.265228	46.801754	1361.43738	2170.13745	11.5466299	0	636.923218	549.849731	0 43.2614479	155.634145
03/06/03	11:55:00	5.15527344	85.6811523	197.473984	46.801754	1361.43738	2170.13745	11.583252	0	636.923218	549.849731	0 42.2595139	145.059808
03/06/03	11:56:00	5.15527344	85.6811523	197.543503	46.801754	1361.43738	2170.13745	11.2841797	0	636.923218	549.849731	0 43.2874298	146.805417
03/06/03	11:57:00	5.15527344	85.6811523	192.473114	46.801754	1361.43738	2170.13745	11.2902822	0	636.923218	549.849731	0 44.3221512	145.563346
03/06/03	11:58:00	5.15527344	85.6811523	195.095184	46.801754	1361.43738	2170.13745	11.5893555	0	636.923218	549.849731	0 44.3221512	154.492791
03/06/03	11:59:00	5.15527344	85.6811523	190.968872	46.801754	1361.43738	2170.13745	11.3879385	0	636.923218	549.849731	0 43.2292442	154.627071
03/06/03	12:00:00	5.15527344	85.6811523	193.469421	46.801754	1361.43738	2170.13745	11.1865225	0	636.923218	549.849731	0 43.2292442	161.777324
03/06/03	12:01:00	5.15527344	85.6811523	192.615753	46.801754	1361.43738	2170.13745	11.1804199	0	636.923218	549.849731	0 44.2812881	156.708366

DATE	TIME	MAJI007 Generator Megawatts MW	MAJI008 Generator Megavars MVAR	NAJT101 13.8 kv NAA01 Gen Aux Load MW	NAJT201 13.8 kv NAA02 Gen Aux Load MW	AEFI135 FW Flow Comp. KPPH	AEFI131 SH Spray Flow KPPH	FDFI002 Sootblower Steam Flow KPPH	FDFI022 SCR Sootblower Stm Flow KPPH	AAFY018A Cont. Blowdown Flow PCT	FBFI021 MS to Aux Stm. Flow KPPH	AETE137 Feedwater Temp. DEG F	AAPTOO6 Selected Drum Pressure PSIG	FDPT002 Sootblower Steam Pressure PSIG	FDTT002 Sootblower Steam Temp. DEG F	FDPT022 A.H. Sootblower Stm. Press PSIG
03/06/03	12:02:00	205.96312	4.99876785	14.4451895	8.09142971	1471.23181	67.3702698	0	1.95849788	0	0	397.025635	2476.74561	319.763184	679.992676	380.493164
03/06/03	12:03:00	205.96312	4.99876785	14.4451895	7.76184082	1471.23181	19.2486248	0	1.95849788	0	0	397.025635	2476.74561	319.763184	679.992676	380.493164
03/06/03	12:04:00	205.96312	4.99876785	14.4451895	8.08227539	1471.23181	19.2486248	0	1.95849788	0	0	397.025635	2476.74561	319.763184	679.992676	380.493164
03/06/03	12:05:00	205.96312	4.99876785	14.4451895	7.76184082	1440.3241	41.9514542	0	1.95849788	0	0	397.025635	2476.74561	319.763184	679.992676	380.493164
03/06/03	12:06:00	205.96312	4.99876785	14.4451895	7.76184082	1472.01477	69.2197723	0	1.95849788	0	0	397.025635	2476.74561	319.763184	679.992676	380.493164
03/06/03	12:07:00	205.96312	4.99876785	14.4451895	8.06396484	1439.61426	37.7239571	0	1.95849788	0	0	390.536926	2476.74561	319.763184	679.992676	380.493164
03/06/03	12:08:00	205.96312	4.99876785	14.4451895	7.67028761	1439.61426	20.3129025	0	1.95849788	0	0	390.536926	2476.74561	319.763184	679.992676	380.493164
03/06/03	12:09:00	205.96312	4.99876785	14.4451895	7.67028761	1439.61426	45.3282166	0	1.95849788	0	0	390.536926	2476.74561	319.763184	679.992676	380.493164
03/06/03	12:10:00	205.96312	4.99876785	14.4451895	7.67944336	1439.61426	73.6405258	0	1.95849788	0	0	390.536926	2476.74561	319.763184	679.992676	380.493164
03/06/03	12:11:00	205.96312	4.99876785	14.4451895	7.76184082	1439.61426	38.8240356	0	1.95849788	0	0	390.536926	2476.74561	319.763184	679.992676	380.493164
03/06/03	12:12:00	205.96312	4.99876785	14.4451895	7.51464796	1439.61426	20.3129025	0	1.95849788	0	0	390.536926	2476.74561	319.763184	679.992676	380.493164
03/06/03	12:13:00	205.96312	4.99876785	14.4451895	7.98156738	1471.12927	41.4465866	0	1.95849788	0	0	390.536926	2476.74561	319.763184	679.992676	380.493164
03/06/03	12:14:00	205.96312	4.99876785	14.4451895	8.10974026	1471.12927	71.9048538	0	1.95849788	0	0	390.536926	2476.74561	319.763184	679.992676	380.493164
03/06/03	12:15:00	205.96312	4.99876785	14.4451895	7.75268555	1440.35779	46.2477722	0	1.95849788	0	0	390.536926	2476.74561	319.763184	679.992676	380.493164
03/06/03	12:16:00	211.151108	4.99876785	14.4451895	7.78015184	1440.35779	21.3241291	0	1.95849788	0	0	390.536926	2476.74561	319.763184	679.992676	380.493164
03/06/03	12:17:00	211.151108	4.99876785	14.4451895	7.67028761	1440.35779	40.9355507	0	1.95849788	0	0	390.536926	2476.74561	319.763184	679.992676	380.493164
03/06/03	12:18:00	211.151108	4.99876785	14.4451895	8.09142971	1470.89502	71.6114807	0	1.95849788	0	0	384.381592	2476.74561	319.763184	679.992676	380.493164
03/06/03	12:19:00	211.151108	4.99876785	14.4451895	7.77099657	1440.00073	48.4703484	0	1.95849788	0	0	384.381592	2476.74561	319.763184	679.992676	380.493164
03/06/03	12:20:00	211.151108	4.99876785	14.4451895	7.77099657	1440.00073	20.3129025	0	1.95849788	0	0	384.381592	2476.74561	319.763184	679.992676	380.493164
03/06/03	12:21:00	211.151108	4.99876785	14.4451895	7.77099657	1470.93811	39.8937416	0	1.95849788	0	0	384.381592	2476.74561	319.763184	679.992676	380.493164
03/06/03	12:22:00	211.151108	4.99876785	14.4451895	7.77099657	1470.93811	72.4880219	0	1.95849788	0	0	378.296234	2476.74561	319.763184	679.992676	380.493164
03/06/03	12:23:00	211.151108	4.99876785	14.4451895	7.77099657	1435.39172	58.6861687	0	1.95849788	0	0	378.296234	2476.74561	319.763184	679.992676	380.493164
03/06/03	12:24:00	211.151108	4.99876785	14.4451895	7.77099657	1466.10278	18.1219501	0	1.95849788	0	0	378.296234	2476.74561	319.763184	679.992676	380.493164
03/06/03	12:25:00	211.151108	4.99876785	14.4451895	7.77099657	1466.10278	34.2122498	0	1.95849788	0	0	378.296234	2476.74561	319.763184	679.992676	380.493164
03/06/03	12:26:00	211.151108	4.99876785	14.4451895	7.77099657	1466.10278	74.4932175	0	1.95849788	0	0	378.296234	2476.74561	319.763184	679.992676	380.493164
03/06/03	12:27:00	211.151108	4.99876785	14.4451895	7.91748047	1435.99255	74.4932175	0	1.95849788	0	0	378.296234	2476.74561	319.763184	679.992676	380.493164
03/06/03	12:28:00	211.151108	4.99876785	14.4451895	7.91748047	1435.99255	22.2894325	0	1.95849788	0	0	372.219208	2476.74561	319.763184	679.992676	380.493164
03/06/03	12:29:00	211.151108	4.99876785	14.4451895	7.91748047	1435.99255	18.1219501	0	1.95849788	0	0	372.219208	2476.74561	319.763184	679.992676	380.493164
03/06/03	12:30:00	211.151108	4.99876785	14.4451895	7.70690823	1435.99255	70.4257736	0	1.95849788	0	0	372.219208	2476.74561	319.763184	679.992676	380.493164
03/06/03	12:31:00	211.151108	4.99876785	14.4451895	8.00903416	1435.99255	74.210083	0	1.95849788	0	0	372.219208	2476.74561	319.763184	690.063477	380.493164
03/06/03	12:32:00	216.186508	4.99876785	14.4451895	7.97241163	1435.99255	29.5930882	0	1.95849788	0	0	372.219208	2476.74561	319.763184	690.063477	380.493164
03/06/03	12:33:00	216.186508	4.99876785	14.4451895	7.97241163	1435.99255	0	0	1.95849788	0	0	366.113068	2476.74561	319.763184	690.063477	380.493164
03/06/03	12:34:00	216.186508	4.99876785	14.4451895	7.97241163	1464.31079	69.2197723	0	1.95849788	0	0	366.113068	2476.74561	319.763184	690.063477	380.493164
03/06/03	12:35:00	216.186508	4.99876785	14.4451895	7.67028761	1464.31079	76.9945984	0	1.95849788	0	0	366.113068	2476.74561	319.763184	690.063477	380.493164
03/06/03	12:36:00	216.186508	4.99876785	14.4451895	7.67028761	1433.38745	40.9355507	0	1.95849788	0	0	366.113068	2476.74561	319.763184	690.063477	380.493164
03/06/03	12:37:00	216.186508	4.99876785	14.4451895	7.67028761	1468.02991	18.1219501	0	1.95849788	0	0	366.113068	2476.74561	319.763184	690.063477	380.493164
03/06/03	12:38:00	216.186508	4.99876785	14.4451895	7.97241163	1468.02991	69.2197723	0	1.95849788	0	0	366.113068	2476.74561	319.763184	690.063477	380.493164
03/06/03	12:39:00	216.186508	4.99876785	14.4451895	7.97241163	1437.30579	77.26754	0	1.95849788	0	0	366.113068	2476.74561	319.763184	690.063477	380.493164
03/06/03	12:40:00	216.186508	4.99876785	14.4451895	7.97241163	1404.37781	57.5999374	0	1.95849788	0	0	366.113068	2476.74561	319.763184	690.063477	380.493164
03/06/03	12:41:00	216.186508	4.99876785	14.4451895	7.97241163	1404.37781	20.3129025	0	1.95849788	0	0	366.113068	2476.74561	319.763184	690.063477	380.493164
03/06/03	12:42:00	216.186508	4.99876785	14.4451895	7.97241163	1466.81677	66.7424088	0	1.95849788	0	0	366.113068	2476.74561	319.763184	690.063477	380.493164
03/06/03	12:43:00	216.186508	4.99876785	14.4451895	7.97241163	1436.05688	75.3362503	0	1.95849788	0	0	366.113068	2476.74561	319.763184	690.063477	380.493164
03/06/03	12:44:00	216.186508	4.99876785	14.4451895	7.97241163	1401.177	70.4257736	0	1.95849788	0	0	366.113068	2476.74561	319.763184	690.063477	380.493164
03/06/03	12:45:00	216.186508	4.99876785	14.4451895	7.97241163	1401.177	30.2961292	0	1.95849788	0	0	366.113068	2476.74561	319.763184	690.063477	380.493164
03/06/03	12:46:00	216.186508	4.99876785	14.4451895	7.97241163	1463.11975	43.9128456	0	1.95849788	0	0	366.113068	2476.74561	319.763184	690.063477	380.493164
03/06/03	12:47:00	216.186508	4.99876785	14.4451895	7.97241163	1463.11975	76.4458313	0	1.95849788	0	0	366.113068	2476.74561	319.763184	690.063477	380.493164
03/06/03	12:48:00	216.186508	4.99876785	14.4451895	7.8808589	1399.00256	80.2085419	0	1.95849788	0	0	366.113068	2476.74561	319.763184	700.134277	380.493164
03/06/03	12:49:00	216.186508	4.99876785	14.4451895	7.8808589	1429.43408	43.9128456	0	1.95849788	0	0	366.113068	2476.74561	319.763184	700.134277	380.493164
03/06/03	12:50:00	216.186508	4.99876785	14.4451895	7.8808589	1429.43408	18.1219501	0	1.95849788	0	0	366.113068	2476.74561	319.763184	700.134277	380.493164
03/06/03	12:51:00	216.186508	4.99876785	14.4451895	7.8808589	1460.4873	70.7240753	0	1.95849788	0	0	366.113068	2476.74561	319.763184	700.134277	380.493164
03/06/03	12:52:00	216.186508	4.99876785	14.4451895	7.8808589	1460.4873	74.4932175	0	1.95849788	0	0	366.113068	2476.74561	319.763184	700.134277	380.493164
03/06/03	12:53:00	216.186508	4.99876785	14.4451895	7.8808589	1427.55103	47.1493912	0	1.95849788	0	0	366.113068	2476.74561	319.763184	700.134277	380.493164
03/06/03	12:54:00	216.186508	4.99876785	14.4451895	7.69775438	1427.55103	37.7239571	0	1.95849788	0	0	366.113068	2476.74561	319.763184	700.134277	380.493164
03/06/03	12:55:00	216.186508	4.99876785	14.4451895	8.01818752	1427.55103	67.6820374	0	1.95849788	0	0	366.113068	2476.74561	319.763184	700.134277	380.493164
03/06/03	12:56:00	216.186508	4.99876785	14.4451895	8.01818752	1427.55103	71.6114807	0	1.95849788	0	0	366.113068	2476.74561	319.763184	700.134277	380.493164
03/06/03	12:57:00	216.186508	4.99876785	14.4451895	8.01818752	1427.55103	67.6820374	0	1.95849788	0	0	366.113068	2476.74561	319.763184	700.134277	380.493164
03/06/03	12:58:00	216.186508	4.99876785	14.4451895	8.01818752	1427.55103	44.8614235	0	1.95849788	0	0	366.113068	2476.74561	319.763184	700.134277	380.493164
03/06/03	12:59:00	216.186508	4.99876785	14.4451895	8.01818752	1459.55322	40.4180031	0	1.95849788	0	0	366.113068	2476.74561	319.763184	700.134277	380.493164
03/06/03	13:00:00	216.186508	4.99876785	14.4451895	8.01818752	1459.55322	66.4262314	0	1.95849788	0	0	366.113068	2476.74561	319.763184	700.134277	380.493164
03/06/03	13:01:00	216.186508	4.99876785	14.4451895	7.80761671	1429.29517	74.4932175	0	1.95849788	0	0	366.113068	2476.74561	319.763184	700.134277	380.493164
03/06/03	13:02:00	216.186508	4.99876785	14.4451895	8.05480957	1429.29517	43.9128456	0	1.95849788	0	0	366.113068	2476.74561	319.763184	700.134277	380.493164

DATE	TIME	FDTT022 SCR/AH Sootblower Stm Temp DEG F	ABPIOO7 Turbine Throttle Pressure PSIG	ABTE008 Main Stm Temp DEG F	AEFI111 Reheater Spray Flow KPPH	ABPI010 Cold Reheat Stm Press PSIG	ABTE016 Cold Reheat Temp DEG F	ABPT024 Hot Reheat Pressure PSIG	ABTE022 Hot Reheat Temp DEG F	AETE119 BFP Hdr Discharge Temp DEG F	AETE130 FW Htr #7 Outlet Temp DEG F	AETE035 FW Htr #7 Casc Drain Temp DEG F	AFPT026 Cold Reheat Ext Hdr Press PSIG	AFTE027 Cold Reheat Ext Hdr Temp DEG F	AFTI017 HP Aux Steam Temp DEG F	AFFI017 Spray Flow to HP Aux Steam KPPH
03/06/03	12:02:00	803.588867	2409.48462	991.400391	0	331.493286	554.751282	305.725067	916.880798	354.580658	391.415863	353.330078	218.749985	537.020996	386.128723	0
03/06/03	12:03:00	803.588867	2405.82251	977.764343	0	331.493286	554.751282	305.725067	916.880798	354.580658	391.415863	353.330078	218.749985	537.020996	386.128723	0
03/06/03	12:04:00	803.588867	2402.16064	979.397827	0	331.493286	554.751282	305.725067	916.880798	354.580658	391.415863	353.330078	218.749985	537.020996	386.128723	0
03/06/03	12:05:00	803.588867	2405.82251	992.978027	0	331.493286	554.751282	305.725067	916.880798	354.580658	391.415863	353.330078	218.749985	537.020996	386.128723	0
03/06/03	12:06:00	803.588867	2402.16064	993.511414	0	331.493286	554.751282	305.725067	916.880798	354.580658	391.415863	353.330078	208.679184	537.020996	386.128723	0
03/06/03	12:07:00	803.588867	2402.16064	980.419556	0	331.493286	554.751282	305.725067	916.880798	354.580658	391.415863	353.330078	208.679184	537.020996	386.128723	0
03/06/03	12:08:00	803.588867	2402.16064	978.774902	0	331.493286	554.751282	305.725067	918.356384	354.580658	391.415863	353.330078	208.679184	537.020996	386.128723	0
03/06/03	12:09:00	803.588867	2409.48462	994.555786	0	331.493286	554.751282	305.725067	918.356384	354.580658	391.415863	353.330078	208.679184	537.020996	386.128723	0
03/06/03	12:10:00	803.588867	2413.14697	997.801392	0	331.493286	554.751282	305.725067	919.966492	354.580658	391.415863	353.330078	208.679184	537.020996	386.128723	0
03/06/03	12:11:00	803.588867	2413.14697	979.274353	0	331.493286	554.751282	305.725067	919.966492	354.580658	391.415863	353.330078	208.679184	537.020996	386.128723	0
03/06/03	12:12:00	803.588867	2409.48462	977.618469	0	339.647552	554.751282	315.795868	918.300293	354.580658	391.415863	353.330078	208.679184	537.020996	386.128723	0
03/06/03	12:13:00	803.588867	2413.14697	992.310059	0	339.647552	554.751282	315.795868	918.300293	354.580658	391.415863	353.330078	208.679184	537.020996	386.128723	0
03/06/03	12:14:00	803.588867	2409.48462	997.2005	0	339.647552	554.751282	315.795868	919.921692	354.580658	391.415863	358.705566	208.679184	537.020996	386.128723	0
03/06/03	12:15:00	803.588867	2413.14697	984.118958	0	339.647552	554.751282	315.795868	919.921692	354.580658	391.415863	358.705566	208.679184	537.020996	386.128723	0
03/06/03	12:16:00	803.588867	2413.14697	977.573547	0	339.647552	554.751282	315.795868	919.921692	354.580658	384.967255	358.705566	198.608398	537.020996	386.128723	0
03/06/03	12:17:00	803.588867	2413.14697	991.697937	0	339.647552	554.751282	315.795868	919.921692	354.580658	384.967255	358.705566	198.608398	537.020996	386.128723	0
03/06/03	12:18:00	803.588867	2413.14697	998.244873	0	339.647552	567.030457	315.795868	919.921692	354.580658	384.967255	358.705566	188.537598	537.020996	386.128723	0
03/06/03	12:19:00	803.588867	2416.80908	983.506958	0	339.647552	567.030457	315.795868	919.921692	354.580658	384.967255	358.705566	188.537598	537.020996	386.128723	0
03/06/03	12:20:00	803.588867	2409.48462	975.317078	0	339.647552	567.030457	315.795868	918.72113	354.580658	384.967255	358.705566	188.537598	537.020996	386.128723	0
03/06/03	12:21:00	803.588867	2409.48462	991.641785	0	339.647552	567.030457	315.795868	918.72113	359.659821	384.967255	358.705566	188.537598	537.020996	386.128723	0
03/06/03	12:22:00	803.588867	2413.14697	999.800293	0	339.647552	567.030457	315.795868	918.72113	359.659821	378.883423	358.705566	178.466797	537.020996	386.128723	0
03/06/03	12:23:00	803.588867	2409.48462	986.695679	0	347.826233	567.030457	315.795868	918.72113	359.659821	378.883423	358.705566	178.466797	537.020996	386.128723	0
03/06/03	12:24:00	803.588867	2405.82251	977.983276	0	347.826233	567.030457	325.866669	918.72113	359.659821	378.883423	358.705566	178.466797	537.020996	386.128723	0
03/06/03	12:25:00	803.588867	2405.82251	989.963074	0	347.826233	567.030457	325.866669	918.72113	359.659821	378.883423	358.705566	178.466797	537.020996	386.128723	0
03/06/03	12:26:00	803.588867	2409.48462	1001.37823	0	347.826233	567.030457	325.866669	918.72113	359.659821	378.883423	358.705566	178.466797	537.020996	386.128723	0
03/06/03	12:27:00	803.588867	2414.06226	989.929382	0	347.826233	567.030457	325.866669	918.72113	359.659821	378.883423	358.705566	168.395996	537.020996	386.128723	0
03/06/03	12:28:00	803.588867	2410.40039	976.838257	0	347.826233	567.030457	325.866669	917.520447	359.659821	372.795624	358.705566	158.325195	537.020996	386.128723	0
03/06/03	12:29:00	803.588867	2410.40039	987.172852	0	347.826233	567.030457	325.866669	917.520447	359.659821	372.795624	358.705566	158.325195	537.020996	386.128723	0
03/06/03	12:30:00	803.588867	2417.72437	1002.4115	0	347.826233	567.030457	325.866669	917.520447	359.659821	372.795624	358.705566	158.325195	537.020996	386.128723	0
03/06/03	12:31:00	803.588867	2417.72437	992.596313	0	347.826233	567.030457	325.866669	917.520447	359.659821	372.795624	358.705566	158.325195	537.020996	386.128723	0
03/06/03	12:32:00	803.588867	2414.06226	977.859802	0	347.826233	567.030457	325.866669	915.820496	359.659821	372.795624	358.705566	158.325195	537.020996	386.128723	0
03/06/03	12:33:00	803.588867	2414.06226	984.38269	0	355.98053	567.030457	325.866669	915.820496	359.659821	366.715942	358.705566	148.254364	537.020996	386.128723	0
03/06/03	12:34:00	803.588867	2409.48462	1001.27722	0	355.98053	567.030457	325.866669	915.820496	359.659821	366.715942	358.705566	148.254364	529.083801	386.128723	0
03/06/03	12:35:00	803.588867	2409.48462	994.71875	0	355.98053	567.030457	325.866669	915.820496	359.659821	360.644318	358.705566	148.254364	529.083801	386.128723	0
03/06/03	12:36:00	803.588867	2405.82251	981.104431	0	355.98053	567.030457	325.866669	915.820496	359.659821	360.644318	358.705566	148.254364	529.083801	386.128723	0
03/06/03	12:37:00	803.588867	2405.82251	982.715393	0	355.98053	567.030457	325.866669	915.820496	359.659821	360.644318	358.705566	148.254364	521.099304	386.128723	0
03/06/03	12:38:00	803.588867	2410.40039	999.09845	0	355.98053	567.030457	325.866669	915.820496	359.659821	360.644318	358.705566	148.254364	521.099304	386.128723	0
03/06/03	12:39:00	803.588867	2406.73828	1000.77753	0	355.98053	579.193787	325.866669	917.441833	359.659821	360.644318	358.705566	137.878418	521.099304	386.128723	0
03/06/03	12:40:00	803.588867	2414.06226	985.617859	0	355.98053	579.193787	325.866669	918.6427	359.659821	360.644318	358.705566	137.878418	513.378601	386.128723	0
03/06/03	12:41:00	803.588867	2410.40039	980.762085	0	355.98053	579.193787	325.866669	919.854553	359.659821	360.644318	358.705566	137.878418	513.378601	386.128723	0
03/06/03	12:42:00	803.588867	2410.40039	997.824036	0	355.98053	579.193787	325.866669	921.577087	359.659821	360.644318	358.705566	137.878418	513.378601	386.128723	0
03/06/03	12:43:00	803.588867	2414.97803	1001.19312	0	355.98053	579.193787	325.866669	923.288208	359.659821	360.644318	358.705566	137.878418	513.378601	386.128723	0
03/06/03	12:44:00	803.588867	2411.31592	988.155457	0	355.98053	579.193787	325.866669	923.288208	359.659821	360.644318	358.705566	137.878418	505.840424	386.128723	0
03/06/03	12:45:00	803.588867	2414.97803	983.254517	0	355.98053	579.193787	325.866669	924.488892	359.659821	360.644318	358.705566	137.878418	505.840424	386.128723	0
03/06/03	12:46:00	803.588867	2414.97803	993.079285	0	355.98053	579.193787	325.866669	924.488892	359.659821	360.644318	358.705566	137.878418	505.840424	386.128723	0
03/06/03	12:47:00	803.588867	2414.97803	1005.06232	0	355.98053	579.193787	325.866669	924.488892	359.659821	360.644318	358.705566	137.878418	505.840424	386.128723	0
03/06/03	12:48:00	803.588867	2422.302	995.257874	0	355.98053	579.193787	325.866669	924.488892	359.659821	360.644318	358.705566	137.878418	505.840424	386.128723	0
03/06/03	12:49:00	803.588867	2418.64014	983.78772	0	355.98053	579.193787	325.866669	922.822388	359.659821	360.644318	358.705566	137.878418	505.840424	386.128723	0
03/06/03	12:50:00	803.588867	2418.64014	987.032654	0	355.98053	579.193787	325.866669	922.822388	359.659821	360.644318	358.705566	137.878418	505.840424	386.128723	0
03/06/03	12:51:00	803.588867	2418.64014	1000.62598	0	355.98053	579.193787	325.866669	921.167297	359.659821	360.644318	358.705566	137.878418	498.280792	386.128723	0
03/06/03	12:52:00	803.588867	2418.64014	995.701294	0	355.98053	579.193787	325.866669	921.167297	359.659821	360.644318	352.935913	137.878418	498.280792	386.128723	0
03/06/03	12:53:00	803.588867	2418.64014	985.887268	0	355.98053	579.193787	325.866669	919.478516	359.659821	360.644318	352.935913	137.878418	498.280792	386.128723	0
03/06/03	12:54:00	803.588867	2418.64014	985.853577	0	355.98053	579.193787	325.866669	919.478516	359.659821	360.644318	352.935913	137.878418	498.280792	386.128723	0
03/06/03	12:55:00	803.588867	2422.302	997.256653	0	355.98053	579.193787	325.866669	919.478516	359.659821	360.644318	352.935913	137.878418	498.280792	386.128723	0
03/06/03	12:56:00	803.588867	2422.302	997.234192	0	355.98053	579.193787	325.866669	919.478516	359.659821	360.644318	352.935913	137.878418	498.280792	386.128723	0
03/06/03	12:57:00	803.588867	2422.302	989.042358	0	355.98053	579.193787	325.866669	918.277832	359.659821	360.644318	352.935913	137.878418	498.280792	386.128723	0
03/06/03	12:58:00	803.588867	2425.96411	985.763733	0	355.98053	579.193787	325.866669	918.277832	359.659821	360.644318	352.935913	137.878418	490.667999	386.128723	0
03/06/03	12:59:00	803.588867	2418.64014	990.608765	0	355.98053	579.193787	325.866669	918.277832	359.659821	360.644318	352.935913	137.878418	490.667999	386.128723	0
03/06/03	13:00:00	803.588867	2422.302	997.133057	0	355.98053	579.193787	325.866669	918.277832	359.659821	360.644318	352.935913	137.878418	490.667999	386.128723	0
03/06/03	13:01:00	803.588867	2425.96411	993.865173	0	355.98053	579.193787	325.866669	919.831909	359.659821	360.644318	352.935913	137.878418	490.667999	386.128723	0
03/06/03	13:02:00	803.588867	2418.64014	985.69635	0	355.98053	579.193787	325.866669	919.831909	359.659821	360.644318	352.935913	137.878418	490.667999	386.128723	0

DATE	TIME	AETE055 BFBP Discharge Hdr Temp DEG F	AFPY044A DA Pegging Stm Valve PCT	ASFI006 Caulkins LP Stm Flow Output KPPH	ASFI016 Caulkins HP Stm Flow Output KPPH	MAJI002 Unit Megavars MVAR	MAJI004 Unit Megawatts MW	ADPT003C Absolute Cond Vac Calculated IN HGA	DALT004A Cooling Twr Basin Level IN	DAFI027 Cooling Twr Blow-Down Flow GPM	EAFI034 Cooling Twr Blow-Down SDA GPM	DATE014A Water Box Inlet A Temp DEG F	DATE014B Water Box Inlet B Temp DEG F	DATE016A Water Box Outlet A Temp DEG F	DATE016B Water Box Outlet B Temp DEG F	ABFI018 Main Steam Flow KPPH
03/06/03	12:02:00	248.992325	0	101.656853	15.614666	-2.3193359	211.914063	2.36450195	59.6484337	0	202.928207	81.0851135	80.4300156	94.5023499	94.7355347	1360.83435
03/06/03	12:03:00	248.992325	0	101.656853	15.614666	-2.3193359	211.914063	2.36450195	59.6484337	0	196.320251	81.0851135	80.4300156	94.5023499	94.7355347	1360.83435
03/06/03	12:04:00	248.992325	0	99.5426102	15.614666	-2.3193359	211.914063	2.36450195	59.6484337	0	196.320251	81.0851135	80.4300156	94.5023499	94.7355347	1360.83435
03/06/03	12:05:00	248.992325	0	99.5426102	15.1970901	-2.3193359	211.914063	2.36450195	59.6484337	0	196.320251	81.0851135	79.4496155	94.5023499	94.7355347	1360.83435
03/06/03	12:06:00	248.992325	0	99.5426102	15.1970901	-2.3193359	211.914063	2.36450195	59.6484337	0	196.320251	81.0851135	79.4348526	94.5023499	94.7355347	1360.83435
03/06/03	12:07:00	248.992325	0	99.5426102	15.1970901	-2.3193359	211.914063	2.36450195	59.6484337	0	199.651703	81.5192719	80.8199081	94.5023499	94.7355347	1360.83435
03/06/03	12:08:00	248.992325	0	99.5426102	15.6069002	-2.3193359	211.914063	2.36450195	59.6484337	0	199.651703	81.5192719	80.7904205	94.5023499	94.7355347	1360.83435
03/06/03	12:09:00	248.992325	0	99.5426102	15.6069002	-2.3193359	211.914063	2.36450195	59.6484337	0	199.651703	81.5045319	79.331665	94.5023499	94.7355347	1360.83435
03/06/03	12:10:00	248.992325	0	97.4363937	15.6069002	-2.3193359	211.914063	2.36450195	59.6484337	0	209.401657	81.4750595	80.760994	94.5023499	94.7355347	1360.83435
03/06/03	12:11:00	248.992325	0	97.4363937	15.6765375	-2.3193359	211.914063	2.36450195	59.6484337	0	222.697998	81.4456406	80.7315063	94.5023499	94.7355347	1360.83435
03/06/03	12:12:00	248.992325	0	97.4363937	15.6765375	-2.3193359	211.914063	2.36450195	59.6484337	0	229.295303	80.002243	79.2726822	94.5023499	94.7355347	1360.83435
03/06/03	12:13:00	248.992325	0	97.4363937	15.3426962	-2.3193359	211.914063	2.36450195	59.6484337	0	239.209457	81.4014816	79.2579117	94.5023499	94.7355347	1360.83435
03/06/03	12:14:00	248.992325	0	95.4363785	15.3426962	-2.3193359	211.914063	2.36450195	59.6484337	0	239.209457	81.386734	79.2431488	94.5023499	94.7355347	1360.83435
03/06/03	12:15:00	248.992325	0	95.4363785	15.3426962	-2.3193359	211.914063	2.36450195	59.6484337	0	239.209457	81.386734	79.2136841	94.5023499	94.7355347	1360.83435
03/06/03	12:16:00	248.992325	0	100.005768	15.7593679	-2.3193359	211.914063	2.36450195	59.6484337	0	232.624695	81.3425751	80.643074	94.5023499	94.7355347	1360.83435
03/06/03	12:17:00	248.992325	0	100.005768	15.7892265	-2.3193359	211.914063	2.36450195	59.6484337	0	232.624695	81.3278275	80.643074	94.5023499	94.7355347	1360.83435
03/06/03	12:18:00	248.992325	0	83.5727158	15.3872833	-2.3193359	211.914063	2.36450195	59.6484337	0	229.363739	79.8548584	80.643074	94.5023499	96.2001648	1360.83435
03/06/03	12:19:00	248.992325	0	83.9278488	15.8446026	-2.3193359	211.914063	2.36450195	59.6484337	0	226.055542	81.2836609	80.5694427	94.5023499	94.7862244	1360.83435
03/06/03	12:20:00	248.992325	0	81.6262894	15.8446026	-2.3193359	211.914063	2.36450195	59.6484337	0	222.838898	81.2836609	80.5546875	94.5023499	94.7862244	1360.83435
03/06/03	12:21:00	248.992325	0	81.6262894	15.4394484	-2.3193359	211.914063	2.36450195	59.6484337	0	226.124969	81.2395401	80.5399933	94.5023499	94.7862244	1360.83435
03/06/03	12:22:00	248.992325	0	81.6262894	15.5972424	-2.3193359	211.914063	2.36450195	59.6484337	0	226.124969	81.2395401	80.5399933	94.5023499	94.7862244	1360.83435
03/06/03	12:23:00	248.992325	0	79.3897934	15.5972424	-2.3193359	211.914063	2.36450195	59.6484337	0	226.124969	81.2395401	80.5399933	94.5023499	94.7862244	1360.83435
03/06/03	12:24:00	248.992325	0	79.3897934	15.5972424	-2.3193359	211.914063	2.36450195	59.6484337	0	226.124969	81.1806107	80.5399933	94.5023499	94.7862244	1360.83435
03/06/03	12:25:00	248.992325	0	79.3897934	15.5972424	-2.3193359	211.914063	2.36450195	59.6484337	0	226.124969	81.1806107	80.5399933	94.5023499	94.7862244	1360.83435
03/06/03	12:26:00	248.992325	0	79.3897934	15.2328939	-2.3193359	211.914063	2.36450195	59.6484337	0	232.759567	81.1364212	80.4221268	94.5023499	94.7862244	1360.83435
03/06/03	12:27:00	248.992325	0	83.5907059	15.2328939	-2.3193359	211.914063	2.36450195	59.6484337	0	232.759567	81.1364212	80.4221268	94.5023499	94.7862244	1360.83435
03/06/03	12:28:00	248.992325	0	85.7086868	15.7170095	-2.3193359	216.949463	2.36450195	59.6484337	0	226.263733	79.6632385	80.4221268	94.5023499	94.7862244	1360.83435
03/06/03	12:29:00	248.992325	0	80.3832092	15.7170095	-2.3193359	216.949463	2.36450195	59.6484337	0	223.050095	81.0774765	80.4221268	94.5023499	94.7862244	1360.83435
03/06/03	12:30:00	248.992325	0	78.3517075	15.7170095	-2.3193359	216.949463	2.36450195	59.6484337	0	219.789276	81.0774765	80.4221268	94.5023499	94.7862244	1360.83435
03/06/03	12:31:00	248.992325	0	78.3517075	15.5919561	-2.3193359	216.949463	2.36450195	59.6484337	0	219.789276	79.6190567	80.4221268	94.5023499	94.7862244	1360.83435
03/06/03	12:32:00	248.992325	0	82.5733795	15.5919561	-2.3193359	216.949463	2.36450195	59.6484337	0	219.789276	81.0333481	80.4221268	94.5023499	94.7862244	1360.83435
03/06/03	12:33:00	248.992325	0	82.5733795	15.5919561	-2.3193359	216.949463	2.36450195	59.6484337	0	223.050095	81.0333481	80.4221268	94.5023499	94.7862244	1360.83435
03/06/03	12:34:00	248.992325	0	82.5733795	15.5919561	-2.3193359	216.949463	2.36450195	59.6484337	0	226.263733	81.0333481	80.4221268	94.5023499	94.7862244	1360.83435
03/06/03	12:35:00	248.992325	0	80.1150131	15.3185244	-2.3193359	216.949463	2.36450195	59.6484337	0	229.500549	81.0333481	80.4221268	94.5023499	94.7862244	1360.83435
03/06/03	12:36:00	248.992325	0	80.1150131	15.3185244	-2.3193359	216.949463	2.36450195	59.6484337	0	232.759567	81.0333481	80.4221268	94.5023499	94.7862244	1360.83435
03/06/03	12:37:00	248.992325	0	80.1150131	15.3559275	-2.3193359	216.949463	2.36450195	59.6484337	0	232.759567	81.0333481	80.4221268	94.5023499	94.7862244	1360.83435
03/06/03	12:38:00	248.992325	0	80.1150131	15.3541098	-2.3193359	216.949463	2.36450195	59.6484337	0	232.759567	81.0333481	80.4221268	94.5023499	94.7862244	1360.83435
03/06/03	12:39:00	248.992325	0	78.1047745	15.3541098	-2.3193359	216.949463	2.36450195	59.6484337	0	239.27504	81.1662827	80.4221268	94.5023499	94.7862244	1360.83435
03/06/03	12:40:00	248.992325	0	78.1047745	15.2834969	-2.3193359	216.949463	2.36450195	59.6484337	0	242.53157	81.313652	80.4221268	94.5023499	94.7862244	1360.83435
03/06/03	12:41:00	248.992325	0	80.296875	15.73629	-2.3193359	216.949463	2.36450195	59.6484337	0	245.744751	79.9734268	81.4021072	94.5023499	94.7862244	1360.83435
03/06/03	12:42:00	248.992325	0	82.3234253	15.3265734	-2.3193359	216.949463	2.36450195	59.6484337	0	245.744751	79.9734268	81.4021072	94.5023499	94.7862244	1360.83435
03/06/03	12:43:00	248.992325	0	82.3234253	15.3265734	-2.3193359	216.949463	2.36450195	59.6484337	0	248.979324	80.9384003	81.7554398	94.5023499	94.7862244	1360.83435
03/06/03	12:44:00	248.992325	0	77.4616013	15.3265734	-2.3193359	216.949463	2.36450195	59.6484337	0	252.296631	81.0855789	81.7995453	94.5023499	94.7862244	1360.83435
03/06/03	12:45:00	248.992325	0	77.4616013	15.3265734	-2.3193359	216.949463	2.36450195	59.6484337	0	252.296631	81.1591568	80.4448776	94.5023499	94.7862244	1360.83435
03/06/03	12:46:00	253.002487	0	77.4616013	15.3265734	-2.3193359	216.949463	2.36450195	59.6484337	0	255.570724	81.1591568	81.8730545	94.5023499	94.7862244	1360.83435
03/06/03	12:47:00	253.002487	0	73.0758133	15.3265734	-2.3193359	216.949463	2.36450195	59.6484337	0	262.115387	81.1444092	80.4448471	94.5023499	94.7862244	1360.83435
03/06/03	12:48:00	253.002487	0	73.0758133	15.3265734	-2.3193359	216.949463	2.36450195	59.6484337	0	265.386078	81.144371	80.4448471	94.5023499	94.7862244	1360.83435
03/06/03	12:49:00	253.002487	0	73.0758133	15.3265734	-2.3193359	216.949463	2.36450195	59.6484337	0	268.616791	81.100174	80.4448471	94.5023499	94.7862244	1360.83435
03/06/03	12:50:00	253.002487	0	73.0758133	15.3265734	-2.3193359	216.949463	2.36450195	59.6484337	0	278.702637	79.6417084	80.4448471	94.5023499	94.7862244	1360.83435
03/06/03	12:51:00	253.002487	0	75.5356445	15.3669977	-2.3193359	216.949463	2.36450195	59.6484337	0	288.65213	81.0412292	80.4448471	94.5023499	94.7862244	1360.83435
03/06/03	12:52:00	253.002487	0	75.5356445	15.3669977	-2.3193359	216.949463	2.36450195	59.6484337	0	301.769836	81.0264664	80.3121109	94.5023499	94.7862244	1360.83435
03/06/03	12:53:00	253.002487	0	77.7421722	15.3669977	-2.3193359	216.949463	2.36450195	59.6484337	0	308.194977	80.9970016	80.2826385	94.5023499	94.7862244	1360.83435
03/06/03	12:54:00	253.002487	0	72.9945984	15.3669977	-2.3193359	216.949463	2.36450195	59.6484337	0	311.48349	80.9970016	81.710968	94.5023499	94.7862244	1360.83435
03/06/03	12:55:00	253.002487	0	72.9945984	15.3669977	-2.3193359	216.949463	2.36450195	59.6484337	0	318.056763	80.9970016	80.2383728	94.5023499	94.7862244	1360.83435
03/06/03	12:56:00	253.002487	0	75.2110214	15.3669977	-2.3193359	216.949463	2.36450195	59.6484337	0	324.593109	80.9970016	80.2088852	94.5023499	94.7862244	1360.83435
03/06/03	12:57:00	253.002487	0	75.2110214	15.3190641	-2.3193359	216.949463	2.36450195	59.6484337	0	327.860046	80.9970016	80.1793976	94.5023499	94.7862244	1360.83435
03/06/03	12:58:00	253.002487	0	77.2112198	15.3190641	-2.3193359	216.949463	2.36450195	59.6484337	0	badbad	80.9970016	80.1793976	94.5023499	94.7862244	1360.83435
03/06/03	12:59:00	253.002487	0	72.420784	15.3190641	-2.3193359	216.949463	2.36450195	59.6484337	0	badbad	80.9970016	81.5931473	94.5023499	94.7862244	1360.83435
03/06/03	13:00:00	253.002487	0	72.420784	15.3190641	-2.3193359	216.949463	2.36450195	59.6484337	0	328.862396	80.9970016	81.5784149	94.5023499	95.0782089	1360.83435
03/06/03	13:01:00	253.002487	0	74.6142426	15.3190641	-2.3193359	216.949463	2.36450195	59.6484337	0	325.653656	80.9970016	81.5783768	94.5023499	95.0782089	1360.83435
03/06/03	13:02:00	253.002487	0	76.64077	15.3190641	-2.3193359	216.949463	2.36450195	59.6484337	0	322.412903	80.9970016	81.548912	94.5023499	95.0782089	1360.83435

DATE	TIME	MBEL100 Excitation Losses KW	BATI013 AH Gas Outlet Temp DEG F	BAAI046 Excess Oxygen PCT	RMAT500 Relative Humidity PCT	BATI011 AH Air Inlet Temp DEG F	JCFT152 Coal Fdr A Flow Rate KPPH	JCFT252 Coal Fdr B Flow Rate KPPH	JCFT352 Coal Fdr C Flow Rate KPPH	JCFT452 Coal Fdr D Flow Rate KPPH	NAET102 13.8 Kv NAA01 Aux Scr Volts VOLTS	NAET202 13.8 Kv NAAO2 Aux Scr Volts VOLTS	NAIT101 13.8 Kv NAAO1 Aux Scr Current AMPS	NAIT201 13.8 Kv NAA02 Aux Scr Current AMPS	MAII006A Generator Arm Current Phase A KA	MAII006B Generator Arm Current Phase B KA
03/06/03	12:02:00	567.638977	256.127533	4.32154751	5.36498976	107.465561	64.4464111	0.02685483	65.9234619	30.1049805	14039.4287	14231.6885	0.29296178	-1.1718806	5.00390673	5.09667921
03/06/03	12:03:00	567.638977	256.127533	4.32154751	5.51757813	107.465561	69.8510742	0.02685483	69.2468262	29.9035664	14039.4287	14231.6885	0.29296178	-1.1718806	5.00390673	5.09667921
03/06/03	12:04:00	567.638977	256.127533	4.0660367	9.91210842	107.465561	71.1602783	0.02685483	70.6903076	30.172121	14039.4287	14231.6885	0.29296178	-1.1718806	5.00390673	5.09667921
03/06/03	12:05:00	567.638977	256.127533	4.0660367	12.3840332	107.465561	64.3792725	0.02685483	66.1248779	29.9706993	14039.4287	14231.6885	0.29296178	-1.1718806	5.00390673	5.09667921
03/06/03	12:06:00	567.638977	256.127533	4.32959366	13.3911133	107.465561	68.9111328	0.02685483	69.5825195	29.6014404	14039.4287	14231.6885	0.29296178	-1.1718806	5.00390673	5.09667921
03/06/03	12:07:00	567.638977	256.127533	4.06800985	12.3840332	107.465561	70.925293	0.02685483	71.6973877	29.6350117	14039.4287	14231.6885	0.29296178	-1.1718806	5.00390673	5.09667921
03/06/03	12:08:00	567.638977	256.127533	3.81142473	3.93066263	107.465561	67.2662354	0.02685483	68.0383301	29.4000206	14039.4287	14231.6885	0.29296178	-1.1718806	5.00390673	5.09667921
03/06/03	12:09:00	567.638977	256.127533	3.5582819	0.87890488	107.465561	63.4393311	0.02685483	62.7343712	29.4000206	14039.4287	14231.6885	0.29296178	-1.1718806	5.00390673	5.09667921
03/06/03	12:10:00	567.638977	256.127533	4.33506441	2.92358279	107.465561	62.4658165	0.02685483	63.338623	30.2056904	14039.4287	14231.6885	0.29296178	-1.1718806	5.00390673	5.09667921
03/06/03	12:11:00	567.638977	256.127533	4.32227898	3.38134813	107.465561	64.1778564	0.02685483	64.0771408	29.7021446	14039.4287	14231.6885	0.29296178	-1.1718806	5.00390673	5.09667921
03/06/03	12:12:00	567.638977	256.127533	4.07022715	7.89794827	107.465561	68.6090088	0.02685483	69.3810959	29.5678711	14039.4287	14231.6885	0.29296178	-1.1718806	5.00390673	5.09667921
03/06/03	12:13:00	567.638977	256.127533	4.07022715	9.91210842	107.465561	60.5859375	0.02685483	60.720211	29.5678711	14039.4287	14231.6885	0.29296178	-1.1718806	5.00390673	5.09667921
03/06/03	12:14:00	567.638977	256.127533	4.32434368	9.91210842	107.465561	63.4393311	0.02685483	63.7750206	29.2657471	14039.4287	14231.6885	0.29296178	-1.1718806	5.00390673	5.09667921
03/06/03	12:15:00	567.638977	256.127533	4.07205105	4.35790968	107.465561	61.9958496	0.02685483	63.2379112	30.3399639	14039.4287	14231.6885	0.29296178	-1.1718806	5.00390673	5.09667921
03/06/03	12:16:00	567.638977	256.127533	3.82008123	4.35790968	107.465561	66.8298264	0.02685483	65.3863525	29.2993164	14039.4287	14231.6885	0.29296178	-1.1718806	5.00390673	5.09667921
03/06/03	12:17:00	567.638977	256.127533	3.82008123	4.35790968	107.465561	63.4728966	0.02685483	66.0241623	29.2993164	14039.4287	14231.6885	0.29296178	-1.1718806	5.00390673	5.09667921
03/06/03	12:18:00	567.638977	256.127533	4.07634735	6.40258789	107.465561	64.1107178	0.02685483	63.5736046	29.1650372	14039.4287	14231.6885	0.29296178	-1.1718806	5.00390673	5.09667921
03/06/03	12:19:00	567.638977	256.127533	4.07743549	3.0456531	107.465561	62.1636925	0.02685483	61.8615685	29.9706993	14039.4287	14231.6885	0.29296178	-1.1718806	5.00390673	5.09667921
03/06/03	12:20:00	567.638977	256.127533	4.07743549	3.01513481	107.465561	67.9040527	0.02685483	67.2998047	27.2851543	14039.4287	14231.6885	0.29296178	-1.1718806	5.00390673	5.09667921
03/06/03	12:21:00	567.638977	256.127533	3.82628536	3.01513481	107.465561	68.3740234	0.02685483	68.3068848	29.2657471	14039.4287	14231.6885	0.29296178	-1.1718806	5.00390673	5.09667921
03/06/03	12:22:00	567.638977	256.127533	4.08157539	4.35790968	107.465561	62.0965538	0.02685483	63.2043419	29.366457	14039.4287	14231.6885	0.29296178	-1.1718806	5.00390673	5.09667921
03/06/03	12:23:00	567.638977	256.127533	4.33696461	2.03857327	107.465561	67.7362061	0.02685483	67.7697754	30.0714092	14039.4287	14231.6885	0.29296178	-1.1718806	5.00390673	5.09667921
03/06/03	12:24:00	567.638977	256.127533	4.08625221	3.0456531	107.465561	75.927124	0.02685483	73.3087082	29.6014404	14039.4287	14231.6885	0.29296178	-1.1718806	5.00390673	5.09667921
03/06/03	12:25:00	567.638977	256.127533	3.8110559	3.0456531	107.465561	68.9447021	0.02685483	67.1990967	29.93713	14039.4287	14231.6885	0.29296178	-1.1718806	5.00390673	5.09667921
03/06/03	12:26:00	567.638977	256.127533	4.06842709	3.0456531	107.465561	66.8298264	0.02685483	65.1177979	29.4335899	14039.4287	14231.6885	0.29296178	-1.1718806	5.00390673	5.09667921
03/06/03	12:27:00	567.638977	256.127533	4.31938696	3.0456531	107.465561	61.9958496	0.02685483	62.2644043	29.5343018	14039.4287	14231.6885	0.29296178	-1.1718806	5.00390673	5.09667921
03/06/03	12:28:00	567.638977	256.127533	4.31938696	6.46362162	107.465561	67.7697754	0.02685483	68.1054688	33.2940636	14039.4287	14231.6885	0.29296178	-1.1718806	5.00390673	5.09667921
03/06/03	12:29:00	567.638977	256.127533	3.81427121	6.46362162	107.465561	66.1584473	0.02685483	63.338623	30.2728233	14039.4287	14231.6885	0.29296178	-1.1718806	5.00390673	5.26269484
03/06/03	12:30:00	567.638977	256.127533	3.81427121	6.46362162	107.465561	59.4445801	0.02685483	59.0417442	29.93713	14039.4287	14231.6885	0.29296178	-1.1718806	5.00390673	5.26269484
03/06/03	12:31:00	567.638977	256.127533	4.33551264	7.50121975	107.465561	62.2644043	0.02685483	61.8279991	29.8364258	14039.4287	14231.6885	0.29296178	-1.1718806	5.00390673	5.26269484
03/06/03	12:32:00	567.638977	256.127533	4.07436943	7.50121975	107.465561	68.9111328	0.02685483	67.8704834	28.3593731	14039.4287	14231.6885	0.29296178	-1.1718806	5.00390673	5.26269484
03/06/03	12:33:00	567.638977	256.127533	3.56219959	9.72900391	107.465561	64.7485352	0.02685483	64.7485352	29.6014404	14039.4287	14231.6885	0.29296178	-1.1718806	5.00390673	5.26269484
03/06/03	12:34:00	567.638977	256.127533	4.09294653	9.72900391	107.465561	67.333374	0.02685483	67.03125	29.5007305	14039.4287	14231.6885	0.29296178	-1.1718806	5.00390673	5.26269484
03/06/03	12:35:00	567.638977	256.127533	4.35139847	12.9943838	107.465561	66.2591553	0.02685483	65.7220383	29.4671612	14039.4287	14231.6885	0.29296178	-1.1718806	5.00390673	5.26269484
03/06/03	12:36:00	567.638977	256.127533	4.10093117	9.48486423	107.465561	71.9659424	0.02685483	71.1938477	29.4671612	14039.4287	14231.6885	0.29296178	-1.1718806	5.00390673	5.26269484
03/06/03	12:37:00	567.638977	256.127533	3.59247971	7.07397509	107.465561	70.7574387	0.02685483	74.6179199	30.239254	14039.4287	14231.6885	0.29296178	-1.1718806	5.00390673	5.26269484
03/06/03	12:38:00	567.638977	256.127533	3.84958243	7.16552734	107.465561	65.1177979	0.02685483	65.990593	29.9035664	14039.4287	14231.6885	0.29296178	-1.1718806	5.00390673	5.26269484
03/06/03	12:39:00	567.638977	256.127533	4.10487127	8.17260742	107.465561	69.1125412	0.02685483	69.5489502	29.6350117	14039.4287	14231.6885	0.29296178	-1.1718806	5.00390673	5.26269484
03/06/03	12:40:00	567.638977	256.127533	3.84994602	10.4003887	107.465561	65.1513596	0.02685483	64.8828049	29.6350117	14039.4287	14231.6885	0.29296178	-1.1718806	5.00390673	5.26269484
03/06/03	12:41:00	567.638977	256.127533	3.83853388	10.4003887	107.465561	72.4359055	0.02685483	72.2344971	29.6014404	14039.4287	14231.6885	0.29296178	-1.1718806	5.00390673	5.26269484
03/06/03	12:42:00	567.638977	256.127533	3.8380692	10.4003887	107.465561	68.9111328	0.02685483	69.8510742	29.7357159	14039.4287	14231.6885	0.29296178	-1.1718806	5.00390673	5.26269484
03/06/03	12:43:00	567.638977	256.127533	4.09752417	11.4685049	107.465561	65.0170898	0.02685483	65.2185059	28.9300518	13995.4824	14231.6885	0.29296178	-1.1718806	5.00390673	5.26269484
03/06/03	12:44:00	567.638977	256.127533	4.34792662	10.4614258	107.465561	70.3210449	0.02685483	70.0860596	30.239254	13995.4824	14231.6885	0.29296178	-1.1718806	5.00390673	5.26269484
03/06/03	12:45:00	567.638977	256.127533	3.83863044	11.4990234	107.465561	70.488884	0.02685483	70.7574387	30.2056904	13995.4824	14231.6885	0.29296178	-1.1718806	5.16503906	5.26269484
03/06/03	12:46:00	567.638977	256.127533	3.83863044	11.4990234	107.465561	64.2449951	0.02685483	65.4870529	29.5343018	13995.4824	14231.6885	0.29296178	-1.1718806	5.16503906	5.26269484
03/06/03	12:47:00	567.638977	256.127533	4.08606577	9.39330864	107.465561	66.8298264	0.02685483	68.2061768	28.0908184	13995.4824	14231.6885	0.29296178	-1.1718806	5.16503906	5.26269484
03/06/03	12:48:00	567.638977	256.127533	4.08606577	11.4990234	107.465561	64.6142502	0.02685483	63.6407471	29.6685753	13995.4824	14231.6885	0.29296178	-1.1718806	5.16503906	5.26269484
03/06/03	12:49:00	567.638977	256.127533	4.08660316	8.32519531	107.465561	68.5754395	0.02685483	69.0118408	29.8028545	13995.4824	14231.6885	0.29296178	-1.1718806	5.16503906	5.26269484
03/06/03	12:50:00	567.638977	256.127533	3.83411837	6.06689262	107.465561	68.2733078	0.02685483	69.2132568	30.172121	13995.4824	14231.6885	0.29296178	-1.1718806	5.16503906	5.26269484
03/06/03	12:51:00	567.638977	256.127533	4.08922005	8.11157036	107.465561	64.9163742	0.02685483	64.7485352	30.0378399	13995.4824	14231.6885	0.29296178	-1.1718806	5.16503906	5.26269484
03/06/03	12:52:00	567.638977	256.127533	4.35697842	8.11157036	107.465561	70.0189209	0.02685483	69.0789719	30.2056904	13995.4824	14231.6885	0.29296178	-1.1718806	5.16503906	5.26269484
03/06/03	12:53:00	567.638977	256.127533	4.10039568	10.4003887	107.465561	67.1319504	0.02685483	70.3881836	29.2657471	13995.4824	14231.6885	0.29296178	-1.1718806	5.16503906	5.26269484
03/06/03	12:54:00	567.638977	256.127533	4.10039568	8.38622952	107.465561	70.5895996	0.02685483	70.3210449	29.7692852	13995.4824	14231.6885	0.29296178	-1.1718806	5.16503906	5.26269484
03/06/03	12:55:00	567.638977	256.127533	3.84540081	9.48486423	107.465561	62.9693565	0.02685483	62.8686523	32.8240929	13995.4824	14231.6885	0.29296178	-1.1718806	5.16503906	5.26269484
03/06/03	12:56:00	567.638977	256.127533	4.10344601	9.42382717	107.465561	65.1513596	0.02685483	64.6478195	30.2056904	13995.4824	14231.6885	0.29296178	-1.1718806	5.16503906	5.26269484
03/06/03	12:57:00	567.638977	256.127533	4.36129999	8.50829983	107.465561	68.9111328	0.02685483	66.52771	29.4671612	13995.4824	14231.6885	0.29296178	-1.1718806	5.16503906	5.26269484
03/06/03	12:58:00	567.638977	256.127533	3.854913	6.46362162	107.465561	65.9570313	0.02685483	66.4605713	29.5007305	13995.4824	14231.6885	0.29296178	-1.1718806	5.16503906	5.26269484
03/06/03	12:59:00	567.638977	256.127533	4.11731243	7.47070122	107.465561	68.2397385	0.02685483	68.2061768	29.93713	13995.4824	14231.6885	0.29296178	-1.1718806	5.16503906	5.26269484
03/06/03	13:00:00	567.638977	256.127533	3.86235666	9.60693359	107.465561	65.9234619	0.02685483	65.9570313	29.4335899	13995.4824	14231.6885	0.29296178	-1.1718806	5.16503906	5.26269484
03/06/03	13:01:00	567.638977	256.127533	4.12046576	10.6750479	107.465561	64.8828049	0.02685483	63.4728966	29.7021446	13995.4824	14231.6885	0.29296178	-1.1718806	5.16503906	5.26269484
03/06/03	13:02:00	567.638977	256.127533	4.37438583	10.6750479	107.465561	71.0259933	0.02685483	71.5966721	29.8364258	13995.4824	14231.6885	0.29296178	-1.1718806	5.16503906	5.26269484

DATE	TIME	MAII006C Generator Arm Current Phase C KA	RMTT500 Ambient Temp DEG F	ADFI001 Cond Xfer Flow Calculated KPPH	ADLT001 Condenser Hotwell Level IN	TSTMFLO Total Stm Flow KPPH	BAFI002 Total Air Flow KPPH	REAI001 CEMS CO2 %	BAAI052 Boiler CO PPM	BATE055 SCR Outlet Temp. DEG F	BATI020 AH Air Outlet Temp. DEG F		AEFY136 Fisher FW Valve Demand %		
03/06/03	12:02:00	5.15527344	85.6811523	198.098877	46.801754	1361.43738	2170.13745	11.595458	0	636.923218	549.849731	0	43.1728287		160.501708
03/06/03	12:03:00	5.15527344	85.6811523	196.078171	46.801754	1361.43738	2170.13745	11.595458	0	636.923218	549.849731	0	43.1728287		169.028322
03/06/03	12:04:00	5.15527344	85.6811523	199.273895	46.801754	1361.43738	2170.13745	11.2841797	0	636.923218	549.849731	0	43.1728287		172.049562
03/06/03	12:05:00	5.15527344	85.6811523	200.647446	46.801754	1361.43738	2170.13745	11.2902822	0	636.923218	549.849731	0	44.2731056		160.501705
03/06/03	12:06:00	5.15527344	85.6811523	194.248672	46.801754	1361.43738	2170.13745	11.4855957	0	636.923218	549.849731	0	43.2221947		168.121948
03/06/03	12:07:00	5.15527344	85.6811523	194.319336	46.801754	1361.43738	2170.13745	11.6870117	0	636.923218	549.849731	0	42.149128		172.284547
03/06/03	12:08:00	5.15527344	85.6811523	196.148193	46.801754	1361.43738	2170.13745	11.5893555	0	636.923218	549.849731	0	42.149128		164.731441
03/06/03	12:09:00	5.15527344	85.6811523	198.929016	46.801754	1361.43738	2170.13745	11.4916983	0	636.923218	549.849731	0	42.149128		155.600578
03/06/03	12:10:00	5.15527344	85.6811523	194.107224	46.801754	1361.43738	2170.13745	11.4916983	0	636.923218	549.849731	0	43.2650986		156.036985
03/06/03	12:11:00	5.15527344	85.6811523	193.753143	46.801754	1361.43738	2205.27271	11.784668	0	636.923218	549.849731	0	42.2454338		157.983997
03/06/03	12:12:00	5.15527344	85.6811523	187.704956	46.801754	1361.43738	2205.27271	11.583252	0	636.923218	549.849731	0	42.2454338		167.584831
03/06/03	12:13:00	5.15527344	85.6811523	188.143433	46.801754	1361.43738	2203.59302	11.2963858	0	636.923218	549.849731	0	44.3504219		150.900874
03/06/03	12:14:00	5.15527344	85.6811523	182.361221	46.801754	1361.43738	2165.14941	11.5893555	0	636.923218	549.849731	0	43.3154106		156.506954
03/06/03	12:15:00	5.15527344	85.6811523	183.412476	46.801754	1361.43738	2201.32275	11.796874	0	636.923218	549.849731	0	43.2556229		155.60058
03/06/03	12:16:00	5.15527344	85.6811523	198.168182	46.801754	1361.43738	2163.68921	11.3879385	0	636.923218	549.849731	0	42.1115532		161.54235
03/06/03	12:17:00	5.15527344	85.6811523	197.056274	46.801754	1361.43738	2198.74634	11.4550772	0	636.923218	549.849731	0	43.1506958		158.82323
03/06/03	12:18:00	5.15527344	85.6811523	183.412476	46.801754	1361.43738	2198.74634	11.6931143	0	636.923218	549.849731	0	44.2198181		156.876214
03/06/03	12:19:00	5.31640625	85.6811523	180.924744	47.2851563	1361.43738	2198.74634	11.6870117	0	636.923218	549.849731	0	43.1579933		154.022815
03/06/03	12:20:00	5.31640625	85.6811523	177.708176	47.2851563	1361.43738	2198.74634	11.4855957	0	636.923218	549.849731	0	42.1449127		162.515867
03/06/03	12:21:00	5.31640625	87.2680664	186.530685	47.2851563	1361.43738	2158.50684	11.4855957	0	636.923218	549.849731	0	43.160553		165.97351
03/06/03	12:22:00	5.31640625	87.2680664	187.924316	47.2851563	1361.43738	2193.30664	11.4916983	0	636.923218	549.849731	0	44.1747589		154.694208
03/06/03	12:23:00	5.31640625	87.2680664	180.011597	47.2851563	1361.43738	2193.30664	11.6931143	0	636.923218	549.849731	0	42.0136604		165.604245
03/06/03	12:24:00	5.31640625	87.2680664	178.017029	47.2851563	1361.43738	2193.30664	11.4916983	0	636.923218	549.849731	0	41.9985695		178.864127
03/06/03	12:25:00	5.31640625	87.2680664	186.604294	47.2851563	1361.43738	2193.30664	11.2902822	0	636.923218	549.849731	0	43.0551147		166.107784
03/06/03	12:26:00	5.31640625	87.2680664	188.362274	47.2851563	1361.43738	2193.30664	11.4916983	0	636.923218	549.849731	0	44.0577621		161.408069
03/06/03	12:27:00	5.31640625	87.2680664	178.402313	47.2851563	1361.43738	2193.30664	11.7907715	0	636.923218	549.849731	0	42.9878273		153.82141
03/06/03	12:28:00	5.31640625	87.2680664	174.432327	47.2851563	1361.43738	2193.30664	11.5893555	0	636.923218	549.849731	0	41.9561501		169.196163
03/06/03	12:29:00	5.31640625	87.2680664	169.480835	47.2851563	1361.43738	2194.14014	11.3879385	0	636.923218	549.849731	0	42.9570007		159.796748
03/06/03	12:30:00	5.31640625	87.2680664	155.360748	47.7685509	1361.43738	2194.14014	11.3879385	0	636.923218	549.849731	0	44.0197372		148.450309
03/06/03	12:31:00	5.31640625	87.2680664	149.504807	48.2519531	1361.43738	2194.14014	11.6809082	0	636.923218	549.849731	0	42.9877014		153.955684
03/06/03	12:32:00	5.31640625	87.2680664	138.241516	48.2519531	1361.43738	2232.427	11.6870117	0	636.923218	549.849731	0	42.9877014		165.167844
03/06/03	12:33:00	5.31640625	87.2680664	141.772659	48.2519531	1361.43738	2197.22827	11.2841797	0	636.923218	549.849731	0	44.003727		159.125366
03/06/03	12:34:00	5.31640625	87.2680664	134.004288	48.2519531	1361.43738	2197.22827	11.4855957	0	636.923218	549.849731	0	44.003727		163.892209
03/06/03	12:35:00	5.31640625	87.2680664	133.078766	48.2519531	1361.43738	2197.22827	11.6931143	0	636.923218	549.849731	0	42.8752289		161.47521
03/06/03	12:36:00	5.31640625	87.2680664	136.340988	48.2519531	1361.43738	2197.22827	11.5893555	0	636.923218	549.849731	0	42.9051933		172.653806
03/06/03	12:37:00	5.31640625	87.2680664	153.314224	48.2519531	1361.43738	2226.81665	11.2902822	0	636.923218	549.849731	0	42.9051933		175.641467
03/06/03	12:38:00	5.31640625	87.2680664	157.206055	48.2519531	1361.43738	2188.84009	11.4855957	0	636.923218	549.849731	0	43.9064331		161.038812
03/06/03	12:39:00	5.31640625	87.2680664	151.693329	48.2519531	1361.43738	2185.80957	11.6931143	0	636.923218	549.849731	0	42.8437653		168.323358
03/06/03	12:40:00	5.31640625	87.2680664	151.058273	48.2519531	1361.43738	2222.71191	11.6931143	0	636.923218	549.849731	0	42.8437653		159.696031
03/06/03	12:41:00	5.31640625	87.2680664	156.154266	48.2519531	1361.43738	2218.57129	11.4916983	0	636.923218	549.849731	0	41.8240967		174.298698
03/06/03	12:42:00	5.31640625	87.2680664	153.939957	48.2519531	1361.43738	2215.21753	11.4916983	0	636.923218	549.849731	0	42.8390732		168.524778
03/06/03	12:43:00	5.31640625	87.2680664	154.829483	48.2519531	1361.43738	2249.73584	11.6931143	0	636.923218	549.849731	0	42.8863297		159.192502
03/06/03	12:44:00	5.31640625	87.2680664	149.87175	48.2519531	1361.43738	2214.79736	11.8884277	0	636.923218	549.849731	0	41.8481979		170.673213
03/06/03	12:45:00	5.31640625	87.2680664	154.651978	47.7685509	1361.43738	2252.06519	11.6931143	0	636.923218	549.849731	0	42.8552589		171.478868
03/06/03	12:46:00	5.31640625	87.2680664	155.537445	47.7685509	1361.43738	2210.39282	11.4916983	0	636.923218	549.849731	0	42.8552589		159.293205
03/06/03	12:47:00	5.31640625	87.2680664	155.890198	47.7685509	1361.43738	2246.60913	11.6931143	0	636.923218	549.849731	0	42.8601151		163.153676
03/06/03	12:48:00	5.31640625	87.2680664	155.272324	47.7685509	1361.43738	2246.23462	11.6931143	0	636.923218	549.849731	0	42.9007301		157.950427
03/06/03	12:49:00	5.31640625	87.2680664	157.642242	47.7685509	1361.43738	2246.23462	11.6870117	0	636.923218	549.849731	0	41.8612976		167.41699
03/06/03	12:50:00	5.31640625	87.2680664	154.651978	47.7685509	1361.43738	2246.27539	11.5893555	0	636.923218	549.849731	0	42.9508362		167.685541
03/06/03	12:51:00	5.31640625	87.2680664	156.242188	47.7685509	1361.43738	2246.27539	11.394042	0	636.923218	549.849731	0	42.9508362		159.729604
03/06/03	12:52:00	5.31640625	87.2680664	142.738022	47.7685509	1361.43738	2246.27539	11.7907715	0	636.923218	549.849731	0	42.9508362		169.330438
03/06/03	12:53:00	5.31640625	87.2680664	154.563156	47.7685509	1361.43738	2245.25244	11.4978018	0	636.923218	549.849731	0	42.9508362		166.812736
03/06/03	12:54:00	5.31640625	87.2680664	157.03125	47.7685509	1361.43738	2254.63086	11.2841797	0	636.923218	549.849731	0	42.9997673		170.706785
03/06/03	12:55:00	5.31640625	87.2680664	159.029953	47.7685509	1361.43738	2254.63086	11.4916983	0	636.923218	549.849731	0	42.9997673		158.688957
03/06/03	12:56:00	5.31640625	87.2680664	152.95549	47.7685509	1361.43738	2254.22363	11.595458	0	636.923218	549.849731	0	42.9997673		160.031724
03/06/03	12:57:00	5.31640625	87.2680664	153.403763	47.7685509	1361.43738	2209.84082	11.6870117	0	636.923218	549.849731	0	41.9171524		164.932859
03/06/03	12:58:00	5.31640625	87.2680664	153.939957	47.7685509	1361.43738	2247.00732	11.4794922	0	636.923218	549.849731	0	42.960556		161.945188
03/06/03	12:59:00	5.31640625	87.2680664	158.077194	47.7685509	1361.43738	2210.87598	11.4794922	0	636.923218	549.849731	0	42.960556		166.4099
03/06/03	13:00:00	5.31640625	87.2680664	154.651978	47.7685509	1361.43738	2246.17285	11.4916983	0	627.918213	549.849731	0	43.9757652		161.340938
03/06/03	13:01:00	5.31640625	87.2680664	156.593353	47.7685509	1361.43738	2208.47754	11.5893555	0	627.918213	549.849731	0	42.9051018		158.084701
03/06/03	13:02:00	5.31640625	87.2680664	157.642242	47.270504	1361.43738	2244.2666	11.7907715	0	627.918213	549.849731	0	42.9051018		172.485946

		MAJI007	MAJI008	NAJT101	NAJT201	AEFI135	AEFI131	FDFI002	FDFI022	AAFY018A	FBFI021	AETE137	AAPTOO6	FDPT002	FDTT002	FDPT022
		Generator	Generator	13.8 kv	13.8 kv	FW Flow	SH Spray	Sootblower	SCR	Cont.	MS to Aux	Feedwater	Selected	Sootblower	Sootblower	A.H.
		Megawatts	Megavars	NAA01 Gen	NAA02 Gen	Comp.	Flow	Steam	Sootblower	Blowdown	Stm. Flow	Temp.	Drum	Steam	Steam	Sootblower
				Aux Load	Aux Load			Flow	Stm Flow	Flow			Pressure	Pressure	Temp.	Stm. Press
DATE	TIME	MW	MVAR	MW	MW	KPPH	KPPH	KPPH	KPPH	PCT	KPPH	DEG F	PSIG	PSIG	DEG F	PSIG
03/06/03	13:03:00	216.186508	4.99876785	14.4451895	8.05480957	1429.29517	38.8240356	0	1.95849788	0	0	366.113068	2476.74561	319.763184	700.134277	380.493164
03/06/03	13:04:00	216.186508	4.99876785	14.4451895	7.97241163	1429.29517	67.9923782	0	1.95849788	0	0	366.113068	2476.74561	319.763184	700.134277	380.493164
03/06/03	13:05:00	216.186508	4.99876785	14.4451895	7.97241163	1429.29517	72.1970139	0	1.95849788	0	0	366.113068	2476.74561	319.763184	700.134277	380.493164
03/06/03	13:06:00	216.186508	4.99876785	14.4451895	7.96325636	1429.29517	66.7424088	0	1.95849788	0	0	366.113068	2476.74561	319.763184	700.134277	380.493164
03/06/03	13:07:00	216.186508	4.99876785	14.1430655	7.67028761	1429.29517	42.9433746	0	1.95849788	0	0	366.113068	2476.74561	319.763184	710.205078	380.493164
03/06/03	13:08:00	216.186508	4.99876785	14.1430655	7.97241163	1459.61353	61.1456375	0	1.95849788	0	0	366.113068	2476.74561	319.763184	710.205078	380.493164
03/06/03	13:09:00	216.186508	4.99876785	14.1430655	7.97241163	1459.61353	74.210083	0	1.95849788	0	0	366.113068	2476.74561	319.763184	710.205078	380.493164
03/06/03	13:10:00	216.186508	4.99876785	14.1430655	7.97241163	1426.65002	74.210083	0	1.95849788	0	0	366.113068	2476.74561	319.763184	710.205078	380.493164
03/06/03	13:11:00	216.186508	4.99876785	14.1430655	8.27453613	1426.65002	44.8614235	0	1.95849788	0	0	366.113068	2476.74561	319.763184	710.205078	380.493164
03/06/03	13:12:00	216.186508	4.99876785	14.1430655	7.92663622	1457.25244	38.8240356	0	1.95849788	0	0	366.113068	2476.74561	319.763184	710.205078	380.493164
03/06/03	13:13:00	216.186508	4.99876785	14.1430655	7.92663622	1457.25244	66.7424088	0	1.95849788	0	0	366.113068	2476.74561	319.763184	710.205078	380.493164
03/06/03	13:14:00	216.186508	4.99876785	14.1430655	7.92663622	1426.94177	74.7752686	0	1.95849788	0	0	366.113068	2476.74561	319.763184	710.205078	380.493164
03/06/03	13:15:00	216.186508	4.99876785	14.1430655	7.92663622	1395.38245	53.8211861	0	1.95849788	0	0	366.113068	2476.74561	319.763184	710.205078	380.493164
03/06/03	13:16:00	216.186508	4.99876785	14.1430655	7.92663622	1428.78748	39.8937416	0	1.95849788	0	0	366.113068	2476.74561	319.763184	710.205078	380.493164
03/06/03	13:17:00	216.186508	4.99876785	14.1430655	7.92663622	1428.78748	64.8222656	0	1.95849788	0	0	366.113068	2476.74561	319.763184	710.205078	380.493164
03/06/03	13:18:00	216.186508	4.99876785	14.1430655	7.92663622	1428.78748	76.7207184	0	1.95849788	0	0	366.113068	2476.74561	319.763184	710.205078	380.493164
03/06/03	13:19:00	216.186508	4.99876785	14.1430655	7.91748047	1396.22729	71.9048538	0	1.95849788	0	0	366.113068	2476.74561	319.763184	710.205078	380.493164
03/06/03	13:20:00	216.186508	4.99876785	14.1430655	7.91748047	1396.22729	40.9355507	0	1.95849788	0	0	366.113068	2476.74561	319.763184	710.205078	380.493164
03/06/03	13:21:00	216.186508	4.99876785	14.1430655	7.91748047	1458.05835	40.9355507	0	1.95849788	0	0	366.113068	2476.74561	319.763184	710.205078	380.493164
03/06/03	13:22:00	216.186508	4.99876785	14.1430655	7.91748047	1458.05835	70.7240753	0	1.95849788	0	0	366.113068	2476.74561	319.763184	710.205078	380.493164
03/06/03	13:23:00	216.186508	4.99876785	14.1430655	7.91748047	1394.35486	74.4932175	0	1.95849788	0	0	366.113068	2476.74561	319.763184	710.205078	380.493164
03/06/03	13:24:00	216.186508	4.99876785	14.1430655	7.89916945	1394.35486	48.4703484	0	1.95849788	0	0	366.113068	2476.74561	319.763184	710.205078	380.493164
03/06/03	13:25:00	216.186508	4.99876785	14.1430655	8.21044922	1425.39771	44.3896675	0	1.95849788	0	0	366.113068	2476.74561	319.763184	710.205078	380.493164
03/06/03	13:26:00	216.186508	4.99876785	14.1430655	8.21044922	1458.11279	69.8253632	0	1.95849788	0	0	366.113068	2476.74561	319.763184	710.205078	380.493164
03/06/03	13:27:00	216.186508	4.99876785	14.1430655	8.1646719	1458.11279	73.6405258	0	1.95849788	0	0	366.113068	2476.74561	319.763184	710.205078	380.493164
03/06/03	13:28:00	216.186508	4.99876785	14.1430655	8.1646719	1425.70093	57.5999374	0	1.95849788	0	0	366.113068	2476.74561	319.763184	710.205078	380.493164

DATE	TIME	FDTT022 SCR/AH Sootblower Stm Temp DEG F	ABPIOO7 Turbine Throttle Pressure PSIG	ABTE008 Main Stm Temp DEG F	AEFI111 Reheater Spray Flow KPPH	ABPI010 Cold Reheat Stm Press PSIG	ABTE016 Cold Reheat Temp DEG F	ABPT024 Hot Reheat Pressure PSIG	ABTE022 Hot Reheat Temp DEG F	AETE119 BFP Hdr Discharge Temp DEG F	AETE130 FW Htr #7 Outlet Temp DEG F	AETE035 FW Htr #7 Casc Drain Temp DEG F	AFPT026 Cold Reheat Ext Hdr Press PSIG	AFTE027 Cold Reheat Ext Hdr Temp DEG F	AFTI017 HP Aux Steam Temp DEG F	AFFI017 Spray Flow to HP Aux Steam KPPH
03/06/03	13:03:00	803.588867	2418.64014	987.330017	0	355.98053	579.193787	325.866669	918.19928	359.659821	360.644318	352.935913	137.878418	490.667999	386.128723	0
03/06/03	13:04:00	803.588867	2422.302	995.487854	0	355.98053	579.193787	325.866669	918.19928	359.659821	360.644318	352.935913	137.878418	490.667999	386.128723	0
03/06/03	13:05:00	803.588867	2418.64014	997.110596	0	355.98053	579.193787	325.866669	919.831909	359.659821	360.644318	352.935913	137.878418	490.667999	386.128723	0
03/06/03	13:06:00	803.588867	2422.302	988.918823	0	355.98053	579.193787	325.866669	919.831909	359.659821	360.644318	352.935913	137.878418	490.667999	386.128723	0
03/06/03	13:07:00	803.588867	2418.64014	985.640198	0	355.98053	579.193787	325.866669	919.831909	359.659821	360.644318	352.935913	137.878418	490.667999	386.128723	0
03/06/03	13:08:00	803.588867	2422.302	993.77533	0	355.98053	579.193787	325.866669	919.831909	359.659821	360.644318	352.935913	137.878418	490.667999	386.128723	0
03/06/03	13:09:00	803.588867	2422.302	1000.30017	0	355.98053	579.193787	325.866669	919.831909	359.659821	360.644318	352.935913	137.878418	483.072418	386.128723	0
03/06/03	13:10:00	803.588867	2422.302	993.752869	0	355.98053	579.193787	325.866669	919.831909	359.659821	360.644318	352.935913	137.878418	483.072418	386.128723	0
03/06/03	13:11:00	803.588867	2418.64014	985.572815	0	355.98053	579.193787	325.866669	919.831909	359.659821	360.644318	352.935913	137.878418	483.072418	386.128723	0
03/06/03	13:12:00	803.588867	2418.64014	987.217712	0	355.98053	579.193787	325.866669	918.631287	359.659821	360.644318	352.935913	137.878418	483.072418	386.128723	0
03/06/03	13:13:00	803.588867	2414.97803	998.666077	0	355.98053	579.193787	325.866669	918.631287	359.659821	360.644318	352.935913	137.878418	483.072418	386.128723	0
03/06/03	13:14:00	803.588867	2414.97803	997.009583	0	355.98053	579.193787	325.866669	918.631287	359.659821	360.644318	352.935913	137.878418	483.072418	386.128723	0
03/06/03	13:15:00	803.588867	2418.64014	987.206543	0	355.98053	579.193787	325.866669	918.631287	359.659821	360.644318	352.935913	137.878418	483.072418	386.128723	0
03/06/03	13:16:00	803.588867	2414.97803	987.195313	0	355.98053	579.193787	325.866669	918.631287	359.659821	360.644318	352.935913	137.878418	483.072418	386.128723	0
03/06/03	13:17:00	803.588867	2422.302	996.987061	0	355.98053	579.193787	325.866669	920.230286	359.659821	360.644318	352.935913	137.878418	483.072418	386.128723	0
03/06/03	13:18:00	803.588867	2422.302	998.576111	0	355.98053	579.193787	325.866669	921.840393	359.659821	360.644318	352.935913	137.878418	483.072418	386.128723	0
03/06/03	13:19:00	803.588867	2418.64014	990.395325	0	355.98053	579.193787	325.866669	920.185303	359.659821	360.644318	352.935913	137.878418	483.072418	386.128723	0
03/06/03	13:20:00	803.588867	2414.97803	985.494202	0	355.98053	579.193787	325.866669	920.185303	359.659821	360.644318	352.935913	137.878418	483.072418	386.128723	0
03/06/03	13:21:00	803.588867	2414.97803	990.372864	0	355.98053	579.193787	325.866669	920.185303	359.659821	360.644318	352.935913	137.878418	483.072418	386.128723	0
03/06/03	13:22:00	803.588867	2418.64014	998.542419	0	355.98053	579.193787	325.866669	920.185303	359.659821	360.644318	352.935913	137.878418	483.072418	386.128723	0
03/06/03	13:23:00	803.588867	2422.302	993.618042	0	355.98053	579.193787	325.866669	920.185303	359.659821	360.644318	352.935913	137.878418	483.072418	386.128723	0
03/06/03	13:24:00	803.588867	2422.302	987.049194	0	355.98053	579.193787	325.866669	920.185303	359.659821	360.644318	352.935913	137.878418	483.072418	386.128723	0
03/06/03	13:25:00	803.588867	2422.302	988.660461	0	355.98053	579.193787	325.866669	920.185303	359.659821	360.644318	352.935913	137.878418	483.072418	386.128723	0
03/06/03	13:26:00	803.588867	2425.96411	998.986023	0	355.98053	579.193787	325.866669	920.185303	359.659821	360.644318	352.935913	137.878418	483.072418	386.128723	0
03/06/03	13:27:00	803.588867	2425.96411	997.34082	0	355.98053	579.193787	325.866669	920.185303	359.659821	360.644318	352.935913	137.878418	475.362946	386.128723	0
03/06/03	13:28:00	803.588867	2425.96411	987.537659	0	355.98053	579.193787	325.866669	920.185303	359.659821	360.644318	352.935913	137.878418	475.362946	386.128723	0

		AETE055	AFPY044A	ASFI006	ASFI016	MAJI002	MAJI004	ADPT003C	DALT004A	DAFI027	EAFI034	DATE014A	DATE014B	DATE016A	DATE016B	ABFI018
		BFBP	DA	Caulkins	Caulkins	Unit	Unit	Absolute	Cooling	Cooling	Cooling	Water Box	Water Box	Water Box	Water Box	Main
		Discharge	Pegging	LP Stm	HP Stm	Megavars	Megawatts	Cond Vac	Twr Basin	Twr Blow-	Twr Blow-	Inlet A	Inlet B	Outlet A	Outlet B	Steam
		Hdr Temp	Stm Valve	Flow Output	Flow Output			Calculated	Level	Down Flow	Down SDA	Temp	Temp	Temp	Temp	Flow
DATE	TIME	DEG F	PCT	KPPH	KPPH	MVAR	MW	IN HGA	IN	GPM	GPM	DEG F	DEG F	DEG F	DEG F	KPPH
03/06/03	13:03:00	253.002487	0	76.64077	15.745923	-2.3193359	216.949463	2.36450195	59.6484337	0	319.188232	80.9970016	80.0761795	94.5023499	95.0782089	1360.83435
03/06/03	13:04:00	253.002487	0	74.1474533	15.3362379	-2.3193359	216.949463	2.36450195	59.6484337	0	319.188232	80.9970016	80.046669	94.5023499	95.0782089	1360.83435
03/06/03	13:05:00	253.002487	0	74.1474533	15.3689671	-2.3193359	216.949463	2.36450195	59.6484337	0	319.188232	80.9970016	81.4899673	94.5023499	95.0782089	1360.83435
03/06/03	13:06:00	253.002487	0	74.1474533	15.3581839	-2.3193359	216.949463	2.36450195	59.6484337	0	319.188232	81.445816	81.445816	94.5023499	95.0782089	1360.83435
03/06/03	13:07:00	253.002487	0	74.1474533	15.3581839	-2.3193359	216.949463	2.36450195	59.6484337	0	319.188232	80.0171738	81.445816	94.5023499	95.0782089	1360.83435
03/06/03	13:08:00	253.002487	0	76.2779465	15.3366976	-2.3193359	216.949463	2.36450195	59.6484337	0	312.688934	80.0171738	81.445816	94.5023499	95.0782089	1360.83435
03/06/03	13:09:00	253.002487	0	76.2779465	15.2510805	-2.3193359	216.949463	2.36450195	59.6484337	0	302.858826	80.0171738	80.0171738	94.5023499	95.0782089	1360.83435
03/06/03	13:10:00	253.002487	0	74.0593567	15.3208513	-2.3193359	216.949463	2.36450195	59.6484337	0	299.579956	80.0024261	80.0024261	94.5023499	95.0782089	1360.83435
03/06/03	13:11:00	253.002487	0	74.0593567	15.445693	-2.3193359	216.949463	2.36450195	59.6484337	0	296.370544	81.431076	81.4163895	94.5023499	95.0782089	1360.83435
03/06/03	13:12:00	253.002487	0	74.0593567	15.445693	-2.3193359	216.949463	2.36450195	59.6484337	0	293.125824	81.4163895	81.4163895	94.5023499	95.0782089	1360.83435
03/06/03	13:13:00	253.002487	0	72.0461197	15.445693	-2.3193359	216.949463	2.36450195	59.6484337	0	296.370544	81.4163895	81.4016647	94.5023499	95.0782089	1360.83435
03/06/03	13:14:00	253.002487	0	72.0461197	15.445693	-2.3193359	216.949463	2.36450195	59.6484337	0	299.579956	81.4163895	79.9729767	94.5023499	95.0782089	1360.83435
03/06/03	13:15:00	253.002487	0	78.5810013	15.445693	-2.3193359	216.949463	2.36450195	59.6484337	0	302.858826	81.4163895	79.9582138	94.5023499	95.0782089	1360.83435
03/06/03	13:16:00	253.002487	0	75.9044571	15.4742661	-2.3193359	216.949463	2.36450195	59.6484337	0	306.102448	81.4163895	79.9435196	94.8593597	95.0782089	1360.83435
03/06/03	13:17:00	253.002487	0	73.522583	14.9983635	-2.3193359	216.949463	2.36450195	59.6484337	0	306.102448	81.4163895	81.3427505	94.8593597	95.0782089	1360.83435
03/06/03	13:18:00	253.002487	0	73.522583	15.4267368	-2.3193359	216.949463	2.36450195	59.6484337	0	312.638824	81.4163895	81.3427505	94.8447647	95.0782089	1360.83435
03/06/03	13:19:00	253.002487	0	75.6369781	15.4267368	-2.3193359	216.949463	2.36450195	59.6484337	0	315.930542	81.4163895	81.3280029	94.8447647	95.0782089	1360.83435
03/06/03	13:20:00	253.002487	0	75.6369781	15.5170527	-2.3193359	216.949463	2.36450195	59.6484337	0	319.139099	81.4163895	81.3132629	94.8447647	95.0782089	1360.83435
03/06/03	13:21:00	253.002487	0	75.6369781	15.5170527	-2.3193359	216.949463	2.36450195	59.6484337	0	319.139099	81.4163895	81.3132629	94.8447647	95.0782089	1360.83435
03/06/03	13:22:00	253.002487	0	73.4591293	15.3552027	-2.3193359	216.949463	2.36450195	59.6484337	0	315.930542	81.4163895	79.8402786	94.8447647	95.0782089	1360.83435
03/06/03	13:23:00	253.002487	0	73.4591293	15.3552027	-2.3193359	216.949463	2.36450195	59.6484337	0	312.688934	81.4163895	81.2690964	94.8447647	95.0782089	1360.83435
03/06/03	13:24:00	253.002487	0	73.4591293	15.3552027	-2.3193359	216.949463	2.36450195	59.6484337	0	309.413269	81.4163895	79.8108139	94.8447647	95.0782089	1360.83435
03/06/03	13:25:00	253.002487	0	73.4591293	15.3552027	-2.3193359	216.949463	2.36450195	59.6484337	0	306.153625	81.4163895	81.2544098	94.8447647	95.0782089	1360.83435
03/06/03	13:26:00	253.002487	0	75.5695419	15.3771544	-2.3193359	221.984863	2.36450195	59.6484337	0	306.153625	81.4163895	81.2544098	94.8447647	95.0782089	1360.83435
03/06/03	13:27:00	253.002487	0	75.5695419	15.3771544	-2.3193359	221.984863	2.36450195	59.6484337	0	302.858826	81.4163895	81.1954803	94.8447647	95.0782089	1360.83435
03/06/03	13:28:00	253.002487	0	74.9072266	15.3771544	-2.3193359	221.984863	2.36450195	59.6484337	0	296.370544	81.4163895	81.1954803	94.8447647	95.0782089	1360.83435

DATE	TIME	MBEL100 Excitation Losses KW	BATI013 AH Gas Outlet Temp DEG F	BAAI046 Excess Oxygen PCT	RMAT500 Relative Humidity PCT	BATI011 AH Air Inlet Temp DEG F	JCFT152 Coal Fdr A Flow Rate KPPH	JCFT252 Coal Fdr B Flow Rate KPPH	JCFT352 Coal Fdr C Flow Rate KPPH	JCFT452 Coal Fdr D Flow Rate KPPH	NAET102 13.8 Kv NAA01 Aux Scr Volts VOLTS	NAET202 13.8 Kv NAAO2 Aux Scr Volts VOLTS	NAIT101 13.8 Kv NAAO1 Aux Scr Current AMPS	NAIT201 13.8 Kv NAA02 Aux Scr Current AMPS	MAII006A Generator Arm Current Phase A KA	MAII006B Generator Arm Current Phase B KA
03/06/03	13:03:00	567.638977	256.127533	3.86515594	11.7126455	107.465561	69.4146729	0.02685483	69.1125412	28.3258038	13995.4824	14231.6885	0.29296178	-1.1718806	5.16503906	5.26269484
03/06/03	13:04:00	567.638977	256.127533	3.86515594	11.7126455	107.465561	62.6672325	0.02685483	62.7343712	29.4335899	13995.4824	14231.6885	0.29296178	-1.1718806	5.16503906	5.26269484
03/06/03	13:05:00	567.638977	256.127533	4.11600399	10.7055655	107.465561	67.4676514	0.02685483	67.4340744	29.4671612	13995.4824	14231.6885	0.29296178	-1.1718806	5.16503906	5.26269484
03/06/03	13:06:00	567.638977	256.127533	4.11600399	10.7055655	107.465561	67.1990967	0.02685483	66.6619873	29.5007305	13995.4824	14231.6885	0.29296178	-1.1718806	5.16503906	5.26269484
03/06/03	13:07:00	567.638977	256.127533	4.11600399	9.60693359	107.465561	69.3810959	0.02685483	68.6761475	29.5007305	13995.4824	14231.6885	0.29296178	-1.1718806	5.16503906	5.26269484
03/06/03	13:08:00	567.638977	256.127533	3.86310768	9.60693359	107.465561	65.5541992	0.02685483	66.1248779	29.366457	13995.4824	14231.6885	0.29296178	-1.1718806	5.16503906	5.26269484
03/06/03	13:09:00	567.638977	256.127533	3.86310768	10.6140137	107.465561	63.3050499	0.02685483	62.2644043	30.2728233	13995.4824	14231.6885	0.29296178	-1.1718806	5.16503906	5.26269484
03/06/03	13:10:00	567.638977	256.127533	4.12176228	11.8041973	107.465561	62.6672325	0.02685483	62.331543	30.0042706	13995.4824	14231.6885	0.29296178	-1.1718806	5.16503906	5.26269484
03/06/03	13:11:00	567.638977	256.127533	4.12176228	9.69848633	107.465561	70.4217529	0.02685483	70.4553146	30.0042706	13995.4824	14231.6885	0.29296178	-1.1718806	5.16503906	5.26269484
03/06/03	13:12:00	567.638977	256.127533	3.87142634	7.5317378	107.465561	69.4818115	0.02685483	69.1125412	30.0042706	13995.4824	14231.6885	0.29296178	-1.1718806	5.16503906	5.26269484
03/06/03	13:13:00	567.638977	256.127533	3.87142634	9.75951958	107.465561	67.6690598	0.02685483	67.1319504	29.4335899	13995.4824	14231.6885	0.29296178	-1.1718806	5.16503906	5.26269484
03/06/03	13:14:00	567.638977	256.127533	4.1242919	8.59985447	107.465561	70.6903076	0.02685483	68.8439865	29.8028545	13995.4824	14231.6885	0.29296178	-1.1718806	5.16503906	5.26269484
03/06/03	13:15:00	567.638977	256.127533	3.87256455	9.75951958	107.465561	67.8369141	0.02685483	66.729126	29.8028545	13995.4824	14231.6885	0.29296178	-1.1718806	5.16503906	5.26269484
03/06/03	13:16:00	567.638977	256.127533	3.87256455	9.75951958	107.465561	71.5966721	0.02685483	70.488884	30.3399639	13995.4824	14231.6885	0.29296178	-1.1718806	5.16503906	5.26269484
03/06/03	13:17:00	567.638977	256.127533	3.61671901	8.69140625	107.465561	64.0100098	0.02685483	63.7750206	29.6350117	13995.4824	14231.6885	0.29296178	-1.1718806	5.16503906	5.26269484
03/06/03	13:18:00	567.638977	256.127533	4.12464142	6.49413967	107.465561	66.628418	0.02685483	66.7626953	27.6879902	13995.4824	14231.6885	0.29296178	-1.1718806	5.16503906	5.26269484
03/06/03	13:19:00	567.638977	256.127533	4.12464142	4.93774271	107.465561	69.8175049	0.02685483	69.3139648	29.9035664	13995.4824	14231.6885	0.29296178	-1.1718806	5.16503906	5.26269484
03/06/03	13:20:00	567.638977	256.127533	4.12464142	6.98242044	107.465561	72.9058838	0.02685483	71.227417	30.2056904	13995.4824	14231.6885	0.29296178	-1.1718806	5.16503906	5.26269484
03/06/03	13:21:00	567.638977	256.127533	4.12464142	6.98242044	107.465561	69.2132568	0.02685483	73.0401535	30.1385498	13995.4824	14231.6885	0.29296178	-1.1718806	5.16503906	5.26269484
03/06/03	13:22:00	567.638977	256.127533	4.12647104	4.57153177	107.465561	69.0454102	0.02685483	68.0047531	29.2993164	13995.4824	14231.6885	0.29296178	-1.1718806	5.16503906	5.26269484
03/06/03	13:23:00	567.638977	256.127533	4.12647104	5.73120022	107.465561	64.2785645	0.02685483	65.7556076	29.8028545	13995.4824	14231.6885	0.29296178	-1.1718806	5.16503906	5.26269484
03/06/03	13:24:00	567.638977	256.127533	4.12647104	7.95898485	107.465561	67.8369141	0.02685483	67.6690598	29.5678711	13995.4824	14231.6885	0.29296178	-1.1718806	5.16503906	5.26269484
03/06/03	13:25:00	567.638977	256.127533	3.86951637	4.93774271	107.465561	64.7821045	0.02685483	63.3050499	29.2657471	13995.4824	14231.6885	0.29296178	-1.1718806	5.16503906	5.26269484
03/06/03	13:26:00	567.638977	256.127533	3.86951637	0.87890488	107.465561	62.6672325	0.02685483	62.1972618	31.5820332	13995.4824	14231.6885	0.29296178	-1.1718806	5.16503906	5.26269484
03/06/03	13:27:00	567.638977	256.127533	4.12918282	2.95410109	107.465561	64.0100098	0.02685483	64.5471191	29.5678711	13995.4824	14231.6885	0.29296178	-1.1718806	5.16503906	5.26269484
03/06/03	13:28:00	567.638977	256.127533	4.12918282	5.02929735	107.465561	62.9357872	0.02685483	62.0965538	30.1385498	13995.4824	14231.6885	0.29296178	-1.1718806	5.16503906	5.26269484

		MAII006C	RMTT500	ADFI001	ADLT001	TSTMFLO	BAFI002	REAI001	BAAI052	BATE055	BATI020		AEFY136		
		Generator	Ambient	Cond Xfer	Condenser	Total Stm	Total Air	CEMS	Boiler CO	SCR	AH Air		Fisher FW		
		Arm Current	Temp	Flow	Hotwell	Flow	Flow	CO2		Outlet	Outlet		Valve		
		Phase C		Calculated	Level					Temp.	Temp.		Demand		
DATE	TIME	KA	DEG F	KPPH	IN	KPPH	KPPH	%	PPM	DEG F	DEG F		%		
03/06/03	13:03:00	5.31640625	87.2680664	160.83316	47.270504	1361.43738	2208.54932	11.4916983	0	627.918213	549.849731	0	42.9051018	166.879873	
03/06/03	13:04:00	5.31640625	87.2680664	160.234344	47.270504	1361.43738	2245.71265	11.4916983	0	627.918213	549.849731	0	42.9051018	154.862048	
03/06/03	13:05:00	5.31640625	87.2680664	158.510986	47.270504	1361.43738	2245.71265	11.4916983	0	627.918213	549.849731	0	42.9349747	164.395742	
03/06/03	13:06:00	5.31640625	87.2680664	159.977036	47.270504	1361.43738	2280.54443	11.4916983	0	627.918213	549.849731	0	42.9349747	163.388669	
03/06/03	13:07:00	5.31640625	87.2680664	163.290588	47.270504	1361.43738	2242.82959	11.6931143	0	627.918213	549.849731	0	42.954258	167.584829	
03/06/03	13:08:00	5.31640625	87.2680664	156.066299	47.270504	1361.43738	2242.82959	11.4855957	0	627.918213	549.849731	0	42.954258	161.072389	
03/06/03	13:09:00	5.31640625	87.2680664	158.337616	47.270504	1361.43738	2242.82959	11.6870117	0	627.918213	549.849731	0	42.954258	155.869132	
03/06/03	13:10:00	5.31640625	87.2680664	162.953842	47.270504	1361.43738	2243.25195	11.6870117	0	627.918213	549.849731	0	42.954258	155.029901	
03/06/03	13:11:00	5.31640625	87.2680664	163.794418	47.270504	1361.43738	2243.25195	11.4916983	0	627.918213	549.849731	0	42.954258	170.908193	
03/06/03	13:12:00	5.31640625	87.2680664	160.40567	47.270504	1361.43738	2279.47827	11.4916983	0	627.918213	549.849731	0	43.9649391	168.625478	
03/06/03	13:13:00	5.31640625	87.2680664	159.977036	47.270504	1361.43738	2238.85596	11.4855957	0	627.918213	549.849731	0	43.9649391	164.261455	
03/06/03	13:14:00	5.31640625	87.2680664	168.83136	47.270504	1361.43738	2238.85596	11.6870117	0	627.918213	549.849731	0	42.9468613	169.364003	
03/06/03	13:15:00	5.31640625	87.2680664	170.369827	47.270504	1361.43738	2238.85596	11.5893555	0	627.918213	549.849731	0	42.9468613	164.395749	
03/06/03	13:16:00	5.31640625	87.2680664	156.943771	47.270504	1361.43738	2274.39746	11.4855957	0	627.918213	549.849731	0	42.9468613	172.452375	
03/06/03	13:17:00	5.31640625	87.2680664	160.747772	47.270504	1361.43738	2238.76855	11.6870117	0	627.918213	549.849731	0	43.9505806	157.446897	
03/06/03	13:18:00	5.31640625	87.2680664	158.337616	47.270504	1361.43738	2274.18213	11.6870117	0	627.918213	549.849731	0	42.88731	161.105958	
03/06/03	13:19:00	5.31640625	87.2680664	164.463791	47.270504	1361.43738	2231.21265	11.6870117	0	627.918213	549.849731	0	42.88731	169.061891	
03/06/03	13:20:00	5.31640625	87.2680664	156.768661	47.270504	1361.43738	2268.62378	11.6137695	0	627.918213	549.849731	0	42.88731	174.365846	
03/06/03	13:21:00	5.31640625	87.2680664	158.597595	47.270504	1361.43738	2233.00342	11.3879385	0	627.918213	549.849731	0	43.9358559	172.418815	
03/06/03	13:22:00	5.31640625	87.2680664	158.424332	47.270504	1361.43738	2274.84595	11.5893555	0	627.918213	549.849731	0	43.9358559	166.376335	
03/06/03	13:23:00	5.31640625	87.2680664	168.015976	47.270504	1361.43738	2271.95483	11.595458	0	627.918213	549.849731	0	41.8296585	159.863881	
03/06/03	13:24:00	5.31640625	87.2680664	162.700821	47.270504	1361.43738	2269.22632	11.583252	0	627.918213	549.849731	0	42.8565559	165.1007	
03/06/03	13:25:00	5.47753906	87.2680664	161.514816	47.270504	1361.43738	2269.22632	11.583252	0	627.918213	549.849731	0	42.8565559	157.379756	
03/06/03	13:26:00	5.47753906	87.2680664	157.03125	47.270504	1361.43738	2269.22632	11.583252	0	627.918213	549.849731	0	42.8565559	158.226309	Avg Feed, KP
03/06/03	13:27:00	5.47753906	87.2680664	154.474289	47.270504	1361.43738	2269.22632	11.583252	0	627.918213	549.849731	0	42.8565559	158226.309	Avg lb/hr
03/06/03	13:28:00	5.47753906	87.2680664	156.681046	47.270504	1361.43738	2269.22632	11.7907715	0	627.918213	549.849731	0	42.8565559	79.1131545	Avg TPH

DATE	TIME	MAJI007 Generator Megawatts MW	MAJI008 Generator Megavars MVAR	NAJT101 13.8 kv NAA01 Gen Aux Load MW	NAJT201 13.8 kv NAA02 Gen Aux Load MW	AEFI135 FW Flow Comp. KPPH	AEFI131 SH Spray Flow KPPH	FDFI002 Sootblower Steam Flow KPPH	FDFI022 SCR Sootblower Stm Flow KPPH	AAFY018A Cont. Blowdown Flow PCT	FBFI021 MS to Aux Stm. Flow KPPH	AETE137 Feedwater Temp. DEG F	AAPTOO6 Selected Drum Pressure PSIG	FDPT002 Sootblower Steam Pressure PSIG	FDTT002 Sootblower Steam Temp. DEG F	FDPT022 A.H. Sootblower Stm. Press PSIG
03/06/03	14:15:00	216.186508	12.2619543	14.1430655	8.31115723	1436.84021	46.2477722	0	1.95849788	0	0	366.113068	2476.74561	319.763184	710.205078	380.493164
03/06/03	14:16:00	216.186508	12.2619543	14.1430655	7.92663622	1404.73608	79.9456635	0	1.95849788	0	0	366.113068	2476.74561	319.763184	710.205078	380.493164
03/06/03	14:17:00	216.186508	12.2619543	14.1430655	7.92663622	1374.11841	79.9456635	0	1.95849788	0	0	366.113068	2476.74561	319.763184	710.205078	380.493164
03/06/03	14:18:00	216.186508	12.2619543	14.1430655	7.92663622	1407.21619	30.2961292	0	1.95849788	0	0	366.113068	2476.74561	319.763184	710.205078	380.493164
03/06/03	14:19:00	216.186508	12.2619543	14.1430655	7.92663622	1376.34155	41.4465866	0	1.95849788	0	0	366.113068	2476.74561	319.763184	710.205078	380.493164
03/06/03	14:20:00	216.186508	12.2619543	14.1430655	7.92663622	1413.13977	81.7681656	0	1.95849788	0	0	366.113068	2476.74561	319.763184	710.205078	380.493164
03/06/03	14:21:00	216.186508	12.2619543	14.1430655	7.92663622	1378.578	81.7681656	0	1.95849788	0	0	366.113068	2476.74561	319.763184	710.205078	380.493164
03/06/03	14:22:00	216.186508	12.2619543	14.1430655	7.92663622	1378.578	37.7239571	0	1.95849788	0	0	366.113068	2476.74561	319.763184	710.205078	380.493164
03/06/03	14:23:00	216.186508	12.2619543	14.1430655	7.92663622	1441.1626	21.3241291	0	1.95849788	0	0	366.113068	2476.74561	319.763184	710.205078	380.493164
03/06/03	14:24:00	216.186508	12.2619543	14.1430655	7.92663622	1441.1626	76.7207184	0	1.95849788	0	0	366.113068	2476.74561	319.763184	710.205078	380.493164
03/06/03	14:25:00	216.186508	12.2619543	14.1430655	7.92663622	1379.72083	80.7317657	0	1.95849788	0	0	366.113068	2476.74561	319.763184	710.205078	380.493164
03/06/03	14:26:00	216.186508	12.2619543	14.1430655	7.9083252	1379.72083	50.5953827	0	1.95849788	0	0	366.113068	2476.74561	319.763184	710.205078	380.493164
03/06/03	14:27:00	216.186508	12.2619543	14.1430655	8.21960449	1379.72083	20.3129025	0	1.95849788	0	0	366.113068	2476.74561	319.763184	710.205078	380.493164
03/06/03	14:28:00	216.186508	12.2619543	14.1430655	8.21960449	1379.72083	75.6151733	0	1.95849788	0	0	366.113068	2476.74561	319.763184	710.205078	380.493164
03/06/03	14:29:00	216.186508	12.2619543	14.1430655	8.13720703	1379.72083	83.5509186	0	1.95849788	0	0	366.113068	2476.74561	319.763184	710.205078	380.493164
03/06/03	14:30:00	216.186508	12.2619543	14.1430655	8.13720703	1349.38647	75.8930511	0	1.95849788	0	0	366.113068	2476.74561	319.763184	710.205078	380.493164
03/06/03	14:31:00	216.186508	12.2619543	14.1430655	8.13720703	1379.74341	31.6553364	0	1.95849788	0	0	366.113068	2476.74561	319.763184	710.205078	380.493164
03/06/03	14:32:00	216.186508	12.2619543	14.1430655	7.81677198	1410.55493	45.3282166	0	1.95849788	0	0	366.113068	2476.74561	319.763184	710.205078	380.493164
03/06/03	14:33:00	216.186508	12.2619543	14.1430655	7.81677198	1410.55493	79.6818924	0	1.95849788	0	0	366.113068	2476.74561	319.763184	710.205078	380.493164
03/06/03	14:34:00	216.186508	12.2619543	14.1430655	7.81677198	1373.11316	79.6818924	0	1.95849788	0	0	366.113068	2476.74561	319.763184	710.205078	380.493164
03/06/03	14:35:00	216.186508	12.2619543	14.1430655	8.13720703	1373.11316	28.8729362	0	1.95849788	0	0	366.113068	2476.74561	319.763184	710.205078	380.493164
03/06/03	14:36:00	216.186508	12.2619543	14.1430655	8.12805176	1435.93555	40.9355507	0	1.95849788	0	0	366.113068	2476.74561	319.763184	710.205078	380.493164
03/06/03	14:37:00	216.186508	12.2619543	14.1430655	7.82592773	1405.68787	81.2516251	0	1.95849788	0	0	366.113068	2476.74561	319.763184	710.205078	380.493164
03/06/03	14:38:00	216.186508	12.2619543	14.1430655	7.82592773	1375.07446	81.2516251	0	1.95849788	0	0	366.113068	2476.74561	319.763184	710.205078	380.493164
03/06/03	14:39:00	216.186508	12.2619543	14.1430655	7.72521877	1372.31384	41.9514542	0	1.95849788	0	0	366.113068	2476.74561	319.763184	710.205078	380.493164
03/06/03	14:40:00	216.186508	12.2619543	14.1430655	8.07312012	1408.16614	21.3241291	0	1.95849788	0	0	366.113068	2476.74561	319.763184	710.205078	380.493164
03/06/03	14:41:00	216.186508	12.2619543	14.1430655	8.07312012	1408.16614	79.9456635	0	1.95849788	0	0	366.113068	2476.74561	319.763184	710.205078	380.493164
03/06/03	14:42:00	216.186508	12.2619543	14.1430655	8.07312012	1371.79285	84.0533447	0	1.95849788	0	0	366.113068	2476.74561	319.763184	710.205078	380.493164
03/06/03	14:43:00	216.186508	12.2619543	14.1430655	7.76184082	1371.79285	50.1775665	0	1.95849788	0	0	366.113068	2476.74561	319.763184	710.205078	380.493164
03/06/03	14:44:00	216.186508	12.2619543	14.1430655	8.09142971	1371.79285	22.2894325	0	1.95849788	0	0	366.113068	2476.74561	319.763184	710.205078	380.493164
03/06/03	14:45:00	216.186508	12.2619543	14.1430655	7.78930569	1401.98523	75.8930511	0	1.95849788	0	0	366.113068	2476.74561	319.763184	710.205078	380.493164
03/06/03	14:46:00	216.186508	12.2619543	14.1430655	8.10058498	1367.37439	84.3034363	0	1.95849788	0	0	366.113068	2476.74561	319.763184	710.205078	380.493164
03/06/03	14:47:00	216.186508	12.2619543	14.1430655	8.09142971	1337.26855	72.4880219	0	1.95849788	0	0	366.113068	2476.74561	319.763184	710.205078	380.493164
03/06/03	14:48:00	216.186508	12.2619543	14.1430655	8.09142971	1337.26855	62.5076256	0	1.95849788	0	0	366.113068	2476.74561	319.763184	710.205078	380.493164
03/06/03	14:49:00	216.186508	12.2619543	14.1430655	8.09142971	1367.64258	65.146225	0	1.95849788	0	0	366.113068	2476.74561	319.763184	710.205078	380.493164
03/06/03	14:50:00	216.186508	12.2619543	14.1430655	8.09142971	1399.23499	53.8211861	0	1.95849788	0	0	366.113068	2476.74561	319.763184	710.205078	380.493164
03/06/03	14:51:00	216.186508	12.2619543	14.1430655	8.09142971	1399.23499	60.1039085	0	1.95849788	0	0	366.113068	2476.74561	319.763184	710.205078	380.493164
03/06/03	14:52:00	216.186508	12.2619543	14.1430655	8.09142971	1399.23499	52.6346588	0	1.95849788	0	0	366.113068	2511.99341	319.763184	710.205078	380.493164
03/06/03	14:53:00	216.186508	12.2619543	14.1430655	8.09142971	1399.23499	67.9923782	0	1.95849788	0	0	366.113068	2511.99341	319.763184	710.205078	380.493164
03/06/03	14:54:00	216.186508	12.2619543	14.1430655	8.09142971	1431.73926	42.9433746	0	1.95849788	0	0	366.113068	2511.99341	319.763184	710.205078	380.493164
03/06/03	14:55:00	216.186508	12.2619543	14.1430655	8.11889553	1431.73926	56.8642921	0	1.95849788	0	0	366.113068	2511.99341	319.763184	710.205078	380.493164
03/06/03	14:56:00	216.186508	12.2619543	14.1430655	8.11889553	1394.87561	40.4180031	0	1.95849788	0	0	366.113068	2511.99341	319.763184	710.205078	380.493164
03/06/03	14:57:00	216.186508	12.2619543	14.1430655	8.15551758	1425.65955	38.2779465	0	1.95849788	0	0	366.113068	2511.99341	319.763184	710.205078	380.493164
03/06/03	14:58:00	216.186508	12.2619543	14.1430655	8.15551758	1425.65955	55.3636551	0	1.95849788	0	0	366.113068	2511.99341	319.763184	710.205078	380.493164
03/06/03	14:59:00	216.186508	12.2619543	14.1430655	7.80761671	1391.91455	34.8220978	0	1.95849788	0	0	366.113068	2511.99341	319.763184	710.205078	380.493164
03/06/03	15:00:00	216.186508	12.2619543	14.1430655	8.11889553	1383.98328	60.453125	0	1.95849788	0	0	366.113068	2476.74561	319.763184	710.205078	380.493164
03/06/03	15:01:00	216.186508	12.2619543	14.1430655	7.81677198	1383.98328	42.4503098	0	1.95849788	0	0	366.113068	2476.74561	319.763184	710.205078	380.493164
03/06/03	15:02:00	216.186508	12.2619543	14.1430655	8.12805176	1383.98328	51.0097351	0	1.95849788	0	0	366.113068	2476.74561	319.763184	710.205078	380.493164
03/06/03	15:03:00	216.186508	12.2619543	14.1430655	7.82592773	1352.31897	71.0210876	0	1.95849788	0	0	366.113068	2476.74561	319.763184	710.205078	380.493164
03/06/03	15:04:00	216.186508	12.2619543	14.1430655	8.21960449	1352.31897	68.6088028	0	1.95849788	0	0	366.113068	2476.74561	319.763184	710.205078	380.493164
03/06/03	15:05:00	216.186508	12.2619543	14.1430655	7.91748047	1352.31897	66.7424088	0	1.95849788	0	0	366.113068	2476.74561	319.763184	710.205078	380.493164
03/06/03	15:06:00	216.186508	12.2619543	14.1430655	7.8808589	1352.31897	60.453125	0	1.95849788	0	0	366.113068	2476.74561	319.763184	710.205078	380.493164
03/06/03	15:07:00	216.186508	12.2619543	14.1430655	7.92663622	1352.31897	56.8642921	0	1.95849788	0	0	366.113068	2476.74561	319.763184	710.205078	380.493164
03/06/03	15:08:00	216.186508	12.2619543	14.1430655	8.23791599	1383.22949	51.8285828	0	1.95849788	0	0	366.113068	2476.74561	319.763184	710.205078	380.493164
03/06/03	15:09:00	216.186508	12.2619543	14.1430655	7.83508301	1383.22949	62.5076256	0	1.95849788	0	0	366.113068	2476.74561	319.763184	710.205078	380.493164
03/06/03	15:10:00	216.186508	12.2619543	14.1430655	8.15551758	1383.22949	51.8285828	0	1.95849788	0	0	366.113068	2511.99341	319.763184	710.205078	380.493164
03/06/03	15:11:00	216.186508	12.2619543	14.1430655	8.1463623	1383.22949	54.2108917	0	1.95849788	0	0	366.113068	2511.99341	319.763184	710.205078	380.493164
03/06/03	15:12:00	216.186508	12.2619543	14.1430655	7.84423828	1413.41968	56.8642921	0	1.95849788	0	0	366.113068	2511.99341	319.763184	710.205078	380.493164
03/06/03	15:13:00	216.186508	12.2619543	14.1430655	7.84423828	1444.01538	39.3624954	0	1.95849788	0	0	366.113068	2511.99341	319.763184	710.205078	380.493164
03/06/03	15:14:00	216.186508	12.2619543	14.1430655	7.72521877	1411.56616	55.3636551	0	1.95849788	0	0	366.113068	2511.99341	319.763184	710.205078	380.493164
03/06/03	15:15:00	216.186508	12.2619543	14.1430655	8.06396484	1443.83508	33.5912743	0	1.95849788	0	0	366.113068	2511.99341	319.763184	710.205078	380.493164

DATE	TIME	FDTT022 SCR/AH Sootblower Stm Temp DEG F	ABPIOO7 Turbine Throttle Pressure PSIG	ABTE008 Main Stm Temp DEG F	AEFI111 Reheater Spray Flow KPPH	ABPI010 Cold Reheat Stm Press PSIG	ABTE016 Cold Reheat Temp DEG F	ABPT024 Hot Reheat Pressure PSIG	ABTE022 Hot Reheat Temp DEG F	AETE119 BFP Hdr Discharge Temp DEG F	AETE130 FW Htr #7 Outlet Temp DEG F	AETE035 FW Htr #7 Casc Drain Temp DEG F	AFPT026 Cold Reheat Ext Hdr Press PSIG	AFTE027 Cold Reheat Ext Hdr Temp DEG F	AFTI017 HP Aux Steam Temp DEG F	AFFI017 Spray Flow to HP Aux Steam KPPH
03/06/03	14:15:00	803.588867	2422.302	994.033691	0	355.98053	579.193787	335.937469	918.934387	359.659821	360.644318	352.935913	137.878418	451.9198	386.128723	0
03/06/03	14:16:00	803.588867	2425.96411	1003.80432	0	355.98053	579.193787	335.937469	920.510803	359.659821	360.644318	352.935913	137.878418	451.9198	386.128723	0
03/06/03	14:17:00	803.588867	2422.302	989.064819	0	355.98053	579.193787	335.937469	920.510803	359.659821	360.644318	352.935913	137.878418	451.9198	386.128723	0
03/06/03	14:18:00	803.588867	2418.64014	979.251953	0	355.98053	579.193787	335.937469	918.844604	359.659821	360.644318	352.935913	137.878418	451.9198	386.128723	0
03/06/03	14:19:00	803.588867	2422.302	991.220764	0	355.98053	579.193787	335.937469	918.844604	359.659821	360.644318	352.935913	137.878418	451.9198	386.128723	0
03/06/03	14:20:00	803.588867	2422.302	1005.90479	0	355.98053	579.193787	335.937469	920.432251	359.659821	360.644318	352.935913	137.878418	451.9198	386.128723	0
03/06/03	14:21:00	803.588867	2425.96411	993.343018	0	355.98053	579.193787	335.937469	920.432251	359.659821	360.644318	352.935913	137.878418	451.9198	386.128723	0
03/06/03	14:22:00	803.588867	2418.64014	980.262329	0	355.98053	579.193787	335.937469	918.765991	359.659821	360.644318	352.935913	137.878418	451.9198	386.128723	0
03/06/03	14:23:00	803.588867	2418.64014	986.774292	0	355.98053	579.193787	335.937469	918.765991	359.659821	360.644318	352.935913	137.878418	451.9198	386.128723	0
03/06/03	14:24:00	803.588867	2418.64014	1003.62457	0	355.98053	579.193787	335.937469	918.765991	359.659821	360.644318	352.935913	137.878418	451.9198	386.128723	0
03/06/03	14:25:00	803.588867	2414.97803	995.442932	0	355.98053	579.193787	335.937469	918.765991	359.659821	360.644318	352.935913	137.878418	451.9198	387.571777	0
03/06/03	14:26:00	803.588867	2414.97803	983.984192	0	355.98053	579.193787	335.937469	918.765991	359.659821	360.644318	352.935913	137.878418	444.198883	387.571777	0
03/06/03	14:27:00	803.588867	2414.97803	983.961731	0	355.98053	579.193787	335.937469	918.765991	359.659821	360.644318	352.935913	137.878418	444.198883	387.571777	0
03/06/03	14:28:00	803.588867	2418.64014	1001.92297	0	355.98053	579.193787	335.937469	920.263855	359.659821	360.644318	352.935913	137.878418	444.198883	387.571777	0
03/06/03	14:29:00	803.588867	2418.64014	1002.47894	0	355.98053	579.193787	335.937469	920.263855	359.659821	360.644318	352.935913	137.878418	444.198883	387.571777	0
03/06/03	14:30:00	803.588867	2418.64014	987.773499	0	355.98053	579.193787	335.937469	920.263855	359.659821	360.644318	352.935913	137.878418	444.198883	387.571777	0
03/06/03	14:31:00	803.588867	2418.64014	981.239075	0	355.98053	579.193787	335.937469	920.263855	359.659821	360.644318	352.935913	137.878418	444.198883	387.571777	0
03/06/03	14:32:00	803.588867	2422.302	994.297485	0	355.98053	579.193787	335.937469	920.263855	359.659821	360.644318	352.935913	137.878418	444.198883	387.571777	0
03/06/03	14:33:00	803.588867	2422.302	1004.12433	0	355.98053	579.193787	335.937469	920.263855	359.659821	360.644318	352.935913	137.878418	444.198883	387.571777	0
03/06/03	14:34:00	803.588867	2422.302	991.041077	0	355.98053	579.193787	335.937469	920.263855	359.659821	360.644318	352.935913	137.878418	444.198883	387.571777	0
03/06/03	14:35:00	803.588867	2422.302	979.049805	0	355.98053	579.193787	335.937469	918.642517	359.659821	360.644318	352.935913	137.878418	444.198883	387.571777	0
03/06/03	14:36:00	803.588867	2414.97803	991.007385	0	355.98053	579.193787	335.937469	918.642517	359.659821	360.644318	352.935913	137.878418	444.198883	387.571777	0
03/06/03	14:37:00	803.588867	2422.302	1005.71375	0	355.98053	579.193787	335.937469	918.642517	359.659821	360.644318	352.935913	137.878418	444.198883	387.571777	0
03/06/03	14:38:00	803.588867	2422.302	992.630005	0	355.98053	579.193787	335.937469	918.642517	359.659821	360.644318	352.935913	137.878418	436.492126	387.571777	0
03/06/03	14:39:00	803.588867	2411.31592	981.171692	0	355.98053	579.193787	335.937469	918.642517	359.659821	360.644318	352.935913	137.878418	436.492126	387.571777	0
03/06/03	14:40:00	803.588867	2411.31592	986.038696	0	355.98053	579.193787	335.937469	918.642517	359.659821	360.644318	352.935913	137.878418	436.492126	387.571777	0
03/06/03	14:41:00	803.588867	2414.97803	1004.01202	0	355.98053	579.193787	335.937469	920.174072	359.659821	360.644318	352.935913	137.878418	436.492126	387.571777	0
03/06/03	14:42:00	803.588867	2414.97803	999.087097	0	355.98053	579.193787	335.937469	920.174072	359.659821	360.644318	352.935913	137.878418	436.492126	387.571777	0
03/06/03	14:43:00	803.588867	2410.40039	984.371399	0	355.98053	579.193787	335.937469	920.174072	359.659821	360.644318	352.935913	137.878418	436.492126	387.571777	0
03/06/03	14:44:00	803.588867	2406.73828	984.348938	0	355.98053	579.193787	335.937469	920.174072	359.659821	360.644318	352.935913	137.878418	436.492126	387.571777	0
03/06/03	14:45:00	803.588867	2410.40039	1002.31042	0	355.98053	579.193787	335.937469	921.73938	359.659821	360.644318	352.935913	137.878418	436.492126	387.571777	0
03/06/03	14:46:00	803.588867	2410.40039	1003.94458	0	355.98053	579.193787	335.937469	923.37207	359.659821	360.644318	352.935913	137.878418	436.492126	387.571777	0
03/06/03	14:47:00	803.588867	2417.72437	994.15155	0	355.98053	579.193787	335.937469	923.37207	359.659821	360.644318	352.935913	137.878418	436.492126	387.571777	0
03/06/03	14:48:00	803.588867	2428.71069	987.616333	0	355.98053	579.193787	335.937469	923.37207	359.659821	360.644318	352.935913	137.878418	436.492126	387.571777	0
03/06/03	14:49:00	803.588867	2428.71069	987.616333	0	355.98053	579.193787	335.937469	923.37207	359.659821	360.644318	352.935913	137.878418	436.492126	387.571777	0
03/06/03	14:50:00	803.588867	2432.3728	989.272644	0	355.98053	579.193787	335.937469	921.773132	359.659821	360.644318	352.935913	137.878418	436.492126	387.571777	0
03/06/03	14:51:00	803.588867	2432.3728	992.540161	0	355.98053	579.193787	335.937469	921.773132	359.659821	360.644318	352.935913	137.878418	436.492126	387.571777	0
03/06/03	14:52:00	803.588867	2433.28857	994.185242	0	355.98053	579.193787	335.937469	921.773132	359.659821	360.644318	352.935913	137.878418	436.492126	387.571777	0
03/06/03	14:53:00	803.588867	2429.62646	995.819153	0	355.98053	579.193787	335.937469	920.162964	359.659821	360.644318	352.935913	137.878418	436.492126	387.571777	0
03/06/03	14:54:00	803.588867	2429.62646	994.196472	0	355.98053	579.193787	335.937469	920.162964	359.659821	360.644318	352.935913	137.878418	436.492126	387.571777	0
03/06/03	14:55:00	803.588867	2425.96411	992.562622	0	355.98053	579.193787	335.937469	918.530396	359.659821	360.644318	352.935913	137.878418	428.787109	387.571777	0
03/06/03	14:56:00	803.588867	2425.96411	995.807922	0	355.98053	579.193787	335.937469	916.897644	359.659821	360.644318	352.935913	137.878418	428.787109	387.571777	0
03/06/03	14:57:00	803.588867	2421.38672	995.807922	0	355.98053	579.193787	335.937469	916.897644	359.659821	360.644318	352.935913	137.878418	428.787109	387.571777	0
03/06/03	14:58:00	813.659668	2410.40039	995.807922	0	355.98053	579.193787	335.937469	916.897644	359.659821	360.644318	352.935913	137.878418	428.787109	387.571777	0
03/06/03	14:59:00	813.659668	2410.40039	997.408325	0	355.98053	579.193787	335.937469	916.819092	359.659821	360.644318	352.935913	137.878418	428.787109	387.571777	0
03/06/03	15:00:00	813.659668	2399.41382	998.997314	0	355.98053	579.193787	325.866669	916.819092	359.659821	360.644318	352.935913	137.878418	428.787109	387.571777	0
03/06/03	15:01:00	813.659668	2400.32959	1003.86597	0	355.98053	579.193787	325.866669	918.395569	359.659821	360.644318	352.935913	137.878418	428.787109	387.571777	0
03/06/03	15:02:00	813.659668	2400.32959	1008.7464	0	355.98053	579.193787	325.866669	921.638367	359.659821	360.644318	352.935913	137.878418	428.787109	387.571777	0
03/06/03	15:03:00	813.659668	2403.9917	1011.9928	0	355.98053	579.193787	325.866669	923.248596	359.659821	360.644318	352.935913	137.878418	428.787109	387.571777	0
03/06/03	15:04:00	823.730469	2411.31592	1011.9928	0	355.98053	579.193787	325.866669	924.881226	359.659821	360.644318	352.935913	137.878418	428.787109	387.571777	0
03/06/03	15:05:00	823.730469	2414.97803	1011.98157	0	355.98053	579.193787	325.866669	924.881226	359.659821	360.644318	352.935913	137.878418	428.787109	387.571777	0
03/06/03	15:06:00	823.730469	2422.302	1010.32465	0	355.98053	579.193787	325.866669	926.480347	359.659821	360.644318	352.935913	137.878418	421.071228	387.571777	0
03/06/03	15:07:00	823.730469	2429.62646	1007.04462	0	355.98053	579.193787	325.866669	924.836365	359.659821	360.644318	352.935913	137.878418	421.071228	387.571777	0
03/06/03	15:08:00	823.730469	2433.28857	1007.04462	0	355.98053	579.193787	325.866669	924.836365	359.659821	360.644318	352.935913	137.878418	421.071228	387.571777	0
03/06/03	15:09:00	823.730469	2436.95044	1005.37671	0	355.98053	579.193787	325.866669	924.836365	359.659821	360.644318	352.935913	137.878418	421.071228	387.571777	0
03/06/03	15:10:00	823.730469	2436.95044	1003.74237	0	355.98053	579.193787	325.866669	923.169983	359.659821	360.644318	352.935913	137.878418	421.071228	387.571777	0
03/06/03	15:11:00	823.730469	2440.61255	1002.09686	0	355.98053	579.193787	325.866669	923.169983	359.659821	360.644318	352.935913	137.878418	421.071228	387.571777	0
03/06/03	15:12:00	823.730469	2436.95044	1000.44025	0	355.98053	579.193787	325.866669	921.526062	359.659821	360.644318	352.935913	137.878418	421.071228	387.571777	0
03/06/03	15:13:00	823.730469	2429.62646	998.794922	0	355.98053	579.193787	325.866669	919.859741	359.659821	360.644318	352.935913	137.878418	421.071228	387.571777	0
03/06/03	15:14:00	823.730469	2425.96411	998.794922	0	355.98053	579.193787	325.866669	918.227112	359.659821	360.644318	352.935913	137.878418	421.071228	387.571777	0
03/06/03	15:15:00	823.730469	2418.64014	998.794922	0	355.98053	579.193787	325.866669	918.227112	359.659821	360.644318	352.935913	137.878418	421.071228	387.571777	0

DATE	TIME	AETE055 BFBP Discharge Hdr Temp DEG F	AFPY044A DA Pegging Stm Valve PCT	ASFI006 Caulkins LP Stm Flow Output KPPH	ASFI016 Caulkins HP Stm Flow Output KPPH	MAJI002 Unit Megavars MVAR	MAJI004 Unit Megawatts MW	ADPT003C Absolute Cond Vac Calculated IN HGA	DALT004A Cooling Twr Basin Level IN	DAFI027 Cooling Twr Blow-Down Flow GPM	EAFI034 Cooling Twr Blow-Down SDA GPM	DATE014A Water Box Inlet A Temp DEG F	DATE014B Water Box Inlet B Temp DEG F	DATE016A Water Box Outlet A Temp DEG F	DATE016B Water Box Outlet B Temp DEG F	ABFI018 Main Steam Flow KPPH
03/06/03	14:15:00	253.002487	0	80.1037216	15.5219746	-2.3193359	221.984863	2.36450195	59.1357422	0	241.234268	81.6667023	81.57827	94.8447647	96.4917068	1360.83435
03/06/03	14:16:00	253.002487	0	82.3620453	15.3537607	-2.3193359	221.984863	2.36450195	59.1357422	0	237.959915	81.6667023	81.57827	94.8447647	96.4626007	1360.83435
03/06/03	14:17:00	253.002487	0	78.1879349	15.3537607	-2.3193359	221.984863	2.36450195	59.1357422	0	234.706543	81.6667023	80.1350098	94.8447647	95.0634613	1360.83435
03/06/03	14:18:00	253.002487	0	78.1879349	15.6384296	-2.3193359	221.984863	2.36450195	59.1357422	0	234.706543	81.6667023	80.1055145	94.8447647	96.4479599	1360.83435
03/06/03	14:19:00	253.002487	0	78.1879349	15.6384296	-2.3193359	221.984863	2.36450195	59.1357422	0	241.299286	81.6667023	81.5340652	94.8447647	95.0051346	1360.83435
03/06/03	14:20:00	253.002487	0	78.1879349	15.6384296	-2.3193359	221.984863	2.36450195	59.1357422	0	244.657028	81.6667023	81.4899139	94.8447647	94.9905472	1360.83435
03/06/03	14:21:00	253.002487	0	78.1879349	15.6384296	-2.3193359	221.984863	2.36450195	59.1357422	0	247.905838	81.6667023	81.4899139	94.8447647	94.9905472	1360.83435
03/06/03	14:22:00	253.002487	0	82.6557693	15.4807014	-2.3193359	221.984863	2.36450195	59.1357422	0	251.112473	81.6667023	81.4899139	94.8447647	94.9759445	1360.83435
03/06/03	14:23:00	253.002487	0	82.6557693	15.597271	-2.3193359	221.984863	2.36450195	59.1357422	0	254.340179	81.6667023	81.475174	94.8447647	94.9759445	1360.83435
03/06/03	14:24:00	253.002487	0	78.4088287	15.597271	-2.3193359	221.984863	2.36450195	59.1357422	0	257.588196	81.6667023	81.475174	94.8447647	96.3751602	1360.83435
03/06/03	14:25:00	253.002487	0	78.4088287	15.3280058	-2.3193359	221.984863	2.36450195	59.1357422	0	264.023285	81.6667023	81.475174	94.8447647	96.3751602	1360.83435
03/06/03	14:26:00	253.002487	0	78.4088287	15.3280058	-2.3193359	221.984863	2.36450195	59.1357422	0	267.329224	82.1300735	82.1300735	94.8447647	96.331398	1360.83435
03/06/03	14:27:00	253.002487	0	78.4088287	15.5185747	-2.3193359	221.984863	2.36450195	59.1357422	0	270.594604	82.1300735	80.6873779	94.8447647	96.331398	1360.83435
03/06/03	14:28:00	253.002487	0	78.4088287	15.1150169	-2.3193359	221.984863	2.36450195	59.1357422	0	267.387878	82.1153412	80.6873779	94.8447647	96.331398	1360.83435
03/06/03	14:29:00	253.002487	0	80.6482315	15.5869427	-2.3193359	221.984863	2.36450195	59.1357422	0	264.082672	82.0712051	80.6431961	94.8447647	96.3022842	1360.83435
03/06/03	14:30:00	253.002487	0	82.7267914	15.5869427	-2.3193359	221.984863	2.36450195	59.1357422	0	257.649078	82.0859375	82.0859375	94.8447647	96.2877045	1360.83435
03/06/03	14:31:00	253.002487	0	80.4314957	15.3581161	-2.3193359	221.984863	2.36450195	59.1357422	0	254.340179	82.1006622	82.1006622	94.8447647	96.3022842	1360.83435
03/06/03	14:32:00	253.002487	0	78.2695923	15.776022	-2.3193359	221.984863	2.36450195	59.1357422	0	250.987488	82.0859375	82.0859375	94.8447647	96.3022842	1360.83435
03/06/03	14:33:00	253.002487	0	78.2695923	15.150403	-2.3193359	221.984863	2.36450195	59.1357422	0	247.652588	82.0859375	82.1006622	94.8447647	96.3022842	1360.83435
03/06/03	14:34:00	253.002487	0	80.2888794	15.550951	-2.3193359	221.984863	2.36450195	59.1357422	0	237.893967	82.1006622	80.6580048	94.8447647	96.3022842	1360.83435
03/06/03	14:35:00	253.002487	0	80.2888794	15.4507551	-2.3193359	221.984863	2.36450195	59.1357422	0	231.407242	82.0859375	80.6285019	94.8447647	96.3022842	1360.83435
03/06/03	14:36:00	253.002487	0	80.2888794	15.6899204	-2.3193359	221.984863	2.36450195	59.1357422	0	224.802353	80.6285019	80.6285019	94.8447647	96.3022842	1360.83435
03/06/03	14:37:00	253.002487	0	80.2888794	15.6899204	-2.3193359	221.984863	2.36450195	59.1357422	0	218.284363	82.0565262	82.0565262	94.8447647	96.2585831	1360.83435
03/06/03	14:38:00	253.002487	0	78.2506866	15.4632711	-2.3193359	221.984863	2.36450195	59.1357422	0	215.023941	80.5990524	82.0271072	94.8447647	96.2585831	1360.83435
03/06/03	14:39:00	253.002487	0	78.2506866	15.4632711	-2.3193359	221.984863	2.36450195	59.1357422	0	208.575287	82.0418472	82.0418472	94.8447647	96.2585831	1360.83435
03/06/03	14:40:00	253.002487	0	78.2506866	15.6051464	-2.3193359	221.984863	2.36450195	59.1357422	0	205.312866	80.5990524	80.5990524	94.8447647	96.2585831	1360.83435
03/06/03	14:41:00	253.002487	0	78.2506866	15.6051464	-2.3193359	221.984863	2.36450195	59.1357422	0	205.312866	82.0271072	80.5843048	94.8447647	96.2585831	1360.83435
03/06/03	14:42:00	253.002487	0	84.6583939	15.6051464	-2.3193359	221.984863	2.36450195	59.1357422	0	205.312866	82.0124359	82.0124359	94.8447647	96.2585831	1360.83435
03/06/03	14:43:00	253.002487	0	84.6583939	15.6051464	-2.3193359	221.984863	2.36450195	59.1357422	0	202.075226	82.0124359	82.0124359	94.8010025	96.2585831	1360.83435
03/06/03	14:44:00	253.002487	0	77.2236481	15.6051464	-2.3193359	221.984863	2.36450195	59.1357422	0	195.518631	82.0124359	82.0124359	94.8010025	96.2585831	1360.83435
03/06/03	14:45:00	253.002487	0	77.2236481	15.6549711	-2.3193359	221.984863	2.36450195	59.1357422	0	188.982712	81.997757	81.997757	94.8010025	96.2585831	1360.83435
03/06/03	14:46:00	253.002487	0	82.0969086	15.6549711	-2.3193359	221.984863	2.36450195	59.1357422	0	182.38356	81.9830246	81.9830246	94.7864609	96.2585831	1360.83435
03/06/03	14:47:00	253.002487	0	82.0969086	15.6509399	-2.3193359	221.984863	2.36450195	59.1357422	0	172.646423	81.9830246	80.554924	94.7864609	96.2585831	1360.83435
03/06/03	14:48:00	253.002487	0	79.7916031	15.6509399	-2.3193359	221.984863	2.36450195	59.1357422	0	166.151443	81.9830246	81.997757	96.1858063	96.2585831	1360.83435
03/06/03	14:49:00	253.002487	0	79.7916031	15.6188583	-2.3193359	221.984863	2.36450195	59.1357422	0	156.302124	81.997757	81.9830856	94.7864609	96.2585831	1360.83435
03/06/03	14:50:00	253.002487	0	79.7916031	15.6188583	-2.3193359	221.984863	2.36450195	59.1357422	0	149.828766	81.997757	81.997757	94.7864609	96.2585831	1360.83435
03/06/03	14:51:00	253.002487	0	79.7916031	15.6188583	-2.3193359	221.984863	2.36450195	59.1357422	0	149.828766	80.5697327	81.997757	94.7719193	96.2585831	1360.83435
03/06/03	14:52:00	253.002487	0	81.882843	15.6188583	-2.3193359	221.984863	2.36450195	59.1357422	0	153.15123	81.997818	81.9830856	94.7719193	96.2585831	1360.83435
03/06/03	14:53:00	253.002487	0	81.882843	15.1532898	-2.3193359	221.984863	2.36450195	59.1357422	0	156.40271	81.997818	80.5402298	94.7719193	96.2585831	1360.83435
03/06/03	14:54:00	253.002487	0	81.882843	15.7849388	-2.3193359	221.984863	2.36450195	59.1357422	0	156.40271	81.997818	81.9683456	94.7719193	96.2585831	1360.83435
03/06/03	14:55:00	253.002487	0	79.0511398	15.7849388	-2.3193359	221.984863	2.36450195	59.1357422	0	159.686005	81.997818	80.5107803	94.7719193	96.2585831	1360.83435
03/06/03	14:56:00	253.002487	0	79.0511398	15.5921288	-2.3193359	221.984863	2.36450195	59.1357422	0	166.151443	81.997818	81.9536591	94.7719193	96.2585831	1360.83435
03/06/03	14:57:00	253.002487	0	79.0511398	15.5921288	-2.3193359	221.984863	2.36450195	59.1357422	0	166.151443	81.9536057	81.9389267	94.7719193	96.2585831	1360.83435
03/06/03	14:58:00	253.002487	0	83.3058624	15.393837	-2.3193359	221.984863	2.36450195	59.1357422	0	169.430252	81.9536057	81.9536591	94.7281494	96.2585831	1360.83435
03/06/03	14:59:00	253.002487	0	83.3058624	15.4003706	-2.3193359	221.984863	2.36450195	59.1357422	0	169.430252	81.9536591	81.9242401	96.1276093	96.2585831	1360.83435
03/06/03	15:00:00	253.002487	0	83.3058624	15.4003706	-2.3193359	216.949463	2.36450195	59.1357422	0	169.430252	81.9242401	81.9242401	94.7281494	96.2585831	1360.83435
03/06/03	15:01:00	253.002487	0	80.814064	15.5517302	-2.3193359	216.949463	2.36450195	59.1357422	0	169.430252	81.9242401	81.9095078	94.7281494	96.2585831	1360.83435
03/06/03	15:02:00	253.002487	0	78.7558594	15.4098616	-2.3193359	216.949463	2.36450195	59.1357422	0	172.646423	81.9242401	81.9095078	94.7281494	96.2585831	1360.83435
03/06/03	15:03:00	253.002487	0	78.7558594	15.4098616	-2.3193359	216.949463	2.36450195	59.1357422	0	175.892822	81.9242401	81.9095078	94.7281494	96.2585831	1360.83435
03/06/03	15:04:00	253.002487	0	78.7558594	15.4098616	-2.3193359	216.949463	2.36450195	59.1357422	0	179.16777	80.4813309	81.8948212	94.7281494	96.2585831	1360.83435
03/06/03	15:05:00	253.002487	0	83.3104172	15.57586	-2.3193359	216.949463	2.36450195	59.1357422	0	185.628006	81.9095078	81.8948212	94.7281494	96.2585831	1360.83435
03/06/03	15:06:00	253.002487	0	83.3104172	15.6118155	-2.3193359	216.949463	2.36450195	59.1357422	0	185.628006	81.9095078	81.8948212	94.7281494	96.2585831	1360.83435
03/06/03	15:07:00	253.002487	0	81.0075531	15.5811167	-2.3193359	216.949463	2.36450195	59.1357422	0	185.628006	81.9095078	81.8948212	94.7281494	96.2585831	1360.83435
03/06/03	15:08:00	253.002487	0	78.9844589	15.5811167	-2.3193359	216.949463	2.36450195	59.1357422	0	192.196884	81.8800812	81.8948212	94.7281494	96.2585831	1360.83435
03/06/03	15:09:00	253.002487	0	78.9844589	15.4237328	-2.3193359	216.949463	2.36450195	59.1357422	0	198.784592	81.8800812	81.8948212	94.7281494	96.2585831	1360.83435
03/06/03	15:10:00	253.002487	0	78.9844589	15.4237328	-2.3193359	216.949463	2.36450195	59.1357422	0	205.312866	81.8800812	81.8948212	94.7281494	96.2585831	1360.83435
03/06/03	15:11:00	253.002487	0	78.9844589	15.4949179	-2.3193359	216.949463	2.36450195	59.1357422	0	208.575287	81.8800812	81.8948212	94.7281494	96.2585831	1360.83435
03/06/03	15:12:00	253.002487	0	78.9844589	15.4949179	-2.3193359	216.949463	2.36450195	59.1357422	0	208.575287	81.8800812	81.8948212	94.7281494	96.2585831	1360.83435
03/06/03	15:13:00	253.002487	0	78.9844589	15.4949179	-2.3193359	216.949463	2.36450195	59.1357422	0	208.575287	81.8800812	81.8948212	94.7281494	96.2585831	1360.83435
03/06/03	15:14:00	253.002487	0	83.5118484	15.3753195	-2.3193359	216.949463	2.36450195	59.1357422	0	205.312866	81.8800812	81.8359222	94.7281494	96.2585831	1360.83435
03/06/03	15:15:00	253.002487	0	83.5118484	15.3753195	-2.3193359	216.949463	2.36450195	59.1357422	0	205.312866	81.8800812	81.8359222	94.7281494	96.2585831	1360.83435

DATE	TIME	MBEL100 Excitation Losses KW	BATI013 AH Gas Outlet Temp DEG F	BAAI046 Excess Oxygen PCT	RMAT500 Relative Humidity PCT	BATI011 AH Air Inlet Temp DEG F	JCFT152 Coal Fdr A Flow Rate KPPH	JCFT252 Coal Fdr B Flow Rate KPPH	JCFT352 Coal Fdr C Flow Rate KPPH	JCFT452 Coal Fdr D Flow Rate KPPH	NAET102 13.8 Kv NAA01 Aux Scr Volts VOLTS	NAET202 13.8 Kv NAAO2 Aux Scr Volts VOLTS	NAIT101 13.8 Kv NAAO1 Aux Scr Current AMPS	NAIT201 13.8 Kv NAA02 Aux Scr Current AMPS	MAII006A Generator Arm Current Phase A KA	MAII006B Generator Arm Current Phase B KA
03/06/03	14:15:00	587.671143	256.127533	3.87669611	7.13500881	107.465561	65.3527832	0.02685483	65.0170898	29.7692852	13995.4824	14231.6885	0.29296178	-1.1718806	5.16503906	5.26269484
03/06/03	14:16:00	587.671143	256.127533	4.12856054	5.02929735	107.465561	60.5859375	0.02685483	58.5717735	29.6685753	13995.4824	14231.6885	0.29296178	-1.1718806	5.16503906	5.26269484
03/06/03	14:17:00	587.671143	256.127533	4.38788033	6.03637695	107.465561	65.8563232	0.02685483	65.0842285	29.8028545	13995.4824	14231.6885	0.29296178	-1.1718806	5.16503906	5.26269484
03/06/03	14:18:00	587.671143	256.127533	4.12622452	3.93066263	107.465561	68.8439865	0.02685483	66.3934326	29.8028545	13995.4824	14231.6885	0.29296178	-1.1718806	5.16503906	5.26269484
03/06/03	14:19:00	587.671143	256.127533	3.87226057	5.09033108	107.465561	64.9835205	0.02685483	64.1778564	30.1385498	13995.4824	14231.6885	0.29296178	-1.1718806	5.16503906	5.26269484
03/06/03	14:20:00	587.671143	256.127533	4.1345129	6.21948099	107.465561	63.8421593	0.02685483	63.1036377	29.4335899	13995.4824	14231.6885	0.29296178	-1.1718806	5.16503906	5.26269484
03/06/03	14:21:00	587.671143	256.127533	4.1345129	5.15136766	107.465561	62.2644043	0.02685483	61.6601563	29.366457	13995.4824	14231.6885	0.29296178	-1.1718806	5.16503906	5.26269484
03/06/03	14:22:00	587.671143	256.127533	4.38713408	7.34863091	107.465561	69.8510742	0.02685483	70.2874756	29.366457	13995.4824	14231.6885	0.29296178	-1.1718806	5.16503906	5.26269484
03/06/03	14:23:00	587.671143	256.127533	3.88247013	9.91210842	107.465561	68.9782715	0.02685483	68.1726074	29.4671612	13995.4824	14231.6885	0.29296178	-1.1718806	5.16503906	5.26269484
03/06/03	14:24:00	587.671143	256.127533	3.88247013	7.50121975	107.465561	64.4799805	0.02685483	63.4057617	30.1049805	13995.4824	14231.6885	0.29296178	-1.1718806	5.16503906	5.26269484
03/06/03	14:25:00	587.671143	256.127533	4.40835094	6.49413967	107.465561	68.2061768	0.02685483	69.1461182	30.239254	13995.4824	14231.6885	0.29296178	-1.1718806	5.16503906	5.26269484
03/06/03	14:26:00	587.671143	256.127533	4.15553904	8.53881741	107.465561	70.791008	0.02685483	69.6832199	30.239254	13995.4824	14231.6885	0.29296178	-1.1718806	5.16503906	5.26269484
03/06/03	14:27:00	587.671143	256.127533	3.88920379	9.91210842	107.465561	70.0860596	0.02685483	70.6903076	30.2728233	13995.4824	14231.6885	0.29296178	-1.1718806	5.16503906	5.26269484
03/06/03	14:28:00	587.671143	256.127533	3.88920379	6.46362162	107.465561	62.1301231	0.02685483	61.6601563	30.0042706	13995.4824	14231.6885	0.29296178	-1.1718806	5.16503906	5.26269484
03/06/03	14:29:00	587.671143	256.127533	4.13956261	5.2734375	107.465561	67.8704834	0.02685483	67.6019287	30.2056904	13995.4824	14231.6885	0.29296178	-1.1718806	5.16503906	5.26269484
03/06/03	14:30:00	587.671143	256.127533	4.13956261	6.46362162	107.465561	70.2539063	0.02685483	68.1726074	30.2056904	13995.4824	14231.6885	0.29296178	-1.1718806	5.16503906	5.26269484
03/06/03	14:31:00	587.671143	256.127533	3.86714625	7.50121975	107.465561	69.9182053	0.02685483	69.6160889	29.7692852	13995.4824	14231.6885	0.29296178	-1.1718806	5.16503906	5.26269484
03/06/03	14:32:00	587.671143	256.127533	3.86714625	7.50121975	107.465561	62.9357872	0.02685483	62.3651085	29.7692852	13995.4824	14231.6885	0.29296178	-1.1718806	5.16503906	5.26269484
03/06/03	14:33:00	587.671143	256.127533	4.12534666	7.50121975	107.465561	65.2856445	0.02685483	63.6071739	29.4335899	13995.4824	14231.6885	0.29296178	-1.1718806	5.16503906	5.26269484
03/06/03	14:34:00	587.671143	256.127533	4.39816332	8.66088772	107.465561	68.0718994	0.02685483	67.5683594	29.4335899	13995.4824	14231.6885	0.29296178	-1.1718806	5.16503906	5.26269484
03/06/03	14:35:00	587.671143	256.127533	4.14306831	8.72192478	107.465561	67.8369141	0.02685483	68.2397385	29.5343018	13995.4824	14231.6885	0.29296178	-1.1718806	5.16503906	5.26269484
03/06/03	14:36:00	587.671143	256.127533	3.87944984	6.67724657	107.465561	71.5966721	0.02685483	71.4959717	29.7021446	13995.4824	14231.6885	0.29296178	-1.1718806	5.16503906	5.26269484
03/06/03	14:37:00	587.671143	256.127533	3.87944984	5.15136766	107.465561	65.2520752	0.02685483	64.7149658	29.5678711	13995.4824	14231.6885	0.29296178	-1.1718806	5.16503906	5.26269484
03/06/03	14:38:00	587.671143	256.127533	4.39045095	4.083251	107.465561	64.8492432	0.02685483	62.4658165	29.5678711	13995.4824	14231.6885	0.29296178	-1.1718806	5.16503906	5.26269484
03/06/03	14:39:00	587.671143	256.127533	4.13062525	6.18896294	107.465561	73.5101318	0.02685483	73.3422852	29.6014404	13995.4824	14231.6885	0.29296178	-1.1718806	5.16503906	5.26269484
03/06/03	14:40:00	587.671143	256.127533	3.6147809	4.14428759	107.465561	72.4359055	0.02685483	72.8051758	29.7021446	13995.4824	14231.6885	0.29296178	-1.1718806	5.16503906	5.26269484
03/06/03	14:41:00	587.671143	256.127533	3.6147809	4.14428759	107.465561	65.8227539	0.02685483	66.3262863	30.172121	13995.4824	14231.6885	0.29296178	-1.1718806	5.16503906	5.26269484
03/06/03	14:42:00	587.671143	256.127533	4.12017155	4.14428759	107.465561	66.3934326	0.02685483	66.3262863	30.172121	13995.4824	14231.6885	0.29296178	-1.1718806	5.16503906	5.26269484
03/06/03	14:43:00	587.671143	256.127533	4.12017155	5.18188286	107.465561	75.5578537	0.02685483	74.0136719	29.2657471	13995.4824	14231.6885	0.29296178	-1.1718806	5.16503906	5.26269484
03/06/03	14:44:00	587.671143	256.127533	3.86342144	7.37914944	107.465561	76.0613937	0.02685483	74.2822266	30.1049805	13995.4824	14231.6885	0.29296178	-1.1718806	5.16503906	5.26269484
03/06/03	14:45:00	587.671143	256.127533	3.86342144	5.33447123	107.465561	68.5754395	0.02685483	68.8439865	28.9971924	13995.4824	14231.6885	0.29296178	-1.1718806	5.16503906	5.26269484
03/06/03	14:46:00	587.671143	256.127533	4.12434769	6.37206936	107.465561	68.9447021	0.02685483	72.2344971	30.1385498	13995.4824	14231.6885	0.29296178	-1.1718806	5.16503906	5.26269484
03/06/03	14:47:00	587.671143	256.127533	4.12434769	6.37206936	107.465561	66.2255859	0.02685483	65.7556076	29.2657471	13995.4824	14231.6885	0.29296178	-1.1718806	5.16503906	5.26269484
03/06/03	14:48:00	587.671143	256.127533	4.12434769	6.37206936	107.465561	62.7679405	0.02685483	61.5930138	29.9035664	13995.4824	14231.6885	0.29296178	-1.1718806	5.16503906	5.26269484
03/06/03	14:49:00	587.671143	256.127533	4.12434769	6.37206936	107.465561	62.4322472	0.02685483	65.7891846	29.1986065	13995.4824	14231.6885	0.29296178	-1.1718806	5.16503906	5.26269484
03/06/03	14:50:00	587.671143	256.127533	4.12434769	5.18188286	107.465561	62.6672325	0.02685483	62.532959	29.1986065	13995.4824	14231.6885	0.29296178	-1.1718806	5.16503906	5.26269484
03/06/03	14:51:00	587.671143	256.127533	4.12434769	5.18188286	107.465561	58.7060547	0.02685483	58.7731895	29.4671612	13995.4824	14231.6885	0.29296178	-1.1718806	5.16503906	5.26269484
03/06/03	14:52:00	587.671143	256.127533	4.37827015	6.37206936	107.465561	61.8951378	0.02685483	61.3580284	29.1986065	13995.4824	14231.6885	0.29296178	-1.1718806	5.16503906	5.26269484
03/06/03	14:53:00	587.671143	256.127533	4.12153244	5.36498976	107.465561	64.6478195	0.02685483	65.1849289	30.239254	13995.4824	14231.6885	0.29296178	-1.1718806	5.16503906	5.26269484
03/06/03	14:54:00	587.671143	256.127533	4.12104845	7.44018602	107.465561	64.0435715	0.02685483	64.7149658	30.239254	13995.4824	14231.6885	0.29296178	-1.1718806	5.16503906	5.26269484
03/06/03	14:55:00	587.671143	256.127533	4.12104845	7.50121975	107.465561	62.9357872	0.02685483	62.1301231	30.2056904	13995.4824	14231.6885	0.29296178	-1.1718806	5.16503906	5.26269484
03/06/03	14:56:00	587.671143	256.127533	4.12104845	7.50121975	107.465561	64.6813965	0.02685483	64.7485352	30.0042706	13995.4824	14231.6885	0.29296178	-1.1718806	5.16503906	5.26269484
03/06/03	14:57:00	587.671143	256.127533	4.12104845	8.53881741	107.465561	65.0506592	0.02685483	65.2856445	29.366457	13995.4824	14231.6885	0.29296178	-1.1718806	5.16503906	5.26269484
03/06/03	14:58:00	587.671143	256.127533	4.12104845	7.40966749	107.465561	71.126709	0.02685483	71.227417	29.366457	13995.4824	14231.6885	0.29296178	-1.1718806	5.16503906	5.26269484
03/06/03	14:59:00	587.671143	256.127533	4.12104845	8.59985447	107.465561	69.5153809	0.02685483	69.7167969	29.5343018	13995.4824	14231.6885	0.29296178	-1.1718806	5.16503906	5.26269484
03/06/03	15:00:00	587.671143	256.127533	4.12104845	8.59985447	107.465561	78.7133789	0.02685483	78.9147873	30.1385498	13995.4824	14231.6885	0.29296178	-1.1718806	5.16503906	5.26269484
03/06/03	15:01:00	587.671143	256.127533	3.86641932	8.59985447	107.465561	74.987175	0.02685483	74.0472412	29.5343018	13995.4824	14231.6885	0.29296178	-1.1718806	5.16503906	5.26269484
03/06/03	15:02:00	587.671143	256.127533	3.61184454	8.59985447	107.465561	73.4094238	0.02685483	73.8458176	29.5343018	13995.4824	14231.6885	0.29296178	-1.1718806	5.16503906	5.26269484
03/06/03	15:03:00	587.671143	256.127533	3.61184454	8.69140625	107.465561	73.6779785	0.02685483	72.9394531	30.3063946	13995.4824	14231.6885	0.29296178	-1.1718806	5.16503906	5.26269484
03/06/03	15:04:00	587.671143	256.127533	3.86567831	8.72192478	107.465561	68.5754395	0.02685483	69.4146729	29.8028545	13995.4824	14231.6885	0.29296178	-1.1718806	5.16503906	5.26269484
03/06/03	15:05:00	587.671143	256.127533	3.86567831	8.72192478	107.465561	66.1584473	0.02685483	66.4605713	29.5007305	13995.4824	14231.6885	0.29296178	-1.1718806	5.16503906	5.26269484
03/06/03	15:06:00	587.671143	256.127533	4.11871481	10.8581543	107.465561	64.6478195	0.02685483	64.2785645	29.5007305	13995.4824	14231.6885	0.29296178	-1.1718806	5.16503906	5.26269484
03/06/03	15:07:00	587.671143	256.127533	4.11871481	5.60912991	107.465561	60.3845215	0.02685483	59.5785536	29.366457	13995.4824	14231.6885	0.29296178	-1.1718806	5.16503906	5.26269484
03/06/03	15:08:00	587.671143	256.127533	4.36966085	5.60912991	107.465561	58.6053467	0.02685483	57.6989708	30.3063946	13995.4824	14231.6885	0.29296178	-1.1718806	5.16503906	5.26269484
03/06/03	15:09:00	587.671143	256.127533	4.36966085	7.62328959	107.465561	57.0275879	0.02685483	58.034668	29.9035664	13995.4824	14231.6885	0.29296178	-1.1718806	5.16503906	5.26269484
03/06/03	15:10:00	587.671143	256.127533	4.62189674	7.62328959	107.465561	62.3651085	0.02685483	59.8138428	28.6614971	13995.4824	14231.6885	0.29296178	-1.1718806	5.16503906	5.26269484
03/06/03	15:11:00	587.671143	256.127533	4.09067297	7.62328959	107.465561	54.9127159	0.02685483	55.7519493	29.3328876	13995.4824	14231.6885	0.29296178	-1.1718806	5.16503906	5.26269484
03/06/03	15:12:00	587.671143	256.127533	4.5955348	7.62328959	107.465561	61.2908897	0.02685483	58.5382042	29.9706993	13995.4824	14231.6885	0.29296178	-1.1718806	5.16503906	5.26269484
03/06/03	15:13:00	587.671143	256.127533	4.34112406	7.62328959	107.465561	62.7343712	0.02685483	61.2237549	29.5343018	13995.4824	14231.6885	0.29296178	-1.1718806	5.16503906	5.26269484
03/06/03	15:14:00	587.671143	256.127533	4.59118891	8.63036919	107.465561	66.1920166	0.02685483	66.1920166	30.1385498	13995.4824	14231.6885	0.29296178	-1.1718806	5.16503906	5.26269484
03/06/03	15:15:00	587.671143	256.127533	4.33780956	10.9191875	107.465561	67.6019287	0.02685483	67.7362061	29.93713	13995.4824	14231.6885	0.29296178	-1.1718806	5.16503906	5.26269484

DATE	TIME	MAII006C Generator Arm Current Phase C KA	RMTT500 Ambient Temp DEG F	ADFI001 Cond Xfer Flow Calculated KPPH	ADLT001 Condenser Hotwell Level IN	TSTMFLO Total Stm Flow KPPH	BAFI002 Total Air Flow KPPH	REAI001 CEMS CO2 %	BAAI052 Boiler CO PPM	BATE055 SCR Outlet Temp. DEG F	BATI020 AH Air Outlet Temp. DEG F		AEFY136 Fisher FW Valve Demand %		
03/06/03	14:15:00	5.47753906	87.2680664	131.103424	47.7685509	1361.43738	2269.96606	11.3879385	0	627.918213	549.849731	0	42.7325783	160.166013	
03/06/03	14:16:00	5.47753906	87.2680664	133.078766	47.7685509	1361.43738	2231.69434	11.394042	0	627.918213	549.849731	0	42.7325783	148.853141	
03/06/03	14:17:00	5.47753906	87.2680664	119.82959	47.7685509	1361.43738	2231.69434	11.8884277	0	627.918213	549.849731	0	41.5658531	160.770261	
03/06/03	14:18:00	5.47753906	87.2680664	119.139984	47.7685509	1361.43738	2231.69434	11.6870117	0	627.918213	549.849731	0	41.5658531	165.067128	
03/06/03	14:19:00	5.47753906	87.2680664	128.991455	47.7685509	1361.43738	2231.69434	11.3818359	0	627.918213	549.849731	0	41.4675102	159.326782	
03/06/03	14:20:00	5.47753906	87.2680664	134.821655	47.7685509	1361.43738	2232.86548	11.4855957	0	627.918213	549.849731	0	42.5049744	156.406242	
03/06/03	14:21:00	5.47753906	87.2680664	115.748978	47.7685509	1361.43738	2232.86548	11.6870117	0	627.918213	549.849731	0	41.4959183	153.317872	
03/06/03	14:22:00	5.47753906	87.2680664	114.676216	47.7685509	1361.43738	2232.86548	11.6870117	0	627.918213	549.849731	0	41.4959183	169.531862	
03/06/03	14:23:00	5.47753906	87.2680664	128.244034	47.7685509	1361.43738	2268.29712	11.4916983	0	627.918213	549.849731	0	42.6353226	166.644895	
03/06/03	14:24:00	5.47753906	87.2680664	133.490906	47.7685509	1361.43738	2233.04272	11.4855957	0	627.918213	549.849731	0	42.6353226	158.017577	
03/06/03	14:25:00	5.47753906	87.2680664	127.276627	47.7685509	1361.43738	2233.04272	11.6870117	0	627.918213	549.849731	0	41.5822754	167.618404	
03/06/03	14:26:00	5.47753906	87.2680664	125.100044	47.7685509	1361.43738	2233.04272	11.6931143	0	627.918213	549.849731	0	41.5822754	170.740337	
03/06/03	14:27:00	5.47753906	87.2680664	133.696503	47.7685509	1361.43738	2233.04272	11.4916983	0	627.918213	549.849731	0	41.5822754	171.076045	
03/06/03	14:28:00	5.47753906	87.2680664	136.139389	47.7685509	1361.43738	2233.04272	11.6931143	0	627.918213	549.849731	0	41.5822754	153.821405	
03/06/03	14:29:00	5.47753906	87.2680664	124.990242	47.7685509	1361.43738	2233.04272	11.6931143	0	627.918213	549.849731	0	41.5822754	165.704957	
03/06/03	14:30:00	5.47753906	87.2680664	118.330368	47.7685509	1361.43738	2233.04272	11.8884277	0	627.918213	549.849731	0	41.5821686	168.659059	
03/06/03	14:31:00	5.47753906	87.2680664	118.098022	47.7685509	1361.43738	2233.04272	11.4916983	0	627.918213	549.849731	0	41.5701065	169.330434	
03/06/03	14:32:00	5.47753906	87.2680664	132.768829	47.7685509	1361.43738	2270.88452	11.4916983	0	627.918213	549.849731	0	41.5701065	155.097036	
03/06/03	14:33:00	5.47753906	87.2680664	117.398247	47.7685509	1361.43738	2230.41602	11.5893555	0	627.918213	549.849731	0	41.4478989	158.353263	
03/06/03	14:34:00	5.47753906	87.2680664	112.255592	47.7685509	1361.43738	2266.56763	11.5893555	0	627.918213	549.849731	0	41.4478989	165.100704	
03/06/03	14:35:00	5.47753906	87.2680664	110.777832	47.7685509	1361.43738	2231.95215	11.4916983	0	627.918213	549.849731	0	41.4478989	165.637809	
03/06/03	14:36:00	5.47753906	87.2680664	112.255592	47.7685509	1361.43738	2231.95215	11.2902822	0	627.918213	549.849731	0	42.4955292	172.821643	
03/06/03	14:37:00	5.47753906	87.2680664	106.994179	48.2519531	1361.43738	2231.95215	11.4916983	0	627.918213	549.849731	0	42.4955292	159.561767	
03/06/03	14:38:00	5.47753906	87.2680664	93.5740509	48.2519531	1361.43738	2231.95215	11.784668	0	627.918213	549.849731	0	41.404995	156.909786	
03/06/03	14:39:00	5.47753906	87.2680664	94.013298	48.2519531	1361.43738	2231.95215	11.7907715	0	627.918213	549.849731	0	40.5933952	176.480712	
03/06/03	14:40:00	5.47753906	87.2680664	113.714149	48.2519531	1361.43738	2231.95215	11.1804199	0	627.918213	549.849731	0	41.5984116	174.970081	
03/06/03	14:41:00	5.47753906	87.2680664	109.781616	48.2519531	1361.43738	2229.99023	11.3879385	0	627.918213	549.849731	0	42.6298485	162.348016	
03/06/03	14:42:00	5.47753906	87.2680664	110.405304	48.2519531	1361.43738	2229.99023	11.4916983	0	627.918213	549.849731	0	41.5412254	162.918695	
03/06/03	14:43:00	5.47753906	87.2680664	112.255592	48.2519531	1361.43738	2229.99023	11.7907715	0	627.918213	549.849731	0	41.5412254	178.864127	
03/06/03	14:44:00	5.47753906	87.2680664	113.834854	47.7392578	1361.43738	2229.99023	11.5893555	0	627.918213	549.849731	0	41.565033	180.475456	
03/06/03	14:45:00	5.47753906	87.2680664	116.811897	47.7392578	1361.43738	2264.75879	11.3879385	0	627.918213	549.849731	0	41.565033	166.443473	
03/06/03	14:46:00	5.47753906	87.2680664	114.676216	47.7392578	1361.43738	2227.33521	11.6870117	0	627.918213	549.849731	0	40.5175438	171.344604	
03/06/03	14:47:00	5.47753906	87.2680664	111.149109	47.7392578	1361.43738	2264.57617	11.8945313	0	627.918213	549.849731	0	39.4933472	161.273795	
03/06/03	14:48:00	5.47753906	87.2680664	112.987228	47.7392578	1361.43738	2262.38501	11.4916983	0	627.918213	549.849731	0	40.517601	154.291375	
03/06/03	14:49:00	5.47753906	87.2680664	112.621994	47.7392578	1361.43738	2262.38501	11.4916983	0	627.918213	549.849731	0	41.5690651	157.446893	
03/06/03	14:50:00	5.47753906	87.2680664	111.39595	47.7392578	1361.43738	2262.38501	11.6870117	0	627.918213	549.849731	0	42.7113953	154.425653	
03/06/03	14:51:00	5.47753906	87.2680664	108.143173	47.7392578	1361.43738	2262.38501	11.5893555	0	627.918213	549.849731	0	42.7113953	146.97326	
03/06/03	14:52:00	5.47753906	87.2680664	113.230049	47.7392578	1361.43738	2262.38501	11.5893555	0	627.918213	549.849731	0	41.627037	152.478628	
03/06/03	14:53:00	5.47753906	87.2680664	110.777832	47.7392578	1361.43738	2262.38501	11.3879385	0	627.918213	549.849731	0	41.627037	160.098857	
03/06/03	14:54:00	5.47753906	87.2680664	115.986031	47.7392578	1361.43738	2262.38501	11.5893555	0	627.918213	549.849731	0	42.6764908	159.024646	
03/06/03	14:55:00	5.47753906	87.2680664	110.653793	47.7392578	1361.43738	2216.67749	11.3879385	0	627.918213	549.849731	0	42.6764908	155.298456	
03/06/03	14:56:00	5.47753906	87.2680664	123.219742	47.7392578	1361.43738	2252.25317	11.3879385	0	627.918213	549.849731	0	41.6282768	159.461057	
03/06/03	14:57:00	5.47753906	87.2680664	128.884933	47.2558594	1361.43738	2217.53516	11.3879385	0	627.918213	549.849731	0	41.6356926	159.729616	
03/06/03	14:58:00	5.47753906	87.2680664	132.872223	47.2558594	1361.43738	2221.55322	11.5893555	0	627.918213	549.849731	0	41.7116508	171.747438	
03/06/03	14:59:00	5.47753906	87.2680664	134.209106	47.2558594	1361.43738	2268.04077	11.3879385	0	627.918213	549.849731	0	41.8193016	168.793334	
03/06/03	15:00:00	5.47753906	87.2680664	129.31044	47.2558594	1361.43738	2230.82422	11.394042	0	627.918213	549.849731	0	41.8034363	187.793571	
03/06/03	15:01:00	5.47753906	87.2680664	139.231384	46.7724609	1361.43738	2225.90479	11.394042	0	627.918213	549.849731	0	41.7765045	178.595573	
03/06/03	15:02:00	5.47753906	87.2680664	142.545471	46.7724609	1361.43738	2225.71899	11.394042	0	627.918213	549.849731	0	41.7938042	176.816398	
03/06/03	15:03:00	5.47753906	87.2680664	135.9375	46.7724609	1361.43738	2225.71899	11.595458	0	627.918213	549.849731	0	40.7744217	176.950681	
03/06/03	15:04:00	5.47753906	87.2680664	132.250641	46.7724609	1361.43738	2225.71899	11.796874	0	627.918213	549.849731	0	39.5330887	167.819822	
03/06/03	15:05:00	5.47753906	87.2680664	139.033951	46.7724609	1361.43738	2260.7854	11.796874	0	627.918213	549.849731	0	39.5330887	162.146604	
03/06/03	15:06:00	5.47753906	87.2680664	126.301819	47.2558594	1361.43738	2260.7854	11.796874	0	627.918213	549.849731	0	40.5883865	158.453969	
03/06/03	15:07:00	5.47753906	87.2680664	113.834854	47.7392578	1361.43738	2260.7854	11.5893555	0	627.918213	549.849731	0	40.5883865	149.356687	
03/06/03	15:08:00	5.47753906	87.2680664	114.915474	47.7392578	1361.43738	2260.7854	11.5893555	0	627.918213	549.849731	0	41.6081047	146.637567	
03/06/03	15:09:00	5.47753906	87.2680664	112.987228	47.7392578	1361.43738	2260.7854	11.4916983	0	627.918213	549.849731	0	41.6081047	144.992677	
03/06/03	15:10:00	5.47753906	87.2680664	116.104362	47.7392578	1361.43738	2260.7854	11.4916983	0	627.918213	549.849731	0	41.6081047	150.867303	
03/06/03	15:11:00	5.47753906	87.2680664	117.281204	47.7392578	1361.43738	2260.7854	11.2841797	0	627.918213	549.849731	0	41.6081047	140.024408	
03/06/03	15:12:00	5.47753906	87.2680664	113.955429	47.7392578	1361.43738	2260.7854	11.2841797	0	627.918213	549.849731	0	42.632618	149.826648	
03/06/03	15:13:00	5.47753906	87.2680664	125.100044	47.2558594	1361.43738	2260.7854	11.3879385	0	627.918213	549.849731	0	41.6050224	153.519283	
03/06/03	15:14:00	5.47753906	87.2680664	134.923477	47.2558594	1361.43738	2260.7854	11.3879385	0	627.918213	549.849731	0	42.8286133	162.549438	
03/06/03	15:15:00	5.47753906	87.2680664	132.872223	47.2558594	1361.43738	2260.7854	11.3879385	0	627.918213	549.849731	0	41.7455788	165.30212	

		MAJI007	MAJI008	NAJT101	NAJT201	AEFI135	AEFI131	FDFI002	FDFI022	AAFY018A	FBFI021	AETE137	AAPTOO6	FDPT002	FDTT002	FDPT022
		Generator	Generator	13.8 kv	13.8 kv	FW Flow	SH Spray	Sootblower	SCR	Cont.	MS to Aux	Feedwater	Selected	Sootblower	Sootblower	A.H.
		Megawatts	Megavars	NAA01 Gen	NAA02 Gen	Comp.	Flow	Steam	Sootblower	Blowdown	Stm. Flow	Temp.	Drum	Steam	Steam	Sootblower
				Aux Load	Aux Load			Flow	Stm Flow	Flow			Pressure	Pressure	Temp.	Stm. Press
DATE	TIME	MW	MVAR	MW	MW	KPPH	KPPH	KPPH	KPPH	PCT	KPPH	DEG F	PSIG	PSIG	DEG F	PSIG
03/06/03	15:16:00	216.186508	12.2619543	14.1430655	7.76184082	1413.7262	53.0331154	8.45771885	1.95849788	0	0	366.113068	2511.99341	311.218231	720.275879	380.493164
03/06/03	15:17:00	216.186508	12.2619543	14.1430655	8.07312012	1443.84106	41.4465866	8.0146513	1.95849788	0	0	366.113068	2476.74561	321.289032	730.34668	380.493164
03/06/03	15:18:00	216.186508	12.2619543	14.1430655	8.07312012	1405.37134	41.9514542	7.55908775	1.95849788	0	0	366.113068	2476.74561	321.289032	730.34668	380.493164
03/06/03	15:19:00	216.186508	12.2619543	14.1430655	8.07312012	1405.37134	66.4262314	7.61151791	1.95849788	0	0	366.113068	2476.74561	321.289032	740.41748	380.493164
03/06/03	15:20:00	216.186508	12.2619543	14.1430655	8.07312012	1405.37134	42.9433746	7.3776474	1.95849788	0	0	366.113068	2476.74561	321.289032	750.488281	380.493164
03/06/03	15:21:00	216.186508	12.2619543	14.1430655	8.07312012	1374.95862	63.8405571	7.3776474	1.95849788	0	0	366.113068	2476.74561	321.289032	760.559082	380.493164
03/06/03	15:22:00	216.186508	12.2619543	14.1430655	8.07312012	1343.3075	64.1694717	7.17712927	1.95849788	0	0	366.113068	2476.74561	321.289032	770.629883	380.493164
03/06/03	15:23:00	216.186508	12.2619543	14.1430655	8.05480957	1343.3075	60.1039085	0	1.95849788	0	0	366.113068	2476.74561	337.768555	770.629883	380.493164
03/06/03	15:24:00	216.186508	12.2619543	14.1430655	8.05480957	1343.3075	54.9820862	0	1.95849788	0	0	366.113068	2476.74561	317.321777	770.629883	380.493164
03/06/03	15:25:00	216.186508	12.2619543	14.1430655	8.05480957	1343.3075	66.7424088	0	1.95849788	0	0	366.113068	2476.74561	317.321777	770.629883	380.493164
03/06/03	15:26:00	216.186508	12.2619543	14.1430655	8.05480957	1343.3075	66.7424088	0	1.95849788	0	0	366.113068	2476.74561	317.321777	760.559082	380.493164
03/06/03	15:27:00	216.186508	12.2619543	14.1430655	7.7435298	1343.3075	66.1085434	0	1.95849788	0	0	366.113068	2511.99341	317.321777	760.559082	380.493164
03/06/03	15:28:00	216.186508	12.2619543	14.1430655	8.09142971	1373.41638	56.8642921	0	1.95849788	0	0	366.113068	2511.99341	317.321777	760.559082	380.493164
03/06/03	15:29:00	216.186508	12.2619543	14.1430655	8.09142971	1403.74573	66.4262314	0	1.95849788	0	0	366.113068	2511.99341	317.321777	760.559082	380.493164
03/06/03	15:30:00	216.186508	12.2619543	14.1430655	7.78015184	1403.74573	54.9820862	0	1.95849788	0	0	366.113068	2511.99341	317.321777	750.488281	380.493164
03/06/03	15:31:00	216.186508	12.2619543	14.1430655	8.11889553	1403.74573	57.5999374	0	1.95849788	0	0	366.113068	2511.99341	317.321777	750.488281	380.493164
03/06/03	15:32:00	216.186508	12.2619543	14.1430655	8.11889553	1434.94397	58.3263397	0	1.95849788	0	0	366.113068	2511.99341	317.321777	750.488281	380.493164
03/06/03	15:33:00	216.186508	12.2619543	14.1430655	7.78930569	1434.94397	46.2477722	0	1.95849788	0	0	366.113068	2511.99341	317.321777	740.41748	380.493164
03/06/03	15:34:00	216.186508	12.2619543	14.1430655	8.09142971	1403.03247	66.4262314	0	1.952003	0	0	366.113068	2511.99341	317.321777	740.41748	380.493164
03/06/03	15:35:00	216.186508	12.2619543	14.1430655	7.78930569	1403.03247	41.4465866	0	1.952003	0	0	366.113068	2511.99341	317.321777	740.41748	380.493164
03/06/03	15:36:00	216.186508	12.2619543	14.1430655	7.78930569	1403.03247	48.03405	0	1.952003	0	0	366.113068	2476.74561	317.321777	740.41748	380.493164
03/06/03	15:37:00	216.186508	12.2619543	14.1430655	7.78930569	1433.37256	66.4262314	7.66037798	1.952003	0	0	366.113068	2476.74561	310.60788	740.41748	380.493164
03/06/03	15:38:00	216.186508	12.2619543	14.1430655	8.10974026	1371.22998	54.597847	6.90875149	1.952003	0	0	366.113068	2476.74561	320.67868	750.488281	380.493164
03/06/03	15:39:00	216.186508	12.2619543	14.1430655	8.05480957	1371.22998	68.3012924	6.9109869	1.952003	0	0	366.113068	2476.74561	320.67868	760.559082	380.493164
03/06/03	15:40:00	216.186508	12.2619543	14.1430655	8.05480957	1339.20764	56.4928627	6.9109869	1.952003	0	0	366.113068	2476.74561	320.67868	770.629883	380.493164
03/06/03	15:41:00	216.186508	12.2619543	14.1430655	8.05480957	1339.20764	74.7752686	6.9109869	1.952003	0	0	366.113068	2476.74561	320.67868	780.700684	380.493164
03/06/03	15:42:00	216.186508	12.2619543	14.1430655	8.05480957	1339.20764	72.7778702	6.9109869	1.952003	0	0	366.113068	2476.74561	320.67868	780.700684	380.493164
03/06/03	15:43:00	216.186508	12.2619543	14.1430655	8.05480957	1307.65552	114.024361	6.70360231	1.952003	0	0	366.113068	2476.74561	320.67868	790.771484	380.493164
03/06/03	15:44:00	216.186508	12.2619543	14.1430655	8.06396484	1307.65552	109.311333	0	1.952003	0	0	366.113068	2476.74561	335.327148	790.771484	380.493164
03/06/03	15:45:00	216.186508	12.2619543	14.1430655	7.7435298	1307.65552	79.4172516	8.6537838	1.952003	0	0	366.113068	2511.99341	311.828613	790.771484	380.493164
03/06/03	15:46:00	216.186508	12.2619543	14.1430655	8.17382717	1342.99683	102.759689	8.10007381	1.952003	0	0	366.113068	2511.99341	321.899414	780.700684	380.493164
03/06/03	15:47:00	216.186508	12.2619543	14.1430655	7.85339403	1374.35376	56.8642921	8.32559776	1.952003	0	0	366.113068	2511.99341	321.899414	770.629883	380.493164
03/06/03	15:48:00	216.186508	12.2619543	14.1430655	7.85339403	1406.09387	75.8930511	7.93578815	1.952003	0	0	366.113068	2511.99341	321.899414	760.559082	380.493164
03/06/03	15:49:00	216.186508	12.2619543	14.1430655	7.85339403	1437.14563	67.6820374	8.13238335	1.952003	0	0	366.113068	2511.99341	321.899414	750.488281	380.493164
03/06/03	15:50:00	216.186508	12.2619543	14.1430655	7.80761671	1402.06323	67.9923782	7.87833691	1.952003	0	0	366.113068	2511.99341	321.899414	750.488281	380.493164
03/06/03	15:51:00	216.186508	12.2619543	14.1430655	7.89001417	1433.20972	61.4889755	8.10953712	1.952003	0	0	366.113068	2511.99341	321.899414	750.488281	380.493164
03/06/03	15:52:00	216.186508	12.2619543	14.1430655	7.89001417	1397.44617	95.320137	0	1.952003	0	0	366.113068	2511.99341	328.308075	750.488281	380.493164
03/06/03	15:53:00	216.186508	12.2619543	14.1430655	7.96325636	1403.17749	59.7526207	0	1.952003	0	0	366.113068	2511.99341	308.166473	740.41748	380.493164
03/06/03	15:54:00	216.186508	12.2619543	14.1430655	7.63366604	1366.06775	60.8003654	0	1.952003	0	0	366.113068	2476.74561	318.237274	740.41748	380.493164
03/06/03	15:55:00	216.186508	12.2619543	14.1430655	8.12805176	1366.06775	104.788307	0	1.952003	0	0	366.113068	2476.74561	318.237274	740.41748	380.493164
03/06/03	15:56:00	216.186508	12.2619543	14.1430655	7.78930569	1366.06775	63.5099411	0	1.952003	0	0	366.113068	2476.74561	318.237274	740.41748	380.493164
03/06/03	15:57:00	216.186508	12.2619543	14.1430655	8.24706936	1366.06775	75.0562744	0	1.952003	0	0	366.113068	2476.74561	318.237274	740.41748	380.493164
03/06/03	15:58:00	216.186508	12.2619543	14.1430655	7.94494534	1339.91235	117.120941	0	1.952003	0	0	366.113068	2476.74561	318.237274	740.41748	380.493164
03/06/03	15:59:00	216.186508	12.2619543	14.1430655	7.94494534	1306.55591	115.126793	0	1.952003	0	0	366.113068	2476.74561	318.237274	740.41748	380.493164
03/06/03	16:00:00	216.186508	12.2619543	14.1430655	8.18298244	1269.92542	100.899071	0	1.952003	0	0	366.113068	2476.74561	318.237274	740.41748	380.493164
03/06/03	16:01:00	216.186508	12.2619543	14.1430655	7.78930569	1300.71851	93.085434	0	1.952003	0	0	366.113068	2476.74561	318.237274	730.34668	380.493164
03/06/03	16:02:00	216.186508	12.2619543	14.1430655	8.11889553	1300.71851	93.085434	0	1.952003	0	0	366.113068	2476.74561	318.237274	730.34668	380.493164
03/06/03	16:03:00	216.186508	12.2619543	14.1430655	8.12805176	1330.7887	93.085434	0	1.952003	0	0	366.113068	2476.74561	318.237274	730.34668	380.493164
03/06/03	16:04:00	216.186508	12.2619543	14.1430655	8.12805176	1330.7887	88.2084198	0	1.952003	0	0	366.113068	2476.74561	318.237274	720.275879	380.493164
03/06/03	16:05:00	216.186508	12.2619543	14.1430655	7.96325636	1330.7887	88.2084198	0	1.952003	0	0	366.113068	2476.74561	318.237274	720.275879	380.493164
03/06/03	16:06:00	216.186508	5.21239567	14.1430655	7.96325636	1364.40015	88.4467545	0	1.952003	0	0	366.113068	2476.74561	318.237274	720.275879	380.493164
03/06/03	16:07:00	216.186508	5.21239567	14.1430655	7.65197706	1364.40015	88.4467545	0	1.952003	0	0	366.113068	2476.74561	318.237274	710.205078	380.493164
03/06/03	16:08:00	216.186508	5.21239567	14.1430655	7.96325636	1364.40015	84.3034363	0	1.952003	0	0	366.113068	2476.74561	318.237274	710.205078	380.493164
03/06/03	16:09:00	216.186508	5.21239567	14.1430655	7.93579006	1395.27844	84.3034363	0	1.952003	0	0	366.113068	2476.74561	318.237274	700.134277	380.493164
03/06/03	16:10:00	216.186508	5.21239567	14.1430655	7.82592773	1395.27844	84.3034363	0	1.952003	0	0	366.113068	2476.74561	318.237274	700.134277	380.493164
03/06/03	16:11:00	216.186508	5.21239567	14.1430655	8.17382717	1395.27844	88.2084198	0	1.952003	0	0	366.113068	2476.74561	318.237274	700.134277	380.493164
03/06/03	16:12:00	216.186508	5.21239567	14.1430655	8.07312012	1361.09021	88.2084198	0	1.952003	0	0	366.113068	2476.74561	318.237274	690.063477	380.493164
03/06/03	16:13:00	216.186508	5.21239567	14.1430655	7.82592773	1361.09021	84.3034363	0	1.952003	0	0	366.113068	2476.74561	318.237274	690.063477	380.493164
03/06/03	16:14:00	216.186508	5.21239567	14.1430655	7.82592773	1361.09021	92.1763763	0	1.952003	0	0	366.113068	2476.74561	318.237274	690.063477	380.493164
03/06/03	16:15:00	216.186508	5.21239567	14.1430655	8.12805176	1361.09021	87.969429	0	1.952003	0	0	366.113068	2476.74561	318.237274	690.063477	380.493164
03/06/03	16:16:00	216.186508	5.21239567	14.1430655	8.19213772	1361.09021	87.969429	0	1.952003	0	0	366.113068	2476.74561	318.237274	679.992676	380.493164

DATE	TIME	FDTT022 SCR/AH Sootblower Stm Temp DEG F	ABPIOO7 Turbine Throttle Pressure PSIG	ABTE008 Main Stm Temp DEG F	AEFI111 Reheater Spray Flow KPPH	ABPI010 Cold Reheat Stm Press PSIG	ABTE016 Cold Reheat Temp DEG F	ABPT024 Hot Reheat Pressure PSIG	ABTE022 Hot Reheat Temp DEG F	AETE119 BFP Hdr Discharge Temp DEG F	AETE130 FW Htr #7 Outlet Temp DEG F	AETE035 FW Htr #7 Casc Drain Temp DEG F	AFPT026 Cold Reheat Ext Hdr Press PSIG	AFTE027 Cold Reheat Ext Hdr Temp DEG F	AFTI017 HP Aux Steam Temp DEG F	AFFI017 Spray Flow to HP Aux Steam KPPH
03/06/03	15:16:00	823.730469	2411.31592	998.794922	0	355.98053	579.193787	325.866669	918.227112	359.659821	360.644318	352.935913	137.878418	421.071228	387.571777	0
03/06/03	15:17:00	823.730469	2403.9917	1000.40656	0	355.98053	579.193787	325.866669	918.227112	359.659821	360.644318	352.935913	137.878418	421.071228	387.571777	0
03/06/03	15:18:00	823.730469	2400.32959	1003.69739	0	355.98053	579.193787	325.866669	918.227112	359.659821	360.644318	352.935913	137.878418	421.071228	387.571777	0
03/06/03	15:19:00	823.730469	2393.00513	1006.9884	0	347.826233	579.193787	325.866669	919.871033	359.659821	360.644318	352.935913	137.878418	421.071228	387.571777	0
03/06/03	15:20:00	823.730469	2393.00513	1006.9884	0	347.826233	579.193787	325.866669	921.526123	359.659821	360.644318	352.935913	137.878418	421.071228	387.571777	0
03/06/03	15:21:00	823.730469	2396.66748	1010.30225	0	347.826233	579.193787	325.866669	923.170105	359.659821	360.644318	352.935913	137.878418	421.071228	387.571777	0
03/06/03	15:22:00	823.730469	2403.9917	1011.94794	0	347.826233	579.193787	325.866669	923.170105	359.659821	360.644318	352.935913	137.878418	413.331848	387.571777	0
03/06/03	15:23:00	823.730469	2414.97803	1015.2171	0	347.826233	579.193787	325.866669	924.836426	359.659821	360.644318	352.935913	137.878418	413.331848	387.571777	0
03/06/03	15:24:00	823.730469	2418.64014	1013.60504	0	347.826233	591.266602	325.866669	924.836426	359.659821	360.644318	352.935913	137.878418	413.331848	387.571777	0
03/06/03	15:25:00	823.730469	2429.62646	1013.60504	0	347.826233	591.266602	325.866669	924.836426	359.659821	360.644318	352.935913	137.878418	413.331848	387.571777	0
03/06/03	15:26:00	823.730469	2436.95044	1012.07166	0	347.826233	591.266602	325.866669	924.836426	359.659821	360.644318	352.935913	137.878418	413.331848	387.571777	0
03/06/03	15:27:00	823.730469	2440.61255	1008.90393	0	347.826233	591.266602	325.866669	924.836426	359.659821	360.644318	352.935913	137.878418	413.331848	387.571777	0
03/06/03	15:28:00	823.730469	2444.2749	1008.90393	0	355.98053	591.266602	325.866669	924.836426	359.659821	360.644318	352.935913	137.878418	413.331848	387.571777	0
03/06/03	15:29:00	823.730469	2436.95044	1005.82635	0	355.98053	591.266602	325.866669	923.55188	359.659821	360.644318	352.935913	137.878418	413.331848	387.571777	0
03/06/03	15:30:00	823.730469	2436.95044	1002.71509	0	355.98053	591.266602	325.866669	922.042725	359.659821	360.644318	352.935913	137.878418	413.331848	387.571777	0
03/06/03	15:31:00	823.730469	2433.28857	999.536621	0	355.98053	591.266602	325.866669	918.968201	359.659821	360.644318	352.935913	137.878418	413.331848	387.571777	0
03/06/03	15:32:00	823.730469	2425.96411	997.947632	0	355.98053	591.266602	325.866669	917.40271	359.659821	360.644318	352.935913	137.878418	413.331848	387.571777	0
03/06/03	15:33:00	823.730469	2422.302	996.358398	0	355.98053	579.153381	325.866669	915.803772	359.659821	360.644318	352.935913	137.878418	413.331848	387.571777	0
03/06/03	15:34:00	823.730469	2411.31592	998.026184	0	355.98053	579.153381	325.866669	915.803772	359.659821	360.644318	352.935913	137.878418	413.331848	387.571777	0
03/06/03	15:35:00	823.730469	2407.65356	998.026184	0	355.98053	579.153381	325.866669	915.803772	359.659821	360.644318	352.935913	137.878418	413.331848	387.571777	0
03/06/03	15:36:00	823.730469	2400.32959	999.671265	0	355.98053	579.153381	325.866669	915.803772	359.659821	360.644318	352.935913	137.878418	413.331848	387.571777	0
03/06/03	15:37:00	823.730469	2393.00513	1002.91711	0	355.98053	579.153381	325.866669	915.803772	359.659821	360.644318	352.935913	137.878418	405.322144	387.571777	0
03/06/03	15:38:00	823.730469	2389.34326	1007.81989	0	347.826233	579.153381	325.866669	917.447571	359.659821	360.644318	352.935913	137.878418	405.322144	387.571777	0
03/06/03	15:39:00	823.730469	2393.00513	1011.06628	0	347.826233	579.153381	325.866669	919.057861	359.659821	360.644318	352.935913	137.878418	405.322144	387.571777	0
03/06/03	15:40:00	823.730469	2400.32959	1014.32416	0	347.826233	579.153381	325.866669	920.679199	359.659821	360.644318	352.935913	137.878418	405.322144	387.571777	0
03/06/03	15:41:00	823.730469	2407.65356	1017.58215	0	347.826233	591.468689	325.866669	923.933289	359.659821	360.644318	352.935913	137.878418	405.322144	387.571777	0
03/06/03	15:42:00	823.730469	2414.97803	1017.58215	0	347.826233	591.468689	325.866669	923.933289	359.659821	360.644318	352.935913	137.878418	405.322144	387.571777	0
03/06/03	15:43:00	823.730469	2429.62646	1017.58215	0	347.826233	591.468689	325.866669	925.532288	359.659821	360.644318	352.935913	137.878418	405.322144	387.571777	0
03/06/03	15:44:00	823.730469	2436.95044	1015.88007	0	347.826233	591.468689	325.866669	925.532288	359.659821	360.644318	352.935913	137.878418	405.322144	387.571777	0
03/06/03	15:45:00	823.730469	2440.61255	1007.69629	0	347.826233	591.468689	325.866669	925.532288	359.659821	360.644318	352.935913	137.878418	405.322144	387.571777	0
03/06/03	15:46:00	823.730469	2442.44385	1006.05084	0	355.98053	591.468689	325.866669	923.854675	359.659821	360.644318	352.935913	137.878418	405.322144	387.571777	0
03/06/03	15:47:00	823.730469	2446.10596	1001.12567	0	355.98053	591.468689	325.866669	922.188354	359.659821	360.644318	352.935913	137.878418	405.322144	387.571777	0
03/06/03	15:48:00	823.730469	2439.69727	1002.74854	0	355.98053	591.468689	325.866669	920.555725	359.659821	360.644318	352.935913	137.878418	405.322144	387.571777	0
03/06/03	15:49:00	823.730469	2439.69727	1001.10315	0	355.98053	591.468689	325.866669	918.878235	359.659821	360.644318	352.935913	137.878418	397.398468	387.571777	0
03/06/03	15:50:00	823.730469	2432.3728	1002.70361	0	355.98053	591.468689	325.866669	918.878235	359.659821	360.644318	352.935913	137.878418	397.398468	387.571777	0
03/06/03	15:51:00	823.730469	2428.71069	1002.68115	0	355.98053	591.468689	325.866669	918.878235	359.659821	360.644318	352.935913	137.878418	397.398468	387.571777	0
03/06/03	15:52:00	823.730469	2421.38672	999.401672	0	355.98053	591.468689	325.866669	917.200623	359.659821	360.644318	352.935913	137.878418	397.398468	387.571777	0
03/06/03	15:53:00	823.730469	2414.06226	1001.03577	0	355.98053	591.468689	325.866669	917.200623	359.659821	360.644318	352.935913	137.878418	397.398468	387.571777	0
03/06/03	15:54:00	823.730469	2406.73828	1001.01331	0	355.98053	591.468689	325.866669	915.545532	359.659821	360.644318	352.935913	137.878418	397.398468	387.571777	0
03/06/03	15:55:00	823.730469	2399.41382	1001.01331	0	355.98053	591.468689	325.866669	915.545532	359.659821	360.644318	352.935913	137.878418	397.398468	387.571777	0
03/06/03	15:56:00	823.730469	2395.75195	1004.29291	0	355.98053	591.468689	325.866669	917.189392	359.659821	360.644318	352.935913	137.878418	397.398468	387.571777	0
03/06/03	15:57:00	823.730469	2395.75195	1007.56146	0	355.98053	591.468689	325.866669	917.189392	359.659821	360.644318	352.935913	137.878418	397.398468	387.571777	0
03/06/03	15:58:00	823.730469	2403.07593	1012.47601	0	347.826233	591.468689	325.866669	918.822144	359.659821	360.644318	352.935913	137.878418	397.398468	387.571777	0
03/06/03	15:59:00	823.730469	2406.73828	1010.84149	0	347.826233	591.468689	325.866669	918.822144	359.659821	360.644318	352.935913	137.878418	397.398468	387.571777	0
03/06/03	16:00:00	823.730469	2410.40039	1010.84149	0	347.826233	591.468689	325.866669	918.822144	359.659821	360.644318	352.935913	137.878418	397.398468	387.571777	0
03/06/03	16:01:00	823.730469	2414.06226	1010.84149	0	347.826233	591.468689	325.866669	918.822144	359.659821	360.644318	352.935913	137.878418	397.398468	387.571777	0
03/06/03	16:02:00	823.730469	2421.38672	1010.84149	0	347.826233	591.468689	325.866669	918.822144	359.659821	360.644318	352.935913	137.878418	397.398468	387.571777	0
03/06/03	16:03:00	823.730469	2428.71069	1007.58392	0	347.826233	591.468689	325.866669	918.822144	359.659821	360.644318	352.935913	137.878418	397.398468	387.571777	0
03/06/03	16:04:00	823.730469	2428.71069	1007.58392	0	347.826233	591.468689	325.866669	918.822144	359.659821	360.644318	352.935913	137.878418	389.448151	387.571777	0
03/06/03	16:05:00	823.730469	2432.3728	1007.58392	0	347.826233	591.468689	325.866669	918.822144	359.659821	360.644318	352.935913	137.878418	389.448151	387.571777	0
03/06/03	16:06:00	823.730469	2428.71069	1005.96094	0	347.826233	591.468689	325.866669	918.822144	359.659821	360.644318	352.935913	137.878418	389.448151	387.571777	0
03/06/03	16:07:00	823.730469	2432.3728	1005.96094	0	347.826233	591.468689	325.866669	918.822144	359.659821	360.644318	352.935913	137.878418	389.448151	387.571777	0
03/06/03	16:08:00	823.730469	2428.71069	1004.31537	0	355.98053	591.468689	325.866669	918.822144	359.659821	360.644318	352.935913	137.878418	389.448151	387.571777	0
03/06/03	16:09:00	823.730469	2425.04883	1002.66992	0	355.98053	591.468689	325.866669	917.189392	359.659821	360.644318	352.935913	137.878418	389.448151	387.571777	0
03/06/03	16:10:00	823.730469	2421.38672	1000.99084	0	355.98053	591.468689	325.866669	917.189392	359.659821	360.644318	352.935913	137.878418	389.448151	387.571777	0
03/06/03	16:11:00	823.730469	2417.72437	999.33429	0	355.98053	591.468689	325.866669	917.189392	359.659821	360.644318	352.935913	137.878418	389.448151	387.571777	0
03/06/03	16:12:00	823.730469	2417.72437	1000.95709	0	355.98053	591.468689	325.866669	917.099609	359.659821	360.644318	352.935913	137.878418	389.448151	387.571777	0
03/06/03	16:13:00	823.730469	2410.40039	1002.55756	0	355.98053	591.468689	325.866669	917.099609	359.659821	360.644318	352.935913	137.878418	389.448151	387.571777	0
03/06/03	16:14:00	823.730469	2410.40039	1002.55756	0	355.98053	591.468689	325.866669	917.099609	359.659821	360.644318	352.935913	137.878418	389.448151	387.571777	0
03/06/03	16:15:00	823.730469	2410.40039	1000.90094	0	355.98053	591.468689	325.866669	917.099609	359.659821	360.644318	352.935913	137.878418	389.448151	387.571777	0
03/06/03	16:16:00	823.730469	2403.07593	1002.54633	0	355.98053	591.468689	325.866669	917.099609	359.659821	360.644318	352.935913	137.878418	389.448151	387.571777	0

		AETE055	AFPY044A	ASFI006	ASFI016	MAJI002	MAJI004	ADPT003C	DALT004A	DAFI027	EAFI034	DATE014A	DATE014B	DATE016A	DATE016B	ABFI018
		BFBP	DA	Caulkins	Caulkins	Unit	Unit	Absolute	Cooling	Cooling	Cooling	Water Box	Water Box	Water Box	Water Box	Main
		Discharge	Pegging	LP Stm	HP Stm	Megavars	Megawatts	Cond Vac	Twr Basin	Twr Blow-	Twr Blow-	Inlet A	Inlet B	Outlet A	Outlet B	Steam
		Hdr Temp	Stm Valve	Flow Output	Flow Output			Calculated	Level	Down Flow	Down SDA	Temp	Temp	Temp	Temp	Flow
DATE	TIME	DEG F	PCT	KPPH	KPPH	MVAR	MW	IN HGA	IN	GPM	GPM	DEG F	DEG F	DEG F	DEG F	KPPH
03/06/03	15:16:00	253.002487	0	78.7367935	15.3753195	-2.3193359	216.949463	2.36450195	59.1357422	0	201.997498	81.8800812	81.8064957	94.7281494	96.2585831	1360.83435
03/06/03	15:17:00	253.002487	0	78.7367935	15.434267	-2.3193359	216.949463	2.36450195	59.1357422	0	198.784592	81.8800812	81.8064957	94.7281494	96.2585831	1360.83435
03/06/03	15:18:00	253.002487	0	80.7973328	15.434267	-2.3193359	216.949463	2.36450195	59.1357422	0	198.784592	81.8800812	80.3487625	94.7281494	96.2585831	1360.83435
03/06/03	15:19:00	253.002487	0	80.7973328	15.3754196	-2.3193359	216.949463	2.36450195	59.1357422	0	198.784592	81.8800812	81.7770691	94.7281494	96.2585831	1360.83435
03/06/03	15:20:00	253.002487	0	80.7973328	15.4833288	-2.3193359	216.949463	2.36450195	59.1357422	0	205.312866	81.8800812	81.7918167	94.7281494	96.2585831	1360.83435
03/06/03	15:21:00	253.002487	0	80.7973328	16.0512428	-2.3193359	216.949463	2.36450195	59.1357422	0	208.650543	81.8800812	81.7918167	94.7281494	96.2585831	1360.83435
03/06/03	15:22:00	253.002487	0	78.6104584	15.5152254	-2.3193359	216.949463	2.36450195	59.1357422	0	215.388672	81.8800812	81.7918167	94.7281494	96.2585831	1360.83435
03/06/03	15:23:00	253.002487	0	78.6104584	15.5152254	-2.3193359	216.949463	2.36450195	59.1357422	0	221.992081	81.8800812	80.3782806	94.7281494	96.2585831	1360.83435
03/06/03	15:24:00	253.002487	0	78.6104584	15.5152254	-2.3193359	216.949463	2.36450195	59.1357422	0	221.992081	81.8800812	81.8065567	94.7281494	96.2585831	1360.83435
03/06/03	15:25:00	253.002487	0	78.6104584	15.5080347	-2.3193359	216.949463	2.36450195	59.1357422	0	225.220871	81.8800812	81.8065567	94.7281494	96.2585831	1360.83435
03/06/03	15:26:00	253.002487	0	82.9515686	15.5080347	-2.3193359	216.949463	2.36450195	59.1357422	0	231.678345	81.8655167	81.8065567	94.7281494	96.2585831	1360.83435
03/06/03	15:27:00	253.002487	0	82.9515686	15.5080347	-2.3193359	216.949463	2.36450195	59.1357422	0	238.355209	81.8655167	81.9981308	94.7281494	96.2585831	1360.83435
03/06/03	15:28:00	253.002487	0	78.7523499	15.5080347	-2.3193359	221.984863	2.36450195	59.1357422	0	241.689117	80.7027359	82.1306839	94.7281494	94.9182053	1360.83435
03/06/03	15:29:00	253.002487	0	78.7523499	15.5080347	-2.3193359	221.984863	2.36450195	59.1357422	0	244.913406	80.7027359	82.1306839	94.7281494	94.9182053	1360.83435
03/06/03	15:30:00	253.002487	0	78.7523499	15.5080347	-2.3193359	221.984863	2.36450195	59.1357422	0	251.362244	80.3418655	82.5279236	94.7281494	95.2390137	1360.83435
03/06/03	15:31:00	253.002487	0	78.7523499	15.3402185	-2.3193359	221.984863	2.36450195	59.1357422	0	254.586761	80.3418655	82.6601791	94.7281494	95.2390137	1360.83435
03/06/03	15:32:00	253.002487	0	82.9595337	15.3528519	-2.3193359	221.984863	2.36450195	59.1357422	0	257.831665	81.3357315	81.3357315	94.7281494	95.2390137	1360.83435
03/06/03	15:33:00	253.002487	0	82.9595337	15.2350645	-2.3193359	221.984863	2.36450195	59.1357422	0	257.831665	81.394516	81.3357315	94.7281494	95.2390137	1360.83435
03/06/03	15:34:00	253.002487	0	80.5734787	15.2350645	-2.3193359	221.984863	2.36450195	59.1357422	0	257.831665	81.394516	81.3357315	94.7281494	95.2390137	1360.83435
03/06/03	15:35:00	253.002487	0	78.491478	15.2350645	-2.3193359	221.984863	2.36450195	59.1357422	0	257.831665	79.9510803	81.3357315	94.7281494	95.2390137	1360.83435
03/06/03	15:36:00	253.002487	0	78.491478	15.3788719	-2.3193359	216.949463	2.36450195	59.1357422	0	257.831665	81.3797531	81.3357315	94.7281494	95.2390137	1360.83435
03/06/03	15:37:00	253.002487	0	78.491478	15.3788719	-2.3193359	216.949463	2.36450195	59.1357422	0	257.831665	81.3797531	81.3357315	94.7281494	95.2390137	1360.83435
03/06/03	15:38:00	253.002487	0	82.7583389	15.1896286	-2.3193359	216.949463	2.36450195	59.1357422	0	257.831665	81.3797531	81.3357315	94.7281494	95.2390137	1360.83435
03/06/03	15:39:00	253.002487	0	82.7583389	15.3383293	-2.3193359	216.949463	2.36450195	59.1357422	0	257.831665	81.3797531	81.3357315	94.7281494	95.2390137	1360.83435
03/06/03	15:40:00	253.002487	0	82.7583389	15.3383293	-2.3193359	216.949463	2.36450195	59.1357422	0	257.831665	81.3797531	81.3357315	94.7281494	95.2390137	1360.83435
03/06/03	15:41:00	253.002487	0	78.1076736	15.4348593	-2.3193359	216.949463	2.36450195	59.1357422	0	257.831665	81.3797531	81.3357315	94.7281494	95.2390137	1360.83435
03/06/03	15:42:00	253.002487	0	78.1076736	15.4632311	-2.3193359	216.949463	2.36450195	59.1357422	0	261.036041	81.3797531	81.3357315	94.7281494	95.2390137	1360.83435
03/06/03	15:43:00	253.002487	0	78.1076736	16.166584	-2.3193359	216.949463	2.36450195	59.1357422	0	264.260803	81.3797531	81.3357315	94.7281494	95.2390137	1360.83435
03/06/03	15:44:00	253.002487	0	78.1076736	15.5936975	-2.3193359	216.949463	2.36450195	59.1357422	0	267.505157	81.3797531	81.3357315	94.7281494	95.4425812	1360.83435
03/06/03	15:45:00	253.002487	0	84.479805	15.5936975	-2.3193359	216.949463	2.36450195	59.1357422	0	267.505157	81.3797531	81.3357315	94.7281494	95.4425812	1360.83435
03/06/03	15:46:00	253.002487	0	81.6142349	15.5936975	-2.3193359	216.949463	2.36450195	59.1357422	0	270.71048	81.3797531	81.3357315	94.7281494	95.4133835	1360.83435
03/06/03	15:47:00	253.002487	0	79.3243027	15.4230175	-2.3193359	216.949463	2.36450195	59.1357422	0	273.935425	81.3797531	81.3357315	94.7281494	95.3841782	1360.83435
03/06/03	15:48:00	253.002487	0	79.3243027	15.8548965	-2.3193359	216.949463	2.36450195	59.1357422	0	273.935425	81.3797531	81.3357315	94.7281494	96.7829666	1360.83435
03/06/03	15:49:00	253.002487	0	79.3243027	15.3665028	-2.3193359	216.949463	2.36450195	59.1357422	0	277.17926	81.1439285	81.3357315	94.7281494	95.3550262	1360.83435
03/06/03	15:50:00	253.002487	0	79.3243027	15.3665028	-2.3193359	216.949463	2.36450195	59.1357422	0	277.17926	81.1144714	81.3357315	94.7281494	95.3550262	1360.83435
03/06/03	15:51:00	253.002487	0	79.3243027	15.2182941	-2.3193359	216.949463	2.36450195	59.1357422	0	273.935425	81.114418	81.8283615	94.7281494	95.3550262	1360.83435
03/06/03	15:52:00	253.002487	0	79.3243027	15.3438559	-2.3193359	216.949463	2.36450195	59.1357422	0	273.935425	81.0850143	81.8136978	94.7281494	95.3550262	1360.83435
03/06/03	15:53:00	253.002487	0	83.5088348	15.3438559	-2.3193359	216.949463	2.36450195	59.1357422	0	273.935425	81.0849686	81.7989273	94.7281494	95.2966461	1360.83435
03/06/03	15:54:00	253.002487	0	83.5088348	15.2872419	-2.3193359	216.949463	2.36450195	59.1357422	0	273.935425	82.4978104	80.3559036	94.7281494	95.2820511	1360.83435
03/06/03	15:55:00	253.002487	0	79.0645294	15.3455486	-2.3193359	216.949463	2.36450195	59.1357422	0	267.505157	82.4978104	81.7842026	94.7281494	95.2820511	1360.83435
03/06/03	15:56:00	253.002487	0	79.0645294	15.8217859	-2.3193359	216.949463	2.36450195	59.1357422	0	260.975952	81.0554962	80.3411636	94.7281494	95.2820511	1360.83435
03/06/03	15:57:00	253.002487	0	79.2829742	15.4078903	-2.3193359	216.949463	2.36450195	59.1357422	0	251.112473	82.4683762	81.7547455	94.7281494	95.2528763	1360.83435
03/06/03	15:58:00	253.002487	0	81.5527802	15.4078903	-2.3193359	216.949463	2.36450195	59.1357422	0	244.592896	82.4683762	81.7400208	94.7281494	95.2382889	1360.83435
03/06/03	15:59:00	253.002487	0	83.5827942	15.4078903	-2.3193359	216.949463	2.36450195	59.1357422	0	234.706543	82.4683762	81.7400208	94.7281494	95.2382889	1360.83435
03/06/03	16:00:00	253.002487	0	81.4643936	15.5179462	-2.3193359	216.949463	2.36450195	59.1357422	0	228.128815	82.4536514	80.311676	94.7281494	95.2382889	1360.83435
03/06/03	16:01:00	253.002487	0	79.2823792	15.3457232	-2.3193359	216.949463	2.36450195	59.1357422	0	228.128815	82.4536514	81.7400208	94.7281494	95.2382889	1360.83435
03/06/03	16:02:00	253.002487	0	79.2823792	15.7487926	-2.3193359	216.949463	2.36450195	59.1357422	0	228.128815	82.4389343	81.7400208	94.7281494	95.2382889	1360.83435
03/06/03	16:03:00	253.002487	0	79.2823792	15.7487926	-2.3193359	216.949463	2.36450195	59.1357422	0	231.339417	82.4389343	81.7400208	94.7281494	96.6226273	1360.83435
03/06/03	16:04:00	253.002487	0	88.0470352	14.9152193	-2.3193359	216.949463	2.36450195	59.1357422	0	237.828003	82.4389343	81.7400208	94.7281494	95.1945267	1360.83435
03/06/03	16:05:00	253.002487	0	88.0470352	15.4016199	-2.3193359	216.949463	2.36450195	59.1357422	0	237.828003	80.9671402	81.68116	94.7281494	95.1945267	1360.83435
03/06/03	16:06:00	253.002487	0	88.0470352	15.4016199	-2.3193359	216.949463	2.36450195	59.1357422	0	244.271957	80.9670868	81.6811142	94.7281494	95.1799316	1360.83435
03/06/03	16:07:00	253.002487	0	83.5642471	15.4639091	-2.3193359	216.949463	2.36450195	59.1357422	0	244.271957	80.9229279	81.6369705	94.7281494	95.1799316	1360.83435
03/06/03	16:08:00	253.002487	0	83.5642471	15.3937979	-2.3193359	216.949463	2.36450195	59.1357422	0	247.525864	82.3359375	81.6369705	94.7281494	95.1799316	1360.83435
03/06/03	16:09:00	253.002487	0	83.5642471	15.3937979	-2.3193359	216.949463	2.36450195	59.1357422	0	250.799927	82.3359375	81.6369705	94.7281494	95.1799316	1360.83435
03/06/03	16:10:00	253.002487	0	83.5642471	15.2055931	-2.3193359	216.949463	2.36450195	59.1357422	0	254.031616	80.8640213	82.2918091	94.7281494	95.1799316	1360.83435
03/06/03	16:11:00	253.002487	0	83.5642471	15.0966845	-2.3193359	216.949463	2.36450195	59.1357422	0	254.031616	82.2918091	82.2770767	94.7281494	95.1799316	1360.83435
03/06/03	16:12:00	253.002487	0	85.6047821	15.0966845	-2.3193359	216.949463	2.36450195	59.1357422	0	254.031616	82.2770767	80.8492737	94.7281494	95.1799316	1360.83435
03/06/03	16:13:00	253.002487	0	87.8519211	15.0966845	-2.3193359	216.949463	2.36450195	59.1357422	0	250.799927	82.2770767	80.8492737	94.7281494	95.1799316	1360.83435
03/06/03	16:14:00	253.002487	0	87.8519211	14.9873991	-2.3193359	216.949463	2.36450195	59.1357422	0	247.525864	82.2623596	80.8345413	94.7281494	95.1799316	1360.83435
03/06/03	16:15:00	253.002487	0	85.4338989	15.3322868	-2.3193359	216.949463	2.36450195	59.1357422	0	244.207718	82.2623596	80.8345413	94.7281494	95.1799316	1360.83435
03/06/03	16:16:00	253.002487	0	85.4338989	15.3322868	-2.3193359	216.949463	2.36450195	59.1357422	0	240.973953	82.2182236	80.7903595	94.7281494	95.1799316	1360.83435

DATE	TIME	MBEL100 Excitation Losses KW	BATI013 AH Gas Outlet Temp DEG F	BAAI046 Excess Oxygen PCT	RMAT500 Relative Humidity PCT	BATI011 AH Air Inlet Temp DEG F	JCFT152 Coal Fdr A Flow Rate KPPH	JCFT252 Coal Fdr B Flow Rate KPPH	JCFT352 Coal Fdr C Flow Rate KPPH	JCFT452 Coal Fdr D Flow Rate KPPH	NAET102 13.8 Kv NAA01 Aux Scr Volts VOLTS	NAET202 13.8 Kv NAAO2 Aux Scr Volts VOLTS	NAIT101 13.8 Kv NAAO1 Aux Scr Current AMPS	NAIT201 13.8 Kv NAA02 Aux Scr Current AMPS	MAII006A Generator Arm Current Phase A KA	MAII006B Generator Arm Current Phase B KA
03/06/03	15:16:00	587.671143	256.127533	4.33780956	10.9191875	107.465561	73.8122482	0.02685483	75.2893066	29.6350117	13995.4824	14231.6885	0.29296178	-1.1718806	5.16503906	5.26269484
03/06/03	15:17:00	587.671143	256.127533	4.07735014	9.91210842	107.465561	75.490715	0.02685483	79.1162109	29.9035664	13995.4824	14231.6885	0.29296178	-1.1718806	5.16503906	5.26269484
03/06/03	15:18:00	587.671143	256.127533	4.07735014	9.97314453	107.465561	77.6391602	0.02685483	77.7398605	32.5555382	13995.4824	14231.6885	0.29296178	-1.1718806	5.16503906	5.26269484
03/06/03	15:19:00	587.671143	256.127533	3.82335663	8.96606445	107.465561	82.9431076	0.02685483	81.2310791	29.8364258	13995.4824	14231.6885	0.29296178	-1.1718806	5.16503906	5.26269484
03/06/03	15:20:00	587.671143	256.127533	3.82335663	10.1562481	107.465561	80.223999	0.02685483	79.317627	29.4335899	13995.4824	14231.6885	0.29296178	-1.1718806	5.16503906	5.26269484
03/06/03	15:21:00	587.671143	256.127533	3.5703516	7.89794827	107.465561	74.5172119	0.02685483	73.9465332	29.5678711	13995.4824	14231.6885	0.29296178	-1.1718806	5.16503906	5.26269484
03/06/03	15:22:00	587.671143	256.127533	3.82523441	8.90502834	107.465561	71.5631104	0.02685483	72.1673508	30.0042706	13995.4824	14231.6885	0.29296178	-1.1718806	5.16503906	5.26269484
03/06/03	15:23:00	587.671143	256.127533	3.82523441	9.942626	107.465561	65.3192139	0.02685483	66.4941406	30.2728233	13995.4824	14231.6885	0.29296178	-1.1718806	5.16503906	5.26269484
03/06/03	15:24:00	587.671143	256.127533	4.07770872	12.0483379	107.465561	65.1513596	0.02685483	65.0842285	30.1049805	13995.4824	14231.6885	0.29296178	-1.1718806	5.16503906	5.26269484
03/06/03	15:25:00	587.671143	256.127533	4.07929039	8.63036919	107.465561	59.4110069	0.02685483	60.3509521	29.8028545	13995.4824	14231.6885	0.29296178	-1.1718806	5.16503906	5.26269484
03/06/03	15:26:00	587.671143	256.127533	4.07929039	10.7665997	107.465561	58.5382042	0.02685483	58.9746094	28.3929424	13995.4824	14231.6885	0.29296178	-1.1718806	5.16503906	5.26269484
03/06/03	15:27:00	587.671143	256.127533	4.33011293	9.72900391	107.465561	55.5169678	0.02685483	55.6512413	29.4000206	13995.4824	14231.6885	0.29296178	-1.1718806	5.16503906	5.26269484
03/06/03	15:28:00	587.671143	256.127533	4.33011293	12.9638662	107.465561	54.140625	0.02685483	54.2748985	29.7357159	13995.4824	14231.6885	0.29296178	-1.1718806	5.16503906	5.26269484
03/06/03	15:29:00	587.671143	256.127533	4.58729362	10.88867	107.465561	61.3916016	0.02685483	61.4923096	30.0714092	13995.4824	14231.6885	0.29296178	-1.1718806	5.16503906	5.26269484
03/06/03	15:30:00	587.671143	256.127533	4.32642365	10.8581543	107.465561	59.4781494	0.02685483	58.4710655	27.1844444	13995.4824	14231.6885	0.29296178	-1.1718806	5.16503906	5.26269484
03/06/03	15:31:00	587.671143	256.127533	4.58259296	10.8581543	107.465561	58.8403282	0.02685483	59.7467041	29.366457	13995.4824	14231.6885	0.29296178	-1.1718806	5.16503906	5.26269484
03/06/03	15:32:00	587.671143	256.127533	4.58259296	11.895752	107.465561	68.0383301	0.02685483	67.53479	29.7357159	13995.4824	14231.6885	0.29296178	-1.1718806	5.16503906	5.26269484
03/06/03	15:33:00	587.671143	256.127533	4.32643938	12.902832	107.465561	66.427002	0.02685483	65.8227539	29.4000206	13995.4824	14231.6885	0.29296178	-1.1718806	5.16503906	5.26269484
03/06/03	15:34:00	587.671143	256.127533	4.32902145	10.88867	107.465561	74.0808105	0.02685483	73.9129639	27.8222637	13995.4824	14231.6885	0.29296178	-1.1718806	5.16503906	5.26269484
03/06/03	15:35:00	587.671143	256.127533	4.0729599	10.88867	107.465561	74.0136719	0.02685483	73.5101318	29.6685753	13995.4824	14231.6885	0.29296178	-1.1718806	5.16503906	5.26269484
03/06/03	15:36:00	587.671143	256.127533	4.0729599	11.9262676	107.465561	74.9200439	0.02685483	75.0878906	30.2056904	13995.4824	14231.6885	0.29296178	-1.1718806	5.16503906	5.26269484
03/06/03	15:37:00	587.671143	256.127533	3.8228035	12.9333477	107.465561	82.5738525	0.02685483	83.3123703	29.6685753	13995.4824	14231.6885	0.29296178	-1.1718806	5.16503906	5.26269484
03/06/03	15:38:00	587.671143	256.127533	3.8228035	10.8581543	107.465561	83.5137939	0.02685483	82.6409836	28.9636211	13995.4824	14231.6885	0.29296178	-1.1718806	5.16503906	5.26269484
03/06/03	15:39:00	587.671143	256.127533	3.54710698	10.8581543	107.465561	78.2098389	0.02685483	78.4783936	30.2056904	13995.4824	14231.6885	0.29296178	-1.1718806	5.16503906	5.26269484
03/06/03	15:40:00	587.671143	256.127533	3.54710698	11.9262676	109.496567	73.3422852	0.02685483	72.4694748	32.3205566	13995.4824	14231.6885	0.29296178	-1.1718806	5.16503906	5.26269484
03/06/03	15:41:00	587.671143	256.127533	3.54710698	10.9191875	109.496567	69.0789719	0.02685483	69.6160889	32.6898193	13995.4824	14231.6885	0.29296178	-1.1718806	5.16503906	5.26269484
03/06/03	15:42:00	587.671143	256.127533	3.80501604	10.88867	109.496567	65.5877686	0.02685483	64.5135498	33.1262207	13995.4824	14231.6885	0.29296178	-1.1718806	5.16503906	5.26269484
03/06/03	15:43:00	587.671143	256.127533	3.80501604	11.9262676	109.496567	56.0876465	0.02685483	55.9197998	33.1933594	13995.4824	14231.6885	0.29296178	-1.1718806	5.16503906	5.26269484
03/06/03	15:44:00	587.671143	256.127533	4.57435274	12.9333477	109.496567	56.9604492	0.02685483	57.1282921	32.9248047	13995.4824	14231.6885	0.29296178	-1.1718806	5.16503906	5.26269484
03/06/03	15:45:00	587.671143	256.127533	4.56926441	9.36279106	109.496567	57.4639893	0.02685483	58.135376	32.7905235	13995.4824	14231.6885	0.29296178	-1.1718806	5.16503906	5.26269484
03/06/03	15:46:00	587.671143	256.127533	4.58754921	8.35571098	109.496567	55.6512413	0.02685483	57.2625732	33.1262207	13995.4824	14231.6885	0.29296178	-1.1718806	5.16503906	5.26269484
03/06/03	15:47:00	587.671143	256.127533	4.58749771	9.39330864	109.496567	54.6105919	0.02685483	54.8120079	33.4619141	13995.4824	14231.6885	0.29296178	-1.1718806	5.16503906	5.26269484
03/06/03	15:48:00	587.671143	256.127533	4.58749771	9.39330864	109.496567	58.3703613	0.02685483	56.2890587	32.5555382	13995.4824	14231.6885	0.29296178	-1.1718806	5.16503906	5.26269484
03/06/03	15:49:00	587.671143	256.127533	4.32419443	9.39330864	109.496567	57.2290039	0.02685483	54.6441612	32.65625	13995.4824	14231.6885	0.29296178	-1.1718806	5.16503906	5.26269484
03/06/03	15:50:00	587.671143	256.127533	4.32419443	10.4919434	109.496567	63.2043419	0.02685483	64.1778564	36.2817383	13995.4824	14231.6885	0.29296178	-1.1718806	5.16503906	5.26269484
03/06/03	15:51:00	587.671143	256.127533	4.32419443	9.39330864	109.496567	63.9428711	0.02685483	62.6336632	32.8240929	13995.4824	14231.6885	0.29296178	-1.1718806	5.16503906	5.26269484
03/06/03	15:52:00	587.671143	256.127533	4.32419443	9.39330864	109.496567	64.1107178	0.02685483	64.4128418	32.6898193	13995.4824	14231.6885	0.29296178	-1.1718806	5.16503906	5.26269484
03/06/03	15:53:00	587.671143	256.127533	4.32419443	10.4003887	109.496567	69.2803955	0.02685483	69.0118408	32.8240929	13995.4824	14231.6885	0.29296178	-1.1718806	5.16503906	5.26269484
03/06/03	15:54:00	587.671143	256.127533	4.32419443	10.4003887	109.496567	72.2344971	0.02685483	76.3299484	33.3612022	13995.4824	14231.6885	0.29296178	-1.1718806	5.16503906	5.26269484
03/06/03	15:55:00	587.671143	256.127533	4.0658741	9.39330864	109.496567	76.027832	0.02685483	79.1497726	33.0926476	13995.4824	14231.6885	0.29296178	-1.1718806	5.16503906	5.26269484
03/06/03	15:56:00	587.671143	256.127533	4.0658741	4.90722704	109.496567	77.7734299	0.02685483	78.6126633	36.8188477	13995.4824	14231.6885	0.29296178	-1.1718806	5.16503906	5.26269484
03/06/03	15:57:00	587.671143	256.127533	3.80911803	6.98242044	109.496567	74.5172119	0.02685483	73.8458176	32.7905235	13995.4824	14231.6885	0.29296178	-1.1718806	5.16503906	5.26269484
03/06/03	15:58:00	587.671143	256.127533	3.80911803	5.94482231	109.496567	69.8175049	0.02685483	68.6090088	33.3947716	13995.4824	14231.6885	0.29296178	-1.1718806	5.16503906	5.26269484
03/06/03	15:59:00	587.671143	256.127533	4.05960131	8.08105469	109.496567	67.9376221	0.02685483	67.9711838	33.5290527	13995.4824	14231.6885	0.29296178	-1.1718806	5.16503906	5.26269484
03/06/03	16:00:00	587.671143	256.127533	4.05960131	9.17968655	109.496567	65.3527832	0.02685483	65.0506592	32.6898193	13995.4824	14231.6885	0.29296178	-1.1718806	5.16503906	5.26269484
03/06/03	16:01:00	587.671143	256.127533	4.05960131	7.01293898	109.496567	66.6619873	0.02685483	66.5612717	32.958374	13995.4824	14231.6885	0.29296178	-1.1718806	5.16503906	5.26269484
03/06/03	16:02:00	587.671143	256.127533	4.05960131	6.0058589	109.496567	62.1636925	0.02685483	61.6265831	35.4089355	13995.4824	14231.6885	0.29296178	-1.1718806	5.16503906	5.26269484
03/06/03	16:03:00	587.671143	256.127533	4.05960131	3.93066263	109.496567	58.7396202	0.02685483	58.336792	33.0255089	13995.4824	14231.6885	0.29296178	-1.1718806	5.16503906	5.26269484
03/06/03	16:04:00	587.671143	256.127533	4.31545401	5.12084913	109.496567	61.9958496	0.02685483	62.1972618	33.3947716	13995.4824	14231.6885	0.29296178	-1.1718806	5.16503906	5.26269484
03/06/03	16:05:00	587.671143	256.127533	4.31545401	4.11376953	109.496567	58.94104	0.02685483	58.2696495	33.0255089	13995.4824	14231.6885	0.29296178	-1.1718806	5.16503906	5.26269484
03/06/03	16:06:00	587.671143	256.127533	4.31545401	6.3415513	109.496567	62.3651085	0.02685483	61.3244591	32.8912354	13995.4824	14231.6885	0.29296178	-1.1718806	5.16503906	5.26269484
03/06/03	16:07:00	587.671143	256.127533	4.31545401	7.34863091	109.496567	60.8544922	0.02685483	60.1495323	32.8240929	13995.4824	14231.6885	0.29296178	-1.1718806	5.16503906	5.26269484
03/06/03	16:08:00	587.671143	256.127533	4.31545401	7.37914944	109.496567	62.6000977	0.02685483	63.2043419	36.8188477	13995.4824	14231.6885	0.29296178	-1.1718806	5.16503906	5.26269484
03/06/03	16:09:00	587.671143	256.127533	4.31545401	4.14428759	109.496567	64.0435715	0.02685483	64.1107178	32.9919434	13995.4824	14231.6885	0.29296178	-1.1718806	5.16503906	5.26269484
03/06/03	16:10:00	587.671143	256.127533	4.32306957	6.21948099	109.496567	65.3863525	0.02685483	66.1248779	32.8912354	13995.4824	14231.6885	0.29296178	-1.1718806	5.16503906	5.26269484
03/06/03	16:11:00	587.671143	256.127533	4.07127619	8.38622952	109.496567	68.5082932	0.02685483	68.6090088	32.8912354	13995.4824	14231.6885	0.29296178	-1.1718806	5.16503906	5.26269484
03/06/03	16:12:00	587.671143	256.127533	4.07127619	9.39330864	109.496567	64.7485352	0.02685483	65.7556076	33.1262207	13995.4824	14231.6885	0.29296178	-1.1718806	5.16503906	5.26269484
03/06/03	16:13:00	587.671143	256.127533	4.07127619	8.17260742	109.496567	68.1390381	0.02685483	68.0718994	33.4619141	13995.4824	14231.6885	0.29296178	-1.1718806	5.16503906	5.26269484
03/06/03	16:14:00	587.671143	256.127533	4.07127619	8.17260742	109.496567	71.0595627	0.02685483	70.7574387	34.5025597	13995.4824	14231.6885	0.29296178	-1.1718806	5.16503906	5.26269484
03/06/03	16:15:00	587.671143	256.127533	3.81175876	8.17260742	109.496567	70.8581543	0.02685483	69.7167969	33.3947716	13995.4824	14231.6885	0.29296178	-1.1718806	5.16503906	5.26269484
03/06/03	16:16:00	587.671143	256.127533	4.06619644	8.17260742	109.496567	75.8935547	0.02685483	74.2822266	33.15979	13995.4824	14231.6885	0.29296178	-1.1718806	5.16503906	5.26269484

DATE	TIME	MAII006C Generator Arm Current Phase C KA	RMTT500 Ambient Temp DEG F	ADFI001 Cond Xfer Flow Calculated KPPH	ADLT001 Condenser Hotwell Level IN	TSTMFLO Total Stm Flow KPPH	BAFI002 Total Air Flow KPPH	REAI001 CEMS CO2 %	BAAI052 Boiler CO PPM	BATE055 SCR Outlet Temp. DEG F	BATI020 AH Air Outlet Temp. DEG F	AEFY136 Fisher FW Valve Demand %	
03/06/03	15:16:00	5.47753906	87.2680664	133.696503	47.2558594	1361.43738	2220.58643	11.1865225	0	627.918213	549.849731	0 42.7484932	178.763421
03/06/03	15:17:00	5.47753906	87.2680664	134.719742	47.2558594	1361.43738	2220.58643	11.1804199	0	627.918213	549.849731	0 42.751606	184.537347
03/06/03	15:18:00	5.47753906	87.2680664	137.144424	46.7724609	1361.43738	2220.58643	11.3879385	0	627.918213	549.849731	0 41.7506294	187.961414
03/06/03	15:19:00	5.47753906	87.2680664	134.311401	46.7724609	1361.43738	2220.58643	11.394042	0	627.918213	549.849731	0 41.7506294	194.037467
03/06/03	15:20:00	5.47753906	87.2680664	143.601318	46.7724609	1361.43738	2220.58643	11.4855957	0	627.918213	549.849731	0 41.7506294	189.002071
03/06/03	15:21:00	5.47753906	87.2680664	153.939957	46.7724609	1361.43738	2263.03394	11.6870117	0	627.918213	549.849731	0 39.6954765	178.058471
03/06/03	15:22:00	5.47753906	87.2680664	149.87175	46.7724609	1361.43738	2226.9436	11.4855957	0	627.918213	549.849731	0 39.6954765	173.761587
03/06/03	15:23:00	5.47753906	87.2680664	135.228485	46.7724609	1361.43738	2263.85205	11.6931143	0	627.918213	549.849731	0 40.9396782	162.113033
03/06/03	15:24:00	5.47753906	87.2680664	132.561798	47.2558594	1361.43738	2226.69727	11.6931143	0	627.918213	549.849731	0 39.8760757	160.367423
03/06/03	15:25:00	5.47753906	87.2680664	129.628647	47.2558594	1361.43738	2266.66675	11.6870117	0	627.918213	549.849731	0 38.9171028	149.591668
03/06/03	15:26:00	5.47753906	87.2680664	125.647728	47.2558594	1361.43738	2230.23633	11.4916983	0	627.918213	549.849731	0 39.9381256	145.932611
03/06/03	15:27:00	5.47753906	87.2680664	113.955429	47.2558594	1361.43738	2300.04199	11.6931143	0	627.918213	549.849731	0 40.954731	140.595085
03/06/03	15:28:00	5.47753906	87.2680664	111.765175	47.7392578	1361.43738	2265.19434	11.4855957	0	627.918213	549.849731	0 41.955574	138.178094
03/06/03	15:29:00	5.47753906	87.2680664	114.19619	47.7392578	1361.43738	2265.19434	11.4916983	0	627.918213	549.849731	0 41.955574	152.982175
03/06/03	15:30:00	5.47753906	87.2680664	118.098022	47.7392578	1361.43738	2265.19434	11.2841797	0	627.918213	549.849731	0 41.8974152	145.160514
03/06/03	15:31:00	5.47753906	87.2680664	114.075867	47.7392578	1361.43738	2265.19434	11.2841797	0	627.918213	549.849731	0 41.8974152	147.980344
03/06/03	15:32:00	5.47753906	87.2680664	117.281204	47.2558594	1361.43738	2228.90796	11.2841797	0	627.918213	549.849731	0 42.9259949	165.335691
03/06/03	15:33:00	5.47753906	87.2680664	134.821655	47.2558594	1361.43738	2228.90796	11.0888662	0	627.918213	549.849731	0 41.8488693	161.676631
03/06/03	15:34:00	5.47753906	87.2680664	135.431442	47.2558594	1361.43738	2192.67896	11.2841797	0	627.918213	549.849731	0 41.8488693	175.842893
03/06/03	15:35:00	5.47753906	87.2680664	134.821655	47.2558594	1361.43738	2230.55542	11.1865225	0	627.918213	549.849731	0 41.8488693	177.219234
03/06/03	15:36:00	5.47753906	87.2680664	134.209106	46.7578125	1361.43738	2195.7666	11.394042	0	627.918213	549.849731	0 41.8488693	180.24048
03/06/03	15:37:00	5.47753906	87.2680664	142.834213	46.7578125	1361.43738	2197.09375	11.394042	0	627.918213	549.849731	0 41.9209976	195.581653
03/06/03	15:38:00	5.47753906	87.2680664	151.964676	46.7578125	1361.43738	2232.93213	11.3879385	0	627.918213	549.849731	0 40.9016647	195.145253
03/06/03	15:39:00	5.31640625	87.2680664	153.850708	46.7578125	1361.43738	2225.02197	11.5893555	0	627.918213	549.849731	0 40.9160042	186.920778
03/06/03	15:40:00	5.31640625	87.2680664	138.539215	46.7578125	1361.43738	2270.79541	11.5893555	0	627.918213	549.849731	0 39.9511566	178.159171
03/06/03	15:41:00	5.31640625	87.2680664	135.431442	46.7578125	1361.43738	2234.4436	11.7907715	0	627.918213	549.849731	0 39.9388275	171.411735
03/06/03	15:42:00	5.31640625	87.2680664	134.311401	46.7578125	1361.43738	2273.40259	11.7907715	0	627.918213	549.849731	0 39.9388275	163.254394
03/06/03	15:43:00	5.31640625	87.2680664	129.522675	46.7578125	1361.43738	2273.40259	11.796874	0	627.918213	549.849731	0 38.7720032	145.22766
03/06/03	15:44:00	5.31640625	87.2680664	123.108246	47.2412109	1361.43738	2273.40259	11.595458	0	627.918213	549.849731	0 39.8209877	147.040401
03/06/03	15:45:00	5.31640625	87.2680664	114.676216	47.2412109	1361.43738	2273.40259	11.595458	0	627.918213	549.849731	0 39.8209877	148.416744
03/06/03	15:46:00	5.47753906	87.2680664	111.765175	47.7246094	1361.43738	2273.40259	11.2841797	0	627.918213	549.849731	0 40.8480606	146.06689
03/06/03	15:47:00	5.47753906	87.2680664	93.1327286	47.7246094	1361.43738	2273.40259	11.0827627	0	627.918213	549.849731	0 41.8641968	142.911369
03/06/03	15:48:00	5.47753906	87.2680664	89.3703461	48.2080078	1361.43738	2238.02124	11.0827627	0	627.918213	549.849731	0 42.9510117	147.241813
03/06/03	15:49:00	5.47753906	87.2680664	92.0947571	48.2080078	1361.43738	2272.8396	11.0827627	0	627.918213	549.849731	0 42.9510117	144.55627
03/06/03	15:50:00	5.47753906	87.2680664	108.143173	48.2080078	1361.43738	2235.66064	11.2841797	0	627.918213	549.849731	0 41.942524	163.690791
03/06/03	15:51:00	5.47753906	87.2680664	112.255592	47.7246094	1361.43738	2235.66064	11.192626	0	627.918213	549.849731	0 42.9730072	159.427482
03/06/03	15:52:00	5.47753906	87.2680664	113.230049	47.7246094	1361.43738	2244.17139	11.192626	0	627.918213	549.849731	0 41.9506683	161.240234
03/06/03	15:53:00	5.47753906	87.2680664	113.593307	47.7246094	1361.43738	2203.48608	11.394042	0	627.918213	549.849731	0 40.8093605	171.143184
03/06/03	15:54:00	5.47753906	87.2680664	118.909225	47.2412109	1361.43738	2238.18188	11.1804199	0	627.918213	549.849731	0 40.8093605	181.952503
03/06/03	15:55:00	5.47753906	87.2680664	127.599922	47.2412109	1361.43738	2196.7417	11.3879385	0	627.918213	549.849731	0 40.8093605	188.297107
03/06/03	15:56:00	5.47753906	87.2680664	124.660179	47.2412109	1361.43738	2196.7417	11.3879385	0	627.918213	549.849731	0 41.8422012	193.231796
03/06/03	15:57:00	5.47753906	87.2680664	121.76226	47.2412109	1361.43738	2196.7417	11.5893555	0	627.918213	549.849731	0 40.8173981	181.180408
03/06/03	15:58:00	5.47753906	87.2680664	124.880318	47.2412109	1361.43738	2237.05176	11.5893555	0	627.918213	549.849731	0 40.755909	171.84814
03/06/03	15:59:00	5.47753906	87.2680664	128.991455	47.2412109	1361.43738	2239.00439	11.5893555	0	627.918213	549.849731	0 38.6620598	169.464713
03/06/03	16:00:00	5.47753906	87.2680664	119.024658	47.2412109	1361.43738	2239.00439	11.6870117	0	627.918213	549.849731	0 38.6620598	163.120117
03/06/03	16:01:00	5.47753906	87.2680664	113.834854	47.2412109	1361.43738	2240.32446	11.4855957	0	627.918213	549.849731	0 38.6620598	166.208488
03/06/03	16:02:00	5.47753906	87.2680664	114.075867	47.2412109	1361.43738	2240.32446	11.4855957	0	627.918213	549.849731	0 39.7120056	159.226066
03/06/03	16:03:00	5.47753906	87.2680664	117.51516	47.2412109	1361.43738	2240.32446	11.4855957	0	627.918213	549.849731	0 39.7120056	150.128776
03/06/03	16:04:00	5.47753906	87.2680664	109.405685	47.2412109	1361.43738	2240.32446	11.4855957	0	627.918213	549.849731	0 39.7120056	157.614738
03/06/03	16:05:00	5.47753906	87.2680664	114.19619	47.2412109	1361.43738	2240.32446	11.4855957	0	627.918213	549.849731	0 40.7468567	150.263053
03/06/03	16:06:00	5.47753906	87.2680664	113.593307	47.2412109	1361.43738	2240.32446	11.4916983	0	627.918213	549.849731	0 40.7468567	156.607658
03/06/03	16:07:00	5.47753906	87.2680664	119.94413	47.2412109	1361.43738	2240.32446	11.4916983	0	627.918213	549.849731	0 40.7468567	153.854972
03/06/03	16:08:00	5.47753906	87.2680664	119.714935	47.2412109	1361.43738	2275.13501	11.4916983	0	627.918213	549.849731	0 41.8311882	162.650142
03/06/03	16:09:00	5.47753906	87.2680664	120.515244	47.2412109	1361.43738	2239.67969	11.4855957	0	627.918213	549.849731	0 41.8311882	161.173087
03/06/03	16:10:00	5.47753906	87.2680664	129.840363	47.2412109	1361.43738	2239.67969	11.3879385	0	627.918213	549.849731	0 41.8311882	164.429321
03/06/03	16:11:00	5.47753906	87.2680664	134.10675	46.7138672	1361.43738	2239.67969	11.3879385	0	627.918213	549.849731	0 40.8299484	170.035392
03/06/03	16:12:00	5.47753906	87.2680664	137.943176	46.7138672	1361.43738	2239.67969	11.595458	0	627.918213	549.849731	0 41.8303108	163.657218
03/06/03	16:13:00	5.47753906	87.2680664	132.561798	46.7138672	1361.43738	2203.51685	11.394042	0	627.918213	549.849731	0 40.7592659	169.699706
03/06/03	16:14:00	5.47753906	87.2680664	138.241516	46.7138672	1361.43738	2238.11279	11.394042	0	627.918213	549.849731	0 41.7926064	176.346416
03/06/03	16:15:00	5.47753906	87.2680664	136.340988	46.7138672	1361.43738	2238.33887	11.595458	0	627.918213	549.849731	0 40.7880325	173.996578
03/06/03	16:16:00	5.47753906	87.2680664	141.092957	46.7138672	1361.43738	2238.33887	11.5893555	0	627.918213	542.316833	0 40.7880325	183.362426

DATE	TIME	MAJI007 Generator Megawatts MW	MAJI008 Generator Megavars MVAR	NAJT101 13.8 kv NAA01 Gen Aux Load MW	NAJT201 13.8 kv NAA02 Gen Aux Load MW	AEFI135 FW Flow Comp. KPPH	AEFI131 SH Spray Flow KPPH	FDFI002 Sootblower Steam Flow KPPH	FDFI022 SCR Sootblower Stm Flow KPPH	AAFY018A Cont. Blowdown Flow PCT	FBFI021 MS to Aux Stm. Flow KPPH	AETE137 Feedwater Temp. DEG F	AAPTOO6 Selected Drum Pressure PSIG	FDPT002 Sootblower Steam Pressure PSIG	FDTT002 Sootblower Steam Temp. DEG F	FDPT022 A.H. Sootblower Stm. Press PSIG
03/06/03	16:17:00	216.186508	5.21239567	14.1430655	7.8808589	1361.09021	92.4044647	0	1.952003	0	0	366.113068	2476.74561	318.237274	679.992676	380.493164
03/06/03	16:18:00	216.186508	5.21239567	14.1430655	7.84423828	1330.84912	115.309494	0	1.952003	0	0	366.113068	2476.74561	318.237274	679.992676	380.493164
03/06/03	16:19:00	216.186508	5.21239567	14.1430655	8.15551758	1330.84912	89.6289215	0	1.952003	0	0	366.113068	2476.74561	318.237274	679.992676	380.493164
03/06/03	16:20:00	216.186508	5.21239567	14.1430655	8.00903416	1330.84912	89.6289215	0	1.952003	0	0	366.113068	2476.74561	318.237274	679.992676	380.493164
03/06/03	16:21:00	216.186508	5.21239567	14.1430655	8.0273428	1363.34656	85.5428696	0	1.952003	0	0	366.113068	2476.74561	318.237274	679.992676	380.493164
03/06/03	16:22:00	216.186508	5.21239567	14.1430655	7.67944336	1363.34656	89.3937454	0	1.952003	0	0	366.113068	2476.74561	318.237274	679.992676	380.493164
03/06/03	16:23:00	216.186508	5.21239567	14.1430655	7.99987841	1363.34656	119.610886	0	1.952003	0	0	366.113068	2476.74561	318.237274	679.992676	380.493164
03/06/03	16:24:00	216.186508	5.21239567	14.1430655	8.27453613	1363.34656	91.9477005	0	1.952003	0	0	366.113068	2476.74561	318.237274	679.992676	380.493164
03/06/03	16:25:00	216.186508	5.21239567	14.1430655	7.89001417	1363.34656	91.9477005	0	1.952003	0	0	366.113068	2476.74561	318.237274	679.992676	380.493164
03/06/03	16:26:00	216.186508	5.21239567	14.1430655	7.94494534	1363.34656	91.9477005	0	1.952003	0	0	366.113068	2476.74561	318.237274	679.992676	380.493164
03/06/03	16:27:00	216.186508	5.21239567	14.1430655	7.94494534	1363.34656	91.9477005	0	1.952003	0	0	366.113068	2476.74561	318.237274	679.992676	380.493164
03/06/03	16:28:00	216.186508	5.21239567	14.1430655	7.99987841	1363.34656	91.9477005	0	1.952003	0	0	366.113068	2476.74561	318.237274	679.992676	380.493164
03/06/03	16:29:00	216.186508	5.21239567	14.1430655	8.03649807	1363.34656	91.9477005	0	1.952003	0	0	366.113068	2476.74561	318.237274	669.921875	380.493164
03/06/03	16:30:00	216.186508	5.21239567	14.1430655	8.03649807	1363.34656	91.9477005	0	1.952003	0	0	366.113068	2476.74561	318.237274	669.921875	380.493164
03/06/03	16:31:00	216.186508	5.21239567	14.1430655	7.8808589	1363.34656	91.9477005	0	1.952003	0	0	366.113068	2476.74561	318.237274	669.921875	380.493164
03/06/03	16:32:00	216.186508	5.21239567	14.1430655	7.89001417	1363.34656	91.9477005	0	1.952003	0	0	366.113068	2476.74561	318.237274	669.921875	380.493164
03/06/03	16:33:00	216.186508	5.21239567	14.1430655	7.91748047	1363.34656	91.9477005	0	1.952003	0	0	366.113068	2476.74561	318.237274	669.921875	380.493164
03/06/03	16:34:00	216.186508	5.21239567	14.1430655	7.94494534	1363.34656	87.969429	0	1.952003	0	0	366.113068	2476.74561	318.237274	669.921875	380.493164
03/06/03	16:35:00	216.186508	5.21239567	14.1430655	7.56042385	1363.34656	87.969429	0	1.952003	0	0	366.113068	2476.74561	318.237274	669.921875	380.493164
03/06/03	16:36:00	216.186508	5.21239567	14.1430655	7.99072266	1363.34656	87.969429	0	1.952003	0	0	366.113068	2476.74561	318.237274	669.921875	380.493164
03/06/03	16:37:00	216.186508	5.21239567	14.1430655	7.67028761	1363.34656	87.969429	0	1.952003	0	0	366.113068	2476.74561	318.237274	669.921875	380.493164
03/06/03	16:38:00	216.186508	5.21239567	14.1430655	8.05480957	1363.34656	87.969429	0	1.952003	0	0	366.113068	2476.74561	318.237274	669.921875	380.493164
03/06/03	16:39:00	216.186508	5.21239567	14.1430655	7.67028761	1393.46155	87.969429	0	1.952003	0	0	366.113068	2476.74561	318.237274	669.921875	380.493164
03/06/03	16:40:00	216.186508	5.21239567	14.1430655	7.98156738	1393.46155	87.969429	0	1.952003	0	0	366.113068	2476.74561	318.237274	669.921875	380.493164
03/06/03	16:41:00	216.186508	5.21239567	14.1430655	7.84423828	1363.37463	91.9477005	0	1.952003	0	0	366.113068	2476.74561	318.237274	669.921875	380.493164
03/06/03	16:42:00	216.186508	5.21239567	14.1430655	7.56957912	1363.37463	91.9477005	0	1.952003	0	0	366.113068	2476.74561	318.237274	669.921875	380.493164
03/06/03	16:43:00	216.186508	5.21239567	14.1430655	8.24706936	1363.37463	91.9477005	0	1.952003	0	0	366.113068	2476.74561	318.237274	669.921875	380.493164
03/06/03	16:44:00	216.186508	5.21239567	14.1430655	8.21044922	1363.37463	91.9477005	0	1.952003	0	0	366.113068	2476.74561	318.237274	669.921875	380.493164
03/06/03	16:45:00	216.186508	5.21239567	14.1430655	7.68859863	1363.37463	91.9477005	0	1.952003	0	0	366.113068	2476.74561	318.237274	669.921875	380.493164
03/06/03	16:46:00	216.186508	5.21239567	14.1430655	7.61535645	1363.37463	87.7297821	0	1.952003	0	0	366.113068	2476.74561	318.237274	669.921875	380.493164
03/06/03	16:47:00	216.186508	5.21239567	14.1430655	7.4322505	1363.37463	91.9477005	0	1.952003	0	0	366.113068	2476.74561	318.237274	669.921875	380.493164
03/06/03	16:48:00	216.186508	5.21239567	14.1430655	7.93579006	1363.37463	91.9477005	0	1.952003	0	0	366.113068	2476.74561	318.237274	669.921875	380.493164
03/06/03	16:49:00	216.186508	5.21239567	14.1430655	7.55127001	1363.37463	91.9477005	0	1.952003	0	0	366.113068	2476.74561	318.237274	669.921875	380.493164
03/06/03	16:50:00	216.186508	5.21239567	14.1430655	7.99072266	1363.37463	91.9477005	0	1.952003	0	0	366.113068	2476.74561	318.237274	669.921875	380.493164
03/06/03	16:51:00	216.186508	5.21239567	14.1430655	7.64282131	1363.37463	91.9477005	0	1.952003	0	0	366.113068	2476.74561	318.237274	669.921875	380.493164
03/06/03	16:52:00	216.186508	5.21239567	14.1430655	8.22875977	1363.37463	87.7297821	0	1.952003	0	0	366.113068	2476.74561	318.237274	669.921875	380.493164
03/06/03	16:53:00	216.186508	5.21239567	14.1430655	7.87170315	1363.37463	87.7297821	0	1.952003	0	0	366.113068	2476.74561	318.237274	669.921875	380.493164

DATE	TIME	FDTT022 SCR/AH Sootblower Stm Temp DEG F	ABPIOO7 Turbine Throttle Pressure PSIG	ABTE008 Main Stm Temp DEG F	AEFI111 Reheater Spray Flow KPPH	ABPI010 Cold Reheat Stm Press PSIG	ABTE016 Cold Reheat Temp DEG F	ABPT024 Hot Reheat Pressure PSIG	ABTE022 Hot Reheat Temp DEG F	AETE119 BFP Hdr Discharge Temp DEG F	AETE130 FW Htr #7 Outlet Temp DEG F	AETE035 FW Htr #7 Casc Drain Temp DEG F	AFPT026 Cold Reheat Ext Hdr Press PSIG	AFTE027 Cold Reheat Ext Hdr Temp DEG F	AFTI017 HP Aux Steam Temp DEG F	AFFI017 Spray Flow to HP Aux Steam KPPH
03/06/03	16:17:00	823.730469	2410.40039	1004.18054	0	355.98053	591.468689	325.866669	917.099609	359.659821	360.644318	352.935913	137.878418	389.448151	387.571777	0
03/06/03	16:18:00	823.730469	2414.06226	1007.4491	0	355.98053	591.468689	325.866669	918.72113	359.659821	360.644318	352.935913	137.878418	389.448151	387.571777	0
03/06/03	16:19:00	823.730469	2414.06226	1007.4491	0	355.98053	591.468689	325.866669	918.72113	359.659821	360.644318	352.935913	137.878418	389.448151	387.571777	0
03/06/03	16:20:00	823.730469	2421.38672	1007.4491	0	355.98053	591.468689	325.866669	918.72113	359.659821	360.644318	352.935913	137.878418	389.448151	387.571777	0
03/06/03	16:21:00	823.730469	2417.72437	1010.71802	0	355.98053	591.468689	325.866669	920.342529	359.659821	360.644318	352.935913	137.878418	381.519714	387.571777	0
03/06/03	16:22:00	823.730469	2425.04883	1010.71802	0	355.98053	591.468689	325.866669	920.342529	359.659821	360.644318	352.935913	137.878418	381.519714	387.571777	0
03/06/03	16:23:00	823.730469	2417.72437	1010.71802	0	355.98053	591.468689	325.866669	920.342529	359.659821	360.644318	352.935913	137.878418	381.519714	387.571777	0
03/06/03	16:24:00	823.730469	2421.38672	1004.19183	0	355.98053	591.468689	325.866669	920.342529	359.659821	360.644318	352.935913	137.878418	381.519714	387.571777	0
03/06/03	16:25:00	823.730469	2417.72437	1000.91229	0	355.98053	591.468689	325.866669	920.342529	359.659821	360.644318	352.935913	137.878418	381.519714	387.571777	0
03/06/03	16:26:00	823.730469	2417.72437	1002.53516	0	355.98053	591.468689	325.866669	920.342529	359.659821	360.644318	352.935913	137.878418	381.519714	387.571777	0
03/06/03	16:27:00	823.730469	2417.72437	1002.53516	0	355.98053	591.468689	325.866669	920.342529	359.659821	360.644318	352.935913	137.878418	381.519714	387.571777	0
03/06/03	16:28:00	823.730469	2417.72437	1004.15814	0	355.98053	591.468689	325.866669	920.342529	359.659821	360.644318	352.935913	137.878418	381.519714	387.571777	0
03/06/03	16:29:00	823.730469	2418.64014	1005.80371	0	355.98053	591.468689	325.866669	921.963989	359.659821	360.644318	352.935913	137.878418	381.519714	387.571777	0
03/06/03	16:30:00	823.730469	2422.302	1007.43793	0	355.98053	591.468689	325.866669	921.963989	359.659821	360.644318	352.935913	137.878418	381.519714	387.571777	0
03/06/03	16:31:00	823.730469	2422.302	1007.43793	0	355.98053	591.468689	325.866669	921.963989	359.659821	360.644318	352.935913	137.878418	381.519714	387.571777	0
03/06/03	16:32:00	823.730469	2425.96411	1007.43793	0	355.98053	591.468689	325.866669	921.963989	359.659821	360.644318	352.935913	137.878418	381.519714	387.571777	0
03/06/03	16:33:00	823.730469	2425.96411	1007.43793	0	355.98053	591.468689	325.866669	921.963989	359.659821	360.644318	352.935913	137.878418	381.519714	387.571777	0
03/06/03	16:34:00	823.730469	2425.96411	1007.43793	0	355.98053	591.468689	325.866669	921.963989	359.659821	360.644318	352.935913	137.878418	381.519714	387.571777	0
03/06/03	16:35:00	823.730469	2425.96411	1004.14691	0	355.98053	591.468689	325.866669	920.320068	359.659821	360.644318	352.935913	137.878418	381.519714	387.571777	0
03/06/03	16:36:00	823.730469	2425.96411	1002.50146	0	355.98053	591.468689	325.866669	918.665039	359.659821	360.644318	352.935913	137.878418	381.519714	387.571777	0
03/06/03	16:37:00	823.730469	2425.96411	1000.86731	0	355.98053	579.309448	325.866669	918.665039	359.659821	360.644318	352.935913	137.878418	381.519714	387.571777	0
03/06/03	16:38:00	823.730469	2422.302	999.233215	0	355.98053	579.309448	325.866669	917.032349	359.659821	360.644318	352.935913	137.878418	381.519714	387.571777	0
03/06/03	16:39:00	823.730469	2418.64014	999.233215	0	355.98053	579.309448	325.866669	917.032349	359.659821	360.644318	352.935913	137.878418	373.575897	387.571777	0
03/06/03	16:40:00	823.730469	2422.302	1000.85608	0	355.98053	579.309448	325.866669	917.032349	359.659821	360.644318	352.935913	137.878418	373.575897	387.571777	0
03/06/03	16:41:00	823.730469	2418.64014	1000.85608	0	355.98053	579.309448	325.866669	917.032349	359.659821	360.644318	352.935913	137.878418	373.575897	387.571777	0
03/06/03	16:42:00	823.730469	2414.97803	1000.85608	0	355.98053	579.309448	325.866669	917.032349	359.659821	360.644318	352.935913	137.878418	373.575897	387.571777	0
03/06/03	16:43:00	823.730469	2418.64014	1002.49023	0	355.98053	579.309448	325.866669	918.65387	359.659821	360.644318	352.935913	137.878418	373.575897	387.571777	0
03/06/03	16:44:00	823.730469	2418.64014	1002.49023	0	355.98053	579.309448	325.866669	918.65387	359.659821	360.644318	352.935913	137.878418	373.575897	387.571777	0
03/06/03	16:45:00	823.730469	2422.302	1000.84485	0	355.98053	579.309448	325.866669	917.009888	359.659821	360.644318	352.935913	137.878418	373.575897	387.571777	0
03/06/03	16:46:00	823.730469	2422.302	1000.84485	0	355.98053	579.309448	325.866669	917.009888	359.659821	360.644318	352.935913	137.878418	373.575897	387.571777	0
03/06/03	16:47:00	823.730469	2422.302	1000.84485	0	355.98053	579.309448	325.866669	917.009888	359.659821	360.644318	352.935913	137.878418	373.575897	387.571777	0
03/06/03	16:48:00	823.730469	2425.96411	1000.84485	0	355.98053	579.309448	325.866669	917.009888	359.659821	360.644318	352.935913	137.878418	373.575897	387.571777	0
03/06/03	16:49:00	823.730469	2425.96411	1000.84485	0	355.98053	579.309448	325.866669	917.009888	359.659821	360.644318	352.935913	137.878418	365.703033	387.571777	0
03/06/03	16:50:00	823.730469	2425.96411	997.554321	0	355.98053	579.309448	325.866669	915.354797	359.659821	360.644318	352.935913	137.878418	365.703033	387.571777	0
03/06/03	16:51:00	823.730469	2425.96411	997.554321	0	355.98053	579.309448	325.866669	915.354797	359.659821	360.644318	352.935913	137.878418	365.703033	387.571777	0
03/06/03	16:52:00	823.730469	2429.62646	997.554321	0	355.98053	579.309448	325.866669	916.976196	359.659821	360.644318	352.935913	137.878418	365.703033	387.571777	0
03/06/03	16:53:00	823.730469	2433.28857	997.554321	0	355.98053	579.309448	325.866669	916.964966	359.659821	360.644318	352.935913	137.878418	365.703033	387.571777	0

DATE	TIME	AETE055 BFBP Discharge Hdr Temp DEG F	AFPY044A DA Pegging Stm Valve PCT	ASFI006 Caulkins LP Stm Flow Output KPPH	ASFI016 Caulkins HP Stm Flow Output KPPH	MAJI002 Unit Megavars MVAR	MAJI004 Unit Megawatts MW	ADPT003C Absolute Cond Vac Calculated IN HGA	DALT004A Cooling Twr Basin Level IN	DAFI027 Cooling Twr Blow-Down Flow GPM	EAFI034 Cooling Twr Blow-Down SDA GPM	DATE014A Water Box Inlet A Temp DEG F	DATE014B Water Box Inlet B Temp DEG F	DATE016A Water Box Outlet A Temp DEG F	DATE016B Water Box Outlet B Temp DEG F	ABFI018 Main Steam Flow KPPH
03/06/03	16:17:00	253.002487	0	85.4338989	15.3763161	-2.3193359	216.949463	2.36450195	59.1357422	0	237.762009	82.2182236	80.8051147	94.7281494	95.1799316	1360.83435
03/06/03	16:18:00	253.002487	0	85.4338989	15.0130014	-2.3193359	216.949463	2.36450195	59.1357422	0	234.50589	80.7756805	82.2035599	94.7281494	95.1799316	1360.83435
03/06/03	16:19:00	253.002487	0	85.4338989	15.0130014	-2.3193359	216.949463	2.36450195	59.1357422	0	234.50589	82.2035599	80.7756805	94.7281494	95.697464	1360.83435
03/06/03	16:20:00	253.002487	0	85.4338989	15.0130014	-2.3193359	216.949463	2.36450195	59.1357422	0	234.50589	82.1888275	82.2035599	94.7281494	95.697464	1360.83435
03/06/03	16:21:00	253.002487	0	87.9813461	15.0130014	-2.3193359	216.949463	2.36450195	59.1357422	0	234.50589	80.760994	80.760994	94.7281494	95.697464	1360.83435
03/06/03	16:22:00	253.002487	0	90.1382446	15.0130014	-2.3193359	216.949463	2.36450195	59.1357422	0	234.50589	82.1741486	82.1594238	94.7281494	95.6537476	1360.83435
03/06/03	16:23:00	253.002487	0	90.1382446	15.0130014	-2.3193359	216.949463	2.36450195	59.1357422	0	234.50589	82.1594238	80.7315063	94.7281494	95.6537476	1360.83435
03/06/03	16:24:00	253.002487	0	84.7626572	15.0130014	-2.3193359	216.949463	2.36450195	59.1357422	0	234.50589	82.1594238	82.1594238	94.7281494	95.6537476	1360.83435
03/06/03	16:25:00	253.002487	0	84.7626572	15.0130014	-2.3193359	216.949463	2.36450195	59.1357422	0	231.271576	82.1299591	82.1594238	94.7281494	95.6537476	1360.83435
03/06/03	16:26:00	253.002487	0	84.7626572	14.9880018	-2.3193359	216.949463	2.36450195	59.1357422	0	228.060013	82.1299591	82.1594238	94.7281494	95.6537476	1360.83435
03/06/03	16:27:00	253.002487	0	96.5255585	14.9880018	-2.3193359	216.949463	2.36450195	59.1357422	0	228.060013	82.1300735	82.1594238	94.7281494	95.6392059	1360.83435
03/06/03	16:28:00	253.002487	0	96.5255585	14.9880018	-2.3193359	216.949463	2.36450195	59.1357422	0	228.060013	82.1447449	82.1594238	94.7281494	95.6392059	1360.83435
03/06/03	16:29:00	253.002487	0	98.8855133	14.9880018	-2.3193359	216.949463	2.36450195	59.1357422	0	228.060013	82.1153412	82.1153412	94.7281494	95.6392059	1360.83435
03/06/03	16:30:00	253.002487	0	98.8855133	14.5679073	-2.3193359	216.949463	2.36450195	59.1357422	0	228.060013	82.1153412	82.1153412	94.7281494	95.6392059	1360.83435
03/06/03	16:31:00	253.002487	0	98.8855133	14.9755974	-2.3193359	216.949463	2.36450195	59.1357422	0	231.271576	82.1153412	82.1153412	94.7281494	95.5954819	1360.83435
03/06/03	16:32:00	253.002487	0	96.4042282	14.9755974	-2.3193359	216.949463	2.36450195	59.1357422	0	234.50589	82.0712051	82.0712051	94.7281494	95.5663528	1360.83435
03/06/03	16:33:00	253.002487	0	96.4042282	14.8278713	-2.3193359	216.949463	2.36450195	59.1357422	0	237.762009	82.0712051	82.0712051	94.7281494	96.9795151	1360.83435
03/06/03	16:34:00	253.002487	0	96.4042282	14.8928976	-2.3193359	216.949463	2.36450195	59.1357422	0	240.973953	82.0417862	82.0564651	94.7281494	95.5372162	1360.83435
03/06/03	16:35:00	253.002487	0	101.102798	14.8928976	-2.3193359	216.949463	2.36450195	59.1357422	0	244.207718	82.0565262	82.0564651	94.7281494	95.5372162	1360.83435
03/06/03	16:36:00	253.002487	0	101.102798	14.8928976	-2.3193359	216.949463	2.36450195	59.1357422	0	250.737366	82.0417862	82.0564651	94.7281494	95.5372162	1360.83435
03/06/03	16:37:00	253.002487	0	101.102798	14.8721609	-2.3193359	216.949463	2.36450195	59.1357422	0	253.969864	82.0417862	82.0564651	94.7281494	95.5372162	1360.83435
03/06/03	16:38:00	253.002487	0	95.5876007	14.8721609	-2.3193359	216.949463	2.36450195	59.1357422	0	257.222565	82.0123749	82.0564651	94.7281494	96.9213028	1360.83435
03/06/03	16:39:00	253.002487	0	95.5876007	14.8721609	-2.3193359	216.949463	2.36450195	59.1357422	0	257.222565	82.0123749	82.0417862	94.7281494	95.5080872	1360.83435
03/06/03	16:40:00	253.002487	0	101.134674	14.8721609	-2.3193359	216.949463	2.36450195	59.1357422	0	260.49469	82.0123749	82.0123749	94.7281494	95.5080872	1360.83435
03/06/03	16:41:00	253.002487	0	107.340904	14.8721609	-2.3193359	216.949463	2.36450195	59.1357422	0	260.49469	82.0271072	82.0271072	94.7281494	95.5226822	1360.83435
03/06/03	16:42:00	253.002487	0	111.73912	14.8721609	-2.3193359	216.949463	2.36450195	59.1357422	0	260.49469	82.0271072	82.0271683	94.8155518	95.5081406	1360.83435
03/06/03	16:43:00	253.002487	0	111.73912	15.2768583	-2.3193359	216.949463	2.36450195	59.1357422	0	260.49469	82.0271072	82.0271683	94.8155518	95.5081406	1360.83435
03/06/03	16:44:00	253.002487	0	105.25621	15.2768583	-2.3193359	216.949463	2.36450195	59.1357422	0	260.49469	82.0271072	82.0124359	94.8155518	95.5081406	1360.83435
03/06/03	16:45:00	253.002487	0	105.25621	14.86481	-2.3193359	216.949463	2.36450195	59.1357422	0	263.726105	81.9977036	80.5696182	94.8155518	95.4935989	1360.83435
03/06/03	16:46:00	253.002487	0	105.25621	14.86481	-2.3193359	216.949463	2.36450195	59.1357422	0	266.976959	81.9977036	81.9977036	96.1857452	95.4935989	1360.83435
03/06/03	16:47:00	253.002487	0	111.502098	14.86481	-2.3193359	216.949463	2.36450195	59.1357422	0	270.188599	80.5401764	81.9977036	94.7572556	95.4644089	1360.83435
03/06/03	16:48:00	253.002487	0	113.742409	14.86481	-2.3193359	216.949463	2.36450195	59.1357422	0	273.419708	81.9682846	80.5401764	94.7572556	95.4644089	1360.83435
03/06/03	16:49:00	253.002487	0	113.742409	14.86481	-2.3193359	216.949463	2.36450195	59.1357422	0	276.669617	81.9682846	81.9830246	94.7572556	95.4644089	1360.83435
03/06/03	16:50:00	253.002487	0	108.629059	15.6099777	-2.3193359	216.949463	2.36450195	59.1357422	0	279.881683	81.9830246	81.9830856	94.7572556	95.4935989	1360.83435
03/06/03	16:51:00	253.002487	0	108.629059	15.1232862	-2.3193359	216.949463	2.36450195	59.1357422	0	283.167938	81.9830856	81.9830856	94.7572556	96.8923187	1360.83435
03/06/03	16:52:00	253.002487	0	108.629059	15.1232862	-2.3193359	216.949463	2.36450195	59.1357422	0	286.416351	81.9683456	80.5402298	94.7572556	95.4790649	1360.83435
03/06/03	16:53:00	253.002487	0	108.629059	15.1232862	-2.3193359	216.949463	2.36450195	59.1357422	0	289.628204	81.9683456	81.9683456	94.7572556	96.8777313	1360.83435

DATE	TIME	MBEL100 Excitation Losses KW	BATI013 AH Gas Outlet Temp DEG F	BAAI046 Excess Oxygen PCT	RMAT500 Relative Humidity PCT	BATI011 AH Air Inlet Temp DEG F	JCFT152 Coal Fdr A Flow Rate KPPH	JCFT252 Coal Fdr B Flow Rate KPPH	JCFT352 Coal Fdr C Flow Rate KPPH	JCFT452 Coal Fdr D Flow Rate KPPH	NAET102 13.8 Kv NAA01 Aux Scr Volts VOLTS	NAET202 13.8 Kv NAAO2 Aux Scr Volts VOLTS	NAIT101 13.8 Kv NAAO1 Aux Scr Current AMPS	NAIT201 13.8 Kv NAA02 Aux Scr Current AMPS	MAII006A Generator Arm Current Phase A KA	MAII006B Generator Arm Current Phase B KA
03/06/03	16:17:00	587.671143	256.127533	3.81596065	10.2172852	109.496567	69.1125412	0.02685483	70.0860596	33.260498	13995.4824	14231.6885	0.29296178	-1.1718806	5.16503906	5.26269484
03/06/03	16:18:00	587.671143	256.127533	3.81596065	8.17260742	109.496567	66.8298264	0.02685483	67.7026291	33.1933594	13995.4824	14231.6885	0.29296178	-1.1718806	5.16503906	5.26269484
03/06/03	16:19:00	587.671143	256.127533	3.81596065	9.17968655	109.496567	69.0789719	0.02685483	69.8846436	33.0926476	13995.4824	14231.6885	0.29296178	-1.1718806	5.16503906	5.26269484
03/06/03	16:20:00	587.671143	256.127533	3.81596065	7.16552734	109.496567	61.1901855	0.02685483	61.7272949	34.8718262	13995.4824	14231.6885	0.29296178	-1.1718806	5.16503906	5.26269484
03/06/03	16:21:00	587.671143	256.127533	4.07989454	7.04345703	109.496567	69.4482422	0.09399503	68.8439865	33.4619141	13995.4824	14231.6885	0.29296178	-1.1718806	5.16503906	5.26269484
03/06/03	16:22:00	587.671143	256.127533	4.07989454	5.97534084	109.496567	63.9093018	0.09399503	63.9428711	32.8240929	13995.4824	14231.6885	0.29296178	-1.1718806	5.16503906	5.26269484
03/06/03	16:23:00	587.671143	256.127533	4.33072948	6.98242044	109.496567	70.5224533	0.09399503	70.4217529	32.7233887	13995.4824	14231.6885	0.29296178	-1.1718806	5.16503906	5.26269484
03/06/03	16:24:00	587.671143	256.127533	4.33072948	9.17968655	109.496567	68.3404541	0.09399503	67.03125	32.4548302	13995.4824	14231.6885	0.29296178	-1.1718806	5.16503906	5.26269484
03/06/03	16:25:00	587.671143	256.127533	4.33072948	7.13500881	109.496567	70.6903076	0.09399503	70.8917236	33.4954834	13995.4824	14231.6885	0.29296178	-1.1718806	5.16503906	5.26269484
03/06/03	16:26:00	587.671143	256.127533	4.077847	8.17260742	109.496567	69.7839355	0.09399503	69.3139648	36.5838623	13995.4824	14231.6885	0.29296178	-1.1718806	5.16503906	5.26269484
03/06/03	16:27:00	587.671143	256.127533	4.077847	9.17968655	109.496567	67.53479	0.09399503	67.5683594	32.9248047	13995.4824	14231.6885	0.29296178	-1.1718806	5.16503906	5.26269484
03/06/03	16:28:00	587.671143	256.127533	4.077847	8.17260742	109.496567	66.8298264	0.09399503	67.8033447	32.6226807	13995.4824	14231.6885	0.29296178	-1.1718806	5.16503906	5.26269484
03/06/03	16:29:00	587.671143	256.127533	4.077847	8.17260742	109.496567	66.52771	0.09399503	68.3068848	32.4883995	13995.4824	14231.6885	0.29296178	-1.1718806	5.16503906	5.26269484
03/06/03	16:30:00	587.671143	256.127533	4.08531284	9.17968655	109.496567	66.1584473	0.09399503	65.6549072	33.3276329	13995.4824	14231.6885	0.29296178	-1.1718806	5.16503906	5.26269484
03/06/03	16:31:00	587.671143	256.127533	4.08531284	10.1867666	109.496567	63.0700684	0.09399503	63.1707764	32.7569542	13995.4824	14231.6885	0.29296178	-1.1718806	5.16503906	5.26269484
03/06/03	16:32:00	587.671143	256.127533	4.08531284	10.1867666	109.496567	62.5665283	0.09399503	61.8279991	35.7110596	13995.4824	14231.6885	0.29296178	-1.1718806	5.16503906	5.26269484
03/06/03	16:33:00	587.671143	256.127533	4.08531284	7.71484184	109.496567	64.4799805	0.09399503	65.0506592	33.260498	13995.4824	14231.6885	0.29296178	-1.1718806	5.16503906	5.26269484
03/06/03	16:34:00	587.671143	256.127533	4.08531284	7.71484184	109.496567	63.5400352	0.09399503	64.3121262	33.15979	13995.4824	14231.6885	0.29296178	-1.1718806	5.16503906	5.26269484
03/06/03	16:35:00	587.671143	256.127533	4.3374176	5.57861185	109.496567	62.3986778	0.09399503	62.532959	32.5219688	13995.4824	14231.6885	0.29296178	-1.1718806	5.16503906	5.26269484
03/06/03	16:36:00	587.671143	256.127533	4.3374176	6.67724657	109.496567	64.0771408	0.09399503	62.6336632	33.0590782	13995.4824	14231.6885	0.29296178	-1.1718806	5.16503906	5.26269484
03/06/03	16:37:00	587.671143	256.127533	4.08653116	5.60912991	109.496567	63.7078857	0.09399503	64.6142502	33.4619141	13995.4824	14231.6885	0.29296178	-1.1718806	5.16503906	5.26269484
03/06/03	16:38:00	587.671143	256.127533	4.3462739	5.60912991	109.496567	68.0383301	0.09399503	67.4676514	34.6032715	13995.4824	14231.6885	0.29296178	-1.1718806	5.16503906	5.26269484
03/06/03	16:39:00	587.671143	256.127533	4.08848763	5.57861185	109.496567	68.3068848	0.09399503	68.8104172	33.0590782	13995.4824	14231.6885	0.29296178	-1.1718806	5.16503906	5.26269484
03/06/03	16:40:00	587.671143	256.127533	4.08848763	6.61620998	109.496567	65.4199219	0.09399503	69.4818115	33.260498	13995.4824	14231.6885	0.29296178	-1.1718806	5.16503906	5.26269484
03/06/03	16:41:00	587.671143	256.127533	4.08848763	6.67724657	109.496567	69.3810959	0.09399503	70.3881836	32.8912354	13995.4824	14231.6885	0.29296178	-1.1718806	5.16503906	5.26269484
03/06/03	16:42:00	587.671143	256.127533	4.08848763	6.70776176	109.496567	71.1602783	0.09399503	70.9588623	32.4212646	13995.4824	14231.6885	0.29296178	-1.1718806	5.16503906	5.26269484
03/06/03	16:43:00	587.671143	256.127533	3.83077693	5.60912991	109.496567	66.628418	0.09399503	66.0913086	33.4954834	13995.4824	14231.6885	0.29296178	-1.1718806	5.16503906	5.26269484
03/06/03	16:44:00	587.671143	256.127533	4.08256912	4.47997999	109.496567	70.2539063	0.09399503	71.1938477	36.7852783	13995.4824	14231.6885	0.29296178	-1.1718806	5.16503906	5.26269484
03/06/03	16:45:00	587.671143	256.127533	3.82446837	4.47997999	109.496567	66.0913086	0.09399503	64.5135498	32.9919434	13995.4824	14231.6885	0.29296178	-1.1718806	5.16503906	5.26269484
03/06/03	16:46:00	587.671143	256.127533	4.07851458	5.51757813	109.496567	61.7608643	0.09399503	61.9287071	32.7569542	13995.4824	14231.6885	0.29296178	-1.1718806	5.16503906	5.26269484
03/06/03	16:47:00	587.671143	256.127533	4.07851458	4.35790968	109.496567	65.1513596	0.09399503	65.4199219	32.5555382	13995.4824	14231.6885	0.29296178	-1.1718806	5.16503906	5.26269484
03/06/03	16:48:00	587.671143	256.127533	4.07851458	3.35083008	109.496567	61.4251709	0.09399503	62.2644043	32.7233887	13995.4824	14231.6885	0.29296178	-1.1718806	5.16503906	5.26269484
03/06/03	16:49:00	587.671143	256.127533	4.07851458	3.35083008	109.496567	64.6142502	0.09399503	63.4393311	33.5290527	13995.4824	14231.6885	0.29296178	-1.1718806	5.16503906	5.26269484
03/06/03	16:50:00	587.671143	256.127533	4.07851458	3.35083008	109.496567	63.2379112	0.09399503	62.532959	34.9725304	13995.4824	14231.6885	0.29296178	-1.1718806	5.16503906	5.26269484
03/06/03	16:51:00	587.671143	256.127533	4.07851458	3.35083008	109.496567	63.137207	0.09399503	63.5064659	33.4619141	13995.4824	14231.6885	0.29296178	-1.1718806	5.16503906	5.26269484
03/06/03	16:52:00	587.671143	256.127533	3.82808161	3.35083008	109.496567	61.7608643	0.09399503	64.2785645	33.4283447	13995.4824	14231.6885	0.29296178	-1.1718806	5.16503906	5.26269484
03/06/03	16:53:00	587.671143	256.127533	4.07933378	3.35083008	109.496567	58.4039307	0.09399503	58.336792	32.8912354	13995.4824	14231.6885	0.29296178	-1.1718806	5.16503906	5.26269484

DATE	TIME	MAII006C Generator Arm Current Phase C	RMTT500 Ambient Temp	ADFI001 Cond Xfer Flow Calculated	ADLT001 Condenser Hotwell Level	TSTMFLO Total Stm Flow	BAFI002 Total Air Flow	REAI001 CEMS CO2	BAAI052 Boiler CO	BATE055 SCR Outlet Temp.	BATI020 AH Air Outlet Temp.	AEFY136 Fisher FW Valve Demand		
		KA	DEG F	KPPH	IN	KPPH	KPPH	%	PPM	DEG F	DEG F	%		
03/06/03	16:17:00	5.47753906	87.2680664	137.64418	46.7138672	1361.43738	2240.93726	11.595458	0	627.918213	542.316833	0	40.7880325	172.485954	
03/06/03	16:18:00	5.47753906	87.2680664	136.038483	46.7138672	1361.43738	2240.93726	11.6625977	0	627.918213	542.316833	0	40.7906113	167.75267	
03/06/03	16:19:00	5.47753906	87.2680664	138.638306	46.7138672	1361.43738	2246.60522	11.6625977	0	627.918213	542.316833	0	39.7720222	172.083118	
03/06/03	16:20:00	5.47753906	87.2680664	137.344543	46.7138672	1361.43738	2246.60522	11.6625977	0	627.918213	542.316833	0	40.77742	157.816161	
03/06/03	16:21:00	5.47753906	87.2680664	127.492233	47.1972618	1361.43738	2281.67383	11.6625977	0	627.918213	542.316833	0	40.77742	171.848138	
03/06/03	16:22:00	5.47753906	87.2680664	127.384476	47.1972618	1361.43738	2246.87842	11.6625977	0	627.918213	542.316833	0	40.77742	160.770261	
03/06/03	16:23:00	5.47753906	87.2680664	137.64418	47.1972618	1361.43738	2244.20801	11.3818359	0	627.918213	542.316833	0	40.77742	173.76159	
03/06/03	16:24:00	5.47753906	87.2680664	133.181915	47.1972618	1361.43738	2282.89429	11.5893555	0	627.918213	542.316833	0	40.77742	167.920529	
03/06/03	16:25:00	5.47753906	87.2680664	136.139389	47.1972618	1361.43738	2248.25928	11.2902822	0	627.918213	542.316833	0	40.77742	175.17151	
03/06/03	16:26:00	5.47753906	87.2680664	135.329987	47.1972618	1361.43738	2244.31714	11.4916983	0	627.918213	542.316833	0	40.7668381	175.775758	
03/06/03	16:27:00	5.47753906	87.2680664	134.515732	47.1972618	1361.43738	2244.31714	11.2902822	0	627.918213	542.316833	0	40.7668381	168.121949	
03/06/03	16:28:00	5.47753906	87.2680664	136.642838	47.1972618	1361.43738	2290.00635	11.3879385	0	627.918213	542.316833	0	40.7668381	167.349847	
03/06/03	16:29:00	5.47753906	87.2680664	132.768829	47.1972618	1361.43738	2255.77637	11.5893555	0	627.918213	542.316833	0	40.7668381	167.416989	
03/06/03	16:30:00	5.47753906	87.2680664	132.354462	47.1972618	1361.43738	2255.77637	11.5893555	0	627.918213	542.316833	0	40.7668381	165.234982	
03/06/03	16:31:00	5.47753906	87.2680664	134.821655	46.7138672	1361.43738	2255.77637	11.5893555	0	627.918213	542.316833	0	40.7668381	159.091794	
03/06/03	16:32:00	5.47753906	87.2680664	135.634094	46.7138672	1361.43738	2255.77637	11.5893555	0	627.918213	542.316833	0	40.7668381	160.199582	
03/06/03	16:33:00	5.47753906	87.2680664	137.943176	46.7138672	1361.43738	2220.77051	11.6076651	0	627.918213	542.316833	0	40.7668381	162.885133	
03/06/03	16:34:00	5.47753906	87.2680664	134.311401	46.7138672	1361.43738	2260.77808	11.6076651	0	627.918213	542.316833	0	41.7907639	161.105946	
03/06/03	16:35:00	5.47753906	87.2680664	133.490906	46.7138672	1361.43738	2262.27002	11.6076651	0	627.918213	542.316833	0	41.7907639	157.547601	
03/06/03	16:36:00	5.47753906	87.2680664	135.836441	46.7138672	1361.43738	2262.27002	11.6076651	0	627.918213	542.316833	0	41.7907639	159.863877	
03/06/03	16:37:00	5.47753906	87.2680664	135.126892	46.7138672	1361.43738	2266.62256	11.4916983	0	627.918213	542.316833	0	40.7831039	161.878045	
03/06/03	16:38:00	5.47753906	87.2680664	137.04425	46.7138672	1361.43738	2232.03784	11.2902822	0	627.918213	542.316833	0	41.8582153	170.203248	
03/06/03	16:39:00	5.47753906	87.2680664	155.006775	46.7138672	1361.43738	2232.03784	11.583252	0	627.918213	542.316833	0	41.8582153	170.270375	
03/06/03	16:40:00	5.47753906	87.2680664	158.684143	46.7138672	1361.43738	2232.03784	11.2902822	0	627.918213	542.316833	0	40.8266182	168.256226	
03/06/03	16:41:00	5.47753906	87.2680664	154.474289	46.7138672	1361.43738	2232.03784	11.4916983	0	627.918213	542.316833	0	40.8266182	172.75451	
03/06/03	16:42:00	5.47753906	87.2680664	154.740753	46.7138672	1361.43738	2232.26611	11.4916983	0	627.918213	542.316833	0	40.8266182	174.6344	
03/06/03	16:43:00	5.47753906	87.2680664	153.224609	46.7138672	1361.43738	2232.26611	11.4916983	0	627.918213	542.316833	0	40.8266182	166.309205	
03/06/03	16:44:00	5.47753906	87.2680664	153.224609	46.7138672	1361.43738	2232.26611	11.4916983	0	627.918213	542.316833	0	41.8354301	178.327027	
03/06/03	16:45:00	5.47753906	87.2680664	157.03125	46.7138672	1361.43738	2232.26611	11.6931143	0	627.918213	542.316833	0	41.8354301	163.690797	
03/06/03	16:46:00	5.47753906	87.2680664	149.87175	46.7138672	1361.43738	2232.26611	11.4855957	0	627.918213	542.316833	0	41.821701	156.540521	
03/06/03	16:47:00	5.47753906	87.2680664	149.504807	46.7138672	1361.43738	2232.26611	11.595458	0	627.918213	542.316833	0	40.8037529	163.220815	
03/06/03	16:48:00	5.47753906	87.2680664	154.029129	46.7138672	1361.43738	2269.86646	11.595458	0	627.918213	542.316833	0	40.8037529	156.506959	
03/06/03	16:49:00	5.47753906	87.2680664	158.250854	46.7138672	1361.43738	2269.86646	11.595458	0	627.918213	542.316833	0	41.8945313	161.676629	
03/06/03	16:50:00	5.47753906	87.2680664	153.850708	46.7138672	1361.43738	2267.65112	11.595458	0	627.918213	542.316833	0	41.8945313	160.837396	
03/06/03	16:51:00	5.47753906	87.2680664	155.449112	46.7138672	1361.43738	2267.65112	11.595458	0	627.918213	542.316833	0	41.8945313	164.612226	Avg Feed, KP
03/06/03	16:52:00	5.47753906	87.2680664	151.693329	46.7138672	1361.43738	2232.89478	11.394042	0	627.918213	542.316833	0	41.8945313	164612.226	Avg lb/hr
03/06/03	16:53:00	5.47753906	87.2680664	156.856247	46.7138672	1361.43738	2269.83862	11.6931143	0	627.918213	542.316833	0	40.8920746	82.3061128	Avg TPH

DATE	TIME	MAJI007 Generator Megawatts MW	MAJI008 Generator Megavars MVAR	NAJT101 13.8 kv NAA01 Gen Aux Load MW	NAJT201 13.8 kv NAA02 Gen Aux Load MW	AEFI135 FW Flow Comp. KPPH	AEFI131 SH Spray Flow KPPH	FDFI002 Sootblower Steam Flow KPPH	FDFI022 SCR Sootblower Stm Flow KPPH	AAFY018A Cont. Blowdown Flow PCT	FBFI021 MS to Aux Stm. Flow KPPH	AETE137 Feedwater Temp. DEG F	AAPTOO6 Selected Drum Pressure PSIG	FDPT002 Sootblower Steam Pressure PSIG	FDTT002 Sootblower Steam Temp. DEG F	FDPT022 A.H. Sootblower Stm. Press PSIG	FDTT022 SCR/AH Sootblower Stm Temp DEG F	ABPIOO7 Turbine Throttle Pressure PSIG	ABTE008 Main Stm Temp DEG F	AEFI111 Reheater Spray Flow KPPH	ABPI010 Cold Reheat Stm Press PSIG	ABTE016 Cold Reheat Temp DEG F
03/07/03	10:00:00	221.06934	13.75730991	14.2895498	7.8808589	1361.57373	112.3504	0	1.9952712	0	0	363.7297	2495.9717	316.40622	639.70947	379.57761	803.58887	2401.245	979.8957	0	364.15921	564.3542
03/07/03	10:01:00	221.06934	13.75730991	14.2895498	7.8808589	1361.57373	116.2188	0	1.9952712	0	0	363.7297	2495.9717	316.40622	639.70947	379.57761	803.58887	2393.921	983.1403	0	364.15921	564.3542
03/07/03	10:02:00	221.06934	13.75730991	14.2895498	7.8808589	1361.312744	116.2188	0	1.9952712	0	0	363.7297	2495.9717	316.40622	639.70947	379.57761	803.58887	2397.583	983.1403	0	364.15921	564.3542
03/07/03	10:03:00	221.06934	13.75730991	14.2895498	7.8808589	1361.312744	116.2188	0	1.9952712	0	0	363.7297	2495.9717	316.40622	639.70947	379.57761	803.58887	2397.583	983.1403	0	364.15921	564.3542
03/07/03	10:04:00	221.06934	13.75730991	14.2895498	7.8808589	1331.12207	116.2188	0	1.9952712	0	0	363.7297	2495.9717	316.40622	639.70947	379.57761	803.58887	2397.583	983.1403	0	364.15921	564.3542
03/07/03	10:05:00	221.06934	13.75730991	14.2895498	7.8808589	1331.12207	116.2188	0	1.9952712	0	0	363.7297	2495.9717	316.40622	639.70947	379.57761	803.58887	2397.583	981.4508	0	364.15921	564.3542
03/07/03	10:06:00	221.06934	13.75730991	14.2895498	7.8808589	1361.363037	116.2188	0	1.9952712	0	0	363.7297	2495.9717	316.40622	639.70947	379.57761	803.58887	2397.583	981.4508	0	364.15921	564.3542
03/07/03	10:07:00	221.06934	13.75730991	14.2895498	7.8808589	1361.363037	116.2188	0	1.9952712	0	0	363.7297	2495.9717	316.40622	639.70947	379.57761	803.58887	2401.245	983.0283	0	364.15921	564.3542
03/07/03	10:08:00	221.06934	13.75730991	14.2895498	7.8808589	1330.894287	148.0793	0	1.9952712	0	0	363.7297	2495.9717	316.40622	639.70947	379.57761	803.58887	2404.907	984.6506	0	364.15921	564.3542
03/07/03	10:09:00	221.06934	13.75730991	14.2895498	7.8808589	1330.894287	127.6152	0	1.9952712	0	0	363.7297	2495.9717	316.40622	639.70947	379.57761	803.58887	2404.907	976.4495	0	364.15921	564.3542
03/07/03	10:10:00	221.06934	13.75730991	14.2895498	7.8808589	1330.894287	117.6589	0	1.9952712	0	0	363.7297	2495.9717	316.40622	639.70947	379.57761	803.58887	2404.907	969.9274	0	364.15921	564.3542
03/07/03	10:11:00	221.06934	13.75730991	14.2895498	7.8808589	1362.234497	117.6589	0	1.9952712	0	0	363.7297	2495.9717	316.40622	639.70947	379.57761	803.58887	2404.907	974.8273	0	364.15921	564.3542
03/07/03	10:12:00	221.06934	13.75730991	14.2895498	7.8808589	1362.234497	113.6545	0	1.9952712	0	0	363.7297	2495.9717	316.40622	639.70947	379.57761	803.58887	2401.245	978.0829	0	364.15921	564.3542
03/07/03	10:13:00	221.06934	20.8068676	14.2895498	7.8808589	1362.234497	117.6589	0	1.9952712	0	0	363.7297	2495.9717	316.40622	639.70947	379.57761	803.58887	2401.245	981.3387	0	364.15921	564.3542
03/07/03	10:14:00	221.06934	20.8068676	14.2895498	7.8808589	1362.234497	117.6589	0	1.9952712	0	0	363.7297	2495.9717	316.40622	639.70947	379.57761	803.58887	2401.245	981.3387	0	364.15921	564.3542
03/07/03	10:15:00	221.06934	20.8068676	14.2895498	7.8808589	1362.234497	117.6589	0	1.9952712	0	0	363.7297	2495.9717	316.40622	639.70947	379.57761	803.58887	2401.245	982.9723	0	364.15921	564.3542
03/07/03	10:16:00	221.06934	20.8068676	14.2895498	7.8808589	1362.234497	117.6589	0	1.9952712	0	0	363.7297	2495.9717	316.40622	639.70947	379.57761	803.58887	2397.583	982.9723	0	364.15921	564.3542
03/07/03	10:17:00	221.06934	20.8068676	14.2895498	7.8808589	1362.234497	144.0437	0	1.9952712	0	0	363.7297	2495.9717	316.40622	639.70947	379.57761	803.58887	2397.583	982.9723	0	364.15921	564.3542
03/07/03	10:18:00	221.06934	20.8068676	14.2895498	7.8808589	1330.932617	139.8917	0	1.9952712	0	0	363.7297	2495.9717	316.40622	639.70947	379.57761	803.58887	2397.583	979.6605	0	364.15921	564.3542
03/07/03	10:19:00	221.06934	20.8068676	14.2895498	7.8808589	1330.932617	123.4222	0	1.9952712	0	0	363.7297	2495.9717	316.40622	639.70947	379.57761	803.58887	2397.583	972.5712	0	364.15921	564.3542
03/07/03	10:20:00	221.06934	20.8068676	14.2895498	7.8808589	1367.000244	115.6741	0	1.9952712	0	0	363.7297	2495.9717	316.40622	639.70947	379.57761	803.58887	2393.921	977.4601	0	364.15921	564.3542
03/07/03	10:21:00	221.06934	20.8068676	14.2895498	7.8808589	1336.651611	119.7868	0	1.9952712	0	0	363.7297	2495.9717	316.40622	639.70947	379.57761	803.58887	2393.921	982.3383	0	364.15921	564.3542
03/07/03	10:22:00	221.06934	20.8068676	14.2895498	7.8808589	1336.651611	119.7868	0	1.9952712	0	0	363.7297	2495.9717	316.40622	639.70947	379.57761	803.58887	2393.921	982.3383	0	364.15921	564.3542
03/07/03	10:23:00	221.06934	20.8068676	14.2895498	7.8808589	1336.651611	148.3634	0	1.9952712	0	0	363.7297	2495.9717	316.40622	639.70947	379.57761	803.58887	2397.583	983.9605	0	364.15921	564.3542
03/07/03	10:24:00	221.06934	20.8068676	14.2895498	7.8808589	1336.651611	136.5409	0	1.9952712	0	0	363.7297	2495.9717	316.40622	639.70947	379.57761	803.58887	2397.583	977.404	0	364.15921	564.3542
03/07/03	10:25:00	221.06934	20.8068676	14.2895498	7.8808589	1306.515869	124.9479	0	1.9952712	0	0	363.7297	2495.9717	316.40622	639.70947	379.57761	803.58887	2401.245	972.5039	0	364.15921	564.3542
03/07/03	10:26:00	221.06934	20.8068676	14.2895498	7.8808589	1337.821289	121.1845	0	1.9952712	0	0	363.7297	2495.9717	316.40622	639.70947	379.57761	803.58887	2397.583	974.1149	0	364.15921	564.3542
03/07/03	10:27:00	221.06934	20.8068676	14.2895498	7.8808589	1337.821289	121.1845	0	1.9952712	0	0	363.7297	2495.9717	316.40622	639.70947	379.57761	803.58887	2401.245	979.0263	0	364.15921	564.3542
03/07/03	10:28:00	221.06934	20.8068676	14.2895498	7.8808589	1337.821289	121.1845	0	1.9952712	0	0	363.7297	2495.9717	316.40622	639.70947	379.57761	803.58887	2397.583	980.6486	0	364.15921	564.3542
03/07/03	10:29:00	221.06934	20.8068676	14.2895498	7.8808589	1337.821289	121.1845	0	1.9952712	0	0	363.7297	2495.9717	316.40622	639.70947	379.57761	803.58887	2401.245	982.2822	0	364.15921	564.3542
03/07/03	10:30:00	221.06934	20.8068676	14.2895498	7.8808589	1337.821289	121.1845	0	1.9952712	0	0	363.7297	2495.9717	316.40622	639.70947	379.57761	803.58887	2401.245	982.2822	0	364.15921	564.3542
03/07/03	10:31:00	221.06934	20.8068676	14.2895498	7.8808589	1337.821289	121.1845	0	1.9952712	0	0	363.7297	2495.9717	316.40622	639.70947	379.57761	803.58887	2401.245	982.2822	0	364.15921	564.3542
03/07/03	10:32:00	221.06934	20.8068676	14.2895498	7.8808589	1337.821289	124.9479	0	1.9952712	0	0	363.7297	2495.9717	316.40622	639.70947	379.57761	803.58887	2404.907	982.2822	0	364.15921	564.3542
03/07/03	10:33:00	221.06934	20.8068676	14.2895498	7.8808589	1337.821289	124.9479	0	1.9952712	0	0	363.7297	2495.9717	316.40622	639.70947	379.57761	803.58887	2404.907	982.2822	0	364.15921	564.3542
03/07/03	10:34:00	221.06934	20.8068676	14.2895498	7.8808589	1370.796509	120.8366	0	1.9952712	0	0	363.7297	2495.9717	316.40622	639.70947	379.57761	803.58887	2404.907	980.9064	0	364.15921	564.3542
03/07/03	10:35:00	221.06934	20.8068676	14.2895498	7.8808589	1370.796509	120.8366	0	1.9952712	0	0	363.7297	2495.9717	316.40622	639.70947	379.57761	803.58887	2401.245	979.3177	0	364.15921	564.3542
03/07/03	10:36:00	221.06934	20.8068676	14.2895498	7.8808589	1339.614258	124.9479	0	1.9952712	0	0	363.7297	2495.9717	316.40622	629.63867	379.57761	803.58887	2401.245	979.3177	0	364.15921	564.3542
03/07/03	10:37:00	221.06934	20.8068676	14.2895498	7.8808589	1372.607544	121.1845	0	1.9952712	0	0	363.7297	2495.9717	316.40622	629.63867	379.57761	803.58887	2401.245	979.3177	0	364.15921	564.3542
03/07/03	10:38:00	221.06934	20.8068676	14.2895498	7.8808589	1342.092773	124.9479	0	1.9952712	0	0	363.7297	2495.9717	316.40622	629.63867	379.57761	803.58887	2401.245	980.6419	0	364.15921	564.3542
03/07/03	10:39:00	221.06934	20.8068676	14.2895498	7.8808589	1342.092773	124.9479	0	1.9952712	0	0	363.7297	2495.9717	316.40622	629.63867	379.57761	803.58887	2404.907	980.6419	0	364.15921	564.3542
03/07/03	10:40:00	221.06934	20.8068676	14.2895498	7.8808589	1342.092773	124.9479	0	1.9952712	0	0	363.7297	2495.9717	316.40622	629.63867	379.57761	803.58887	2397.583	980.6419	0	364.15921	564.3542
03/07/03	10:41:00	221.06934	20.8068676	14.2895498	7.8808589	1342.092773	124.9479	0	1.9952712	0	0	363.7297	2495.9717	316.40622	629.63867	379.57761	803.58887	2397.583	979.0197	0	364.15921	564.3542
03/07/03	10:42:00	221.06934	20.8068676	14.2895498	7.8808589	1342.092773	124.9479	0	1.9952712	0	0	363.7297	2495.9717	316.40622	629.63867	379.57761	803.58887	2390.259	980.6531	0	364.15921	564.3542
03/07/03	10:43:00	221.06934	20.8068676	14.2895498	7.8808589	1342.092773	124.9479	0	1.9952712	0	0	363.7297	2495.9717	316.40622	629.63867	379.57761	803.58887	2390.259	983.8754	0	364.15921	564.3542
03/07/03	10:44:00	221.06934	20.8068676	14.2895498	7.8808589	1311.183594	159.1788	0	1.9952712	0	0	363.7297	2495.9717	316.40622	629.63867	379.57761	803.58887	2390.259	988.7764	0	364.15921	564.3542
03/07/03	10:45:00	221.06934	20.8068676	14.2895498	7.8808589	1311.183594	152.9742	0	1.9952712	0	0	363.7297	2495.9717	316.40622	629.63867	379.57761	803.58887	2390.259	980.5747	0	364.15921	564.3542
03/07/03	10:46:00	221.06934	20.8068676	14.2895498	7.8808589	1311.183594	128.2733	0	1.9952712	0	0	363.7297	2495.9717	316.40622	629.63867	379.57761	803.58887	2390.259	977.3079	0	364.15921	564.3542
03/07/03	10:47:00	221.06934	20.8068676	14.2895498	7.8808589	1311.183594	128.2733	0	1.9952712	0	0	363.7297	2495.9717	316.40622	629.63867	379.57761	803.58887	2390.259	983.8081	0	364.15921	564.3542
03/07/03	10:48:00	221.06934	20.8068676	14.2895498	7.8808589	1311.183594	159.311	0	1.9952712	0	0	363.7297	2495.9717	316.40622	629.63867	379.57761	803.58887	2393.921	988.6868	0	364.15921	564.3542
03/07/03	10:49:00	221.06934	20.8068676	14.2895498	7.8808589	1311.183594	150.4767	0	1.9952712	0	0	363.7297	2495.9717	316.40622	629.63867	379.57761	803.58887	2390.259	980.4738	0	364.15921	564.3542
03/07/03	10:50:00	221.06934	20.8068676	14.2895498	7.8808589	1311.183594	134.6781	0	1.9952712	0	0	363.7297	2495.9717	316.40622	629.63867	379.57761	803.58887	2397.583	973.929	0	364.15921	564.3542
03/07/03	10:51:00	221.06934	20.8068676	14.2895498	7.8808589	1311.183594	134.6781	0	1.9952712	0	0	363.7297	2495.9717	316.40622	629.63867	379.57761	803.58887	2401.245	982.0737	0	364.15921	564.3542
03/07/03	10:52:00	221.06934	20.8068676	14.2895498	7.8808589	1311.183594	159.1788	0	1.9952712	0	0	363.7297	2495.9717	316.40622	629.63867	379.57761	803.58887	2401.245	988.5635	0	364.15921	564.3542
03/07/03	10:53:00	221.06934	20.8068676	14.2895498	7.8808589	1311.183594	159.1788	0	1.9952712	0	0	363.7297	2495.9717	316.40622	629.63867	379.57761	803.58887	2404.907	981.462	0	364.15921	564.3542
03/07/03	10:54:00	221.06934	20.8068676	14.2895498	7.8808589	1311.183594	133.2638	0	1.9952712	0	0	363.7297	2495.9717	316.40622	629.63867	379.57761	803.58887	2404.907	973.2612	0	364.15921	564.3542
03/07/03	10:55:00	221.06934	20.8068676	14.2895498	7.8808589	1311.183594	133.2638	0	1.9952712	0	0	363.7297	2495.9717	316.40622	629.63867	379.57761	803.58887	2408.569	978.139	0	364.15921	564.3542
03/07/03	10:56:00	221.06934	20.8068676	14.2895498	7.8808589	1342.258423	129.417	0	1.9952712	0	0	363.7297	2495.9717	316.40622	629.63867	379.57761	803.58887	2408.569	984.6507	0	364.15921	564.3542
03/07/03	10:57:00	221.06934	20.8068676	14.2895498	7.8808589	1312.230713	161.0196	0	1.9952712	0	0	363.7297	2495.9717	316.40622	629.63867	379.57761	803.58887	2412.231	986.2956	0	364.15921	564.3542
03/07/03	10:58:00	221.06934	20.8068676	14.2895498	7.8808589	1312.230713	137.4629	0	1.9952712	0	0	363.7297	2482.0859	316.40622	629.63867	379.57761	803.58887	2404.907	974.8162	0	364.15921	564.3542
03/07/03	10:59:00	221.06934	20.8068676	14.2895498	7.8808589	1312.230713	132.3126	0	1.9952712	0	0	363.7297	2482.0859	316.40622	629.63867	379.57761	803.58887	2408.569	971.5383	0	364.15921	564.3542
02/07/03	11:00:00	221.06934	20.8068676	14.2895498	7.8808589	1312.230713	132.3126	0	1.9952712	0	0	363.7297	2482.0859	316.40622	629.63867	379.57761	803.58887	2404.907	974.7937	0	364.15921	564.3542
03/07/03	11:01:00	221.06934	20.8068676	14.2895498	7.8808589	1344.290894	124.2721	0	1.9952712	0	0	363.7297	2482.0859	316.40622	629.63867	379.57761	803.58887	2401.245	980.2272	0	364.15921	564.3542
03/07/03	11:02:00	221.06934	20.8068676	14.2895498	7.8808589	1343.439819	128.7647	0	1.9952712	0	0	363.7297	2482.0859	316.40622	629.63867	379.57761	803.58887	2397.583	981.8384	0	364.15921	564.3542
03/07/03	11:03:00	221.06934	20.8068676	14.2895498	7.8808589	1343.439819	153.7977	0	1.9952712	0	0	363.7297	2482.0859	316.40622	629.63867	379.57761	803.58887	2397.583	985.0833	0	364.15921	564.3542
03/07/03	11:04:00	221.06934	20.8068676	14.2895498	7.8808589	1343.439819	153.9345	0	1.9952712	0	0	363.7297	2482.0859	316.40622	629.63867	379.57761	803.58887	2397.583	981.7936	0	364.15921	564.3542
03/07/03	11:05:00	221.06934	20.8068676	14.2895498	7.8808589	1343.439819	129.0913	0	1.9952712	0	0	363.7297	2482.0859	316.40622	629.63867	379.57761	803.58887	2393.921	973.6152	0	364.15921	564.3542
03/07/03	11:06:00	221.06934	20.8068676	14.2895498	7.8808589	1343.439819	129.0913	0	1.9952712	0	0	363.7297	2482.0859	316.40622	629.63867	379.57761	803.58887	2393.921	980.1152	0	364.15921	564.3542
03/07/03	11:07:00	221.06934	20.8068676	14.2895498	7.8808589	1343.439819	129.0913	0	1.9952712	0	0	363.7297	2482.0859	316.40622	629.63867	379.57761	803.58887	2393.921	985.0048	0	364.15921	564.3542
03/07/03	11:08:00	221.06934	20.8068676	14.2895498	7.8808589	1343.439819	157.1824	0	1.9952712	0	0	363.7297	2482.0859	316.40622	629.63867	379.57761	803.58887	2397.583	984.9824	0	364.15921	564.3542

DATE	TIME	ABPT024 Hot Reheat Pressure PSIG	ABTE022 Hot Reheat Temp DEG F	AETE119 BFP Hdr Discharge Temp DEG F	AETE130 FW Htr #7 Outlet Temp DEG F	AETE035 FW Htr #7 Casc Drain Temp DEG F	AFPT026 Cold Reheat Ext Hdr Press PSIG	AFTE027 Cold Reheat Ext Hdr Temp DEG F	AFTI017 HP Aux Steam Temp DEG F	AFFI017 Spray Flow to HP Aux Steam KPPH	AETE055 BFBP Discharge Hdr Temp DEG F	AFPY044A DA Pegging Stm Valve PCT	ASFI006 Caulkins LP Stm Flow Output KPPH	ASFI016 Caulkins HP Stm Flow Output KPPH	MAJI002 Unit Megavars MVAR	MAJI004 Unit Megawatts MW	ADPT003C Absolute Cond Vac Calculated IN HGA	DALT004A Cooling Twr Basin Level IN	DAFI027 Cooling Twr Blow-Down Flow GPM	EAFI034 Cooling Twr Blow-Down SDA GPM	DATE014A Water Box Inlet A Temp DEG F	DATE014B Water Box Inlet B Temp DEG F	DATE016A Water Box Outlet A Temp DEG F
03/07/03	10:00:00	335.9375	927.64	365.0928	360.9864	281.19495	37.170406	281.43625	387.3723	0	253.9884	0	77.7043991	17.0551643	5.00487566	222.29004	1.9128418	57.231445	0	badbad	82.362457	82.391792	96.285774
03/07/03	10:01:00	335.9375	927.64	365.0928	360.9864	281.19495	37.170406	281.43625	387.3723	0	253.9884	0	77.7043991	17.0551643	5.00487566	222.29004	1.9128418	57.231445	0	badbad	83.759377	82.391792	96.285774
03/07/03	10:02:00	335.9375	927.64	365.0928	360.9864	281.19495	37.170406	281.43625	387.3723	0	253.9884	0	77.7043991	16.8900337	5.00487566	222.29004	1.9128418	57.231445	0	badbad	83.759377	82.391792	96.285774
03/07/03	10:03:00	335.9375	927.64	365.0928	360.9864	281.19495	37.170406	281.43625	387.3723	0	253.9884	0	75.6567688	16.8900337	5.00487566	222.29004	1.9128418	57.231445	0	badbad	83.744751	82.318428	96.285774
03/07/03	10:04:00	335.9375	927.64	365.0928	360.9864	281.19495	37.170406	281.43625	387.3723	0	253.9884	0	75.6567688	17.0836487	5.00487566	222.29004	1.9128418	57.231445	0	badbad	83.730072	82.318367	96.285774
03/07/03	10:05:00	335.9375	927.64	365.0928	360.9864	281.19495	37.170406	281.43625	387.3723	0	253.9884	0	80.9331131	16.8760529	5.00487566	222.29004	1.9128418	57.231445	0	badbad	83.730072	82.318367	96.285774
03/07/03	10:06:00	335.9375	926.4396	365.0928	360.9864	281.19495	37.170406	281.43625	387.3723	0	253.9884	0	83.1156082	16.8760529	5.00487566	222.29004	1.9128418	57.231445	0	badbad	83.700706	82.274338	96.285774
03/07/03	10:07:00	335.9375	928.0499	365.0928	360.9864	281.19495	37.170406	281.43625	387.3723	0	253.9884	0	75.5008698	16.9744492	5.00487566	222.29004	1.9128418	57.231445	0	badbad	82.274338	82.274338	96.285774
03/07/03	10:08:00	335.9375	928.0499	365.0928	360.9864	281.19495	37.170406	281.43625	387.3723	0	253.9884	0	75.5008698	17.2154236	5.00487566	222.29004	1.9128418	57.231445	0	badbad	83.700706	82.259644	96.285774
03/07/03	10:09:00	335.9375	928.0499	365.0928	360.9864	281.19495	37.170406	281.43625	387.3723	0	253.9884	0	80.0838089	17.2154236	5.00487566	222.29004	1.9128418	57.231445	0	badbad	82.259644	82.259644	96.285774
03/07/03	10:10:00	335.9375	926.3835	365.0928	360.9864	281.19495	37.170406	281.43625	387.3723	0	253.9884	0	80.0838089	17.2154236	5.00487566	222.29004	1.9128418	57.231445	0	badbad	82.230301	82.230301	96.285774
03/07/03	10:11:00	335.9375	926.3835	365.0928	360.9864	281.19495	37.170406	281.43625	387.3723	0	253.9884	0	80.0838089	17.2154236	5.00487566	222.29004	1.9128418	57.231445	0	badbad	82.200958	82.215607	96.285774
03/07/03	10:12:00	335.9375	926.3835	365.0928	360.9864	281.19495	37.170406	281.43625	387.3723	0	253.9884	0	78.0784607	17.2154236	5.00487566	222.29004	1.9128418	57.231445	0	badbad	82.200958	82.200958	96.285774
03/07/03	10:13:00	335.9375	926.3835	365.0928	360.9864	281.19495	37.170406	281.43625	387.3723	0	253.9884	0	78.0784607	17.0880947	5.00487566	222.29004	1.9128418	57.231445	0	badbad	83.612724	82.186264	96.285774
03/07/03	10:14:00	335.9375	927.994	365.0928	360.9864	281.19495	37.170406	281.43625	387.3723	0	253.9884	0	78.0784607	16.8737144	5.00487566	222.29004	1.9128418	57.231445	0	badbad	83.612724	82.186264	96.285774
03/07/03	10:15:00	335.9375	927.994	365.0928	360.9864	281.19495	37.170406	281.43625	387.3723	0	253.9884	0	78.5630951	16.8047943	5.00487566	222.29004	1.9128418	57.231445	0	badbad	83.583405	82.171555	96.285774
03/07/03	10:16:00	335.9375	927.994	365.0928	360.9864	281.19495	37.170406	281.43625	387.3723	0	253.9884	0	76.2944946	16.8344269	5.00487566	222.29004	1.9128418	57.231445	0	badbad	83.59803	82.171555	96.285774
03/07/03	10:17:00	335.9375	927.994	365.0928	360.9864	281.19495	37.170406	281.43625	387.3723	0	253.9884	0	82.5545731	16.905159	5.00487566	222.29004	1.9128418	57.231445	0	badbad	83.59803	83.583405	96.285774
03/07/03	10:18:00	335.9375	927.994	365.0928	360.9864	281.19495	37.170406	281.43625	387.3723	0	253.9884	0	82.5545731	16.971714	5.00487566	222.29004	1.9128418	57.231445	0	badbad	83.59803	83.554085	96.285774
03/07/03	10:19:00	335.9375	927.994	365.0928	360.9864	281.19495	37.170406	281.43625	387.3723	0	253.9884	0	73.9937363	17.0559635	5.00487566	222.29004	1.9128418	57.231445	0	badbad	83.554085	82.127563	96.285774
03/07/03	10:20:00	335.9375	927.994	365.0928	360.9864	281.19495	37.170406	281.43625	387.3723	0	253.9884	0	73.9937363	16.8735428	5.00487566	222.29004	1.9128418	57.231445	0	badbad	83.554085	82.127563	96.285774
03/07/03	10:21:00	335.9375	927.994	365.0928	360.9864	281.19495	37.170406	281.43625	387.3723	0	253.9884	0	78.6340561	16.5945587	5.00487566	222.29004	1.9128418	57.231445	0	badbad	83.554085	82.127563	96.285774
03/07/03	10:22:00	335.9375	927.994	365.0928	360.9864	281.19495	37.170406	281.43625	387.3723	0	253.9884	0	78.6340561	17.0511456	5.00487566	222.29004	1.9128418	57.231445	0	badbad	83.554085	82.098228	96.285774
03/07/03	10:23:00	335.9375	929.5258	365.0928	360.9864	281.19495	37.170406	281.43625	387.3723	0	253.9884	0	78.6340561	16.9993401	5.00487566	222.29004	1.9128418	57.231445	0	badbad	83.554085	83.510139	96.285774
03/07/03	10:24:00	335.9375	929.5258	365.0928	360.9864	281.19495	37.170406	281.43625	387.3723	0	253.9884	0	76.6114731	17.0047646	5.00487566	222.29004	1.9128418	57.231445	0	badbad	83.510139	82.08358	96.285774
03/07/03	10:25:00	335.9375	929.5258	365.0928	360.9864	281.19495	37.170406	281.43625	387.3723	0	253.9884	0	74.5279007	17.0593739	5.00487566	222.29004	1.9128418	57.231445	0	badbad	83.524834	82.098282	96.285774
03/07/03	10:26:00	335.9375	929.5258	365.0928	360.9864	281.19495	37.170406	281.43625	387.3723	0	253.9884	0	74.5279007	17.2052479	5.00487566	222.29004	1.9128418	57.231445	0	badbad	83.524834	83.510139	96.285362
03/07/03	10:27:00	335.9375	929.5258	365.0928	360.9864	281.19495	37.170406	281.43625	387.3723	0	253.9884	0	74.5279007	17.2052479	5.00487566	222.29004	1.9128418	57.231445	0	badbad	83.524834	82.068871	96.285362
03/07/03	10:28:00	335.9375	927.8484	365.0928	360.9864	281.19495	37.170406	281.43625	387.3723	0	253.9884	0	80.968544	17.0306988	5.00487566	222.29004	1.9128418	57.231445	0	badbad	83.524834	82.054176	96.256218
03/07/03	10:29:00	335.9375	927.8484	365.0928	360.9864	281.19495	37.170406	283.47711	387.3723	0	253.9884	0	83.0574951	17.5968552	5.00487566	222.29004	1.9128418	57.231445	0	badbad	83.524834	82.024818	96.22718
03/07/03	10:30:00	335.9375	927.8484	365.0928	360.9864	281.19495	37.170406	283.47711	387.3723	0	253.9884	0	75.1120529	16.9828873	5.00487566	222.29004	1.9128418	57.231445	0	badbad	83.524834	82.024818	96.22718
03/07/03	10:31:00	335.9375	927.8484	365.0928	360.9864	281.19495	37.170406	283.47711	387.3723	0	253.9884	0	75.1120529	17.2072048	5.00487566	222.29004	1.9128418	57.231445	0	badbad	82.068985	82.039581	96.22718
03/07/03	10:32:00	335.9375	927.8484	365.0928	360.9864	281.19495	37.170406	283.47711	387.3723	0	253.9884	0	75.1120529	16.84762	5.00487566	222.29004	1.9128418	57.231445	0	badbad	83.524933	83.583679	96.22718
03/07/03	10:33:00	335.9375	927.8484	365.0928	360.9864	281.19495	37.170406	283.47711	387.3723	0	253.9884	0	77.1692734	16.84762	5.00487566	222.29004	1.9128418	57.231445	0	badbad	82.3041	82.260071	96.22718
03/07/03	10:34:00	335.9375	926.4846	365.0928	360.9864	281.19495	37.170406	283.47711	387.3723	0	253.9884	0	79.2784348	16.6999874	5.00487566	222.29004	1.9128418	57.231445	0	badbad	82.3041	82.260071	96.22718
03/07/03	10:35:00	335.9375	926.4846	365.0928	360.9864	281.19495	37.170406	283.47711	387.3723	0	253.9884	0	79.2784348	16.6999874	5.00487566	222.29004	1.9128418	57.231445	0	badbad	82.3041	82.450974	96.22718
03/07/03	10:36:00	335.9375	926.4846	365.0928	360.9864	281.19495	37.170406	283.47711	387.3723	0	253.9884	0	75.033226	16.681797	5.00487566	222.29004	1.9128418	57.231445	0	325.41293	81.92823	82.612411	96.22718
03/07/03	10:37:00	335.9375	926.4846	365.0928	360.9864	281.19495	37.170406	283.47711	387.3723	0	253.9884	0	75.033226	16.681797	5.00487566	222.29004	1.9128418	57.231445	0	312.28766	83.428246	82.612411	96.22718
03/07/03	10:38:00	335.9375	926.4846	365.0928	360.9864	281.19495	37.170406	283.47711	387.3723	0	253.9884	0	75.033226	16.3589687	5.00487566	222.29004	1.9128418	57.231445	0	299.05621	82.030922	82.612411	96.22718
03/07/03	10:39:00	335.9375	926.4846	365.0928	360.9864	281.19495	37.170406	283.47711	387.3723	0	253.9884	0	75.033226	16.3589687	5.00487566	222.29004	1.9128418	57.231445	0	278.9838	82.016212	82.612411	96.22718
03/07/03	10:40:00	335.9375	927.8641	365.0928	360.9864	281.19495	37.170406	283.47711	387.3723	0	253.9884	0	75.033226	16.4164486	5.00487566	222.29004	1.9128418	57.231445	0	265.85846	83.413513	82.612411	96.22718
03/07/03	10:41:00	335.9375	926.2313	365.0928	360.9864	281.19495	37.170406	283.47711	387.3723	0	253.9884	0	79.2677383	16.5821419	5.00487566	222.29004	1.9128418	57.231445	0	249.16829	81.957451	82.656296	96.22718
03/07/03	10:42:00	335.9375	926.2313	365.0928	360.9864	281.19495	37.170406	283.47711	387.3723	0	253.9884	0	79.2677383	16.0341797	5.00487566	222.29004	1.9128418	57.231445	0	245.93622	81.913391	82.656296	96.22718
03/07/03	10:43:00	335.9375	926.2313	365.0928	360.9864	281.19495	37.170406	283.47711	387.3723	0	254.8895	0	74.9108734	15.9952316	5.00487566	222.29004	1.9128418	57.231445	0	249.23125	81.898666	82.656296	96.22718
03/07/03	10:44:00	335.9375	929.4295	365.0928	360.9864	281.19495	37.170406	283.47711	387.3723	0	254.8895	0	74.9108734	16.1718845	5.00487566	222.29004	1.9128418	57.231445	0	259.04553	81.854607	82.656296	96.22718
03/07/03	10:45:00	335.9375	931.051	365.0928	360.9864	281.19495	37.170406	283.47711	387.3723	0	254.8895	0	74.9108734	16.5781994	5.00487566	222.29004	1.9128418	57.231445	0	265.50424	83.251991	82.656296	96.22718
03/07/03	10:46:00	335.9375	931.051	365.0928	360.9864	281.19495	37.170406	283.47711	387.3723	0	254.8895	0	74.9108734	16.1259041	5.00487566	222.29004	1.9128418	57.231445	0	265.50424	83.237328	82.656296	96.22718
03/07/03	10:47:00	335.9375	934.2715	365.0928	360.9864	281.19495	37.170406	283.47711	387.3723	0	254.8895	0	74.9108734	16.1259041	5.00487566	222.29004	1.9128418	57.231445	0	265.50424	81.795792	82.524086	96.22718
03/07/03	10:48:00	335.9375	934.2715	365.0928	360.9864	281.19495	37.170406	283.47711	387.3723	0	254.8895	0	80.5452423	15.8148832	5.00487566	222.29004	1.9128418	57.231445	0	268.73355	83.207962	82.524086	96.22718
03/07/03	10:49:00	335.9375	934.2715	365.0928	360.9864	281.19495	37.170406	283.47711	387.3723	0	254.8895	0	80.9648209	15.8148832	5.00487566	222.29004	1.9128418	57.231445	0	272.03967	81.781059	82.524086	96.22718
03/07/03	10:50:00	335.9375	934.2715	365.0928	360.9864	281.19495	37.170406	283.47711	387.3723	0	254.8895	0	73.8104935	15.9635086	5.00487566	222.29004	1.9128418	57.231445	0	275.24896	83.193237	82.524086	96.22718
03/07/03	10:51:00	335.9375	934.2715	365.0928	360.9864	281.19495	37.170406	283.47711	387.3723	0	254.8895	0	73.8104935	16.0434856	5.00487566	222.29004	1.9128418	57.231445	0	278.47745	83.178558	82.524086	96.22718
03/07/03	10:52:00	335.9375	933.0487	365.0928	360.9864	281.19495	37.170406	283.47711	387.3723	0	254.8895	0	73.8104935	15.9675102	5.00487566	222.29004	1.9128418	57.231445	0	281.78015	83.1492	82.524086	96.22718
03/07/03	10:53:00	335.9375	933.0487	365.0928	360.9864	281.19495	37.170406	283.47711	387.3723	0	254.8895	0	81.6432343	15.9675102	5.00487566	222.29004	1.9128418	57.231445	0	285.04443	83.1492	82.524086	96.22718
03/07/03	10:54:00	335.9375	931.3824	365.0928	360.9864	281.19495	37.170406	283.47711	387.3723	0	254.8895	0	82.7081451	15.9675102	5.00487566	222.29004	1.9128418	57.231445	0	291.62433	83.1492	81.678177	96.22718
03/07/03	10:55:00	335.9375	929.7162	365.0928	360.9864	281.19495	37.170406	283.47711	387.3723	0	254.8895	0	76.9333954	16.4309139	5.00487566	222.29004	1.9128418	57.231445	0	298.0585	83.1492	83.090462	96.22718
03/07/03	10:56:00	335.9375	928.0611	365.0928	360.9864	281.19495	37.170406	283.47711	387.3723	0	254.8895	0	76.9333954	15.9088755	5.00487566	222.29004	1.9128418	57.231445	0	298.0585	83.1492	83.061134	96.22718
03/07/03	10:57:00	335.9375	928.0611	365.0928	360.9864	281.19495	37.170406	283.47711	387.3723	0	254.8895	0	74.9275208	15.9088755	5.00487566	222.29004	1.9128418	57.231445	0	288.27164	83.1492	83.061134	96.22718
03/07/03	10:58:00	335.9375	926.3835	365.0928	360.9864	281.19495	37.170406	283.47711	387.3723	0	254.8895	0	74.9275208	15.9088755	5.00487566	222.29004	1.9128418	57.231445	0	278.3085	83.1492	83.061134	96.22718
03/07/03	10:59:00	335.9375	924.7397	365.0928	360.9864	281.19495	37.170406	283.47711	387.3723	0	254.8895	0	74.9275208	15.9644356	5.00487566	222.29004	1.9128418	57.231445	0	268.32471	83.1492	81.575317	96.22718
03/07/03	11:00:00	335.9375	923.0847	365.0928	360.9864	281.19495	37.170406	283.47711	387.3723	0	254.8895	0	76.9702988	15.9616337	5.00487566	222.29004	1.9128418	57.231445	0	255.26364	83.1492	82.987701	96.22718
03/07/03	11:01:00	335.9375	923.0847	365.0928	360.9864	281.19495	37.170406	283.47711	387.3723	0	254.8895	0	83.1869507	15.9616337	5.00487566	222.29004	1.9128418	57.231445	0	245.42535	83.1492	82.973061	96.22718
03/07/03	11:02:00	335.9375	923.0847	365.0928	360.9864	281.19495	37.170406	283.47711	387.3723	0	254.8895	0	82.2066193	15.5123529	5.00487566	222.29004	1.9128418	57.231445	0	245.42535	83.1492	82.958382	96.22718
03/07/03	11:03:00	335.9375	924.6725	365.0928	360.9864	281.19495	37.170406	283.47711	387.3723	0	254.8895	0	76.6843643	15.9743452	5.00487566	222.29004	1.9128418	57.231445	0	248.72717	83.1492	82.973015	96.22718
03/07/03	11:04:00	335.9375	926.2715	365.0928	360.9864	281.19495	37.170406	283.47711	387.3723	0	254.8895	0	76.6843643	15.9743452	5.00487566	222.29004	1.9128418	57.231445	0	255.26364	83.1492	82.943687	96.22718
03/07/03	11:05:00	335.9375	926.2715	365.0928	360.9864	281.19495	37.170406	283.47711	387.3723	0	254.8895	0	78.8883743	15.701519	5.00487566	222.29004	1.9128418	57.231445	0	261.81604	83.1492	81.487198	96.22718
03/07/03	11:06:00	335.9375	927.8707	365.0928	360.9864	281.19495	37.170406	283.47711	387.3723	0	254.8895	0	78.8883743	15.701519	5.00487566	222.29004	1.9128418	57.231445	0	261.81604	82.186264	82.91436	96.22718
03/07/03	11:07:00	335.9375	927.8707	365.0928	360.9864	281.19495	37.170406	283.47711	387.3723	0	254.8895	0	78.8883743	15.7420845	5.00487566	222.29004	1.9128418	57.231445	0	258.56067	83.612724	82.899673	96.22718
03/07/03	11:08:00	335.9375	929.4585	365.0928	360.9864	281.19495	37.170406	283.47711	387.3723	0	254.8895	0	78.8883743	15.7420845	5.00487566	222.29004	1.9128418	57.231445	0	255.32509	82.156014	82.885033	96.22718

DATE	TIME	DATE016B Water Box Outlet B Temp DEG F	ABFI018 Main Steam Flow KPPH	MBEL100 Excitation Losses KW	BATI013 AH Gas Outlet Temp DEG F	BAAI046 Excess Oxygen PCT	RMAT500 Relative Humidity PCT	BATI011 AH Air Inlet Temp DEG F	JCFT152 Coal Fdr A Flow Rate KPPH	JCFT252 Coal Fdr B Flow Rate KPPH	JCFT352 Coal Fdr C Flow Rate KPPH	JCFT452 Coal Fdr D Flow Rate KPPH	NAET102 13.8 Kv NAA01 Aux Scr Volts VOLTS	NAET202 13.8 Kv NAAO2 Aux Scr Volts VOLTS	NAIT101 13.8 Kv NAAO1 Aux Scr Current AMPS	NAIT201 13.8 Kv NAA02 Aux Scr Current AMPS	MAII006A Generator Arm Current Phase A KA	MAII006B Generator Arm Current Phase B KA	MAII006C Generator Arm Current Phase C KA	RMTT500 Ambient Temp DEG F	ADFI001 Cond Xfer Flow Calculated KPPH	ADLT001 Condenser Hotwell Level IN	TSTMFLO Total Stm Flow KPPH
03/07/03	10:00:00	96.663246	1397.297	599.963562	256.0473	3.838426	76.654045	102.3473	57.79968	0.0604249	57.76611	31.27991	14022.948	14253.6621	0.29296178	-0.8056613	5.33105421	5.29687452	5.47753906	81.16455	118.4464	47.182617	1407.12
03/07/03	10:01:00	96.663246	1397.297	599.963562	256.0473	4.101247	76.654045	102.3473	64.8828	0.0604249	64.47998	30.27282	14022.948	14253.6621	0.29296178	-0.8056613	5.33105421	5.29687452	5.47753906	81.16455	119.0247	47.182617	1407.12
03/07/03	10:02:00	96.663246	1397.297	599.963562	256.0473	3.838203	75.585938	102.3473	61.66016	0.0604249	62.33154	30.27282	14022.948	14253.6621	0.29296178	-0.8056613	5.33105421	5.29687452	5.47753906	81.16455	117.632	47.182617	1407.12
03/07/03	10:03:00	96.663246	1397.297	599.963562	256.0473	4.100032	75.585938	102.3473	60.92163	0.0604249	59.84741	30.60852	14022.948	14253.6621	0.29296178	-0.8056613	5.33105421	5.29687452	5.47753906	81.16455	117.5152	47.182617	1407.12
03/07/03	10:04:00	97.209633	1397.297	599.963562	256.0473	3.840251	75.585938	102.3473	61.55944	0.0604249	61.3916	31.1206	14022.948	14253.6621	0.29296178	-0.8056613	5.33105421	5.29687452	5.47753906	81.16455	118.678	47.182617	1407.12
03/07/03	10:05:00	97.209633	1397.297	599.963562	256.0473	3.840251	75.585938	102.3473	61.32446	0.0604249	62.49939	31.1792	14022.948	14253.6621	0.29296178	-0.8056613	5.33105421	5.29687452	5.47753906	81.16455	128.7783	47.182617	1407.12
03/07/03	10:06:00	97.209633	1397.297	599.963562	256.0473	3.840251	75.585938	102.3473	61.3916	0.0604249	61.0559	31.1792	14022.948	14253.6621	0.29296178	-0.8056613	5.33105421	5.29687452	5.47753906	81.16455	135.7353	47.182617	1407.12
03/07/03	10:07:00	97.209633	1397.297	599.963562	256.0473	3.840251	75.585938	102.3473	57.19543	0.0604249	56.82617	30.60852	14022.948	14253.6621	0.29296178	-0.8056613	5.33105421	5.29687452	5.47753906	81.16455	122.4371	47.182617	1407.12
03/07/03	10:08:00	97.209633	1397.297	599.963562	256.0473	3.840251	74.578857	102.3473	55.047	0.0604249	54.94629	30.9778	14022.948	14253.6621	0.29296178	-0.8056613	5.33105421	5.29687452	5.47753906	81.16455	119.9441	47.182617	1407.12
03/07/03	10:09:00	97.209633	1397.297	599.963562	256.0473	4.091337	74.578857	102.3473	57.96753	0.0604249	57.76611	30.7428	14022.948	14253.6621	0.29296178	-0.8056613	5.33105421	5.29687452	5.47753906	81.16455	127.9224	47.182617	1407.12
03/07/03	10:10:00	97.209633	1397.297	599.963562	256.0473	4.091337	74.578857	102.3473	56.89331	0.0604249	56.99402	29.13147	14022.948	14253.6621	0.29296178	-0.8056613	5.33105421	5.29687452	5.47753906	81.16455	126.3018	47.182617	1407.12
03/07/03	10:11:00	97.209633	1397.297	599.963562	256.0473	3.828721	73.510742	102.3473	57.43042	0.0604249	55.38269	30.91064	14022.948	14253.6621	0.29296178	-0.8056613	5.33105421	5.29687452	5.47753906	81.16455	113.23	47.182617	1407.12
03/07/03	10:12:00	97.209633	1397.297	599.963562	256.0473	4.079486	73.510742	102.3473	58.8739	0.0604249	58.80676	31.27991	14022.948	14253.6621	0.29296178	-0.8056613	5.33105421	5.29687452	5.47753906	81.16455	109.9066	47.182617	1407.12
03/07/03	10:13:00	97.209633	1397.297	599.963562	256.0473	3.825233	72.503662	102.3473	61.62658	0.0604249	61.86157	30.5078	14022.948	14253.6621	0.29296178	-0.8056613	5.33105421	5.29687452	5.47753906	81.16455	115.2734	47.666012	1407.12
03/07/03	10:14:00	97.209633	1397.297	599.963562	256.0473	3.825233	74.853508	102.3473	59.54529	0.0604249	59.27673	34.5697	14022.948	14253.6621	0.29296178	-0.8056613	5.33105421	5.29687452	5.47753906	81.16455	113.8349	47.666012	1407.12
03/07/03	10:15:00	97.209633	1397.297	599.963562	256.0473	3.573918	74.853508	102.3473	58.37036	0.0604249	58.08624	30.77636	14022.948	14253.6621	0.29296178	-0.8056613	5.33105421	5.29687452	5.47753906	81.16455	98.15868	47.666012	1407.12
03/07/03	10:16:00	97.209633	1397.297	599.963562	256.0473	3.829926	74.853508	102.3473	61.92871	0.0604249	62.49939	30.33996	14022.948	14253.6621	0.29296178	-0.8056613	5.33105421	5.29687452	5.47753906	81.16455	90.13539	47.666012	1407.12
03/07/03	10:17:00	97.209633	1397.297	599.963562	256.0473	3.829926	76.867676	102.3473	62.06299	0.0604249	63.27148	30.7428	14022.948	14253.6621	0.29296178	-0.8056613	5.33105421	5.29687452	5.47753906	81.16455	97.59686	47.666012	1407.12
03/07/03	10:18:00	97.209633	1397.297	599.963562	256.0473	3.829926	75.860596	102.3473	64.04357	0.0604249	63.54004	28.15796	14022.948	14253.6621	0.29296178	-0.8056613	5.33105421	5.29687452	5.47753906	81.16455	94.4505	47.666012	1407.12
03/07/03	10:19:00	97.209633	1397.297	599.963562	256.0473	3.568967	76.867676	102.3473	60.45166	0.0604249	60.82092	30.4071	14022.948	14253.6621	0.29296178	-0.8056613	5.33105421	5.29687452	5.47753906	81.16455	91.34613	48.149414	1407.12
03/07/03	10:20:00	97.209633	1397.297	599.963562	256.0473	3.819114	74.54834	102.3473	66.62842	0.0604249	64.98352	31.21277	14022.948	14253.6621	0.29296178	-0.8056613	5.33105421	5.29687452	5.47753906	81.16455	90.89399	48.149414	1407.12
03/07/03	10:21:00	97.209633	1397.297	599.963562	256.0473	3.556435	74.54834	102.3473	62.66723	0.0604249	62.56653	30.20569	14022.948	14253.6621	0.29296178	-0.8056613	5.33105421	5.29687452	5.47753906	81.16455	95.17472	48.149414	1407.12
03/07/03	10:22:00	97.209633	1397.297	599.963562	256.0473	4.072581	72.65625	102.3473	64.31213	0.0604249	64.37927	30.77636	14022.948	14253.6621	0.29296178	-0.8056613	5.33105421	5.29687452	5.47753906	81.16455	94.30499	48.149414	1407.12
03/07/03	10:23:00	97.209633	1397.297	599.963562	256.0473	3.569356	72.65625	102.3473	59.14246	0.0604249	58.77319	30.77636	14022.948	14253.6621	0.29296178	-0.8056613	5.33105421	5.29687452	5.47753906	81.16455	92.6853	48.149414	1407.12
03/07/03	10:24:00	97.209633	1397.297	599.963562	256.0473	4.078046	72.65625	102.3473	62.19726	0.0604249	61.12305	30.47425	14022.948	14253.6621	0.29296178	-0.8056613	5.33105421	5.29687452	5.47753906	81.16455	94.30499	48.149414	1407.12
03/07/03	10:25:00	97.209633	1397.297	599.963562	256.0473	3.823708	72.65625	102.3473	59.10888	0.0604249	58.80676	30.80093	14022.948	14253.6621	0.29296178	-0.8056613	5.33105421	5.29687452	5.47753906	81.16455	112.5	47.651367	1407.12
03/07/03	10:26:00	97.209633	1397.297	599.963562	256.0473	4.076674	72.65625	102.3473	63.50647	0.0604249	62.7008	30.4071	14022.948	14253.6621	0.29296178	-0.8056613	5.33105421	5.29687452	5.47753906	81.16455	112.7439	47.651367	1407.12
03/07/03	10:27:00	97.209633	1397.297	599.963562	256.0473	4.076674	72.65625	102.3473	61.62658	0.0604249	59.88098	29.16504	14022.948	14253.6621	0.29296178	-0.8056613	5.33105421	5.29687452	5.47753906	81.16455	112.2556	47.651367	1407.12
03/07/03	10:28:00	97.209633	1397.297	599.963562	256.0473	4.076674	72.65625	102.3473	60.82092	0.0604249	61.45874	30.77636	14022.948	14253.6621	0.29296178	-0.8056613	5.33105421	5.29687452	5.47753906	81.16455	106.0919	47.651367	1407.12
03/07/03	10:29:00	97.209633	1397.297	599.963562	256.0473	4.076674	72.65625	102.3473	58.60535	0.0604249	58.03467	31.27991	14022.948	14253.6621	0.29296178	-0.8056613	5.33105421	5.29687452	5.47753906	81.16455	110.2808	47.651367	1407.12
03/07/03	10:30:00	97.209633	1397.297	599.963562	256.0473	3.810123	70.52002	102.3473	56.55761	0.0604249	55.31555	30.70923	14022.948	14253.6621	0.29296178	-0.8056613	5.33105421	5.29687452	5.47753906	81.16455	115.749	47.651367	1407.12
03/07/03	10:31:00	97.209633	1397.297	599.963562	256.0473	3.810123	68.109131	102.3473	59.14246	0.0604249	59.20959	33.93188	14022.948	14253.6621	0.29296178	-0.8056613	5.33105421	5.29687452	5.47753906	81.16455	114.4365	47.651367	1407.12
03/07/03	10:32:00	97.064621	1397.297	599.963562	256.0473	3.810123	66.033936	102.3473	55.95337	0.0604249	55.78552	31.24634	14022.948	14253.6621	0.29296178	-0.8056613	5.33105421	5.29687452	5.47753906	81.16455	117.1641	47.651367	1407.12
03/07/03	10:33:00	97.064621	1397.297	599.963562	256.0473	3.810123	67.163086	102.3473	59.24316	0.0604249	57.5647	30.44067	14022.948	14253.6621	0.29296178	-0.8056613	5.33105421	5.29687452	5.47753906	82.75146	115.5114	47.167965	1407.12
03/07/03	10:34:00	97.064621	1397.297	599.963562	256.0473	4.065246	65.087883	102.3473	60.61951	0.0604249	59.17603	31.27991	14022.948	14253.6621	0.29296178	-0.8056613	5.33105421	5.29687452	5.47753906	82.75146	116.2226	47.167965	1407.12
03/07/03	10:35:00	97.064621	1397.297	599.963562	256.0473	4.065246	65.087883	102.3473	58.84033	0.0604249	62.96936	29.50073	14022.948	14253.6621	0.29296178	-0.8056613	5.33105421	5.29687452	5.47753906	82.75146	116.6943	47.167965	1407.12
03/07/03	10:36:00	97.064621	1397.297	599.963562	256.0473	3.807214	64.019775	102.3473	60.25024	0.0604249	59.94812	30.44067	14022.948	14253.6621	0.29296178	-0.8056613	5.33105421	5.29687452	5.54589796	82.75146	114.4365	47.167965	1407.12
03/07/03	10:37:00	97.064621	1397.297	599.963562	256.0473	4.054383	63.012695	102.3473	62.19726	0.0604249	62.96936	30.47425	14022.948	14253.6621	0.29296178	-0.8056613	5.33105421	5.29687452	5.54589796	82.75146	113.8349	47.167965	1407.12
03/07/03	10:38:00	97.064621	1397.297	599.963562	256.0473	3.813003	56.573486	102.3473	60.58594	0.0604249	60.04883	30.70923	14022.948	14253.6621	0.29296178	-0.8056613	5.33105421	5.29687452	5.54589796	82.75146	123.8866	47.167965	1407.12
03/07/03	10:39:00	96.925125	1397.297	599.963562	256.0473	3.813003	51.660152	102.3473	55.34912	0.0604249	55.68481	30.87707	14022.948	14253.6621	0.29296178	-0.8056613	5.33105421	5.29687452	5.54589796	82.75146	121.875	47.167965	1407.12
03/07/03	10:40:00	96.910576	1397.297	599.963562	256.0473	4.065751	52.819824	102.3473	62.90222	0.0604249	63.50647	30.87707	14022.948	14253.6621	0.29296178	-0.8056613	5.33105421	5.29687452	5.54589796	82.75146	117.2812	47.167965	1407.12
03/07/03	10:41:00	96.866943	1397.297	599.963562	256.0473	3.806153	55.963131	102.3473	63.20434	0.0604249	64.37927	30.23925	14022.948	14253.6621	0.29296178	-0.8056613	5.33105421	5.29687452	5.54589796	82.75146	129.6286	47.167965	1407.12
03/07/03	10:42:00	96.866943	1397.297	599.963562	256.0473	3.806153	57.092285	102.3473	70.18676	0.0604249	70.38818	30.57495	14022.948	14253.6621	0.29296178	-0.8056613	5.33105421	5.29687452	5.54589796	82.75146	131.8346	47.167965	1407.12
03/07/03	10:43:00	96.866943	1397.297	599.963562	256.0473	3.806153	51.538086	102.3473	69.21326	0.0604249	69.24683	31.04492	14022.948	14253.6621	0.29296178	-0.8056613	5.33105421	5.29687452	5.54589796	82.75146	133.6965	47.167965	1407.12
03/07/03	10:44:00	96.866943	1397.297	599.963562	256.0473	3.806153	50.531006	102.3473	70.82458	0.0604249	71.22742	31.04492	14022.948	14253.6621	0.29296178	-0.8056613	5.33105421	5.29687452	5.54589796	82.75146	116.4587	47.167965	1407.12
03/07/03	10:45:00	96.866943	1397.297	599.963562	256.0473	3.806153	52.575684	102.3473	68.54186	0.0604249	68.00475	30.67566	14022.948	14253.6621	0.29296178	-0.8056613	5.33105421	5.29687452	5.54589796	82.75146	122.2126	47.167965	1407.12
03/07/03	10:46:00	96.866943	1397.297	599.963562	256.0473	3.806153	53.582764	102.3473	72.06665	0.0604249	72.40234	31.01135	14022.948	14253.6621	0.29296178	-0.8056613	5.33105421	5.29687452	5.54589796	82.75146	117.0468	47.167965	1407.12
03/07/03	10:47:00	96.866943	1397.297	599.963562	256.0473	3.806153	52.545166	102.3473	72.36877	0.0604249	72.50305	30.67566	14022.948	14253.6621	0.29296178	-0.8056613	5.33105421	5.29687452	5.54589796	82.75146	120.4012	47.167965	1407.12
03/07/03	10:48:00	96.866943	1397.297	599.963562	256.0473	3.806153	53.552246	102.3473	66.39343	0.0604249	65.82275	31.21277	14022.948	14253.6621	0.29296178	-0.8056613	5.33105421	5.29687452	5.54589796	82.75146	113.3513	47.167965	1407.12
03/07/03	10:49:00	96.866943	1397.297	599.963562	256.0473	4.07172	54.650875	102.3473	73.61084	0.0604249	74.71862	31.01135	14022.948	14253.6621	0.29296178	-0.8056613	5.33105421	5.29687452	5.54589796	82.75146	112.8656	47.167965	1407.12
03/07/03	10:50:00	96.866943	1397.297	599.963562	256.0473	3.817175	53.613281	102.3473	67.26624	0.0604249	67.70263	30.70923	14022.948	14253.6621	0.29296178	-0.8056613	5.33105421	5.29687452	5.54589796	82.75146	123.7757	47.167965	1407.12
03/07/03	10:51:00	96.866943	1397.297	599.963562	256.0473	3.813793	51.538086	102.3473	67.43407	0.0604249	69.17969	30.17212	14022.948	14253.6621	0.29296178	-0.8056613	5.33105421	5.29687452	5.54589796	82.75146	131.5218	47.167965	1407.12
03/07/03	10:52:00	96.866943	1397.297	599.963562	256.0473	4.065816	50.531006	102.3473	67.50122	0.0604249	67.76978	30.54138	14022.948	14253.6621	0.29296178	-0.8056613	5.33105421	5.29687452	5.54589796	82.75146	115.6303	47.167965	1407.12
03/07/03	10:53:00	96.866943	1397.297	599.963562	256.0473	4.065816	49.401852	102.3473	68.13904	0.0604249	67.80334	30.70923	14022.948	14253.6621	0.29296178	-0.8056613	5.33105421	5.29687452	5.54589796	82.75146	114.5564	47.167965	1407.12
03/07/03	10:54:00	96.866943	1397.297	599.963562	256.0473	4.065816	47.387691	102.3473	69.14612	0.0604249	67.09839	31.31348	14022.948	14253.6621	0.29296178	-0.8056613	5.33105421	5.29687452	5.54589796	82.75146	119.2552	47.167965	1407.12
03/07/03	10:55:00	96.866943	1397.297	599.963562	256.0473	4.065816	48.394772	102.3473	65.38635	0.0604249	64.61425	31.04492	14022.948	14253.6621	0.29296178	-0.8056613	5.33105421	5.29687452	5.54589796	82.75146	117.2812	47.167965	1407.12
03/07/03	10:56:00	96.866943	1397.297	599.963562	256.0473	4.058464	49.401852	102.3473	69.21326	0.0604249	67.40051	30.70923	14022.948	14253.6621	0.29296178	-0.8056613	5.33105421	5.29687452	5.54589796	82.75146	112.8656	47.167965	1407.12
03/07/03	10:57:00	96.866943	1397.297	599.963562	256.0473	4.058464	51.446529	102.3473	62.29797	0.0604249	62.43225	30.70923	14022.948	14253.6621	0.29296178	-0.8056613	5.33105421	5.29687452	5.54589796	82.75146	123.4424	47.167965	1407.12
03/07/03	10:58:00	96.866943	1397.297	599.963562	256.0473	4.313262	52.484131	102.3473	73.14087	0.0604249	72.57019	30.33996	14022.948	14253.6621	0.29296178	-0.8056613	5.33105421	5.29687452	5.54589796	82.75146	133.0788	47.167965	1407.12
03/07/03	10:59:00	96.866943	1397.297	599.963562	256.0473	3.786307	53.582764	102.3473	67.26624	0.0604249	66.05774	30.70923	14022.948	14253.6621	0.29296178	-0.8056613	5.33105421	5.29687452	5.54589796	82.75146	134.0043	47.167965	1407.12
03/07/03	11:00:00	96.866943	1397.297	599.963562	256.0473	4.043427	49.096676	102.3473	70.89172	0.0604249	70.5896	31.27991	14022.948	14253.6621	0.29296178	-0.8056613	5.33105421	5.29687452	5.54589796	82.75146	123.1082	47.167965	1407.12
03/07/03	11:01:00	96.866943	1397.297	599.963562	256.0473	4.037203	44.793897	102.3473	74.95361	0.0604249	74.18152	31.27991	14022.948	14253.6621	0.29296178	-0.8056613	5.33105421	5.29687452	5.54589796	84.33838	122.3249	47.167965	1407.12
03/07/03	11:02:00	96.866943	1397.297	599.963562	256.0473	3.78174	47.845455	102.3473	73.54369	0.0604249	72.77161	30.80993	14022.948	14253.6621	0.29296178	-0.8056613	5.33105421	5.29687452	5.54589796	84.33838	135.4314	47.167965	1407.12
03/07/03	11:03:00	96.866943	1397.297	599.963562	256.0473	3.78174	48.852535	102.3473	71.52954	0.0604249	70.62317	30.4071	14022.948	14253.6621	0.29296178	-0.8056613	5.33105421	5.29687452	5.54589796	84.33838	133.1819	47.167965	1407.12
03/07/03	11:04:00	96.866943	1397.297	599.963562	256.0473	4.0435	52.301025	102.3473	73.44299	0.0604249	74.14794	31.27991	14022.948	14253.6621	0.29296178	-0.8056613	5.33105421	5.29687452	5.54589796	84.33838	116.2226	47.167965	1407.12
03/07/03	11:05:00	96.866943	1397.297	599.963562	256.0473	3.785628	53.308105	102.3473	74.24866	0.0604249	75.79284	30.17212	14022.948	14253.6621	0.29296178	-0.8056613	5.33105421	5.29687452	5.54589796	84.33838	114.5564	47.167965	1407.12
03/07/03	11:06:00	96.866943	1397.297	599.963562	256.0473	3.785628	55.322266	102.3473	72.90588	0.0604249	72.36877	30.7428	14022.948	14253.6621	0.29296178	-0.8056613	5.33105421	5.29687452	5.54589796	84.33838	114.5564	47.167965	1407.12
03/07/03	11:07:00	96.866943	1397.297	599.963562	256.0473	3.785628	55.322266	102.3473	74.24866	0.0604249	73.67798	30.47425	14022.948	14253.6621	0.29296178	-0.8056613	5.33105421	5.29687452	5.54589796	84.33838	114.1962	47.167965	1407.12
03/07/03	11:08:00	96.866943	1397.297	599.963562	256.0473	3.785628	55.322266	102.3473	71.12671	0.0604249	69.51538	31.24634	14022.948	14253.6621	0.29296178	-0.8056613	5.33105421	5.29687452	5.54589796	84.33838	105.4427	47.651367	1407.12

DATE	TIME	BAFI002 Total Air Flow KPPH	REAI001 CEMS CO2 %	BAAI052 Boiler CO PPM	BATE055 SCR Outlet Temp. DEG F	BATI020 AH Air Outlet Temp. DEG F	AEFY136 Fisher FW Valve Demand %	Total Coal Feed
03/07/03	10:00:00	2323.746	10.38696	0	603.6547	521.9234	0 40.91698	
03/07/03	10:01:00	2323.746	10.78979	0	603.6547	521.9234	0 40.91698	
03/07/03	10:02:00	2282.786	10.58838	0	603.6547	521.9234	0 40.96048	Total Coal Feed
03/07/03	10:03:00	2318.195	10.58227	0	603.6547	521.9234	0 40.96048	151.438
03/07/03	10:04:00	2283.685	10.38696	0	603.6547	521.9234	0 40.96048	154.1235
03/07/03	10:05:00	2320.071	10.38696	0	603.6547	521.9234	0 41.98074	155.0635
03/07/03	10:06:00	2320.071	10.57617	0	603.6547	521.9234	0 41.98074	153.6871
03/07/03	10:07:00	2285.542	10.57617	0	603.6547	521.9234	0 40.91707	144.6905
03/07/03	10:08:00	2320.309	10.57617	0	603.6547	521.9234	0 40.9156	141.0315
03/07/03	10:09:00	2323.166	10.57617	0	603.6547	521.9234	0 40.9156	146.5369
03/07/03	10:10:00	2323.166	10.58227	0	603.6547	521.9234	0 40.96776	143.0792
03/07/03	10:11:00	2323.166	10.38086	0	603.6547	521.9234	0 41.99929	143.7842
03/07/03	10:12:00	2323.166	10.48462	0	603.6547	521.9234	0 41.99929	149.021
03/07/03	10:13:00	2323.166	10.48462	0	603.6547	521.9234	0 41.99929	154.0564
03/07/03	10:14:00	2320.229	10.68603	0	603.6547	521.9234	0 42.10542	153.4521
03/07/03	10:15:00	2320.229	10.47851	0	603.6547	521.9234	0 41.07853	147.2754
03/07/03	10:16:00	2320.229	10.47851	0	603.6547	521.9234	0 42.11295	154.8285
03/07/03	10:17:00	2320.274	10.68603	0	603.6547	521.9234	0 41.08465	156.1377
03/07/03	10:18:00	2320.274	10.48462	0	603.6547	521.9234	0 41.08465	155.802
03/07/03	10:19:00	2320.274	10.48462	0	603.6547	521.9234	0 41.11295	151.7401
03/07/03	10:20:00	2320.274	10.68603	0	612.7563	521.9234	0 40.0879	162.8851
03/07/03	10:21:00	2318.103	10.48462	0	612.7563	521.9234	0 42.12717	155.4999
03/07/03	10:22:00	2318.103	10.68603	0	612.7563	521.9234	0 41.0971	159.5282
03/07/03	10:23:00	2318.103	10.48462	0	612.7563	521.9234	0 41.0971	148.7524
03/07/03	10:24:00	2318.103	10.2771	0	612.7563	521.9234	0 40.08144	153.855
03/07/03	10:25:00	2318.103	10.67993	0	612.7563	521.9234	0 41.19346	148.786
03/07/03	10:26:00	2318.103	10.2771	0	612.7563	521.9234	0 41.19346	156.6748
03/07/03	10:27:00	2354.102	10.48462	0	612.7563	521.9234	0 41.19346	150.733
03/07/03	10:28:00	2318.79	10.48462	0	612.7563	521.9234	0 41.19346	153.1165
03/07/03	10:29:00	2318.79	10.48462	0	612.7563	521.9234	0 41.19346	147.9803
03/07/03	10:30:00	2318.799	10.48462	0	612.7563	521.9234	0 41.24045	142.6428
03/07/03	10:31:00	2283.22	10.47851	0	612.7563	521.9234	0 41.24045	152.3444
03/07/03	10:32:00	2322.233	10.48462	0	612.7563	521.9234	0 41.24045	143.0457
03/07/03	10:33:00	2322.233	10.48462	0	612.7563	521.9234	0 41.24045	147.309
03/07/03	10:34:00	2322.233	10.48462	0	612.7563	529.4234	0 42.24629	151.1359
03/07/03	10:35:00	2322.233	10.38086	0	612.7563	529.4234	0 41.22252	151.3708
03/07/03	10:36:00	2322.233	10.58227	0	612.7563	529.4234	0 41.22252	150.6995
03/07/03	10:37:00	2287.406	10.48462	0	612.7563	529.4234	0 41.11559	155.7013
03/07/03	10:38:00	2289.974	10.48462	0	612.7563	529.4234	0 41.11559	151.4044
03/07/03	10:39:00	2289.974	10.48462	0	612.7563	529.4234	0 41.11559	141.9714
03/07/03	10:40:00	2288.132	10.68603	0	612.7563	529.4234	0 41.11559	157.3462
03/07/03	10:41:00	2324.155	10.48462	0	612.7563	529.4234	0 41.11559	157.8833
03/07/03	10:42:00	2288.965	10.48462	0	612.7563	529.4234	0 41.11559	171.2103
03/07/03	10:43:00	2332.012	10.48462	0	612.7563	529.4234	0 41.11559	169.5654
03/07/03	10:44:00	2297.11	10.68603	0	612.7563	529.4234	0 41.11559	173.1574
03/07/03	10:45:00	2297.11	10.88745	0	612.7563	529.4234	0 41.11559	167.2827
03/07/03	10:46:00	2289.558	10.88745	0	612.7563	529.4234	0 39.9913	175.5408
03/07/03	10:47:00	2327.285	10.68603	0	612.7563	529.4234	0 41.0091	175.6079
03/07/03	10:48:00	2290.053	10.88745	0	612.7563	529.4234	0 41.0091	163.4894
03/07/03	10:49:00	2290.053	10.88745	0	612.7563	529.4234	0 39.95196	179.4012
03/07/03	10:50:00	2290.053	10.68603	0	612.7563	529.4234	0 39.95196	165.7385
03/07/03	10:51:00	2326.826	10.68603	0	612.7563	529.4234	0 41.06258	166.8463
03/07/03	10:52:00	2292.285	10.88745	0	612.7563	529.4234	0 41.06258	165.8728
03/07/03	10:53:00	2292.285	10.78369	0	612.7563	529.4234	0 41.06258	166.712
03/07/03	10:54:00	2326.789	10.78369	0	612.7563	529.4234	0 41.06258	167.6184
03/07/03	10:55:00	2291.428	10.68603	0	612.7563	529.4234	0 41.06258	161.106
03/07/03	10:56:00	2291.428	10.88745	0	612.7563	529.4234	0 41.04959	167.3834
03/07/03	10:57:00	2291.428	10.88745	0	612.7563	529.4234	0 41.04959	155.4999
03/07/03	10:58:00	2253.685	10.88745	0	612.7563	529.4234	0 41.04959	176.1114
03/07/03	10:59:00	2292.611	10.88745	0	612.7563	529.4234	0 41.04959	164.0936
03/07/03	11:00:00	2292.611	10.68603	0	612.7563	529.4234	0 42.06496	172.8217
03/07/03	11:01:00	2257.811	10.89355	0	612.7563	529.4234	0 42.06496	180.4755
03/07/03	11:02:00	2293.081	10.89355	0	612.7563	529.4234	0 41.04401	177.1857
03/07/03	11:03:00	2293.081	10.89355	0	612.7563	529.4234	0 41.04401	172.6202
03/07/03	11:04:00	2293.081	11.08887	0	612.7563	529.4234	0 41.04401	178.9313
03/07/03	11:05:00	2294.327	11.08887	0	612.7563	529.4234	0 41.04401	180.274
03/07/03	11:06:00	2297.696	11.08887	0	612.7563	529.4234	0 41.04401	176.0779
03/07/03	11:07:00	2297.696	11.08276	0	612.7563	529.4234	0 42.10498	178.4613
03/07/03	11:08:00	2297.696	11.28418	0	612.7563	529.4234	0 41.06018	171.9489

DATE	TIME	MAJI007 Generator Megawatts MW	MAJI008 Generator Megavars MVAR	NAJT101 13.8 kv NAA01 Gen Aux Load MW	NAJT201 13.8 kv NAA02 Gen Aux Load MW	AEFI135 FW Flow Comp. KPPH	AEFI131 SH Spray Flow KPPH	FDFI002 Sootblower Steam Flow KPPH	FDFI022 SCR Sootblower Stm Flow KPPH	AAFY018A Cont. Blowdown Flow PCT	FBFI021 MS to Aux Stm. Flow KPPH	AETE137 Feedwater Temp. DEG F	AAPTOO6 Selected Drum Pressure PSIG	FDPT002 Sootblower Steam Pressure PSIG	FDTT002 Sootblower Steam Temp. DEG F	FDPT022 A.H. Sootblower Stm. Press PSIG	FDTT022 SCR/AH Sootblower Stm Temp DEG F	ABPIOO7 Turbine Throttle Pressure PSIG	ABTE008 Main Stm Temp DEG F	AEFI111 Reheater Spray Flow KPPH	ABPI010 Cold Reheat Stm Press PSIG	ABTE016 Cold Reheat Temp DEG F
03/07/03	11:09:00	221.06934	20.8068676	14.2895498	7.8808589	1309.133301	131.6747	0	1.9952712	0	0	363.7297	2482.0859	316.40622	629.63867	379.57761	803.58887	2397.583	976.7924	0	364.15921	564.3542
03/07/03	11:10:00	221.06934	20.8068676	14.2895498	7.8808589	1309.133301	131.6747	0	1.9952712	0	0	363.7297	2482.0859	316.40622	629.63867	379.57761	803.58887	2397.583	978.392	0	364.15921	564.3542
03/07/03	11:11:00	221.06934	20.8068676	14.2895498	7.8808589	1309.133301	127.78	0	1.9952712	0	0	363.7297	2482.0859	316.40622	629.63867	379.57761	803.58887	2397.583	984.9039	0	364.15921	564.3542
03/07/03	11:12:00	221.06934	20.8068676	14.2895498	7.8808589	1309.133301	159.311	0	1.9952712	0	0	363.7297	2482.0859	316.40622	629.63867	379.57761	803.58887	2405.823	988.16	0	364.15921	564.3542
03/07/03	11:13:00	221.06934	20.8068676	14.2895498	7.8808589	1309.133301	152.9742	0	1.9952712	0	0	363.7297	2482.0859	316.40622	629.63867	379.57761	803.58887	2413.147	979.9583	0	364.15921	564.3542
03/07/03	11:14:00	221.06934	20.8068676	14.2895498	7.8808589	1309.133301	134.5217	0	1.9952712	0	0	363.7297	2482.0859	316.40622	629.63867	379.57761	803.58887	2413.147	975.0468	0	364.15921	564.3542
03/07/03	11:15:00	221.06934	20.8068676	14.2895498	7.8808589	1309.133301	130.5507	0	1.9952712	0	0	363.7297	2482.0859	316.40622	629.63867	379.57761	803.58887	2413.147	981.5806	0	364.15921	564.3542
03/07/03	11:16:00	221.06934	20.8068676	14.2895498	7.8808589	1341.636597	153.6608	0	1.9952712	0	0	363.7297	2482.0859	316.40622	639.70947	379.57761	803.58887	2413.147	988.1039	0	364.15921	564.3542
03/07/03	11:17:00	221.06934	20.8068676	14.2895498	7.8808589	1341.636597	158.5161	0	1.9952712	0	0	363.7297	2482.0859	316.40622	639.70947	379.57761	803.58887	2409.485	982.6696	0	364.15921	564.3542
03/07/03	11:18:00	221.06934	20.8068676	14.2895498	7.8808589	1341.636597	131.6747	0	1.9952712	0	0	363.7297	2482.0859	316.40622	639.70947	379.57761	803.58887	2409.485	972.869	0	364.15921	564.3542
03/07/03	11:19:00	221.06934	20.8068676	14.2895498	7.8808589	1341.636597	131.6747	0	1.9952712	0	0	363.7297	2482.0859	316.40622	639.70947	379.57761	803.58887	2409.485	979.3691	0	364.15921	564.3542
03/07/03	11:20:00	221.06934	20.8068676	14.2895498	7.8808589	1341.636597	131.6747	0	1.9952712	0	0	363.7297	2482.0859	316.40622	639.70947	379.57761	803.58887	2402.161	984.2697	0	364.15921	564.3542
03/07/03	11:21:00	221.06934	20.8068676	14.2895498	7.8808589	1341.636597	160.3646	0	1.9952712	0	0	363.7297	2482.0859	316.40622	639.70947	379.57761	803.58887	2405.823	987.537	0	364.15921	564.3542
03/07/03	11:22:00	221.06934	20.8068676	14.2895498	7.8808589	1308.046997	147.9371	0	1.9952712	0	0	363.7297	2482.0859	316.40622	639.70947	379.57761	803.58887	2358.499	976.0909	0	364.15921	564.3542
03/07/03	11:23:00	221.06934	20.8068676	14.2895498	8.0364981	1308.046997	134.6781	0	1.9952712	0	0	363.7297	2482.0859	316.40622	649.78027	379.57761	803.58887	2397.583	972.8803	0	364.15921	564.3542
03/07/03	11:24:00	221.06934	20.8068676	14.2895498	8.0639648	1339.263184	130.8728	0	1.9952712	0	0	363.7297	2482.0859	316.40622	649.78027	379.57761	803.58887	2393.921	981.1708	0	364.15921	564.3542
03/07/03	11:25:00	221.06934	20.8068676	14.2895498	8.0456543	1339.263184	130.8728	0	1.9952712	0	0	363.7297	2482.0859	316.40622	649.78027	379.57761	803.58887	2390.259	984.5052	0	355.98053	564.3542
03/07/03	11:26:00	221.06934	20.8068676	14.2895498	7.5695791	1299.726563	168.5569	0	1.9952712	0	0	363.7297	2482.0859	316.40622	649.78027	379.57761	803.58887	2393.921	987.8623	0	355.98053	564.3542
03/07/03	11:27:00	221.06934	20.8068676	14.2895498	7.4047842	1299.726563	162.3218	0	1.9952712	0	0	363.7297	2482.0859	316.40622	649.78027	379.57761	803.58887	2393.921	981.451	0	355.98053	564.3542
03/07/03	11:28:00	221.06934	20.8068676	14.2895498	7.798461	1299.726563	144.6272	0	1.9952712	0	0	363.7297	2482.0859	316.40622	649.78027	379.57761	803.58887	2393.921	974.962	0	355.98053	564.3542
03/07/03	11:29:00	221.06934	20.8068676	14.2895498	7.6702876	1299.726563	136.5409	0	1.9952712	0	0	363.7297	2482.0859	316.40622	649.78027	379.57761	803.58887	2393.921	983.163	0	355.98053	564.3542
03/07/03	11:30:00	221.06934	13.33005333	14.2895498	7.6702876	1299.726563	167.4291	0	1.9952712	0	0	363.7297	2482.0859	316.40622	649.78027	379.57761	803.58887	2401.245	988.064	0	355.98053	564.3542
03/07/03	11:31:00	221.06934	5.853279591	14.2895498	7.7069082	1299.726563	172.1407	0	1.9952712	0	0	363.7297	2482.0859	316.40622	649.78027	379.57761	803.58887	2401.245	984.7853	0	355.98053	564.3542
03/07/03	11:32:00	221.06934	5.853279591	14.2895498	7.7435298	1299.726563	140.1924	0	1.9952712	0	0	363.7297	2482.0859	316.40622	649.78027	379.57761	803.58887	2404.907	974.4288	0	355.98053	564.3542
03/07/03	11:33:00	221.06934	5.853279591	14.2895498	8.0548096	1299.726563	140.1924	0	1.9952712	0	0	363.7297	2482.0859	316.40622	649.78027	379.57761	803.58887	2412.231	977.6843	0	355.98053	564.3542
03/07/03	11:34:00	221.06934	5.853279591	14.2895498	7.7618408	1333.393066	140.1924	0	1.9952712	0	0	363.7297	2482.0859	316.40622	649.78027	379.57761	803.58887	2408.569	980.9401	0	355.98053	564.3542
03/07/03	11:35:00	221.06934	5.853279591	14.2895498	7.9907227	1333.393066	140.1924	0	1.9952712	0	0	363.7297	2482.0859	316.40622	649.78027	379.57761	803.58887	2412.231	982.5288	0	355.98053	564.3542
03/07/03	11:36:00	221.06934	5.853279591	14.2895498	8.0548096	1333.393066	140.1924	0	1.9952712	0	0	363.7297	2482.0859	316.40622	649.78027	379.57761	803.58887	2412.231	984.1736	0	355.98053	564.3542
03/07/03	11:37:00	221.06934	5.853279591	14.2895498	7.9998784	1333.393066	140.1924	0	1.9952712	0	0	363.7297	2482.0859	316.40622	649.78027	379.57761	803.58887	2408.569	982.5065	0	355.98053	564.3542
03/07/03	11:38:00	221.06934	5.853279591	14.2895498	7.8808589	1333.393066	136.2322	0	1.9952712	0	0	363.7297	2482.0859	316.40622	649.78027	379.57761	803.58887	2404.907	980.8503	0	355.98053	564.3542
03/07/03	11:39:00	221.06934	5.853279591	14.2895498	7.8808589	1333.393066	136.2322	0	1.9952712	0	0	363.7297	2482.0859	316.40622	649.78027	379.57761	803.58887	2404.907	980.8168	0	355.98053	564.3542
03/07/03	11:40:00	221.06934	5.853279591	14.2895498	7.8808589	1333.393066	136.2322	0	1.9952712	0	0	363.7297	2482.0859	316.40622	649.78027	379.57761	803.58887	2404.907	980.8168	0	355.98053	564.3542
03/07/03	11:41:00	221.06934	5.853279591	14.2895498	7.8808589	1333.393066	136.2322	0	1.9952712	0	0	363.7297	2482.0859	316.40622	649.78027	379.57761	803.58887	2401.245	980.8168	0	355.98053	564.3542
03/07/03	11:42:00	221.06934	5.853279591	14.2895498	7.8808589	1333.393066	136.2322	0	1.9952712	0	0	363.7297	2482.0859	316.40622	649.78027	379.57761	803.58887	2393.921	980.8168	0	355.98053	564.3542
03/07/03	11:43:00	221.06934	5.853279591	14.2895498	7.8808589	1333.393066	140.1924	0	1.9952712	0	0	363.7297	2482.0859	316.40622	649.78027	379.57761	803.58887	2390.259	980.7382	0	355.98053	564.3542
03/07/03	11:44:00	221.06934	5.853279591	14.2895498	7.8808589	1333.393066	140.1924	0	1.9952712	0	0	363.7297	2482.0859	316.40622	649.78027	379.57761	803.58887	2382.934	984.0054	0	355.98053	564.3542
03/07/03	11:45:00	221.06934	5.853279591	14.2895498	7.8808589	1301.703125	167.8059	0	1.9952712	0	0	363.7297	2482.0859	316.40622	649.78027	379.57761	803.58887	2386.596	985.6277	0	355.98053	564.3542
03/07/03	11:46:00	221.06934	5.853279591	14.2895498	7.8808589	1301.703125	144.6272	0	1.9952712	0	0	363.7297	2482.0859	316.40622	649.78027	379.57761	803.58887	2386.596	975.7707	0	355.98053	564.3542
03/07/03	11:47:00	221.06934	5.853279591	14.2895498	7.8808589	1301.703125	140.7918	0	1.9952712	0	0	363.7297	2482.0859	316.40622	649.78027	379.57761	803.58887	2393.921	979.0151	0	355.98053	564.3542
03/07/03	11:48:00	221.06934	5.853279591	14.2895498	7.8808589	1301.703125	140.7918	0	1.9952712	0	0	363.7297	2482.0859	316.40622	649.78027	379.57761	803.58887	2393.921	987.1381	0	355.98053	564.3542
03/07/03	11:49:00	221.06934	5.853279591	14.2895498	7.9449453	1301.703125	181.313	0	1.9952712	0	0	363.7297	2482.0859	316.40622	649.78027	379.57761	803.58887	2404.907	990.3945	0	355.98053	564.3542
03/07/03	11:50:00	221.06934	5.853279591	14.2895498	7.9357901	1301.703125	148.7885	0	1.9952712	0	0	363.7297	2482.0859	316.40622	649.78027	379.57761	803.58887	2408.569	975.6698	0	355.98053	564.3542
03/07/03	11:51:00	221.06934	5.853279591	14.2895498	8.0090342	1301.703125	144.0437	0	1.9952712	0	0	363.7297	2482.0859	316.40622	649.78027	379.57761	803.58887	2412.231	972.3918	0	355.98053	564.3542
03/07/03	11:52:00	221.06934	5.853279591	14.2895498	7.7069082	1301.703125	140.0421	0	1.9952712	0	0	363.7297	2482.0859	316.40622	649.78027	379.57761	803.58887	2412.231	977.2807	0	355.98053	564.3542
03/07/03	11:53:00	221.06934	5.853279591	14.2895498	7.7526855	1337.870728	136.2322	0	1.9952712	0	0	363.7297	2482.0859	316.40622	649.78027	379.57761	803.58887	2412.231	980.5477	0	355.98053	564.3542
03/07/03	11:54:00	221.06934	5.853279591	14.2895498	7.7435298	1337.870728	136.2322	0	1.9952712	0	0	363.7297	2482.0859	316.40622	649.78027	379.57761	803.58887	2412.231	980.5477	0	355.98053	564.3542
03/07/03	11:55:00	221.06934	5.853279591	14.2895498	7.8076167	1337.870728	136.2322	0	1.9952712	0	0	363.7297	2482.0859	316.40622	649.78027	379.57761	803.58887	2408.569	980.5477	0	355.98053	564.3542
03/07/03	11:56:00	221.06934	5.853279591	14.2895498	8.0090342	1337.870728	140.6422	0	1.9952712	0	0	363.7297	2482.0859	316.40622	649.78027	379.57761	803.58887	2408.569	979.0151	0	355.98053	564.3542
03/07/03	11:57:00	221.06934	5.853279591	14.2895498	7.4322505	1337.870728	136.8489	0	1.9952712	0	0	363.7297	2482.0859	316.40622	649.78027	379.57761	803.58887	2401.245	977.4826	0	355.98053	564.3542
03/07/03	11:58:00	221.06934	5.853279591	14.2895498	7.5421147	1337.870728	141.2396	0	1.9952712	0	0	363.7297	2482.0859	316.40622	649.78027	379.57761	803.58887	2401.245	977.4826	0	355.98053	564.3542
03/07/03	11:59:00	221.06934	5.853279591	14.2895498	7.8076167	1337.870728	141.2396	0	1.9952712	0	0	363.7297	2482.0859	316.40622	649.78027	379.57761	803.58887	2393.005	977.4826	0	355.98053	564.3542
03/07/03	12:00:00	221.06934	5.853279591	14.2895498	7.8076167	1337.870728	137.4629	0	1.9952712	0	0	363.7297	2482.0859	316.40622	639.70947	379.57761	803.58887	2393.005	977.7964	0	355.98053	564.3542
03/07/03	12:01:00	216.03394	5.853279591	14.2895498	7.8076167	1337.870728	141.6861	0	1.9952712	0	0	363.7297	2482.0859	316.40622	639.70947	379.57761	803.58887	2385.681	981.1977	0	355.98053	564.3542
03/07/03	12:02:00	216.03394	12.90283871	14.2895498	7.8076167	1337.870728	141.6861	0	1.9952712	0	0	363.7297	2482.0859	316.40622	639.70947	379.57761	803.58887	2382.019	986.188	0	355.98053	564.3542
03/07/03	12:03:00	216.03394	12.90283871	14.2895498	8.0181875	1275.459839	178.1505	0	1.9952712	0	0	363.7297	2482.0859	316.40622	639.70947	379.57761	803.58887	2389.343	986.2104	0	355.98053	564.3542
03/07/03	12:04:00	216.03394	12.90283871	14.2895498	7.4322505	1275.459839	152.2846	0	1.9952712	0	0	363.7297	2482.0859	316.40622	639.70947	379.57761	803.58887	2393.005	976.4316	0	355.98053	564.3542
03/07/03	12:05:00	216.03394	5.853279591	14.2895498	7.633666	1308.128906	143.6046	0	1.9952712	0	0	363.7297	2482.0859	316.40622	639.70947	379.57761	803.58887	2396.667	974.8207	0	355.98053	564.3542
03/07/03	12:06:00	216.03394	5.853279591	14.2895498	8.0364981	1308.128906	143.6046	0	1.9952712	0	0	363.7297	2482.0859	316.40622	639.70947	379.57761	803.58887	2400.33	982.988	0	355.98053	564.3542
03/07/03	12:07:00	216.03394	5.853279591	14.2895498	7.7069082	1308.128906	169.8013	0	1.9952712	0	0	363.7297	2482.0859	316.40622	639.70947	379.57761	803.58887	2403.992	986.2664	0	355.98053	564.3542
03/07/03	12:08:00	216.03394	5.853279591	14.2895498	7.7069082	1276.625488	171.2825	0	1.9952712	0	0	363.7297	2482.0859	316.40622	639.70947	379.57761	803.58887	2411.316	982.988	0	355.98053	564.3542
03/07/03	12:09:00	216.03394	5.853279591	14.2895498	7.5695791	1276.625488	147.0808	0	1.9952712	0	0	363.7297	2482.0859	316.40622	639.70947	379.57761	803.58887	2411.316	971.5427	0	355.98053	564.3542
03/07/03	12:10:00	216.03394	5.853279591	14.2895498	8.0090342	1308.395996	139.4395	0	1.9952712	0	0	363.7297	2482.0859	316.40622	639.70947	379.57761	803.58887	2411.316	974.8206	0	355.98053	564.3542
03/07/03	12:11:00	216.03394	5.853279591	14.2895498	7.9266362	1340.553589	139.4395	0	1.9952712	0	0	363.7297	2482.0859	316.40622	639.70947	379.57761	803.58887	2411.316	979.6984	0	355.98053	564.3542
03/07/03	12:12:00	216.03394	5.853279591	14.2895498	8.0548096	1340.553589	139.4395	0	1.9952712	0	0	363.7297	2482.0859	316.40622	639.70947	379.57761	803.58887	2407.654	981.3431	0	355.98053	564.3542
03/07/03	12:13:00	216.03394	5.853279591	14.2895498	7.8900142	1340.553589	139.4395	0	1.9952712	0	0	363.7297	2482.0859	316.40622	639.70947	379.57761	803.58887	2400.33	979.6984	0	355.98053	564.3542
03/07/03	12:14:00	216.03394	5.853279591	14.2895498	7.8900142	1340.553589	139.4395	0	1.9952712	0	0	363.7297	2482.0859	316.40622	639.70947	379.57761	803.58887	2396.667	979.6984	0	355.98053	564.3542
03/07/03	12:15:00	216.03394	5.853279591	14.2895498	7.8900142	1340.553589	139.4395	0	1.9952712	0	0	363.7297	2482.0859	316.40622	639.70947	379.57761	803.58887	2393.005	979.6984	0	355.98053	564.3542
03/07/03	12:16:00	216.03394	5.853279591	14.2895498	7.8900142	1340.553589	139.4395	0	1.9952712	0	0	363.7297	2482.0859	316.40622	639.70947	379.57761	803.58887	2389.343	981.2983	0	355.98053	564.3542
03/07/03	12:17:00	216.03394	5.853279591	14.2895498	7.8900142	1309.85791	143.3111	0	1.9952712	0	0	363.7297	2482.0859	316.40622	639.70947	379.57761	803.58887	2385.681	984.543	0	355.98053	564.3542

DATE	TIME	ABPT024 Hot Reheat Pressure PSIG	ABTE022 Hot Reheat Temp DEG F	AETE119 BFP Hdr Discharge Temp DEG F	AETE130 FW Htr #7 Outlet Temp DEG F	AETE035 FW Htr #7 Casc Drain Temp DEG F	AFPT026 Cold Reheat Ext Hdr Press PSIG	AFTE027 Cold Reheat Ext Hdr Temp DEG F	AFTI017 HP Aux Steam Temp DEG F	AFFI017 Spray Flow to HP Aux Steam KPPH	AETE055 BFBP Discharge Hdr Temp DEG F	AFPY044A DA Pegging Stm Valve PCT	ASFI006 Caulkins LP Stm Flow Output KPPH	ASFI016 Caulkins HP Stm Flow Output KPPH	MAJI002 Unit Megavars MVAR	MAJI004 Unit Megawatts MW	ADPT003C Absolute Cond Vac Calculated IN HGA	DALT004A Cooling Twr Basin Level IN	DAFI027 Cooling Twr Blow-Down Flow GPM	EAFI034 Cooling Twr Blow-Down SDA GPM	DATE014A Water Box Inlet A Temp DEG F	DATE014B Water Box Inlet B Temp DEG F	DATE016A Water Box Outlet A Temp DEG F
03/07/03	11:09:00	335.9375	929.4585	365.0928	360.9864	281.19495	37.170406	283.47711	387.3723	0	254.8895	0	77.5388641	15.8273106	5.00487566	222.29004	1.9128418	57.231445	0	255.32509	83.583405	82.885033	96.22718
03/07/03	11:10:00	335.9375	929.4585	365.0928	360.9864	281.19495	37.170406	283.47711	387.3723	0	254.8895	0	77.321312	15.8273106	5.00487566	222.29004	1.9128418	57.231445	0	255.32509	83.568718	82.885033	96.22718
03/07/03	11:11:00	335.9375	931.0352	365.0928	360.9864	281.19495	37.170406	283.47711	387.3723	0	254.8895	0	77.321312	15.6427155	5.00487566	222.29004	1.9128418	57.231445	0	261.87592	82.142212	82.885033	96.22718
03/07/03	11:12:00	335.9375	931.0352	365.0928	360.9864	281.19495	37.170406	283.47711	387.3723	0	254.8895	0	77.321312	15.6748238	5.00487566	222.29004	1.9128418	57.231445	0	265.14957	82.098167	82.885033	96.22718
03/07/03	11:13:00	335.9375	931.0352	365.0928	360.9864	281.19495	37.170406	283.47711	387.3723	0	254.8895	0	77.321312	15.6748238	5.00487566	222.29004	1.9128418	57.231445	0	271.63583	82.083519	82.885033	96.22718
03/07/03	11:14:00	335.9375	931.0352	365.0928	360.9864	281.19495	37.170406	283.47711	387.3723	0	254.8895	0	77.321312	16.4584064	5.00487566	222.29004	1.9128418	57.231445	0	278.08301	83.495392	82.885033	96.22718
03/07/03	11:15:00	335.9375	931.0352	365.0928	360.9864	281.19495	37.170406	283.47711	387.3723	0	254.8895	0	90.1163864	15.7069082	5.00487566	222.29004	1.9128418	57.231445	0	281.33463	83.480698	82.885033	96.22718
03/07/03	11:16:00	335.9375	931.0352	365.0928	360.9864	281.19495	37.170406	283.47711	387.3723	0	254.8895	0	97.0623474	15.7069082	5.00487566	222.29004	1.9128418	57.231445	0	284.54892	82.024757	82.885033	96.22718
03/07/03	11:17:00	335.9375	932.5894	365.0928	360.9864	281.19495	37.170406	283.47711	387.3723	0	254.8895	0	97.0623474	15.7069082	5.00487566	222.29004	1.9128418	57.231445	0	291.08618	83.451378	82.885033	96.22718
03/07/03	11:18:00	335.9375	932.5894	365.0928	360.9864	281.19495	37.170406	283.47711	387.3723	0	254.8895	0	97.0623474	15.8549328	5.00487566	222.29004	1.9128418	57.231445	0	294.30017	83.451378	82.885033	96.22718
03/07/03	11:19:00	335.9375	932.5894	365.0928	360.9864	281.19495	37.170406	283.47711	387.3723	0	254.8895	0	91.5744629	15.8549328	5.00487566	222.29004	1.9128418	57.231445	0	294.30017	82.010109	82.885033	96.22718
03/07/03	11:20:00	335.9375	932.5894	365.0928	360.9864	281.19495	37.170406	283.47711	387.3723	0	254.8895	0	91.5744629	15.8549328	5.00487566	222.29004	1.9128418	57.231445	0	294.30017	81.995399	82.885033	96.22718
03/07/03	11:21:00	335.9375	930.9008	365.0928	360.9864	281.19495	37.170406	283.47711	387.3723	0	254.8895	0	91.5744629	15.4444666	5.00487566	222.29004	1.9128418	57.231445	0	294.30017	81.966049	82.885033	96.22718
03/07/03	11:22:00	335.9375	930.9008	365.0928	360.9864	281.19495	37.170406	283.47711	387.3723	0	254.8895	0	99.0656433	15.4444666	5.00487566	222.29004	1.9128418	57.231445	0	291.08618	83.392731	82.885033	96.22718
03/07/03	11:23:00	335.9375	929.3129	365.0928	360.9864	281.19495	37.170406	283.47711	387.3723	0	254.8895	0	99.0656433	15.8425112	5.00487566	222.29004	1.9128418	57.231445	0	291.08618	82.010231	82.885033	96.22718
03/07/03	11:24:00	335.9375	929.3129	365.0928	360.9864	281.19495	37.170406	283.47711	387.3723	0	254.8895	0	93.7734756	15.6980581	5.00487566	222.29004	1.9128418	57.231445	0	287.83618	82.157242	82.885033	96.22718
03/07/03	11:25:00	335.9375	929.3129	365.0928	360.9864	281.19495	37.170406	283.47711	387.3723	0	254.8895	0	93.7734756	15.6588011	5.00487566	222.29004	1.9128418	57.231445	0	284.54892	82.157242	82.885033	96.22718
03/07/03	11:26:00	335.9375	930.6705	365.0928	360.9864	281.19495	37.170406	283.47711	387.3723	0	254.8895	0	91.5423431	15.7373409	5.00487566	222.29004	1.9128418	57.231445	0	284.54892	81.693306	81.649269	96.22718
03/07/03	11:27:00	335.9375	930.6705	365.0928	360.9864	281.19495	37.170406	283.47711	387.3723	0	254.8895	0	91.5423431	15.7373409	5.00487566	222.29004	1.9128418	57.231445	0	278.08301	81.693306	81.781448	96.22718
03/07/03	11:28:00	335.9375	931.9828	365.0928	360.9864	281.19495	37.170406	283.47711	387.3723	0	254.8895	0	98.3807144	15.7890797	5.00487566	222.29004	2.2180176	57.231445	0	274.73572	81.693306	83.29631	96.22718
03/07/03	11:29:00	335.9375	931.9828	365.0928	360.9864	281.19495	37.170406	283.47711	387.3723	0	254.8895	0	98.3807144	15.631155	5.00487566	222.29004	2.2180176	57.231445	0	268.26627	81.693306	81.898865	96.22718
03/07/03	11:30:00	335.9375	933.6268	365.0928	360.9864	281.19495	37.170406	283.47711	387.3723	0	254.8895	0	98.3807144	15.6222229	5.00487566	222.29004	2.2180176	57.231445	0	268.26627	81.693306	83.325607	96.22718
03/07/03	11:31:00	335.9375	933.6268	365.0928	360.9864	281.19495	37.170406	283.47711	387.3723	0	254.8895	0	93.7408752	15.6222229	-5.0659227	222.29004	2.2180176	57.231445	0	265.03125	81.693306	81.898827	96.22718
03/07/03	11:32:00	335.9375	931.9828	365.0928	360.9864	281.19495	37.170406	283.47711	387.3723	0	254.8895	0	93.7408752	15.6564274	-5.0659227	222.29004	2.2180176	57.231445	0	261.81604	81.869423	81.854729	96.22718
03/07/03	11:33:00	335.9375	931.9828	365.0928	360.9864	281.19495	37.170406	283.47711	387.3723	0	254.8895	0	91.6459732	15.5634241	-5.0659227	222.29004	2.2180176	57.231445	0	261.81604	83.222824	81.810661	96.22718
03/07/03	11:34:00	335.9375	930.2941	365.0928	360.9864	281.19495	37.170406	283.47711	387.3723	0	254.8895	0	91.6459732	15.5288477	-5.0659227	222.29004	2.2180176	57.231445	0	261.81604	83.193436	81.810661	96.22718
03/07/03	11:35:00	335.9375	928.639	365.0928	360.9864	281.19495	37.170406	283.47711	387.3723	0	254.8895	0	91.6459732	15.5288477	-5.0659227	222.29004	2.2180176	57.231445	0	258.56067	81.722519	81.737213	96.22718
03/07/03	11:36:00	335.9375	926.9951	365.0928	360.9864	281.19495	37.170406	283.47711	387.3723	0	254.8895	0	96.0589523	15.5288477	-5.0659227	222.29004	2.2180176	57.231445	0	252.11003	83.120033	81.722473	96.22718
03/07/03	11:37:00	335.9375	925.3401	365.0928	360.9864	281.19495	37.170406	283.47711	387.3723	0	254.8895	0	96.0589523	15.5288477	-5.0659227	222.29004	2.2180176	57.231445	0	239.0126	81.663689	81.663689	96.22718
03/07/03	11:38:00	335.9375	925.3401	365.0928	360.9864	281.19495	37.170406	283.47711	387.3723	0	254.8895	0	98.3954086	17.7373409	-5.0659227	222.29004	2.2180176	57.231445	0	222.48645	81.634293	83.061302	96.22718
03/07/03	11:39:00	335.9375	923.6738	365.0928	360.9864	281.19495	37.170406	283.47711	387.3723	0	254.8895	0	93.4276657	18.3077888	-5.0659227	222.29004	2.2180176	57.231445	0	198.86359	83.031937	81.634293	96.22718
03/07/03	11:40:00	335.9375	923.6738	365.0928	360.9864	281.19495	37.170406	283.47711	387.3723	0	254.8895	0	93.4276657	20.1306973	-5.0659227	222.29004	2.2180176	57.231445	0	178.72871	83.017242	81.590187	96.22718
03/07/03	11:41:00	335.9375	923.6738	365.0928	360.9864	281.19495	37.170406	283.47711	387.3723	0	254.8895	0	93.4276657	19.0457439	-5.0659227	222.29004	2.2180176	57.231445	0	172.19069	83.017242	82.973183	96.22718
03/07/03	11:42:00	335.9375	923.6738	365.0928	360.9864	281.19495	37.170406	283.47711	387.3723	0	254.8895	0	93.4276657	19.0736771	-5.0659227	222.29004	2.2180176	57.231445	0	182.03867	83.017242	82.958496	96.22718
03/07/03	11:43:00	335.9375	925.2169	365.0928	360.9864	281.19495	37.170406	283.47711	387.3723	0	254.8895	0	93.4276657	18.2473907	-5.0659227	222.29004	2.2180176	57.231445	0	192.11514	83.017242	82.958496	96.22718
03/07/03	11:44:00	335.9375	925.2169	365.0928	360.9864	281.19495	37.170406	283.47711	387.3723	0	254.8895	0	97.8822632	16.385767	-5.0659227	222.29004	2.2180176	57.231445	0	205.31287	83.017242	82.929115	96.22718
03/07/03	11:45:00	335.9375	928.4373	365.0928	360.9864	281.19495	37.170406	283.47711	387.3723	0	254.8895	0	97.8822632	15.9610968	-5.0659227	222.29004	2.2180176	57.231445	0	215.16991	83.017242	82.929115	96.22718
03/07/03	11:46:00	335.9375	928.4373	365.0928	360.9864	281.19495	37.170406	283.47711	387.3723	0	254.8895	0	97.8822632	15.8913603	-5.0659227	222.29004	2.2180176	57.231445	0	225.01172	83.017242	82.899727	96.22718
03/07/03	11:47:00	335.9375	930.0364	365.0928	360.9864	281.19495	37.170406	283.47711	387.3723	0	254.8895	0	93.1580887	15.8913603	-5.0659227	222.29004	2.2180176	57.231445	0	228.26636	83.017242	82.885086	96.22718
03/07/03	11:48:00	335.9375	931.6467	365.0928	360.9864	281.19495	37.170406	283.47711	387.3723	0	254.8895	0	93.1580887	15.7256365	-5.0659227	222.29004	2.2180176	57.231445	0	228.26636	83.017242	82.885086	96.22718
03/07/03	11:49:00	335.9375	933.2346	365.0928	360.9864	281.19495	37.170406	283.47711	387.3723	0	254.8895	0	100.592323	16.1846066	-5.0659227	222.29004	2.2180176	57.231445	0	224.94196	83.017242	81.399063	96.22718
03/07/03	11:50:00	335.9375	933.2346	365.0928	360.9864	281.19495	37.170406	283.47711	387.3723	0	254.8895	0	109.037117	15.7007227	-5.0659227	222.29004	2.2180176	57.231445	0	224.94196	83.017242	82.826309	96.22718
03/07/03	11:51:00	335.9375	931.5795	365.0928	360.9864	281.19495	37.170406	283.47711	387.3723	0	254.8895	0	109.037117	15.9164915	-5.0659227	222.29004	2.2180176	57.231445	0	228.3351	83.017242	82.796974	96.22718
03/07/03	11:52:00	335.9375	931.5795	365.0928	360.9864	281.19495	37.170406	283.47711	387.3723	0	254.8895	0	104.665657	15.9164915	-5.0659227	222.29004	2.2180176	57.231445	0	234.90703	83.017242	82.811676	96.22718
03/07/03	11:53:00	335.9375	929.3801	365.0928	360.9864	281.19495	37.170406	283.47711	387.3723	0	254.8895	0	104.665657	15.9164915	-5.0659227	222.29004	2.2180176	57.231445	0	241.3643	83.017242	82.811676	96.22718
03/07/03	11:54:00	335.9375	929.3801	365.0928	360.9864	281.19495	37.170406	283.47711	387.3723	0	254.8895	0	104.665657	15.9164915	-5.0659227	222.29004	2.2180176	57.231445	0	251.29982	83.017242	82.811676	96.22718
03/07/03	11:55:00	335.9375	927.7587	365.0928	360.9864	281.19495	37.170406	283.47711	387.3723	0	254.8895	0	104.665657	15.508625	-5.0659227	222.29004	2.2180176	57.231445	0	254.52515	83.017242	82.811676	96.22718
03/07/03	11:56:00	335.9375	926.2157	365.0928	360.9864	281.19495	37.170406	283.47711	387.3723	0	254.8895	0	104.665657	15.684679	-5.0659227	222.29004	2.2180176	57.231445	0	257.77081	81.560883	81.487419	96.22718
03/07/03	11:57:00	335.9375	926.2157	365.0928	360.9864	281.19495	37.170406	283.47711	387.3723	0	254.8895	0	112.01812	15.684679	-5.0659227	222.29004	2.2180176	57.231445	0	264.2608	82.988029	81.590347	96.22718
03/07/03	11:58:00	335.9375	924.7623	365.0928	360.9864	281.19495	37.170406	283.47711	387.3723	0	254.8895	0	112.01812	15.8466806	-5.0659227	222.29004	2.2180176	57.231445	0	270.82632	81.707916	81.781372	96.22718
03/07/03	11:59:00	335.9375	924.7623	365.0928	360.9864	281.19495	37.170406	283.47711	387.3723	0	254.8895	0	112.01812	15.8620281	-5.0659227	222.29004	2.2180176	57.231445	0	277.29242	81.707916	81.88414	96.22718
03/07/03	12:00:00	335.9375	924.7623	365.0928	360.9864	281.19495	37.170406	283.47711	387.3723	0	254.8895	0	107.777245	15.7422132	-5.0659227	222.29004	2.2180176	57.231445	0	280.55322	81.273018	83.472198	96.22718
03/07/03	12:01:00	335.9375	924.7623	365.0928	360.9864	281.19495	37.170406	283.47711	387.3723	0	254.8895	0	107.777245	15.7422132	-5.0659227	217.25464	2.2180176	57.231445	0	270.42068	81.390488	82.177635	96.22718
03/07/03	12:02:00	335.9375	927.9424	365.0928	360.9864	281.19495	37.170406	283.47711	387.3723	0	254.8895	0	107.777245	15.5982924	-5.0659227	217.25464	2.2180176	57.231445	0	260.5549	81.390488	82.265617	96.22718
03/07/03	12:03:00	325.8667	929.6086	365.0928	360.9864	281.19495	37.170406	283.47711	387.3723	0	254.8895	0	107.777245	15.7284498	-5.0659227	217.25464	2.2180176	57.231445	0	250.6122	81.390488	82.265617	96.22718
03/07/03	12:04:00	325.8667	929.6086	365.0928	360.9864	281.19495	37.170406	283.47711	387.3723	0	254.8895	0	114.983864	15.7284498	-5.0659227	217.25464	2.2180176	57.231445	0	240.71336	81.390488	82.265617	96.22718
03/07/03	12:05:00	325.8667	929.6086	365.0928	360.9864	281.19495	37.170406	283.47711	387.3723	0	254.8895	0	117.012833	16.129303	-5.0659227	217.25464	2.2180176	57.231445	0	227.57779	81.390488	82.265617	96.22718
03/07/03	12:06:00	325.8667	929.6086	365.0928	360.9864	281.19495	37.170406	283.47711	387.3723	0	254.8895	0	109.59742	16.129303	-5.0659227	217.25464	2.2180176	57.231445	0	217.49191	81.390488	82.265617	96.22718
03/07/03	12:07:00	325.8667	931.2861	365.0928	360.9864	281.19495	37.170406	283.47711	387.3723	0	254.8895	0	109.59742	16.129303	-5.0659227	217.25464	2.2180176	57.231445	0	214.21938	81.551727	82.265617	96.22718
03/07/03	12:08:00	325.8667	929.6533	365.0928	360.9864	281.19495	37.170406	283.47711	387.3723	0	254.8895	0	109.59742	16.129303	-5.0659227	217.25464	2.2180176	57.231445	0	214.21938	82.949486	82.265617	96.22718
03/07/03	12:09:00	325.8667	927.9983	365.0928	360.9864	281.19495	37.170406	283.47711	387.3723	0	254.8895	0	109.59742	16.129303	-5.0659227	217.25464	2.2180176	57.231445	0	214.21938	81.4636	82.265617	96.22718
03/07/03	12:10:00	325.8667	927.9983	365.0928	360.9864	281.19495	37.170406	283.47711	387.3723	0	254.8895	0	109.59742	15.9659472	-5.0659227	217.25464	2.2180176	57.231445	0	214.21938	81.448883	82.265617	96.22718
03/07/03	12:11:00	325.8667	927.9983	365.0928	360.9864	281.19495	37.170406	283.47711	387.3723	0	254.8895	0	109.59742	15.9659472	-5.0659227	217.25464	2.2180176	57.231445	0	214.21938	81.419502	82.265617	96.22718
03/07/03	12:12:00	325.8667	926.3544	365.0928	360.9864	281.19495	37.170406	283.47711	387.3723	0	254.8895	0	109.59742	15.9659472	-5.0659227	217.25464	2.2180176	57.231445	0	214.21938	81.390129	82.265617	96.22718
03/07/03	12:13:00	325.8667	924.7105	365.0928	360.9864	281.19495	37.170406	283.47711	387.3723	0	254.8895	0	109.59742	15.9659472	-5.0659227	217.25464	2.2180176	57.231445	0	214.21938	82.788002	82.265617	96.22718
03/07/03	12:14:00	325.8667	924.7105	365.0928	360.9864	281.19495	37.170406	283.47711	387.3723	0	254.8895	0	109.59742	15.5416355	-5.0659227	217.25464	2.2180176	57.231445	0	207.74561	82.773331	82.05986	96.22718
03/07/03	12:15:00	325.8667	924.7105	365.0928	360.9864	281.19495	37.170406	283.47711	387.3723	0	254.8895	0	109.59742	15.6970921	-5.0659227	217.25464	2.2180176	57.231445	0	204.46989	82.773331	82.05986	96.22718
03/07/03	12:16:00	325.8667	924.7105	365.0928	360.9864	281.19495	37.170406	283.47711	387.3723	0	254.8895	0	107.511917	15.6970921	-5.0659227	217.25464	2.2180176	57.231445	0	194.63303	82.773331	82.05986	96.22718
03/07/03	12:17:00	325.8667	926.3096	365.0928	360.9864	281.19495	37.170406	283.47711	387.3723	0	254.8895	0	107.511917	15.753336	-5.0659227	217.25464	2.2180176	57.231445	0	188.14967	82.773331	82.05986	96.22718

DATE	TIME	DATE016B Water Box Outlet B Temp DEG F	ABFI018 Main Steam Flow KPPH	MBEL100 Excitation Losses KW	BATI013 AH Gas Outlet Temp DEG F	BAAI046 Excess Oxygen PCT	RMAT500 Relative Humidity PCT	BATI011 AH Air Inlet Temp DEG F	JCFT152 Coal Fdr A Flow Rate KPPH	JCFT252 Coal Fdr B Flow Rate KPPH	JCFT352 Coal Fdr C Flow Rate KPPH	JCFT452 Coal Fdr D Flow Rate KPPH	NAET102 13.8 Kv NAA01 Aux Scr Volts VOLTS	NAET202 13.8 Kv NAAO2 Aux Scr Volts VOLTS	NAIT101 13.8 Kv NAAO1 Aux Scr Current AMPS	NAIT201 13.8 Kv NAA02 Aux Scr Current AMPS	MAII006A Generator Arm Current Phase A KA	MAII006B Generator Arm Current Phase B KA	MAII006C Generator Arm Current Phase C KA	RMTT500 Ambient Temp DEG F	ADFI001 Cond Xfer Flow Calculated KPPH	ADLT001 Condenser Hotwell Level IN	TSTMFLO Total Stm Flow KPPH
03/07/03	11:09:00	96.866943	1397.297	599.963562	256.0473	3.785628	51.324463	102.3473	75.59143	0.0604249	74.08081	30.6085 2	14022.948	14253.6621	0.29296178	-0.8056613	5.33105421	5.29687452	5.54589796	84.33838	101.8655	47.651367	1407.12
03/07/03	11:10:00	96.866943	1397.297	599.963562	256.0473	3.785628	51.324463	102.3473	71.09314	0.0604249	71.56311	30.64209	14022.948	14253.6621	0.29296178	-0.8056613	5.33105421	5.29687452	5.54589796	84.33838	106.6084	47.651367	1407.12
03/07/03	11:11:00	96.866943	1397.297	599.963562	256.0473	3.785628	46.807858	102.3473	74.45007	0.0604249	73.84582	30.44067	14022.948	14253.6621	0.29296178	-0.8056613	5.33105421	5.29687452	5.54589796	84.33838	114.4365	47.651367	1407.12
03/07/03	11:12:00	96.866943	1397.297	599.963562	256.0473	3.785628	46.746826	102.3473	63.4729	0.0604249	62.39868	31.27991	14022.948	14253.6621	0.29296178	-0.8056613	5.33105421	5.29687452	5.54589796	84.33838	95.60661	47.651367	1407.12
03/07/03	11:13:00	96.866943	1397.297	599.963562	256.0473	3.785628	47.875973	102.3473	64.44641	0.0604249	67.36694	31.38061	14022.948	14253.6621	0.29296178	-0.8056613	5.33105421	5.29687452	5.54589796	84.33838	93.57405	47.651367	1407.12
03/07/03	11:14:00	96.866943	1397.297	599.963562	256.0473	3.785628	45.831295	102.3473	64.245	0.0604249	64.31213	31.38061	14022.948	14253.6621	0.29296178	-0.8056613	5.33105421	5.45800734	5.54589796	84.33838	107.634	47.651367	1407.12
03/07/03	11:15:00	96.866943	1397.297	599.963562	256.0473	3.785628	47.845455	102.3473	67.13195	0.0604249	66.62842	30.8435	14022.948	14253.6621	0.29296178	-0.8056613	5.33105421	5.45800734	5.54589796	84.33838	113.3513	47.651367	1407.12
03/07/03	11:16:00	96.866943	1397.297	599.963562	256.0473	3.785628	46.77734	102.3473	65.45348	0.0604249	65.75561	30.87707	14022.948	14253.6621	0.29296178	-0.8056613	5.33105421	5.45800734	5.54589796	84.33838	98.43749	47.651367	1407.12
03/07/03	11:17:00	96.866943	1397.297	599.963562	256.0473	4.037306	48.822018	102.3473	68.87756	0.0604249	68.81042	30.7428	14022.948	14253.6621	0.29296178	-0.8056613	5.33105421	5.45800734	5.54589796	84.33838	97.45604	47.651367	1407.12
03/07/03	11:18:00	96.866943	1397.297	599.963562	256.0473	3.785756	48.822018	102.3473	68.91113	0.0604249	67.73621	29.56787	14022.948	14253.6621	0.29296178	-0.8056613	5.33105421	5.45800734	5.54589796	84.33838	112.7439	47.651367	1407.12
03/07/03	11:19:00	96.866943	1397.297	599.963562	256.0473	3.785756	51.019287	102.3473	68.17261	0.0604249	68.13904	30.77636	14022.948	14253.6621	0.29296178	-0.8056613	5.33105421	5.45800734	5.54589796	84.33838	116.1044	47.167965	1407.12
03/07/03	11:20:00	96.866943	1397.297	599.963562	256.0473	3.785756	51.019287	102.3473	70.48888	0.0604249	71.63024	30.50781	14022.948	14253.6621	0.29296178	-0.8056613	5.33105421	5.45800734	5.54589796	84.33838	117.1641	47.167965	1407.12
03/07/03	11:21:00	97.581573	1397.297	599.963562	256.0473	4.039999	53.430172	102.3473	66.12488	0.0604249	66.09131	30.70923	14022.948	14253.6621	0.29296178	-0.8056613	5.33105421	5.45800734	5.54589796	84.33838	121.4234	47.167965	1407.12
03/07/03	11:22:00	97.581573	1397.297	599.963562	256.0473	4.04064	54.437252	102.3473	72.13378	0.0604249	72.2345	30.50781	14022.948	14253.6621	0.29296178	-0.8056613	5.33105421	5.45800734	5.54589796	84.33838	136.6426	46.68457	1407.12
03/07/03	11:23:00	96.241852	1397.297	599.963562	256.0473	4.04064	53.430172	102.3473	75.1886	0.0604249	74.81934	30.77636	14022.948	14253.6621	0.29296178	-0.8056613	5.33105421	5.45800734	5.54589796	84.33838	135.8364	46.68457	1407.12
03/07/03	11:24:00	96.241852	1397.297	599.963562	256.0473	3.789446	52.362061	102.3473	73.47656	0.0604249	72.83875	30.87707	14022.948	14253.6621	0.29296178	-0.8056613	5.33105421	5.45800734	5.54589796	84.33838	135.5328	46.68457	1407.12
03/07/03	11:25:00	96.241852	1397.297	599.963562	256.0473	4.03946	50.286865	102.3473	75.15503	0.0604249	75.15503	30.8435	14022.948	14253.6621	0.29296178	-0.8056613	5.33105421	5.45800734	5.54589796	84.33838	136.8437	46.68457	1407.12
03/07/03	11:26:00	96.241852	1397.297	599.963562	256.0473	3.782842	51.324463	102.3473	70.45531	0.0604249	70.05249	30.20569	14022.948	14253.6621	0.29296178	-0.8056613	5.1699214	5.45800734	5.54589796	84.33838	133.9018	46.68457	1375.519
03/07/03	11:27:00	96.241852	1397.297	599.963562	256.0473	4.037398	52.331543	102.3473	70.69031	0.0604249	70.92529	30.20569	14022.948	14253.6621	0.29296178	-0.8056613	5.1699214	5.29687452	5.54589796	84.33838	140.1163	46.68457	1375.519
03/07/03	11:28:00	96.241852	1397.297	599.963562	256.0473	3.775883	52.331543	102.3473	71.02599	0.0604249	71.39526	30.67566	14022.948	14253.6621	0.29296178	-0.8056613	5.1699214	5.29687452	5.54589796	84.33838	139.33	46.68457	1375.519
03/07/03	11:29:00	96.241852	1397.297	599.963562	256.0473	3.775883	53.369141	102.3473	75.52428	0.0604249	75.25573	30.70923	14022.948	14253.6621	0.29296178	-0.8056613	5.1699214	5.29687452	5.54589796	84.33838	133.0786	46.68457	1375.519
03/07/03	11:30:00	96.241852	1397.297	599.963562	256.0473	3.775883	52.362061	102.3473	67.60193	0.0604249	67.56836	30.80993	14022.948	14253.6621	0.29296178	-0.8056613	5.1699214	5.29687452	5.54589796	85.86426	139.7237	46.68457	1375.519
03/07/03	11:31:00	96.241852	1397.297	579.931458	256.0473	4.031096	51.324463	102.3473	66.93054	0.0604249	67.2998	29.16504	14022.948	14253.6621	0.29296178	-0.8056613	5.1699214	5.29687452	5.54589796	85.86426	138.9352	46.68457	1375.519
03/07/03	11:32:00	96.241852	1397.297	579.931458	256.0473	4.031096	51.324463	102.3473	71.83167	0.0604249	71.16028	31.27991	14022.948	14253.6621	0.29296178	-0.8056613	5.1699214	5.29687452	5.54589796	85.86426	135.4314	46.68457	1375.519
03/07/03	11:33:00	96.241852	1397.297	579.931458	256.0473	3.504518	53.338623	102.3473	61.66016	0.0604249	62.83508	30.20569	14022.948	14253.6621	0.29296178	-0.8056613	5.1699214	5.29687452	5.54589796	85.86426	136.5423	46.68457	1375.519
03/07/03	11:34:00	96.241852	1397.297	579.931458	256.0473	4.020284	53.338623	102.3473	67.26624	0.0604249	70.45531	30.54138	14022.948	14253.6621	0.29296178	-0.8056613	5.1699214	5.29687452	5.54589796	85.86426	134.1068	46.68457	1375.519
03/07/03	11:35:00	96.241852	1397.297	579.931458	256.0473	3.764292	52.301025	102.3473	61.62658	0.0604249	61.99585	29.06433	14022.948	14253.6621	0.29296178	-0.8056613	5.1699214	5.29687452	5.54589796	85.86426	135.9375	46.68457	1375.519
03/07/03	11:36:00	96.241852	1397.297	579.931458	256.0473	4.017694	51.293945	102.3473	66.49414	0.0604249	65.31921	30.67566	14022.948	14253.6621	0.29296178	-0.8056613	5.1699214	5.29687452	5.54589796	85.86426	132.6653	46.68457	1375.519
03/07/03	11:37:00	96.241852	1397.297	579.931458	256.0473	4.017694	52.331543	102.3473	65.48705	0.0604249	66.09131	30.7428	14022.948	14253.6621	0.29296178	-0.8056613	5.1699214	5.29687452	5.54589796	85.86426	139.7237	46.68457	1375.519
03/07/03	11:38:00	96.241852	1397.297	579.931458	256.0473	4.017694	50.073242	102.3473	68.17261	0.0604249	67.60193	30.70923	14022.948	14253.6621	0.29296178	-0.8056613	5.1699214	5.29687452	5.54589796	85.86426	114.2445	46.68457	1375.519
03/07/03	11:39:00	96.241852	1397.297	579.931458	256.0473	4.017694	50.073242	102.3473	66.56127	0.0604249	67.23267	31.24634	14022.948	14253.6621	0.29296178	-0.8056613	5.1699214	5.29687452	5.54589796	85.86426	139.034	46.68457	1375.519
03/07/03	11:40:00	96.241852	1397.297	579.931458	256.0473	4.017694	50.073242	102.3473	68.27331	0.0604249	67.46765	31.24634	14022.948	14253.6621	0.29296178	-0.8056613	5.1699214	5.29687452	5.54589796	85.86426	145.5957	46.68457	1375.519
03/07/03	11:41:00	96.241852	1397.297	579.931458	256.0473	4.017694	50.073242	102.3473	68.23974	0.0604249	68.03833	31.34704	14022.948	14253.6621	0.29296178	-0.8056613	5.1699214	5.29687452	5.54589796	85.86426	143.9833	46.68457	1375.519
03/07/03	11:42:00	96.241852	1397.297	579.931458	256.0473	4.017694	48.852535	102.3473	76.66564	0.0604249	75.75928	30.50781	14022.948	14253.6621	0.29296178	-0.8056613	5.1699214	5.29687452	5.54589796	85.86426	148.0278	46.68457	1375.519
03/07/03	11:43:00	96.241852	1397.297	579.931458	256.0473	3.762693	47.784424	106.4537	73.81225	0.0604249	76.69922	30.50781	14022.948	14253.6621	0.29296178	-0.8056613	5.1699214	5.29687452	5.54589796	85.86426	154.8295	46.201168	1375.519
03/07/03	11:44:00	96.416199	1397.297	579.931458	256.0473	3.762693	47.784424	106.4537	79.88831	0.0604249	79.61975	33.42834	14022.948	14253.6621	0.29296178	-0.8056613	5.1699214	5.29687452	5.54589796	85.86426	156.5056	46.201168	1375.519
03/07/03	11:45:00	96.416199	1397.297	579.931458	256.0473	3.762693	45.617676	106.4537	75.02075	0.0604249	74.7522	31.01135	14022.948	14253.6621	0.29296178	-0.8056613	5.1699214	5.29687452	5.54589796	85.86426	144.8392	46.201168	1375.519
03/07/03	11:46:00	96.416199	1397.297	579.931458	256.0473	3.762693	44.458008	106.4537	76.06139	0.0604249	76.43066	30.60852	14022.948	14253.6621	0.29296178	-0.8056613	5.1699214	5.29687452	5.54589796	85.86426	148.3984	46.201168	1375.519
03/07/03	11:47:00	96.416199	1397.297	579.931458	256.0473	3.762693	44.458008	106.4537	70.99243	0.0604249	71.19385	30.7428	14022.948	14253.6621	0.29296178	-0.8056613	5.1699214	5.29687452	5.54589796	85.86426	147.377	46.201168	1375.519
03/07/03	11:48:00	96.416199	1397.297	579.931458	256.0473	3.762693	45.495605	106.4537	70.62317	0.0604249	70.82458	30.23925	14022.948	14253.6621	0.29296178	-0.8056613	5.1699214	5.29687452	5.54589796	85.86426	156.5056	46.201168	1375.519
03/07/03	11:49:00	96.416199	1397.297	579.931458	256.0473	3.762693	45.495605	106.4537	63.9093	0.0604249	63.97644	30.23925	14022.948	14253.6621	0.29296178	-0.8056613	5.1699214	5.29687452	5.54589796	85.86426	135.8364	46.68457	1375.519
03/07/03	11:50:00	96.416199	1397.297	579.931458	256.0473	4.013563	44.152832	106.4537	64.37927	0.0604249	65.1178	30.4071	14022.948	14253.6621	0.29296178	-0.8056613	5.1699214	5.29687452	5.54589796	85.86426	136.6428	46.68457	1375.519
03/07/03	11:51:00	96.416199	1397.297	579.931458	256.0473	4.013563	44.152832	106.4537	61.15662	0.0604249	59.91455	30.77636	14022.948	14253.6621	0.29296178	-0.8056613	5.1699214	5.29687452	5.54589796	85.86426	139.527	46.68457	1375.519
03/07/03	11:52:00	96.416199	1397.297	579.931458	256.0473	4.009846	41.955563	106.4537	66.49414	0.0604249	66.02416	31.27991	14022.948	14253.6621	0.29296178	-0.8056613	5.1699214	5.29687452	5.54589796	85.86426	135.7353	46.68457	1375.519
03/07/03	11:53:00	96.416199	1397.297	579.931458	256.0473	4.009846	40.948483	106.4537	63.80859	0.0604249	63.60717	29.43359	14022.948	14253.6621	0.29296178	-0.8056613	5.1699214	5.29687452	5.54589796	85.86426	134.5157	46.68457	1375.519
03/07/03	11:54:00	96.416199	1397.297	579.931458	256.0473	4.009846	40.948483	106.4537	63.5736	0.0604249	63.17078	30.47425	14022.948	14253.6621	0.29296178	-0.8056613	5.1699214	5.29687452	5.54589796	85.86426	139.527	46.68457	1375.519
03/07/03	11:55:00	96.416199	1397.297	579.931458	256.0473	4.009846	43.145752	106.4537	68.10547	0.0604249	66.19202	31.21277	14022.948	14253.6621	0.29296178	-0.8056613	5.1699214	5.29687452	5.54589796	85.86426	143.9833	46.68457	1375.519
03/07/03	11:56:00	96.416199	1397.297	579.931458	256.0473	4.009846	43.511959	106.4537	67.16552	0.0604249	65.88989	30.8435	14022.948	14253.6621	0.29296178	-0.8056613	5.1699214	5.29687452	5.54589796	85.86426	151.6028	46.68457	1375.519
03/07/03	11:57:00	96.416199	1397.297	579.931458	256.0473	4.009846	43.511959	106.4537	70.85815	0.0604249	70.45531	29.5343	14022.948	14253.6621	-0.0732576	-0.4394769	5.1699214	5.29687452	5.54589796	85.86426	152.5059	46.68457	1375.519
03/07/03	11:58:00	96.416199	1397.297	579.931458	256.0473	4.009846	43.511959	106.4537	67.40051	0.0604249	68.0719	30.44067	14022.948	14253.6621	-0.0732576	-0.4394769	5.1699214	5.29687452	5.54589796	85.86426	156.2422	46.68457	1375.519
03/07/03	11:59:00	96.416199	1397.297	579.931458	256.0473	4.009846	43.511959	106.4537	74.92004	0.0604249	74.98717	31.21277	14022.948	14253.6621	-0.0732576	-0.4394769	5.1699214	5.29687452	5.54589796	85.86426	159.8912	46.201168	1375.519
03/07/03	12:00:00	96.247765	1397.297	579.931458	256.0473	4.009846	43.511959	106.4537	74.88647	0.0604249	75.39001	30.60852	14022.948	14253.6621	-0.0732576	-0.4394769	5.1699214	5.29687452	5.54589796	85.86426	160.32	46.201168	1375.519
03/07/03	12:01:00	96.305885	1397.297	579.931458	256.0473	4.009846	44.610596	106.4537	79.04907	0.0604249	78.98193	31.1792	14022.948	14253.6621	-0.0732576	-0.4394769	5.1699214	5.29687452	5.38476515	85.86426	160.1486	46.201168	1375.519
03/07/03	12:02:00	96.305885	1397.297	579.931458	256.0473	3.759429	44.610596	106.4537	78.81409	0.0604249	77.7063	31.1792	14022.948	14253.6621	-0.0732576	-0.4394769	5.1699214	5.29687452	5.38476515	85.86426	158.7707	46.201168	1375.519
03/07/03	12:03:00	96.305885	1397.297	579.931458	256.0473	3.759429	39.849854	106.4537	72.70446	0.0604249	70.65769	30.50781	14022.948	14253.6621	-0.0732576	-0.4394769	5.1699214	5.29687452	5.38476515	85.86426	157.5551	46.201168	1375.519
03/07/03	12:04:00	96.305885	1397.297	579.931458	256.0473	3.759429	38.842773	106.4537	70.69031	0.0604249	74.58435	31.1792	14022.948	14253.6621	-0.0732576	-0.4394769	5.1699214	5.29687452	5.38476515	85.86426	158.511	46.201168	1375.519
02/07/03	12:05:00	96.305885	1397.297	579.931458	256.0473	3.759429	38.842773	106.4537	68.60901	0.0604249	67.23267	30.80993	14022.948	14253.6621	-0.0732576	-0.4394769	5.1699214	5.29687452	5.38476515	85.86426	149.6884	46.201168	1375.519
03/07/03	12:06:00	96.305885	1397.297	579.931458	256.0473	3.759429	36.645504	106.4537	67.06482	0.0604249	66.09131	31.1792	14022.948	14253.6621	-0.0732576	-0.4394769	5.1699214	5.29687452	5.38476515	85.86426	144.934	46.201168	1375.519
03/07/03	12:07:00	96.305885	1397.297	579.931458	256.0473	3.759429	36.462402	106.4537	65.88989	0.0604249	66.25916	30.4071	14022.948	14253.6621	-0.0732576	-0.4394769	5.1699214	5.29687452	5.38476515	85.86426	160.9185	46.201168	1375.519
03/07/03	12:08:00	96.305885	1397.297	579.931458	256.0473	3.767544	37.866211	106.4537	62.19726	0.0604249	62.19726	30.67566	14022.948	14253.6621	-0.0732576	-0.4394769	5.1699214	5.29687452	5.38476515	85.86426	153.135	46.201168	1375.519
03/07/03	12:09:00	96.305885	1397.297	579.931458	256.0473	4.032582	37.866211	106.4537	65.65491	0.0604249	64.84924	30.20569	14022.948	14253.6621	-0.0732576	-0.4394769	5.1699214	5.29687452	5.38476515	85.86426	143.6969	46.68457	1407.019
03/07/03	12:10:00	96.363663	1397.297	579.931458	256.0473	3.779976	36.859131	106.4537	65.38635	0.0604249	64.41284	30.70923	14022.948	14253.6621	-0.0732576	-0.4394769	5.1699214	5.29687452	5.38476515	85.86426	148.4909	46.68457	1407.019
03/07/03	12:11:00	96.334587	1397.297	579.931458	256.0473	4.040182	35.821533	106.4537	65.41992	0.0604249	64.58069	30.70923	14022.948	14253.6621	-0.0732576	-0.4394769	5.1699214	5.29687452	5.38476515	85.86426	159.5472	46.68457	1407.019
03/07/03	12:12:00	94.906212	1397.297	579.931458	256.0473	4.040182	34.7229	106.4537	65.58777	0.0604249	66.72913	30.23925	14022.948	14253.6621	-0.0732576	-0.4394769	5.1699214	5.29687452	5.38476515	85.86426	155.1839	46.68457	1407.019
03/07/03	12:13:00	96.32003	1397.297	579.931458	256.0473	4.040182	34.7229	106.4537	72.06665	0.0604249	71.8988	30.44067	14022.948	14253.6621	-0.0732576	-0.4394769	5.1699214	5.29687452	5.38476515	85.86426	156.1543	46.68457	1407.019
03/07/03	12:14:00	96.32003	1397.297	579.931458	256.0473	4.040182	35.821533	106.4537	73.04015	0.0604249	72.97301	31.27991	14022.948	14253.6621	-0.0732576	-0.4394769	5.1699214	5.29687452	5.38476515	85.86426	156.7687	46.68457	1407.019
03/07/03	12:15:00	96.32003	1397.297	579.931458	256.0473	4.040182	35.821533	106.4537	75.75928	0.0604249	76.32995	31.34704	14022.948	14253.6621	-0.0732576	-0.4394769	5.1699214	5.29687452	5.38476515	85.86426	157.5551	46.68457	1407.019
03/07/03	12:16:00	96.32003	1397.297	579.931458	256.0473	4.040182	36.828613	106.4537	77.84058	0.0604249	77.4377	30.60852	14022.948	14253.6621	-0.0732576	-0.4394769	5.1699214	5.29687452	5.38476515	85.86426	156.5056	46.68457	1407.019
03/07/03	12:17:00	96.32003	1397.297	579.931458	256.0473	3.790074	36.828613	106.4537	74.78577	0.0604249	74.08081	30.7428	14022.948	14253.6621	-0.0732576	-0.4394769	5.1699214	5.29687452	5.38476515	85.86426			1407.019

DATE	TIME	BAFI002 Total Air Flow KPPH	REAI001 CEMS CO2 %	BAAI052 Boiler CO PPM	BATE055 SCR Outlet Temp. DEG F	BATI020 AH Air Outlet Temp. DEG F		AEFY136 Fisher FW Valve Demand %	
03/07/03	11:09:00	2297.696	11.08276	0	612.7563	529.4234	0	41.06018	180.3412
03/07/03	11:10:00	2297.696	11.08276	0	612.7563	529.4234	0	41.06018	173.3588
03/07/03	11:11:00	2297.696	11.08276	0	612.7563	529.4234	0	41.06018	178.797
03/07/03	11:12:00	2298.915	11.08276	0	612.7563	529.4234	0	41.06018	157.2119
03/07/03	11:13:00	2298.915	11.29028	0	612.7563	529.4234	0	41.06018	163.2544
03/07/03	11:14:00	2298.915	11.08887	0	612.7563	529.4234	0	40.04082	159.9962
03/07/03	11:15:00	2298.915	11.08887	0	612.7563	529.4234	0	41.16278	164.6643
03/07/03	11:16:00	2334.43	11.08887	0	612.7563	529.4234	0	41.16278	162.1466
03/07/03	11:17:00	2299.781	11.08887	0	612.7563	529.4234	0	42.22096	168.4912
03/07/03	11:18:00	2299.781	11.08887	0	612.7563	529.4234	0	41.10015	166.2756
03/07/03	11:19:00	2299.781	11.08887	0	612.7563	529.4234	0	42.14516	167.1484
03/07/03	11:20:00	2299.781	10.88745	0	612.7563	529.4234	0	42.14516	172.6874
03/07/03	11:21:00	2341.801	11.08887	0	612.7563	529.4234	0	41.06558	162.9858
03/07/03	11:22:00	2302.164	11.08276	0	612.7563	529.4234	0	41.06558	174.9365
03/07/03	11:23:00	2300.012	11.08276	0	612.7563	529.4234	0	41.06558	180.8447
03/07/03	11:24:00	2300.012	10.78369	0	612.7563	529.4234	0	41.06558	177.2528
03/07/03	11:25:00	2334.775	10.99121	0	612.7563	529.4234	0	41.06558	181.214
03/07/03	11:26:00	2264.644	10.99121	0	612.7563	529.4234	0	39.91846	170.7739
03/07/03	11:27:00	2302.426	10.99121	0	612.7563	529.4234	0	39.91846	171.8817
03/07/03	11:28:00	2263.547	10.98511	0	612.7563	529.4234	0	39.90855	173.1573
03/07/03	11:29:00	2300.731	10.98511	0	612.7563	529.4234	0	39.90855	181.5497
03/07/03	11:30:00	2300.731	11.19263	0	612.7563	529.4234	0	39.90855	166.0406
03/07/03	11:31:00	2300.731	11.19263	0	612.7563	529.4234	0	39.90855	163.4558
03/07/03	11:32:00	2300.731	11.18652	0	612.7563	529.4234	0	39.90855	174.3323
03/07/03	11:33:00	2300.731	11.19263	0	612.7563	529.4234	0	40.96602	154.7614
03/07/03	11:34:00	2299.014	11.18652	0	612.7563	529.4234	0	40.96602	168.3234
03/07/03	11:35:00	2299.014	11.19263	0	612.7563	529.4234	0	40.96602	152.7472
03/07/03	11:36:00	2300.748	10.98511	0	612.7563	529.4234	0	39.94221	162.5494
03/07/03	11:37:00	2300.748	11.19873	0	612.7563	529.4234	0	41.02746	162.3816
03/07/03	11:38:00	2297.375	10.78369	0	612.7563	529.4234	0	41.02746	166.5442
03/07/03	11:39:00	2261.021	10.98511	0	612.7563	529.4234	0	41.02746	165.1007
03/07/03	11:40:00	2298.622	10.98511	0	612.7563	529.4234	0	41.02746	167.0477
03/07/03	11:41:00	2261.704	10.98511	0	612.7563	529.4234	0	41.02746	167.6855
03/07/03	11:42:00	2303.635	10.98511	0	612.7563	529.4234	0	41.02746	182.9932
03/07/03	11:43:00	2268.729	10.98511	0	612.7563	529.4234	0	39.90655	181.0797
03/07/03	11:44:00	2268.729	10.98511	0	612.7563	529.4234	0	39.90655	192.9968
03/07/03	11:45:00	2268.729	10.98511	0	612.7563	529.4234	0	39.90655	180.8447
03/07/03	11:46:00	2274.727	10.98511	0	612.7563	529.4234	0	39.90655	183.161
03/07/03	11:47:00	2309.335	11.18652	0	612.7563	529.4234	0	39.90655	172.9895
03/07/03	11:48:00	2309.335	10.98511	0	612.7563	529.4234	0	39.90655	171.7474
03/07/03	11:49:00	2309.335	11.08887	0	612.7563	529.4234	0	39.90655	158.1854
03/07/03	11:50:00	2319.103	11.28418	0	612.7563	529.4234	0	39.90655	159.9646
03/07/03	11:51:00	2326.661	11.28418	0	612.7563	529.4234	0	39.76319	151.908
03/07/03	11:52:00	2321.179	11.08887	0	612.7563	529.4234	0	40.78219	163.8586
03/07/03	11:53:00	2284.173	11.09497	0	612.7563	529.4234	0	40.78219	156.9098
03/07/03	11:54:00	2326.378	11.08887	0	612.7563	529.4234	0	40.78219	157.2791
03/07/03	11:55:00	2289.688	10.88745	0	612.7563	529.4234	0	40.78219	165.5707
03/07/03	11:56:00	2289.688	10.88745	0	612.7563	529.4234	0	40.78219	163.9593
03/07/03	11:57:00	2289.688	11.08276	0	612.7563	529.4234	0	40.83719	170.9082
03/07/03	11:58:00	2289.688	10.99121	0	612.7563	529.4234	0	40.87642	165.9735
03/07/03	11:59:00	2289.688	10.99121	0	612.7563	529.4234	0	40.84834	181.1804
03/07/03	12:00:00	2289.688	11.08887	0	612.7563	529.4234	0	40.84834	180.9454
03/07/03	12:01:00	2254.471	11.08887	0	612.7563	529.4234	0	40.84834	189.2706
03/07/03	12:02:00	2291.526	11.08887	0	612.7563	529.4234	0	40.84834	187.76
03/07/03	12:03:00	2291.667	11.08887	0	612.7563	529.4234	0	38.79211	173.9294
03/07/03	12:04:00	2290.597	11.08887	0	612.7563	529.4234	0	38.79211	176.5143
03/07/03	12:05:00	2290.597	11.08887	0	612.7563	529.4234	0	39.85208	166.712
03/07/03	12:06:00	2290.597	11.08887	0	612.7563	529.4234	0	39.85208	164.3958
03/07/03	12:07:00	2290.597	11.08887	0	612.7563	529.4234	0	39.85208	162.6166
03/07/03	12:08:00	2293.967	11.08887	0	612.7563	529.4234	0	39.77001	155.1306
03/07/03	12:09:00	2293.967	11.28418	0	612.7563	529.4234	0	39.77001	160.7703
03/07/03	12:10:00	2331.8	11.08276	0	612.7563	529.4234	0	40.85275	160.5688
03/07/03	12:11:00	2296.04	10.78369	0	612.7563	529.4234	0	40.85275	160.7703
03/07/03	12:12:00	2298.664	11.19263	0	612.7563	529.4234	0	40.85275	162.6166
03/07/03	12:13:00	2262.849	10.98511	0	612.7563	529.4234	0	41.88343	174.4665
03/07/03	12:14:00	2298.849	10.98511	0	612.7563	529.4234	0	41.88343	177.3535
03/07/03	12:15:00	2258.599	10.78369	0	612.7563	529.4234	0	40.84449	183.4967
03/07/03	12:16:00	2258.599	10.99121	0	612.7563	529.4234	0	40.84449	185.9473
03/07/03	12:17:00	2259.41	10.99121	0	612.7563	529.4234	0	39.80959	179.6698

DATE	TIME	MAJI007 Generator Megawatts MW	MAJI008 Generator Megavars MVAR	NAJT101 13.8 kv NAA01 Gen Aux Load MW	NAJT201 13.8 kv NAA02 Gen Aux Load MW	AEFI135 FW Flow Comp. KPPH	AEFI131 SH Spray Flow KPPH	FDFI002 Sootblower Steam Flow KPPH	FDFI022 SCR Sootblower Stm Flow KPPH	AAFY018A Cont. Blowdown Flow PCT	FBFI021 MS to Aux Stm. Flow KPPH	AETE137 Feedwater Temp. DEG F	AAPTOO6 Selected Drum Pressure PSIG	FDPT002 Sootblower Steam Pressure PSIG	FDTT002 Sootblower Steam Temp. DEG F	FDPT022 A.H. Sootblower Stm. Press PSIG	FDTT022 SCR/AH Sootblower Stm Temp DEG F	ABPIOO7 Turbine Throttle Pressure PSIG	ABTE008 Main Stm Temp DEG F	AEFI111 Reheater Spray Flow KPPH	ABPI010 Cold Reheat Stm Press PSIG	ABTE016 Cold Reheat Temp DEG F
03/07/03	12:18:00	216.03394	5.853279591	14.2895498	7.8900142	1309.85791	175.7713	0	1.9952712	0	0	363.7297	2482.0859	316.40622	639.70947	379.57761	803.58887	2385.681	986.1655	0	355.98053	564.3542
03/07/03	12:19:00	216.03394	5.853279591	14.2895498	7.8900142	1279.309448	145.767	0	1.9952712	0	0	363.7297	2482.0859	316.40622	639.70947	379.57761	803.58887	2389.343	974.6974	0	355.98053	564.3542
03/07/03	12:20:00	216.03394	5.853279591	14.2895498	7.8900142	1309.61731	141.9829	0	1.9952712	0	0	363.7297	2482.0859	316.40622	639.70947	379.57761	803.58887	2396.667	976.8752	0	355.98053	564.3542
03/07/03	12:21:00	216.03394	5.853279591	14.2895498	7.8900142	1309.61731	141.9829	0	1.9952712	0	0	363.7297	2482.0859	316.40622	639.70947	379.57761	803.58887	2389.343	983.3979	0	355.98053	564.3542
03/07/03	12:22:00	216.03394	5.853279591	14.2895498	7.8900142	1279.335815	180.265	0	1.9952712	0	0	363.7297	2482.0859	316.40622	639.70947	379.57761	803.58887	2403.992	988.2706	0	355.98053	564.3542
03/07/03	12:23:00	216.03394	5.853279591	14.2895498	7.9998784	1279.335815	174.3281	0	1.9952712	0	0	363.7297	2482.0859	316.40622	639.70947	379.57761	803.58887	2407.654	980.0861	0	355.98053	564.3542
03/07/03	12:24:00	216.03394	13.11642551	14.2895498	7.6519771	1279.335815	145.0632	0	1.9952712	0	0	363.7297	2482.0859	316.40622	639.70947	379.57761	803.58887	2411.316	970.2858	0	355.98053	564.3542
03/07/03	12:25:00	216.03394	13.11642551	14.2895498	7.9907227	1310.805054	140.9412	0	1.9952712	0	0	363.7297	2482.0859	316.40622	639.70947	379.57761	803.58887	2407.654	976.7998	0	355.98053	564.3542
03/07/03	12:26:00	216.03394	13.11642551	14.2895498	7.9907227	1310.805054	140.9412	0	1.9952712	0	0	363.7297	2482.0859	316.40622	639.70947	379.57761	803.58887	2418.64	981.6859	0	355.98053	564.3542
03/07/03	12:27:00	216.03394	13.11642551	14.2895498	7.9907227	1343.783691	140.9412	0	1.9952712	0	0	363.7297	2482.0859	316.40622	639.70947	379.57761	803.58887	2411.316	983.3195	0	355.98053	564.3542
03/07/03	12:28:00	216.03394	13.11642551	14.2895498	7.7709966	1343.783691	167.8059	0	1.9952712	0	0	363.7297	2482.0859	316.40622	639.70947	379.57761	803.58887	2411.316	984.9196	0	355.98053	564.3542
03/07/03	12:29:00	216.03394	13.11642551	14.2895498	8.0822754	1313.161621	153.9345	0	1.9952712	0	0	363.7297	2482.0859	316.40622	639.70947	379.57761	803.58887	2407.654	980.0076	0	355.98053	564.3542
03/07/03	12:30:00	216.03394	13.11642551	14.2895498	8.0822754	1345.491943	140.9412	0	1.9952712	0	0	363.7297	2482.0859	316.40622	639.70947	379.57761	803.58887	2403.992	971.8072	0	355.98053	564.3542
03/07/03	12:31:00	216.03394	13.11642551	14.2895498	7.7160635	1345.491943	140.9412	0	1.9952712	0	0	363.7297	2482.0859	316.40622	639.70947	379.57761	803.58887	2400.33	973.4404	0	355.98053	564.3542
03/07/03	12:32:00	216.03394	13.11642551	14.2895498	7.7252188	1377.361694	137.0027	0	1.9952712	0	0	363.7297	2482.0859	316.40622	639.70947	379.57761	803.58887	2389.343	976.6848	0	355.98053	564.3542
03/07/03	12:33:00	216.03394	13.11642551	14.2895498	7.7801518	1337.294434	140.7918	0	1.9952712	0	0	363.7297	2482.0859	316.40622	639.70947	379.57761	803.58887	2393.005	981.5852	0	355.98053	564.3542
03/07/03	12:34:00	216.03394	13.11642551	14.2895498	7.7801518	1306.748657	144.6272	0	1.9952712	0	0	363.7297	2482.0859	316.40622	639.70947	379.57761	803.58887	2389.343	983.2075	0	355.98053	564.3542
03/07/03	12:35:00	216.03394	13.11642551	14.2895498	7.7801518	1306.748657	174.4459	0	1.9952712	0	0	363.7297	2482.0859	316.40622	639.70947	379.57761	803.58887	2396.667	986.4636	0	355.98053	564.3542
03/07/03	12:36:00	216.03394	13.11642551	14.2895498	7.7801518	1306.748657	155.0247	0	1.9952712	0	0	363.7297	2482.0859	316.40622	639.70947	379.57761	803.58887	2393.005	975.0178	0	355.98053	564.3542
03/07/03	12:37:00	216.03394	13.11642551	14.2895498	7.7801518	1306.748657	140.3425	0	1.9952712	0	0	363.7297	2482.0859	316.40622	639.70947	379.57761	803.58887	2393.005	973.3732	0	355.98053	564.3542
03/07/03	12:38:00	216.03394	13.11642551	14.2895498	7.9724116	1306.246582	148.2215	0	1.9952712	0	0	363.7297	2482.0859	316.40622	639.70947	379.57761	803.58887	2389.343	981.5292	0	355.98053	564.3542
03/07/03	12:39:00	216.03394	13.11642551	14.2895498	7.6519771	1306.246582	176.7268	0	1.9952712	0	0	363.7297	2482.0859	316.40622	639.70947	379.57761	803.58887	2393.005	988.0638	0	355.98053	564.3542
03/07/03	12:40:00	216.03394	13.11642551	14.2895498	7.6885986	1306.246582	176.7268	0	1.9952712	0	0	363.7297	2482.0859	316.40622	639.70947	379.57761	803.58887	2396.667	981.4955	0	355.98053	564.3542
03/07/03	12:41:00	216.03394	13.11642551	14.2895498	7.9632564	1306.246582	148.7885	0	1.9952712	0	0	363.7297	2482.0859	316.40622	639.70947	379.57761	803.58887	2396.667	973.3284	0	355.98053	564.3542
03/07/03	12:42:00	216.03394	13.11642551	14.2895498	7.4871817	1306.246582	144.3357	0	1.9952712	0	0	363.7297	2482.0859	316.40622	639.70947	379.57761	803.58887	2396.667	978.2286	0	355.98053	564.3542
03/07/03	12:43:00	216.03394	13.11642551	14.2895498	8.0090342	1337.316406	144.3357	0	1.9952712	0	0	363.7297	2482.0859	316.40622	639.70947	379.57761	803.58887	2396.667	984.8076	0	355.98053	564.3542
03/07/03	12:44:00	216.03394	13.11642551	14.2895498	7.5054927	1301.276245	179.6801	0	1.9952712	0	0	363.7297	2482.0859	316.40622	639.70947	379.57761	803.58887	2404.907	986.1535	0	355.98053	564.3542
03/07/03	12:45:00	216.03394	13.11642551	14.2895498	7.4871817	1301.276245	171.5282	0	1.9952712	0	0	363.7297	2482.0859	316.40622	639.70947	379.57761	803.58887	2404.907	981.7421	0	355.98053	564.3542
03/07/03	12:46:00	216.03394	13.11642551	14.2895498	7.9266362	1301.276245	147.2239	0	1.9952712	0	0	363.7297	2482.0859	316.40622	639.70947	379.57761	803.58887	2404.907	973.6421	0	355.98053	564.3542
03/07/03	12:47:00	216.03394	13.11642551	14.262084	7.9174805	1331.446533	147.2239	0	1.9952712	0	0	363.7297	2482.0859	316.40622	639.70947	379.57761	803.58887	2408.569	980.2542	0	355.98053	564.3542
03/07/03	12:48:00	216.03394	13.11642551	14.262084	7.9174805	1331.446533	165.7865	0	1.9952712	0	0	363.7297	2482.0859	316.40622	639.70947	379.57761	803.58887	2408.569	986.8333	0	355.98053	564.3542
03/07/03	12:49:00	216.03394	13.11642551	14.262084	7.9541006	1296.698608	180.0313	0	1.9952712	0	0	363.7297	2482.0859	316.40622	639.70947	379.57761	803.58887	2412.231	986.8557	0	355.98053	564.3542
03/07/03	12:50:00	216.03394	13.11642551	14.262084	8.1280518	1296.698608	148.9299	0	1.9952712	0	0	363.7297	2482.0859	316.40622	639.70947	379.57761	803.58887	2412.231	973.7988	0	355.98053	564.3542
03/07/03	12:51:00	216.03394	13.11642551	14.262084	7.633666	1296.698608	148.9299	0	1.9952712	0	0	363.7297	2482.0859	316.40622	639.70947	379.57761	803.58887	2404.907	973.7876	0	355.98053	564.3542
03/07/03	12:52:00	216.03394	13.11642551	14.262084	8.0639648	1329.40979	144.6272	0	1.9952712	0	0	363.7297	2482.0859	316.40622	639.70947	379.57761	803.58887	2401.245	978.6429	0	355.98053	564.3542
03/07/03	12:53:00	216.03394	13.11642551	14.262084	7.6428213	1359.987061	144.6272	0	1.9952712	0	0	363.7297	2482.0859	316.40622	639.70947	379.57761	803.58887	2397.583	981.8652	0	355.98053	564.3542
03/07/03	12:54:00	216.03394	13.11642551	14.262084	8.0181875	1327.157104	149.9161	0	1.9952712	0	0	363.7297	2482.0859	316.40622	639.70947	379.57761	803.58887	2393.921	983.4988	0	355.98053	564.3542
03/07/03	12:55:00	216.03394	13.11642551	14.262084	8.0548096	1296.097656	176.7268	0	1.9952712	0	0	363.7297	2482.0859	316.40622	639.70947	379.57761	803.58887	2393.921	985.1099	0	355.98053	564.3542
03/07/03	12:56:00	216.03394	13.11642551	14.262084	8.0548096	1296.097656	162.192	0	1.9952712	0	0	363.7297	2482.0859	316.40622	639.70947	379.57761	803.58887	2390.259	978.5198	0	355.98053	564.3542
03/07/03	12:57:00	216.03394	13.11642551	14.262084	7.6611323	1296.097656	148.5052	0	1.9952712	0	0	363.7297	2482.0859	316.40622	639.70947	379.57761	803.58887	2393.921	971.9639	0	355.98053	564.3542
03/07/03	12:58:00	216.03394	13.11642551	14.262084	7.853394	1296.097656	148.5052	0	1.9952712	0	0	363.7297	2482.0859	316.40622	639.70947	379.57761	803.58887	2390.259	979.0194	0	355.98053	564.3542
03/07/03	12:59:00	216.03394	13.11642551	14.262084	7.853394	1296.097656	148.5052	0	1.9952712	0	0	363.7297	2482.0859	316.40622	639.70947	379.57761	803.58887	2393.921	983.92	0	355.98053	564.3542
03/07/03	13:00:00	216.03394	13.11642551	14.262084	8.0456543	1296.097656	178.6226	0	1.9952712	0	0	363.7297	2482.0859	316.40622	639.70947	379.57761	803.58887	2397.583	987.1873	0	355.98053	564.3542
03/07/03	13:01:00	216.03394	13.11642551	14.262084	8.0181875	1296.097656	159.9703	0	1.9952712	0	0	363.7297	2482.0859	316.40622	639.70947	379.57761	803.58887	2401.245	977.386	0	355.98053	564.3542
03/07/03	13:02:00	216.03394	13.11642551	14.262084	7.7343745	1296.097656	152.0079	0	1.9952712	0	0	363.7297	2482.0859	316.40622	639.70947	379.57761	803.58887	2401.245	974.1192	0	355.98053	564.3542
03/07/03	13:03:00	216.03394	13.11642551	14.262084	7.7893057	1296.097656	152.0079	0	1.9952712	0	0	363.7297	2482.0859	316.40622	639.70947	379.57761	803.58887	2401.245	982.8087	0	355.98053	564.3542
03/07/03	13:04:00	216.03394	13.11642551	14.262084	7.7893057	1328.108276	174.3281	0	1.9952712	0	0	363.7297	2482.0859	316.40622	639.70947	379.57761	803.58887	2401.245	986.0647	0	355.98053	564.3542
03/07/03	13:05:00	216.03394	20.37961197	14.262084	8.1555176	1297.081055	170.2964	0	1.9952712	0	0	363.7297	2482.0859	316.40622	639.70947	379.57761	803.58887	2401.245	979.5079	0	355.98053	564.3542
03/07/03	13:06:00	216.03394	20.37961197	14.262084	7.9266362	1297.081055	151.5918	0	1.9952712	0	0	363.7297	2482.0859	316.40622	639.70947	379.57761	803.58887	2397.583	974.5742	0	355.98053	564.3542
03/07/03	13:07:00	216.03394	20.37961197	14.262084	7.7160635	1328.407104	147.0808	0	1.9952712	0	0	363.7297	2482.0859	316.40622	639.70947	379.57761	803.58887	2401.245	981.0742	0	355.98053	564.3542
03/07/03	13:08:00	216.03394	20.37961197	14.262084	8.1097403	1328.407104	147.0808	0	1.9952712	0	0	363.7297	2482.0859	316.40622	639.70947	379.57761	803.58887	2397.583	984.3077	0	355.98053	564.3542
03/07/03	13:09:00	216.03394	20.37961197	14.262084	7.7526855	1328.407104	174.5695	0	1.9952712	0	0	363.7297	2482.0859	316.40622	639.70947	379.57761	803.58887	2401.245	985.9302	0	355.98053	564.3542
03/07/03	13:10:00	216.03394	20.37961197	14.262084	8.1555176	1298.312622	161.672	0	1.9952712	0	0	363.7297	2482.0859	316.40622	639.70947	379.57761	803.58887	2397.583	977.7513	0	355.98053	564.3542
03/07/03	13:11:00	216.03394	20.37961197	14.262084	7.7801518	1298.312622	147.5096	0	1.9952712	0	0	363.7297	2482.0859	316.40622	639.70947	379.57761	803.58887	2401.245	971.2178	0	355.98053	564.3542
03/07/03	13:12:00	216.03394	20.37961197	14.262084	8.100585	1329.318848	143.6046	0	1.9952712	0	0	363.7297	2482.0859	316.40622	639.70947	379.57761	803.58887	2397.583	979.3735	0	355.98053	564.3542
03/07/03	13:13:00	216.03394	20.37961197	14.262084	7.8717031	1329.318848	147.7948	0	1.9952712	0	0	363.7297	2482.0859	316.40622	639.70947	379.57761	803.58887	2397.583	985.9078	0	355.98053	564.3542
03/07/03	13:14:00	216.03394	20.37961197	14.262084	7.853394	1295.971436	179.9143	0	1.9952712	0	0	363.7297	2482.0859	316.40622	639.70947	379.57761	803.58887	2401.245	985.9078	0	355.98053	564.3542
03/07/03	13:15:00	216.03394	20.37961197	14.262084	7.853394	1295.971436	158.1172	0	1.9952712	0	0	363.7297	2482.0859	316.40622	639.70947	379.57761	803.58887	2401.245	976.0955	0	355.98053	564.3542
03/07/03	13:16:00	216.03394	20.37961197	14.262084	8.1280518	1328.179443	147.5096	0	1.9952712	0	0	363.7297	2482.0859	316.40622	639.70947	379.57761	803.58887	2401.245	974.4734	0	355.98053	564.3542
03/07/03	13:17:00	216.03394	20.37961197	14.262084	8.1280518	1328.179443	143.6046	0	1.9952712	0	0	363.7297	2482.0859	316.40622	639.70947	379.57761	803.58887	2396.667	982.6295	0	355.98053	564.3542
03/07/03	13:18:00	216.03394	20.37961197	14.262084	8.0731201	1296.896118	184.5354	0	1.9952712	0	0	363.7297	2482.0859	316.40622	639.70947	379.57761	803.58887	2400.33	987.5192	0	355.98053	564.3542
03/07/03	13:19:00	216.03394	20.37961197	14.262084	7.7069082	1296.896118	180.0313	0	1.9952712	0	0	363.7297	2482.0859	316.40622	639.70947	379.57761	803.58887	2400.33	982.6183	0	355.98053	564.3542
03/07/03	13:20:00	216.03394	20.37961197	14.262084	7.835083	1296.896118	153.7977	0	1.9952712	0	0	363.7297	2482.0859	316.40622	639.70947	379.57761	803.58887	2400.33	974.451	0	355.98053	564.3542
03/07/03	13:21:00	216.03394	20.37961197	14.262084	7.9357901	1296.896118	153.7977	0	1.9952712	0	0	363.7297	2482.0859	316.40622	639.70947	379.57761	803.58887	2400.33	977.7065	0	355.98053	564.3542
03/07/03	13:22:00	216.03394	20.37961197	14.5733633	7.9357901	1327.929932	149.635	0	1.9952712	0	0	363.7297	2482.0859	316.40622	639.70947	379.57761	803.58887	2400.33	985.8743	0	355.98053	564.3542
03/07/03	13:23:00	216.03394	20.37961197	14.5733633	7.8076167	1293.118652	185.4457	0	1.9952712	0	0	363.7297	2482.0859	316.40622	639.70947	379.57761	803.58887	2400.33	987.5079	0	355.98053	564.3542
03/07/03	13:24:00	216.03394	20.37961197	14.2712393	8.100585	1293.118652	160.1019	0	1.9952712	0	0	363.7297	2482.0859	316.40622	639.70947	379.57761	803.58887	2400.33	975.5063	0	355.98053	564.3542
03/07/03	13:25:00	216.03394	20.37961197	14.2712393	7.5604239	1293.118652	149.4942	0	1.9952712	0	0	363.7297	2482.0859	316.40622	639.70947	379.57761	803.58887	2403.992	972.2396	0	355.98053	564.3542
03/07/03	13:26:00	216.03394	20.37961197	14.2712393	8.1829824	1323.357788	145.6425	0	1.9952712	0	0	363.7297	2482.0859	316.40622	639.70947	379.57761	803.58887	2403.992	980.4066	0	355.98053	564.3542

DATE	TIME	ABPT024 Hot Reheat Pressure PSIG	ABTE022 Hot Reheat Temp DEG F	AETE119 BFP Hdr Discharge Temp DEG F	AETE130 FW Htr #7 Outlet Temp DEG F	AETE035 FW Htr #7 Casc Drain Temp DEG F	AFPT026 Cold Reheat Ext Hdr Press PSIG	AFTE027 Cold Reheat Ext Hdr Temp DEG F	AFTI017 HP Aux Steam Temp DEG F	AFFI017 Spray Flow to HP Aux Steam KPPH	AETE055 BFBP Discharge Hdr Temp DEG F	AFPY044A DA Pegging Stm Valve PCT	ASFI006 Caulkins LP Stm Flow Output KPPH	ASFI016 Caulkins HP Stm Flow Output KPPH	MAJI002 Unit Megavars MVAR	MAJI004 Unit Megawatts MW	ADPT003C Absolute Cond Vac Calculated IN HGA	DALT004A Cooling Twr Basin Level IN	DAFI027 Cooling Twr Blow-Down Flow GPM	EAFI034 Cooling Twr Blow-Down SDA GPM	DATE014A Water Box Inlet A Temp DEG F	DATE014B Water Box Inlet B Temp DEG F	DATE016A Water Box Outlet A Temp DEG F
03/07/03	12:18:00	325.8667	927.9199	365.0928	360.9864	281.19495	37.170406	283.47711	387.3723	0	254.8895	0	107.511917	15.7217989	-5.0659227	217.25464	2.2180176	57.231445	0	185.14967	82.773331	82.05986	96.22718
03/07/03	12:19:00	325.8667	927.9199	365.0928	360.9864	281.19495	37.170406	283.47711	387.3723	0	254.8895	0	107.511917	15.9306631	-5.0659227	217.25464	2.2180176	57.231445	0	201.21863	82.773331	82.05986	96.22718
03/07/03	12:20:00	325.8667	927.9199	365.0928	360.9864	281.19495	37.170406	283.47711	387.3723	0	254.8895	0	107.511917	15.9306631	-5.0659227	217.25464	2.2180176	57.231445	0	211.11902	82.773331	82.05986	96.22718
03/07/03	12:21:00	325.8667	929.519	365.0928	360.9864	281.19495	37.170406	283.47711	387.3723	0	254.8895	0	116.419067	15.9306631	-5.0659227	217.25464	2.2180176	57.231445	0	221	82.773331	82.05986	96.22718
03/07/03	12:22:00	325.8667	929.519	365.0928	360.9864	281.19495	37.170406	283.47711	387.3723	0	254.8895	0	116.419067	15.9306631	-5.0659227	217.25464	2.2180176	57.231445	0	227.64674	82.773331	82.05986	96.22718
03/07/03	12:23:00	325.8667	929.4741	365.0928	360.9864	281.19495	37.170406	283.47711	387.3723	0	254.8895	0	113.833298	15.9306631	-5.0659227	217.25464	2.2180176	57.231445	0	234.17108	82.773331	81.824829	96.22718
03/07/03	12:24:00	325.8667	929.4741	365.0928	360.9864	281.19495	37.170406	283.47711	387.3723	0	254.8895	0	111.411362	15.9306631	-5.0659227	217.25464	2.2180176	57.231445	0	237.43181	81.810135	81.810135	96.22718
03/07/03	12:25:00	325.8667	927.8079	365.0928	360.9864	281.19495	37.170406	283.47711	387.3723	0	254.8895	0	111.411362	15.9321985	-5.0659227	222.44261	2.2180176	57.231445	0	237.43181	83.207603	81.810135	96.22718
03/07/03	12:26:00	325.8667	927.8079	365.0928	360.9864	281.19495	37.170406	283.47711	387.3723	0	254.8895	0	111.411362	15.9321985	-5.0659227	222.44261	2.2180176	57.231445	0	243.88629	83.178246	81.810135	96.22718
03/07/03	12:27:00	325.8667	927.8079	365.0928	360.9864	281.19495	37.170406	283.47711	387.3723	0	254.8895	0	111.411362	15.9321985	-5.0659227	222.44261	2.2180176	57.231445	0	247.20876	83.148918	83.148918	96.22718
03/07/03	12:28:00	325.8667	927.8079	365.0928	360.9864	281.19495	37.170406	283.47711	387.3723	0	254.8895	0	111.411362	15.9321985	-5.0659227	222.44261	2.2180176	57.231445	0	243.95061	83.134239	81.722	96.22718
03/07/03	12:29:00	325.8667	927.8079	365.0928	360.9864	281.19495	37.170406	283.47711	387.3723	0	254.8895	0	111.411362	15.9321985	-5.0659227	222.44261	2.2180176	57.231445	0	234.17108	81.692596	81.722	96.22718
03/07/03	12:30:00	325.8667	926.0857	365.0928	360.9864	281.19495	37.170406	283.47711	387.3723	0	254.8895	0	111.411362	15.9321985	-5.0659227	222.44261	2.2180176	57.231445	0	227.71568	83.104919	81.677948	96.22718
03/07/03	12:31:00	325.8667	924.453	365.0928	360.9864	281.19495	37.170406	283.47711	387.3723	0	254.8895	0	111.411362	15.9321985	-5.0659227	222.44261	2.2180176	57.231445	0	224.38307	83.090233	81.663254	96.22718
03/07/03	12:32:00	325.8667	924.453	365.0928	360.9864	281.19495	37.170406	283.47711	387.3723	0	254.8895	0	111.411362	15.9321985	-5.0659227	222.44261	2.2180176	57.231445	0	224.38307	83.075554	81.648552	96.22718
03/07/03	12:33:00	325.8667	924.453	365.0928	360.9864	281.19495	37.170406	283.47711	387.3723	0	254.8895	0	117.712303	15.9321985	-5.0659227	217.40721	2.2180176	57.231445	0	224.38307	83.046234	81.648552	96.22718
03/07/03	12:34:00	325.8667	926.0408	359.932	360.9864	281.19495	37.170406	283.47711	387.3723	0	254.8895	0	117.712303	15.4778337	-5.0659227	217.40721	2.2180176	57.231445	0	224.38307	81.6045	81.619202	96.22718
03/07/03	12:35:00	325.8667	926.0408	359.932	361.1158	281.19495	37.170406	283.47711	387.3723	0	254.8895	0	110.622269	15.9372129	-5.0659227	217.40721	2.2180176	57.231445	0	227.64674	81.58979	81.619202	96.22718
03/07/03	12:36:00	325.8667	927.6735	359.932	361.1158	281.19495	37.170406	283.47711	387.3723	0	254.8895	0	110.622269	15.9372129	-5.0659227	217.40721	2.2180176	57.231445	0	237.43181	81.57515	81.619202	96.22718
03/07/03	12:37:00	325.8667	927.6735	359.932	361.1158	281.19495	37.170406	283.47711	387.3723	0	254.8895	0	113.049065	15.8473921	-5.0659227	217.40721	2.2180176	57.231445	0	240.71336	81.57515	81.619202	96.22718
03/07/03	12:38:00	325.8667	929.2838	359.932	361.1158	281.19495	37.170406	283.47711	387.3723	0	254.8895	0	111.048012	16.0710106	-5.0659227	217.40721	2.2180176	57.231445	0	243.95061	82.987579	82.9729	96.22718
03/07/03	12:39:00	325.8667	930.9055	359.932	361.1158	281.19495	37.170406	283.47711	387.3723	0	254.8895	0	111.048012	16.0710106	-5.0659227	217.40721	2.2180176	57.231445	0	247.20876	82.958199	81.545799	96.22718
03/07/03	12:40:00	325.8667	930.9055	359.932	361.1158	281.19495	37.170406	283.47711	387.3723	0	254.8895	0	111.048012	15.9773016	-5.0659227	217.40721	2.2180176	57.231445	0	253.66083	81.501732	81.545799	96.22718
03/07/03	12:41:00	325.8667	930.9055	359.932	361.1158	281.19495	37.170406	283.47711	387.3723	0	254.8895	0	111.048012	15.9773016	-5.0659227	217.40721	2.2180176	57.231445	0	260.25372	82.943573	81.545799	96.22718
03/07/03	12:42:00	325.8667	929.2279	359.932	361.1158	281.19495	37.170406	283.47711	387.3723	0	254.8895	0	111.048012	15.8003778	-5.0659227	217.40721	2.2180176	57.231445	0	263.54761	82.928932	81.545799	96.22718
03/07/03	12:43:00	325.8667	929.2279	359.932	361.1158	281.19495	37.170406	283.47711	387.3723	0	254.8895	0	117.728722	15.8226213	-5.0659227	217.40721	2.2180176	57.231445	0	270.13055	81.545914	81.545799	96.22718
03/07/03	12:44:00	325.8667	930.4508	359.932	361.1158	281.19495	37.170406	283.47711	387.3723	0	254.8895	0	117.728722	15.7564449	-5.0659227	217.40721	2.2180176	57.231445	0	270.13055	81.545914	81.545799	96.22718
03/07/03	12:45:00	325.8667	930.4508	359.932	361.1158	281.19495	37.170406	283.47711	387.3723	0	254.8895	0	112.480591	15.7564449	-5.0659227	217.40721	2.2180176	57.231445	0	270.13055	81.081833	81.545799	94.659096
03/07/03	12:46:00	325.8667	930.4508	359.932	361.1158	281.19495	37.170406	283.47711	387.3723	0	254.8895	0	112.480591	16.237627	-5.0659227	217.40721	2.2180176	57.231445	0	270.13055	81.081833	81.545799	96.102242
03/07/03	12:47:00	325.8667	930.4508	359.932	361.1158	281.19495	37.170406	283.47711	387.3723	0	254.8895	0	112.480591	16.237627	-5.0659227	217.40721	2.2180176	57.231445	0	266.85947	82.133492	81.419701	96.102242
03/07/03	12:48:00	325.8667	930.4508	359.932	361.1158	281.19495	37.170406	283.47711	387.3723	0	254.8895	0	110.449699	15.8356009	-5.0659227	217.40721	2.2180176	57.231445	0	273.30496	82.206833	81.49308	96.102242
03/07/03	12:49:00	325.8667	930.4508	359.932	361.1158	281.19495	37.170406	283.47711	387.3723	0	254.8895	0	110.449699	15.780736	-5.0659227	217.40721	2.2180176	57.231445	0	276.55624	82.206833	81.5224	96.102242
03/07/03	12:50:00	325.8667	929.165	359.932	361.1158	281.19495	37.170406	283.47711	387.3723	0	254.8895	0	110.449699	16.0120239	-5.0659227	217.40721	2.2180176	57.231445	0	276.55624	82.236145	81.5224	96.102242
03/07/03	12:51:00	325.8667	927.5099	359.932	361.1158	281.19495	37.170406	283.47711	387.3723	0	254.8895	0	115.075974	16.5497437	-5.0659227	217.40721	2.2180176	57.231445	0	276.55624	82.236107	81.5224	96.102242
03/07/03	12:52:00	325.8667	927.5099	359.932	361.1158	281.19495	37.170406	283.47711	387.3723	0	254.8895	0	115.075974	16.0438709	-5.0659227	217.40721	2.2180176	57.231445	0	279.76959	82.236107	82.934792	96.102242
03/07/03	12:53:00	325.8667	927.5099	359.932	361.1158	281.19495	37.170406	283.47711	387.3723	0	254.8895	0	115.075974	15.9616947	-5.0659227	217.40721	2.2180176	57.231445	0	283.00177	82.236107	82.890785	96.102242
03/07/03	12:54:00	325.8667	927.5099	359.932	361.1158	281.19495	37.170406	283.47711	387.3723	0	254.8895	0	115.075974	15.8842487	-5.0659227	217.40721	2.2180176	57.231445	0	286.30682	82.236107	82.890785	96.102242
03/07/03	12:55:00	325.8667	926.2983	359.932	361.1158	281.19495	37.170406	283.47711	387.3723	0	254.8895	0	115.075974	15.8842487	-5.0659227	217.40721	2.2180176	57.231445	0	286.30682	82.118591	82.890785	96.102242
03/07/03	12:56:00	325.8667	926.2983	359.932	361.1158	281.19495	37.170406	283.47711	387.3723	0	254.8895	0	110.467216	15.9524794	-5.0659227	217.40721	2.2180176	57.231445	0	286.30682	83.501106	82.890785	96.102242
03/07/03	12:57:00	325.8667	926.2983	359.932	361.1158	281.19495	37.170406	283.47711	387.3723	0	254.8895	0	110.467216	16.1374645	-5.0659227	217.40721	2.2180176	57.231445	0	286.30682	82.05986	82.890785	96.102242
03/07/03	12:58:00	325.8667	927.8526	359.932	361.1158	281.19495	37.170406	283.47711	387.3723	0	254.8895	0	110.467216	16.0415568	-5.0659227	217.40721	2.2180176	57.231445	0	289.51993	82.001114	82.890785	96.102242
03/07/03	12:59:00	325.8667	927.8526	359.932	361.1158	281.19495	37.170406	283.47711	387.3723	0	254.8895	0	110.467216	16.0945797	-5.0659227	217.40721	2.2180176	57.231445	0	292.75119	81.986435	82.729248	96.102242
03/07/03	13:00:00	325.8667	929.4853	359.932	361.1158	281.19495	37.170406	283.47711	387.3723	0	254.8895	0	110.467216	16.0945797	-5.0659227	217.40721	2.2180176	57.231445	0	292.75119	81.957054	82.729248	96.102242
03/07/03	13:01:00	325.8667	927.8526	359.932	361.1158	281.19495	37.170406	283.47711	387.3723	0	254.8895	0	116.603867	16.0945797	5.00487566	217.40721	2.2180176	57.231445	0	292.75119	81.927673	82.729248	96.102242
03/07/03	13:02:00	325.8667	927.8526	359.932	361.1158	281.19495	37.170406	283.47711	387.3723	0	254.8895	0	116.603867	16.2345028	5.00487566	217.40721	2.2180176	57.231445	0	296	83.35434	82.729248	96.102242
03/07/03	13:03:00	325.8667	929.4741	359.932	361.1158	281.19495	37.170406	283.47711	387.3723	0	254.8895	0	116.603867	16.6849556	5.00487566	217.40721	2.2180176	57.231445	0	296	83.310364	82.729248	96.102242
03/07/03	13:04:00	325.8667	929.4741	359.932	361.1158	281.19495	37.170406	283.47711	387.3723	0	254.8895	0	113.936523	15.9042873	5.00487566	217.40721	2.2180176	57.231445	0	299.21341	83.310364	82.729248	96.102242
03/07/03	13:05:00	325.8667	929.4741	359.932	361.1158	281.19495	37.170406	283.47711	387.3723	0	254.8895	0	113.936523	15.9602861	5.00487566	217.40721	2.2180176	57.231445	0	302.49628	83.310364	82.729248	96.102242
03/07/03	13:06:00	325.8667	929.4741	359.932	361.1158	281.19495	37.170406	283.47711	387.3723	0	254.8895	0	113.936523	16.0510654	5.00487566	217.40721	2.2180176	57.231445	0	302.49628	83.310364	82.729248	96.102242
03/07/03	13:07:00	325.8667	929.4741	359.932	361.1158	281.19495	37.170406	283.47711	387.3723	0	254.8895	0	113.936523	16.0510654	5.00487566	217.40721	2.2180176	57.231445	0	305.74374	83.310364	82.729248	96.102242
03/07/03	13:08:00	325.8667	928.2514	359.932	361.1158	281.19495	37.170406	283.47711	387.3723	0	254.8895	0	113.936523	16.0510654	5.00487566	217.40721	2.2180176	57.231445	0	305.74374	83.310364	82.729248	96.102242
03/07/03	13:09:00	325.8667	928.2514	359.932	361.1158	281.19495	37.170406	283.47711	387.3723	0	254.8895	0	113.936523	15.8618479	5.00487566	217.40721	2.2180176	57.231445	0	305.74374	83.310364	82.729248	96.102242
03/07/03	13:10:00	325.8667	928.2514	359.932	361.1158	281.19495	37.170406	283.47711	387.3723	0	254.8895	0	113.936523	16.289238	5.00487566	217.40721	2.2180176	57.231445	0	305.74374	83.310364	82.494354	96.102242
03/07/03	13:11:00	325.8667	926.5851	359.932	361.1158	281.19495	37.170406	283.47711	387.3723	0	254.8895	0	113.936523	16.289238	5.00487566	217.40721	2.2180176	57.231445	0	305.74374	83.310364	82.479713	96.102242
03/07/03	13:12:00	325.8667	926.5851	359.932	361.1158	281.19495	37.170406	283.47711	387.3723	0	254.8895	0	118.744408	15.8819256	5.00487566	217.40721	2.2180176	57.231445	0	305.74374	83.310364	82.479713	96.102242
03/07/03	13:13:00	325.8667	928.2066	359.932	361.1158	281.19495	37.170406	283.47711	387.3723	0	254.8895	0	118.744408	15.8819256	5.00487566	217.40721	2.2180176	57.231445	0	305.74374	83.310364	82.479713	96.102242
03/07/03	13:14:00	325.8667	928.2066	359.932	361.1158	281.19495	37.170406	283.47711	387.3723	0	254.8895	0	118.744408	15.8819256	5.00487566	217.40721	2.2180176	57.231445	0	305.74374	83.310364	82.479713	96.102242
03/07/03	13:15:00	325.8667	928.2066	359.932	361.1158	281.19495	37.170406	283.47711	387.3723	0	254.8895	0	114.356995	15.8819256	5.00487566	217.40721	2.2180176	57.231445	0	305.74374	83.310364	83.847229	96.102242
03/07/03	13:16:00	325.8667	928.2066	359.932	361.1158	281.19495	37.170406	283.47711	387.3723	0	254.8895	0	114.356995	15.9956436	5.00487566	217.40721	2.2180176	57.231445	0	309.00772	83.310364	83.83255	96.102242
03/07/03	13:17:00	325.8667	928.2066	359.932	361.1158	281.19495	37.170406	283.47711	387.3723	0	254.8895	0	114.356995	15.8795147	5.00487566	217.40721	2.2180176	57.231445	0	312.28766	83.310364	82.406311	96.102242
03/07/03	13:18:00	325.8667	929.8281	359.932	361.1158	281.19495	37.170406	283.47711	387.3723	0	254.8895	0	112.326874	15.8795147	5.00487566	217.40721	2.2180176	57.231445	0	322.16974	83.310364	82.406311	96.102242
03/07/03	13:19:00	325.8667	929.8281	359.932	361.1158	281.19495	37.170406	283.47711	387.3723	0	254.8895	0	112.326874	16.0799694	5.00487566	217.40721	2.2180176	57.231445	0	badbad	83.310364	82.376984	96.102242
03/07/03	13:20:00	325.8667	929.8281	359.932	361.1158	281.19495	37.170406	283.47711	387.3723	0	254.8895	0	118.964905	16.0799694	5.00487566	217.40721	2.2180176	57.231445	0	badbad	83.310364	82.376984	96.102242
03/07/03	13:21:00	325.8667	929.8281	359.932	361.1158	281.19495	37.170406	283.47711	387.3723	0	254.8895	0	118.964905	16.0799694	5.00487566	217.40721	2.2180176	57.231445	0	badbad	83.310364	82.362282	96.102242
03/07/03	13:22:00	325.8667	931.4384	359.932	361.1158	281.19495	37.170406	283.47711	387.3723	0	254.8895	0	118.964905	16.0799694	5.00487566	217.40721	2.2180176	57.231445	0	badbad	83.75927	82.362282	96.102242
03/07/03	13:23:00	325.8667	931.4384	359.932	361.1158	281.19495	37.170406	283.47711	387.3723	0	254.8895	0	114.796364	16.0773315	5.00487566	217.40721	2.2180176	57.231445	0	badbad	83.75927	82.332954	96.102242
03/07/03	13:24:00	325.8667	931.4384	359.932	361.1158	281.19495	37.170406	283.47711	387.3723	0	254.8895	0	114.796364	16.0773315	5.00487566	217.40721	2.2180176	57.231445	0	badbad	83.75927	82.332954	96.102242
03/07/03	13:25:00	325.8667	929.7721	359.932	361.1158	281.19495	37.170406	283.47711	387.3723	0	254.8895	0	114.796364	15.8772268	5.00487566	217.40721	2.2180176	57.231445	0	badbad	83.729958	82.303619	96.102242
03/07/03	13:26:00	325.8667	929.7721	359.932	361.1158	281.19495	37.170406	283.47711	387.3723	0	254.8895	0	114.796364	15.8892689	5.00487566	217.40721	2.2180176	57.231445	0	badbad	83.715286	82.303619	96.102242

DATE	TIME	DATE016B Water Box Outlet B Temp DEG F	ABFI018 Main Steam Flow KPPH	MBEL100 Excitation Losses KW	BATI013 AH Gas Outlet Temp DEG F	BAAI046 Excess Oxygen PCT	RMAT500 Relative Humidity PCT	BATI011 AH Air Inlet Temp DEG F	JCFT152 Coal Fdr A Flow Rate KPPH	JCFT252 Coal Fdr B Flow Rate KPPH	JCFT352 Coal Fdr C Flow Rate KPPH	JCFT452 Coal Fdr D Flow Rate KPPH	NAET102 13.8 Kv NAA01 Aux Scr Volts VOLTS	NAET202 13.8 Kv NAAO2 Aux Scr Volts VOLTS	NAIT101 13.8 Kv NAAO1 Aux Scr Current AMPS	NAIT201 13.8 Kv NAA02 Aux Scr Current AMPS	MAII006A Generator Arm Current Phase A KA	MAII006B Generator Arm Current Phase B KA	MAII006C Generator Arm Current Phase C KA	RMTT500 Ambient Temp DEG F	ADFI001 Cond Xfer Flow Calculated KPPH	ADLT001 Condenser Hotwell Level IN	TSTMFLO Total Stm Flow KPPH
03/07/03	12:18:00	96.32003	1397.297	579.931458	256.0473	3.790074	35.821533	106.4537	74.3158	0.0604249	74.55078	31.1792	14022.948	14253.6621	-0.0732576	-0.4394769	5.1699214	5.29687452	5.38476515	85.86426	137.3445	46.68457	1407.019
03/07/03	12:19:00	96.32003	1397.297	579.931458	256.0473	3.790074	33.502197	106.4537	76.59851	0.0604249	75.69214	28.2251	14022.948	14253.6621	-0.0732576	-0.4394769	5.1699214	5.29687452	5.38476515	85.86426	135.4314	46.68457	1407.019
03/07/03	12:20:00	96.32003	1397.297	579.931458	256.0473	3.77952	32.4646	106.4537	68.47473	0.0604249	68.50829	30.47425	14022.948	14253.6621	-0.0732576	-0.4394769	5.1699214	5.29687452	5.38476515	85.86426	135.1269	47.167965	1407.019
03/07/03	12:21:00	96.32003	1397.297	579.931458	256.0473	3.77952	31.335447	106.4537	75.12146	0.0604249	73.84582	30.67566	14022.948	14253.6621	-0.0732576	-0.4394769	5.1699214	5.29687452	5.38476515	87.39014	113.3513	47.167965	1407.019
03/07/03	12:22:00	96.32003	1397.297	579.931458	256.0473	3.528204	29.107664	106.4537	60.78735	0.0604249	64.17786	30.70923	14022.948	14253.6621	-0.0732576	-0.4394769	5.1699214	5.29687452	5.38476515	87.39014	114.0759	47.651367	1407.019
03/07/03	12:23:00	96.32003	1397.297	579.931458	256.0473	4.042392	25.659182	106.4537	66.8634	0.0604249	66.99768	31.24634	14022.948	14253.6621	-0.0732576	-0.4394769	5.1699214	5.29687452	5.38476515	87.39014	113.9554	47.651367	1407.019
03/07/03	12:24:00	96.32003	1397.297	579.931458	256.0473	4.042392	22.546387	106.4537	64.17786	0.0604249	63.77502	29.83643	14022.948	14253.6621	-0.0732576	-0.4394769	5.1699214	5.29687452	5.38476515	87.39014	120.5152	47.651367	1407.019
03/07/03	12:25:00	96.32003	1397.297	579.931458	256.0473	3.784148	22.546387	106.4537	67.6355	0.0604249	67.87048	30.30639	14022.948	14253.6621	-0.0732576	-0.4394769	5.1699214	5.29687452	5.38476515	87.39014	120.7429	47.651367	1407.019
03/07/03	12:26:00	96.32003	1397.297	579.931458	256.0473	3.784148	22.546387	106.4537	57.73254	0.0604249	58.94104	30.54138	14022.948	14253.6621	-0.0732576	-0.4394769	5.1699214	5.29687452	5.38476515	87.39014	115.749	47.651367	1407.019
03/07/03	12:27:00	96.32003	1397.297	579.931458	256.0473	4.302135	21.508789	106.4537	65.82275	0.0604249	65.35278	31.34704	14022.948	14253.6621	-0.0732576	-0.4394769	5.1699214	5.29687452	5.38476515	87.39014	119.7149	47.651367	1407.019
03/07/03	12:28:00	96.32003	1397.297	579.931458	256.0473	4.04797	18.334961	106.4537	66.09131	0.0604249	66.32629	30.97778	14022.948	14253.6621	-0.0732576	-0.4394769	5.1699214	5.29687452	5.38476515	87.39014	134.8217	47.167965	1407.019
03/07/03	12:29:00	96.32003	1397.297	579.931458	256.0473	4.04797	19.342041	106.4537	69.17969	0.0604249	68.30688	30.50781	14022.948	14253.6621	-0.0732576	-0.4394769	5.1699214	5.29687452	5.38476515	87.39014	135.1269	47.167965	1407.019
03/07/03	12:30:00	96.32003	1397.297	579.931458	256.0473	4.042958	20.349119	106.4537	68.67615	0.0604249	68.87756	30.7428	14022.948	14253.6621	-0.0732576	-0.4394769	5.1699214	5.29687452	5.38476515	87.39014	135.7353	47.167965	1407.019
03/07/03	12:31:00	96.32003	1397.297	579.931458	256.0473	4.042958	13.391113	106.4537	72.70446	0.0604249	72.73803	30.91064	14022.948	14253.6621	-0.0732576	-0.4394769	5.1699214	5.29687452	5.38476515	87.39014	135.9375	47.167965	1407.019
03/07/03	12:32:00	96.32003	1397.297	579.931458	256.0473	4.042958	14.428711	106.4537	77.20275	0.0604249	77.20275	31.04492	14022.948	14253.6621	-0.0732576	-0.4394769	5.1699214	5.29687452	5.38476515	87.39014	152.1453	46.68457	1407.019
03/07/03	12:33:00	96.32003	1397.297	579.931458	256.0473	3.780947	15.435791	106.4537	72.60376	0.0604249	72.57019	31.04492	14022.948	14253.6621	-0.0732576	-0.4394769	5.1699214	5.29687452	5.38476515	87.39014	158.3376	46.68457	1407.019
03/07/03	12:34:00	96.32003	1397.297	579.931458	256.0473	4.031754	16.534422	106.4537	72.60376	0.0604249	73.20801	30.37354	14022.948	14253.6621	-0.0732576	-0.4394769	5.1699214	5.29687452	5.38476515	87.39014	155.8902	46.68457	1375.296
03/07/03	12:35:00	96.32003	1397.297	579.931458	256.0473	4.031398	13.055418	106.4537	69.51538	0.0604249	69.24683	31.07849	14022.948	14253.6621	-0.0732576	-0.4394769	5.1699214	5.29687452	5.38476515	87.39014	156.511	46.68457	1375.296
03/07/03	12:36:00	96.32003	1397.297	579.931458	256.0473	4.031398	11.041258	106.4537	75.72571	0.0604249	75.52428	31.27991	14022.948	14253.6621	-0.0732576	-0.4394769	5.1699214	5.29687452	5.38476515	87.39014	158.8571	46.201168	1375.296
03/07/03	12:37:00	96.32003	1397.297	579.931458	256.0473	3.508689	11.041258	106.4537	72.46947	0.0604249	72.36877	29.87	14022.948	14253.6621	-0.0732576	-0.4394769	5.1699214	5.29687452	5.38476515	87.39014	156.5934	46.201168	1375.296
03/07/03	12:38:00	96.32003	1397.297	579.931458	256.0473	3.772589	11.041258	106.4537	75.79284	0.0604249	76.16211	30.20569	14022.948	14253.6621	-0.0732576	-0.4394769	5.1699214	5.29687452	5.38476515	87.39014	152.5559	46.201168	1375.296
03/07/03	12:39:00	96.32003	1397.297	579.931458	256.0473	3.772589	9.9121084	106.4537	68.77686	0.0604249	69.07897	30.44067	14022.948	14253.6621	-0.0732576	-0.4394769	5.1699214	5.29687452	5.38476515	87.39014	155.0953	46.201168	1375.296
03/07/03	12:40:00	96.32003	1397.297	579.931458	256.0473	4.023559	9.9121084	106.4537	70.69031	0.0604249	70.01892	30.70923	14022.948	14253.6621	-0.0732576	-0.4394769	5.1699214	5.29687452	5.38476515	87.39014	153.2246	46.201168	1375.296
03/07/03	12:41:00	96.32003	1397.297	579.931458	256.0473	4.023559	9.9121084	106.4537	73.57726	0.0604249	73.77869	30.27282	14022.948	14253.6621	-0.0732576	-0.4394769	5.1699214	5.29687452	5.38476515	87.39014	156.681	46.201168	1375.296
03/07/03	12:42:00	96.32003	1397.297	579.931458	256.0473	3.771882	6.5856915	106.4537	69.04541	0.0604249	68.44116	30.20569	14022.948	14253.6621	-0.0732576	-0.4394769	5.1699214	5.29687452	5.38476515	87.39014	153.7614	46.201168	1375.296
03/07/03	12:43:00	96.32003	1397.297	579.931458	256.0473	3.771882	7.6843262	106.4537	69.14612	0.0604249	68.97827	30.44067	14006.469	14253.6621	-0.0732576	-0.4394769	5.1699214	5.29687452	5.38476515	87.39014	156.3301	46.201168	1375.296
03/07/03	12:44:00	96.32003	1397.297	579.931458	256.0473	3.771882	7.6843262	106.4537	62.6001	0.0604249	63.17078	30.60852	14006.469	14253.6621	-0.0732576	-0.4394769	5.1699214	5.29687452	5.38476515	87.39014	157.0313	46.201168	1375.296
03/07/03	12:45:00	96.32003	1397.297	579.931458	256.0473	4.025204	9.7595196	106.4537	65.15136	0.0604249	63.9093	30.8435	14006.469	14253.6621	-0.0732576	-0.4394769	5.1699214	5.29687452	5.38476515	87.39014	153.135	46.201168	1375.296
03/07/03	12:46:00	94.790054	1397.297	579.931458	256.0473	4.025204	8.5998545	106.4537	67.26624	0.0604249	67.87048	30.8435	14006.469	14226.1963	-0.0732576	-0.4394769	5.1699214	5.29687452	5.38476515	87.39014	156.4179	46.68457	1375.296
03/07/03	12:47:00	96.305717	1397.297	579.931458	256.0473	3.773775	9.6089336	106.4537	66.72913	0.0604249	66.35986	30.23925	14006.469	14226.1963	-0.0732576	-0.4394769	5.1699214	5.29687452	5.38476515	87.39014	144.8392	46.68457	1375.296
03/07/03	12:48:00	96.305717	1397.297	579.931458	256.0473	3.781723	10.644529	106.4537	63.5093	0.0604249	63.20434	30.44067	14006.469	14226.1963	-0.0732576	-0.4394769	5.1699214	5.29687452	5.38476515	87.39014	149.4129	46.68457	1375.296
03/07/03	12:49:00	96.305717	1397.297	579.931458	256.0473	4.042692	10.644529	106.4537	63.9093	0.0604249	63.30505	30.8435	14006.469	14226.1963	-0.0732576	-0.4394769	5.1699214	5.29687452	5.38476515	87.39014	155.6257	46.68457	1375.296
03/07/03	12:50:00	96.305717	1397.297	579.931458	256.0473	4.043339	10.644529	106.4537	65.25208	0.0604249	65.18493	34.03259	14006.469	14226.1963	-0.0732576	-0.4394769	5.1699214	5.29687452	5.38476515	87.39014	152.3257	46.68457	1375.296
03/07/03	12:51:00	96.305717	1397.297	579.931458	256.0473	4.043339	8.4167471	106.4537	68.74329	0.0604249	70.1532	31.21277	14006.469	14226.1963	-0.0732576	-0.4394769	5.1699214	5.29687452	5.38476515	87.39014	156.681	46.68457	1375.296
03/07/03	12:52:00	96.305717	1397.297	579.931458	256.0473	4.043339	8.4167471	106.4537	70.42175	0.0604249	69.34753	31.31348	14006.469	14226.1963	-0.0732576	-0.4394769	5.1699214	5.29687452	5.38476515	87.39014	155.8021	46.68457	1375.296
03/07/03	12:53:00	96.305717	1397.297	579.931458	256.0473	4.043339	9.4543457	106.4537	72.53662	0.0604249	70.89172	30.33996	14006.469	14226.1963	-0.0732576	-0.4394769	5.1699214	5.29687452	5.38476515	87.39014	159.977	46.68457	1375.296
03/07/03	12:54:00	96.305717	1397.297	579.931458	256.0473	4.043339	9.4543457	106.4537	76.43066	0.0604249	76.09496	29.19861	14006.469	14226.1963	-0.0732576	-0.4394769	5.1699214	5.29687452	5.38476515	87.39014	155.9783	46.68457	1375.296
03/07/03	12:55:00	96.305717	1397.297	579.931458	256.0473	3.791852	11.499023	106.4537	67.40051	0.0604249	67.83691	30.57495	14006.469	14226.1963	-0.0732576	-0.4394769	5.1699214	5.29687452	5.38476515	87.39014	158.1641	46.68457	1375.296
03/07/03	12:56:00	96.305717	1397.297	579.931458	256.0473	4.30688	11.468505	106.4537	74.68505	0.0604249	74.88647	30.67566	14006.469	14226.1963	-0.0732576	-0.4394769	5.1699214	5.29687452	5.38476515	87.39014	162.9538	46.201168	1375.296
03/07/03	12:57:00	96.305717	1397.297	579.931458	256.0473	3.795547	12.475585	106.4537	69.61609	0.0604249	69.31396	30.60852	14006.469	14226.1963	-0.0732576	-0.4394769	5.1699214	5.29687452	5.38476515	87.39014	168.4242	46.201168	1375.296
03/07/03	12:58:00	96.305717	1397.297	579.931458	256.0473	3.795547	10.217285	106.4537	73.00658	0.0604249	74.81934	30.33996	14006.469	14226.1963	-0.0732576	-0.4394769	5.1699214	5.29687452	5.38476515	87.39014	167.0323	46.201168	1375.296
03/07/03	12:59:00	96.305717	1397.297	579.931458	256.0473	3.795547	10.217285	106.4537	71.02599	0.0604249	72.70446	30.33996	14006.469	14226.1963	-0.0732576	-0.4394769	5.1699214	5.29687452	5.38476515	87.39014	157.7293	46.201168	1375.296
03/07/03	13:00:00	96.305717	1397.297	579.931458	256.0473	3.795547	10.064696	106.4537	67.43407	0.0604249	65.72204	30.20569	14006.469	14226.1963	-0.0732576	-0.4394769	5.1699214	5.29687452	5.38476515	87.39014	154.9182	46.201168	1375.296
03/07/03	13:01:00	96.305717	1397.297	579.931458	256.0473	3.795547	7.8979483	106.4537	69.44824	0.0604249	68.54186	31.1792	14006.469	14226.1963	-0.0732576	-0.4394769	5.1699214	5.29687452	5.38476515	87.39014	160.8332	46.201168	1375.296
03/07/03	13:02:00	96.305717	1397.297	579.931458	256.0473	3.795547	7.8979483	106.4537	70.01892	0.0604249	70.05249	30.87707	14006.469	14226.1963	-0.0732576	-0.4394769	5.1699214	5.29687452	5.38476515	87.39014	157.7293	46.68457	1375.296
03/07/03	13:03:00	96.305717	1397.297	579.931458	256.0473	3.795709	9.942626	106.4537	69.54895	0.0604249	69.91821	32.3877	14006.469	14226.1963	-0.0732576	-0.4394769	5.1699214	5.29687452	5.38476515	87.39014	158.7707	46.68457	1375.296
03/07/03	13:04:00	96.793816	1397.297	579.931458	256.0473	3.795709	7.8979483	106.4537	68.17261	0.0604249	67.87048	30.47425	14006.469	14226.1963	-0.0732576	-0.4394769	5.1699214	5.29687452	5.38476515	87.39014	158.0772	46.68457	1375.296
03/07/03	13:05:00	96.793816	1397.297	579.931458	256.0473	3.795709	9.942626	106.4537	69.14612	0.0604249	68.9447	31.41418	14006.469	14226.1963	-0.0732576	-0.4394769	5.1699214	5.29687452	5.38476515	87.39014	159.977	46.68457	1375.296
03/07/03	13:06:00	96.793816	1397.297	579.931458	256.0473	3.795709	10.949706	106.4537	72.57019	0.0604249	72.87231	30.94421	14006.469	14226.1963	-0.0732576	-0.4394769	5.1699214	5.29687452	5.38476515	87.39014	156.5056	46.68457	1375.296
03/07/03	13:07:00	96.793816	1397.297	579.931458	256.0473	3.795709	12.963866	106.4537	69.91821	0.0604249	69.01184	29.33289	14006.469	14226.1963	-0.0732576	-0.4394769	5.1699214	5.29687452	5.38476515	87.39014	151.3308	46.68457	1375.296
03/07/03	13:08:00	96.793816	1397.297	579.931458	256.0473	3.795709	8.5998545	106.4537	73.1073	0.0604249	73.40942	30.47425	14006.469	14226.1963	-0.0732576	-0.4394769	5.1699214	5.29687452	5.38476515	87.39014	142.3527	46.68457	1375.296
03/07/03	13:09:00	96.793816	1397.297	579.931458	256.0473	3.795709	8.5998545	106.4537	65.5542	0.0604249	65.85632	30.27282	14006.469	14226.1963	-0.0732576	-0.4394769	5.1699214	5.29687452	5.38476515	87.39014	139.527	46.68457	1375.296
03/07/03	13:10:00	96.793816	1397.297	599.963562	256.0473	4.049461	9.6089336	106.4537	73.9801	0.0604249	73.51013	30.17212	14006.469	14226.1963	-0.0732576	-0.4394769	5.1699214	5.29687452	5.38476515	87.39014	137.2445	47.167965	1375.296
03/07/03	13:11:00	96.793816	1397.297	599.963562	256.0473	4.049461	8.355711	106.4537	69.85107	0.0604249	68.50829	31.21277	14006.469	14226.1963	-0.0732576	-0.4394769	5.1699214	5.29687452	5.38476515	87.39014	133.5938	47.167965	1375.296
03/07/03	13:12:00	96.793816	1397.297	599.963562	256.0473	3.799392	5.9448223	106.4537	71.73096	0.0604249	73.57726	31.21277	14006.469	14226.1963	-0.0732576	-0.4394769	5.1699214	5.29687452	5.38476515	87.39014	135.6341	47.167965	1375.296
03/07/03	13:13:00	96.793816	1397.297	599.963562	256.0473	3.799392	5.9448223	106.4537	69.98535	0.0604249	70.05249	31.04492	14006.469	14226.1963	-0.0732576	-0.4394769	5.1699214	5.29687452	5.38476515	87.39014	136.7433	47.167965	1375.296
03/07/03	13:14:00	96.793816	1397.297	599.963562	256.0473	3.799392	8.9660645	106.4537	65.1178	0.0604249	64.8828	30.7428	14006.469	14226.1963	-0.0732576	-0.4394769	5.1699214	5.29687452	5.38476515	87.39014	138.5392	47.167965	1375.296
03/07/03	13:15:00	96.793816	1397.297	599.963562	256.0473	3.799392	9.9731445	106.4537	68.84399	0.0604249	67.1991	30.87707	14006.469	14226.1963	-0.0732576	-0.4394769	5.1699214	5.29687452	5.38476515	87.39014	134.5157	47.167965	1375.296
03/07/03	13:16:00	96.793816	1397.297	599.963562	256.0473	3.799392	7.9589849	106.4537	70.25391	0.0604249	68.74329	31.01135	14006.469	14226.1963	-0.0732576	-0.4394769	5.1699214	5.29687452	5.38476515	87.39014	137.2445	47.167965	1375.296
03/07/03	13:17:00	96.793816	1397.297	599.963562	256.0473	3.799392	5.9448223	106.4537	71.56311	0.0604249	71.83167	31.24634	14006.469	14226.1963	-0.0732576	-0.4394769	5.1699214	5.29687452	5.38476515	87.39014	145.1234	47.167965	1375.296
03/07/03	13:18:00	96.793816	1397.297	599.963562	256.0473	3.799392	4.907227	106.4537	67.60193	0.0604249	66.15845	31.21277	14006.469	14226.1963	-0.0732576	-0.4394769	5.1699214	5.29687452	5.38476515	87.39014	146.2545	47.167965	1375.296
03/07/03	13:19:00	96.793816	1397.297	599.963562	256.0473	3.799392	3.6865222	106.4537	69.51538	0.0604249	69.21326	30.7428	14006.469	14226.1963	-0.0732576	-0.4394769	5.1699214	5.29687452	5.38476515	87.39014	147.0972	47.167965	1375.296
03/07/03	13:20:00	96.793816	1397.297	599.963562	256.0473	3.798992	4.7241206	106.4537	69.61965	0.0604249	70.28748	29.5343	14006.469	14226.1963	-0.0732576	-0.4394769	5.1699214	5.29687452	5.38476515	87.39014	159.375	46.68457	1375.296
03/07/03	13:21:00	96.793816	1397.297	599.963562	256.0473	3.798992	6.9519024	106.4537	69.68322	0.0604249	70.35461	30.37354	14006.469	14226.1963	-0.0732576	-0.4394769	5.1699214	5.29687452	5.38476515	87.39014	157.1187	46.68457	1375.296
03/07/03	13:22:00	96.793816	1397.297	599.963562	256.0473	3.798992	3.9001443	106.4537	69.04541	0.0604249	69.41467	30.67566	14006.469	14226.1963	-0.0732576	-0.4394769	5.1699214	5.29687452	5.38476515	87.39014	156.1543	46.68457	1375.296
03/07/03	13:23:00	96.793816	1397.297	599.963562	256.0473	3.798992	5.9448223	106.4537	69.01184	0.0604249	68.17261	30.20569	14006.469	14226.1963	-0.0732576	-0.4394769	5.1699214	5.29687452	5.38476515	87.39014	150.8763	46.68457	1375.296
03/07/03	13:24:00	96.793816	1397.297	599.963562	256.0473	4.049894	5.9448223	106.4537	71.19385	0.0604249	70.42175	30.67566	14006.469	14226.1963	-0.0732576	-0.4394769	5.1699214	5.29687452	5.38476515	87.39014	152.5959	46.68457	1375.296
03/07/03	13:25:00	96.793816	1397.297	599.963562	256.0473	3.791481	6.9519024	106.4537	66.52771	0.0604249	66.15845	30.67566	14006.469	14226.1963	-0.0732576	-0.4394769	5.1699214	5.29687452	5.38476515	87.39014	159.2888	46.68457	1406.855
03/07/03	13:26:00	96.793816	1397.297	599.963562	256.0473	3.791481	10.400389	106.4537	68.20618	0.0604249	68.37402	30.87707	14006.469	14226.1963	-0.0732576	-0.4394769	5.1699214	5.29687452	5.38476515	87.39014	158.4243	46.68457	1406.855

DATE	TIME	BAFI002 Total Air Flow KPPH	REAI001 CEMS CO2 %	BAAI052 Boiler CO PPM	BATE055 SCR Outlet Temp. DEG F	BATI020 AH Air Outlet Temp. DEG F		AEFY136 Fisher FW Valve Demand %	
03/07/03	12:18:00	2260.402	10.99121	0	612.7563	529.4234	0	39.80959	180.1062
03/07/03	12:19:00	2298.153	11.19263	0	612.7563	529.4234	0	39.78635	180.5762
03/07/03	12:20:00	2298.715	11.19263	0	612.7563	529.4234	0	39.78635	167.5177
03/07/03	12:21:00	2298.713	10.98511	0	612.7563	529.4234	0	39.78635	179.7034
03/07/03	12:22:00	2297.972	11.18652	0	612.7563	529.4234	0	39.81606	155.7349
03/07/03	12:23:00	2297.972	11.19263	0	612.7563	529.4234	0	39.81606	165.1678
03/07/03	12:24:00	2297.972	11.19263	0	612.7563	529.4234	0	39.81606	157.8497
03/07/03	12:25:00	2297.972	10.98511	0	612.7563	529.4234	0	40.84962	165.8728
03/07/03	12:26:00	2333.208	10.99121	0	612.7563	529.4234	0	40.84962	147.2754
03/07/03	12:27:00	2297.866	11.18652	0	612.7563	529.4234	0	40.84962	162.583
03/07/03	12:28:00	2297.866	11.18652	0	612.7563	529.4234	0	40.84962	163.4558
03/07/03	12:29:00	2297.083	10.99121	0	612.7563	529.4234	0	41.99127	168.0548
03/07/03	12:30:00	2294.874	10.99121	0	612.7563	529.4234	0	40.90381	168.3569
03/07/03	12:31:00	2294.874	10.99121	0	612.7563	529.4234	0	40.90381	176.4136
03/07/03	12:32:00	2258.648	10.99121	0	612.7563	529.4234	0	40.90563	185.5109
03/07/03	12:33:00	2261.025	10.98511	0	612.7563	529.4234	0	40.90563	176.2793
03/07/03	12:34:00	2261.025	10.98511	0	612.7563	529.4234	0	39.84167	176.2457
03/07/03	12:35:00	2261.025	11.18652	0	612.7563	529.4234	0	39.84167	169.9011
03/07/03	12:36:00	2261.025	11.08887	0	612.7563	529.4234	0	39.84167	182.5903
03/07/03	12:37:00	2297.36	11.28418	0	612.7563	529.4234	0	40.88325	174.7687
03/07/03	12:38:00	2299.452	11.08276	0	612.7563	529.4234	0	39.80923	182.2211
03/07/03	12:39:00	2299.452	11.28418	0	612.7563	529.4234	0	39.80923	168.3569
03/07/03	12:40:00	2305.819	11.4917	0	612.7563	529.4234	0	39.80923	171.4789
03/07/03	12:41:00	2305.819	11.18652	0	612.7563	529.4234	0	39.80923	177.6892
03/07/03	12:42:00	2266.151	10.98511	0	612.7563	529.4234	0	40.84089	167.7527
03/07/03	12:43:00	2308.616	10.98511	0	612.7563	529.4234	0	40.84089	168.6255
03/07/03	12:44:00	2270.798	11.18652	0	612.7563	529.4234	0	39.76263	156.4398
03/07/03	12:45:00	2305.653	11.18652	0	612.7563	529.4234	0	39.76263	159.9646
03/07/03	12:46:00	2307.248	11.18652	0	612.7563	529.4234	0	39.76263	166.0406
03/07/03	12:47:00	2307.248	10.98511	0	612.7563	529.4234	0	40.88687	163.3887
03/07/03	12:48:00	2301.346	10.99121	0	612.7563	529.4234	0	39.8854	157.6147
03/07/03	12:49:00	2264.474	11.18652	0	612.7563	529.4234	0	40.95102	158.1183
03/07/03	12:50:00	2298.932	11.18652	0	612.7563	529.4234	0	39.93612	164.53
03/07/03	12:51:00	2262.342	11.18652	0	612.7563	529.4234	0	41.02271	170.1697
03/07/03	12:52:00	2297.596	10.88745	0	612.7563	529.4234	0	41.02271	171.1432
03/07/03	12:53:00	2261.125	11.08887	0	612.7563	529.4234	0	41.02271	173.8287
03/07/03	12:54:00	2262.46	11.08887	0	612.7563	529.4234	0	39.90673	181.7847
03/07/03	12:55:00	2262.46	10.99121	0	612.7563	529.4234	0	39.90673	165.8728
03/07/03	12:56:00	2262.46	11.19263	0	612.7563	529.4234	0	39.89894	180.3076
03/07/03	12:57:00	2262.46	11.18652	0	612.7563	529.4234	0	39.89894	169.599
03/07/03	12:58:00	2259.082	10.98511	0	612.7563	529.4234	0	39.89894	178.2263
03/07/03	12:59:00	2259.082	11.19263	0	612.7563	529.4234	0	39.89894	174.1308
03/07/03	13:00:00	2261.02	11.19263	0	612.7563	529.4234	0	40.90305	163.4222
03/07/03	13:01:00	2261.02	11.19263	0	612.7563	529.4234	0	39.87177	169.2297
03/07/03	13:02:00	2297.248	11.19263	0	612.7563	529.4234	0	39.87177	171.0089
03/07/03	13:03:00	2297.248	11.27197	0	612.7563	529.4234	0	40.87391	171.9153
03/07/03	13:04:00	2297.248	11.27197	0	612.7563	529.4234	0	40.87391	166.5778
03/07/03	13:05:00	2297.248	11.27197	0	612.7563	529.4234	0	39.85992	169.5654
03/07/03	13:06:00	2297.248	10.99121	0	612.7563	529.4234	0	39.85992	176.4471
03/07/03	13:07:00	2297.248	11.08887	0	612.7563	529.4234	0	40.8704	168.3234
03/07/03	13:08:00	2297.248	11.08887	0	612.7563	529.4234	0	40.8704	177.0514
03/07/03	13:09:00	2297.248	11.29028	0	612.7563	529.4234	0	40.8704	161.7438
03/07/03	13:10:00	2297.248	11.08276	0	612.7563	529.4234	0	39.85997	177.7228
03/07/03	13:11:00	2297.248	10.98511	0	612.7563	529.4234	0	40.89259	169.6326
03/07/03	13:12:00	2297.248	11.18652	0	612.7563	529.4234	0	40.89259	176.5814
03/07/03	13:13:00	2297.248	10.98511	0	612.7563	529.4234	0	40.89259	171.1432
03/07/03	13:14:00	2260.228	11.08276	0	612.7563	529.4234	0	39.82633	160.8038
03/07/03	13:15:00	2297.455	11.08887	0	612.7563	529.4234	0	40.87283	166.9806
03/07/03	13:16:00	2297.455	11.08276	0	612.7563	529.4234	0	40.87283	170.069
03/07/03	13:17:00	2297.455	11.08276	0	612.7563	529.4234	0	40.79371	174.7015
03/07/03	13:18:00	2297.455	11.08276	0	612.7563	529.4234	0	40.79371	165.0336
03/07/03	13:19:00	2297.455	11.29028	0	612.7563	529.4234	0	39.71986	169.5319
03/07/03	13:20:00	2297.455	11.08887	0	612.7563	529.4234	0	39.71986	169.5319
03/07/03	13:21:00	2297.455	11.28418	0	612.7563	529.4234	0	40.73139	170.4718
03/07/03	13:22:00	2297.455	11.18652	0	612.7563	529.4234	0	40.73139	169.1962
03/07/03	13:23:00	2297.455	11.18652	0	612.7563	529.4234	0	40.77243	167.4506
03/07/03	13:24:00	2297.455	11.18652	0	612.7563	529.4234	0	39.71191	172.3517
03/07/03	13:25:00	2297.455	11.19263	0	612.7563	529.4234	0	40.7379	163.4222
03/07/03	13:26:00	2297.455	11.09497	0	612.7563	529.4234	0	40.7379	167.5177

DATE	TIME	MAJI007 Generator Megawatts MW	MAJI008 Generator Megavars MVAR	NAJT101 13.8 kv NAA01 Gen Aux Load MW	NAJT201 13.8 kv NAA02 Gen Aux Load MW	AEFI135 FW Flow Comp. KPPH	AEFI131 SH Spray Flow KPPH	FDFI002 Sootblower Steam Flow KPPH	FDFI022 SCR Sootblower Stm Flow KPPH	AAFY018A Cont. Blowdown Flow PCT	FBFI021 MS to Aux Stm. Flow KPPH	AETE137 Feedwater Temp. DEG F	AAPTOO6 Selected Drum Pressure PSIG	FDPT002 Sootblower Steam Pressure PSIG	FDTT002 Sootblower Steam Temp. DEG F	FDPT022 A.H. Sootblower Stm. Press PSIG	FDTT022 SCR/AH Sootblower Stm Temp DEG F	ABPIOO7 Turbine Throttle Pressure PSIG	ABTE008 Main Stm Temp DEG F	AEFI111 Reheater Spray Flow KPPH	ABPI010 Cold Reheat Stm Press PSIG	ABTE016 Cold Reheat Temp DEG F
03/07/03	13:27:00	216.03394	20.37961197	14.5733633	7.8625479	1323.357788	149.635	0	1.9952712	0	0	363.7297	2482.0859	316.40622	639.70947	379.57761	803.58887	2400.33	985.285	0	355.98053	564.3542
03/07/03	13:28:00	216.03394	20.37961197	14.5733633	7.8717031	1291.968872	180.1482	0	1.9952712	0	0	363.7297	2482.0859	316.40622	639.70947	379.57761	803.58887	2407.654	986.9073	0	355.98053	564.3542
03/07/03	13:29:00	216.03394	20.37961197	14.5733633	7.8717031	1291.968872	153.3865	0	1.9952712	0	0	363.7297	2482.0859	316.40622	639.70947	379.57761	803.58887	2407.654	975.439	0	355.98053	564.3542
03/07/03	13:30:00	216.03394	20.37961197	14.2712393	7.7893057	1291.968872	153.3865	0	1.9952712	0	0	363.7297	2482.0859	316.40622	639.70947	379.57761	803.58887	2407.654	973.7832	0	355.98053	564.3542

DATE	TIME	ABPT024 Hot Reheat Pressure PSIG	ABTE022 Hot Reheat Temp DEG F	AETE119 BFP Hdr Discharge Temp DEG F	AETE130 FW Htr #7 Outlet Temp DEG F	AETE035 FW Htr #7 Casc Drain Temp DEG F	AFPT026 Cold Reheat Ext Hdr Press PSIG	AFTE027 Cold Reheat Ext Hdr Temp DEG F	AFTI017 HP Aux Steam Temp DEG F	AFFI017 Spray Flow to HP Aux Steam KPPH	AETE055 BFBP Discharge Hdr Temp DEG F	AFPY044A DA Pegging Stm Valve PCT	ASFI006 Caulkins LP Stm Flow Output KPPH	ASFI016 Caulkins HP Stm Flow Output KPPH	MAJI002 Unit Megavars MVAR	MAJI004 Unit Megawatts MW	ADPT003C Absolute Cond Vac Calculated IN HGA	DALT004A Cooling Twr Basin Level IN	DAFI027 Cooling Twr Blow-Down Flow GPM	EAFI034 Cooling Twr Blow-Down SDA GPM	DATE014A Water Box Inlet A Temp DEG F	DATE014B Water Box Inlet B Temp DEG F	DATE016A Water Box Outlet A Temp DEG F
03/07/03	13:27:00	325.8667	929.7721	359.932	361.1158	281.19495	37.170406	283.47711	387.3723	0	254.8895	0	114.796364	15.8892689	5.00487566	217.40721	2.2180176	57.231445	0	badbad	83.715286	82.303619	96.102242
03/07/03	13:28:00	325.8667	929.7721	359.932	361.1158	281.19495	37.170406	283.47711	387.3723	0	254.8895	0	114.796364	15.8892689	5.00487566	217.40721	2.2180176	57.231445	0	badbad	83.700592	82.25959	96.102242
03/07/03	13:29:00	325.8667	928.0836	359.932	361.1158	281.19495	37.170406	283.47711	387.3723	0	254.8895	0	114.796364	15.8096447	5.00487566	217.40721	2.2180176	57.231445	0	badbad	83.67128	82.25959	96.102242
03/07/03	13:30:00	325.8667	928.0836	359.932	361.1158	281.19495	37.170406	283.47711	387.3723	0	254.8895	0	119.053574	15.8096447	5.00487566	217.40721	2.2180176	57.231445	0	badbad	83.67128	82.230186	96.102242

DATE	TIME	DATE016B Water Box Outlet B Temp DEG F	ABFI018 Main Steam Flow KPPH	MBEL100 Excitation Losses KW	BATI013 AH Gas Outlet Temp DEG F	BAAI046 Excess Oxygen PCT	RMAT500 Relative Humidity PCT	BATI011 AH Air Inlet Temp DEG F	JCFT152 Coal Fdr A Flow Rate KPPH	JCFT252 Coal Fdr B Flow Rate KPPH	JCFT352 Coal Fdr C Flow Rate KPPH	JCFT452 Coal Fdr D Flow Rate KPPH	NAET102 13.8 Kv NAA01 Aux Scr Volts VOLTS	NAET202 13.8 Kv NAAO2 Aux Scr Volts VOLTS	NAIT101 13.8 Kv NAAO1 Aux Scr Current AMPS	NAIT201 13.8 Kv NAA02 Aux Scr Current AMPS	MAII006A Generator Arm Current Phase A KA	MAII006B Generator Arm Current Phase B KA	MAII006C Generator Arm Current Phase C KA	RMTT500 Ambient Temp DEG F	ADFI001 Cond Xfer Flow Calculated KPPH	ADLT001 Condenser Hotwell Level IN	TSTMFLO Total Stm Flow KPPH
03/07/03	13:27:00	96.792816	1397.297	599.963562	256.0473	3.791481	8.0200186	106.4537	69.21326	0.0604249	69.2804	31.21277	14006.469	14226.1963	-0.0732576	-0.4394769	5.1699214	5.29687452	5.38476515	87.39014	152.4158	46.68457	1406.855
03/07/03	13:28:00	97.165955	1397.297	599.963562	256.0473	3.791481	8.0200186	106.4537	63.77502	0.0604249	62.83508	30.60852	14006.469	14226.1963	-0.0732576	-0.4394769	5.1699214	5.29687452	5.38476515	87.39014	148.5834	46.68457	1406.855
03/07/03	13:29:00	97.165955	1397.297	599.963562	256.0473	4.045329	6.9824204	106.4537	67.16552	0.0604249	66.72913	34.30115	14006.469	14226.1963	-0.0732576	-0.4394769	5.1699214	5.29687452	5.38476515	87.39014	156.9438	46.68457	1406.855
03/07/03	13:30:00	97.165955	1397.297	599.963562	256.0473	3.795238	7.9895005	106.4537	67.33337	0.0604249	66.25916	30.7428	14006.469	14226.1963	-0.0732576	-0.4394769	5.1699214	5.29687452	5.38476515	87.39014	153.6721	46.68457	1406.855

DATE	TIME	BAFI002 Total Air Flow KPPH	REAI001 CEMS CO2 %	BAAI052 Boiler CO PPM	BATE055 SCR Outlet Temp. DEG F	BATI020 AH Air Outlet Temp. DEG F		AEFY136 Fisher FW Valve Demand %		
03/07/03	13:27:00	2297.455	11.08887	0	612.7563	529.4234	0	39.72865	169.7668	
03/07/03	13:28:00	2297.455	11.29028	0	612.7563	529.4234	0	40.73491	157.279	
03/07/03	13:29:00	2297.455	11.08276	0	612.7563	529.4234	0	40.73491	166.3959	Average Coal Feed, K
03/07/03	13:30:00	2297.455	11.29639	0	612.7563	529.4234	0	39.71825	83.19795	Average, TPH

APPENDIX C

Flue Gas Hg Data

- Summary of Ontario-Hydro Impinger Analyses Data Sheets
- Recovery Data Sheets

Plant No. 1 **Sample Identification**

Test #	Date	Sample ID #	Location	Operator	Sample Description	Analytical #
1	3/4/03	1	Inlet	Jim	Thimble	030577
1	3/4/03	2	Inlet	Jim	Probe Rinse	030663
1	3/4/03	3	Inlet	Jim	Heated Line Rinse	030664
1	3/4/03	4	Inlet	Jim	KCl Impinger	030666
1	3/4/03	5	Inlet	Jim	H_2O_2/ HNO_3 Impinger	030660
1	3/4/03	6	Inlet	Jim	$KMnO_4$ Impinger	030661
1	3/4/03	7	Inlet	Jim	Final Rinse	N/A
1	3/4/03	8	Outlet	Jeff	Thimble	030578
1	3/4/03	9	Outlet	Jeff	Probe Rinse	030662
1	3/4/03	10	Outlet	Jeff	KCl Impinger	030657
1	3/4/03	11	Outlet	Jeff	H_2O_2/ HNO_3 Impinger	030658
1	3/4/03	12	Outlet	Jeff	$KMnO_4$ Impinger	030659
1	3/4/03	13	Outlet	Jeff	Final Rinse	030654
1	3/4/03	14	Stack	Ron	Probe Rinse	030655
1	3/4/03	15	Stack	Ron	3" Filter	030579
1	3/4/03	16	Stack	Ron	KCl Impinger	030656
1	3/4/03	17	Stack	Ron	H_2O_2/ HNO_3 Impinger	030651
1	3/4/03	18	Stack	Ron	$KMnO_4$ Impinger	030652
1	3/4/03	19	Stack	Ron	Final Rinse	030653
2	3/6/03	20	Inlet	Jim	Thimble	030583
2	3/6/03	21	Inlet	Jim	Probe Rinse	030648
2	3/6/03	22	Inlet	Jim	Heated Line Rinse	030649
2	3/6/03	23	Inlet	Jim	KCl Impinger	030650
2	3/6/03	24	Inlet	Jim	H_2O_2/ HNO_3 Impinger	030645
2	3/6/03	25	Inlet	Jim	$KMnO_4$ Impinger	030646
2	3/6/03	26	Inlet	Jim	Final Rinse	030647
2	3/6/03	27	Outlet	Jeff	Thimble	030584
2	3/6/03	28	Outlet	Jeff	Probe Rinse	030642
2	3/6/03	29	Outlet	Jeff	KCl Impinger	030643
2	3/6/03	30	Outlet	Jeff	H_2O_2/ HNO_3 Impinger	030644
2	3/6/03	31	Outlet	Jeff	$KMnO_4$ Impinger	030639
2	3/6/03	32	Outlet	Jeff	Final Rinse	030640
2	3/6/03	33	Stack	Ron	Probe Rinse	030641
2	3/6/03	34	Stack	Ron	3" Filter	030585
2	3/6/03	35	Stack	Ron	KCl Impinger	030636
2	3/6/03	36	Stack	Ron	H_2O_2/ HNO_3 Impinger	030637
2	3/6/03	37	Stack	Ron	$KMnO_4$ Impinger	030638
2	3/6/03	38	Stack	Ron	Final Rinse	030635
3	3/6/03	39	Inlet	Jim	Thimble	030580
3	3/6/03	40	Inlet	Jim	Probe Rinse	030632
3	3/6/03	41	Inlet	Jim	Heated Line Rinse	030633
3	3/6/03	42	Inlet	Jim	KCl Impinger	030634
3	3/6/03	43	Inlet	Jim	H_2O_2/ HNO_3 Impinger	030629
3	3/6/03	44	Inlet	Jim	$KMnO_4$ Impinger	030630
3	3/6/03	45	Inlet	Jim	Final Rinse	030631
3	3/6/03	46	Outlet	Jeff	Thimble	030581

3	3/6/03	47	Outlet	Jeff	Probe Rinse	030626
3	3/6/03	48	Outlet	Jeff	KCl Impinger	030627
3	3/6/03	49	Outlet	Jeff	H_2O_2/ HNO_3 Impinger	030628
3	3/6/03	50	Outlet	Jeff	$KMnO_4$ Impinger	030623
3	3/6/03	51	Outlet	Jeff	Final Rinse	030624
3	3/6/03	52	Stack	Ron	Probe Rinse	030625
3	3/6/03	53	Stack	Ron	3" Filter	030582
3	3/6/03	54	Stack	Ron	KCl Impinger	030620
3	3/6/03	55	Stack	Ron	H_2O_2/ HNO_3 Impinger	030621
3	3/6/03	56	Stack	Ron	$KMnO_4$ Impinger	030622
3	3/6/03	57	Stack	Ron	Final Rinse	030619
4	3/7/03	58	Inlet	Jim	Thimble	030586
4	3/7/03	59	Inlet	Jim	Probe Rinse	030603
4	3/7/03	60	Inlet	Jim	Heated Line Rinse	030604
4	3/7/03	61	Inlet	Jim	KCl Impinger	030605
4	3/7/03	62	Inlet	Jim	H_2O_2/ HNO_3 Impinger	030606
4	3/7/03	63	Inlet	Jim	$KMnO_4$ Impinger	030607
4	3/7/03	64	Inlet	Jim	Final Rinse	030608
4	3/7/03	65	Outlet	Jeff	Thimble	030587
4	3/7/03	66	Outlet	Jeff	Probe Rinse	030609
4	3/7/03	67	Outlet	Jeff	KCl Impinger	030610
4	3/7/03	68	Outlet	Jeff	H_2O_2/ HNO_3 Impinger	030611
4	3/7/03	69	Outlet	Jeff	$KMnO_4$ Impinger	030612
4	3/7/03	70	Outlet	Jeff	Final Rinse	030613
4	3/7/03	71	Stack	Ron	Probe Rinse	030614
4	3/7/03	72	Stack	Ron	3" Filter	030588
4	3/7/03	73	Stack	Ron	KCl Impinger	030615
4	3/7/03	74	Stack	Ron	H_2O_2/ HNO_3 Impinger	030616
4	3/7/03	75	Stack	Ron	$KMnO_4$ Impinger	030617
4	3/7/03	76	Stack	Ron	Final Rinse	030618
Blank Impingers						
1,2,3,4	3/7/03	77	Lab Trailor	Jr.	KCl Impinger	030600
1,2,3,4	3/7/03	78	Lab Trailor	Jr.	H_2O_2/ HNO_3 Impinger	030601
1,2,3,4	3/7/03	79	Lab Trailor	Jr.	$KMnO_4$ Impinger	030602
1,2,3,4	3/7/03	80	Lab Trailor	Jr.	Final Rinse	030599
Solution Blanks/ Standards						
1	3/4/03	81	Lab Trailor	Jr.	KCl Impinger solution	030596
2-3	3/6/03	82	Lab Trailor	Jr.	KCl Impinger solution	030597
4	3/7/03	83	Lab Trailor	Jr.	KCl Impinger solution	030598
1,2,3,4	3/3/03	84	Lab Trailor	Jr.	H_2O_2/ HNO_3 Imp. Solution	030593
1	3/4/03	85	Lab Trailor	Jr.	$KMnO_4$ Impinger solution	030594
2,3,4	3/6/03	86	Lab Trailor	Jr.	$KMnO_4$ Impinger solution	030595
1,2,3,4	3/3/03	87	Lab Trailor	Jr.	HCl/HNO_3 Probe/Final Rinse	030591
1,2,3,4	3/3/03	88	Lab Trailor	Jr.	Thimble Blank	030598
1,2,3,4	3/3/03	89	Lab Trailor	Jr.	3" Filter Blank	030590
1,2,3,4	3/3/03	90	Lab Trailor	Jr.	Final Rinse (filter casings)	030592

Locke, Jim

From: Winter, Steve
Sent: Tuesday, April 08, 2003 3:18 PM
To: Locke, Jim; Withum, Jeff
Cc: Conrad, Vince
Subject: SRM Hg Results for Plant No. 1 Samples

Plant No. 1

Note: Methodology for Process Samples (Coals, Ashes, Slurries) is ASTM D 6722, "Total Mercury in Coal and Combustion Residues". The technique is direct combustion with AA detection.

Steve

Test #	Date	Sample ID #	Location	Operator	Sample Description	Analytical #	Hg (ng/ml or ppb)	
1	3/4/03	2	Inlet	Jim	Probe Rinse	030663	13.5	
1	3/4/03	3	Inlet	Jim	Heated Line Rinse	030664	14.9	
1	3/4/03	7	Inlet	Jim	Final Rinse	N/A		
1	3/4/03	9	Outlet	Jeff	Probe Rinse	030662	10.1	
1	3/4/03	13	Outlet	Jeff	Final Rinse	030654	< 1.0	
1	3/4/03	14	Stack	Ron	Probe Rinse	030655	12.8	
1	3/4/03	19	Stack	Ron	Final Rinse	030653	< 1.0	
2	3/6/03	21	Inlet	Jim	Probe Rinse	030648	10.3	
2	3/6/03	22	Inlet	Jim	Heated Line Rinse	030649	13.1	
2	3/6/03	26	Inlet	Jim	Final Rinse	030647	<1.0	
2	3/6/03	28	Outlet	Jeff	Probe Rinse	030642	10.4	
2	3/6/03	32	Outlet	Jeff	Final Rinse	030640	1.8	
2	3/6/03	33	Stack	Ron	Probe Rinse	030641	7.1	
2	3/6/03	38	Stack	Ron	Final Rinse	030635	< 1.0	
3	3/6/03	40	Inlet	Jim	Probe Rinse	030632	11.4	
3	3/6/03	41	Inlet	Jim	Heated Line Rinse	030633	14.5	
3	3/6/03	45	Inlet	Jim	Final Rinse	030631	1.4	
3	3/6/03	47	Outlet	Jeff	Probe Rinse	030626	10.2	Jr Filltered
3	3/6/03	51	Outlet	Jeff	Final Rinse	030624	< 1.0	
3	3/6/03	52	Stack	Ron	Probe Rinse	030625	6.1	
3	3/6/03	57	Stack	Ron	Final Rinse	030619	2.7	
4	3/7/03	59	Inlet	Jim	Probe Rinse	030603	11.5	
4	3/7/03	60	Inlet	Jim	Heated Line Rinse	030604	13.6	
4	3/7/03	64	Inlet	Jim	Final Rinse	030608	< 1.0	
4	3/7/03	66	Outlet	Jeff	Probe Rinse	030609	9.5	Jr Filltered
4	3/7/03	70	Outlet	Jeff	Final Rinse	030613	< 1.0	
4	3/7/03	71	Stack	Ron	Probe Rinse	030614	7.2	
4	3/7/03	76	Stack	Ron	Final Rinse	030618	< 1.0	
1,2,3,4	3/7/03	80	Lab Trailor	Jr.	Final Rinse	030599	< 1.0	
1,2,3,4	3/3/03	87	Lab Trailor	Jr.	HCl/HNO3 Probe/Final Rinse	030591	2.1	
1,2,3,4	3/3/03	90	Lab Trailor	Jr.	Final Rinse (filter casings)	030592	16.4	

QAQC

1	3/4/03	2	Inlet	Jim	Probe Rinse	30663 dup	12.2	good within 20%
						030663spike	spike recovery 80%	good
2	3/6/03	22	Inlet	Jim	Heated Line Rinse	30649 dup	13.9	good within 20%
						030649spike	spike recovery 90%	good
4	3/7/03	76	Stack	Ron	Final Rinse	030618dup	< 1.0	good within 20%
						030618spike	spike recovery 90%	good

samples were spiked at a 2 ppb concentration

Test #	Date	Sample ID #	Location	Operator	Sample Description	Analytical #	Hg (ng/filter)	Comments
1	3/4/03	15	Stack	Ron	3" Filter	030579	17.4	digested whole filter
2	3/6/03	34	Stack	Ron	3" Filter	030585	9.5	digested whole filter
3	3/6/03	53	Stack	Ron	3" Filter	030582	10.5	digested whole filter
4	3/7/03	72	Stack	Ron	3" Filter	030588	38.0	digested whole filter
1,2,3,4	3/3/03	89	Lab Trailor	Jr.	3" Filter Blank	030590	90.0	digested whole filter
Test #	Date	Sample ID #	Location	Operator	Sample Description	Analytical #	Hg (ng/mg)	Comments
1	3/4/03	1	Inlet	Jim	Thimble	030577	0.02	digested 1g of loose part in thimble
1	3/4/03	8	Outlet	Jeff	Thimble	030578	0.50	digested 1g of loose part in thimble
2	3/6/03	20	Inlet	Jim	Thimble	030583	< 0.005	digested 1g of loose part in thimble
2	3/6/03	27	Outlet	Jeff	Thimble	030584	0.24	digested 1g of loose part in thimble
3	3/6/03	39	Inlet	Jim	Thimble	030580	0.007	digested 1g of loose part in thimble
3	3/6/03	46	Outlet	Jeff	Thimble	030581	0.19	digested 1g of loose part in thimble
4	3/7/03	58	Inlet	Jim	Thimble	030586	< 0.005	digested 1g of loose part in thimble
4	3/7/03	65	Outlet	Jeff	Thimble	030587	0.41	digested 1g of loose part in thimble
1,2,3,4	3/3/03	88	Lab Trailor	Jr.	Thimble Blank	030589	0.08 (run 2x)	digested 1g of thimble

QA/QC

2	3/6/03	20	Inlet	Jim	Thimble	030583dup	< 0.005	dup is good, digested 1g of loose part.
						030583spike	spike recovery = 80%	spike is good

Spike = 5ppb

Additional Thimbles

Test #	Date	Sample ID #	Location	Operator	Sample Description	Analytical #	Hg (ng/mg)	Comments
		93Thimble			Thimble Blank	N	0.02	digested 1g of thimble
		94Thimble			Thimble Blank	F	0.08	digested 1g of thimble
		95Thimble			Thimble Blank	FE	0.06	digested 1g of thimble

N=Never ~~went to~~ Florida.
F= Went to ~~Florida~~ but was not exposed, stayed in the box.
FE=Went ~~to Florida~~, exposed but not used in sampling.

Replace "Florida" with "Plant"

Test #	Date	Sample ID #	Location	Operator	Sample Description	Analytical #	Hg (ng/ml or ppb)	Comments
1	3/4/03	4	Inlet	Jim	KCl Impinger	030666	5.7	
1	3/4/03	10	Outlet	Jeff	KCl Impinger	030657	8.1	
1	3/4/03	16	Stack	Ron	KCl Impinger	030656	< 1.0	
2	3/6/03	23	Inlet	Jim	KCl Impinger	030650	5.3	
2	3/6/03	29	Outlet	Jeff	KCl Impinger	030643	21.3	
2	3/6/03	35	Stack	Ron	KCl Impinger	030636	< 1.0	
3	3/6/03	42	Inlet	Jim	KCl Impinger	030634	9.3	
3	3/6/03	48	Outlet	Jeff	KCl Impinger	030627	17.1	Jr Filtered.
3	3/6/03	54	Stack	Ron	KCl Impinger	030620	< 1.0	
4	3/7/03	61	Inlet	Jim	KCl Impinger	030605	6.9	
4	3/7/03	67	Outlet	Jeff	KCl Impinger	030610	8.2	Jr Filtered.
4	3/7/03	73	Stack	Ron	KCl Impinger	030615	< 1.0	
1,2,3,4	3/7/03	77	Lab Trailor	Jr.	KCl Impinger	030600	< 1.0	
1	3/4/03	81	Lab Trailor	Jr.	KCl Impinger solution	030596	< 1.0	
2-3	3/6/03	82	Lab Trailor	Jr.	KCl Impinger solution	030597	< 1.0	
4	3/7/03	83	Lab Trailor	Jr.	KCl Impinger solution	030598	< 1.0	

QA/QC

1	3/4/03	4	Inlet	Jim	KCl Impinger	030666dup	5.5	good within 20%
						030666spike	spike recovery 96%	good
2	3/6/03	29	Outlet	Jeff	KCl Impinger	30643dup	21.8	good within 20%
						030643spike	spike recovery 98%	good
3	3/6/03	54	Stack	Ron	KCl Impinger	030620dup	< 1.0	good within 20%
						030620spike	spike recovery 96%	good

Spike concentration = 15ppb

Test #	Date	Sample ID #	Location	Operator	Sample Description	Analytical #	Hg (ng/ml or ppb)
1	3/4/03	5	Inlet	Jim	H2O2/ HNO3 Impinger	030660	2.1
1	3/4/03	11	Outlet	Jeff	H2O2/ HNO3 Impinger	030658	< 1.0
1	3/4/03	17	Stack	Ron	H2O2/ HNO3 Impinger	030651	< 1.0
2	3/6/03	24	Inlet	Jim	H2O2/ HNO3 Impinger	030645	1.6
2	3/6/03	30	Outlet	Jeff	H2O2/ HNO3 Impinger	030644	1.0
2	3/6/03	36	Stack	Ron	H2O2/ HNO3 Impinger	030637	1.8
3	3/6/03	43	Inlet	Jim	H2O2/ HNO3 Impinger	030629	4.5
3	3/6/03	49	Outlet	Jeff	H2O2/ HNO3 Impinger	030628	< 1.0
3	3/6/03	55	Stack	Ron	H2O2/ HNO3 Impinger	030621	< 1.0
4	3/7/03	62	Inlet	Jim	H2O2/ HNO3 Impinger	030606	< 1.0
4	3/7/03	68	Outlet	Jeff	H2O2/ HNO3 Impinger	030611	< 1.0
4	3/7/03	74	Stack	Ron	H2O2/ HNO3 Impinger	030616	< 1.0
1,2,3,4	3/7/03	78	Lab Trailor	Jr.	H2O2/ HNO3 Impinger	030601	< 1.0
1,2,3,4	3/3/03	84	Lab Trailor	Jr.	H2O2/ HNO3 Imp. Solution	030593	< 1.0

QA/QC

1	3/4/03	17	Stack	Ron	H2O2/ HNO3 Impinger	030651dup	< 1.0	good within 20%
						030651spike	spike recovery 93%	good
2	3/6/03	30	Outlet	Jeff	H2O2/ HNO3 Impinger	030644dup	< 1.0	
						030644spike	spike recovery 97%	good
4	3/7/03	62	Inlet	Jim	H2O2/ HNO3 Impinger	030606dup	1.0	
						030606spike	spike recovery 97%	good

spike concentration = 2 ppb

Test #	Date	Sample ID #	Location	Operator	Sample Description	Analytical #	Hg (ng/ml or ppb)	Comments
1	3/4/03	6	Inlet	Jim	KMnO4 Impinger	030661	16.1	
1	3/4/03	12	Outlet	Jeff	KMnO4 Impinger	030659	< 1.0	
1	3/4/03	18	Stack	Ron	KMnO4 Impinger	030652	1.6	
2	3/6/03	25	Inlet	Jim	KMnO4 Impinger	030646	33.4	
2	3/6/03	31	Outlet	Jeff	KMnO4 Impinger	030639	2.2	
2	3/6/03	37	Stack	Ron	KMnO4 Impinger	030638	1.3	
3	3/6/03	44	Inlet	Jim	KMnO4 Impinger	030630	48.2	
3	3/6/03	50	Outlet	Jeff	KMnO4 Impinger	030623	2.4	
3	3/6/03	56	Stack	Ron	KMnO4 Impinger	030622	1.3	
4	3/7/03	63	Inlet	Jim	KMnO4 Impinger	030607	24.8	
4	3/7/03	69	Outlet	Jeff	KMnO4 Impinger	030612	2.5	
4	3/7/03	75	Stack	Ron	KMnO4 Impinger	030617	< 1.0	
1,2,3,4	3/7/03	79	Lab Trailor	Jr.	KMnO4 Impinger	030602	< 1.0	
1	3/4/03	85	Lab Trailor	Jr.	KMnO4 Impinger solution	030594	8.8	
2,3,4	3/6/03	86	Lab Trailor	Jr.	KMnO4 Impinger solution	030595	< 1.0	

QA/QC

1	3/4/03	12	Outlet	Jeff	KMnO4 Impinger	30659dup	< 1.0	good within 20%
						030659spike	spike recovery 92%	good
2	3/6/03	37	Stack	Ron	KMnO4 Impinger	030638dup	1.3	good within 20%
						030638spike	spike recovery 92%	good
4	3/7/03	63	Inlet	Jim	KMnO4 Impinger	030607dup	23.8	good within 20%
						030607spike	spike recovery 90%	good

Spike Concentration = 10ppb

Mercury Results on SRMs used to Verify Calibration on Plant No. 1 Samples

SAMPLE TYPE	SRM 1641D (ng/ml)	SRM 1633B (ng/g)	SRM 1632C (ng/g)	ANALYSIS Date
Rinses	7.9			3/18/2003
	8			
	7.9			
	7.9			
	8			
	7.8			
	7.8			
	7.9			
H2O2/HNO3 Impingers	7.9			3/19/2003
	7.8			
	7.7			
KCL Impingers	8			3/19/2003
	8.3			
	8.1			
	8.1			
KMnO4 Impingers	8			3/20/2003
	7.8			
	7.8			
	7.9			
Thimbles		151		3/24/2003
		140		
	8.1			
	8.2			
	8.3			
Slurry Filtrates	7.9			3/25/2003
	7.5			
	7.6			
	7.7			
ThimblesPaticulate/Disc Filters		141		3/26/2003
	8.1			
	7.9			
	8			
	8.1			
Process Samples (Coals, Ashes, Slurry Solids)			106	3/19/2003
			95	
		154		
		161		
		159		3/20/2003
			101	
			110	3/21/2003
		160		
		157		

1641D = 8.0 ng/ml
1633B = 141 ng/g
1632C= 94ng/g

SCR/FGD MERCURY SAMPLING PROGRAM - PLANT NO. 1

Ontario Hydro Hg Sampling Train Recovery Data

Date: [illegible] Test ID: [illegible]

SCR Inlet:

Bottle #	Description	Analytical No.	Initial Vol mL	Final Vol mL	ppb Hg	Total ug of Hg
S	Filter/Solids	[illegible]		[illegible]		
1	Probe & Filter Rinse	[illegible]			[illegible]	[illegible]
2	Heated Line Rinse	[illegible]			[illegible]	[illegible]
3	KCl Impingers	[illegible]	[illegible]	[illegible]	[illegible]	[illegible]
4	HNO_3/H_2O_2 Impinger	[illegible]	[illegible]	[illegible]	[illegible]	[illegible]
5	$KMnO_4$ Impingers	[illegible]	[illegible]	[illegible]	[illegible]	[illegible]
6	$KMnO_4$ Acid Rinse	—	—	—	[illegible]	[illegible]
7	Silica Gel				NA	NA

Total Particulate Wt. [illegible] grams Condensate Total [illegible] mL

Air Heater Outlet:

Bottle #	Description	Analytical No.	Initial Vol mL	Final Vol mL	ppb Hg	Total ug of Hg
S	Filter/Solids	[illegible]		[illegible]		
1	Probe & Filter Rinse	[illegible]		[illegible]	[illegible]	[illegible]
2	KCl Impingers	[illegible]	[illegible]	[illegible]	[illegible]	[illegible]
3	HNO_3/H_2O_2 Impinger	[illegible]	[illegible]	[illegible]	[illegible]	[illegible]
4	$KMnO_4$ Impingers	[illegible]	[illegible]	[illegible]	[illegible]	[illegible]
5	$KMnO_4$ Acid Rinse	[illegible]		[illegible]	[illegible]	[illegible]
6	Silica Gel				NA	NA

Total Particulate Wt. [illegible] grams Condensate Total [illegible] mL

Stack:

Bottle #	Description	Analytical No.	Initial Vol mL	Final Vol mL	ppb Hg	Total ug of Hg
S	Filter/Solids	[illegible]		[illegible]		
1	Probe & Filter Rinse	[illegible]		[illegible]	[illegible]	[illegible]
2	KCl Impingers	[illegible]	[illegible]	[illegible]	[illegible]	[illegible]
3	HNO_3/H_2O_2 Impinger	[illegible]	[illegible]	[illegible]	[illegible]	[illegible]
4	$KMnO_4$ Impingers	[illegible]	[illegible]	[illegible]	[illegible]	[illegible]
5	$KMnO_4$ Acid Rinse	[illegible]		[illegible]	[illegible]	[illegible]
6	Silica Gel				NA	NA

Total Particulate Wt. [illegible] grams Condensate Total [illegible] mL

Recovered By: [illegible] Date: [illegible]

SCR/FGD MERCURY SAMPLING PROGRAM - PLANT NO. 1

Ontario Hydro Hg Sampling Train Recovery Data

Date:_____ Test ID:_____

SCR Inlet:

Bottle #	Description	Analytical No.	Initial Vol mL	Final Vol mL	ppb Hg	Total ug of Hg
S	Filter/Solids					
1	Probe & Filter Rinse				10.3	
2	Heated Line Rinse				13.1	
3	KCl Impingers				5.5	
4	HNO_3/H_2O_2 Impinger				1.6	
5	$KMnO_4$ Impingers				53.4	
6	$KMnO_4$ Acid Rinse					
7	Silica Gel				NA	NA

Total Particulate Wt._____ grams Condensate Total_____ mL

Air Heater Outlet:

Bottle #	Description	Analytical No.	Initial Vol mL	Final Vol mL	ppb Hg	Total ug of Hg
S	Filter/Solids					
1	Probe & Filter Rinse					
2	KCl Impingers					
3	HNO_3/H_2O_2 Impinger					
4	$KMnO_4$ Impingers					
5	$KMnO_4$ Acid Rinse					
6	Silica Gel				NA	NA

Total Particulate Wt._____ grams Condensate Total_____ mL

Stack:

Bottle #	Description	Analytical No.	Initial Vol mL	Final Vol mL	ppb Hg	Total ug of Hg
S	Filter/Solids					
1	Probe & Filter Rinse					
2	KCl Impingers					
3	HNO_3/H_2O_2 Impinger					
4	$KMnO_4$ Impingers					
5	$KMnO_4$ Acid Rinse					
6	Silica Gel				NA	NA

Total Particulate Wt._____ grams Condensate Total_____ mL

Recovered By:_____ Date:_____

SCR/FGD MERCURY SAMPLING PROGRAM - PLANT NO. 1

Ontario Hydro Hg Sampling Train Recovery Data

Date: [illegible] Test ID: 3

SCR Inlet:

Bottle #	Description	Analytical No.	Initial Vol mL	Final Vol mL	ppb Hg	Total ug of Hg
S	Filter/Solids	[illegible]		[illegible]		
1	Probe & Filter Rinse	[illegible]		[illegible]	[illegible]	[illegible]
2	Heated Line Rinse	[illegible]		[illegible]	[illegible]	[illegible]
3	KCl Impingers	[illegible]	[illegible]	[illegible]	[illegible]	[illegible]
4	HNO_3/H_2O_2 Impinger	[illegible]	[illegible]	[illegible]	[illegible]	[illegible]
5	$KMnO_4$ Impingers	[illegible]	[illegible]	[illegible]	[illegible]	[illegible]
6	$KMnO_4$ Acid Rinse	[illegible]		[illegible]	[illegible]	[illegible]
7	Silica Gel				NA	NA

Total Particulate Wt. [illegible] grams Condensate Total [illegible] mL

Air Heater Outlet:

Bottle #	Description	Analytical No.	Initial Vol mL	Final Vol mL	ppb Hg	Total ug of Hg
S	Filter/Solids	[illegible]		[illegible]		
1	Probe & Filter Rinse	[illegible]		[illegible]	[illegible]	[illegible]
2	KCl Impingers	[illegible]	[illegible]	[illegible]	[illegible]	[illegible]
3	HNO_3/H_2O_2 Impinger	[illegible]	[illegible]	[illegible]	[illegible]	[illegible]
4	$KMnO_4$ Impingers	[illegible]	[illegible]	[illegible]	[illegible]	[illegible]
5	$KMnO_4$ Acid Rinse	[illegible]		[illegible]	[illegible]	[illegible]
6	Silica Gel				NA	NA

Total Particulate Wt. [illegible] grams Condensate Total [illegible] mL

Stack:

Bottle #	Description	Analytical No.	Initial Vol mL	Final Vol mL	ppb Hg	Total ug of Hg
S	Filter/Solids	[illegible]		[illegible]		
1	Probe & Filter Rinse	[illegible]		[illegible]	[illegible]	[illegible]
2	KCl Impingers	[illegible]	[illegible]	[illegible]	[illegible]	[illegible]
3	HNO_3/H_2O_2 Impinger	[illegible]	[illegible]	[illegible]	[illegible]	[illegible]
4	$KMnO_4$ Impingers	[illegible]	[illegible]	[illegible]	[illegible]	[illegible]
5	$KMnO_4$ Acid Rinse	[illegible]		[illegible]	[illegible]	[illegible]
6	Silica Gel				NA	NA

Total Particulate Wt. [illegible] grams Condensate Total [illegible] mL

Recovered By: [illegible] Date: [illegible]

SCR/FGD MERCURY SAMPLING PROGRAM - PLANT NO. 1

Ontario Hydro Hg Sampling Train Recovery Data

Date:_____ Test ID:_____

SCR Inlet:

Bottle #	Description	Analytical No.	Initial Vol mL	Final Vol mL	ppb Hg	Total ug of Hg
S	Filter/Solids					
1	Probe & Filter Rinse					
2	Heated Line Rinse					
3	KCl Impingers					
4	HNO_3/H_2O_2 Impinger					
5	$KMnO_4$ Impingers					
6	$KMnO_4$ Acid Rinse					
7	Silica Gel				NA	NA

Total Particulate Wt._____ grams Condensate Total_____ mL

Air Heater Outlet:

Bottle #	Description	Analytical No.	Initial Vol mL	Final Vol mL	ppb Hg	Total ug of Hg
S	Filter/Solids					
1	Probe & Filter Rinse					
2	KCl Impingers					
3	HNO_3/H_2O_2 Impinger					
4	$KMnO_4$ Impingers					
5	$KMnO_4$ Acid Rinse					
6	Silica Gel				NA	NA

Total Particulate Wt._____ grams Condensate Total_____ mL

Stack:

Bottle #	Description	Analytical No.	Initial Vol mL	Final Vol mL	ppb Hg	Total ug of Hg
S	Filter/Solids					
1	Probe & Filter Rinse					
2	KCl Impingers					
3	HNO_3/H_2O_2 Impinger					
4	$KMnO_4$ Impingers					
5	$KMnO_4$ Acid Rinse					
6	Silica Gel				NA	NA

Total Particulate Wt._____ grams Condensate Total_____ mL

Recovered By:_____ Date:_____

CONSOL ENERGY INC.
RESEARCH & DEVELOPMENT
ANALYTICAL LABORATORY
4000 BROWNSVILLE ROAD, SOUTH PARK, PA 15129

DESCRIPTION PLANT NO. 1 *TEST 1 3-4-03 THIMBLE - JIM*

SAMPLE NUMBER 1

DATE LOGGED 03/10/03
DATE COMPLETED 03/26/03
PROJECT NUMBER 1621-87 -
ANALYTICAL NUMBER 030577

ANALYSIS REPORT

MISC. (As Det.)	
LOI	90.82
Hg	0.02 ng/mg

ULTIMATE (As Det)%	
Carbon	8.27

MAJOR ASH ELEM (As Det)%	
SiO2	50.07
Al2O3	25.61
TiO2	1.34
Fe2O3	7.65
CaO	1.52
MgO	1.07
Na2O	0.44
K2O	2.53
P2O5	0.16
SO3	0.47
UND	9.14

DISTRIBUTION:
A. SCHWALB
J. LOCKE

Approved for transmittal _____

CONSOL ENERGY INC.
RESEARCH & DEVELOPMENT
ANALYTICAL LABORATORY
4000 BROWNSVILLE ROAD, SOUTH PARK, PA 15129

DESCRIPTION PLANT NO. 1 *TEST 1 3-4-03 THIMBLE - JEFF*

SAMPLE NUMBER 8

DATE LOGGED 03/10/03
DATE COMPLETED 03/26/03
PROJECT NUMBER 1621-87 -
ANALYTICAL NUMBER 030578

ANALYSIS REPORT

MISC. (As Det.)	
LOI	89.86
Hg	0.50 ng/mg

ULTIMATE (As Det)%	
Carbon	9.25

MAJOR ASH ELEM (As Det)%	
SiO2	49.20
Al2O3	25.01
TiO2	1.31
Fe2O3	7.55
CaO	1.48
MgO	1.06
Na2O	0.43
K2O	2.46
P2O5	0.16
SO3	0.51
UND	10.83

DISTRIBUTION:
A. SCHWALB
J. LOCKE

Approved for transmittal _____

CONSOL ENERGY INC.
RESEARCH & DEVELOPMENT
ANALYTICAL LABORATORY
4000 BROWNSVILLE ROAD, SOUTH PARK, PA 15129

DESCRIPTION **PLANT NO. 1** *TEST 1 3-4-03 3" FILTER - RON*

SAMPLE NUMBER 15

DATE LOGGED *03/10/03*
DATE COMPLETED *04/01/03*
PROJECT NUMBER *1621-87 -*
ANALYTICAL NUMBER **030579**

ANALYSIS REPORT

MISC. (As Det.)	
LOI	NES
Hg	17.4 ng/filter

ULTIMATE (As Det)%	
Carbon	NES

MAJOR ASH ELEM (As Det)%	
SiO2	
Al2O3	
TiO2	
Fe2O3	
CaO	
MgO	
Na2O	
K2O	
P2O5	
SO3	
UND	*****

DISTRIBUTION:
A. SCHWALB
J. LOCKE

Approved for transmittal _____

CONSOL ENERGY INC.
RESEARCH & DEVELOPMENT
ANALYTICAL LABORATORY
4000 BROWNSVILLE ROAD, SOUTH PARK, PA 15129

DESCRIPTION PLANT NO. 1 *TEST 2 3-6-03 AM THIMBLE - JIM*

SAMPLE NUMBER 20

DATE LOGGED 03/10/03
DATE COMPLETED 03/26/03
PROJECT NUMBER 1621-87 -
ANALYTICAL NUMBER 030583

ANALYSIS REPORT

MISC. (As Det.)	
LOI	96.30
Hg	<0.005 ng/mg

ULTIMATE (As Det)%	
Carbon	3.14

MAJOR ASH ELEM (As Det)%	
SiO2	52.39
Al2O3	25.29
TiO2	1.16
Fe2O3	10.89
CaO	1.79
MgO	1.21
Na2O	0.43
K2O	2.90
P2O5	0.11
SO3	0.44
UND	3.39

DISTRIBUTION:
A. SCHWALB
J. LOCKE

Approved for transmittal _____

CONSOL ENERGY INC.
RESEARCH & DEVELOPMENT
ANALYTICAL LABORATORY
4000 BROWNSVILLE ROAD, SOUTH PARK, PA 15129

DESCRIPTION PLANT NO. 1 *TEST 2 3-6-03 AM THIMBLE - JEFF*

SAMPLE NUMBER 27

DATE LOGGED *03/10/03*
DATE COMPLETED *03/26/03*
PROJECT NUMBER *1621-87 -*
ANALYTICAL NUMBER 030584

ANALYSIS REPORT

MISC. (As Det.)	
LOI	95.60
Hg	0.24 ng/mg

ULTIMATE (As Det)%	
Carbon	3.52

MAJOR ASH ELEM (As Det)%	
SiO2	51.71
Al2O3	25.32
TiO2	1.18
Fe2O3	10.39
CaO	1.82
MgO	1.24
Na2O	0.42
K2O	2.93
P2O5	0.11
SO3	0.55
UND	4.33

DISTRIBUTION:
A. SCHWALB
J. LOCKE

Approved for transmittal _____

CONSOL ENERGY INC.
RESEARCH & DEVELOPMENT
ANALYTICAL LABORATORY
4000 BROWNSVILLE ROAD, SOUTH PARK, PA 15129

DESCRIPTION PLANT NO. 1 *TEST 2 3-6-03 AM 3" FILTER - RON*

SAMPLE NUMBER 34

DATE LOGGED 03/10/03
DATE COMPLETED 04/01/03
PROJECT NUMBER 1621-87 -
ANALYTICAL NUMBER 030585

ANALYSIS REPORT

MISC. (As Det.)	
LOI	NES
Hg	9.5 ng/filter

ULTIMATE (As Det)%	
Carbon	NES

MAJOR ASH ELEM (As Det)%	
SiO2	
Al2O3	
TiO2	
Fe2O3	
CaO	
MgO	
Na2O	
K2O	
P2O5	
SO3	
UND	

NES

*****

DISTRIBUTION:
A. SCHWALB
J. LOCKE

Approved for transmittal _____

CONSOL ENERGY INC.
RESEARCH & DEVELOPMENT
ANALYTICAL LABORATORY
4000 BROWNSVILLE ROAD, SOUTH PARK, PA 15129

DESCRIPTION PLANT NO. 1 *TEST 3 3-6-03 THIMBLE - JIM*

SAMPLE NUMBER 39

DATE LOGGED 03/10/03
DATE COMPLETED 03/26/03
PROJECT NUMBER 1621-87 -
ANALYTICAL NUMBER **030580**

ANALYSIS REPORT

MISC. (As Det.)	
LOI	95.80
Hg	0.007 ng/mg

ULTIMATE (As Det)%	
Carbon	3.52

MAJOR ASH ELEM (As Det)%	
SiO2	51.88
Al2O3	25.37
TiO2	1.17
Fe2O3	10.56
CaO	1.79
MgO	1.24
Na2O	0.42
K2O	2.97
P2O5	0.11
SO3	0.44
UND	4.05

DISTRIBUTION:
A. SCHWALB
J. LOCKE

Approved for transmittal _____

CONSOL ENERGY INC.
RESEARCH & DEVELOPMENT
ANALYTICAL LABORATORY
4000 BROWNSVILLE ROAD, SOUTH PARK, PA 15129

DESCRIPTION PLANT NO. 1 *TEST 3 3-6-03 THIMBLE - JEFF*

SAMPLE NUMBER 46

DATE LOGGED 03/10/03
DATE COMPLETED 03/26/03
PROJECT NUMBER 1621-87 -
ANALYTICAL NUMBER 030581

ANALYSIS REPORT

MISC. (As Det.)	
LOI	96.13
Hg	0.19 ng/mg

ULTIMATE (As Det)%	
Carbon	3.09

MAJOR ASH ELEM (As Det)%	
SiO2	52.06
Al2O3	25.16
TiO2	1.18
Fe2O3	10.15
CaO	1.72
MgO	1.23
Na2O	0.41
K2O	3.01
P2O5	0.11
SO3	0.54
UND	4.43

DISTRIBUTION:
A. SCHWALB
J. LOCKE

Approved for transmittal _____

CONSOL ENERGY INC.
RESEARCH & DEVELOPMENT
ANALYTICAL LABORATORY
4000 BROWNSVILLE ROAD, SOUTH PARK, PA 15129

DESCRIPTION PLANT NO. 1 *TEST 3 3-6-03 3" FILTER - RON*

SAMPLE NUMBER 53

DATE LOGGED 03/10/03
DATE COMPLETED 04/01/03
PROJECT NUMBER 1621-87 -
ANALYTICAL NUMBER 030582

ANALYSIS REPORT

MISC. (As Det.)		ULTIMATE (As Det)%		MAJOR ASH ELEM (As Det)%
LOI	NES	Carbon	NES	SiO2
Hg	10.5 ng/filter			Al2O3
				TiO2
				Fe2O3
				CaO
				MgO
				Na2O
				K2O
				P2O5
				SO3
				UND

NES

*****

DISTRIBUTION:
A. SCHWALB
J. LOCKE

Approved for transmittal _____

CONSOL ENERGY INC.
RESEARCH & DEVELOPMENT
ANALYTICAL LABORATORY
4000 BROWNSVILLE ROAD, SOUTH PARK, PA 15129

DESCRIPTION PLANT NO. 1 *TEST 4 3-7-03 THIMBLE - JIM*

SAMPLE NUMBER 58

DATE LOGGED 03/10/03
DATE COMPLETED 03/26/03
PROJECT NUMBER 1621-87 -
ANALYTICAL NUMBER 030586

ANALYSIS REPORT

MISC. (As Det.)	
LOI	94.87
Hg	<0.005 ng/mg

ULTIMATE (As Det)%	
Carbon	4.96

MAJOR ASH ELEM (As Det)%	
SiO2	55.16
Al2O3	27.56
TiO2	1.22
Fe2O3	5.50
CaO	0.92
MgO	1.07
Na2O	0.27
K2O	3.06
P2O5	0.10
SO3	0.23
UND	4.91

DISTRIBUTION:
A. SCHWALB
J. LOCKE

Approved for transmittal

CONSOL ENERGY INC.
RESEARCH & DEVELOPMENT
ANALYTICAL LABORATORY
4000 BROWNSVILLE ROAD, SOUTH PARK, PA 15129

DESCRIPTION PLANT NO. 1 *√ TEST 4 3-7-03 THIMBLE - JEFF*

SAMPLE NUMBER 65

DATE LOGGED 03/10/03
DATE COMPLETED 03/26/03
PROJECT NUMBER 1621-87 -
ANALYTICAL NUMBER 030587

ANALYSIS REPORT

MISC. (As Det.)	
LOI	94.58
Hg	0.41 ng/mg

ULTIMATE (As Det)%	
Carbon	4.89

MAJOR ASH ELEM (As Det)%	
SiO2	54.88
Al2O3	27.17
TiO2	1.22
Fe2O3	5.52
CaO	0.89
MgO	1.06
Na2O	0.27
K2O	3.08
P2O5	0.10
SO3	0.28
UND	5.53

DISTRIBUTION:
A. SCHWALB
J. LOCKE

Approved for transmittal _____

CONSOL ENERGY INC.
RESEARCH & DEVELOPMENT
ANALYTICAL LABORATORY
4000 BROWNSVILLE ROAD, SOUTH PARK, PA 15129

DESCRIPTION PLANT NO. 1 *I TEST 4 3-7-03 3" FILTER - RON*

SAMPLE NUMBER 72

DATE LOGGED 03/10/03
DATE COMPLETED 04/01/03
PROJECT NUMBER 1621-87 -
ANALYTICAL NUMBER 030588

ANALYSIS REPORT

MISC. (As Det.)	
LOI	NES
Hg	38.0 ng/filter

ULTIMATE (As Det)%	
Carbon	NES

MAJOR ASH ELEM (As Det)%	
SiO2	
Al2O3	
TiO2	
Fe2O3	
CaO	
MgO	
Na2O	
K2O	
P2O5	
SO3	
UND	*****

NES

DISTRIBUTION:
A. SCHWALB
J. LOCKE

Approved for transmittal

CONSOL ENERGY INC.
RESEARCH & DEVELOPMENT
ANALYTICAL LABORATORY
4000 BROWNSVILLE ROAD, SOUTH PARK, PA 15129

DESCRIPTION PLANT NO. 1 *BLANKS SOLIDS 3" FILTER*

SAMPLE NUMBER 89

DATE LOGGED 03/10/03
DATE COMPLETED 04/01/03
PROJECT NUMBER 1621-87 -
ANALYTICAL NUMBER 030590

ANALYSIS REPORT

MISC. (As Det.)

Hg	90.0 ng/filter

DISTRIBUTION:
A. SCHWALB
J. LOCKE

Approved for transmittal _____

APPENDIX D

Process Material Data

- Coal Analysis Data Sheets
- Ash Analysis Data Sheets

CONSOL ENERGY INC.
RESEARCH & DEVELOPMENT
ANALYTICAL LABORATORY
4000 BROWNSVILLE ROAD, SOUTH PARK, PA 15129

DESCRIPTION *COAL PLANT 01*

SAMPLE NUMBER COAL T1

DATE LOGGED *03/17/03*
DATE COMPLETED *03/21/03*
PROJECT NUMBER *1621-87 -*
ANALYTICAL NUMBER **030730**

ANALYSIS REPORT

PROXIMATE	(Dry)%
Ash	9.77
Volatile Matter	35.79
Fixed Carbon	54.44
Sulfur, Total	0.92
BTU/lb	13468
MAF BTU/lb	14926

ULTIMATE	(Dry)%
Carbon	75.65
Hydrogen	4.97
Nitrogen	1.57
Chlorine	0.117
Sulfur, Total	0.92
Ash	9.77
Oxygen (DIFF)	7.00

MAJOR ASH ELEM	%
Ignited at 750 C	
SiO2	54.32
Al2O3	27.16
TiO2	1.26
Fe2O3	7.70
CaO	1.51
MgO	1.29
Na2O	0.50
K2O	3.08
P2O5	0.15
SO3	1.69
UND	1.34

MISC. (As Det.)

MERCURY 0.07 PPM

AS DETERMINED MOISTURE: 1.99 %

DISTRIBUTION:
S. TSENG
J. WITHUM
J. LOCKE

Approved for transmittal _____

CONSOL ENERGY INC.
RESEARCH & DEVELOPMENT
ANALYTICAL LABORATORY
4000 BROWNSVILLE ROAD, SOUTH PARK, PA 15129

DESCRIPTION *COAL PLANT 01*

SAMPLE NUMBER COAL T2

DATE LOGGED *03/17/03*
DATE COMPLETED *03/21/03*
PROJECT NUMBER *1621-87 -*
ANALYTICAL NUMBER **030731**

ANALYSIS REPORT

PROXIMATE	(Dry)%
Ash	9.42
Volatile Matter	37.55
Fixed Carbon	53.03
Sulfur, Total	1.18
BTU/lb	13495
MAF BTU/lb	14898

ULTIMATE	(Dry)%
Carbon	75.56
Hydrogen	4.95
Nitrogen	1.59
Chlorine	0.102
Sulfur, Total	1.18
Ash	9.42
Oxygen (DIFF)	7.20

MAJOR ASH ELEM	%
Ignited at 750 C	
SiO2	52.64
Al2O3	24.95
TiO2	1.04
Fe2O3	11.03
CaO	1.90
MgO	1.22
Na2O	0.44
K2O	2.77
P2O5	0.09
SO3	2.12
UND	1.80

MISC. (As Det.)

MERCURY 0.11 PPM

AS DETERMINED MOISTURE: 1.98 %

DISTRIBUTION:
S. TSENG
J. WITHUM
J. LOCKE

Approved for transmittal _____

CONSOL ENERGY INC.
RESEARCH & DEVELOPMENT
ANALYTICAL LABORATORY
4000 BROWNSVILLE ROAD, SOUTH PARK, PA 15129

DESCRIPTION *COAL PLANT 01*

SAMPLE NUMBER COAL T3

DATE LOGGED *03/17/03*
DATE COMPLETED *03/21/03*
PROJECT NUMBER *1621-87 -*
ANALYTICAL NUMBER **030732**

ANALYSIS REPORT

PROXIMATE	(Dry)%
Ash	9.83
Volatile Matter	37.21
Fixed Carbon	52.96
Sulfur, Total	1.11
BTU/lb	13465
MAF BTU/lb	14933

ULTIMATE	(Dry)%
Carbon	75.30
Hydrogen	4.93
Nitrogen	1.62
Chlorine	0.123
Sulfur, Total	1.11
Ash	9.83
Oxygen (DIFF)	7.09

MAJOR ASH ELEM	%
Ignited at 750 C	
SiO2	52.97
Al2O3	25.49
TiO2	1.04
Fe2O3	9.78
CaO	1.69
MgO	1.30
Na2O	0.45
K2O	2.97
P2O5	0.10
SO3	1.88
UND	2.33

MISC. (As Det.)

MERCURY 0.09 PPM

AS DETERMINED MOISTURE: 2.07 %

DISTRIBUTION:
S. TSENG
J. WITHUM
J. LOCKE

Approved for transmittal _____

CONSOL ENERGY INC.
RESEARCH & DEVELOPMENT
ANALYTICAL LABORATORY
4000 BROWNSVILLE ROAD, SOUTH PARK, PA 15129

DESCRIPTION *COAL PLANT 01*

SAMPLE NUMBER COAL T4

DATE LOGGED *03/17/03*
DATE COMPLETED *03/21/03*
PROJECT NUMBER *1621-87 -*
ANALYTICAL NUMBER 030733

ANALYSIS REPORT

PROXIMATE	(Dry)%
Ash	11.33
Volatile Matter	35.69
Fixed Carbon	52.98
Sulfur, Total	0.85
BTU/lb	13134
MAF BTU/lb	14812

ULTIMATE	(Dry)%
Carbon	74.05
Hydrogen	4.75
Nitrogen	1.48
Chlorine	0.072
Sulfur, Total	0.85
Ash	11.33
Oxygen (DIFF)	7.47

MAJOR ASH ELEM	%
Ignited at 750 C	
SiO2	57.26
Al2O3	28.04
TiO2	1.10
Fe2O3	5.81
CaO	0.98
MgO	1.14
Na2O	0.33
K2O	3.08
P2O5	0.10
SO3	0.98
UND	1.18

MISC. (As Det.)

MERCURY 0.09

AS DETERMINED MOISTURE: 2.19 %

DISTRIBUTION:
S. TSENG
J. WITHUM
J. LOCKE

Approved for transmittal _____

CONSOL ENERGY INC.
RESEARCH & DEVELOPMENT
ANALYTICAL LABORATORY
4000 BROWNSVILLE ROAD, SOUTH PARK, PA 15129

DESCRIPTION *RE-ANALYSIS OF COAL T1 (030730)* PLANT NO. 1

SAMPLE NUMBER COAL T1

DATE LOGGED *10/08/03*
DATE COMPLETED *10/14/03*
PROJECT NUMBER *1621-87 -*
ANALYTICAL NUMBER 033301

ANALYSIS REPORT

MISC. (As Det.)

Hg	0.05 PPM

DISTRIBUTION:
S. TSENG
J. WITHUM
J. LOCKE

Approved for transmittal _____

CONSOL ENERGY INC.
RESEARCH & DEVELOPMENT
ANALYTICAL LABORATORY
4000 BROWNSVILLE ROAD, SOUTH PARK, PA 15129

DESCRIPTION *RE-ANALYSIS OF COAL T2 (030731)* **PLANT NO. 1**

SAMPLE NUMBER COAL T2

DATE LOGGED *10/08/03*
DATE COMPLETED *10/14/03*
PROJECT NUMBER *1621-87 -*
ANALYTICAL NUMBER **033302**

ANALYSIS REPORT

MISC. (As Det.)

Hg	0.10 PPM

DISTRIBUTION:
S. TSENG
J. WITHUM
J. LOCKE

Approved for transmittal _____

CONSOL ENERGY INC.
RESEARCH & DEVELOPMENT
ANALYTICAL LABORATORY
4000 BROWNSVILLE ROAD, SOUTH PARK, PA 15129

DESCRIPTION *RE-ANALYSIS OF COAL T3 (030732)* **PLANT NO. 1**

SAMPLE NUMBER COAL T3

DATE LOGGED *10/08/03*
DATE COMPLETED *10/14/03*
PROJECT NUMBER *1621-87 -*
ANALYTICAL NUMBER 033303

ANALYSIS REPORT

MISC. (As Det.)

Hg	0.09 PPM

DISTRIBUTION:
S. TSENG
J. WITHUM
J. LOCKE

Approved for transmittal _____

CONSOL ENERGY INC.
RESEARCH & DEVELOPMENT
ANALYTICAL LABORATORY
4000 BROWNSVILLE ROAD, SOUTH PARK, PA 15129

DESCRIPTION *RE-ANALYSIS OF COAL T4 (030733)* **PLANT NO. 1**

SAMPLE NUMBER COAL T4

DATE LOGGED *10/08/03*
DATE COMPLETED *10/14/03*
PROJECT NUMBER *1621-87 -*
ANALYTICAL NUMBER **033304**

ANALYSIS REPORT

MISC. (As Det.)

Hg	0.07 PPM

DISTRIBUTION:
S. TSENG
J. WITHUM
J. LOCKE

Approved for transmittal _____

CONSOL ENERGY INC.
RESEARCH & DEVELOPMENT
ANALYTICAL LABORATORY
4000 BROWNSVILLE ROAD, SOUTH PARK, PA 15129

DESCRIPTION *BOTTOM ASH PLANT 01*

SAMPLE NUMBER T1

DATE LOGGED *03/17/03*
DATE COMPLETED *03/25/03*
PROJECT NUMBER *1621-87 -*
ANALYTICAL NUMBER 030759

ANALYSIS REPORT

PROXIMATE	(Dry)%
Ash	93.92
Total Sulfur	0.16

MISC. (As Det.)	
CO3 as C	0.06 %
MERCURY	0.02 ppm

ULTIMATE	(Dry)%
Carbon	5.67
Chlorine	0.085
Ash	93.92

MAJOR ASH ELEM	(Dry)%
SiO2	53.62
Al2O3	23.31
TiO2	1.24
Fe2O3	8.69
CaO	1.81
MgO	0.92
Na2O	0.49
K2O	2.07
P2O5	0.11
SO3	0.41
UND	7.33

AS DETERMINED MOISTURE: 0.22 %

DISTRIBUTION:
S. TSENG
J. WITHUM
J. LOCKE

Approved for transmittal _____

CONSOL ENERGY INC.
RESEARCH & DEVELOPMENT
ANALYTICAL LABORATORY
4000 BROWNSVILLE ROAD, SOUTH PARK, PA 15129

DESCRIPTION *BOTTOM ASH PLANT 01*

SAMPLE NUMBER T2

DATE LOGGED *03/17/03*
DATE COMPLETED *03/21/03*
PROJECT NUMBER *1621-87 -*
ANALYTICAL NUMBER 030760

ANALYSIS REPORT

PROXIMATE	(Dry)%
Ash	98.01
Total Sulfur	0.08

MISC. (As Det.)	
CO3 as C	0.04 %
MERCURY	0.01 ppm

ULTIMATE	(Dry)%
Carbon	2.11
Chlorine	0.060
Ash	98.01

MAJOR ASH ELEM	(Dry)%
SiO2	55.29
Al2O3	21.23
TiO2	1.01
Fe2O3	12.73
CaO	1.79
MgO	0.87
Na2O	0.42
K2O	1.95
P2O5	0.10
SO3	0.21
UND	4.40

AS DETERMINED MOISTURE: 0.08 %

DISTRIBUTION:
S. TSENG
J. WITHUM
J. LOCKE

Approved for transmittal: _____

CONSOL ENERGY INC.
RESEARCH & DEVELOPMENT
ANALYTICAL LABORATORY
4000 BROWNSVILLE ROAD, SOUTH PARK, PA 15129

DESCRIPTION *BOTTOM ASH PLANT 01*

SAMPLE NUMBER T3

DATE LOGGED *03/17/03*
DATE COMPLETED *03/21/03*
PROJECT NUMBER *1621-87 -*
ANALYTICAL NUMBER 030761

ANALYSIS REPORT

PROXIMATE	(Dry)%
Ash	96.76
Total Sulfur	0.12

MISC. (As Det.)	
CO3 as C	0.06 %
MERCURY	0.02 ppm

ULTIMATE	(Dry)%
Carbon	3.41
Chlorine	0.050
Ash	96.76

MAJOR ASH ELEM	(Dry)%
SiO2	56.67
Al2O3	20.59
TiO2	0.95
Fe2O3	12.48
CaO	1.75
MgO	0.83
Na2O	0.43
K2O	1.94
P2O5	0.08
SO3	0.30
UND	3.98

AS DETERMINED MOISTURE: 0.25 %

DISTRIBUTION:
S. TSENG
J. WITHUM
J. LOCKE

Approved for transmittal _____

CONSOL ENERGY INC.
RESEARCH & DEVELOPMENT
ANALYTICAL LABORATORY
4000 BROWNSVILLE ROAD, SOUTH PARK, PA 15129

DESCRIPTION *BOTTOM ASH PLANT 01*

SAMPLE NUMBER T4

DATE LOGGED *03/17/03*
DATE COMPLETED *03/21/03*
PROJECT NUMBER *1621-87 -*
ANALYTICAL NUMBER 030762

ANALYSIS REPORT

PROXIMATE	(Dry)%
Ash	96.81
Total Sulfur	0.06

MISC. (As Det.)	
CO3 as C	0.04%
MERCURY	0.02 ppm

ULTIMATE	(Dry)%
Carbon	2.50
Chlorine	0.040
Ash	96.81

MAJOR ASH ELEM	(Dry)%
SiO2	58.44
Al2O3	26.17
TiO2	1.21
Fe2O3	6.58
CaO	1.00
MgO	0.91
Na2O	0.30
K2O	2.54
P2O5	0.07
SO3	0.15
UND	2.63

AS DETERMINED MOISTURE: 0.24 %

DISTRIBUTION:
S. TSENG
J. WITHUM
J. LOCKE

Approved for transmittal _____

CONSOL ENERGY INC.
RESEARCH & DEVELOPMENT
ANALYTICAL LABORATORY
SOUTH PARK, PENNSYLVANIA 15129

TO: S. TSENG

PROJECT NUMBER 1621-87 -

DATE LOGGED 03/17/03
DATE COMPLETED 03/25/03

DESCRIPTION LIME SLURRY (FILTRATE) PLANT 01
SAMPLE NUMBER T1
ANALYTICAL NUMBER 030763

	-------- WATER ANALYSIS ---------			
ANALYSIS	UNITS	VALUE	VALUE	DUP AVG
Total Diss. Solids				
Calcium				
Magnesium				
Potassium				
Sodium				
Chloride				
Sulfate				
MERCURY	ng/ml	<1.0		

Note: All units mg/L unless specified

CONSOL ENERGY INC.
RESEARCH & DEVELOPMENT
ANALYTICAL LABORATORY
4000 BROWNSVILLE ROAD, SOUTH PARK, PA 15129

DESCRIPTION *LIME SLURRY PLANT 1 (SOLIDS)*

SAMPLE NUMBER T1

DATE LOGGED *03/17/03*
DATE COMPLETED *03/25/03*
PROJECT NUMBER *1621-87 -*
ANALYTICAL NUMBER **030754**

ANALYSIS REPORT

PROXIMATE	(Dry)%
Sulfur, Total	74.19

ULTIMATE	(Dry)%
Chlorine	<0.02
Sulfur, Total	74.19

MAJOR ASH ELEM	(Dry)%
SiO2	0.76
Al2O3	0.21
TiO2	0.01
Fe2O3	0.10
CaO	72.58
MgO	1.22
Na2O	0.02
K2O	0.04
P2O5	0.01
SO3	0.13
UND	24.92

MISC. (As Det.)

CO3 as C	0.90 %
%SOLIDS	17.4
MERCURY	0.02 ppm
[redacted]	

AS DETERMINED MOISTURE: 5.74 %

DISTRIBUTION:
S. TSENG
J. WITHUM
J. LOCKE

Approved for transmittal _____

CONSOL ENERGY INC.
RESEARCH & DEVELOPMENT
ANALYTICAL LABORATORY
SOUTH PARK, PENNSYLVANIA 15129

TO: S. TSENG

PROJECT NUMBER 1621-87 -

DATE LOGGED 03/17/03
DATE COMPLETED / /

DESCRIPTION LIME SLURRY (FILTRATE) PLANT 01
SAMPLE NUMBER T2
ANALYTICAL NUMBER 030764

ANALYSIS	UNITS	WATER ANALYSIS VALUE	VALUE	DUP AVG
Total Diss. Solids				
Calcium				
Magnesium				
Potassium				
Sodium				
Chloride				
Sulfate				
MERCURY	ng/ml	<1.0		

Note: All units mg/L unless specified

CONSOL ENERGY INC.
RESEARCH & DEVELOPMENT
ANALYTICAL LABORATORY
4000 BROWNSVILLE ROAD, SOUTH PARK, PA 15129

DESCRIPTION *LIME SLURRY PLANT 01 (SOLIDS)*

SAMPLE NUMBER T2

DATE LOGGED *03/17/03*
DATE COMPLETED *03/25/03*
PROJECT NUMBER *1621-87 -*
ANALYTICAL NUMBER 030755

ANALYSIS REPORT

PROXIMATE (As Det)%		ULTIMATE (As Det)%		MAJOR ASH ELEM (As Det)%	
Total Sulfur	0.03			SiO2	0.67
				Al2O3	0.18
MISC. (As Det.)				TiO2	0.01
				Fe2O3	0.07
CO3 as C	0.82%			CaO	68.26
%SOLIDS	19.1 dry basis			MgO	1.27
MERCURY	0.02 ppm			Na2O	0.02
[redacted]				K2O	0.04
				P2O5	<0.01
				SO3	0.08
				UND	29.40

DISTRIBUTION:
S. TSENG
J. WITHUM
J. LOCKE

Approved for transmittal _____

CONSOL ENERGY INC.
RESEARCH & DEVELOPMENT
ANALYTICAL LABORATORY
SOUTH PARK, PENNSYLVANIA 15129

TO: S. TSENG

PROJECT NUMBER 1621-87 -

DATE LOGGED 03/17/03
DATE COMPLETED / /

DESCRIPTION LIME SLURRY (FILTRATE) PLANT 01
SAMPLE NUMBER T3
ANALYTICAL NUMBER 030765

ANALYSIS	UNITS	WATER ANALYSIS VALUE	VALUE	DUP AVG
Total Diss. Solids				
Calcium				
Magnesium				
Potassium				
Sodium				
Chloride				
Sulfate				
MERCURY	ng/ml	<1.0		

Note: All units mg/L unless specified

CONSOL ENERGY INC.
RESEARCH & DEVELOPMENT
ANALYTICAL LABORATORY
4000 BROWNSVILLE ROAD, SOUTH PARK, PA 15129

DESCRIPTION *LIME SLURRY PLANT 01 (SOLIDS)*

SAMPLE NUMBER T3

DATE LOGGED *03/17/03*
DATE COMPLETED *03/25/03*
PROJECT NUMBER *1621-87 -*
ANALYTICAL NUMBER **030756**

ANALYSIS REPORT

PROXIMATE (As Det)%		ULTIMATE (As Det)%	MAJOR ASH ELEM (As Det)%	
Total Sulfur	0.04		SiO2	0.67
			Al2O3	0.20
MISC. (As Det.)			TiO2	0.01
			Fe2O3	0.08
CO3 as C	0.96%		CaO	71.18
%SOLIDS	16.1 – dry basis		MgO	1.39
MERCURY	0.02 ppm		Na2O	0.01
[redacted]			K2O	0.04
			P2O5	<0.01
			SO3	0.10
			UND	26.32

DISTRIBUTION:
S. TSENG
J. WITHUM
J. LOCKE

Approved for transmittal _____

CONSOL ENERGY INC.
RESEARCH & DEVELOPMENT
ANALYTICAL LABORATORY
SOUTH PARK, PENNSYLVANIA 15129

TO: S. TSENG

PROJECT NUMBER 1621-87 -

DATE LOGGED 03/17/03
DATE COMPLETED / /

DESCRIPTION LIME SLURRY (FILTRATE) PLANT 01
SAMPLE NUMBER T4
ANALYTICAL NUMBER 030766

	-------- WATER ANALYSIS ---------			
ANALYSIS	UNITS	VALUE	VALUE	DUP AVG
Total Diss. Solids				
Calcium				
Magnesium				
Potassium				
Sodium				
Chloride				
Sulfate				
MERCURY	ng/ml	<1.0		

Note: All units mg/L unless specified

CONSOL ENERGY INC.
RESEARCH & DEVELOPMENT
ANALYTICAL LABORATORY
4000 BROWNSVILLE ROAD, SOUTH PARK, PA 15129

DESCRIPTION *LIME SLURRY PLANT 01 (SOLIDS)*

SAMPLE NUMBER T4

DATE LOGGED *03/17/03*
DATE COMPLETED *03/25/03*
PROJECT NUMBER *1621-87 -*
ANALYTICAL NUMBER 030758

ANALYSIS REPORT

PROXIMATE	(Dry)%
Ash	72.06
Total Sulfur	0.02

ULTIMATE	(Dry)%
Chlorine	<0.02
Ash	72.06

MAJOR ASH ELEM	(Dry)%
SiO2	0.76
Al2O3	0.20
TiO2	0.01
Fe2O3	0.08
CaO	72.10
MgO	1.45
Na2O	0.03
K2O	0.05
P2O5	<0.01
SO3	0.06
UND	25.26

MISC. (As Det.)

CO3 as C	1.34%
MERCURY	0.02 ppm
%SOLIDS	% 14.4 – dry Basis
[redacted]	

AS DETERMINED MOISTURE: 1.28 %

DISTRIBUTION:
S. TSENG
J. WITHUM
J. LOCKE

Approved for transmittal _____

CONSOL ENERGY INC.
RESEARCH & DEVELOPMENT
ANALYTICAL LABORATORY
4000 BROWNSVILLE ROAD, SOUTH PARK, PA 15129

DESCRIPTION *BAGHOUSE HOPPER ASH PLANT 01*

SAMPLE NUMBER BHA-T1-1

DATE LOGGED *03/17/03*
DATE COMPLETED 03/21/03
PROJECT NUMBER 1621-87 -
ANALYTICAL NUMBER 030734

ANALYSIS REPORT

PROXIMATE	(Dry)%
Ash	88.37
Total Sulfur	3.54

MISC. (As Det.)	
CO3 as C	0.50 %
MERCURY	0.32 ppm

ULTIMATE	(Dry)%
Carbon	6.76
Chlorine	0.546
Ash	88.37

MAJOR ASH ELEM	(Dry)%
SiO2	31.26
Al2O3	13.93
TiO2	0.66
Fe2O3	7.79
CaO	20.73
MgO	1.01
Na2O	0.51
K2O	1.43
P2O5	0.07
SO3	8.84
UND	13.77

AS DETERMINED MOISTURE: 1.06 %

DISTRIBUTION:
S. TSENG
J. WITHUM
J. LOCKE

Approved for transmittal _____

CONSOL ENERGY INC.
RESEARCH & DEVELOPMENT
ANALYTICAL LABORATORY
4000 BROWNSVILLE ROAD, SOUTH PARK, PA 15129

DESCRIPTION *BAGHOUSE HOPPER ASH PLANT 01*

SAMPLE NUMBER BHA-T1-2

DATE LOGGED *03/17/03*
DATE COMPLETED 03/21/03
PROJECT NUMBER 1621-87 -
ANALYTICAL NUMBER 030735

ANALYSIS REPORT

PROXIMATE	(Dry)%
Ash	88.06
Total Sulfur	4.31

ULTIMATE	(Dry)%
Carbon	8.31
Chlorine	0.747
Ash	88.06

MAJOR ASH ELEM	(Dry)%
SiO2	34.19
Al2O3	17.29
TiO2	0.79
Fe2O3	3.85
CaO	16.16
MgO	1.04
Na2O	0.53
K2O	2.01
P2O5	0.06
SO3	10.77
UND	13.31

MISC. (As Det.)

CO3 as C	0.68 %
MERCURY	0.43 ppm

AS DETERMINED MOISTURE: 0.30 %

DISTRIBUTION:
S. TSENG
J. WITHUM
J. LOCKE

Approved for transmittal _____

CONSOL ENERGY INC.
RESEARCH & DEVELOPMENT
ANALYTICAL LABORATORY
4000 BROWNSVILLE ROAD, SOUTH PARK, PA 15129

DESCRIPTION *BAGHOUSE HOPPER ASH PLANT 01*

SAMPLE NUMBER BHA-T2-1

DATE LOGGED *03/17/03*
DATE COMPLETED 03/21/03
PROJECT NUMBER 1621-87 -
ANALYTICAL NUMBER 030736

ANALYSIS REPORT

PROXIMATE	(Dry)%
Ash	90.19
Total Sulfur	5.10

MISC. (As Det.)	
CO3 as C	0.58%
MERCURY	0.55 ppm

ULTIMATE	(Dry)%
Carbon	2.10
Chlorine	0.274
Ash	90.19

MAJOR ASH ELEM	(Dry)%
SiO2	23.07
Al2O3	11.08
TiO2	0.49
Fe2O3	4.93
CaO	33.02
MgO	1.17
Na2O	0.36
K2O	1.22
P2O5	0.03
SO3	12.76
UND	11.87

AS DETERMINED MOISTURE: 1.31 %

DISTRIBUTION:
S. TSENG
J. WITHUM
J. LOCKE

Approved for transmittal _____

CONSOL ENERGY INC.
RESEARCH & DEVELOPMENT
ANALYTICAL LABORATORY
4000 BROWNSVILLE ROAD, SOUTH PARK, PA 15129

DESCRIPTION *BAGHOUSE HOPPER ASH PLANT 01*

SAMPLE NUMBER BHA-T2-2

DATE LOGGED *03/17/03*
DATE COMPLETED 03/21/03
PROJECT NUMBER 1621-87 -
ANALYTICAL NUMBER 030737

ANALYSIS REPORT

PROXIMATE	(Dry)%
Ash	89.20
Total Sulfur	4.74

MISC. (As Det.)	
CO3 as C	0.60%
MERCURY	0.46 ppm

ULTIMATE	(Dry)%
Carbon	2.03
Chlorine	0.294
Ash	89.20

MAJOR ASH ELEM	(Dry)%
SiO2	22.11
Al2O3	10.21
TiO2	0.44
Fe2O3	4.85
CaO	35.51
MgO	1.19
Na2O	0.40
K2O	1.10
P2O5	0.03
SO3	11.84
UND	12.32

AS DETERMINED MOISTURE: 1.46 %

DISTRIBUTION:
S. TSENG
J. WITHUM
J. LOCKE

Approved for transmittal _____

CONSOL ENERGY INC.
RESEARCH & DEVELOPMENT
ANALYTICAL LABORATORY
4000 BROWNSVILLE ROAD, SOUTH PARK, PA 15129

DESCRIPTION *BAGHOUSE HOPPER ASH PLANT 01*

SAMPLE NUMBER BHA-T2-3

DATE LOGGED *03/17/03*
DATE COMPLETED 03/21/03
PROJECT NUMBER 1621-87 -
ANALYTICAL NUMBER 030738

ANALYSIS REPORT

PROXIMATE	(Dry)%
Ash	88.99
Total Sulfur	4.32

MISC. (As Det.)	
CARBONAT	0.62%
MERCURY	0.42 ppm

ULTIMATE	(Dry)%
Carbon	2.15
Chlorine	0.253
Ash	88.99

MAJOR ASH ELEM	(Dry)%
SiO2	22.64
Al2O3	10.13
TiO2	0.43
Fe2O3	5.28
CaO	35.31
MgO	1.22
Na2O	0.37
K2O	1.10
P2O5	0.03
SO3	10.79
UND	12.70

AS DETERMINED MOISTURE: 1.33 %

DISTRIBUTION:
S. TSENG
J. WITHUM
J. LOCKE

Approved for transmittal _____

CONSOL ENERGY INC.
RESEARCH & DEVELOPMENT
ANALYTICAL LABORATORY
4000 BROWNSVILLE ROAD, SOUTH PARK, PA 15129

DESCRIPTION *BAGHOUSE HOPPER ASH PLANT 01*

SAMPLE NUMBER BHA-T2-4

DATE LOGGED *03/17/03*
DATE COMPLETED 03/21/03
PROJECT NUMBER 1621-87 -
ANALYTICAL NUMBER **030739**

ANALYSIS REPORT

PROXIMATE	(Dry)%
Ash	89.19
Total Sulfur	4.59

MISC. (As Det.)	
CO3 as C	0.66 %
MERCURY	0.47 ppm

ULTIMATE	(Dry)%
Carbon	7.42
Chlorine	0.274
Ash	89.19

MAJOR ASH ELEM	(Dry)%
SiO2	22.42
Al2O3	10.51
TiO2	0.45
Fe2O3	4.99
CaO	34.88
MgO	1.21
Na2O	0.42
K2O	1.13
P2O5	0.03
SO3	11.48
UND	12.48

AS DETERMINED MOISTURE: 1.32 %

DISTRIBUTION:
S. TSENG
J. WITHUM
J. LOCKE

Approved for transmittal _____

CONSOL ENERGY INC.
RESEARCH & DEVELOPMENT
ANALYTICAL LABORATORY
4000 BROWNSVILLE ROAD, SOUTH PARK, PA 15129

DESCRIPTION *BAGHOUSE HOPPER ASH PLANT 01*

SAMPLE NUMBER BHA-T2-5

DATE LOGGED *03/17/03*
DATE COMPLETED 03/21/03
PROJECT NUMBER 1621-87 -
ANALYTICAL NUMBER 030740

ANALYSIS REPORT

PROXIMATE	(Dry)%
Ash	87.83
Total Sulfur	5.35

MISC. (As Det.)	
CO3 as C	0.84 %
MERCURY	0.48 ppm

ULTIMATE	(Dry)%
Carbon	7.75
Chlorine	1.102
Ash	87.83

MAJOR ASH ELEM	(Dry)%
SiO2	26.80
Al2O3	13.92
TiO2	0.62
Fe2O3	4.30
CaO	22.21
MgO	1.11
Na2O	0.78
K2O	1.63
P2O5	0.07
SO3	13.37
UND	15.19

AS DETERMINED MOISTURE: 0.61 %

DISTRIBUTION:
S. TSENG
J. WITHUM
J. LOCKE

Approved for transmittal _____

CONSOL ENERGY INC.
RESEARCH & DEVELOPMENT
ANALYTICAL LABORATORY
4000 BROWNSVILLE ROAD, SOUTH PARK, PA 15129

DESCRIPTION *BAGHOUSE HOPPER ASH PLANT 01*

SAMPLE NUMBER BHA-T2-6

DATE LOGGED *03/17/03*
DATE COMPLETED 03/21/03
PROJECT NUMBER 1621-87 -
ANALYTICAL NUMBER 030741

ANALYSIS REPORT

PROXIMATE	(Dry)%
Ash	89.63
Total Sulfur	5.14

MISC. (As Det.)	
CO3 as C	0.60 %
MERCURY	0.52 ppm

ULTIMATE	(Dry)%
Carbon	2.30
Chlorine	0.528
Ash	89.63

MAJOR ASH ELEM	(Dry)%
SiO2	21.67
Al2O3	10.36
TiO2	0.45
Fe2O3	4.53
CaO	34.76
MgO	1.18
Na2O	0.46
K2O	1.11
P2O5	0.03
SO3	12.85
UND	12.60

AS DETERMINED MOISTURE: 1.46 %

DISTRIBUTION:
S. TSENG
J. WITHUM
J. LOCKE

Approved for transmittal _____

CONSOL ENERGY INC.
RESEARCH & DEVELOPMENT
ANALYTICAL LABORATORY
4000 BROWNSVILLE ROAD, SOUTH PARK, PA 15129

DESCRIPTION *BAGHOUSE HOPPER ASH PLANT 01*

SAMPLE NUMBER BHA-T3-1

DATE LOGGED 03/17/03
DATE COMPLETED 03/21/03
PROJECT NUMBER 1621-87 -
ANALYTICAL NUMBER 030742

ANALYSIS REPORT

PROXIMATE	(Dry)%
Ash	92.86
Total Sulfur	3.68

MISC. (As Det.)	
CO3 as C	0.40 %
MERCURY	0.36 ppm

ULTIMATE	(Dry)%
Carbon	1.96
Chlorine	0.476
Ash	92.86

MAJOR ASH ELEM	(Dry)%
SiO2	31.23
Al2O3	15.23
TiO2	0.70
Fe2O3	6.83
CaO	23.71
MgO	1.16
Na2O	0.40
K2O	1.64
P2O5	0.05
SO3	9.20
UND	9.85

AS DETERMINED MOISTURE: 1.17 %

DISTRIBUTION:
S. TSENG
J. WITHUM
J. LOCKE

Approved for transmittal _____

CONSOL ENERGY INC.
RESEARCH & DEVELOPMENT
ANALYTICAL LABORATORY
4000 BROWNSVILLE ROAD, SOUTH PARK, PA 15129

DESCRIPTION *BAGHOUSE HOPPER ASH PLANT 01*

SAMPLE NUMBER BHA-T3-2

DATE LOGGED *03/17/03*
DATE COMPLETED 03/21/03
PROJECT NUMBER 1621-87 -
ANALYTICAL NUMBER 030743

ANALYSIS REPORT

PROXIMATE	(Dry)%
Ash	92.38
Total Sulfur	3.25

MISC. (As Det.)	
CO3 as C	0.38 %
MERCURY	0.30 % ppm

ULTIMATE	(Dry)%
Carbon	2.19
Chlorine	0.233
Ash	92.38

MAJOR ASH ELEM	(Dry)%
SiO2	32.38
Al2O3	15.53
TiO2	0.71
Fe2O3	6.86
CaO	23.58
MgO	1.17
Na2O	0.43
K2O	1.67
P2O5	0.06
SO3	8.12
UND	9.49

AS DETERMINED MOISTURE: 1.09 %

DISTRIBUTION:
S. TSENG
J. WITHUM
J. LOCKE

Approved for transmittal _____

CONSOL ENERGY INC.
RESEARCH & DEVELOPMENT
ANALYTICAL LABORATORY
4000 BROWNSVILLE ROAD, SOUTH PARK, PA 15129

DESCRIPTION *BAGHOUSE HOPPER ASH PLANT 01*

SAMPLE NUMBER BHA-T3-3

DATE LOGGED *03/17/03*
DATE COMPLETED 03/21/03
PROJECT NUMBER 1621-87 -
ANALYTICAL NUMBER **030744**

ANALYSIS REPORT

PROXIMATE	(Dry)%
Ash	92.01
Total Sulfur	3.10

MISC. (As Det.)	
CO3 as C	0.41%
MERCURY	0.29 ppm

ULTIMATE	(Dry)%
Carbon	2.32
Chlorine	0.293
Ash	92.01

MAJOR ASH ELEM	(Dry)%
SiO2	32.49
Al2O3	14.72
TiO2	0.66
Fe2O3	7.42
CaO	24.34
MgO	1.16
Na2O	0.40
K2O	1.56
P2O5	0.06
SO3	7.76
UND	9.43

AS DETERMINED MOISTURE: 1.05 %

DISTRIBUTION:
S. TSENG
J. WITHUM
J. LOCKE

Approved for transmittal _____

CONSOL ENERGY INC.
RESEARCH & DEVELOPMENT
ANALYTICAL LABORATORY
4000 BROWNSVILLE ROAD, SOUTH PARK, PA 15129

DESCRIPTION *BAGHOUSE HOPPER ASH PLANT 01*

SAMPLE NUMBER BHA-T3-4

DATE LOGGED *03/17/03*
DATE COMPLETED 03/21/03
PROJECT NUMBER 1621-87 -
ANALYTICAL NUMBER 030745

ANALYSIS REPORT

PROXIMATE	(Dry)%
Ash	91.61
Total Sulfur	3.28

MISC. (As Det.)	
CO3 as C	0.44%
MERCURY	0.32 ppm

ULTIMATE	(Dry)%
Carbon	2.50
Chlorine	0.313
Ash	91.61

MAJOR ASH ELEM	(Dry)%
SiO2	31.87
Al2O3	14.60
TiO2	0.65
Fe2O3	6.83
CaO	25.27
MgO	1.17
Na2O	0.41
K2O	1.56
P2O5	0.05
SO3	8.21
UND	9.38

AS DETERMINED MOISTURE: 1.07 %

DISTRIBUTION:
S. TSENG
J. WITHUM
J. LOCKE

Approved for transmittal _____

CONSOL ENERGY INC.
RESEARCH & DEVELOPMENT
ANALYTICAL LABORATORY
4000 BROWNSVILLE ROAD, SOUTH PARK, PA 15129

DESCRIPTION *BAGHOUSE HOPPER ASH PLANT 01*

SAMPLE NUMBER BHA-T3-5

DATE LOGGED *03/17/03*
DATE COMPLETED 03/21/03
PROJECT NUMBER 1621-87 -
ANALYTICAL NUMBER 030746

ANALYSIS REPORT

PROXIMATE	(Dry)%
Ash	85.94
Total Sulfur	5.53

MISC. (As Det.)	
CO3 as C	0.83 %
MERCURY	0.42 ppm

ULTIMATE	(Dry)%
Carbon	9.75
Chlorine	1.478
Ash	85.94

MAJOR ASH ELEM	(Dry)%
SiO2	26.49
Al2O3	14.03
TiO2	0.63
Fe2O3	4.00
CaO	21.29
MgO	1.15
Na2O	0.85
K2O	1.68
P2O5	0.09
SO3	13.82
UND	15.97

AS DETERMINED MOISTURE: 0.56 %

DISTRIBUTION:
S. TSENG
J. WITHUM
J. LOCKE

Approved for transmittal _____

CONSOL ENERGY INC.
RESEARCH & DEVELOPMENT
ANALYTICAL LABORATORY
4000 BROWNSVILLE ROAD, SOUTH PARK, PA 15129

DESCRIPTION *BAGHOUSE HOPPER ASH PLANT 01*

SAMPLE NUMBER BHA-T3-6

DATE LOGGED *03/17/03*
DATE COMPLETED 03/21/03
PROJECT NUMBER 1621-87 -
ANALYTICAL NUMBER **030747**

ANALYSIS REPORT

PROXIMATE	(Dry)%
Ash	91.36
Total Sulfur	4.32

MISC. (As Det.)	
CO3 as C	0.47 %
MERCURY	0.44 ppm

ULTIMATE	(Dry)%
Carbon	2.58
Chlorine	0.385
Ash	91.36

MAJOR ASH ELEM	(Dry)%
SiO2	27.93
Al2O3	13.47
TiO2	0.61
Fe2O3	5.96
CaO	28.27
MgO	1.19
Na2O	0.44
K2O	1.50
P2O5	0.04
SO3	10.81
UND	9.78

AS DETERMINED MOISTURE: 1.31 %

DISTRIBUTION:
S. TSENG
J. WITHUM
J. LOCKE

Approved for transmittal _____

CONSOL ENERGY INC.
RESEARCH & DEVELOPMENT
ANALYTICAL LABORATORY
4000 BROWNSVILLE ROAD, SOUTH PARK, PA 15129

DESCRIPTION *BAGHOUSE HOPPER ASH PLANT 01*

SAMPLE NUMBER BHA-T4-1

DATE LOGGED *03/17/03*
DATE COMPLETED *03/21/03*
PROJECT NUMBER *1621-87 -*
ANALYTICAL NUMBER 030748

ANALYSIS REPORT

PROXIMATE	(Dry)%
Ash	91.71
Total Sulfur	3.47

MISC. (As Det.)	
CO3 as C	0.37 %
MERCURY	0.43 ppm

ULTIMATE	(Dry)%
Carbon	4.42
Chlorine	0.464
Ash	91.71

MAJOR ASH ELEM	(Dry)%
SiO2	36.89
Al2O3	17.72
TiO2	0.79
Fe2O3	4.75
CaO	18.40
MgO	1.06
Na2O	0.39
K2O	1.92
P2O5	0.05
SO3	8.67
UND	9.36

AS DETERMINED MOISTURE: 0.93 %

DISTRIBUTION:
S. TSENG
J. WITHUM
J. LOCKE

Approved for transmittal _____

CONSOL ENERGY INC.
RESEARCH & DEVELOPMENT
ANALYTICAL LABORATORY
4000 BROWNSVILLE ROAD, SOUTH PARK, PA 15129

DESCRIPTION *BAGHOUSE HOPPER ASH PLANT 01*

SAMPLE NUMBER BHA-T4-2

DATE LOGGED *03/17/03*
DATE COMPLETED 03/21/03
PROJECT NUMBER 1621-87 -
ANALYTICAL NUMBER 030749

ANALYSIS REPORT

PROXIMATE	(Dry)%
Ash	90.77
Total Sulfur	2.40

MISC. (As Det.)	
CO3 as C	0.41 %
MERCURY	0.30 ppm

ULTIMATE	(Dry)%
Carbon	4.75
Chlorine	0.161
Ash	90.77

MAJOR ASH ELEM	(Dry)%
SiO2	39.34
Al2O3	15.94
TiO2	0.70
Fe2O3	7.66
CaO	18.05
MgO	1.02
Na2O	0.37
K2O	1.73
P2O5	0.05
SO3	5.99
UND	9.15

AS DETERMINED MOISTURE: 0.73 %

DISTRIBUTION:
S. TSENG
J. WITHUM
J. LOCKE

Approved for transmittal _____

CONSOL ENERGY INC.
RESEARCH & DEVELOPMENT
ANALYTICAL LABORATORY
4000 BROWNSVILLE ROAD, SOUTH PARK, PA 15129

DESCRIPTION *BAGHOUSE HOPPER ASH PLANT 01*

SAMPLE NUMBER BHA-T4-3

DATE LOGGED *03/17/03*
DATE COMPLETED 03/21/03
PROJECT NUMBER 1621-87 -
ANALYTICAL NUMBER **030750**

ANALYSIS REPORT

PROXIMATE	(Dry)%
Ash	91.94
Total Sulfur	3.49

MISC. (As Det.)	
CO3 as C	0.38%
MERCURY	0.42 ppm

ULTIMATE	(Dry)%
Carbon	4.43
Chlorine	0.475
Ash	91.94

MAJOR ASH ELEM	(Dry)%
SiO2	35.98
Al2O3	16.83
TiO2	0.76
Fe2O3	4.95
CaO	19.74
MgO	1.10
Na2O	0.37
K2O	1.89
P2O5	0.05
SO3	8.72
UND	9.61

AS DETERMINED MOISTURE: 0.99 %

DISTRIBUTION:
S. TSENG
J. WITHUM
J. LOCKE

Approved for transmittal _____

CONSOL ENERGY INC.
RESEARCH & DEVELOPMENT
ANALYTICAL LABORATORY
4000 BROWNSVILLE ROAD, SOUTH PARK, PA 15129

DESCRIPTION *BAGHOUSE HOPPER ASH PLANT 01*

SAMPLE NUMBER BHA-T4-4

DATE LOGGED 03/17/03
DATE COMPLETED 03/21/03
PROJECT NUMBER 1621-87 -
ANALYTICAL NUMBER 030751

ANALYSIS REPORT

PROXIMATE	(Dry)%
Ash	90.18
Total Sulfur	2.59

ULTIMATE	(Dry)%
Carbon	5.08
Chlorine	0.252
Ash	90.18

MAJOR ASH ELEM	(Dry)%
SiO2	37.52
Al2O3	16.33
TiO2	0.73
Fe2O3	5.52
CaO	19.84
MgO	1.07
Na2O	0.35
K2O	1.77
P2O5	0.05
SO3	6.47
UND	10.35

MISC. (As Det.)

CO3 as C	0.41%
MERCURY	0.32 ppm

AS DETERMINED MOISTURE: 0.75 %

DISTRIBUTION:
S. TSENG
J. WITHUM
J. LOCKE

Approved for transmittal _____

CONSOL ENERGY INC.
RESEARCH & DEVELOPMENT
ANALYTICAL LABORATORY
4000 BROWNSVILLE ROAD, SOUTH PARK, PA 15129

DESCRIPTION *BAGHOUSE HOPPER ASH PLANT 01*

SAMPLE NUMBER BHA-T4-5

DATE LOGGED *03/17/03*
DATE COMPLETED 03/21/03
PROJECT NUMBER 1621-87 -
ANALYTICAL NUMBER 030752

ANALYSIS REPORT

PROXIMATE	(Dry)%
Ash	87.06
Total Sulfur	4.63

MISC. (As Det.)	
CO3 as C	0.83 %
MERCURY	0.38 ppm

ULTIMATE	(Dry)%
Carbon	8.07
Chlorine	0.927
Ash	87.06

MAJOR ASH ELEM	(Dry)%
SiO2	28.79
Al2O3	14.78
TiO2	0.66
Fe2O3	3.76
CaO	21.98
MgO	1.17
Na2O	0.69
K2O	1.74
P2O5	0.07
SO3	11.57
UND	14.79

AS DETERMINED MOISTURE: 0.78 %

DISTRIBUTION:
S. TSENG
J. WITHUM
J. LOCKE

Approved for transmittal _____

CONSOL ENERGY INC.
RESEARCH & DEVELOPMENT
ANALYTICAL LABORATORY
4000 BROWNSVILLE ROAD, SOUTH PARK, PA 15129

DESCRIPTION *BAGHOUSE HOPPER ASH PLANT 01*

SAMPLE NUMBER BHA-T4-6

DATE LOGGED *03/17/03*
DATE COMPLETED 03/21/03
PROJECT NUMBER 1621-87 -
ANALYTICAL NUMBER 030753

ANALYSIS REPORT

PROXIMATE	(Dry)%
Ash	90.71
Total Sulfur	2.82

ULTIMATE	(Dry)%
Carbon	4.26
Chlorine	0.273
Ash	90.71

MAJOR ASH ELEM	(Dry)%
SiO2	36.38
Al2O3	16.14
TiO2	0.71
Fe2O3	6.09
CaO	19.89
MgO	1.06
Na2O	0.36
K2O	1.76
P2O5	0.05
SO3	7.04
UND	10.52

MISC. (As Det.)

CO3 as C	0.43 %
MERCURY	0.35 ppm

AS DETERMINED MOISTURE: 0.98 %

DISTRIBUTION:
S. TSENG
J. WITHUM
J. LOCKE

Approved for transmittal _____

CONSOL ENERGY INC.
RESEARCH & DEVELOPMENT
ANALYTICAL LABORATORY
4000 BROWNSVILLE ROAD, SOUTH PARK, PA 15129

DESCRIPTION *SDA HOPPER ASH PLANT 01*

SAMPLE NUMBER SHA-T4W

DATE LOGGED *03/17/03*
DATE COMPLETED 03/21/03
PROJECT NUMBER 1621-87 -
ANALYTICAL NUMBER **030757**

ANALYSIS REPORT

PROXIMATE	(Dry)%
Ash	83.63
Total Sulfur	1.46

MISC. (As Det.)	
CO3 as C	1.57 %
MERCURY	0.14 ppm

ULTIMATE	(Dry)%
Carbon	2.44
Chlorine	0.091
Ash	83.63

MAJOR ASH ELEM	(Dry)%
SiO2	25.37
Al2O3	5.27
TiO2	0.22
Fe2O3	6.07
CaO	40.94
MgO	1.38
Na2O	0.21
K2O	0.66
P2O5	0.03
SO3	3.65
UND	16.20

AS DETERMINED MOISTURE: 1.28 %

DISTRIBUTION:
S. TSENG
J. WITHUM
J. LOCKE

Approved for transmittal _____