EVALUATION OF MERCURY EMISSIONS FROM COAL-FIRED FACILITIES WITH SCR AND FGD SYSTEMS

Topical Report No. 9 (Plant 7)

U.S. DOE NETL Cooperative Agreement DE-FC26-02NT41589

Issued: January 2006

J. A. Withum
S. C. Tseng
J. E. Locke

CONSOL Energy Inc.,
Research & Development
4000 Brownsville Rd.
South Park, PA 15129
(412) 854-6600

DISCLAIMER

This report was prepared as an account of work sponsored by an agency of the United States Government. Neither the United States Government nor any agency thereof, nor any of their employees, makes any warranty, express or implied, or assumes any legal liability or responsibility for the accuracy, completeness, or usefulness of any information, apparatus, product, or process disclosed, or represents that its use would not infringe privately owned rights. Reference herein to any specific commercial product, process, or service by trade name, trademark, manufacturer, or otherwise does not necessarily constitute or imply its endorsement, recommendation, or favoring by the United States Government or any agency thereof. The views and opinions of authors expressed herein do not necessarily state or reflect those of the United States Government or any agency thereof.

ABSTRACT

CONSOL Energy Inc., Research & Development (CONSOL), with support from the U.S. Department of Energy, National Energy Technology Laboratory (DOE) and the Electric Power Research Institute (EPRI), is evaluating the effects of selective catalytic reduction (SCR) on mercury (Hg) capture in coal-fired plants equipped with an electrostatic precipitator (ESP) - wet flue gas desulfurization (FGD) combination or a spray dyer absorber – fabric filter (SDA-FF) combination. In this program CONSOL is determining mercury speciation and removal at 10 coal-fired facilities. The principal purpose of this work is to develop a better understanding of the potential mercury removal "co-benefits" achieved by NOx, and SO_2 control technologies. It is expected that these data will provide the basis for fundamental scientific insights into the nature of mercury chemistry in flue gas, the catalytic effect of SCR systems on mercury speciation and the efficacy of different FGD technologies for mercury capture. Ultimately, this insight could help to design and operate SCR and FGD systems to maximize mercury removal.

The objectives are 1) to evaluate the effect of SCR on mercury capture in the ESP-FGD and SDA-FF combinations at coal-fired power plants, 2) evaluate the effect of SCR catalyst degradation on mercury capture; 3) evaluate the effect of low load operation on mercury capture in an SCR-FGD system, and 4) collect data that could provide the basis for fundamental scientific insights into the nature of mercury chemistry in flue gas, the catalytic effect of SCR systems on mercury speciation and the efficacy of different FGD technologies for mercury capture.

This document, the ninth in a series of topical reports, describes the results and analysis of mercury sampling performed on Unit 1 at Plant 7, a 566 MW unit burning a bituminous coal containing 3.6% sulfur. The unit is equipped with a SCR, ESP, and wet FGD to control NO_x, particulate, and SO_2 emissions, respectively. Four sampling tests were performed in August 2004 during ozone season with the SCR operating; flue gas mercury speciation and concentrations were determined at the SCR inlet, SCR outlet, air heater outlet (ESP inlet), ESP outlet (FGD inlet), and at the stack (FGD outlet) using the Ontario Hydro method. Three sampling tests were also performed in November 2004 during non-ozone season with the SCR bypassed; flue gas mercury speciation and concentrations were determined at the ESP outlet (FGD inlet), and at the stack (FGD outlet). Process samples for material balances were collected during the flue gas measurements.

The results show that, at the point where the flue gas enters the FGD, a greater percentage of the mercury was in the oxidized form when the SCR was operating compared to when the SCR was bypassed (97% vs 91%). This higher level of oxidation resulted in higher mercury removals in the FGD because the FGD removed 90-94% of the oxidized mercury in both cases. Total coal-to-stack mercury removal was 86% with the SCR operating, and 73% with the SCR bypassed. The average mercury mass balance closure was 81% during the ozone season tests and 87% during the non-ozone season tests.

TABLE OF CONTENTS

Page
ABSTRACT ii
LIST OF FIGURES v
LIST OF TABLES iv
LIST OF APPENDICES v
LIST OF ABBREVIATIONS vi
INTRODUCTION 1
HOST UTILITY DESCRIPTION 1
MERCURY SAMPLING RESULTS 2
I. Test Matrix 2
II. Flue Gas Mercury Sampling Results 3
A. SCR inlet 3
B. SCR outlet 4
C. Air heater outlet 4
D. FGD inlet 5
E. Stack 6
III. SCR/FGD System Hg Removal 7
IV. Mercury Material Balance 8
EXPERIMENTAL AND SAMPLING METHODS 10
I. Flue Gas Sampling Locations and Sampling Points 11
A. SCR inlet 11
B. SCR outlet 11
C. Air heater outlet 12
D. FGD inlet 12
E. Stack 12
II. Flue Gas Mercury Measurements 13
III. Coal Sampling and Analysis 14
A. Coal samples 14
B. Results of analyses of coal samples 15
IV. Process Sample Collection and Analysis 18
A. Bottom ash 18
B. Limestone slurry 19
C. ESP hopper ash 23
D. FGD slurry 33
E. FGD makeup water 38
F. ME wash water samples 39
QUALITY ASSURANCE/QUALITY CONTROL 42
I. Blank Samples 42
II. NIST Standard Reference Material Checks 43
III. Spike Sample Recoveries 43
IV. Duplicate Analyses 43
V. Flue Gas Mercury Concentration Detection Limits 43
VI. Mercury Material Balance Closure 44
VII. Heat input-based mercury emission 46

LIST OF TABLES

Table 1. Coal-fired facilities in program 1
Table 2. Sampling test matrix 3
Table 3. Flue gas mercury speciation at the SCR inlet 4
Table 4. Flue gas mercury speciation at the SCR outlet 4
Table 5. Flue gas mercury speciation at the air heater outlet 5
Table 6a. Flue gas mercury speciation at the FGD inlet (SCR in operation) 5
Table 6b. Flue gas mercury speciation at the FGD inlet (SCR is bypassed) 6
Table 7a. Flue gas mercury speciation at the stack (SCR in operation) 7
Table 7b. Flue gas mercury speciation at the stack (SCR is bypassed) 7
Table 8a. Flue gas mercury removal (with SCR in operation) 8
Table 8b. Flue gas mercury removal (SCR bypassed) 8
Table 9a. Mercury material balance closure (with SCR in operation) 9
Table 9b. Mercury material balance closure (SCR bypassed) 9
Table 12. Mercury speciation by train component 13
Table 13. List of coal samples 15
Table 14. Coal sample analyses – ozone season samples 16
Table 15. Coal sample analyses – non-ozone season samples 17
Table 16a. Results of analyses of bottom ash filtered solids 18
Table 16b. Results of analyses of bottom ash filtrate 19
Table 17. Results of analyses of limestone slurry solids samples – ozone season tests 20
Table 18. Results of analyses of limestone slurry solids samples – non-ozone season tests 21
Table 19. Results of analyses of limestone slurry filtrate samples – ozone season tests 22
Table 20. Results of analyses of limestone slurry filtrate samples – non-ozone season tests 23
Table 21. Results of analyses of ESP hopper ash samples collected in Test 1 24
Table 21. (Continued) 25
Table 22. Results of analyses of ESP hopper ash samples collected in Test 2 26
Table 22. (Continued) 27
Table 23. Results of analyses of ESP hopper ash samples collected in Test 3 28
Table 23. (Continued) 29
Table 24. Results of analyses of ESP hopper ash samples collected in Test 4 30
Table 24. (Continued) 31
Table 24. (Continued) 32
Table 27. Results of analyses of FGD slurry filtrate samples – ozone season tests 36
Table 28. Results of analyses of FGD slurry filtrate samples – non-ozone season tests 37
Table 29. Results of analyses of FGD makeup water samples – ozone season tests 38
Table 30 Results of analyses of FGD makeup water samples – non-ozone season tests 39
Table 33. NIST SRM analyses 43
Table 34. Flue gas mercury detection limits 44
Table 35. Summary of material balance closure for mercury, ozone season tests. 45

Table 36. Summary of material balance closure for mercury, non-ozone season tests. 46
Table 37. Heat input-based mercury emission 47

LIST OF FIGURES

Figure Page
Figure 1. Mercury speciation by location, August 2004 tests (with SCR). 48
Figure 2. Mercury speciation by location, November 2004 tests (no SCR). 48
Figure 3. Process flow schematic and sampling locations 49
Figure 4. SCR inlet mercury sampling train 50
Figure 5. SCR outlet mercury sampling train 51
Figure 6. Air heater outlet mercury sampling train 52
Figure 7. FGD inlet mercury sampling train 53
Figure 8. Stack sampling location 54
Figure 9. Ontario-Hydro sampling train schematic 55
Figure 10. Layout of ESP hoppers 56
Figure 11. ESP ash hopper sampling 57
Figure 12. Ash sampling thief 57
Figure 13. ESP ash mercury vs. carbon plot 58
Figure 14. FGD slurry sampling location 59

LIST OF APPENDICES

APPENDIX A Mercury Sampling Data A-1
APPENDIX B Plant Process Data B-1
APPENDIX C Flue Gas Hg Data C-1
APPENDIX D Process Material Data D-1

LIST OF ABBREVIATIONS

acfm	-	actual cubic feet per minute (wet)
am	-	morning
Btu	-	heating value in British Thermal Units
Ca/S	-	calcium-sulfur ratio
cfm	-	cubic feet per minute
CO_2	-	carbon dioxide
CONSOL R&D	-	CONSOL Energy Inc., Research and Development
CVAA	-	cold vapor atomic absorption
DI	-	deionized water
DOE	-	U.S. Department of Energy
dscf	-	dry standard cubic feet
dscfm	-	dry standard cubic feet per minute
EPA	-	U.S. Environmental Protection Agency
EPRI	-	Electric Power Research Institute
ESP	-	electrostatic precipitator
FGD	-	flue gas desulphurization
ft	-	feet
ft^2	-	square feet
ft^3	-	cubic feet
gm	-	grams
gpm	-	gallons per minute
gr	-	grains
HCl	-	hydrochloric acid
Hg	-	mercury
Hg^{part}	-	mercury in particulate form
Hg^{total}	-	total mercury in particulate, oxidized, and elemental forms
Hg^{++}	-	mercury in oxidized form
Hg^{o}	-	mercury in elemental form
HNO_3	-	nitric acid
HCOF	-	hydroclone overflow
HCUF	-	hydroclone underflow
H_2O	-	water
H_2O_2	-	hydrogen peroxide
hr	-	hour
ICP-AES	-	inductively coupled plasma-atomic emission spectrometer
in	-	inch
KCl	-	potassium chloride
$KMnO_4$	-	potassium permanganate
L	-	liter
lb	-	pound
m	-	meter
m^3	-	cubic meter
ME	-	mist eliminator
mg	-	milligram, 10^{-3} gram

LIST OF ABBREVIATIONS (continued)

min	-	minute
mL	-	milliliter
M	-	molar, mol/L
MM	-	million
mol	-	mole
ng	-	nanogram, 10^{-9} gram
N_2	-	molecular nitrogen
NIST	-	National Institute of Standards and Technology
NO	-	nitric oxide
NO_2	-	nitrogen dioxide
O_2	-	molecular oxygen
O_3	-	ozone
pm	-	afternoon
PM	-	particulate matter
ppb	-	parts per billion (10^9)
ppm	-	parts per million
ppmv	-	parts per million by volume
PRSD	-	percent relative standard deviation
QA	-	quality assurance
QC	-	quality control
rpm	-	revolutions per minute
scf	-	standard cubic feet (68EF and 29.92"Hg)
scfm	-	standard cubic feet per minute
SRM	-	Standard Reference Material
temp	-	temperature
tph	-	tons per hour
TBtu	-	trillion (10^{12}) British thermal unit
wt	-	weight
v	-	volts
vs	-	versus
° F	-	temperature in degrees Fahrenheit
<	-	less than
>	-	more than
µg	-	microgram, 10^{-6} gram

INTRODUCTION

CONSOL Energy Inc. Research and Development (CONSOL R&D) is determining mercury speciation and removal at 10 coal-fired facilities with SCR/FGD combinations (Table 1). CONSOL R&D conducted two series of flue gas mercury (Hg), measurements on Unit 1 at Plant 7 in 2004. During "ozone season," tests were conducted August 17-19 with the plant's selective catalytic reduction (SCR) unit operating. During "non-ozone season," tests were conducted November 5 with the SCR bypassed. The tests were performed under U. S. Department of Energy (DOE) Cooperative Agreement No. DE-FC26-02NT41589, and the Electric Power Research Institute (EPRI) Agreement No. EP-P13687/C6820. The ozone season test program consisted of four sets of measurements across the combustion emission control system that consists of the SCR unit, electrostatic precipitator (ESP), and flue gas desulfurization (FGD) system. The non-ozone season test program consisted of three sets of measurements at the FGD inlet and the stack.

The mercury measurements were made using the Ontario-Hydro Flue Gas Hg Speciation Method. The testing conducted by CONSOL R&D is documented in this report.

Table 1. Coal-fired facilities in program

Site #	MW	Air Pollution Control Devices	Coal	Ozone Unit
1	330	SCR / Spray Dryer / Baghouse	Bit	year round
2	245	SCR / Spray Dryer / Baghouse	Bit	year round
3	508	SCR / ESP/ Limestone FGD, inhibited oxidation	Bit	Yes
4 Unit 1	468	ESP/ Limestone FGD, natural oxidation	Bit	(1)
4 Unit 2	468	SCR / ESP/ Limestone FGD, natural oxidation	Bit	year round
5 Unit 1	1,300	SCR / ESP/ Limestone FGD, in-situ oxidation	Bit	Yes
5 Unit 2	1,300	ESP/ Limestone FGD, in-situ oxidation	Bit	(1)
6 (2)	544	SCR / ESP/ Limestone FGD, ex-situ oxidation	Bit	Yes
7 (2)	566	SCR / ESP/ Limestone FGD, ex-situ oxidation	Bit	Yes
8	684	SCR / ESP / Lime FGD, ex-situ oxidation	Bit	Yes
9	640	SCR / ESP/ Lime FGD, inhibited oxidation	Bit	Yes
10	1,300	SCR / ESP/ Lime FGD, inhibited oxidation	Bit	Yes

(1) SCR was not installed when tests were conducted.
(2) Tests were also conducted during non-ozone seasons while flue gas bypassed SCR.

HOST UTILITY DESCRIPTION

Plant 7 is a generation facility operating coal- and gas-fired units. The coal unit typically burns bituminous coal containing approximately 3-4% sulfur, and is equipped with ESP and limestone-based wet FGD to control the emissions of particulate matter

and sulfur dioxide (SO_2). The FGD was designed for 90% SO_2 reduction[1]. Unit 1 is also equipped with an SCR unit for NOx control. Anhydrous ammonia is injected in front of the plate-type SCR catalyst (provided by Hitachi) beds to react with NOx. The SCR unit is operated only during the ozone season.

Mercury measurements and speciation tests were conducted at Unit 1, a 566 MW dry-bottom wall-fired boiler with a nominal design heat input of 5,025 MM Btu per hour.[2] Particulate matter is removed by ESPs arranged in two blocks. Each block has 20 ash hoppers arranged in five rows of four hoppers each. The limestone-based wet FGD system has two scrubber modules and all the combustion flue gas is scrubbed. The calcium sulfite rich scrubber sludge is oxidized in external vessels (ex-situ oxidation). The calcium sulfate (or gypsum) slurry formed in the oxidizers is pumped into a hydroclone bank. The hydroclone underflow (HCUF) stream, which contains the larger gypsum crystals, is further dewatered by drum filters inside the gypsum building. The hydroclone overflow (HCOF) stream flows back to the scrubber modules for volume makeup. The scrubbed flue gas exits through a 760 foot stack.

MERCURY SAMPLING RESULTS

I. Test Matrix

The ozone season mercury measurements consisted of a total of four tests over two days, the non-ozone season measurements were three tests performed in one day. The test matrix is shown in Table 2. A total of 20 flue gas mercury measurements were conducted at five locations (SCR inlet, SCR outlet, air heater outlet, FGD inlet, and stack) during the August test program; a total of 6 flue gas mercury measurements were conducted at two locations (FGD inlet and stack) during the November test program. The Ontario Hydro Method (ASTM Method D-6784-02) was used to perform the measurements. Mercury measurements were performed with a maximum duration of 160 minutes. Details of sampling conditions are provided later in this report.

To calculate the material balance, CONSOL R&D and plant personnel obtained process samples (coal, bottom ash, ESP ash, limestone slurry, FGD slurry, FGD makeup water, hydroclone overflow slurry, hydroclone underflow slurry, mist eliminator wash water, and gypsum) simultaneously during the gas sampling periods. CONSOL R&D performed all the laboratory analyses; no analysis was subcontracted out. Detailed results of analyses are included in this report.

---

[1] U.S. Department of Energy, Energy Information Administration, F767 database for year 2003.

[2] Per facility's Title V permit.

Table 2. Sampling test matrix

Date	Activity	Flue Gas Sampling					Process Sampling								
		SCR Inlet	SCR Outlet	Air Heater Outlet	FGD Inlet	Stack	Coal	Bottom Ash	ESP Ash	Limestone Slurry	FGD Slurry	FGD Makeup Water	Hydroclone Overflow Slurry	Hydroclone Underflow Slurry	ME Wash Water
16-Aug	Setup	---	---	---	---	---	---	---	---	---	---	---	---	---	---
17-Aug	Test 1	X	X	X	X	X	X	X	X	X	X	X	---	---	---
18-Aug	Test 2	X	X	X	X	X	X	X	X	X	X	X	---	---	---
	Test 3	X	X	X	X	X	X	X	X	X	X	X	X	X	X
19-Aug	Test 4	X	X	X	X	X	X	X	X	X	X	X	X	X	X
20-Aug	Pack, Demobilize	---	---	---	---	---	---	---	---	---	---	---	---	---	---
4-Nov	Setup	---	---	---	---	---	---	---	---	---	---	---	---	---	---
5-Nov	Test 1	---	---	---	X	X	X	---	---	X	X	X	X	X	X
	Test 2	---	---	---	X	X	X	---	---	X	X	X	X	X	X
	Test 3	---	---	---	X	X	X	---	---	X	X	X	X	X	X
6-Nov	Pack, Demobilize	---	---	---	---	---	---	---	---	---	---	---	---	---	---

II. Flue Gas Mercury Sampling Results

Figures 1 and 2 show the mercury speciation for the four tests conducted at each location in August 2004 and November 2004, respectively. All gas streams were sampled isokinetically. A complete compendium of mercury analyses is in Appendix C. The test results at each sampling location are discussed in the following sections; the tables list the flue gas mercury concentrations and the mercury mass flow rates for each location.

A. SCR inlet

Four mercury measurements were conducted at the SCR inlet in August 2004. Table 3 summarizes the mercury measurements at the SCR inlet. The results show that more than 99% of the mercury was in the gas phase and less than 1% of the mercury was in the particulate form (Hg^{part}). The high percentage of gas phase mercury is expected due to the gas temperature (660°F) at this location. Eighty-five percent of the total mercury was in the oxidized form (Hg^{++}).

Table 3. Flue gas mercury speciation at the SCR inlet

Date	Test No.	Hg Concentration, µg/m^3 (dry std conditions)				Hg Flow, mg/sec			
		Hg^{part}	Hg^{++}	Hg^{0}	Hg^{total}	Hg^{part}	Hg^{++}	Hg^{0}	Hg^{total}
8/17	1	0.025	10.9	2.53	13.5	0.011	4.90	1.13	6.05
8/18	2	0.033	9.71	0.95	10.7	0.015	4.32	0.42	4.76
8/18	3	0.023	9.97	1.38	11.4	0.011	4.49	0.62	5.12
8/19	4	0.029	9.47	1.98	11.5	0.013	4.31	0.90	5.23
Average		0.028	10.0	1.71	11.8	0.012	4.51	0.77	5.29
Standard Deviation		0.004	0.64	0.69	1.21	0.002	0.28	0.31	0.55
PRSD		15%	6%	41%	10%	15%	6%	41%	10%

B. SCR outlet

Four mercury measurements were conducted at the SCR outlet location in August 2004. Table 4 summarizes the mercury measurements at this location. Most (79%) of the mercury was vapor-phase Hg^{++}.

Table 4. Flue gas mercury speciation at the SCR outlet

Date	Test No.	Hg Concentration, µg/m^3 (dry std conditions)				Hg Flow, mg/sec			
		Hg^{part}	Hg^{++}	Hg^{0}	Hg^{total}	Hg^{part}	Hg^{++}	Hg^{0}	Hg^{total}
8/17	1	0.089	10.92	5.25	16.3	0.040	4.94	2.37	7.35
8/18	2	0.248	8.19	1.29	9.73	0.109	3.59	0.57	4.26
8/18	3	0.094	12.5	1.98	14.6	0.042	5.60	0.88	6.53
8/19	4	0.039	9.30	2.17	11.5	0.018	4.18	0.97	5.17
Average		0.118	10.2	2.67	13.0	0.052	4.58	1.20	5.83
Standard Deviation		0.090	1.90	1.76	2.95	0.039	0.88	0.80	1.38
PRSD		77%	19%	66%	23%	75%	19%	67%	24%

C. Air heater outlet

Four mercury measurements were conducted at the air heater outlet location in August 2004. Table 5 summarizes the mercury measurements at this location. The majority (97%) of the mercury was vapor-phase Hg^{++}.

Table 5. Flue gas mercury speciation at the air heater outlet

Date	Test No.	Hg Concentration, µg/m^3 (dry std conditions)				Hg Flow, mg/sec			
		Hg^{part}	Hg^{++}	Hg^{0}	Hg^{total}	Hg^{part}	Hg^{++}	Hg^{0}	Hg^{total}
8/17	1	0.030	16.0	0.31	16.3	0.014	7.37	0.14	7.52
8/18	2	0.189	14.6	0.24	15.1	0.089	6.88	0.11	7.08
8/18	3	0.078	12.9	0.26	13.2	0.036	5.98	0.12	6.14
8/19	4	0.125	13.1	0.39	13.6	0.058	6.14	0.18	6.38
	Average	0.106	14.2	0.30	14.6	0.049	6.59	0.14	6.78
	Standard Deviation	0.068	1.45	0.07	1.42	0.032	0.65	0.03	0.64
	PRSD	64%	10%	22%	10%	65%	10%	22%	9%

D. FGD inlet

Four mercury measurements were conducted at the FGD inlet location in August 2004 and three in November 2004. Tables 6a and 6b summarize the mercury measurements. In both sets of tests, nearly 100% of the flue gas mercury was in the gaseous phase. With the SCR in operation (Table 6a), 97% of the total mercury was Hg^{++}; with the SCR bypassed (Table 6b), 91% of the total mercury was Hg^{++}.

Table 6a. Flue gas mercury speciation at the FGD inlet (SCR in operation)

Date	Test No.	Hg Concentration, µg/m^3 (dry std conditions)				Hg Flow, mg/sec			
		Hg^{part}	Hg^{++}	Hg^{0}	Hg^{total}	Hg^{part}	Hg^{++}	Hg^{0}	Hg^{total}
8/17	1	0.002	10.1	0.21	10.3	0.001	4.75	0.10	4.85
8/18	2	0.036	11.2	0.61	11.8	0.017	5.37	0.29	5.68
8/18	3	0.018	10.6	0.20	10.8	0.009	5.11	0.09	5.22
8/19	4	0.002	11.2	0.33	11.5	0.001	5.44	0.16	5.60
	Average	0.015	10.7	0.34	11.1	0.007	5.17	0.16	5.34
	Standard Deviation	0.016	0.53	0.19	0.70	0.008	0.31	0.09	0.38
	PRSD	110%	5%	57%	6%	110%	6%	57%	7%

Table 6b. Flue gas mercury speciation at the FGD inlet (SCR is bypassed)

Date	Test No.	Hg Concentration, µg/m^3 (dry std conditions)				Hg Flow, mg/sec			
		Hg^{part}	Hg^{++}	Hg^{0}	Hg^{total}	Hg^{part}	Hg^{++}	Hg^{0}	Hg^{total}
11/05	1	0.129	7.06	0.64	7.83	0.063	3.42	0.31	3.79
11/05	2	0.062	13.1	0.68	13.9	0.029	6.11	0.32	6.45
11/05	3	0.418	9.86	0.95	11.2	0.198	4.67	0.45	5.32
	Average	0.203	10.0	0.76	11.0	0.096	4.73	0.36	5.19
	Standard Deviation	0.189	3.04	0.17	3.02	0.089	1.35	0.08	1.34
	PRSD	93%	30%	23%	28%	93%	28%	22%	26%

E. Stack

Four mercury measurements were conducted at the stack in August 2004 and three in November 2004. Tables 7a and 7b summarize the mercury measurements. With the SCR in operation (Table 7a), 46% of the total mercury was Hg^{++}; with the SCR bypassed (Table 7b), only 27% of the total mercury was Hg^{++}.

With the SCR operating, elemental mercury increased by 0.28 mg/sec, from 0.16 mg/sec at the FGD inlet to 0.44 mg/sec at the stack. With the SCR bypassed, the increase was greater, 0.84 mg/sec (0.36 mg/sec at the FGD inlet and 1.20 mg/sec at the stack). An increase of Hg^0 across wet scrubbers has been observed by CONSOL R&D at other plants.[3,4]

[3] DeVito, M. S., Withum, J. A., and Statnick, R. M., "Flue Gas Measurements from Coal-Fired Boilers Equipped with Wet Scrubbers," Int. J. of Environ. Pollution 17 (1/2), 2002, p. 126-142

[4] Evaluation of Mercury Emissions from Coal-Fired Facilities with SCR and FGD Systems - Topical Report Nos. 1 and 4 through 8, U.S. DOE Cooperative Agreement DE-FC26-02NT41589

Table 7a. Flue gas mercury speciation at the stack (SCR in operation)

Date	Test No.	Hg Concentration, µg/m^3 (dry std conditions)				Hg Flow, mg/sec			
		Hg^{part}	Hg^{++}	Hg^{0}	Hg^{total}	Hg^{part}	Hg^{++}	Hg^{0}	Hg^{total}
8/17	1	0.011	0.74	0.32	1.07	0.005	0.36	0.16	0.52
8/18	2	0.002	0.61	0.84	1.45	0.001	0.29	0.40	0.69
8/18	3	0.012	0.77	0.80	1.58	0.006	0.37	0.39	0.76
8/19	4	0.002	0.52	1.70	2.22	0.001	0.25	0.82	1.07
Average		0.007	0.66	0.92	1.58	0.003	0.32	0.44	0.76
Standard Deviation		0.006	0.12	0.57	0.48	0.003	0.06	0.28	0.23
PRSD		83%	18%	62%	30%	83%	18%	62%	30%

Table 7b. Flue gas mercury speciation at the stack (SCR is bypassed)

Date	Test No.	Hg Concentration, µg/m^3 (dry std conditions)				Hg Flow, mg/sec			
		Hg^{part}	Hg^{++}	Hg^{0}	Hg^{total}	Hg^{part}	Hg^{++}	Hg^{0}	Hg^{total}
11/05	1	0.002	0.91	2.53	3.45	0.001	0.43	1.19	1.62
11/05	2	0.002	1.33	2.75	4.09	0.001	0.64	1.32	1.96
11/05	3	0.006	0.69	2.24	2.93	0.003	0.34	1.10	1.44
Average		0.003	0.97	2.51	3.49	0.002	0.47	1.20	1.67
Standard Deviation		0.002	0.33	0.26	0.58	0.001	0.15	0.11	0.26
PRSD		67%	34%	10%	17%	69%	33%	9%	16%

III. SCR/FGD System Hg Removal

Tables 8a and 8b summarize the flue gas mercury removal for the two test periods. With the SCR operating (Table 8a), the coal-to-stack mercury removal ranged from 79 to 91% and the average coal-to-stack mercury removal was 86%. This is typical of the removals observed on other units with SCR-FGD combinations in this project[4]. With the SCR bypassed (Table 8b), the coal-to-stack mercury removal ranged from 70 to 79% and the average coal-to-stack mercury removal was 73%. Again, this is similar to the removals observed in other plants in this test program when the SCR is not present or is bypassed.

Table 8a. Flue gas mercury removal (with SCR in operation)

Date	Test No.	System Mercury Reduction					
		Based on Ontario Hydro Measurements at the FGD Inlet and Stack, mg Hg^{total} /sec			Based on Mercury in the Coal Feed and Ontario Hydro Measurements at the Stack, mg Hg^{total} /sec		
		FGD Inlet	Stack Emissions	% Reduction	Coal Feed	Stack Emissions	% Reduction
8/17	1	4.85	0.52	89	5.48	0.52	91
8/18	2	5.68	0.69	88	5.61	0.69	88
8/18	3	5.22	0.76	85	5.42	0.76	86
8/19	4	5.60	1.07	81	5.11	1.07	79
Average		5.34	0.76	85.9	5.40	0.76	85.8
Standard Deviation		0.38	0.23	3.7	0.21	0.23	4.9
PRSD		7%	30%	4%	4%	30%	6%

Table 8b. Flue gas mercury removal (SCR bypassed)

Date	Test No.	System Mercury Reduction					
		Based on Ontario Hydro Measurements at the FGD Inlet and Stack, mg Hg^{total} /sec			Based on Mercury in the Coal Feed and Ontario Hydro Measurements at the Stack, mg Hg^{total} /sec		
		FGD Inlet	Stack Emissions	% Reduction	Coal Feed	Stack Emissions	% Reduction
11/05	1	3.79	1.62	57	5.73	1.62	72
11/05	2	6.45	1.96	70	6.51	1.96	70
11/05	3	5.32	1.44	73	6.71	1.44	79
Average		5.19	1.67	66.6	6.32	1.67	73.4
Standard Deviation		1.34	0.26	8.3	0.52	0.26	4.6
PRSD		26%	16%	12%	8%	16%	6%

IV. Mercury Material Balance

An important criterion to gauge the overall quality of the tests is to conduct a mass balance to account for the mercury entering and leaving the plant during the tests. The mercury material balance closure is the total mercury output from the plant divided by the total mercury input (expressed as %). The total mercury input is the sum of the amounts of mercury entering the system from coal, limestone slurry, ME wash water,

and make-up water. The total mercury output is the sum of the amounts of mercury leaving the system via bottom ash, ESP hopper ash, FGD slurry, and stack flue gas.

Tables 9a and 9b summarize the mercury material balance closures for the tests conducted at this unit. The mercury material balance closures ranged from 78% to 85% in the August tests and between 77 and 102% in the November tests. The material balance closures for mercury for all individual tests are within our QA/QC criterion of 70-130% for a single test. The average material balance closure is 81% for the August tests and 87% for the November tests, within our QA/QC criterion of 80-120% for multiple tests. The measurements, calculations, and assumptions for calculating the material balances are described later in this report.

Table 9a. Mercury material balance closure (with SCR in operation)

Test No.	**1**	**2**	**3**	**4**
Total Hg Input (mg/sec)	5.62	5.73	5.60	5.25
Total Hg Output (mg/sec)	4.52	4.46	4.74	4.15
Hg Material Balance Closure (output / input)	80%	78%	85%	79%
Average Hg Material Balance Closure (%)	**81 ± 3 %**			

Table 9b. Mercury material balance closure (SCR bypassed)

Test No.	**1**	**2**	**3**
Total Hg Input (mg/sec)	3.97	6.66	5.56
Total Hg Output (mg/sec)	3.84	5.90	4.16
Hg Material Balance Closure (output / input)	97%	89%	75%
Average Hg Material Balance Closure (%)	**87 ± 11 %**		

SCR/Non-SCR Test Comparison

The results show that the SCR does indeed increase the oxidation of the mercury. At the point where the flue gas enters the FGD, a greater percentage of the mercury is in the oxidized form when the SCR is operating compared to when the SCR is bypassed. Table 10 shows the average mercury speciation of the flue gas in the FGD inlet duct for both test periods. Because this location is downstream of the plant's ESP, there is very little particulate mercury.

Table 10. Comparison of Average Flue Gas Mercury Speciation at the FGD Inlet

	Ozone Season Tests (with SCR)	Non-Ozone Season Tests (without SCR)
Hg^{part}	0.1%	1.9%
Hg^{++}	96.9%	90.9%
Hg^{0}	3.0%	7.2%

This higher level of oxidation resulted in higher mercury removals in the scrubber. Table 11 shows that total mercury removal was 86% with the SCR, and 68% without the SCR; the removal of oxidized mercury in the scrubber was about the same (90-94%) in both cases. The difference was due to a greater percentage of oxidized mercury being reduced to elemental mercury in the scrubber during the tests with SCR; this increase in elemental mercury in wet scrubbers has been observed in tests at other plants in this program[4]. The reason for the greater effect in the November tests compared to the August tests is not clear; scrubber sulfite concentration is believed to play a role but this has not been verified. Scrubber sulfite concentration was not measured in this test program.

Table 11. Comparison of Average Mercury Reductions Across the FGD Scrubber

	Ozone Season Tests (with SCR)			Non-ozone Season Tests (without SCR)		
	FGD Inlet, mg Hg/sec	Stack, mg Hg/sec	Reduction	FGD Inlet, mg Hg/sec	Stack, mg Hg/sec	Reduction
Hg^{part}	0.007	0.003	54%	0.096	0.002	98%
Hg^{++}	5.17	0.32	94%	4.73	0.47	90%
Hg^{0}	0.16	0.44	-171%	0.36	1.20	-235%
Total Hg	5.34	0.76	86%	5.19	1.67	67%

EXPERIMENTAL AND SAMPLING METHODS

CONSOL R&D performed flue gas mercury determinations using the Ontario-Hydro sampling method. As a quality assurance/quality control (QA/QC) measure, samples of the coal, bottom ash, FGD slurry, limestone slurry, and ESP ash, were taken to determine a mercury balance across the system.

I. Flue Gas Sampling Locations and Sampling Points

Five sampling locations, the SCR inlet, SCR outlet, air heater outlet (upstream of the ESP), FGD inlet, and stack outlet, were tested. Figure 3 is a flow schematic indicating the sampling locations at this unit.

Flue gas exits the economizer through two ducts (designated Ducts A and B) and passes through the SCR, air heater, ESP, and FGD, before it combines to form a single flue tube at the stack. All sampling at points leading to the stack was conducted in Duct A. The mercury mass flow rates were calculated using the measured flue gas mercury concentrations and a calculated gas flow rate for each sampling location (except for the stack location, where the gas flow rate was measured). The gas flow rate calculation was based on the stack gas flow rate, with a correction for air in-leakage based on the location's flue gas oxygen concentration relative to the stack gas oxygen concentration. The stack was the only location where flow could be measured accurately using a full pitot traverse. Individual sampling locations are detailed in the following sections.

A. SCR inlet

The SCR inlet consists of two vertical, rectangular ducts, measuring 13 feet deep by 28 feet, 6 inches wide at the sampling plane. Three sample ports are spaced across the face of each duct.

Only Duct A was sampled in this program. Preliminary pitot surveys conducted on August 16, 2004, indicated that the gas flow was straight, not cyclonic or swirling. The flue gas was sampled through the middle test port at a single point for the full duration of the test. Parametric readings were recorded every ten minutes. Total test duration was 120 minutes. Mercury measurements were conducted with the sampling nozzle oriented parallel to and directly into the flow.

Four mercury measurements were performed isokinetically at the SCR inlet. The sample train was prepared in EPA Method 17 configuration using an in-stack 19 mm x 90 mm quartz-fiber thimble filter. The filter apparatus was attached to a heated probe that was connected to the impinger train with a flexible heated Teflon sample line. Figure 4 is a photograph of the mercury sampling train at the SCR inlet.

B. SCR outlet

The SCR outlet consists of two vertical, rectangular ducts, each measuring 25 feet, 11 inches deep by 55 feet wide. Eight sample ports are spaced across the face of each duct.

Only Duct A was sampled in this program. Preliminary pitot surveys conducted on August 16, 2004, indicated that the gas flow was straight, not cyclonic or swirling. The flue gas was sampled through four test ports, each at a single point for 30 minutes, with parametric readings every ten minutes. Mercury measurements were conducted with the sampling nozzle oriented parallel to and directly into the flow for a period of 120 minutes.

Four mercury measurements were performed isokinetically at the SCR outlet. The sample train was prepared in EPA Method 17 configuration using an in-stack 19 mm x 90 mm quartz-fiber thimble filter. The filter apparatus was attached to a heated probe that was connected to the impinger train with a flexible heated Teflon sample line. Figure 5 is a photograph of the mercury sampling train at the SCR outlet.

C. Air heater outlet

The air heater outlet duct consists of two horizontal ducts, each approximately 9 feet deep and 34 feet wide. Eight test ports are located across the top of each duct. Preliminary pitot surveys conducted on August 16, 2004, indicated that the gas flow was parallel to the duct walls.

The flue gas was sampled through two test ports. Ideally three points would have been sampled in each port for 20 minutes each; however, the port length prevented the probe from reaching the deepest point. As a result the middle point was sampled twice for a total of 40 minutes. Total test durations were 120 minutes with parametric readings recorded every ten minutes. Mercury measurements were conducted with the sampling nozzle oriented parallel to and directly into the flow.

Four mercury measurements were performed isokinetically at the air heater outlet. The sample train was prepared in EPA Method 17 configuration using an in-stack 19 mm x 90 mm quartz-fiber thimble filter. The filter apparatus was attached to a heated probe that was connected to the impinger train with a flexible heated Teflon sample line. Figure 6 is a photograph of the mercury sampling train and a blank train (for QA/QC purposes) at the air heater outlet location.

D. FGD inlet

The FGD inlet consists of two ducts leading to two pair of FGD modules. A single test port was available in the A duct, downstream of the induced draft fan. A single point, near the center of the duct was sampled. A preliminary pitot survey conducted on August 16, 2004, indicated that the gas flow was parallel to the duct walls at this point.

Parametric readings were recorded every ten minutes over the test periods, which varied from 120 minutes to 160 minutes. Mercury measurements were conducted isokinetically with the sampling nozzle oriented parallel to and directly into the flow.

Four mercury measurements were performed at the FGD inlet in August and four in November. The sample train was prepared in EPA Method 17 configuration using an in-stack 47-mm quartz-fiber disc filter. The filter apparatus was attached to a heated probe that was connected to the impinger train with a flexible heated Teflon sample line. Figure 7 is a photograph of the mercury sampling train on the FGD inlet location.

E. Stack

The stack is approximately 18 feet in diameter. Three points were sampled in each of four sample access ports for a total of 12 traverse points. Each point was sampled for a period of 10 minutes resulting in 120 minute tests.

Preliminary pitot surveys conducted on August 16, 2004, indicated that the gas flow was axial. Mercury measurements were conducted with the nozzle oriented horizontally, directly into the flow. Four measurements were performed isokinetically at this location in August and four in November. A standard EPA Method 5 sample train configuration was utilized for this location. Figure 8 is a photograph of the mercury sampling train on the stack location.

II. Flue Gas Mercury Measurements

Flue gas mercury measurements were conducted using the Ontario-Hydro mercury speciation train. A schematic of the sampling train is shown in Figure 9.

The flue gas was extracted from the duct and pulled through a heated glass-lined probe and quartz filter. Total particulate matter mass loading was calculated from the solids collected prior to and on the filter. Probe temperatures were set at 325 ± 25 °F at the SCR inlet and outlet, the air heater outlet and the FGD inlet. Probe and filter temperatures were maintained at 250 ± 25 °F at the stack. Where particle loading is high, the probe and filter are maintained as close as practical to the flue gas temperature.

Mercury collected prior to and on the filter is assumed to be Hg^{part}. The flue gas exits the quartz filter and passes through a series of chilled impingers. The first three impingers are filled with 100 mL of a 1M-potassium chloride (KCl) solution. It is assumed that these impingers capture Hg^{++} in the flue gas. The next impinger is filled with 100 mL of a 5% nitric acid and 10% hydrogen peroxide (H_2O_2) solution. The purpose of this impinger is to remove SO_2 from the flue gas to preserve the oxidizing strength of the two downstream impingers with acidic potassium permanganate ($KMnO_4$) solution. Mercury collected in this impinger is assumed to be Hg^0. The next two impingers are filled with 100 mL of an acidic $KMnO_4$ solution. It is assumed that these impingers capture Hg^0. The next impinger is blank to catch any excess moisture. The gas exits the impinger train through a silica gel-filled impinger that removes the moisture from the flue gas. The mercury species collected by the Ontario-Hydro sampling train component are listed in Table 12.

Table 12. Mercury speciation by train component

Train Component	Species Measured
Probe & Nozzle Rinse	Hg^{part}
Quartz Filter	Hg^{part}
KCl Impingers	Hg^{++}
HNO_3/H_2O_2 Impinger	Hg^0
$KMnO_4$ Impingers	Hg^0
HCl Rinse of $KMnO_4$ Impingers	Hg^0

The absorbing solutions were made fresh daily. The impingers were charged and the sampling components were transported to the required locations. The sampling trains were assembled, pre-heated, and checked for pitot and sample line leaks as detailed in EPA Methods 2 and 5, respectively. After passing the leak-check procedure, the sampling probes were inserted into their respective ducts, in-stack filters were allowed to heat to stack temperature, and sampling was initiated. Leak checks were also performed during port changes.

Oxygen readings were monitored at the outlet of the sampling train using a Teledyne Model Max 5 portable analyzer (electrochemical O_2 sensor). At the completion of the sampling period, the sample trains were checked for leaks, purged for 10 min, and then disassembled. The components were transported back to the lab trailer for recovery. The mercury concentration of the individual impinger solutions was determined by cold vapor atomic absorption (CVAA) as specified in the methodology. The concentration of mercury on the solids was determined by acid digestion followed by CVAA.

The amount of mercury collected in the impinger solutions was determined as outlined in EPA Method 29 and the Ontario-Hydro Draft Method. An aliquot of the impinger solution was acidified and the mercury is determined using cold vapor-atomic absorption spectroscopy. The atomic absorption spectrometer was calibrated with commercial mercury standard. The calibration was verified using NIST Standard Reference Materials (SRM) 1641D and 1633b. The calibration was reassessed periodically by analyzing a quality control standard. The instrument was recalibrated as required. Each sample matrix was analyzed as a set and an individual calibration curve was used for each set. Depending on sample type, selected samples were spiked with 2, 5, 10, or 15 ng/ml (ppb) of mercury and reanalyzed. Spike recovery must be within ±30% or the sample is diluted and reanalyzed. Selected samples were analyzed in duplicate. The duplicates must be within ±30% or the analyses are repeated.

Where sufficient solids were collected, particulate mercury was analyzed using a 0.5-1.0 gm ash sample with the direct combustion method (ASTM Method D6722). In cases where the particulate catch was low (primarily stack filters), the entire filter sample was digested with aqua-regia in pressure vessels prior to analysis by CVAA.

III. Coal Sampling and Analysis

A. Coal samples

Plant personnel collected coal samples from coal feed bins in service. In the August test program,two 5-gallon coal samples were taken during each test, one at the start of the test and the second near the end of the test. The coal properties did not vary substantially from one sample to the next; therefore, in the November test program only one sample was taken during each test. Listed in Table 13 are the coal samples collected.

Table 13. List of coal samples

Ozone Season Test No.	1		2		3		4	
Sample Date	8/17/2004		8/18/2004		8/18/2004		8/19/2004	
Sample I.D.	Coal-Start of Test 1	Coal-End of Test 1	Coal-Start of Test 2	Coal-End of Test 2	Coal-Start of Test 3	Coal-End of Test 3	Coal-Start of Test 4	Coal-End of Test 4
Non-Ozone Season Test No.	1		2		3			
Sample Date	11/05/2004		11/05/2004		11/05/2004			
Sample I.D.	Coal-1		Coal-2		Coal-3			

B. Results of analyses of coal samples

Coal samples were analyzed using a direct mercury analyzer following the procedures prescribed in ASTM Method D6722. Detailed analyses of the coal samples collected in each test are presented in Appendix D and the results are summarized in Tables 14 and 15. The coal mercury content increased between August and November. The mercury measured in the August coal samples ranged from 0.104 to 0.128 ppm and in the November coal samples ranged from 0.127 to 0.148 ppm.

Table 14. Coal sample analyses – ozone season samples

Sample Description	Coal Start of Test #1	Coal End of Test #1	Coal Start of Test #2	Coal End of Test #2	Coal Start of Test #3	Coal End of Test #3	Coal Start of Test #4	Coal End of Test #4
Sample Date	08/17/2004	08/17/2004	08/18/2004	08/18/2004	08/18/2004	08/18/2004	08/19/2004	08/19/2004
Analytical No.	20044136	20044137	20044138	20044139	20044140	20044141	20044142	20044143
Total Moisture, as rec'd (%)	9.89	9.12	10.21	10.44	10.30	9.93	10.56	10.48
Moisture, as det'd (%)	6.19	6.17	6.36	6.28	6.07	6.13	6.36	6.20
VM (%, dry)	38.35	38.14	38.7	39.06	38.98	38.92	38.68	39.25
Ash (%, dry)	11.11	11.32	10.48	10.8	11.01	11.01	11.65	10.47
Carbon (%, dry)	71.33	71.28	71.48	71.25	71.65	69.93	71.02	71.63
Hydrogen (%, dry)	3.89	4.06	4.11	4.01	4.22	4.00	4.14	4.02
Nitrogen (%, dry)	1.81	1.85	1.86	1.88	1.85	1.86	1.77	1.94
Total Sulfur (%, dry)	3.23	3.23	3.67	3.80	3.53	3.69	3.62	3.64
HHV (Btu/lb, dry)	12,774	12,759	12,808	12,783	12,795	12,740	12,606	12,810
Chlorine (%, dry)	0.02	0.02	0.01	0.01	0.01	0.01	0.01	0.01
Hg (ppm, as det'd)	0.104	0.128	0.118	0.117	0.112	0.117	0.106	0.105
Major Ash Elements (%, dry)								
SiO_2	49.22	50.07	46.05	44.31	47.80	47.01	47.86	47.05
Al_2O_3	23.45	23.39	21.38	20.91	21.98	22.12	22.22	21.21
TiO_2	1.10	1.09	0.99	0.97	1.04	1.00	1.00	0.97
Fe_2O_3	20.5	19.58	24.93	26.02	22.53	24.22	22.18	23.27
CaO	1.42	1.33	1.55	1.96	1.48	1.23	1.79	1.95
MgO	0.93	0.92	0.88	0.86	0.96	0.96	1.02	0.89
Na_2O	0.32	0.3	0.29	0.32	0.28	0.28	0.32	0.28
K_2O	2.88	2.88	2.63	2.57	2.79	3.05	3.18	2.89
P_2O_5	0.26	0.24	0.25	0.23	0.24	0.26	0.24	0.23
SO_3	1.36	1.31	1.46	1.98	1.52	1.08	1.48	1.61

Table 15. Coal sample analyses – non-ozone season samples

Sample Description	Coal -1	Coal-2	Coal-3
Sample Date	11/05/2004		
Analytical No.	20045578	20045579	20045580
Total Moisture [%]	10.85	10.68	10.44
Moisture, as det'd [%]	3.22	3.20	3.37
VM [%, dry]	37.62	37.49	37.49
Ash [%, dry]	11.88	12.16	12.21
Total Carbon [%, dry]	71.59	71.69	71.06
Hydrogen [%, dry]	4.66	4.63	4.63
Nitrogen [%, dry]	1.54	1.56	1.57
Total Sulfur [%, dry]	3.63	3.73	3.67
Oxygen [%, dry], by difference	6.64	6.17	6.81
HHV [Btu/lb, dry]	12,868	12,901	12,856
HHV [Btu/lb, MAF]	14,603	14,687	14,644
Chlorine [%, dry]	0.062	0.056	0.052
Hg [ppm, as det'd]	0.127	0.144	0.148
Major Ash Elements [%, dry]			
SiO_2	44.78	44.67	45.11
Al_2O_3	21.35	20.48	20.46
TiO_2	0.98	0.99	0.99
Fe_2O_3	23.02	22.68	22.85
CaO	2.73	2.96	2.82
MgO	0.82	0.83	0.80
Na_2O	0.47	0.43	0.43
K_2O	2.67	2.48	2.38
P_2O_5	0.25	0.27	0.23
SO_3	2.52	2.53	2.34

IV. Process Sample Collection and Analysis

CONSOL R&D and plant personnel collected samples of bottom ash, ESP hopper ash, limestone slurry, FGD slurry, HCOF slurry, HCUF slurry, ME wash water, and FGD makeup water. CONSOL R&D completed comprehensive analyses using a direct mercury analyzer and following prescribed in the procedures of ASTM Method D6722. Detailed results of the analyses of those process samples are presented in Appendix D.

A. Bottom ash

Plant operators collected the bottom ash samples from the sluice pipe. One sample was collected at the end of each test day. No bottom ash samples were obtained during the November testing. The samples were filtered to generate a filtrate and a solid residue (i.e., filter cake) before analysis. Listed in Tables 16a and 16b are the results of analyses of the bottom ash samples. The mercury in the solids ranged from 0.009 to 0.022 ppm; the mercury in the filtrate samples was below the detection limit of 1.0 µg/L.

Table 16a. Results of analyses of bottom ash filtered solids

Sample ID	Bottom Ash Test#1	Bottom Ash Test 2&3	Bottom Ash Test #4
Sample Date	08/17/2004	08/18/2004	08/19/2004
Analytical No.	20044145	20044146	20044147
Residual moisture (%)	0.20	0.40	0.32
Ash (%, dry)	99.51	97.17	99.33
Carbon (%, dry)	1.00	3.26	1.08
Total Sulfur (%, dry)	0.13	0.68	0.28
Chlorine (%, dry)	0.041	0.066	0.053
Hg (ppm, as det'd)	0.009	0.022	0.007
Major Ash Elements (%, dry)			
SiO_2	48.15	44.89	47.28
Al_2O_3	21.26	18.93	19.66
TiO_2	1.03	0.91	0.96
Fe_2O_3	24.87	28.70	26.65
CaO	1.80	1.90	1.73
MgO	0.95	0.90	0.97
Na_2O	0.27	0.25	0.24
K_2O	2.31	2.11	2.37
P_2O_5	0.09	0.08	0.09
SO_3	0.33	1.69	0.71

Table 16b. Results of analyses of bottom ash filtrate

Sample ID	Bottom Ash Liquid Test 1	Bottom Ash Liquid Tests 2 & 3	Bottom Ash Liquid Test 4
Test No.	1	2 & 3	4
Sample Date	08/17/2004	08/18/2004	08/19/2004
Analytical No	20044240	20044241	20044242
Ca (μg/mL)	745	853	1110
Total Iron (μg/mL)	< 0.05	< 0.05	< 0.05
Mg (μg/mL)	1,310	1,150	961
K (μg/mL)	85.2	74.6	77.2
Na (μg/mL)	210	184	182
Ammonia as NH_3 (μg/mL)	<10	< 10	< 10
Cl (μg/mL)	1,700	1,690	1,720
NO_3 as N (μg/mL)	< 10	< 10	< 10
SO_4 (μg/mL)	5,110	4,580	4,280
Hg (μg/L)	< 1.0	< 1.0	< 1.0

B. Limestone slurry

CONSOL R&D personnel collected a slurry sample of approximately 500 mL from each of the two limestone slurry storage tanks during each test in August. In the November test program, CONSOL R&D personnel collected a slurry sample of approximately 500 mL from the discharge side of Pump #B1 during each test since this was the only limestone stream running during these tests. Upon arrival at CONSOL R&D's analytical labs, the limestone slurry samples were filtered to generate a filtrate and a solid residue (i.e., filter cake). The air-dried solids and the filtrates were analyzed separately. Listed in Table 17 and 18 are the results of analyses of the limestone slurry solids samples. Listed in Table 19 and 20 are the results of analyses of the limestone slurry filtrate samples.

Table 17. Results of analyses of limestone slurry solids samples – ozone season tests

Sample ID	Limestone Slurry Solids Test 1	Limestone Slurry Solids Test 2	Limestone Slurry Solids Test 3	Limestone Slurry Solids Test 4
Sample Date	08/19/2004	08/19/2004	08/18/2004	08/19/2004
Analytical No.	20044148	20044149	20044150	20044151
Solids in original sample (%)	25.7	23.6	24.2	24.9
Density of Original Sample (g/mL)	1.144	1.144	1.157	1.144
Moisture (%)	0.16	0.25	0.10	0.18
Ash (%, dry)	58.36	58.30	58.15	58.01
Carbon (%, dry)	11.18	11.25	10.95	11.32
Chlorine (%, dry)	0.03	0.04	0.03	0.03
Hg (ppm, as det'd)	0.006	0.007	0.006	0.010
Major Ash Elements (%, dry)				
SiO_2	3.92	3.60	3.36	3.05
Al_2O_3	0.83	0.76	0.70	0.64
TiO_2	0.03	0.03	0.03	0.03
Fe_2O_3	0.49	0.48	0.46	0.44
CaO	51.29	51.02	51.36	51.33
MgO	1.26	1.26	1.34	1.32
Na_2O	0.02	0.01	0.01	0.02
K_2O	0.20	0.18	0.18	0.16
P_2O_5	0.02	0.02	0.02	0.02
SO_3	0.29	0.28	0.31	0.29
UND	41.65	42.36	42.23	42.70

Table 18. Results of analyses of limestone slurry solids samples – non-ozone season tests

Sample ID	Limestone Slurry Solids Test 1	Limestone Slurry Solids Test 2	Limestone Slurry Solids Test 3
Sample Date	11/05/2004		
Analytical No.	20045581	20045582	20045583
Solids in original sample [%]	22.0	21.9	22.1
Specific Gravity of Original Sample	1.093	1.076	1.093
Moisture (%), air dried basis	0.32	0.32	0.26
Ash (%, dry)	58.17	58.22	58.17
Carbon (%, dry)	11.44	11.34	11.37
Total Sulfur (%, dry)	0.10	0.10	0.10
Chlorine (%, dry)	0.013	0.020	0.016
Hg (ppm, as det'd)	0.022	0.025	0.024
Major Ash Elements (%, dry)			
SiO_2	4.07	3.94	3.90
Al_2O_3	0.78	0.75	0.76
TiO_2	0.03	0.03	0.03
Fe_2O_3	0.52	0.52	0.52
CaO	53.79	54.20	53.99
MgO	1.49	1.49	1.52
Na_2O	0.02	0.03	0.02
K_2O	0.19	0.19	0.19
P_2O_5	0.01	0.02	0.01
SO_3	0.26	0.26	0.26

Table 19. Results of analyses of limestone slurry filtrate samples – ozone season tests

Sample ID	Limestone Slurry Liquid Test 1	Limestone Slurry Liquid Test 2	Limestone Slurry Liquid Test 3	Limestone Slurry Liquid Test 4
Analytical No.	20044243	20044244	20044245	20044246
Ca (µg/mL)	671	684	722	696
Total Iron (µg/mL)	0.41	0.05	0.21	< 0.05
Mg (µg/mL)	1,120	1,130	1,140	1,130
K (µg/mL)	81.3	81.2	77.0	80.7
Na (µg/mL)	191	190	183	189
Ammonia as NH_3 (µg/mL)	< 10	< 10	< 10	< 10
Cl (µg/mL)	1,650	1,660	1,650	1,800
NO_3 as N (µg/mL)	< 10	< 10	< 10	< 10
SO_4 (µg/mL)	4,290	4,340	4,380	4,360
Hg (µg/L)	3.8	< 1.0	< 1.0	< 1.0

Table 20. Results of analyses of limestone slurry filtrate samples – non-ozone season tests

Sample ID	Limestone Slurry Filtrate Test 1	Limestone Slurry Filtrate Test 2	Limestone Slurry Filtrate Test 3
Sample Date	11/05/2004	11/05/2004	11/05/2004
Analytical No.	20045530	20045531	20045532
Ca (µg/mL)	621	649	639
Al (µg/mL)	< 0.53	< 0.53	< 0.53
SiO_2 (µg/mL)	2.74	2.69	2.63
Total Iron (µg/mL)	< 0.53	< 0.53	< 0.53
Mg (µg/mL)	1,050	1,085	1,135
K (µg/mL)	105	107	113
Na (µg/mL)	236	239	256
Ammonia as NH_3 (µg/mL)	< 10	< 10	< 10
Cl (µg/mL)	1,670	1,620	1,650
Nitrate as N (µg/mL)	< 0.02	< 0.02	0.02
SO_4 (µg/mL)	3,918	4,010	4,164
Hg (µg/L)	< 1.0	< 1.0	< 1.0

C. ESP hopper ash

There are two ESP boxes (A and B) for Unit 4. Each box is divided into five fields and there are four ash hoppers in each field. A schematic of the layout of the ESP hoppers is shown in Figure 10. One of the ESP hoppers sampled is shown in Figure 11. About 1-2 lb of ash was collected using an ash sampling "thief" which consisted of two concentric tubes with openings cut through both tubes. A photograph of this ash sampling device is shown in Figure 12. After removing the screw caps of the rod-out ports, the thief was inserted into the ash hoppers through the ports. The inner tube was rotated to allow the ash to drop into the tube. The inner tube was then rotated to close the openings and the thief was then pulled out of the hopper. The thief was then tilted to allow the ash to fall into a one-gallon sized plastic bag through the opening at the end of the thief. Listed in Tables 21-24 are the results of analyses of the ESP ash samples collected during the August tests. Because the November sampling was focused on the FGD scrubber inlet and outlet, ESP ash was not sampled in the non-ozone season tests.

In tests conducted at other plants, CONSOL R&D has observed that the mercury content in the ESP ash samples tend to correlate with the carbon content in the samples. In the tests at this plant, however, the correlation is not very strong. Figure 13 shows an R^2 of only 0.56 for the linear regression line between ESP ash carbon concentration and mercury concentration. This is due to the low carbon content (<3 wt %) of the ESP ash combined with the relatively high ESP gas temperature (327 °F) compared with the other plants. Low carbon content tends to reduce the amount of mercury captured in the ESP ash, and high ESP gas temperature tends to reduce the amount of mercury captured by the carbon in the ash.

Table 21. Results of analyses of ESP hopper ash samples collected in Test 1

Sample ID	ESP Ash 1A21	ESP Ash 1A31	ESP Ash 1A41	ESP Ash 1A22	ESP Ash 1A32	ESP Ash 1A42
ESP Hopper No.	#1A21	#1A31	#1A41	#1A22	#1A32	#1A42
ESP Electric Field	First Field			Second Field		
Sample Date	08/17/2004			08/17/2004		
Analytical No.	20044161	20044162	20044163	20044164	20044165	20044166
Moisture (%)	0.08	0.02	0.05	0.04	0.04	0.05
Ash (%, dry)	98.91	98.78	98.83	98.59	98.38	98.37
Carbon (%, dry)	0.77	0.80	0.81	0.84	0.96	0.84
Total Sulfur (%, dry)	0.28	0.28	0.35	0.37	0.41	0.44
Hg (ppm, as det'd)	0.017	0.008	0.008	0.022	0.015	0.007
Major Ash Elements (%, dry)						
SiO_2	49.17	48.72	49.54	48.94	48.89	49.13
Al_2O_3	23.71	23.05	23.38	23.94	23.89	24.04
TiO_2	1.14	1.12	1.13	1.12	1.12	1.14
Fe_2O_3	20.56	20.77	19.72	19.77	19.41	18.59
CaO	1.84	1.84	2.08	1.96	2.05	1.91
MgO	0.99	0.99	1.04	1.01	1.04	1.05
Na_2O	0.35	0.32	0.44	0.42	0.42	0.42
K_2O	2.87	2.74	2.83	2.90	3.00	3.08
P_2O_5	0.23	0.24	0.28	0.30	0.29	0.31
SO_3	0.69	0.69	0.87	0.93	1.02	1.09

Table 21. (Continued)

Sample ID	ESP Ash 1A33	ESP Ash 1A43	ESP Ash 1A34	ESP Ash 1A44	ESP Ash 1A35	ESP Ash 1A45
ESP Hopper No.	#1A33	#1A43	#1A34	#1A44	#1A35	#1A45
ESP Electric Field	Third Field		Fourth Field		Fifth Field	
Sample Date	08/17/2004		08/17/2004		08/17/2004	
Analytical No.	20044167	20044168	20044169	20044170	20044171	20044172
Moisture (%)	0.01	0.04	0.05	0.05	0.13	0.01
Ash (%, dry)	97.98	97.89	97.53	97.46	97.20	96.85
Carbon (%, dry)	1.09	1.07	1.21	1.26	2.13	1.49
Total Sulfur (%, dry)	0.50	0.52	0.60	0.62	0.25	0.82
Hg (ppm, as det'd)	0.015	0.009	0.024	0.016	0.081	0.022
Major Ash Elements (%, dry)						
SiO_2	49.25	48.90	48.71	48.69	48.76	48.82
Al_2O_3	24.28	23.48	23.06	23.08	21.80	23.55
TiO_2	1.15	1.13	1.12	1.12	1.00	1.13
Fe_2O_3	18.45	18.38	18.57	18.15	20.89	17.11
CaO	1.87	1.93	2.14	2.10	2.40	2.35
MgO	1.07	1.05	1.03	1.03	0.93	1.01
Na_2O	0.39	0.38	0.39	0.40	0.30	0.43
K_2O	3.09	2.85	2.79	2.76	2.39	2.73
P_2O_5	0.34	0.34	0.36	0.36	0.17	0.35
SO_3	1.24	1.31	1.51	1.56	0.62	2.04

Table 22. Results of analyses of ESP hopper ash samples collected in Test 2

Sample ID	ESP Ash 2A21	ESP Ash 2A31	ESP Ash 2A41	ESP Ash 2A22	ESP Ash 2A32	ESP Ash 2A42
ESP Hopper No.	#1A21	#1A31	#1A41	#1A22	#1A32	#1A42
ESP Electric Field	First Field			Second Field		
Sample Date	08/18/2004			08/18/2004		
Analytical No.	20044173	20044174	20044175	20044176	20044177	20044178
Moisture (%)	0.02	0.16	0.07	0.01	0.04	0.15
Ash (%, dry)	98.76	98.71	98.88	98.40	98.12	98.36
Carbon (%, dry)	0.88	0.90	0.62	0.91	1.14	0.93
Total Sulfur (%, dry)	0.27	0.27	0.33	0.36	0.40	0.38
Hg (ppm, as det'd)	0.013	0.009	0.008	0.022	0.012	0.007
Major Ash Elements (%, dry)						
SiO_2	49.16	49.00	49.94	49.06	49.21	49.54
Al_2O_3	21.61	22.11	23.15	22.03	22.27	22.67
TiO_2	1.09	1.10	1.14	1.10	1.11	1.13
Fe_2O_3	22.61	21.00	19.65	21.50	20.71	19.27
CaO	1.71	1.79	2.08	1.74	1.74	1.90
MgO	0.98	0.98	1.02	1.01	1.02	1.03
Na_2O	0.29	0.32	0.44	0.30	0.31	0.36
K_2O	2.69	2.82	2.90	2.87	2.98	2.90
P_2O_5	0.26	0.28	0.27	0.31	0.33	0.34
SO_3	0.67	0.68	0.82	0.91	0.99	0.96

Table 22. (Continued)

Sample ID	ESP Ash 2A33	ESP Ash 2A43	ESP Ash 2A34	ESP Ash 2A44	ESP Ash 2A35	ESP Ash 2A45
ESP Hopper No.	#1A33	#1A43	#1A34	#1A44	#1A35	#1A45
ESP Electric Field	Third Field		Fourth Field		Fifth Field	
Sample Date	08/18/2004		08/18/2004		08/18/2004	
Analytical No.	20044179	20044180	20044181	20044182	20044183	20044184
Moisture (%)	0.12	0.15	0.10	0.16	0.17	0.17
Ash (%, dry)	97.54	97.66	97.27	97.22	96.28	96.81
Carbon (%, dry)	1.33	1.14	1.31	1.24	2.30	1.60
Total Sulfur (%, dry)	0.50	0.57	0.65	0.71	0.24	0.70
Hg (ppm, as det'd)	0.014	0.009	0.018	0.016	0.145	0.018
Major Ash Elements (%, dry)						
SiO_2	48.98	48.88	48.74	48.73	47.61	48.26
Al_2O_3	22.35	22.41	22.38	22.54	20.54	22.09
TiO_2	1.12	1.13	1.10	1.11	0.97	1.07
Fe_2O_3	19.79	19.58	19.67	19.10	25.25	19.37
CaO	1.81	1.86	2.02	1.97	2.24	2.20
MgO	1.03	1.03	1.02	1.02	0.90	0.98
Na_2O	0.32	0.32	0.35	0.38	0.26	0.35
K_2O	2.93	2.94	2.93	2.95	2.31	2.66
P_2O_5	0.37	0.37	0.37	0.38	0.17	0.32
SO_3	1.24	1.42	1.62	1.77	0.60	1.76

Table 23. Results of analyses of ESP hopper ash samples collected in Test 3

Sample ID	ESP Ash 3A21	ESP Ash 3A31	ESP Ash 3A41	ESP Ash 3A22	ESP Ash 3A32	ESP Ash 3A42
ESP Hopper No.	#1A21	#1A31	#1A41	#1A22	#1A32	#1A42
ESP Electric Field	First Field			Second Field		
Sample Date	08/18/2004			08/18/2004		
Analytical No.	20044185	20044186	20044187	20044188	20044189	20044190
Moisture (%)	0.10	0.10	0.06	0.09	0.11	0.08
Ash (%, dry)	99.02	98.80	98.87	98.54	98.37	98.37
Carbon (%, dry)	0.78	0.85	0.65	0.93	1.00	0.98
Total Sulfur (%, dry)	0.28	0.30	0.33	0.38	0.40	0.42
Hg (ppm, as det'd)	0.013	0.007	0.008	0.016	0.011	0.007
Major Ash Elements (%, dry)						
SiO_2	48.77	49.38	49.98	48.82	49.10	49.31
Al_2O_3	22.33	22.20	23.21	22.11	22.42	22.61
TiO_2	1.11	1.10	1.12	1.10	1.12	1.12
Fe_2O_3	21.76	21.68	19.10	21.49	21.14	19.88
CaO	2.19	1.87	2.10	2.16	2.01	1.94
MgO	0.97	0.98	1.02	0.98	1.01	1.02
Na_2O	0.32	0.33	0.43	0.32	0.33	0.35
K_2O	2.76	2.92	2.89	2.87	2.87	2.98
P_2O_5	0.21	0.24	0.26	0.27	0.28	0.31
SO_3	0.71	0.76	0.83	0.95	1.00	1.06

Table 23. (Continued)

Sample ID	ESP Ash 3A33	ESP Ash 3A43	ESP Ash 3A34	ESP Ash 3A44	ESP Ash 3A35	ESP Ash 3A45
ESP Hopper No.	#1A33	#1A43	#1A34	#1A44	#1A35	#1A45
ESP Electric Field	Third Field		Fourth Field		Fifth Field	
Sample Date	08/18/2004		08/18/2004		08/18/2004	
Analytical No.	20044191	20044192	20044193	20044194	20044195	20044196
Moisture (%)	0.09	0.12	0.13	0.18	0.11	0.09
Ash (%, dry)	97.80	97.71	97.40	97.32	97.20	96.84
Carbon (%, dry)	1.19	1.17	1.31	1.21	2.05	1.28
Total Sulfur (%, dry)	0.51	0.58	0.63	0.68	0.43	0.87
Hg (ppm, as det'd)	0.012	0.009	0.020	0.016	0.040	0.010
Major Ash Elements (%, dry)						
SiO_2	49.26	49.39	49.04	48.84	48.63	48.67
Al_2O_3	23.11	22.96	22.88	22.73	21.83	22.98
TiO_2	1.12	1.12	1.11	1.11	1.02	1.11
Fe_2O_3	19.44	19.33	19.03	18.90	21.17	18.23
CaO	1.84	1.80	1.95	1.97	2.14	2.12
MgO	1.03	1.03	1.02	1.03	0.95	1.01
Na_2O	0.36	0.35	0.39	0.36	0.30	0.39
K_2O	3.36	3.14	3.15	2.95	2.76	2.89
P_2O_5	0.33	0.36	0.35	0.35	0.21	0.36
SO_3	1.28	1.46	1.57	1.69	1.08	2.18

Table 24. Results of analyses of ESP hopper ash samples collected in Test 4

Sample ID	ESP Ash 4A11	ESP Ash 4A21	ESP Ash 4A31	ESP Ash 4A41	ESP Ash 4A12	ESP Ash 4A22	ESP Ash 4A32	ESP Ash 4A42
ESP Hopper No.	#1A11	#1A21	#1A31	#1A41	#1A12	#1A22	#1A32	#1A42
ESP Electric Field	First Field				Second Field			
Sample Date	08/19/2004				08/19/2004			
Analytical No.	20044197	20044198	20044199	20044200	20044201	20044202	20044203	20044204
Moisture (%)	0.13	0.09	0.07	0.12	0.19	0.07	0.10	0.03
Ash (%, dry)	98.80	99.11	98.96	98.64	98.40	98.62	98.37	98.41
Carbon (%, dry)	0.75	0.74	0.83	0.77	0.99	0.90	1.05	0.99
Total Sulfur (%, dry)	0.28	0.21	0.25	0.36	0.39	0.33	0.37	0.37
Hg (ppm, as det'd)	0.016	0.013	0.005	0.006	0.022	0.018	0.011	0.006
Major Ash Elements (%, dry)								
SiO_2	50.18	49.75	49.93	48.66	49.85	48.74	49.31	49.35
Al_2O_3	21.95	21.85	21.51	21.42	22.20	21.28	21.48	21.83
TiO_2	1.09	1.08	1.09	1.10	1.13	1.10	1.11	1.12
Fe_2O_3	20.50	22.06	22.05	21.65	19.76	21.10	20.60	20.21
CaO	1.79	1.70	1.78	2.02	1.77	1.88	1.85	1.86
MgO	1.01	0.99	0.97	0.97	1.04	1.00	1.02	1.02
Na_2O	0.33	0.29	0.29	0.32	0.32	0.28	0.28	0.31
K_2O	2.97	2.88	2.80	2.66	3.03	2.69	2.68	2.85
P_2O_5	0.26	0.21	0.20	0.24	0.34	0.27	0.32	0.32
SO_3	0.69	0.53	0.62	0.91	0.98	0.82	0.92	0.93

Table 24. (Continued)

Sample ID	ESP Ash 4A13	ESP Ash 4A23	ESP Ash 4A33	ESP Ash 4A43	ESP Ash 4A14	ESP Ash 4A24	ESP Ash 4A34	ESP Ash 4A44
ESP Hopper No.	#1A13	#1A23	#1A33	#1A43	#1A14	#1A24	#1A34	#1A44
ESP Electric Field	Third Field				Fourth Field			
Sample Date	08/19/2004				08/19/2004			
Analytical No.	20044205	20044206	20044207	20044208	20044209	20044210	20044211	20044212
Moisture (%)	0.22	0.12	0.22	0.13	0.38	0.13	0.06	0.16
Ash (%, dry)	98.11	97.97	98.03	98.10	97.48	97.89	97.75	97.65
Carbon (%, dry)	0.87	1.16	1.02	0.98	1.25	1.37	1.12	1.14
Total Sulfur (%, dry)	0.53	0.46	0.48	0.49	0.58	0.42	0.56	0.60
Hg (ppm, as det'd)	0.029	0.025	0.012	0.008	0.038	0.032	0.014	0.011
Major Ash Elements (%, dry)								
SiO_2	49.92	49.00	48.80	48.75	48.66	48.37	49.26	48.44
Al_2O_3	22.62	21.90	21.81	21.64	22.45	21.77	23.01	22.37
TiO_2	1.13	1.09	1.12	1.11	1.14	1.05	1.14	1.13
Fe_2O_3	17.64	20.08	19.53	18.89	19.89	21.97	19.57	19.33
CaO	1.99	1.90	1.95	1.87	1.95	1.94	1.87	1.88
MgO	1.06	1.02	1.02	1.03	1.03	0.99	1.07	1.07
Na_2O	0.39	0.33	0.32	0.33	0.32	0.30	0.33	0.33
K_2O	3.08	2.92	2.86	2.83	2.83	2.78	2.98	2.79
P_2O_5	0.39	0.34	0.35	0.35	0.36	0.26	0.38	0.38
SO_3	1.32	1.15	1.19	1.22	1.45	1.04	1.41	1.49

Table 24. (Continued)

Sample ID	ESP Ash 4A15	ESP Ash 4A25	ESP Ash 4A35	ESP Ash 4A45
ESP Hopper No.	#1A15	#1A25	#1A35	#1A45
ESP Electric Field	Fifth Field			
Sample Date	08/19/2004			
Analytical No.	20044213	20044214	20044215	20044216
Moisture (%)	0.34	0.14	0.17	0.17
Ash (%, dry)	96.72	97.44	96.83	96.89
Carbon (%, dry)	1.75	2.04	2.25	1.46
Total Sulfur (%, dry)	0.66	0.38	0.40	0.69
Hg (ppm, as det'd)	0.048	0.050	0.048	0.011
Major Ash Elements (%, dry)				
SiO_2	47.43	47.64	48.62	48.90
Al_2O_3	21.70	21.17	21.76	22.62
TiO_2	1.11	1.02	1.04	1.11
Fe_2O_3	20.16	22.41	21.68	19.73
CaO	1.91	1.92	1.92	2.05
MgO	1.02	0.98	0.98	1.03
Na_2O	0.32	0.28	0.27	0.33
K_2O	2.93	2.67	2.65	2.77
P_2O_5	0.28	0.20	0.21	0.34
SO_3	1.66	0.94	0.99	1.73

D. FGD slurry

This unit has two scrubber modules. A bleed stream of the liquor is pumped iinto an oxidizer, where the calcium sulfite rich liquor is oxidized into gypsum that is sold to a wallboard manufacturing plant.

The FGD slurry samples were collected from the transfer pipes connecting the recycle tanks to the oxidizers. The slurry sample was allowed to discharge from the pipe into a sink for about 20 seconds before a 500 mL of slurry sample was collected. Figure 14 is a picture of a transfer pipe and its corresponding sink.

Upon arrival at CONSOL R&D's analytical lab, each slurry sample was filtered to generate a filtrate and a solid residue (i.e., filter cake) samples. The air-dried solids and the filtrates were analyzed separately. Listed in Tables 25 and 26 are the results of analyses of the FGD slurry solids samples. Listed in Tables 27 and 28 are the results of analyses of the limestone slurry filtrate samples.

Table 25. Results of analyses of FGD slurry solids samples – ozone season tests

Sample ID	FGDS-1-A	FGDS-1-B	FGDS-2-A	FGDS-2-B	FGDS-3-A	FGDS-3-B	FGDS-4-A	FGDS-4-B
Sample Date	08/17/2004	08/17/2004	08/18/2004	08/18/2004	08/18/2004	08/18/2004	08/19/2004	08/19/2004
Analytical No.	20044152	20044153	20044154	20044155	20044156	20044157	20044158	20044159
Solids in original sample (%)	10.60	10.20	9.10	9.60	10.80	10.70	11.00	10.43
Density of original sample (g/mL)	1.050	1.042	1.041	1.036	1.045	1.040	1.040	1.044
Moisture (%)	0.00	0.00	0.01	0.01	0.01	0.01	0.01	0.01
Ash (%, dry)	93.90	95.12	93.47	92.63	93.84	94.48	93.96	93.94
Carbon (%, dry)	0.52	0.39	0.37	0.45	0.50	0.37	0.46	0.47
Chlorine (%, dry)	0.04	0.02	0.02	0.02	0.02	0.02	0.02	0.02
Hg (ppm, as det'd)	0.303	0.312	0.190	0.274	0.424	0.413	0.231	0.385
Major Ash Elements (%, dry)								
SiO_2	2.45	3.00	2.34	2.94	2.13	1.74	1.56	1.69
Al_2O_3	0.63	0.84	0.66	0.85	0.58	0.49	0.44	0.47
TiO_2	0.02	0.03	0.03	0.03	0.02	0.02	0.02	0.02
Fe_2O_3	0.40	0.54	0.39	0.48	0.38	0.32	0.31	0.33
CaO	38.13	38.51	37.87	38.09	39.02	38.70	39.00	39.03
MgO	0.48	0.56	0.44	0.53	0.40	0.35	0.33	0.36
Na_2O	0.01	0.01	0.01	0	0	0	0	0
K_2O	0.13	0.17	0.14	0.16	0.12	0.11	0.09	0.10
P_2O_5	0	0	0	0	0	0	0	0
SO_3	49.42	49.45	49.25	49.14	50.65	50.57	51.16	50.99

Table 26. Results of analyses of FGD slurry solids samples – non-ozone season tests

Sample ID	FGDS-1-A	FGDS-1-B	FGDS-2-A	FGDS-2-B	FGDS-3-A	FGDS-3-B
Sample Date	11/05/2004					
Test No.	1		2		3	
Analytical No.	20045584	20045585	20045586	20045587	20045588	20045589
Solids in original sample [%]	13.2	13.3	12.5	7.0	13.3	15.0
Specific Gravity of original sample [g/cc]	1.061	1.046	1.036	1.030	1.021	1.021
Moisture [%]	6.26	6.22	6.58	9.01	15.29	16.01
Ash [%, dry]	96.90	95.97	96.96	94.38	96.42	96.21
Carbon [%, dry]	0.59	0.83	0.61	1.22	0.54	0.73
Total Sulfur [%, dry]	21.53	20.91	21.17	18.92	21.36	21.32
Chlorine [%, dry]	0.020	0.014	0.013	0.015	0.011	0.006
Hg [ppm, as det'd]	0.322	0.246	0.415	0.506	0.355	0.229
Major Ash Elements [%, dry]						
SiO_2	3.03	2.88	3.38	5.51	3.03	2.66
Al_2O_3	0.64	0.65	0.75	1.33	0.67	0.60
TiO_2	0.02	0.02	0.02	0.05	0.02	0.02
Fe_2O_3	0.46	0.47	0.51	0.88	0.46	0.43
CaO	43.08	43.42	42.42	40.18	42.14	42.49
MgO	0.69	0.65	0.78	1.23	0.71	0.62
Na_2O	0.02	0.02	0.02	0.03	0.01	0.01
K_2O	0.15	0.13	0.17	0.27	0.15	0.12
P_2O_5	0.00	0.00	0.00	0.00	0.00	0.00
SO_3	53.83	52.28	52.93	47.30	53.41	53.30

Table 27. Results of analyses of FGD slurry filtrate samples – ozone season tests

Sample ID	FGD Slurry Filtrate-1-A	FGD Slurry Filtrate-1-B	FGD Slurry Filtrate-2-A	FGD Slurry Filtrate-2-B	FGD Slurry Filtrate-3-A	FGD Slurry Filtrate-3-B	FGD Slurry Filtrate-4-A	FGD Slurry Filtrate-4-B
Test No.	1		2		3		4	
Sample Date	08/17/2004		08/18/2004		08/18/2004		08/19/2004	
Analytical No.	20044247	20044248	20044249	20044250	20044251	20044252	20044253	20044254
Ca (µg/mL)	611	634	604	555	545	553	549	549
Total Iron (µg/mL)	0.44	0.54	0.45	0.81	1.10	1.28	1.16	1.14
Mg (µg/mL)	1,970	1,970	1,830	1,750	1,790	1,730	1,860	1,790
K (µg/mL)	114	105	127	124	124	120	138	134
Na (µg/mL)	264.0	253	283.0	279	277	270	304.0	296
Ammonia as NH_3 (µg/mL)	< 10	< 10	< 10	< 10	< 10	< 10	< 10	< 10
Cl (µg/mL)	2,800	2,800	2,700	2,700	2,700	2,650	2,750	2,750
NO_3 as N (µg/mL)	< 10	< 10	<10	<10	<10	<10	<10	<10
SO_4 (µg/mL)	6,930	7,180	6,880	6,630	6,560	6,480	6,910	6,580
Hg (µg/L)	29.9	23.6	28.4	11.1	14.1	2.1	11.6	1.8

Table 28. Results of analyses of FGD slurry filtrate samples – non-ozone season tests

Sample ID	FGD Slurry Filtrate Test 1-A	FGD Slurry Filtrate Test 1-B	FGD Slurry Filtrate Test 2-A	FGD Slurry Filtrate Test 2-B	FGD Slurry Filtrate Test 3-A	FGD Slurry Filtrate Test 3-B
Test No.	1		2		3	
FGD Module ID	A	B	A	B	A	B
Sample Date	11/05/2004		11/05/2004		11/05/2004	
Analytical No.	20045539	20045540	20045541	20045542	20045543	20045544
Ca (µg/mL)	594	651	626	654	636	599
Al (µg/mL)	0.94	0.96	1.34	1.24	1.23	1.09
SiO_2 (µg/mL)	15.86	18.55	17.32	18.95	16.96	17.13
Total Iron (µg/mL)	0.57	< 0.53	1.30	< 0.53	1.64	< 0.53
Mg (µg/mL)	2,055	2,087	2,127	2,119	2,160	1,931
K (µg/mL)	159	160	155	161	159	148
Na (µg/mL)	336	341	332	346	339	316
Ammonia as NH_3 (µg/mL)	< 10	< 10	< 10	< 10	< 10	< 10
Cl (µg/mL)	3,340	3,150	3,340	3,220	3,320	3,180
Nitrate as N (µg/mL)	25.0	23.5	17.4	26.1	30.6	21.4
SO_4 (µg/mL)	6,600	6,775	6,880	6,871	6,980	6,260
Hg (ng/mL)	< 1.0	2.2	< 1.0	2.2	< 1.0	6.9

E. FGD makeup water

CONSOL R&D personnel collected an FGD makeup water sample of about 250 mL at the same time the FGD slurry sample was collected. Listed in Tables 29 and 30 are the results of analyses of the makeup water samples.

Table 29. Results of analyses of FGD makeup water samples – ozone season tests

Sample ID	FGD Makeup Water Test 1	FGD Makeup Water Test 2	FGD Makeup Water Test 3	FGD Makeup Water Test 4
Test No.	1	2	3	4
Sample Date	08/17/2004	08/18/2004	08/18/2004	08/19/2004
Analytical No	20044255	20044256	20044257	20044258
Ca (µg/mL)	683	601	584	582
Total Iron (µg/mL)	0.15	0.24	0.25	0.18
Mg (µg/mL)	1,310	1,150	1,240	1,230
K (µg/mL)	73	67	91	89
Na (µg/mL)	181	166	213	208
Ammonia as NH_3 (µg/mL)	<10	< 10	< 10	< 10
Cl (µg/mL)	1,850	1,850	1,950	1,900
NO_3 as N (µg/mL)	< 10	< 10	< 10	< 10
SO_4 (µg/mL)	5,140	4,540	4,790	4,760
Hg (µg/L)	< 1.0	< 1.0	1.3	< 1.0

Table 30 Results of analyses of FGD makeup water samples – non-ozone season tests

Sample ID	FGD Makeup Water Test 1	FGD Makeup Water Test 2	FGD Makeup Water Test 3
Sample Date	11/05/2004	11/05/2004	11/05/2004
Analytical No.	20045536	20045537	20045538
Ca (μg/mL)	518	491	573
Al (μg/mL)	4.70	4.33	4.33
SiO_2 (μg/mL)	9.59	8.83	9.52
Total Iron (μg/mL)	< 0.53	< 0.53	< 0.53
Mg (μg/mL)	1,220	1,154	1,158
K (μg/mL)	113	109	102
Na (μg/mL)	251	242	221
Ammonia as NH_3 (μg/mL)	< 10	< 10	< 10
Cl (μg/mL)	1,720	1,720	1,720
Nitrate as N (μg/mL)	3.76	0.03	3.99
SO_4 (μg/mL)	4,392	4,153	4,460
Hg (μg/L)	< 1.0	< 1.0	1.1

F. ME wash water samples

The ME wash water was collected by CONSOL R&D personnel from the ME wash water storage tank. About 250 mL of sample was collected each time. Listed in Tables 31 and 32 are the results of analyses of the ME wash water samples. The concentration of mercury was below the detection limit of 1.0 μg/L for all of the samples.

Table 31. Results of analyses of ME wash water samples – ozone season tests.

Sample ID	ME Wash Water Test 1	ME Wash Water Test 2	ME Wash Water Test 3	ME Wash Water Test 4
Test No.	1	2	3	4
Sample Date	08/17/2004	08/18/2004	08/18/2004	08/19/2004
Analytical No	20044259	20044260	20044261	20044262
Ca (µg/mL)	40.5	40.0	40.1	40.0
Total Iron (µg/mL)	< 0.05	0.21	< 0.05	< 0.05
Mg (µg/mL)	12.1	11.8	11.5	11.5
K (µg/mL)	3.83	3.82	3.67	3.66
Na (µg/mL)	29.9	30.7	29.1	29.3
Ammonia as NH_3 (µg/mL)	<10	< 10	< 10	< 10
Cl (µg/mL)	200	200	150	150
NO_3 as N (µg/mL)	< 10	< 10	< 10	< 10
SO_4 (µg/mL)	68.0	65.9	64.6	64.3
Hg (µg/L)	< 1.0	< 1.0	< 1.0	< 1.0

Table 32. Results of analyses of ME wash water samples – non-ozone season tests.

Sample ID	ME Wash Water Test 1	ME Wash Water Test 2	ME Wash Water Test 3
Sample Date	11/05/2004	11/05/2004	11/05/2004
Analytical No.	20045533	20045534	20045535
Ca (µg/mL)	43.9	43.0	41.1
Al (µg/mL)	< 0.53	< 0.53	< 0.53
SiO_2 (µg/mL)	2.79	3.29	2.54
Total Iron (µg/mL)	< 0.53	0.93	< 0.53
Mg (µg/mL)	12.4	11.7	12.5
K (µg/mL)	< 5.35	< 5.35	< 5.35
Na (µg/mL)	13.7	14.1	14.2
Ammonia as NH_3 (µg/mL)	< 10	< 10	< 10
Cl (µg/mL)	15.0	14.0	10.0
Nitrate as N (µg/mL)	0.02	0.02	0.67
SO_4 (µg/mL)	56.1	53.5	55.4
Hg (µg/L)	< 1.0	< 1.0	< 1.0

QUALITY ASSURANCE/QUALITY CONTROL

The sampling and analysis QA/QC procedures are described below.

- Personnel specifically trained and experienced in power plant sampling methods, including the Ontario-Hydro mercury sampling method, conducted all sampling,
- The sampling equipment was maintained and calibrated as required,
- Consistent sample preparation and recovery procedures were used,
- Samples were logged and tracked under the direction of sample team Group Leader,
- Individual calibration curves were developed for each sample matrix,
- NIST Standard Reference Material (SRM) and lab QC samples were analyzed to verify calibration curves,
- Duplicates of selected samples were analyzed to assure repeatability,
- Analyses of selected "spiked" samples were analyzed to assure sample recovery, and
- Interim data were reviewed to assure sample completeness.

All samples were obtained using the procedures described in EPA Method 5 and the Ontario-Hydro mercury speciation draft method. Data were recorded on standard forms, which are included in Appendix A. The field data were reduced using standard "in-house" spreadsheets. Copies of the summary sheets are included in Appendix A. To assure consistency, all of the Ontario-Hydro train components were prepared and recovered under the supervision of a senior technician experienced in the Ontario-Hydro mercury speciation lab techniques. Copies of the recovery sheets are included in Appendix C.

The Ontario-Hydro sampling train analysis consisted of eight sub-samples. Each sub-sample analysis consisted of developing a calibration curve (absorbance versus mercury concentration in solution), checks of field and lab blanks, calibration checks against SRM and lab standards, selected duplicates and selected sample spikes. The laboratory summaries for each of these runs are contained in Appendix C.

A total of 207 individual Ontario-Hydro mercury determinations were completed, including 14 blank samples, 28 NIST SRM or lab QC checks, 11 sample spikes, and 11 duplicate analyses.

I. Blank Samples

A total of 9 blank liquid samples were analyzed. The blank values were all below the detection limit of the analysis method (<0.2 ng/mL for all sample matrices except $KMnO_4$ acid rinse, which is <1.0 ng/mL). Consequently, in this report, blank concentrations were not subtracted out from any mercury determination.

II. NIST Standard Reference Material Checks

Twenty-eight NIST SRM checks were conducted throughout the mercury determinations. Two standards were used in the determinations as detailed in Table 33.

Table 33. NIST SRM analyses

NIST SRM	Standard Value (ng/mL)	Sample Fraction	Samples Analyzed	Average Result (ng/mL)	Percent of Standard	Standard Deviation (ng/mL)	Percent Relative Standard Deviation
1641D	8.0	Ontario Hydro Liquids	23	8.2	102.3	0.19	2.3
		Ontario Hydro Filters	4	8.2	102.3	0.096	1.2
1633b	141	Ontario Hydro Filters	1	141	100.0	--	--

III. Spike Sample Recoveries

A total of 11 samples were spiked with a 2 or 10 µg/L mercury standard and then re-analyzed to determine the percent spike recovery. The result of this QA/QC procedure was an average spike recovery of 94.7% recovery with a ±8.4% standard deviation.

IV. Duplicate Analyses

A total of 9 duplicate analyses were conducted periodically throughout the mercury determinations. The result of this QA/QC procedure was an average mercury determination that was within 12.0% of the original mercury determination, with a ±18.3% standard deviation. Two pairs of duplicate analyses were outside the QA/QC criterion of ±20% of the average value. These two samples were re-digested, re-spiked and the analyses repeated. Both samples passed the criterion after re-digestion. The results from the re-digested samples were used as the reported values. The average recovery for the 9 samples using the re-digested sample values instead of the original values within 6.7% recovery with a ±8.6% standard deviation.

V. Flue Gas Mercury Concentration Detection Limits

For liquid samples, the flue gas mercury concentration was calculated using the following equation:

$$Hg\left[\mu g / m^3\right] = \frac{\left(C_{imp}\ x V_{imp}\right)}{\left(V_{gas}\ x 1000\right)}$$

where: C_{imp} = Mercury concentration of impinger solution [ng/mL (ppb)]
V_{imp} = Liquid volume of impinger solution [mL]
V_{gas} = Flue gas sample volume [dry standard m^3]
1000= Conversion factor [1000 ng per µg]

The flue gas mercury detection limit is reduced when the flue gas sample volume is increased or liquid volume of impinger solution is decreased. The CVAA is calibrated between 0 and 20 ng/mL. Over this range, the calibration curve between absorbance and concentration is linear. The lowest concentration standard used to develop the calibration curve is 0.500 ng/mL. In addition, the detection limit of the liquid CVAA analysis was <0.2 ng/mL for all samples except the HCl rinse of the $KMnO_4$ impingers . The prescribed sampling and recovery procedures result in final liquid volumes varying between 55 and 839 mL. The volume of flue gas collected varied between 0.995 and 2.67 dscm. The sampling variables result in sample-specific flue gas detection limits. The flue gas mercury detection limit for each sample matrix is listed in Table 34. Depending on the matrix, the flue gas mercury detection limit ranged from 0.03 to 0.17 $\mu g/m^3$.

Table 34. Flue gas mercury detection limits

Matrix	Maximum Liquid Volume (mL)	Minimum Gas Volume (dscm)	Flue Gas Detection Limit ($\mu g/m^3$)
Probe Rinse	172	0.995	0.03
KCl Impinger	839	0.995	0.17
HNO_3/H_2O_2 Impingers	193	0.995	0.04
$KMnO_4$ Impingers	253	0.995	0.05
HCl Rinse	100	0.995	0.10

VI. Mercury Material Balance Closure

One important criterion to gauge the overall quality of the tests is to conduct a mass balance to account for the mercury entering and leaving the plant during the time of the tests. The mercury material balance closure (expressed in %) is the total mercury output from the unit divided by the total mercury input. The total mercury input is the sum of the mass flow rates of mercury entering the unit from coal, limestone slurry, ME wash water, and FGD makeup water. The total mercury output is the sum of the mass flow rates of mercury leaving the unit through bottom ash, ESP hopper ash, FGD slurry, and stack flue gas. Because no bottom ash or ESP ash samples were collected in November, balance for the November tests is around the scrubber instead of the entire plant. In this case, the total mercury input is the sum of the mass flow rates of mercury entering the scrubber in the flue gas, limestone slurry, ME wash water, and FGD makeup water, and the total mercury output is the sum of the mass flow rates of mercury leaving the unit through the FGD slurry, and stack flue gas. Tables 35 and 36 summarize the results of the mercury material balance closure calculations. For the four tests conducted during ozone season, the calculated mercury material balance closures ranged from 78% to 85% with an average of 81%. For the three tests conducted during non-ozone season, the calculated mercury material balance closures ranged from 75% to 97% with an average of 87%. The mercury material balance

closures for all individual tests are within the QA/QC criterion of 70-130% for a single test. The average mercury material balance closures of 81% and 87% are within the QA/QC criterion of 80-120% for multiple tests.

Table 35. Summary of material balance closure for mercury, ozone season tests.

Test No.	1	2	3	4
Hg input from Coal (mg/sec)	5.48	5.61	5.42	5.11
Hg input limestone slurry (mg/sec)	0.03	0.04	0.03	0.06
Hg input from FGD makeup water (mg/sec)	0.06	0.01	0.01	0.01
Hg input from ME wash water (mg/sec)	0.04	0.05	0.12	0.05
Total Hg Input (mg/sec)	5.62	5.73	5.60	5.25
Hg output via Bottom Ash (mg/sec)	0.01	0.02	0.02	0.01
Hg output via ESP Hopper Ash (mg/sec)	0.05	0.04	0.04	0.05
Hg output via FGD Slurry Solids (mg/sec)	2.26	2.03	3.38	2.56
Hg output via FGD Slurry Filtrate *mg/sec)	1.69	1.68	0.54	0.46
Hg output via stack gas (mg/sec)	0.52	0.69	0.76	1.07
Total Hg Output (mg/sec)	4.52	4.46	4.74	4.15
Hg Material Balance Closure (output / input)	80%	78%	85%	79%
Average Hg Material Balance Closure (%)	**81 ± 3 %**			

Table 36. Summary of material balance closure for mercury, non-ozone season tests.

Test No.	1	2	3
Hg input from flue gas at FGD inlet (mg/sec)	3.79	6.45	5.30
Hg input limestone slurry (mg/sec)	0.14	0.16	0.15
Hg input from FGD makeup water (mg/sec)	0.03	0.04	0.08
Hg input from ME wash water (mg/sec)	0.02	0.02	0.02
Total Hg Input (mg/sec)	3.97	6.66	5.56
Hg output via FGD Slurry Solids (mg/sec)	2.15	3.83	2.52
Hg output via FGD Slurry Filtrate *mg/sec)	0.07	0.10	0.19
Hg output via stack gas (mg/sec)	1.62	1.96	1.44
Total Hg Output (mg/sec)	3.84	5.90	4.16
Hg Material Balance Closure (output / input)	97%	89%	75%
Average Hg Material Balance Closure (%)	**87 ± 11 %**		

VII. Heat input-based mercury emission

The heat input based mercury emission rates were calculated by using the Ontario-Hydro data and the heat input to the boiler, and the results are summarized in Table 37. The mercury emissions ranged from 1.70 to 2.27 Ib/TBtu with an average emission rate of 1.77 Ib/TBtu during the ozone season tests. The mercury emissions ranged from 2.01 to 3.11 Ib/TBtu with an average emission rate of 2.34 Ib/TBtu during the ozone season tests.

Table 37. Heat input-based mercury emission

Ozone Season Test No.	1	2	3	4
Stack Total Hg [$\mu g/m^3$]	1.07	1.45	1.58	2.22
Stack Flow [DSCMM]	29,200	28,700	29,000	29,000
Stack Hg Flow [mg/sec]	0.52	0.69	0.76	1.07
Stack Hg Flow [lb/hr]	4.14×10^{-3}	5.48×10^{-3}	6.06×10^{-3}	8.49×10^{-3}
Heat Input (MM Btu/Hr)	4,780	4,830	4,780	4,870
Stack Hg Emissions (lb/TBtu)	0.87	1.14	1.27	1.75
Average Stack Hg Emissions (lb/TBtu)	**1.25**			
Non-ozone Season Test No.	**1**	**2**	**3**	
Stack Total Hg [$\mu g/m^3$]	3.45	4.09	2.93	
Stack Flow [DSCMM]	28,200	28,800	29,500	
Stack Hg Flow [mg/sec]	1.62	1.96	1.44	
Stack Hg Flow [lb/hr]	1.28×10^{-2}	1.55×10^{-2}	1.14×10^{-2}	
Heat Input (MM Btu/Hr)	4,780	4,780	4,780	
Stack Hg Emissions (lb/TBtu)	2.68	3.25	2.39	
Average Stack Hg Emissions (lb/TBtu)	**2.77**			

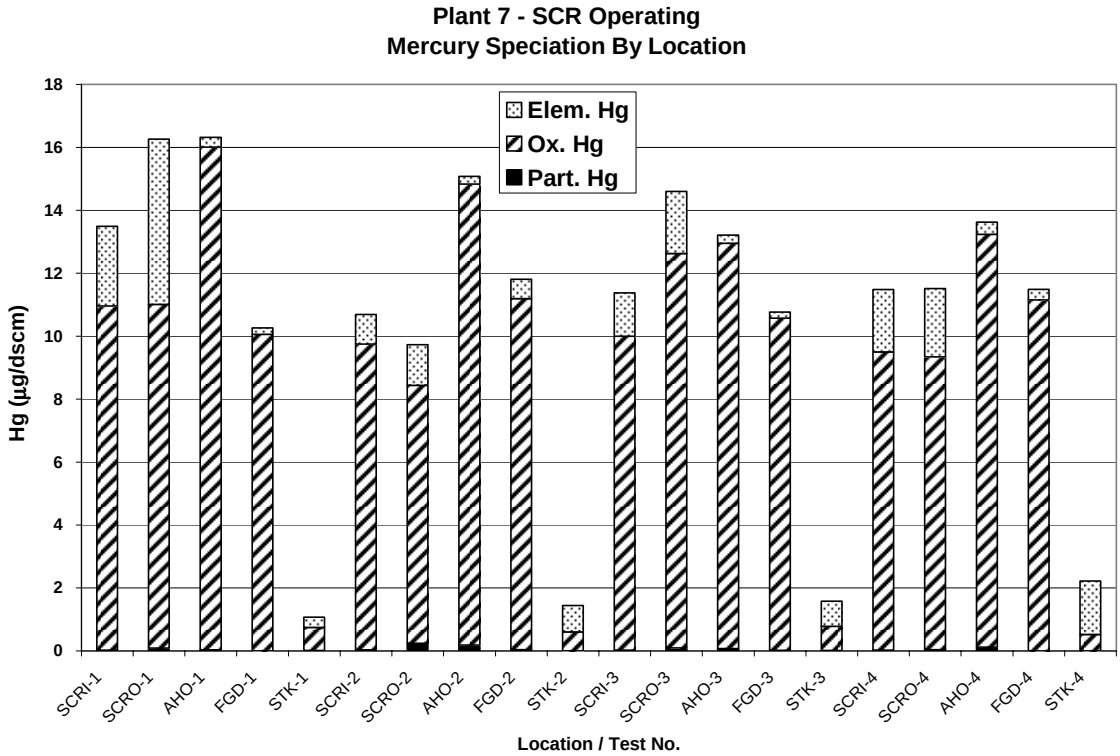

Figure 1. Mercury speciation by location, August 2004 tests (with SCR).

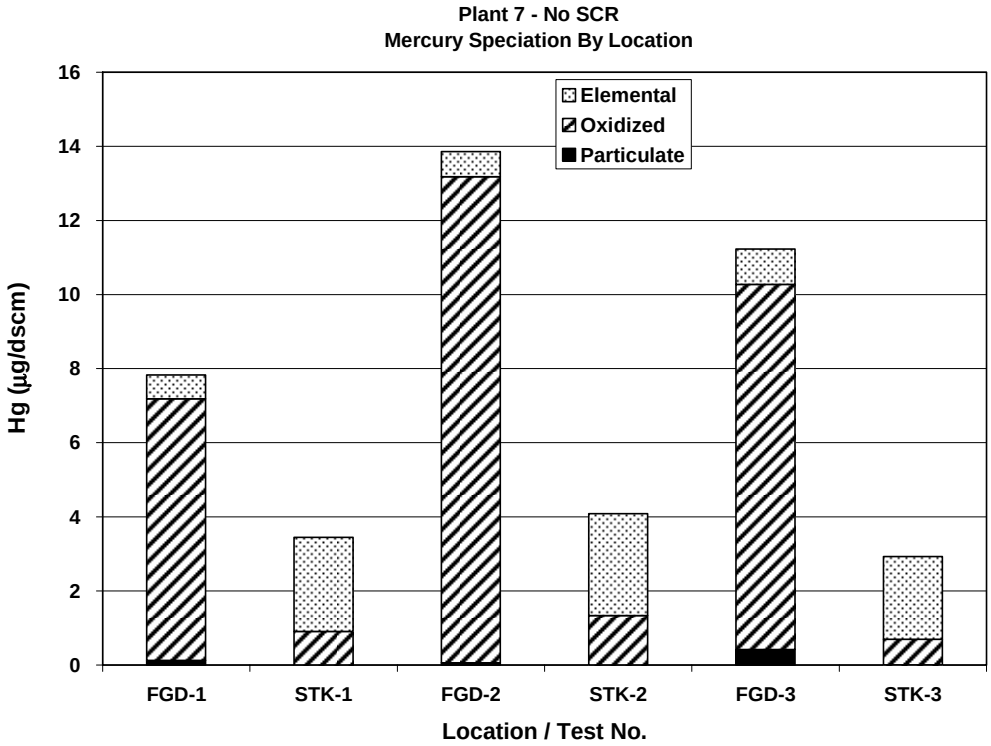

Figure 2. Mercury speciation by location, November 2004 tests (no SCR).

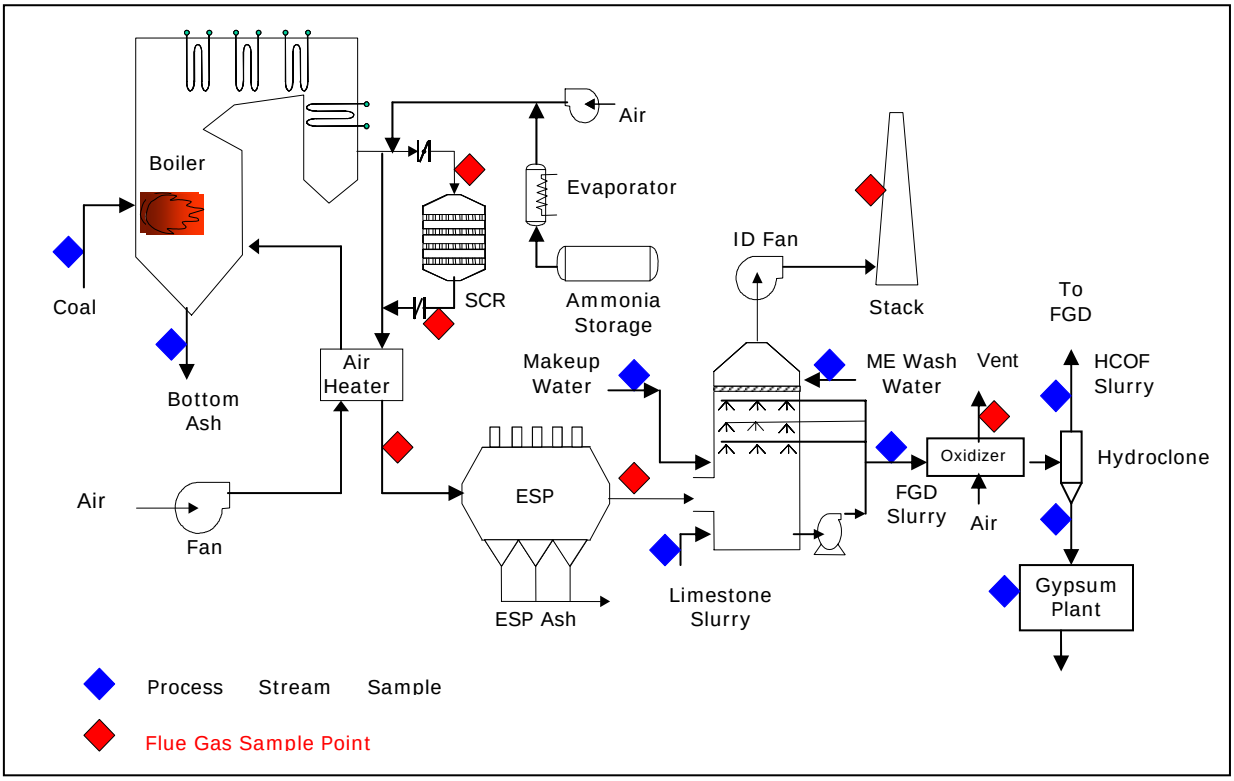

Figure 3. Process flow schematic and sampling locations

Figure 4. SCR inlet mercury sampling train

Figure 5. SCR outlet mercury sampling train

Figure 6. Air heater outlet mercury sampling train

Figure 7. FGD inlet mercury sampling train

Figure 8. Stack sampling location

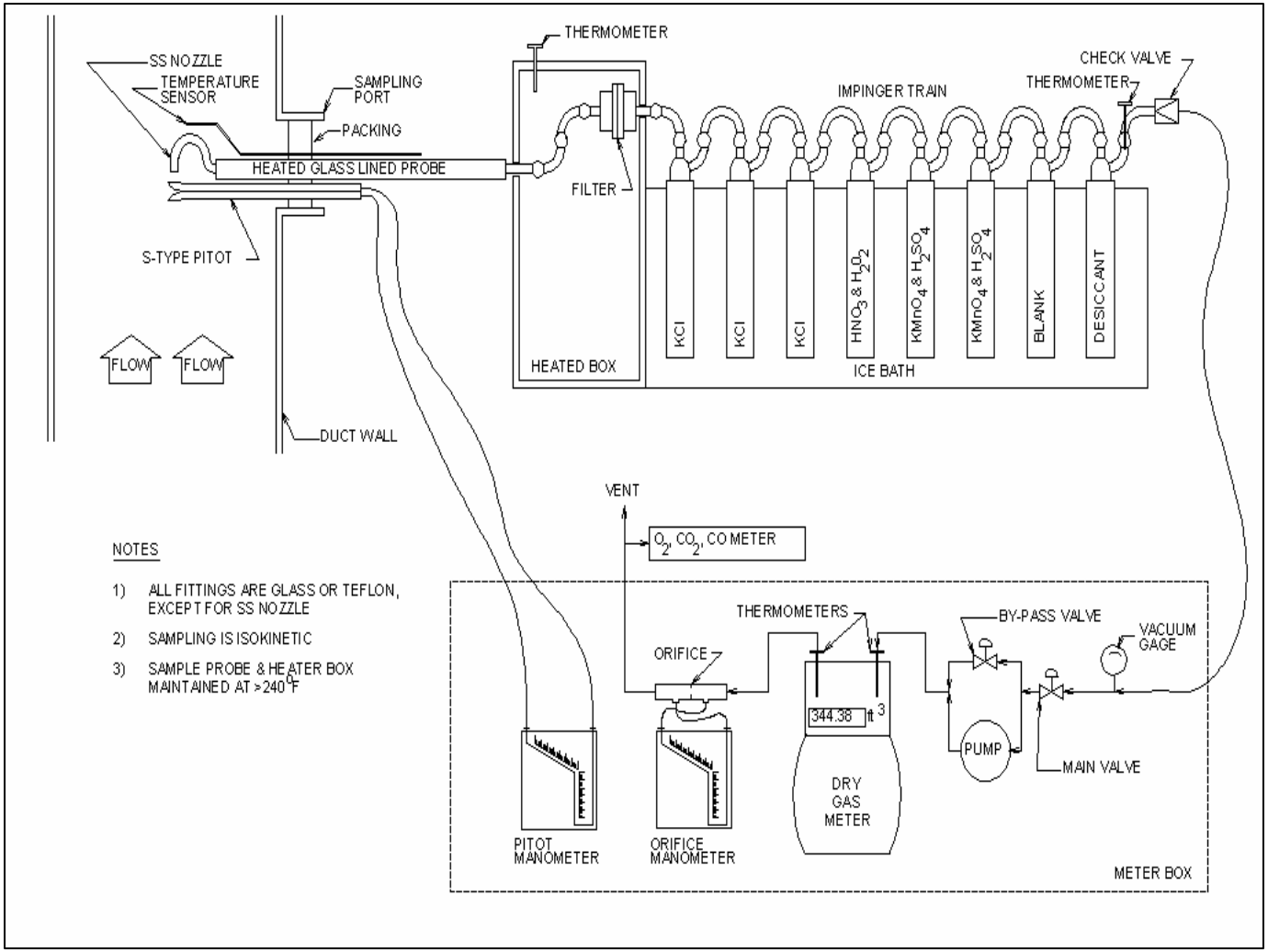

Figure 9. Ontario-Hydro sampling train schematic

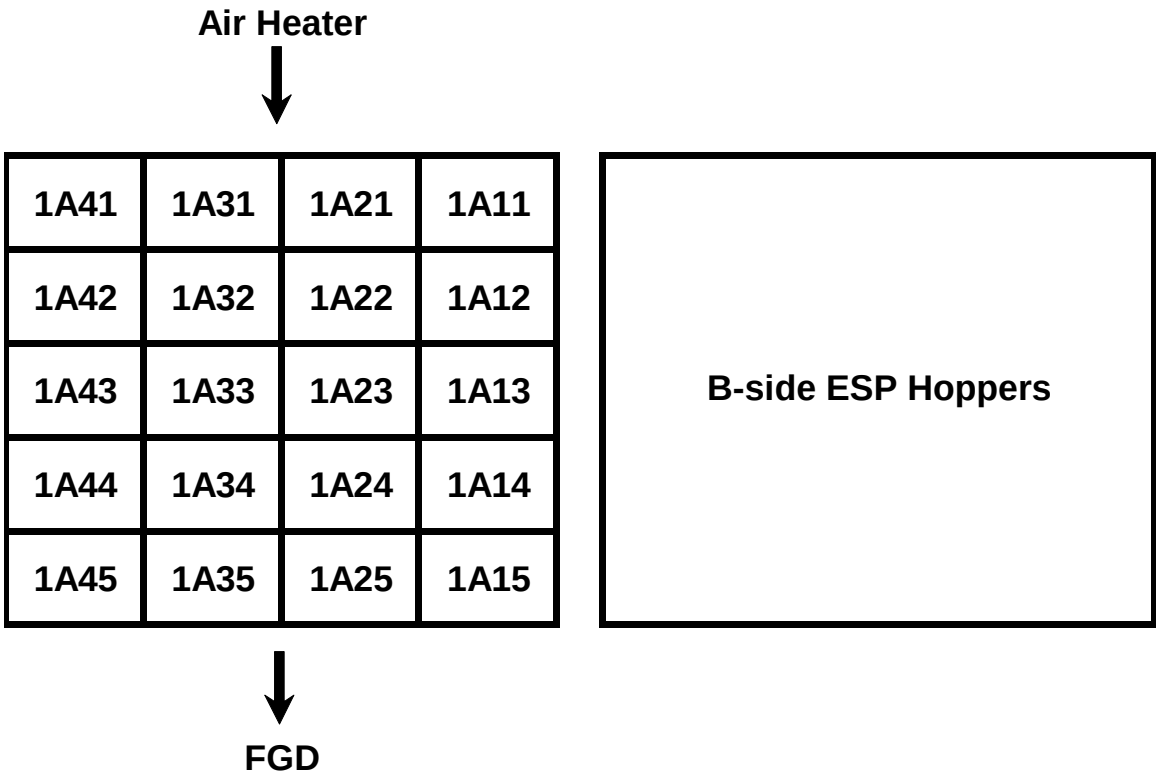

Figure 10. Layout of ESP hoppers

Figure 11. ESP ash hopper sampling

Figure 12. Ash sampling thief

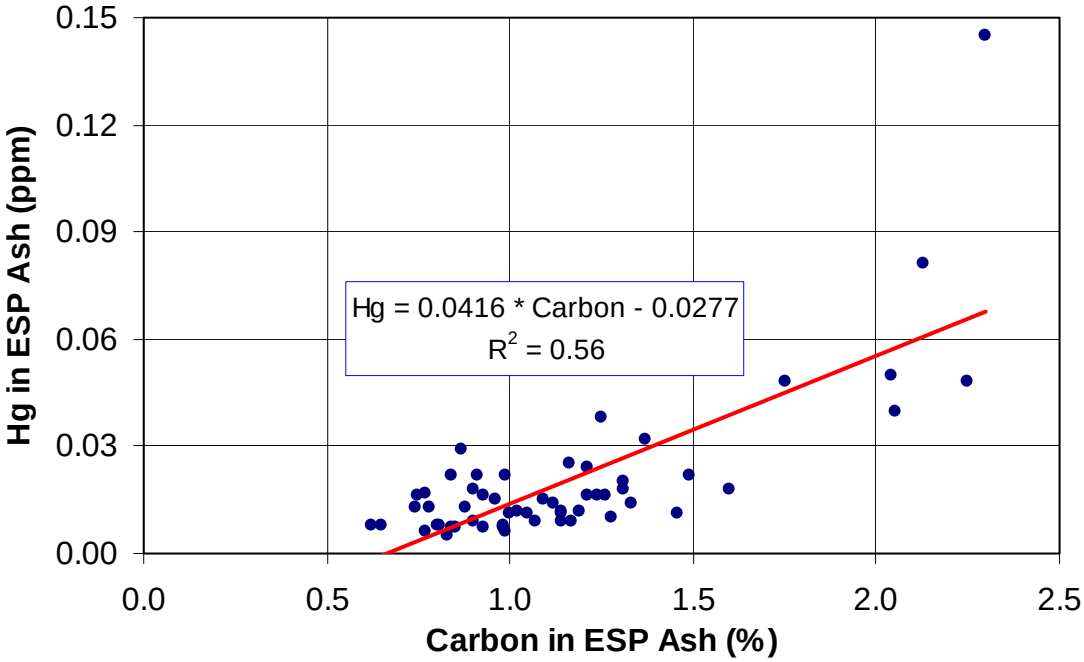

Figure 13. ESP ash mercury vs. carbon plot

Figure 14. FGD slurry sampling location

APPENDIX A

Mercury Sampling Data

- Field Data Sheets
- Mercury Measurement Data Sheets

ONTARIO HYDRO Hg SAMPLING AND SPECIATION FIELD DATA SHEET

TEST ID	SCRI - ONE	METER BOX	N-5	CAL. DATA: delta H	2.009
PLANT	PLANT 7	PITOT TUBE DESC	E-5	Y	1.006
LOCATION	UNIT 1 - SCR INLET	PROBE LENGTH [ft]	6	20" offset C(p)	0.832
DATE	8/17/04	NOZZLE ID [inch]	5/16A 0.312	FILTER BOX SETTING	325
OPERATOR(S)	JAW	%H_2O (Assumed)	7.5	PROBE HTR SETTING	325
AMBIENT TEMP [°F]	95	FILTER ID	1	DUCT X-SECTION	circ ? rect ? other:
BAR. PRESS. [" Hg]	29.51	K FACTOR	4.81	DUCT DIMENSIONS / DUCT AREA	

Comments: Single Point, One Port
"C" port
Probe is rotated 39° counterclockwise to align w/ flow

TRAVERSE POINT [port-inch]	CLOCK TIME (24-hr)	SAMPLE TIME [minute]	STATIC PRES [" H_2O]	PITOT HEAD [" H_2O]	METER DIFF PRESSURE [" H_2O]	METER VACUUM [" Hg]	METER READING [ft^3]	METER TEMP [oF] inlet	METER TEMP [oF] outlet	STACK TEMP [°F]	PROBE TEMP [°F]	FILTER BOX [°F]	LAST IMP TEMP [°F]	METER EXHAUST O_2 [% vol]	METER EXHAUST CO_2 [% vol]	O_2 meter cal's. clock
	13:00	0					735.20									
C-5.5"	13:10	10		0.10	0.48	3.0	741.98	92	93	658	274	NA	51	3.4	16.6	
-20" offset	13:20	20		0.09	0.43	3.0	745.52	93	95	658	290	NA	49	3.4	16.6	21.0 OK
	13:30	30		0.10	0.48	4.0	749.22	95	95	657	300	NA	49	3.0	17.0	
	13:40	40		0.09	0.43	4.5	752.78	96	95	660	300	NA	51	3.2	16.8	20.9 OK
	13:50	50	-3.46	0.09	0.43	5.0	756.35	97	96	658	296	NA	51	3.0	17.0	
	14:00	60		0.10	0.48	6.0	759.99	97	95	659	301	NA	52	3.1	16.9	20.8 OK
	14:10	70		0.10	0.48	7.0	763.72	98	97	659	303	NA	49	3.0	17.0	
	14:20	80		0.10	0.48	8.0	767.45	99	96	660	301	NA	49	3.0	17.0	20.7 recal
	14:30	90		0.09	0.43	8.5	771.03	99	97	661	301	NA	50			
	14:40	100		0.09	0.43	9.5	774.53	99	96	660	299	NA	51	3.0	17.0	21.0 recal
	14:50	110		0.09	0.43	10.5	778.09	99	97	661	297	NA	51			
	15:00	120		0.10	0.48	12.0	781.73	99	97	657	299	NA	51	3.0	17.0	
				AMS												
AVERAGE			-3.46	0.0949	0.455		43.53		96.3	659.0				3.11	16.89	

Sample Train Leak Checks: Pre Test Leak Stop ft^3 @ -12 in. Hg; Post Test Leak Stop ft^3 @ -14 in. Hg

Pitot Tube Leak Checks: PreTest OK @ 7" in. H_2O; Post Test ____ @ ____ in. H_2O

CONSOLENERGY.

Post-test air purge for 10 min @ ΔH = 0.05

NOTE: Purge for 10 minutes at end of sampling.

5, A Stone Read.

ONTARIO HYDRO Hg SAMPLING AND SPECIATION FIELD DATA SHEET

Page 1 of 1

TEST ID	SCRO - ONE	METER BOX	N-1	CAL. DATA: delta H	1.981	Comments: Single Point, Two Ports	
PLANT	PLANT 7	PITOT TUBE DESC	E-15 A	Y	0.984		
LOCATION	UNIT 1 - SCR OUTLET	PROBE LENGTH [ft]	8	C(p)	0.838		
DATE	8/17/04	NOZZLE ID [inch]	7/16 0.436	FILTER BOX SETTING	NA		
OPERATOR(S)	LWR, RMO	%H_2O (Assumed)	7.5	PROBE HTR SETTING	325		
AMBIENT TEMP [°F]		FILTER ID	9, 10	DUCT X-SECTION	circ ? rect ?	other:	
BAR. PRESS. [" Hg]	29.51	K FACTOR	17.21	DUCT DIMENSIONS		DUCT AREA	

TRAVERSE POINT [port-inch]	CLOCK TIME (24-hr)	SAMPLE TIME [minute]	STATIC PRES [" H_2O]	PITOT HEAD [" H_2O] (ΔP)	METER DIFF PRESSURE [" H_2O] (ΔH)	METER VACUUM [" Hg]	METER READING [ft^3]	METER TEMP [oF] inlet (6)	METER TEMP [oF] outlet (4)	STACK TEMP [°F] (1)	PROBE TEMP [°F] (2)	FILTER BOX [°F]	LAST IMP TEMP [°F] (3)	METER EXHAUST O_2 [% vol]	METER EXHAUST CO_2 [% vol]
	1300	0					971.40								
	1310	10		0.04	0.69	6	976.14	85	82	680	325		61	3.1	16.9
	1320	20		0.041	0.71	8	980.63	89	83	679	326		55	2.8	17.2
	1330	30	-10.12	0.039	0.68	11.5	985.04	91	85	680	325		56	3.2	16.8
	1340	40		0.041	0.71	14.0	989.49	92	86	680	323		56	3.2	16.8
	1350	50		0.039	0.68	15.5	993.57	93	87	680	324		55	3.5	16.5
	13	60													
	1415			0.040	0.69	6.0	994.70	96	91	678	323		63	3.2	16.8
	1425	70	-10.12	0.040	0.69	8.0	999.49	98	92	678	324		58	3.2	16.8
	1435	80		0.040	0.69	9.0	1004.00	99	92	680	323		56	3.4	16.6
	1445	90		0.040	0.69	11.0	1008.48	99	93	679	323		56	3.4	16.6
	1455	100		0.041	0.71	13.0	1013.06	100	94	680	323		56	3.2	16.8
	1505	110		0.042	0.72	15.0	1017.63	100	94	679	324		57	3.9	16.4
		120													
												10	min purge		
AVERAGE		100	-10.12	0.0402	0.696		45.40	91.8		679.4				3.25	16.75

Sample Train Pre Test <0.01 ft^3 @ 11 in. Hg
Leak Checks: Post Test <0.02 ft^3 @ 10 in. Hg

Pitot Tube PreTest OK @ 7 in. H_2O
Leak Checks: Post Test OK @ 7 in. H_2O

CONSOLENERGY

NOTE: Purge for 10 minutes at end of sampling.

ONTARIO HYDRO Hg SAMPLING AND SPECIATION FIELD DATA SHEET

TEST ID	AHO - ONE	METER BOX	N-2	CAL. DATA: delta H	1.956
PLANT	PLANT 7	PITOT TUBE DESC	S-50	Y	0.976
LOCATION	UNIT 1 - AIR HEATER OUTLET	PROBE LENGTH [ft]	6	C(p)	0.819
DATE	8-17-01	NOZZLE ID [inch]	0.180	FILTER BOX SETTING	NA
OPERATOR(S)	DO JL	%H_2O (Assumed)	7.5	PROBE HTR SETTING	325
AMBIENT TEMP [°F]	78	FILTER ID	17	DUCT X-SECTION	circ ? rect ? other:
BAR. PRESS. [" Hg]	29.51	K FACTOR	0.714	DUCT DIMENSIONS	DUCT AREA

Comments: Single Point, ~~Two~~ Three Ports
2" ports measure velocity prior to sampling each port used reading for entire port

1315 406.300

TRAVERSE POINT [port-inch]	CLOCK TIME (24-hr)	SAMPLE TIME [minute]	STATIC PRES [" H_2O]	PITOT HEAD [" H_2O]	METER DIFF PRESSURE [" H_2O]	METER VACUUM [" Hg]	METER READING [ft^3]	METER TEMP [oF] inlet	METER TEMP [oF] outlet	STACK TEMP [°F]	PROBE TEMP [°F]	FILTER BOX [°F]	LAST IMP TEMP [°F]	METER EXHAUST O_2 [% vol]	METER EXHAUST CO_2 [% vol]
	~~1300~~	0													
C-1	~~1320~~ 1330	10	-18.5	0.85	0.60	4.0	410.53	77	77	289	318	NA	69		
	1335	20		0.85	0.60	4.5	414.77	82	79	292	320		58	3.7	16.3
	1345	30		0.85	0.60	5.0	419.03	83	79	320	323		58	3.8	16.2
	1355	40		0.85	0.60	5.5	423.32	84	80	291	324		59	3.7	16.3
	1356														
	1406	50	-18.2	0.21	0.15	3.0	425.57	85	82	319	322		66		
	1416	60		0.21	0.15	3.0	427.645	85	82	323	324		67	~~5.7~~	~~14.6~~
	1426	70		0.21	0.15	3.0	429.850	85	82	319	323		68	flow too	low for
	1436	80		0.21	0.15	3.0	432.265	85	83	~~324~~ 317	324		67	good O_2	reading
														not stable	
	1446	90	-18.7	0.73	0.51	4.5	434.05	86	84	392	327		58	~~4.6~~	~~15.9~~
	1456	100				5.0	440.0 -	87	84	316	326		56	3.5	16.5
	1506	110				5.0	443.93	88	84	365	319		56	3.6	16.4
		120				6.0	447.965	88	84	347	324		56	3.4	16.7
				RMS											
AVERAGE			-18.48	0.555	0.42		411.665	83.1		320				3.6	16.3

Sample Train Pre Test 0.000 ft^3 @ 10 in. Hg
Leak Checks: Post Test 0.000 ft^3 @ 7 in. Hg

Pitot Tube PreTest OK @ 12 in. H_2O
Leak Checks: Post Test _____ @ _____ in. H_2O

CONSOLENERGY

NOTE: Purge for 10 minutes at end of sampling.

ONTARIO HYDRO Hg SAMPLING AND SPECIATION FIELD DATA SHEET

TEST ID	FGDI-ONE	METER BOX	N-4	CAL. DATA: delta H	1.932	Comments:	Three Points in ~~two~~ ONE ports per two ducts
PLANT	PLANT	PITOT TUBE DESC	E-6	Y	0.966		PORT E ONLY - Both DUCTS
LOCATION	UNIT 1 - FGD INLET	PROBE LENGTH [ft]	10	C(p)	0.835		
DATE	8/17/04	NOZZLE ID [inch]	1/4" E 0.248	FILTER BOX SETTING	NA		
OPERATOR(S)	GLC/SAK	%H_2O (Assumed)	7.5	PROBE HTR SETTING	325		
AMBIENT TEMP [°F]	92	FILTER ID	1	DUCT X-SECTION	circ ? / rect ?	other:	
BAR. PRESS. [" Hg]	29.51	K FACTOR	2.52	DUCT DIMENSIONS		DUCT AREA	

TRAVERSE POINT [port-inch]	CLOCK TIME (24-hr)	SAMPLE TIME [minute]	STATIC PRES [" H_2O]	PITOT HEAD [" H_2O]	METER DIFF PRESSURE [" H_2O]	METER VACUUM [" Hg]	METER READING [ft^3]	METER TEMP [oF] ③ inlet	④ outlet	STACK ① TEMP [°F]	PROBE ② TEMP [°F]	FILTER BOX [°F]	LAST IMP ④ TEMP [°F]	METER EXHAUST O_2 [% vol]	CO_2 [% vol]
	1300	0					642.50								
-21.00		~~10~~ 5		0.97	2.40	9.0	651.32	93	93	314	273		47	—	—
A1 21.0 ~~-63.00~~		20	-20.66	0.97	2.40	9.0	659.93	97	93	315	265		56	—	—
EPA 63 ~~-105.00~~		30		0.84	2.10	8.0	668.02	101	94	300	268		57	—	—
A1 E															
63 ~~-21.00~~		40	-20.68	0.86	2.15	8.5	676.06	102	95	306	290		57	—	—
105 ~~-63.00~~		50		0.66	1.65	8.0	683.10	104	96	302	266		58	—	—
-105.00		60	-20.12	0.66	1.65	9.5	690.15	105	96	302	255		58	—	—
		POST A1 — LEAK CHECK: 0 @ 16" Hg													
	@A2	- LEAK TEST: 0 @ 11" Hg					690.80								
START -	1424														
-21.00		70		0.82	2.05	-11.0	698.75	104	100	348	266		52	—	—
21.0 ~~-63.00~~		80	-20.22	0.82	2.05	11.5	706.72	107	101	349	252		58	—	—
63.0 ~~-105.00~~		90		0.74	1.85	11.0	714.23	108	101	352	271		57	—	—
A2 DUCT															
E-PORT															
63.0 ~~-21.00~~		100	-20.95	0.74	1.85	11.5	721.75	108	101	352	272		58	—	—
105 ~~-63.00~~		110		0.66	1.65	11.5	728.98	109	102	346	242		57	—	—
-105.00		120		0.66	1.65	12.0	736.12	110	103	346	240		58	—	—
AVERAGE			-20.53	0.780	1.954		92.97	101		328					

Sample Train Leak Checks: Pre Test 0 ft^3 @ 10 in. Hg; Post Test ~0 ft^3 @ 12 in. Hg

Pitot Tube Leak Checks: PreTest 0 @ 5 in. H_2O; Post Test 0 @ 5 in. H_2O

0.005/23 SEC

CONSOLENERGY

NOTE: Purge for 10 minutes at end of sampling.

ONTARIO HYDRO Hg SAMPLING AND SPECIATION FIELD DATA SHEET

TEST ID	STK - ONE	METER BOX	N-3	CAL. DATA: delta H	1.916
PLANT	PLANT 7	PITOT TUBE DESC	E-13	Y	1.038
LOCATION	UNIT 1 - STACK	PROBE LENGTH [ft]	6	C(p)	0.844
DATE	8-17-04	NOZZLE ID [inch]	3/16 0.188 188	FILTER BOX SETTING	250
OPERATOR(S)	D.C., B.S.	%H_2O (Assumed)	15	PROBE HTR SETTING	250
AMBIENT TEMP [°F]	~80°	FILTER ID	#1	DUCT X-SECTION	circ ? rect ? other:
BAR. PRESS. [" Hg]	29.51	K FACTOR	1.03	DUCT DIMENSIONS / DUCT AREA	

Comments: Four ports, thre points each, 10 minute readings

TRAVERSE POINT [port-inch]	CLOCK TIME (24-hr)	SAMPLE TIME [minute]	STATIC PRES [" H_2O]	PITOT HEAD [" H_2O]	METER DIFF PRESSURE [" H_2O]	METER VACUUM [" Hg]	METER READING [ft^3]	METER TEMP (6) [oF] (7) inlet	METER TEMP (6) [oF] (7) outlet	(1) STACK TEMP [°F]	(2) PROBE TEMP [°F]	(3) FILTER BOX [°F]	(4) LAST IMP TEMP [°F]	METER EXHAUST O_2 [% vol]	METER EXHAUST CO_2 [% vol]
	1300	0					697.90								
-9.60	1310	10		2.20	2.28	6.0	705.72	94	89	136	256	254	60	4.4	15.6
-31.80	1320	20	-2.709	2.40	2.50	6.5	713.92	101	90	136	251	257	63	4.6	15.5
(A) -64.50	1330	30		2.40	2.50	6.5	722.13	105	93	136	221	256	58	4.4	15.6
	1340						722.30								
-9.60	1350	40		1.50	1.55	4.5	728.84	104	96	136	255	257	57	4.5	15.6
-31.80	1400	50	-1.366	2.10	2.18	5.5	736.56	108	98	136	258	257	57	4.5	15.5
(B) -64.50	1410	60		2.70	2.80	7.0	745.29	111	99	136	243	257	57	4.5	15.6
	1420				1.86		745.50								
-9.60	1430	70		1.80	~~1.88~~	5.5	752.71	108	101	136	255	257	57	4.8	15.3
-31.80	1440	80	-2.079	2.70	2.80	7.5	761.47	113	102	136	257	255	54	4.5	15.5
(C) -64.50	1450	90		2.80	2.90	8.0	770.40	115	104	137	239	256	56	4.7	15.4
	1457						770.60								
-9.60	1507	100		2.20	2.28	6.5	778.56	112	104	136	256	258	52	4.6	15.5
-31.80	1517	110	-1.937	2.70	2.80	7.5	787.33	115	105	136	255	255	51	4.6	15.5
(D) -64.50	1527	120		2.70	2.80	8.0	796.10	117	105	136	234	255	53	4.4	15.6
				RMS											
AVERAGE			-2.03	2.332	2.44		97.62	104		136.1				4.5	15.5

Sample Train Leak Checks: Pre Test OK ft^3 @ 10 in. Hg; Post Test OK ft^3 @ 10 in. Hg

Pitot Tube Leak Checks: PreTest OK @ 7 in. H_2O; Post Test OK @ 7 in. H_2O

CONSOL ENERGY

NOTE: Purge for 10 minutes at end of sampling.

ONTARIO HYDRO Hg SAMPLING AND SPECIATION FIELD DATA SHEET

TEST ID	SCRI - TWO	METER BOX	N-5	CAL. DATA: delta H	2.009
PLANT	PLANT 7	PITOT TUBE DESC	E-5	Y	1.006
LOCATION	UNIT 1 - SCR INLET	PROBE LENGTH [ft]	6	20° offset C(p)	0.832
DATE	8/18/04	NOZZLE ID [inch]	5/16A 0.312	FILTER BOX SETTING	~~325~~ NA
OPERATOR(S)	JAW	%H_2O (Assumed)	7.5	PROBE HTR SETTING	325
AMBIENT TEMP [°F]	90	FILTER ID	2	DUCT X-SECTION	circ ? rect ? other:
BAR. PRESS. [" Hg]	29.37	K FACTOR	4.8	DUCT DIMENSIONS / DUCT AREA	

Comments: Single Point, One Port
Probe is rotated 39° ~~[illegible]~~ counterclockwise to align w/ the gas flow

TRAVERSE POINT [port-inch]	CLOCK TIME (24-hr)	SAMPLE TIME [minute]	STATIC PRES [" H_2O]	PITOT HEAD [" H_2O]	METER DIFF PRESSURE [" H_2O]	METER VACUUM [" Hg]	METER READING [ft^3]	METER TEMP [oF] inlet	METER TEMP [oF] outlet	STACK TEMP [°F]	PROBE TEMP [°F]	FILTER BOX [°F]	LAST IMP TEMP [°F]	METER EXHAUST O_2 [% vol]	METER EXHAUST CO_2 [% vol]	
	10:30	0					788.40									O_2 meter calib. clock
C-40"	10:40	10		0.10	0.48	2.5	792.17	93	94	667	274	NA	59	3.1	16.9	
	10:50	20		0.10	0.48	3.0	795.88	95	96	668	292	NA	57	3.4	16.6	
	11:00	30		0.11	0.53	4.5	799.72	97	98	664	300	NA	57	2.9	17.1	20.7 Recal
	11:10	40		0.10	0.48	5.0	803.43	98	98	663	297	NA	58	3.2	16.8	
	11:20	50	-3.36	0.10	0.48	5.5	807.14	99	100	664	297	NA	57	3.4	16.6	
	11:30	60		0.10	0.48	6.5	810.83	99	99	664	298	NA	57	3.1	16.9	20.8 OK
	11:40	70		0.10	0.48	7.5	814.55	100	99	664	297	NA	57	2.7	17.3	
	11:50	80		0.10	0.48	8.5	818.27	101	99	665	297	NA	57	3.4	16.6	
	12:00	90		0.09	0.43	9.5	821.87	101	99	665	297	NA	58	3.2	16.8	20.7 Recal
	12:10	100	-3.54	0.10	0.48	11.0	825.54	101	98	665	295	NA	57	3.7	16.3	
	12:20	110		0.10	0.48	12.5	829.28	101	99	665	297	NA	57	3.1	16.9	
	12:30	120		0.09	0.43	13.5	832.89	101	99	663	296	NA	58	2.9	17.1	
				AMS												
AVERAGE			-3.45	0.0991	0.476		44.49		98.5	664.8				3.18	16.82	

Sample Train Leak Checks: Pre Test dead step ft^3 @ -12.5 in. Hg; Post Test dead step ft^3 @ -15 in. Hg

Pitot Tube Leak Checks: PreTest OK @ -8 in. H_2O; Post Test ____ @ ____ in. H_2O

CONSOLENERGY

Post-test air purge for 10 min @ ΔH = 0.50

NOTE: Purge for 10 minutes at end of sampling.

#2

ONTARIO HYDRO Hg SAMPLING AND SPECIATION FIELD DATA SHEET

Page _____ of _____

TEST ID	SCRO -	METER BOX	1	CAL. DATA: delta H	1.981
PLANT	PLANT 7	PITOT TUBE DESC	EXA	Y	0.984
LOCATION	UNIT 1 - SCR OUTLET	PROBE LENGTH [ft]	8	C(p)	0.838
DATE	8/18/04	NOZZLE ID [inch]	7/16 0.436	FILTER BOX SETTING	NA
OPERATOR(S)	LWR, Kro	%H_2O (Assumed)	7.5	PROBE HTR SETTING	325
AMBIENT TEMP [°F]		FILTER ID	11, 12	DUCT X-SECTION	circ ? rect ? other:
BAR. PRESS. [" Hg]	29.37	K FACTOR	17.21	DUCT DIMENSIONS	DUCT AREA

Comments: ~~Single Point~~, Two Ports
EON water bath 80°C
EON Probe ~~250°C~~ 250°C
EON No data log

TRAVERSE POINT [port-inch]	CLOCK TIME (24-hr)	SAMPLE TIME [minute]	STATIC PRES [" H_2O]	PITOT HEAD [" H_2O] (ΔP)	METER DIFF PRESSURE [" H_2O] (ΔH)	METER VACUUM [" Hg]	METER READING [ft^3]	METER TEMP [oF] inlet (6)	METER TEMP [oF] outlet (7)	STACK TEMP [°F] (1)	PROBE TEMP [°F] (2)	FILTER BOX [°F]	LAST IMP TEMP [°F] (3)	METER EXHAUST O_2 [% vol]	METER EXHAUST CO_2 [% vol]
	1030	0					21.80								
Filter #11	10:40	10		0.042	0.72	5	26.48	85	81	678	325		51	2.8	
	10:50	20		0.038	0.68	6	30.98	89	83	680	324		50	2.8	
	11:00	30	-10.01	0.040	0.70	8	35.45	90	84	679	325		54	2.9	
	11:10	40		0.040	0.70	9.5	39.98	93	86	681	324		55	2.9	
	11:20	50		0.041	0.71	12.0	44.51	93	87	680	324		56	3.0	
	11:30	60		0.040	0.70	14.0	49.02	94	88	681	324		56	2.8	
	1150			~~0.40~~	~~0.70~~		49.50								
Filter #12	1200	70		0.040	0.70	4.5	54.11	95	91	682	323		55	3.0	
	1210	80	-10.50	0.041	0.71	7.0	58.70	97	91	684	325		51	3.5	
	1220	90		0.042	0.72	9.0	63.27	98	92	684	324		52	2.9	
	1230	100		0.041	0.71	10.5	67.87	98	93	684	322		53	2.3	
	1240	110		0.040	0.70	13.0	72.46	98	93	684	323		54	3.0	
	12:50	120		0.041	0.71	15.5	77.03	99	94	684	323		57	2.9	
AVERAGE		120	-10.25	0.0402 (avg)	0.705		54.75	97.3		681.4				2.90	

Sample Train Leak Checks: Pre Test <0.01 ft^3 @ 11 in. Hg; Post Test <0.01 ft^3 @ 10 in. Hg

Pitot Tube Leak Checks: PreTest OK @ 7 in. H_2O; Post Test OK @ 6 in. H_2O

CONSOLENERGY

NOTE: Purge for 10 minutes at end of sampling.

ONTARIO HYDRO Hg SAMPLING AND SPECIATION FIELD DATA SHEET

TEST ID	AHO - TWO	METER BOX	N-2	CAL. DATA: delta H	1.956
PLANT	PLANT 7	PITOT TUBE DESC		Y	0.976
LOCATION	UNIT 1 - AIR HEATER OUTLET	PROBE LENGTH [ft]	6	C(p)	
DATE	8-18-04	NOZZLE ID [inch]	0.180	FILTER BOX SETTING	NA
OPERATOR(S)	DO JL	%H_2O (Assumed)	7.5	PROBE HTR SETTING	325
AMBIENT TEMP [°F]		FILTER ID	18	DUCT X-SECTION	circ ? / rect ? / other:
BAR. PRESS. [" Hg]		K FACTOR		DUCT DIMENSIONS	DUCT AREA

Comments: Single Point, Two Ports

TRAVERSE POINT [port-inch]	CLOCK TIME (24-hr)	SAMPLE TIME [minute]	STATIC PRES [" H_2O]	PITOT HEAD [" H_2O]	METER DIFF PRESSURE [" H_2O]	METER VACUUM [" Hg]	METER READING [ft^3]	METER TEMP [oF] inlet	METER TEMP [oF] outlet	STACK TEMP [°F]	PROBE TEMP [°F]	FILTER BOX [°F]	LAST IMP TEMP [°F]	METER EXHAUST O_2 [% vol]	METER EXHAUST CO_2 [% vol]
	10:30	0					453.550								
M	10:40	10	-18.8	0.76	0.54	4.0	457.65	74	74	363	318	NA	68		
	10:50	20		0.76	0.54	5.0	461.70	76	74	342	325		59	4.4	15.7
	11:00	30		0.76	0.54	5.5	465.73	79	76	362	319		57	3.6	16.6
	11:10	40		0.76	0.54	6.0	469.59	80	77	343	318		59	3.4	16.6
E	11:20	50	-18.42	0.42	0.30	5.5	472.64	82	78	322	318		60	4.4	15.7
	11:30	60		0.42	0.30	5.5	475.666	82	78	309	311		59	4.2	15.9
	11:40	70		0.42	0.30	6.0	478.644	83	80	325	313		59	4.3	15.8
	11:50	80		0.42	0.30	6.0	481.72	84	80	327	313		60	4.3	15.8
									81						
C	12:00	90	-18.92	0.91	0.64	9.5	486.02	85	81	293	322		60	4.3	15.8
	12:10	100		0.91	0.64	10.0	490.55	86	82	294	325		56	4.0	16.0
	12:11	101		0.91	0.64	11.0	491.024	87	83	296	325		57	4.3	15.8
		120													
				RMS											
AVERAGE			-18.21	0.680	0.48		37.474	80	80.0	328.7				4.1	16.0

Sample Train Pre Test 0.000 ft^3 @ 10 in. Hg
Leak Checks: Post Test 0.000 ft^3 @ 11 in. Hg

Pitot Tube PreTest OK @ 8 in. H_2O
Leak Checks: Post Test OK @ 7 in. H_2O

CONSOLENERGY

NOTE: Purge for 10 minutes at end of sampling.

ONTARIO HYDRO Hg SAMPLING AND SPECIATION FIELD DATA SHEET

Page ____ of ____

TEST ID	FGDI - 2	METER BOX	N-4	CAL. DATA: delta H	1.932
PLANT	PLANT 7	PITOT TUBE DESC	E-6	Y	0.966
LOCATION	UNIT 1 - FGD INLET	PROBE LENGTH [ft]	10	C(p)	0.835
DATE	8/18/04	NOZZLE ID [inch]	1/4"E, 0.248"	FILTER BOX SETTING	NA
OPERATOR(S)	GLC/SAK	%H_2O (Assumed)		PROBE HTR SETTING	325
AMBIENT TEMP [°F]	75	FILTER ID	2	DUCT X-SECTION	circ ? / rect ? / other:
BAR. PRESS. [" Hg]	29.37	K FACTOR	2.52	DUCT DIMENSIONS / DUCT AREA	

Comments: Three Points in ~~2~~ ONE ports per two ducts
* PROBE TC SUSPECTED to BE FLAWED -- READING LOW

TRAVERSE POINT [port-inch]	CLOCK TIME (24-hr)	SAMPLE TIME [minute]	STATIC PRES [" H_2O]	PITOT HEAD [" H_2O]	METER DIFF PRESSURE [" H_2O]	METER VACUUM [" Hg]	METER READING [ft^3]	METER TEMP [oF] (6) inlet	(7) outlet	STACK TEMP (1) [°F]	PROBE (2) TEMP [°F] *	FILTER BOX [°F]	LAST IMP (4) TEMP [°F]	METER EXHAUST O_2 [% vol]	CO_2 [% vol]
	1030	0					744.10								
-21.00		10		0.78	1.95	7.0	751.70	86	84	344	242		51	4.3	
21 ~~-63.00~~		20	-20.03	0.84	2.10	7.5	759.39	90	85	346	202		59	4.5	
63 ~~-105.00~~		30		0.72	1.80	7.5	766.86	92	86	349	193		62	4.4	
A2				~~0.70~~	~~1.75~~	~~7.5~~		~~94~~	~~87~~	~~350~~	~~196~~		~~58~~	~~4.5~~	
PORT E															
63 ~~-21.00~~		40	-20.22	0.70	1.75	7.5	774.17	94	87	350	196		58	4.5	
105 ~~-63.00~~		50		0.64	1.60	7.5	781.10	95	88	345	192		57	4.7	
-105.00		60		0.64	1.60	7.5	787.90	96	89	344	200		56	4.6	
			POST A2	LEAK - 0 @ -11" Hg											
	RESTART 1148		PRE A1	LEAK - 0 @ 10" Hg											
-21.00		70		0.94	2.35	11.0	~~788.59~~ 797.07	95	89	310	187		53	4.5	
21 ~~-63.00~~		80		0.96	2.40	12.0	805.60	95	90	311	196		57	4.5	
63 ~~-105.00~~		90	-20.29	0.84	2.10	11.0	813.60	96	90	310	204		60	4.5	
A1				~~0.80~~	~~2.00~~	~~11.0~~									
PORT E														4.1	
63 ~~-21.00~~		100		0.80	2.00	11.0	821.47	97	90	310	217		60	~~5.3~~	
105 ~~-63.00~~		110		0.64	1.60	12.0	828.39	98	91	306	214		59	4.8	
-105.00	1248	120		0.64	1.60	14.0	835.29	99	92	307	215		60	4.6	
				RUN											
AVERAGE			-20.18	0.759	1.904		90.65	91.4		327.7				4.5	

Sample Train Pre Test 0 ft^3 @ 10 in. Hg
Leak Checks: Post Test 0 ft^3 @ 12 in. Hg

Pitot Tube PreTest 0 @ 5 in. H_2O
Leak Checks: Post Test 0 @ 5 in. H_2O

CONSOLENERGY

NOTE: Purge for 10 minutes at end of sampling.

ONTARIO HYDRO Hg SAMPLING AND SPECIATION FIELD DATA SHEET

TEST ID	STK - 2	METER BOX	N - 3	CAL. DATA: delta H	1.916	Comments:	Four ports, thre points each, 10 minute readings
PLANT	PLANT 7	PITOT TUBE DESC	E - 13	Y	1.038		
LOCATION	UNIT 1 - STACK	PROBE LENGTH [ft]	6	C(p)	0.844		
DATE	8-18-04	NOZZLE ID [inch]	3/16 B 0.188	FILTER BOX SETTING	250 325		
OPERATOR(S)	D.C., B.S.	%H_2O (Assumed)		PROBE HTR SETTING	250 325		
AMBIENT TEMP [°F]	80	FILTER ID	#2	DUCT X-SECTION	circ ? rect ?	other:	
BAR. PRESS. [" Hg]	29.37	K FACTOR	1.03	DUCT DIMENSIONS		DUCT AREA	

TRAVERSE POINT [port-inch]	CLOCK TIME (24-hr)	SAMPLE TIME [minute]	STATIC PRES [" H_2O]	PITOT HEAD [" H_2O]	METER DIFF PRESSURE [" H_2O]	METER VACUUM [" Hg]	METER READING [ft^3]	METER TEMP [oF] (6) inlet	METER TEMP [oF] (7) outlet	STACK TEMP [°F] (1)	PROBE TEMP [°F] (2)	FILTER BOX [°F] (3)	LAST IMP TEMP [°F] (4)	METER EXHAUST O_2 [% vol]	METER EXHAUST CO_2 [% vol]
	1030	0					802.10								
-9.60	1040	10		2.20	2.27	4.5	809.96	89	84	133	269	298	60	4.5	15.6
(A) -31.80	1050	20	-1.265	2.40	2.47	5.0	818.15	97	87	134	265	304	63	4.5	15.7
-64.50	1100	30		2.30	2.37	5.0	826.21	102	91	136	229	304	62	4.3	15.7
	1110						826.30								
-9.60	1120	40		1.40	1.44	3.5	832.54	102	93	136	251	317	58	4.5	15.5
(B) -31.80	1130	50	-2.293	2.20	2.27	5.0	840.37	107	96	136	260	318	55	4.2	15.7
-64.50	1140	60		2.80	2.88	6.0	849.27	111	98	138	220	320	57	4.4	15.6
	1147						849.40								
-9.60	1157	70		1.80	1.85	4.5	856.56	109	100	138	241	319	59	4.6	15.5
(C) -31.80	1207	80	-1.818	2.40	2.47	5.5	864.82	112	101	138	243	324	54	4.5	15.5
-64.50	1217	90		2.70	2.78	6.0	873.58	115	103	137	216	323	56	4.5	15.5
	1224						873.70								
-9.60	1234	100		2.10	2.16	5.0	881.47	112	104	137	243	325	57	4.2	15.8
(D) -31.80	1244	110	-2.834	2.50	2.58	6.0	889.97	115	104	138	237	323	58	4.5	15.7
-64.50	1254	120		2.80	2.88	6.5	898.96	117	105	137	200	323	59	4.4	15.5
				2ms											
AVERAGE			-2.05	2.282	2.368		96.52	102.3		136.5				4.4	15.6

Sample Train Leak Checks: Pre Test OK ft^3 @ 10 in. Hg; Post Test OK ft^3 @ 10 in. Hg

Pitot Tube Leak Checks: PreTest OK @ 7 in. H_2O; Post Test OK @ 7 in. H_2O

CONSOL ENERGY

NOTE: Purge for 10 minutes at end of sampling.

ONTARIO HYDRO Hg SAMPLING AND SPECIATION FIELD DATA SHEET

TEST ID	SCRI - TRACE	METER BOX	N-5	CAL. DATA: delta H	2.009
PLANT	PLANT 7	PITOT TUBE DESC	E-5	Y	1.006
LOCATION	UNIT 1 - SCR INLET	PROBE LENGTH [ft]	6	C(p)	0.832
DATE	8/18/04	NOZZLE ID [inch]	5/16 A 0.312	FILTER BOX SETTING	325
OPERATOR(S)	JAW	%H_2O (Assumed)	9.6	PROBE HTR SETTING	325
AMBIENT TEMP [°F]	105	FILTER ID	3	DUCT X-SECTION	circ ? rect ? other:
BAR. PRESS. [" Hg]	29.37	K FACTOR	4.7	DUCT DIMENSIONS / DUCT AREA	

Comments: Single Point, One Port
Probe is rotated 39° counterclockwise to align w/ the gas flow

TRAVERSE POINT [port-inch]	CLOCK TIME (24-hr)	SAMPLE TIME [minute]	STATIC PRES [" H_2O]	PITOT HEAD [" H_2O]	METER DIFF PRESSURE [" H_2O]	METER VACUUM [" Hg]	METER READING [ft^3]	METER TEMP [oF] inlet	METER TEMP [oF] outlet	STACK TEMP [°F]	PROBE TEMP [°F]	FILTER BOX [°F]	LAST IMP TEMP [°F]	METER EXHAUST O_2 [% vol]	METER EXHAUST CO_2 [% vol]	O_2 meter cal's check
	15:30	0					838.10									
C 40"	15:40	10		0.10	0.47	2.0	841.89	105	106	661	309	NA	48	3.5	16.5	
	15:50	20		0.09	0.42	2.5	845.46	107	107	661	327	NA	47	2.9	17.1	
	16:00	30	-3.65	0.10	0.47	3.5	849.15	108	108	660	326	NA	47	3.3	16.7	20.9 OK
	16:10	40		0.09	0.42	4.0	852.71	109	108	664	325	NA	48	3.2	16.8	
	16:20	50		0.09	0.42	4.5	856.26	110	108	663	331	NA	49	3.2	16.8	
	16:30	60		0.09	0.42	5.0	859.79	110	109	661	328	NA	49	3.3	16.7	
	16:40	70		0.09	0.42	5.5	863.31	111	109	660	330	NA	50	3.2	16.8	21.0 OK
	16:50	80	-3.35	0.09	0.42	6.5	866.85	111	110	660	331	NA	51	3.2	16.8	
	17:00	90		0.09	0.42	7.5	870.35	111	108	662	329	NA	52	3.2	16.8	
	17:10	100		0.09	0.42	8.5	873.89	111	108	661	328	NA	52	3.5	16.5	21.0 OK
	17:20	110		0.09	0.42	9.5	877.41	111	108	661	327	NA	52	3.0	17.0	
	17:30	120		0.10	0.47	12.0	881.11	111	107	663	331	NA	53	3.2	16.8	
AVERAGE			-3.50	0.0925	0.433		43.01		108.8	661.4				3.23	16.78	

Sample Train Leak Checks: Pre Test dead 5 ft^3 @ -13 in. Hg; Post Test dead 5 ft^3 @ -15 in. Hg

Pitot Tube Leak Checks: PreTest OK @ 7" in. H_2O; Post Test ____ @ ____ in. H_2O

CONSOLENERGY

NOTE: Purge for 10 minutes at end of sampling.

Post-test air purge for 10 min @ ΔH = 0.6

(3) 0 0 0 0 0 0 (PORTS)
1 2 3 4 5 6

ONTARIO HYDRO Hg SAMPLING AND SPECIATION FIELD DATA SHEET

Page _____ of _____

TEST ID	SCRO -	METER BOX	1	CAL. DATA: delta H	1.981	Comments: ~~Single~~ Point, Two Ports	
PLANT	PLANT 7	PITOT TUBE DESC	E-15A	Y	0.984	(EON) 1st condenser - dowex	
LOCATION	UNIT 1 - SCR OUTLET	PROBE LENGTH [ft]	8	C(p)	0.838	2nd condenser - activated	
DATE	8/18/04	NOZZLE ID [inch]	7/16 0.436	FILTER BOX SETTING	NA	charcoal	
OPERATOR(S)	LWK, RIO	%H_2O (Assumed)		PROBE HTR SETTING	325		
AMBIENT TEMP [°F]		FILTER ID	13, 14	DUCT X-SECTION	circ ? / (rect ?)	other:	
BAR. PRESS. [" Hg]	29.37	K FACTOR	~~17.21~~ 16.7	DUCT DIMENSIONS		DUCT AREA	

TRAVERSE POINT [port-inch]	CLOCK TIME (24-hr)	SAMPLE TIME [minute]	STATIC PRES [" H_2O]	PITOT HEAD [" H_2O] (ΔP)	METER DIFF PRESSURE [" H_2O] (ΔH)	METER VACUUM [" Hg]	METER READING [ft^3]	METER TEMP [oF] inlet (6)	METER TEMP [oF] outlet (7)	STACK TEMP [°F] (1)	PROBE TEMP [°F] (2)	FILTER BOX [°F]	LAST IMP TEMP [°F] (3)	METER EXHAUST O_2 [% vol]	METER EXHAUST CO_2 [% vol]
	1530	0					81.70								
port 1 #13	1540	10		0.044	0.73	7.5	86.36	95	93	682	323		68	3.1	
	1550	20		0.042	0.70	10.0	90.90	98	94	683	323		62	3.3	
(X)	1600	30		0.043	~~0.72~~	11.5	95.51	101	95	683	325		62	3.3	
port 5	1610	40	-10.26	0.041	0.67	14.0	99.99	102	96	683	324		62	3.3	
	1620	50		0.043	0.72	16.0	104.39	103	97	683	323		63	3.3	
	~~1630~~ 1640	60	-10.17	0.040	0.66	8	~~104.80~~ 109.43	104	100	679	324		67	2.9	
port 1 #14															
#X	1650	70	-	0.042	0.70	9.5	114.05	106	100	681	324		63	3.0	
(port 2)	1700	80		0.040	0.66	11	118.53	107	101	682	324		63	3.2	
	1710	90		0.041	0.67	14	123.04	107	102	682	324		63	3.2	
	1720	100		0.040	0.66	16.0	127.51	107	102	681	323		64	2.7	
		110													
		120													
				Test 1 port 5 port 2		Test 2 port 2 port 4		Test 3 port 5 port 2							
AVERAGE		109	-10.22	0.042	0.69		45.40	100.5		681.9				3.12	

10 min purge just

Sample Train Leak Checks: Pre Test <0.01 ft^3 @ 11 in. Hg; Post Test <0.01 ft^3 @ 11 in. Hg

Pitot Tube Leak Checks: PreTest OK @ 7 in. H; Post Test OK @ 9

CONSOLENERGY

NOTE:

ONTARIO HYDRO Hg SAMPLING AND SPECIATION FIELD DATA SHEET

TEST ID	AHO - THREE	METER BOX	N-2	CAL. DATA: delta H	1.956	Comments: Single Point, Two Ports	
PLANT	PLANT 7	PITOT TUBE DESC	S-53	Y	0.976		
LOCATION	UNIT 1 - AIR HEATER OUTLET	PROBE LENGTH [ft]	6	C(p)			
DATE	8-18-04	NOZZLE ID [inch]	0.180	FILTER BOX SETTING	NA		
OPERATOR(S)	DO JL	%H_2O (Assumed)	9	PROBE HTR SETTING	325		
AMBIENT TEMP [°F]		FILTER ID	19	DUCT X-SECTION	circ ? / rect ?	other:	
BAR. PRESS. [" Hg]	29.37	K FACTOR	0.68	DUCT DIMENSIONS		DUCT AREA	

TRAVERSE POINT [port-inch]	CLOCK TIME (24-hr)	SAMPLE TIME [minute]	STATIC PRES [" H_2O]	PITOT HEAD [" H_2O]	METER DIFF PRESSURE [" H_2O]	METER VACUUM [" Hg]	METER READING [ft^3]	METER TEMP [oF] inlet	METER TEMP [oF] outlet	STACK TEMP [°F]	PROBE TEMP [°F]	FILTER BOX [°F]	LAST IMP TEMP [°F]	METER EXHAUST O_2 [% vol]	METER EXHAUST CO_2 [% vol]
	1530	0					497.200								
C	1540	10	-17.7	0.86	0.59	4.0	501.47	84	87	317	324		68	4.0	15.9
	1550	20		0.84	0.59	4.5	505.75	86	85	299	325		65	4.0	15.9
	1600	30		0.84	0.59	5.0	510.02	89	86	298	326		59	4.0	15.9
	1610	40		0.84	0.59	5.5	514.165	91	87	299	325		61	3.9	16.1
F	1620	50	-19.1	0.43	0.29	5.0	517.263	93	89	335	326		64	4.1	16.0
	1630	60		0.43	0.29	5.0	520.320	93	89	336	~~324~~ 325		66	4.3	15.8
	1640	70		0.43	0.29	5.5	523.27	94	90	335	325		64	4.1	16.1
	1650	80		0.43	0.29	6.0	526.35	94	91	337	322		65	4.1	16.0
M		90	-19.2	0.78	0.53	6.0	530.380	94	91	340	326		69	3.4	16.7
		100		0.78	0.53	8.5	534.35	95	91	368	326		63	3.3	16.7
		110		0.78	0.53	9.5	538.35	95	92	370	326		63	3.0	16.8
		120		0.78	0.53	11.5	542.425	95	93	370	319		64	3.1	17.0
				RWS											
AVERAGE			-18.7	0.676	0.47		45.225	90.6		333.3				3.8	16.2

Sample Train Leak Checks: Pre Test 0.000 ft^3 @ 10 in. Hg; Post Test 0.000 ft^3 @ 12 in. Hg

Pitot Tube Leak Checks: PreTest OK @ 7 in. H_2O; Post Test OK @ 7 in. H_2O

CONSOLENERGY

NOTE: Purge for 10 minutes at end of sampling.

ONTARIO HYDRO Hg SAMPLING AND SPECIATION FIELD DATA SHEET

Page _____ of _____

TEST ID	FGDI - 3	METER BOX	N-4	CAL. DATA: delta H	1.932
PLANT	PLANT 7	PITOT TUBE DESC	E-6	Y	0.966
LOCATION	UNIT 1 - FGD INLET	PROBE LENGTH [ft]	10	C(p)	0.835
DATE	8/18/04	NOZZLE ID [inch]	1/4"E - 0.248	FILTER BOX SETTING	NA
OPERATOR(S)	GLC/SAK	%H_2O (Assumed)		PROBE HTR SETTING	325
AMBIENT TEMP [°F]	92	FILTER ID	3	DUCT X-SECTION	circ ? rect ? other:
BAR. PRESS. [" Hg]	29.37	K FACTOR	2.52	DUCT DIMENSIONS	DUCT AREA

Comments: Three Points in ~~two~~ one ports per two ducts

TRAVERSE POINT [port-inch]	CLOCK TIME (24-hr)	SAMPLE TIME [minute]	STATIC PRES [" H_2O]	PITOT HEAD [" H_2O]	METER DIFF PRESSURE [" H_2O]	METER VACUUM [" Hg]	METER READING [ft^3]	METER TEMP [oF] (6) Inlet	METER TEMP [oF] (7) outlet	STACK TEMP (1) [°F]	PROBE TEMP (2) [°F]	FILTER BOX [°F]	LAST IMP TEMP (4) [°F]	METER EXHAUST O_2 [% vol]	METER EXHAUST CO_2 [% vol]
	1530	0					842.90								
-21.00		10		0.96	2.40	8.5	851.51	100	96	322	221		57	4.2	
21 ~~-63.00~~		20		0.96	2.40	9.0	860.12	102	97	322	230		63	4.5	
63 ~~-105.00~~		30		0.84	2.10	8.5	868.18	104	98	313	222		54	4.6	
A1															
PORT E															
63 ~~-21.00~~		40	-21.16	0.84	2.10	9.0	876.19	105	98	313	226		54	4.6	
105 ~~-63.00~~		50		0.68	1.70	9.0	883.39	105	99	310	225		56	4.6	
-105.00		60		0.68	1.70	9.5	890.46	105	99	310	227		57	4.5	
		POST A1 LEAK : 0 @ 10" Hg					PRE A2 LEAK : 0 @ 10" Hg								
RESTART:	1645						891.05								
-21.00		70		0.82	2.0	12.0	898.98	103	99	354	235		55	4.6	
21 ~~-63.00~~		80		0.82	2.0	12.5	906.94	105	100	352	235		59	4.4	
63 ~~-105.00~~		90	-20.23	0.72	1.80	12.5	914.45	107	101	357	235		60	4.5	
A2															
PORT E															
63 ~~-21.00~~		100		0.72	1.80	12.5	921.96	108	102	357	247		57	4.4	
105 ~~-63.00~~		110	-20.60	0.66	1.65	12.5	929.16	109	102	352	237		55	4.6	
-105.00		120		0.64	1.60	13.5	936.18	110	103	352	247		55	4.4	
AVERAGE			-20.6	0.775 RHS	1.936		92.69	102.33		334.5				4.49	

Sample Train Pre Test 0 ft^3 @ 10 in. Hg
Leak Checks: Post Test 0 ft^3 @ 13 in. Hg

Pitot Tube PreTest 0 @ 5 in. H_2O
Leak Checks: Post Test 0 @ 5 in. H_2O

CONSOLENERGY.

NOTE: Purge for 10 minutes at end of sampling.

ONTARIO HYDRO Hg SAMPLING AND SPECIATION FIELD DATA SHEET

TEST ID	STK - 3	METER BOX	2 - 3	CAL. DATA: delta H	1.916	Comments:	Four ports, thre points each, 10 minute readings
PLANT	PLANT 7	PITOT TUBE DESC	E - 13	Y	1.038		
LOCATION	UNIT 1 - STACK	PROBE LENGTH [ft]	6	C(p)	0.844		
DATE	8 - 18 - 04	NOZZLE ID [inch]	3/16B 0.188	FILTER BOX SETTING	250	325	
OPERATOR(S)	D.C., B.S.	%H_2O (Assumed)		PROBE HTR SETTING	250	325	
AMBIENT TEMP [°F]	~ 90°	FILTER ID	# 3	DUCT X-SECTION	circ ?	rect ?	other:
BAR. PRESS. [" Hg]	29.37	K FACTOR	1.03	DUCT DIMENSIONS		DUCT AREA	

TRAVERSE POINT [port-inch]	CLOCK TIME (24-hr)	SAMPLE TIME [minute]	STATIC PRES [" H_2O]	PITOT HEAD [" H_2O]	METER DIFF PRESSURE [" H_2O]	METER VACUUM [" Hg]	METER READING [ft^3]	METER TEMP [oF] (6) inlet	METER TEMP [oF] (7) outlet	STACK TEMP [°F] (1)	PROBE TEMP [°F] (2)	FILTER BOX [°F] (3)	LAST IMP TEMP [°F] (4)	METER EXHAUST O_2 [% vol]	METER EXHAUST CO_2 [% vol]
	1530	0					911.60								
-9.60	START	10		2.10	2.16	5	919.24	111	104	136	300	328	55	4.3	15.7
-31.80		20	-2.785	2.40	2.47	6	927.42	117	105	136	278	327	62	4.7	15.4
(A) -64.50		30		2.50	2.58	6	935.75	119	107	137	220	321	62	4.6	15.5
			L.C. "OK" RESTART				935.90								
-9.60		40		1.50	1.55	4.5	942.47	116	107	137	250	329	59	4.5	15.5
-31.80		50	-2.690	2.40	2.47	6	950.64	118	109	137	257	328	53	4.3	15.7
(B) -64.50		60		2.80	2.88	7	959.47	121	110	137	229	323	54	4.4	15.6
			L.C. "OK" RESTART				959.60								
-9.60		70		1.80	1.85	5	966.71	117	110	137	250	324	56	4.4	15.6
-31.80		80	-2.809	2.80	2.88	7	975.48	120	111	137	245	320	58	4.3	15.7
(C) -64.50		90		2.80	2.88	7.5	984.33	121	111	138	218	320	62	4.4	15.6
			L.C. "OK" RESTART				984.50								
-9.60		100		2.30	2.37	6.5	992.54	119	111	137	243	320	54	4.6	15.5
-31.80		110	-2.861	2.60	2.68	7	000.93	122	112	138	256	317	55	4.4	15.6
(D) -64.50	1753	120		2.60	2.68	7	009.41	122	112	138	220	320	56	4.5	15.5
	STOP														
AVERAGE		120	-2.786	2.366	2.454		97.36	113.8		137.1				4.45	15.58

Sample Train Leak Checks: Pre Test 0K ft^3 @ 10 in. Hg; Post Test 0K ft^3 @ 10 in. Hg

Pitot Tube Leak Checks: PreTest 0K @ 7 in. H_2O; Post Test 0K @ 7 in. H_2O

CONSOLENERGY

NOTE: Purge for 10 minutes at end of sampling.

ONTARIO HYDRO Hg SAMPLING AND SPECIATION FIELD DATA SHEET

TEST ID	SCRI - FOUR	METER BOX	N-5	CAL. DATA: delta H	2.009
PLANT	PLANT 7	PITOT TUBE DESC	E-5	Y	1.006
LOCATION	UNIT 1 - SCR INLET	PROBE LENGTH [ft]	6	C(p)	0.832
DATE	8/19/04	NOZZLE ID [inch]	5/16A 0.312	FILTER BOX SETTING	325
OPERATOR(S)	JAW	%H_2O (Assumed)	9.5	PROBE HTR SETTING	325
AMBIENT TEMP [°F]	95	FILTER ID	4	DUCT X-SECTION	circ ? rect ? other:
BAR. PRESS. [" Hg]	29.90	K FACTOR	4.7	DUCT DIMENSIONS / DUCT AREA	

Comments: Single Point, One Port
Probe is rotated 39° counterclockwise to align with the gas flow

TRAVERSE POINT [port-inch]	CLOCK TIME (24-hr)	SAMPLE TIME [minute]	STATIC PRES [" H_2O]	PITOT HEAD [" H_2O]	METER DIFF PRESSURE [" H_2O]	METER VACUUM [" Hg]	METER READING [ft^3]	METER TEMP [oF] inlet	METER TEMP [oF] outlet	STACK TEMP [°F]	PROBE TEMP [°F]	FILTER BOX [°F]	LAST IMP TEMP [°F]	METER EXHAUST 3.2 O_2 [% vol]	METER EXHAUST 16.8 CO_2 [% vol]	
	10:40	0					887.60									
C 40"	10:50	10		0.09	0.42	2.0	891.13	101	102	653	261	NA	66	3.5	16.5	
	11:00	20		0.09	0.42	2.5	894.61	102	102	656	280	NA	63	3.4	16.6	20.8 OK
	11:10	30		0.10	0.47	3.5	898.26	104	103	657	285	NA	62	3.2	16.8	
	11:20	40		0.10	0.47	4.0	901.95	105	105	654	287	NA	60	3.7	16.3	20.6 Recal
	11:30	50	-3.55	0.10	0.47	5.0	905.72	105	104	656	289	NA	57	3.0	17.0	
	11:40	60		0.09	0.42	5.5	909.17	106	104	657	290	NA	57	3.3	16.7	
	11:50	70		0.10	0.42	6.5	912.84	106	104	656	290	NA	59	3.3	16.7	20.8 OK
	12:00	80		0.09	0.42	6.5	916.39	105	102	657	291	NA	58	3.6	16.4	
	12:10	90	-3.57	0.09	0.42	7.5	919.85	105	103	657	292	NA	60	3.9	16.1	
	12:20	100		0.09	0.42	8.5	923.32	105	104	656	292	NA	57	3.3	16.7	20.9 OK
	12:30	110		0.10	0.47	10.0	926.98	106	104	657	294	NA	57	3.2	16.8	
	12:40	120		0.10	0.47	11.5	930.66	106	104	657	295	NA	58	3.5	16.5	
				0.0949 Avg												
AVERAGE			-3.56	~~0.0949~~	0.453		43.06		104.0	656.1				3.41	16.59	

Sample Train Leak Checks: Pre Test leak check ft^3 @ -12 in. Hg; Post Test leak check ft^3 @ -12 in. Hg

Pitot Tube Leak Checks: PreTest OK @ 8 in. H_2O; Post Test ____ @ ____ in. H_2O

CONSOLENERGY

Post-test air purge for 10 min @ ΔH = 0.5

NOTE: Purge for 10 minutes at end of sampling.

4

ONTARIO HYDRO Hg SAMPLING AND SPECIATION FIELD DATA SHEET

Page _____ of _____

TEST ID	SCRO -	METER BOX	1	CAL. DATA: delta H	1.981
PLANT	PLANT 7	PITOT TUBE DESC	E-15A	Y	0.984
LOCATION	UNIT 1 - SCR OUTLET	PROBE LENGTH [ft]	8	C(p)	0.838
DATE	8/19/04	NOZZLE ID [inch]	7/16 0.436	FILTER BOX SETTING	NA
OPERATOR(S)	LWK, KLO	%H_2O (Assumed)		PROBE HTR SETTING	325
AMBIENT TEMP [°F]		FILTER ID	15, 16	DUCT X-SECTION	circ ? rect ? other:
BAR. PRESS. [" Hg]	29.40	K FACTOR	16.5	DUCT DIMENSIONS / DUCT AREA	

Comments: Single Point, Two Ports
- 47" long nipple on sampling port
- 8'9" probe

TRAVERSE POINT [port-inch]	CLOCK TIME (24-hr)	SAMPLE TIME [minute]	STATIC PRES [" H_2O]	PITOT HEAD [" H_2O] (ΔP)	METER DIFF PRESSURE [" H_2O] (ΔH)	METER VACUUM [" Hg]	METER READING [ft^3]	METER TEMP [oF] inlet (6)	METER TEMP [oF] outlet (7)	STACK TEMP [°F] (1)	PROBE TEMP [°F] (2)	FILTER BOX [°F]	LAST IMP TEMP [°F] (3)	METER EXHAUST O_2 [% vol]	METER EXHAUST CO_2 [% vol]
	1040	0					132.50								
port 2	1050	10		0.041	0.67	5	136.89	93	90	674	324		54	3.0	
	1100	20		0.043	0.70	7	141.43	96	91	677	324		52	3.1	
#15 filter	1110	30		0.043	0.70	8.5	145.98	99	92	679	324		56	3.5	
	1120	40		0.042	0.68	10	150.48	99	93	678	324		58	3.4	
	1130	50	-10.57	0.043	0.70	12	154.99	101	94	679	324		59	3.2	
	1140	60		0.041	0.67	14	159.48	101	95	678	324		60	3.2	
							intermediate leak cks - OK < 0.01 @ 10" Hg								
	1200						161.40								
	1210	70	-10.58	0.043	0.70	5	166.00	101	97	679	325		53	2.9	
port 5	1220	80		0.040	0.66	7	170.47	103	98	681	324		52	3.4	
#16 filter	1230	90		0.041	0.67	9	174.98	104	99	682	323		53	3.0	
	1240	100		0.042	0.68	11	179.52	104	99	681	323		54	3.1	
	1250	110		0.043	0.70	13	184.10	104	99	682	324		55	3.0	
	1300	120		0.041	0.67	14.5	188.62	104	99	681	319		59	3.2	
AVERAGE		120	-10.50	0.0419	0.683		54.20	98.1		679.3				3.17	

10 min purge @ end of test

Sample Train Leak Checks: Pre Test < 0.01 ft^3 @ 10 in. Hg; Post Test < 0.01 ft^3 @ 11 in. Hg

Pitot Tube Leak Checks: PreTest OK @ 8 in. H_2O; Post Test OK @ 9 in. H_2O

CONSOLENERGY

NOTE: Purge for 1

ONTARIO HYDRO Hg SAMPLING AND SPECIATION FIELD DATA SHEET

TEST ID	AHO - 4	METER BOX	N-2	CAL. DATA: delta H	1.956
PLANT	PLANT 7	PITOT TUBE DESC	S-53	Y	0.976
LOCATION	UNIT 1 - AIR HEATER OUTLET	PROBE LENGTH [ft]	6	C(p)	
DATE	8.19.04	NOZZLE ID [inch]	0.180	FILTER BOX SETTING	NA
OPERATOR(S)	DO JL	%H_2O (Assumed)	9	PROBE HTR SETTING	325
AMBIENT TEMP [°F]		FILTER ID	20	DUCT X-SECTION	circ ? rect ? other:
BAR. PRESS. [" Hg]	29.40	K FACTOR	0.68	DUCT DIMENSIONS	DUCT AREA

Comments: Single Point, Two Ports

TRAVERSE POINT [port-inch]	CLOCK TIME (24-hr)	SAMPLE TIME [minute]	STATIC PRES [" H_2O]	PITOT HEAD [" H_2O]	METER DIFF PRESSURE [" H_2O]	METER VACUUM [" Hg]	METER READING [ft^3]	METER TEMP [oF] inlet	METER TEMP [oF] outlet	STACK TEMP [°F]	PROBE TEMP [°F]	FILTER BOX [°F]	LAST IMP TEMP [°F]	METER EXHAUST O_2 [% vol]	METER EXHAUST CO_2 [% vol]
	1040	0					547.800								
A-	1050	10	-19.33	0.67	0.46	4.0	551.615	81	80	361	319	NA	65	3.4	16.7
	1100	20		0.67	0.46	4.0	555.387	82	81	365	324		58	3.3	16.7
	1110	30		0.67	0.44	4.5	559.131	83	82	363	327		56	3.2	16.9
	1120	40		0.67	0.44	5.0	562.905	86	83	363	327		59	3.3	16.7
F	1130	50	-18.3	0.40	.27	3.0	565.891	87	84	325	323		62	4.4	15.7
	1140	60		0.40	0.27	3.5	568.960	88	85	322	325		62	4.1	16.1
	1150	70		0.40	0.27	3.5	571.742	89	85	326	325		61	4.4	15.7
	1200	80		0.40	0.27	3.5	574.862	89	86	322	324		62	4.4	15.7
C	1210	90	-18.98	0.92	0.62	6.0	579.194	91	87	293	323		60	4.1	16.0
	1220	100		0.92	0.62	6.5	583.515	91	87	293	309		59	4.1	16.0
	1230	110		0.92	0.62	7.0	587.865	92	88	294	305		61	3.9	16.2
	1240	120		0.92	0.62	8.0	592.285	92	89	296	306		63	3.8	16.3
				Rods											
AVERAGE		120	-18.87	0.645	0.45		44.485	76.2		326.9				3.9	16.2

Sample Train Leak Checks: Pre Test 0.000 ft^3 @ 10 in. Hg; Post Test 0.000 ft^3 @ 8 in. Hg

Pitot Tube Leak Checks: PreTest ok @ 8 in. H_2O; Post Test ____ @ ____ in. H_2O

CONSOLENERGY.

NOTE: Purge for 10 minutes at end of sampling.

ONTARIO HYDRO Hg SAMPLING AND SPECIATION FIELD DATA SHEET

Page _____ of _____

TEST ID	FGDI - 4	METER BOX	N-4	CAL. DATA: delta H	1.932
PLANT	PLANT 7	PITOT TUBE DESC	E-6	Y	0.966
LOCATION	UNIT 1 - FGD INLET	PROBE LENGTH [ft]	10	C(p)	0.835
DATE	8/19/04	NOZZLE ID [inch]	1/4" E, 0.248"	FILTER BOX SETTING	NA
OPERATOR(S)	GLC/SAK	%H_2O (Assumed)		PROBE HTR SETTING	325
AMBIENT TEMP [°F]	84	FILTER ID	4	DUCT X-SECTION	circ ? rect ? other:
BAR. PRESS. [" Hg]	29.40	K FACTOR	2.52	DUCT DIMENSIONS	DUCT AREA

Comments: Three Points in ~~two~~ ONE port per two ducts

TRAVERSE POINT [port-inch]	CLOCK TIME (24-hr)	SAMPLE TIME [minute]	STATIC PRES [" H_2O]	PITOT HEAD [" H_2O]	METER DIFF PRESSURE [" H_2O]	METER VACUUM [" Hg]	METER READING [ft^3]	METER TEMP [oF] (6) inlet	(7) outlet	STACK TEMP (1) [°F]	PROBE TEMP (2) [°F]	FILTER BOX [°F]	LAST IMP (4) TEMP [°F]	METER EXHAUST O_2 [% vol]	CO_2 [% vol]
	1040	0					947.30						66		
-21.00		10		0.82	2.10	7.5	955.24	99	95	347	208		[redacted]	4.6	
21 ~~-63.00~~		20	-20.91	0.83	2.10	8.0	963.33	104	97	347	213		73	4.6	
63 ~~-105.00~~		30		0.74	1.85	7.5	970.98	106	98	350	212		66	4.5	
-A2															
E															
63 ~~-21.00~~		40		0.72	1.80	7.5	978.59	107	99	350	211		61	4.6	
105 ~~-63.00~~		50		0.72	1.80	7.5	986.13	109	101	346	224		60	4.6	
-105.00		60	-20.61	0.72	1.80	8.0	993.69	108	102	346	223		60	4.6	
			POST	-A2	LEAK TEST: 0.012 @11"			PRE-A1 LEAK: 0.012 @10"						~~4.6~~	
RESTART	1155						994.40								
-21.00		70		0.96	2.40	10.50	03.12	107	103	319	222		54	4.6	
21 ~~-63.00~~		80	-21.24	0.96	2.40	11.0	11.80	108	103	319	227		59	4.5	
63 ~~-105.00~~		90		0.87	2.20	10.5	20.09	108	104	309	254		58	4.4	
A1															
E															
63 ~~-21.00~~		100		0.88	2.20	11.0	28.37	110	104	308	240		55	4.6	
105 ~~-63.00~~		110		0.65	1.65	9.5	35.59	110	105	305	245		55	4.6	
-105.00	1255	120	-20.52	0.65	1.65	10.5	42.73	111	105	305	244		55	4.8	
				Zeus											
AVERAGE			-20.82	0.790	1.996		94.72	104.3		329.3				4.58	

Sample Train Leak Checks: Pre Test 0.012 ft^3 @ 11 in. Hg; Post Test _____ ft^3 @ 11 in. Hg

Pitot Tube Leak Checks: PreTest _____ @ _____ in. H_2O; Post Test 0 @ 5 in. H_2O

.005 ft^3/30 sec

CONSOLENERGY

NOTE: Purge for 10 minutes at end of sampling.

ONTARIO HYDRO Hg SAMPLING AND SPECIATION FIELD DATA SHEET

TEST ID	STK - 4	METER BOX	N-3	CAL. DATA: delta H	1.916	Comments:	Four ports, thre points each, 10 minute readings
PLANT	PLANT 7	PITOT TUBE DESC	E-13	Y	1.038		
LOCATION	UNIT 1 - STACK	PROBE LENGTH [ft]	6	C(p)	0.844		
DATE	8-19-04	NOZZLE ID [inch]	3/16 B 0.188	FILTER BOX SETTING	250 325		
OPERATOR(S)	D.C., B.S.	%H_2O (Assumed)		PROBE HTR SETTING	250 325		
AMBIENT TEMP [°F]	~92°	FILTER ID	# 4	DUCT X-SECTION	circ ? rect ?	other:	
BAR. PRESS. [" Hg]	29.40	K FACTOR	1.03	DUCT DIMENSIONS		DUCT AREA	

TRAVERSE POINT [port-inch]	CLOCK TIME (24-hr)	SAMPLE TIME [minute]	STATIC PRES [" H_2O]	PITOT HEAD [" H_2O]	METER DIFF PRESSURE [" H_2O]	METER VACUUM [" Hg]	METER READING [ft^3]	METER TEMP (6) [oF] inlet	METER TEMP (7) [oF] outlet	STACK TEMP (1) [°F]	PROBE TEMP (2) [°F]	FILTER BOX (3) [°F]	LAST IMP TEMP (4) [°F]	METER EXHAUST O_2 [% vol]	METER EXHAUST CO_2 [% vol]
	1040	0					016.70								
-9.60	START	10		2.10	2.16	5	024.27	101	93	137	297	311	58	4.4	15.6
-31.80		20	-2.614	2.40	2.47	5	032.39	107	96	137	270	314	65	4.7	15.3
(A) -64.50		30		2.30	2.37	5	040.46	111	99	138	219	310	61	4.2	15.8
			L.C. "OK" RESTART				040.60								
-9.60		40		1.60	1.65	4	047.33	111	101	138	242	318	59	4.6	15.5
-31.80		50	-2.571	2.30	2.37	5.5	055.37	114	103	138	248	321	59	4.4	15.6
(B) -64.50		60		2.90	2.99	6.5	064.37	117	105	138	222	317	62	4.4	15.6
			L.C. "OK" RESTART				064.50								
-9.60		70		1.80	1.85	5	071.60	115	106	137	252	322	64	4.4	15.6
-31.80		80	-3.007	2.90	2.99	6.5	080.58	118	107	138	251	322	61	4.4	15.6
(C) -64.50		90		2.80	2.88	6.5	089.46	120	109	138	218	318	59	4.4	15.6
			L.C. "OK" RESTART				089.60		~~109~~						
-9.60		100		2.30	2.37	6	097.67	118	109	138	240	315	57	4.4	15.6
-31.80		110	-2.958	2.60	2.68	6.5	106.22	120	110	137	247	313	59	4.3	15.7
(D) -64.50	1304	120		2.60	2.68	6.5	114.77	121	111	138	226	312	62	4.4	15.6
	STOP			RNS											
AVERAGE			-2.79	2.366	2.455		97.66	109.25		137.7				4.4	15.6

Sample Train Leak Checks: Pre Test OK ft^3 @ 10 in. Hg; Post Test OK ft^3 @ 10 in. Hg

Pitot Tube Leak Checks: PreTest OK @ 7 in. H_2O; Post Test OK @ 7 in. H_2O

CONSOL ENERGY

NOTE: Purge for 10 minutes at end of sampling.

Axial Flow Check

Location	SCR In	Duct Ht, "		Barometric	29.52
Date	8/16/04	Duct ID,"		Static	
Time		Duct Area	ft^2	Dry Bulb	
Tube I.D.	S-53A	% O_2		Wet Bulb	
C-Factor		% CO_2		% H_2O	
Operator(s)		% N_2		W.M.Wt	

PORT/ POINT	DISTANCE [" From Wall]	TEMP [°F]	DELTA P [" H_2O]	VELOCITY [Ft/Sec]	Null Angle	
D 4'		666	0.423		55	
5'						>55
6'						
B 4'		—	—		>55	
5'		642	0.0882		154	
6'		634	0.0866		+52	-3.52
C 4		657	0.137		+54	
5		660	0.1490		+55	
6		658	0.100		+51	-3.67
A 4		790	unsteady		+52	
5		776	0.0474		+55	
6		~~790~~	0.0396		+54	-3.54
Average						
Maximum						
Minimum						
SDEV						

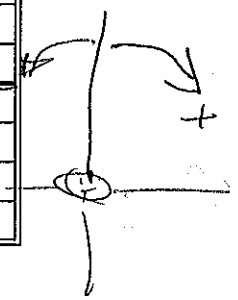

DATA SUMMARY	
Velocity, [fps]	
acfm	
scfm	
dscfm	
Ex Air Free cfm	
Est. MM Btu/hr Heat Input	
Est. Firing Rate, lb/hr	

Box NS

Y = 1.006

ΔH = 2.009

E-S 0.832

ideal 0.326

S/16A 0.312

K = ~~0.48~~ 4.81

A B C O_2 probe D

O O O O O

Axial Flow Check

Location	SCR OUT	Duct Ht, "		Barometric	29.54
Date	8/16/04	Duct ID,"		Static	
Time	1700-1730	Duct Area	ft²	Dry Bulb	
Tube I.D.	S-53A	% O_2		Wet Bulb	
C-Factor		% CO_2		% H_2O	
Operator(s)	LWR, JW, RLO	% N_2		W.M.Wt	

PORT/ POINT	DISTANCE [" From Wall]	TEMP [°F]	DELTA P [" H_2O]	VELOCITY [Ft/Sec]	Null Angle	
1		690	0.0328		~0	
2		698	0.0354		~0	
3		693	0.0372		~0	-10.78
4		694	0.0401		~0	-9.76
5		681	0.0373		~0	
6		691	0.0336		~0	-10.74
Average						
Maximum						
Minimum						
SDEV						

Box N1
Y = 0.984
ΔH = 1.981
E-15 0.838
ideal 0.416
7/16 0.436
K = 17.21

DATA SUMMARY	
Velocity, [fps]	
acfm	
scfm	
dscfm	
Ex Air Free cfm	
Est. MM Btu/hr Heat Input	
Est. Firing Rate, lb/hr	

1	2	3	4	5	6
0	0	0	0	0	0

Axial Flow Check

Location	AHO	Duct Ht, "		Barometric	29.52
Date	8-16-04	Duct ID,"		Static	-19.65
Time		Duct Area	ft^2	Dry Bulb	
Tube I.D.	S-50	% O_2		Wet Bulb	
C-Factor	0.819	% CO_2		% H_2O	
Operator(s)		% N_2		W.M.Wt	

PORT/ POINT	DISTANCE [" From Wall]	TEMP [°F]	DELTA P [" H_2O]	VELOCITY [Ft/Sec]	Null Angle
C-1		286		0.819	0
6		312	0.323		0
11		290	0.61		0
Average		296	0.604		
Maximum					
Minimum					
SDEV					

DATA SUMMARY	
Velocity, [fps]	
acfm	
scfm	
dscfm	
Ex Air Free cfm	
Est. MM Btu/hr Heat Input	
Est. Firing Rate, lb/hr	

N-2
Y= 0.976
ΔH@ 1.956
Ideal 0.192
Actual 0.180
K= 0.715

Flow is down

Axial Flow Check

Location	FGD Inlet	Duct Ht, "		Barometric	
Date		Duct ID,"		Static	
Time		Duct Area	ft^2	Dry Bulb	
Tube I.D.		% O_2		Wet Bulb	
C-Factor		% CO_2		% H_2O	
Operator(s)		% N_2		W.M.Wt	

	PORT/ POINT	DISTANCE [" From Wall]	TEMP [°F]	DELTA P [" H_2O]	VELOCITY [Ft/Sec]	Null Angle	STATIC
26"	A1-B-1	21	309	0.907			
	A1-B-2	63	305	0.934			
	A1-B-3	105	299	0.981			
			314				
	A1-E-1	21 47	[illegible]	1.411			
26"	A1-E-2	63 89	307	0.998			-21.43
	A1-E-3	105 131	302	0.959			
	A2-B-1	21	332	0.893			
28"	A2-B-2	63	341	0.812			-20.03
	A2-B-3	105	320	0.936			
	A2-E-1	21	348	1.006		~100 CW	[illegible]
28"	A2-E-2	63	348	0.853			-19.15
	A2-E-3	105	340	1.006			
Average			327	1.04			
Maximum							
Minimum							
SDEV							

DATA SUMMARY	
Velocity, [fps]	
acfm	
scfm	
dscfm	
Ex Air Free cfm	
Est. MM Btu/hr Heat Input	
Est. Firing Rate, lb/hr	

Meter Box

N-4

Y = 0.966

ΔH = 1.932

E-6 0.835

Ideal Dn = 0.230

1/4" E 0.248

K = 2.52

Axial Flow Check

Location	Stack	Duct Ht, "		Barometric	29.53
Date	8-17-04	Duct ID,"		Static	-1.48
Time	0845-0917	Duct Area	ft^2	Dry Bulb	
Tube I.D.	S-53	% O_2		Wet Bulb	
C-Factor		% CO_2		% H_20	
Operator(s)	D.C., B.S.	% N_2		W.M.Wt	

PORT/ POINT	DISTANCE [" From Wall]	TEMP [°F]	DELTA P [" H_2O]	VELOCITY [Ft/Sec]	Null Angle	
A-1	9.6	128.9		1.652		
A-2	31.8	129.0		2.159		-1.208
A-3	64.5	129.0		2.267		
B-1	9.6	129.1		1.610		
B-2	31.8	129.1		2.257		-1.330
B-3	64.5	129.1		2.744		
C-1	9.6	129.0		1.941		
C-2	31.8	129.0		2.821		-1.781
C-3	64.5	129.1		2.614		
D-1	9.6	129.2		2.049		
D-2	31.8	129.4		2.844		-1.594
D-3	64.5	129.4		2.631		
Average		-129	2.30			
Maximum						
Minimum						
SDEV						

DATA SUMMARY	
Velocity, [fps]	
acfm	
scfm	
dscfm	
Ex Air Free cfm	
Est. MM Btu/hr Heat Input	
Est. Firing Rate, lb/hr	

N-3

Y = 1.038

H = 1.916

E-13 = 0.844

ideal 0.178

3/16B 0.188

K = 1.03

ONTARIO HYDRO Hg SAMPLING AND SPECIATION FIELD DATA SHEET

Page _____ of _____

TEST ID	FGDI- 1	METER BOX	N-1	CAL. DATA: delta H	1.981
PLANT	Plant 7	PITOT TUBE DESC	E-12	Y	0.984
LOCATION	Unit 1 FGD Inlet	PROBE LENGTH [ft]	10	C(p)	0.835
DATE	11-5-04	NOZZLE ID [inch]	1/4" E 0.248	FILTER BOX SETTING	325
OPERATOR(S)	DO JC	%H_2O (Assumed)	~~10%~~ 8%	PROBE HTR SETTING	325
AMBIENT TEMP [°F]		FILTER ID		DUCT X-SECTION	circ ? / rect ? / other:
BAR. PRESS. [" Hg]	29.50	K FACTOR	2.46	DUCT DIMENSIONS	15'x10.5' (2) DUCT AREA 315 ft^2

Comments: Three Points per ~~port per four ports~~ single port
Ten minutes per ~~point~~ reading
20 minutes per point

TRAVERSE POINT [port-inch]	CLOCK TIME (24-hr)	SAMPLE TIME [minute]	STATIC PRES [" H_2O]	PITOT HEAD [" H_2O]	METER DIFF PRESSURE [" H_2O]	METER VACUUM [" Hg]	METER READING [ft^3]	METER TEMP [oF] inlet	METER TEMP [oF] outlet	STACK TEMP [°F]	PROBE TEMP [°F]	FILTER BOX [°F]	LAST IMP TEMP [°F]	METER EXHAUST O_2 [% vol]	METER EXHAUST CO_2 [% vol]
	0920	0					742.175								
A1-E-105.0	0930	10	-14.22	0.73	-1.8	7.0	749.30	66	66	290	290	NA	49		
-105.0	0940	20		0.73	1.8	7.0	756.12	70	66	291	278		43	3.9	16.2
-63.0	0950	30	-13.95	0.66	1.7	7.0	763.15	77	68	293	273		50	~~3.8~~	
-63.00	1000	40		0.68	1.7	7.0	769.88	78	69	294	276		52	3.7	16.3
-21.00	1010	50	-13.82	0.81	2.0	8.0	777.40	81	72	302	263		51		
-21.00	1020	60		0.89	2.2	8.5	785.61	82	73	303	268		52	3.8	16.2
					lk chk	0.000 @ 10"									
	1034						786.29								
A2E-105.00	1044	70	-13.85	0.55	1.3	5.5	792.51	79	74	330	280		53		
-105.00	1054	80		0.55	1.3	5.5	798.65	82	75	331	286		49	6.2	13.9
-63.00	1104	90	-13.90	0.58	1.4	6.5	805.04	83	76	336	282		52		
-63.00	1114	100		0.58	1.4	9.0	811.310	84	77	336	263		52	5.6	14.5
-21.00	1124	110	-13.84	0.63	1.5	8.0	817.89	86	78	327	280		54		
-21.00	1134	120		0.67	1.6	8.5	825.11	87	79	329	286		55		
AVERAGE			-13.99	0.670	1.64		82.255	76.2		313.5				4.6	15.4

Sample Train Leak Checks: Pre Test 0.010 ft^3 @ 10 in. Hg; Post Test 0.025 ft^3 @ 10 in. Hg

Pitot Tube Leak Checks: PreTest OK @ 7 in. H_2O; Post Test _____ @ _____ in. H_2O

CONSOL ENERGY

NOTE: Purge for 10 minutes at end of sampling.

ONTARIO HYDRO Hg SAMPLING AND SPECIATION FIELD DATA SHEET

TEST ID	STK - 1	METER BOX	N-2	CAL. DATA: delta H	1.956
PLANT	Plant 7	PITOT TUBE DESC	E-2	Y	0.976
LOCATION	Unit 1 Stack	PROBE LENGTH [ft]	6	C(p)	0.837
DATE	11-5-04	NOZZLE ID [inch]	3/16 0.188	FILTER BOX SETTING	325
OPERATOR(S)	DPC BPS	%H_2O (Assumed)	17.0	PROBE HTR SETTING	325
AMBIENT TEMP [°F]	54	FILTER ID	5	DUCT X-SECTION	circ ? / rect ? / other:
BAR. PRESS. [" Hg]	29.50	K FACTOR	0.970	DUCT DIMENSIONS	18 ft. / DUCT AREA 254.5 ft^2

Comments: Three Points per port per four ports
Ten minutes per point

TRAVERSE POINT [port-inch]	CLOCK TIME (24-hr)	SAMPLE TIME [minute]	STATIC PRES [" H_2O]	PITOT HEAD [" H_2O]	METER DIFF PRESSURE [" H_2O]	METER VACUUM [" Hg]	METER READING [ft^3]	METER TEMP [oF] (6) inlet	METER TEMP [oF] (7) outlet	STACK TEMP [°F] (1)	PROBE TEMP [°F] (2)	FILTER BOX [°F] (3)	LAST IMP TEMP [°F] (4)	METER EXHAUST O_2 [% vol]	METER EXHAUST CO_2 [% vol]
	0920	0					354.50								
A -64.5	0930	10		2.30	2.23	5.6	362.86	67	60	126	245	323	47	4.2	15.8
A -31.8	0940	20	-2.966	2.30	2.23	5.6	370.82	74	63	127	247	323	53	4.1	15.9
A -9.6	0950	30		2.00	1.94	5.0	378.26	77	65	127	283	323	56	4.0	15.9
	1004						378.41								
B -64.50	1014	40		2.60	2.52	6.2	387.07	78	68	127	274	322	49	4.1	15.9
B -31.80	1024	50	-2.130	2.00	1.94	5.0	394.61	81	70	127	270	322	52	3.9	16.1
B -9.60	1034	60		1.30	1.26	3.5	400.91	81	72	126	323	323	52	3.9	16.0
	1040						401.05								
C -64.50	1050	70		2.20	2.13	5.3	409.00	81	73	126	275	323	48	4.1	16.0
C -31.80	1100	80	-2.495	2.00	1.94	5.0	416.52	83	74	127	268	323	50	4.0	16.0
C -9.60	1110	90		1.70	1.65	4.4	423.52	84	75	126	306	324	51	4.1	15.9
	1119						423.63								
D -64.50	1129	100		2.60	2.52	6.1	432.26	82	75	126	217	321	49	4.2	15.8
D -31.80	1139	110	-2.979	2.60	2.52	6.3	440.93	85	76	125	245	319	51	4.0	16.0
D -9.60	1149	120		2.10	2.04	5.2	448.71	86	77	125	266	323	54	4.0	16.0
AVERAGE			-2.62	2.124	2.0~~2~~8		93.51	75.3		126.3				4.1	15.9

Sample Train Leak Checks: Pre Test 0.000 ft^3 @ -10 in. Hg; Post Test 0.000 ft^3 @ -10 in. Hg

Pitot Tube Leak Checks: PreTest OK @ 7 in. H_2O; Post Test OK @ 7 in. H_2O

CONSOLENERGY

NOTE: Purge for 10 minutes at end of sampling.

ONTARIO HYDRO Hg SAMPLING AND SPECIATION FIELD DATA SHEET

TEST ID	FGDI- 2	METER BOX	N-1	CAL. DATA: delta H	1.981
PLANT	Plant 7	PITOT TUBE DESC	E-12	Y	0.984
LOCATION	Unit 1 FGD Inlet	PROBE LENGTH [ft]	10	C(p)	0.835
DATE	11-5-04	NOZZLE ID [inch]	0.248	FILTER BOX SETTING	325
OPERATOR(S)	DO JL	%H_2O (Assumed)	8	PROBE HTR SETTING	325
AMBIENT TEMP [°F]	57	FILTER ID	2	DUCT X-SECTION	circ ? / rect ? / other:
BAR. PRESS. [" Hg]	29.51	K FACTOR	2.46/2.50*	DUCT DIMENSIONS	15'x10.5' (2)
				DUCT AREA	315 ft^2

Comments: Three Points per port per four ports
Ten minutes per point
*Changed K factor Tm 975 to 95°F

TRAVERSE POINT [port-inch]	CLOCK TIME (24-hr)	SAMPLE TIME [minute]	STATIC PRES [" H_2O]	PITOT HEAD [" H_2O]	METER DIFF PRESSURE [" H_2O]	METER VACUUM [" Hg]	METER READING [ft^3]	METER TEMP [oF] inlet	METER TEMP [oF] outlet	STACK TEMP [°F]	PROBE TEMP [°F]	FILTER BOX [°F]	LAST IMP TEMP [°F]	METER EXHAUST O_2 [% vol]	METER EXHAUST CO_2 [% vol]
	1252	0					852.40								
-105.0	1302	10	-14.14	0.54	1.3	7.0	858.52	91	88	320	268	NA	66	3.7	16.2
-105.0	1312	20		0.60	1.5*	8.0	865.11	95	90	332	289		52		
-63.0	1322	30	-13.90	0.62	1.5	8.0	871.64	97	90	337	274		54	3.7	16.3
-63.00	1332	40		0.62	1.5	9.0	878.16	98	91	336	281		58		
-21.00	1342	50	-14.00	0.68	1.7	11.0	885.[illegible]	95	90	337	278		56	3.8	16.2
-21.00	1352	60		0.68	1.7	11.0	892.22	91	88	335	269		55		
	1400						892.42								
-105.00	1410	70	-14.55	0.62	1.5	8.0	899.07	83	83	284	290		59	4.4	15.6
-105.00	1420	80		0.62	1.5	9.0	905.80	84	81	291	294		51		
-63.00	1430	90	-14.71	0.70	1.7	11.0	912.12	82	79	292	293		49	4.3	15.6
-63.00	1440	100		0.70	1.7	11.5	919.76	83	78	295	292		49		
-21.00	1450	110	-14.87	0.86	2.2	15.0	927.73	81	77	301	298		49	4.1	15.9
-21.00	1500	120		0.86	2.2	15.5	935.71	80	75	302	286		52		
AVERAGE			-14.37	0.672	1.67		83.11	86.3		313.5				4.0	16.0

Sample Train Leak Checks: Pre Test 0.000 ft^3 @ 10 in. Hg; Post Test 0.010 ft^3 @ 15.5 in. Hg

Pitot Tube Leak Checks: PreTest OK @ 7 in. H_2O; Post Test OK @ 8 in. H_2O

CONSOLENERGY

NOTE: Purge for 10 minutes at end of sampling.

ONTARIO HYDRO Hg SAMPLING AND SPECIATION FIELD DATA SHEET

TEST ID	STK - 2	METER BOX	N-2	CAL. DATA: delta H	1.956
PLANT	Plant 7	PITOT TUBE DESC	E-2	Y	0.976
LOCATION	Unit 1 Stack	PROBE LENGTH [ft]	6	C(p)	0.837
DATE	11-5-04	NOZZLE ID [inch]	3/16 B0155	FILTER BOX SETTING	325
OPERATOR(S)	DPC, BPS	%H_2O (Assumed)		PROBE HTR SETTING	325
AMBIENT TEMP [°F]	55	FILTER ID	6	DUCT X-SECTION	circ ? / rect ? / other:
BAR. PRESS. [" Hg]	29.51	K FACTOR	0.970	DUCT DIMENSIONS	18 ft.
				DUCT AREA	254.5 ft^2

Comments: Three Points per port per four ports
Ten minutes per point

TRAVERSE POINT [port-inch]	CLOCK TIME (24-hr)	SAMPLE TIME [minute]	STATIC PRES [" H_2O]	PITOT HEAD [" H_2O]	METER DIFF PRESSURE [" H_2O]	METER VACUUM [" Hg]	METER READING [ft^3]	METER TEMP [oF] (5) inlet	METER TEMP [oF] (6) outlet	STACK TEMP [°F] (1)	PROBE TEMP [°F] (2)	FILTER BOX [°F] (3)	LAST IMP TEMP [°F] (4)	METER EXHAUST O_2 [% vol]	METER EXHAUST CO_2 [% vol]
	1253	0					454.76								
D -64.5	1303	10		2.50	2.43	5.7	463.32	79	75	127	309	322	44	4.4	15.6
D -31.8	1313	20	-1.543	2.60	2.52	6.0	471.96	85	76	127	295	323	50	4.5	15.5
D -9.6	1323	30		2.20	2.13	5.2	479.92	87	77	126	306	323	54	4.4	15.6
	1330						480.04								
C -64.50	1340	40		2.60	2.52	5.9	488.69	85	77	127	301	304	50	4.4	15.6
C -31.80	1350	50	-1.568	2.40	2.33	5.8	497.07	87	78	127	300	317	51	4.3	15.7
C -9.60	1400	60		1.90	1.84	4.7	504.45	86	78	126	300	304	52	4.2	15.8
	1408						504.60								
B -64.50	1418	70		2.60	2.52	6.0	513.27	85	78	126	309	322	50	4.7	15.3
B -31.80	1428	80	-1.851	2.00	1.94	4.9	520.82	87	79	127	299	320	52	4.6	15.4
B -9.60	1438	90		1.30	1.26	3.8	527.05	87	79	126	319	323	53	4.5	15.4
	1449						527.20								
A -64.50	1459	100		2.30	2.23	5.8	535.40	85	79	126	309	323	53	4.6	15.5
A -31.80	1509	110	-1.348	2.20	2.13	5.5	543.39	88	79	127	290	323	58	4.5	15.5
A -9.60	1519	120		1.90	1.84	5.1	550.85	89	80	126	294	323	62	4.5	15.5
AVERAGE			-1.67	2.191	2.14		95.67	81.9		126.5				4.5	15.5

Sample Train Leak Checks: Pre Test 0.000 ft^3 @ -10 in. Hg; Post Test 0.000 ft^3 @ -10 in. Hg

Pitot Tube Leak Checks: PreTest OK @ 7 in. H_2O; Post Test OK @ 7 in. H_2O

CONSOLENERGY

NOTE: Purge for 10 minutes at end of sa

ONTARIO HYDRO Hg SAMPLING AND SPECIATION FIELD DATA SHEET

Page E of 3

TEST ID	FGDI-3	METER BOX	N-1	CAL. DATA: delta H	1.981
PLANT	Plant 7	PITOT TUBE DESC	E-12	Y	0.984
LOCATION	Unit 1 FGD Inlet	PROBE LENGTH [ft]	10	C(p)	0.835
DATE	11-5-04	NOZZLE ID [inch]	0.248	FILTER BOX SETTING	325
OPERATOR(S)	DO JL	%H_2O (Assumed)	8	PROBE HTR SETTING	325
AMBIENT TEMP [°F]		FILTER ID	3	DUCT X-SECTION	circ ? / rect ? / other:
BAR. PRESS. [" Hg]	29.44	K FACTOR	2.5	DUCT DIMENSIONS	15'x10.5' (2) DUCT AREA 315 ft^2

Comments: Three Points per ~~port~~ ~~four~~ port only
Ten minutes per ~~point~~ vdg
20 min per point

TRAVERSE POINT [port-inch]	CLOCK TIME (24-hr)	SAMPLE TIME [minute]	STATIC PRES [" H_2O]	PITOT HEAD [" H_2O]	METER DIFF PRESSURE [" H_2O]	METER VACUUM [" Hg]	METER READING [ft^3]	METER TEMP [oF] inlet	METER TEMP [oF] outlet	STACK TEMP [°F]	PROBE TEMP [°F]	FILTER BOX [°F]	LAST IMP TEMP [°F]	METER EXHAUST O_2 [% vol]	METER EXHAUST CO_2 [% vol]
	1550	0					944.90								
A-1 -105.0	1600	10	-14.95	0.77	1.9	8.0	952.34	80	78	294	268	NA	62	4.0	16.0
-105.0	1610	20		0.77	1.9	8.0	959.86	86	79	295	281		52		
-63.0	1620	30	-15.10	0.77	1.9	8.0	967.26	90	80	296	280		58	4.2	15.8
-63.00	1630	40		0.75	1.9	8.0	974.57	91	82	296	284		58		
-21.00	1640	50	-15.40	0.77	1.9	8.0	981.96	92	83	296	266		56	4.1	15.9
-21.00	1650	60	-	0.89	2.2	10.0	990.14	92	84	308	263		56		
					leak check 0.000 @ 10" Hg										
	1700						991.20	~~89~~	~~85~~	~~336~~	~~260~~		~~52~~		
A-2 -105.00	1710	70	-14.45	0.57	1.4	7.0	997.55	89	85	336	260		52	3.6	16.4
-105.00	1720	80		0.64	1.6	9.0	1004.40	89	84	336	291		47		
-63.00	1730	90	-14.68	0.64	1.6	10.0	1011.15	89	83	336	295		50	3.8	16.2
-63.00	1740	100		0.62	1.6	11.0	1017.95	89	83	338	293		52		
-21.00	1750	110	-14.78	0.68	1.7	13.0	1024.77	90	83	338	284		53	3.8	16.3
-21.00	1800	120		0.68	1.7	12.0	1031.88	89	83	335	290		52		
AVERAGE			-14.89	0.710	1.78		85.92	85.5		317				3.9	16.1

Sample Train Pre Test 0.000 ft^3 @ 10 in. Hg
Leak Checks: Post Test 0.010 ft^3 @ 15 in. Hg

Pitot Tube PreTest OK @ 8 in. H_2O
Leak Checks: Post Test OK @ 7 in. H_2O

CONSOL ENERGY

147 / 5 = 73.42 / 5 = 23

63 70 61 66

342

63 70 61 82 66

14.70

NOTE: Purge for 10 minutes at end of sampling.

ONTARIO HYDRO Hg SAMPLING AND SPECIATION FIELD DATA SHEET

TEST ID	STK - 3
PLANT	Plant 7
LOCATION	Unit 1 Stack
DATE	11-5-01
OPERATOR(S)	DPC, BPS
AMBIENT TEMP [°F]	60
BAR. PRESS. [" Hg]	29.44

METER BOX	N-2
PITOT TUBE DESC	E-2
PROBE LENGTH [ft]	6
NOZZLE ID [inch]	3/16 B 0.188
%H_2O (Assumed)	
FILTER ID	6
K FACTOR	0.970

CAL. DATA: delta H	1.956
Y	0.976
C(p)	0.837
FILTER BOX SETTING	325
PROBE HTR SETTING	325
DUCT X-SECTION	circ ? / rect ? / other:
DUCT DIMENSIONS	18 ft.
DUCT AREA	254.5 ft^2

Comments: Three Points per port per four ports
Ten minutes per point

TRAVERSE POINT [port-inch]	CLOCK TIME (24-hr)	SAMPLE TIME [minute]	STATIC PRES [" H_2O]	PITOT HEAD [" H_2O]	METER DIFF PRESSURE [" H_2O]	METER VACUUM [" Hg]	METER READING [ft^3]	METER TEMP [oF] (6) inlet	METER TEMP [oF] (7) outlet	STACK TEMP [°F] (1)	PROBE TEMP [°F] (2)	FILTER BOX [°F] (3)	LAST IMP TEMP [°F] (4)	METER EXHAUST O_2 [% vol]	METER EXHAUST CO_2 [% vol]
	15	0					557.05								
A -64.5	1600	10		2.40	2.33	5.7	565.52	84	78	126	214	319	49	4.5	15.6
A -31.8	1610	20	-2.385	2.30	2.23	5.7	573.74	88	79	126	240	325	57	4.6	15.4
A -9.6	1620	30		2.20	2.13	5.2	581.72	89	80	126	275	325	57	4.5	15.5
	1628						581.84								
B -64.50	1638	40		2.70	2.62	6.3	590.68	87	80	126	280	260	49	4.5	15.5
B -31.80	1648	50	-3.100	2.70	2.62	6.2	599.51	90	81	126	267	323	50	4.5	15.5
B -9.60	1658	60		1.40	1.36	3.8	606.02	89	81	126	310	325	50	4.4	15.6
	1704						606.16								
C -64.50	1714	70		2.20	2.13	5.4	614.17	87	80	126	260	324	49	4.4	15.6
C -31.80	1724	80	-2.713	2.40	2.33	5.8	622.52	90	81	126	264	322	52	4.5	15.5
C -9.60	1734	90		2.10	2.04	5.3	630.39	90	81	126	290	323	55	4.5	15.5
	1740						630.52							~~4.4~~	~~15.6~~
D -64.50	1750	100		2.60	2.52	6.1	639.24	89	81	126	220	323	51	4.4	15.6
D -31.80	1800	110	-2.857	2.70	~~2.61~~ 2.61	6.2	648.06	91	82	126	247	324	55	4.6	15.4
D -9.60	1810	120		2.30	2.23	5.8	656.30	91	82	126	279	323	56	4.6	15.4
AVERAGE			-2.75	2.32	2.26		98.86	84.6		126				4.5	15.5

Sample Train Leak Checks: Pre Test 0.000 ft^3 @ -10 in. Hg; Post Test 0.020 ft^3 @ -10 in. Hg

Pitot Tube Leak Checks: PreTest OK @ 7 in. H_2O; Post Test OK @ 7 in. H_2O

CONSOLENERGY

NOTE: Purge for 10 minutes at end of sampling.

APPENDIX B

Plant Process Data

#NAME?	MW GROSS GENERATION MW	Klbs/hr FEEDWATER FLOW-TEMP COMP	PPM CO2 CONC RAW 1 MIN	MSCFH STACK FLOW-1 MIN AVG	lbs/MBTU SO2 PPM-LOW RANGE-1 MIN	% FLUE GAS OXYGEN	PPM NOX CONC RAW 1 MIN
Timestamp	1G3000.PV - Average	1F3087.PV - Average	1M30015.PV - Average	1M30087.PV - Average	1M30010.PV - Average	1D3007.PV - Average	1M30014.PV - Average
08/19/2004 10:40	542.46	3975.84	11.96	69.28	128.19	2.97	14.40
08/19/2004 10:50	543.00	3965.26	12.02	69.06	129.54	2.90	13.35
08/19/2004 11:00	547.33	4001.04	11.98	69.22	130.06	2.90	15.21
08/19/2004 11:10	546.59	4003.99	12.03	69.52	131.36	2.98	14.05
08/19/2004 11:20	545.11	4006.61	11.96	69.13	128.99	2.87	15.46
08/19/2004 11:30	546.94	3994.28	12.07	69.30	130.06	2.83	13.90
08/19/2004 11:40	546.57	3983.78	12.05	69.32	130.64	2.92	14.39
08/19/2004 11:50	546.86	3994.46	12.03	69.60	129.95	2.94	14.49
08/19/2004 12:00	546.74	4011.77	12.00	69.55	129.54	2.91	14.94
08/19/2004 12:10	546.61	3995.82	12.07	69.08	131.24	2.92	14.85
08/19/2004 12:20	546.73	3995.24	12.06	69.12	131.50	2.91	15.27
08/19/2004 12:30	546.63	3988.86	12.10	68.95	133.45	2.93	14.39
08/19/2004 12:40	546.80	3994.27	12.06	68.96	133.67	2.86	15.24
08/19/2004 12:50	546.85	3991.39	12.10	68.68	134.34	2.87	14.46
08/19/2004 13:00	546.45	4015.89	12.05	68.59	135.10	2.94	15.64

#NAME? Timestamp	KPPH A FDR COAL FLOW 1C3400.pv - Average	KPPH B FDR COAL FLOW 1C3410.Pv - Average	KPPH C FDR COAL FLOW 1C3420.Pv - Average	KPPH D FDR COAL FLOW 1C3430.Pv - Average	KPPH E FDR COAL FLOW 1C3440.Pv - Average	KPPH F FDR COAL FLOW 1C3450.Pv - Average	KPPH Total COAL FLOW
08/19/2004 10:40	0.27	96.59	95.82	97.34	99.62	63.54	453.18
08/19/2004 10:50	0.27	96.78	96.00	97.53	99.59	63.56	453.73
08/19/2004 11:00	0.26	97.49	96.73	98.18	100.42	63.54	456.61
08/19/2004 11:10	0.27	96.54	95.68	97.18	99.50	63.52	452.69
08/19/2004 11:20	0.27	97.34	96.56	98.01	100.16	63.57	455.90
08/19/2004 11:30	0.27	97.23	96.41	97.88	100.13	63.51	455.43
08/19/2004 11:40	0.27	96.72	95.85	97.38	100.35	63.50	454.07
08/19/2004 11:50	0.27	97.27	96.57	98.02	100.58	63.51	456.22
08/19/2004 12:00	0.27	97.28	96.48	97.97	100.18	63.54	455.71
08/19/2004 12:10	0.27	96.87	96.11	97.58	99.86	63.55	454.23
08/19/2004 12:20	0.27	97.33	96.53	97.97	100.22	63.55	455.86
08/19/2004 12:30	0.27	96.86	96.07	97.47	99.47	63.59	453.72
08/19/2004 12:40	0.27	97.16	96.36	97.84	99.80	63.52	454.96
08/19/2004 12:50	0.27	96.59	95.84	97.24	99.36	63.58	452.88
08/19/2004 13:00	0.27	96.84	96.03	97.48	99.85	63.54	454.01
						Average	454.61

#NAME? Timestamp	°F 1A AH PRI AIR OUTL TEMP 1D3030.PV - Average	°F 1B AH PRI AIR OUTL TEMP 1D3035.PV - Average	°F SCR 1A OUTLET TMP 1AROT1P06.PV - Average	°F SCR 1B OUTLET TMP 1BROT1P06.PV - Average	INWC 1A AH GAS DIFF PRESS 1D3050.PV - Average	INWC 1B AH GAS DIFF PRESS 1D3055.PV - Average	INWC SCR REACT 1A OUTLET PRES 1N3158.PV - Average	INWC SCR REACT 1B OUTLET PRES 1N3358.PV - Average
08/19/2004 10:40	636.99	658.95	688.73	711.30	6.62	7.09	-10.87	-10.94
08/19/2004 10:50	637.41	659.45	689.01	711.62	6.63	7.10	-10.88	-10.97
08/19/2004 11:00	638.22	659.45	689.38	711.94	6.74	7.21	-11.05	-11.13
08/19/2004 11:10	638.72	660.73	690.35	712.96	6.66	7.14	-10.98	-11.07
08/19/2004 11:20	639.44	661.01	690.89	713.56	6.66	7.15	-10.91	-11.00
08/19/2004 11:30	639.44	661.46	691.07	713.73	6.70	7.18	-11.04	-11.10
08/19/2004 11:40	639.91	661.89	691.36	713.97	6.69	7.19	-11.03	-11.13
08/19/2004 11:50	640.27	662.22	691.72	714.39	6.74	7.23	-11.03	-11.10
08/19/2004 12:00	640.47	662.91	691.84	714.80	6.70	7.20	-11.05	-11.01
08/19/2004 12:10	640.99	662.71	692.21	715.10	6.66	7.13	-11.01	-11.04
08/19/2004 12:20	640.90	663.24	692.35	715.23	6.71	7.20	-11.00	-11.07
08/19/2004 12:30	641.63	663.42	692.52	715.40	6.69	7.17	-10.91	-10.98
08/19/2004 12:40	641.60	663.40	692.70	715.49	6.66	7.17	-10.98	-10.91
08/19/2004 12:50	641.35	663.77	692.75	715.55	6.68	7.18	-10.96	-10.95
08/19/2004 13:00	641.56	663.48	692.79	715.54	6.75	7.25	-11.02	-11.12

AMPS 1B13 RECYC PMP MTR 1P3220.PV - Average	AMPS 1B14 RECYC PMP MTR 1P3230.PV - Average	AMPS 1B15 RECYC PMP MTR 1P3240.PV - Average	AMPS 1B21 RECYC PMP MTR 1P3250.PV - Average	AMPS 1B22 RECYC PMP MTR 1P3260.PV - Average	AMPS 1B23 RECYC PMP MTR 1P3270.PV - Average	AMPS 1B24 RECYC PMP MTR 1P3280.PV - Average	AMPS 1B25 RECYC PMP MTR 1P3290.PV - Average
30.15	31.69	29.26	43.24	0.07	38.43	33.71	24.17
30.13	31.61	29.21	43.24	0.07	38.43	33.66	24.18
30.07	31.63	29.20	43.24	0.07	38.35	33.65	24.13
30.11	31.63	29.25	43.29	0.07	38.36	33.62	24.14
30.15	31.64	29.24	43.22	0.07	38.40	33.63	24.14
30.11	31.68	29.22	43.25	0.07	38.43	33.63	24.16
30.14	31.65	29.20	43.21	0.07	38.35	33.65	24.17
30.13	31.64	29.25	43.32	0.07	38.44	33.69	24.20
30.15	31.65	29.22	43.19	0.07	38.43	33.60	24.19
30.23	31.73	29.27	43.34	0.07	38.49	33.78	24.23
30.21	31.73	29.26	43.30	0.07	38.50	33.71	24.22
30.20	31.68	29.27	43.38	0.07	38.48	33.75	24.21
30.19	31.71	29.28	43.32	0.07	38.45	33.73	24.20
30.18	31.72	29.22	43.36	0.07	38.49	33.70	24.19
30.19	31.70	29.27	43.35	0.07	38.47	33.72	24.20

#NAME? Timestamp	AMPS 1A11 RECYC PMP MTR 1P3100.PV - Average	AMPS 1A12 RECYC PMP MTR 1P3110.PV - Average	AMPS 1A13 RECYC PMP MTR 1P3120.PV - Average	AMPS 1A14 RECYC PMP MTR 1P3130.PV - Average	AMPS 1A15 RECYC PMP MTR 1P3140.PV - Average	AMPS 1A21 RECYC PMP MTR 1P3150.PV - Average	AMPS 1A22 RECYC PMP MTR 1P3160.PV - Average	AMPS 1A23 RECYC PMP MTR 1P3170.PV - Average	AMPS 1A24 RECYC PMP MTR 1P3180.PV - Average	AMPS 1A25 RECYC PMP MTR 1P3190.PV - Average	AMPS 1B12 RECYC PMP MTR 1P3210.PV - Average
08/19/2004 9:40	38.52	32.41	34.37	31.92	33.85	41.33	0.07	37.52	34.79	29.11	33.87
08/19/2004 9:50	38.51	32.42	34.46	31.99	33.84	41.37	0.07	37.50	34.78	29.09	33.85
08/19/2004 10:00	38.50	32.41	34.38	32.00	33.84	41.34	0.07	37.47	34.79	29.04	33.87
08/19/2004 10:10	38.55	32.43	34.39	31.95	33.84	41.30	0.07	37.44	34.76	29.10	33.86
08/19/2004 10:20	38.53	32.43	34.40	31.98	33.86	41.32	0.07	37.45	34.80	29.15	33.92
08/19/2004 10:30	38.53	32.42	34.42	32.01	33.84	41.37	0.07	37.49	34.80	29.14	33.89
08/19/2004 10:40	38.52	32.45	34.42	31.96	33.78	41.34	0.07	37.53	34.91	29.15	33.90
08/19/2004 10:50	38.54	32.43	34.45	31.98	33.85	41.43	0.07	37.56	34.83	29.14	33.88
08/19/2004 11:00	38.53	32.48	34.46	32.01	33.81	41.37	0.07	37.61	34.85	29.11	33.92
08/19/2004 11:10	38.60	32.51	34.47	32.08	33.85	41.43	0.07	37.59	34.89	29.17	33.95
08/19/2004 11:20	38.59	32.49	34.41	32.02	33.85	41.42	0.07	37.54	34.85	29.19	33.95
08/19/2004 11:30	38.56	32.50	34.42	32.04	33.88	41.42	0.07	37.58	34.86	29.18	33.93
08/19/2004 11:40	38.57	32.48	34.41	32.05	33.92	41.51	0.07	37.55	34.90	29.16	33.92
08/19/2004 11:50	38.58	32.48	34.45	32.02	33.94	41.46	0.07	37.55	34.88	29.16	33.90
08/19/2004 12:00	38.55	32.49	34.51	32.09	33.87	41.36	0.07	37.59	34.94	29.17	33.94

#NAME? Timestamp	KPPH 1A NH3 INJ AMMONIA FLOW 1N3132.PV - Average	KPPH 1B NH3 INJ AMMONIA FLOW 1N3332.PV - Average	1A PH CONTROL 1P3006.PV - Average	1B PH CONTROL 1P3010.PV - Average	% 1A RCTN TNK DENSITY 1P3011.PV - Average	% 1B RCTN TNK DENSITY 1P3016.PV - Average
08/19/2004 10:40	272.29	275.95	5.85	5.82	18.93	0.00
08/19/2004 10:50	268.44	270.73	5.86	5.82	18.93	0.00
08/19/2004 11:00	277.91	278.04	5.86	5.82	18.91	0.00
08/19/2004 11:10	275.44	276.76	5.87	5.83	18.90	0.00
08/19/2004 11:20	275.38	279.24	5.87	5.83	18.91	0.00
08/19/2004 11:30	273.70	276.88	5.85	5.84	18.89	0.00
08/19/2004 11:40	278.78	280.19	5.84	5.84	18.88	0.00
08/19/2004 11:50	277.75	281.95	5.83	5.84	18.85	0.00
08/19/2004 12:00	279.35	283.21	5.83	5.84	18.85	0.00
08/19/2004 12:10	274.01	278.85	5.82	5.84	18.85	0.00
08/19/2004 12:20	274.59	276.80	5.82	5.83	18.83	0.00
08/19/2004 12:30	273.10	275.93	5.82	5.82	18.83	0.00
08/19/2004 12:40	275.31	277.20	5.81	5.82	18.84	0.00
08/19/2004 12:50	272.74	276.95	5.79	5.82	18.83	0.00
08/19/2004 13:00	282.76	283.36	5.80	5.81	18.77	0.00

#NAME? Timestamp	PPM 1A INLET NOX GAS ANALYZER 1AONX1N52A.PV - Average	PPM 1B INLET NOX GAS ANALYZER 1BONX1N52A.PV - Average	PPM 1A OUTLET NOX GAS ANALYZER 1AONX1N51A.PV - Average	PPM 1B OUTLET NOX GAS ANALYZER 1BONX1N51A.PV - Average	PPM NOX CONC RAW 1 MIN 1M30014.PV - Average
08/19/2004 10:40	188.42	208.75	19.30	20.94	14.40
08/19/2004 10:50	185.10	204.55	19.56	21.50	13.35
08/19/2004 11:00	188.01	207.09	20.07	21.77	15.21
08/19/2004 11:10	188.10	207.05	19.49	22.10	14.05
08/19/2004 11:20	188.96	208.98	19.48	20.84	15.46
08/19/2004 11:30	186.32	205.17	19.99	21.40	13.90
08/19/2004 11:40	188.59	207.01	20.45	21.78	14.39
08/19/2004 11:50	188.93	207.79	19.75	21.16	14.49
08/19/2004 12:00	189.65	208.80	19.79	21.36	14.94
08/19/2004 12:10	188.40	208.01	19.85	20.86	14.85
08/19/2004 12:20	187.79	205.61	20.36	21.62	15.27
08/19/2004 12:30	187.52	205.38	19.83	21.97	14.39
08/19/2004 12:40	189.00	206.35	19.33	20.58	15.24
08/19/2004 12:50	187.37	205.64	19.19	20.83	14.46
08/19/2004 13:00	190.52	208.99	20.11	22.68	15.64

#NAME? Timestamp	MW GROSS GENERATION MW 1G3000.PV - Average	Klbs/hr FEEDWATER FLOW-TEMP COMP 1F3067.PV - Average	PPM CO2 CONC RAW 1 MIN 1M30015.PV - Average	MSCFH STACK FLOW-1 MIN AVG 1M30057.PV - Average	lbs/MBTU SO2 PPM-LOW RANGE-1 MIN 1M30010.PV - Average	% FLUE GAS OXYGEN 1D3007.PV - Average	PPM NOX CONC RAW 1 MIN 1M30014.PV - Average
08/18/2004 10:30	545.32	4036.96	12.10	67.81	122.97	2.90	13.33
08/18/2004 10:40	547.43	3988.16	12.19	67.99	121.98	2.93	13.90
08/18/2004 10:50	544.13	3994.47	12.18	68.04	125.76	2.99	16.48
08/18/2004 11:00	546.54	4004.07	12.18	68.28	128.17	2.84	16.54
08/18/2004 11:10	547.32	4006.16	12.23	67.97	128.20	2.89	15.29
08/18/2004 11:20	547.32	4005.74	12.20	67.63	127.28	2.94	15.15
08/18/2004 11:30	547.46	3987.97	12.22	67.82	128.61	2.82	14.19
08/18/2004 11:40	547.18	3995.27	12.12	68.43	132.66	2.89	14.73
08/18/2004 11:50	547.43	3999.49	12.03	69.04	132.35	2.87	14.21
08/18/2004 12:00	547.19	3998.16	12.01	68.90	133.39	2.94	15.01
08/18/2004 12:10	547.33	3994.35	12.04	68.82	133.08	2.92	14.83
08/18/2004 12:20	547.33	3998.97	12.02	68.72	131.49	2.88	14.65
08/18/2004 12:30	545.68	3989.87	11.96	68.84	129.00	2.89	13.56
08/18/2004 12:40	544.01	3973.77	12.00	69.15	131.24	2.91	15.11
08/18/2004 12:50	543.88	3972.43	12.02	68.53	128.23	2.82	15.60
08/18/2004 13:00	543.73	3968.32	11.91	69.27	126.03	2.96	15.09
08/18/2004 13:10	547.04	3986.37	11.97	69.31	127.62	2.90	14.58
08/18/2004 13:20	547.06	3996.25	11.96	69.21	128.12	2.86	15.12
08/18/2004 13:30	547.16	3995.30	11.90	69.78	128.70	2.97	15.03
08/18/2004 13:40	547.09	4000.85	11.94	69.41	131.51	2.86	14.52
08/18/2004 13:50	547.12	3995.49	12.00	69.02	148.72	2.92	15.72
08/18/2004 14:00	545.26	3962.81	11.89	69.11	155.72	3.00	15.13
08/18/2004 14:10	544.04	3981.96	11.96	68.65	155.95	2.88	14.77
08/18/2004 14:20	543.74	3968.39	12.07	68.96	155.99	2.93	18.20
08/18/2004 14:30	543.28	3994.21	11.97	69.16	147.52	2.73	14.87
08/18/2004 14:40	542.96	4001.79	11.77	70.08	138.78	2.92	17.90
08/18/2004 14:50	543.79	3964.43	11.85	70.34	135.51	3.19	16.12
08/18/2004 15:00	535.19	4054.68	11.78	68.57	122.65	2.76	14.75
08/18/2004 15:10	538.85	4017.56	11.79	68.56	120.21	2.98	15.71
08/18/2004 15:20	544.79	4082.25	11.90	69.04	123.49	2.99	18.23
08/18/2004 15:30	543.79	4072.46	11.96	68.68	125.71	2.89	17.00
08/18/2004 15:40	545.28	4080.73	11.99	69.31	129.35	2.95	17.28
08/18/2004 15:50	543.83	4072.71	11.93	69.02	129.80	2.87	17.51
08/18/2004 16:00	541.21	4041.23	11.92	69.21	130.34	2.92	17.67
08/18/2004 16:10	543.70	4049.84	11.96	68.83	130.98	2.94	16.78
08/18/2004 16:20	544.69	4057.32	11.99	68.77	132.19	2.88	16.88
08/18/2004 16:30	544.09	4054.16	11.99	69.07	131.87	2.92	17.90
08/18/2004 16:40	544.38	4043.40	12.01	68.85	132.42	2.85	16.09
08/18/2004 16:50	544.11	4044.25	11.98	68.90	132.43	2.92	17.19
08/18/2004 17:00	544.28	4033.92	12.01	69.00	133.92	2.91	16.64
08/18/2004 17:10	544.26	4033.06	12.02	69.18	134.48	2.91	16.36
08/18/2004 17:20	545.55	4035.76	12.07	69.00	134.52	2.85	15.17
08/18/2004 17:30	545.45	4037.98	11.99	69.36	133.79	2.97	17.52
08/18/2004 17:40	544.12	4029.81	12.02	68.93	133.96	2.83	17.02
08/18/2004 17:50	544.17	4021.85	12.01	69.21	132.93	2.83	17.07
08/18/2004 18:00	543.69	4034.28	11.92	69.58	130.28	2.92	16.81

#NAME? Timestamp	KPPH A FDR COAL FLOW 1C3400.pv - Average	KPPH B FDR COAL FLOW 1C3410.Pv - Average	KPPH C FDR COAL FLOW 1C3420.Pv - Average	KPPH D FDR COAL FLOW 1C3430.Pv - Average	KPPH E FDR COAL FLOW 1C3440.Pv - Average	KPPH F FDR COAL FLOW 1C3450.Pv - Average	KPPH Total COAL FLOW
08/18/2004 10:30	0.25	97.33	96.56	97.82	97.85	62.30	452.11
08/18/2004 10:40	0.25	94.11	93.33	94.67	94.73	69.65	446.74
08/18/2004 10:50	0.26	97.31	96.52	97.75	97.94	69.66	459.44
08/18/2004 11:00	0.25	96.48	95.81	97.05	97.14	69.68	456.41
08/18/2004 11:10	0.26	96.09	95.32	96.59	96.92	69.64	454.81
08/18/2004 11:20	0.26	96.02	95.21	96.54	96.72	69.66	454.40
08/18/2004 11:30	0.26	95.69	94.96	96.24	96.80	69.69	453.65
08/18/2004 11:40	0.26	95.71	94.91	96.22	96.96	69.69	453.75
08/18/2004 11:50	0.26	95.79	95.02	96.30	96.69	69.67	453.73
08/18/2004 12:00	0.26	95.44	94.61	95.94	96.41	69.64	452.30
08/18/2004 12:10	0.26	95.45	94.68	95.90	96.26	69.65	452.21
08/18/2004 12:20	0.26	95.99	95.18	96.46	96.74	69.66	454.29
08/18/2004 12:30	0.26	95.00	94.31	95.57	95.82	69.67	450.64
08/18/2004 12:40	0.26	94.80	94.08	95.34	95.84	69.69	450.01
08/18/2004 12:50	0.26	94.88	94.18	95.42	95.94	69.71	450.39
08/18/2004 13:00	0.26	95.55	94.73	96.09	96.37	69.68	452.69
						Average	452.97

#NAME? Timestamp	KPPH A FDR COAL FLOW 1C3400.pv - Average	KPPH B FDR COAL FLOW 1C3410.Pv - Average	KPPH C FDR COAL FLOW 1C3420.Pv - Average	KPPH D FDR COAL FLOW 1C3430.Pv - Average	KPPH E FDR COAL FLOW 1C3440.Pv - Average	KPPH F FDR COAL FLOW 1C3450.Pv - Average	KPPH Total COAL FLOW
08/18/2004 15:30	0.27	111.80	89.60	90.90	91.99	69.65	454.20
08/18/2004 15:40	0.27	113.45	88.83	90.03	91.24	69.69	453.52
08/18/2004 15:50	0.27	117.57	87.39	88.60	89.64	69.66	453.13
08/18/2004 16:00	0.27	117.60	85.99	87.26	88.36	69.72	449.19
08/18/2004 16:10	0.27	117.57	87.90	89.28	90.29	69.71	455.02
08/18/2004 16:20	0.27	117.53	87.77	89.05	90.14	69.64	454.40
08/18/2004 16:30	0.27	117.54	88.45	89.74	90.90	69.66	456.55
08/18/2004 16:40	0.27	117.62	87.50	88.83	90.04	69.64	453.90
08/18/2004 16:50	0.27	117.58	88.47	89.76	90.97	69.66	456.71
08/18/2004 17:00	0.27	117.48	87.91	89.15	90.51	69.66	454.97
08/18/2004 17:10	0.27	117.56	88.41	89.78	90.67	69.63	456.31
08/18/2004 17:20	0.27	117.57	88.46	89.80	90.78	69.67	456.55
08/18/2004 17:30	0.27	117.61	88.09	89.39	90.27	69.66	455.29
08/18/2004 17:40	0.27	117.58	88.34	89.65	90.70	69.62	456.15
08/18/2004 17:50	0.27	117.59	87.27	88.59	90.28	69.61	453.60
08/18/2004 18:00	0.27	117.61	88.38	89.75	91.82	66.41	454.23
						Average	454.61

#NAME? Timestamp	°F 1A AH PRI AIR OUTL TEMP 1D3030.PV - Average	°F 1B AH PRI AIR OUTL TEMP 1D3035.PV - Average	°F SCR 1A OUTLET TMP 1AROT1P05.PV - Average	°F SCR 1B OUTLET TMP 1BROT1P06.PV - Average	INWC 1A AH GAS DIFF PRESS 1D3050.PV - Average	INWC 1B AH GAS DIFF PRESS 1D3055.PV - Average	INWC SCR REACT 1A OUTLET PRES 1N3158.PV - Average	INWC SCR REACT 1B OUTLET PRES 1N3358.PV - Average
08/18/2004 10:30	636.79	655.83	691.29	710.55	6.64	7.10	-10.82	-11.00
08/18/2004 10:40	639.32	656.68	691.54	710.05	6.62	7.04	-10.89	-11.09
08/18/2004 10:50	640.70	657.20	691.99	709.99	6.52	7.05	-10.73	-10.82
08/18/2004 11:00	641.36	656.82	692.32	710.00	6.57	7.12	-10.95	-11.05
08/18/2004 11:10	641.14	657.72	692.92	710.55	6.55	7.04	-10.81	-10.90
08/18/2004 11:20	641.80	657.58	693.11	710.85	6.55	6.99	-10.80	-10.99
08/18/2004 11:30	642.08	658.54	693.17	711.17	6.49	6.96	-10.74	-10.88
08/18/2004 11:40	641.55	658.73	693.39	711.52	6.57	7.07	-10.85	-11.01
08/18/2004 11:50	641.98	659.34	693.51	712.00	6.65	7.11	-11.00	-11.18
08/18/2004 12:00	642.20	659.99	694.09	712.75	6.58	7.04	-10.90	-11.08
08/18/2004 12:10	642.61	660.35	694.48	713.14	6.59	7.05	-10.88	-11.06
08/18/2004 12:20	643.23	660.59	694.65	713.43	6.62	7.09	-10.95	-11.13
08/18/2004 12:30	643.31	660.46	694.81	713.53	6.68	7.14	-10.97	-11.11
08/18/2004 12:40	643.35	660.57	694.80	713.30	6.60	7.07	-10.93	-11.09
08/18/2004 12:50	643.67	660.62	694.92	713.47	6.60	7.07	-10.86	-11.01
08/18/2004 13:00	643.39	661.01	694.95	713.54	6.69	7.20	-11.05	-11.22
08/18/2004 13:10	643.68	661.18	695.47	713.94	6.69	7.17	-11.05	-11.21
08/18/2004 13:20	644.48	662.18	696.19	714.70	6.75	7.23	-11.08	-11.24
08/18/2004 13:30	644.88	662.85	696.79	715.39	6.79	7.27	-11.18	-11.32
08/18/2004 13:40	645.62	663.54	697.41	716.07	6.77	7.26	-11.15	-11.31
08/18/2004 13:50	645.80	663.68	697.67	716.33	6.77	7.26	-11.13	-11.26
08/18/2004 14:00	645.92	663.68	697.80	716.36	6.76	7.25	-11.09	-11.24
08/18/2004 14:10	646.07	663.77	697.63	716.20	6.68	7.16	-10.95	-11.07
08/18/2004 14:20	645.77	663.22	697.24	715.91	6.71	7.21	-11.13	-11.29
08/18/2004 14:30	645.99	663.56	697.32	716.10	6.81	7.32	-11.16	-11.31
08/18/2004 14:40	645.66	663.60	697.67	716.47	6.94	7.45	-11.37	-11.54
08/18/2004 14:50	647.34	665.12	699.03	717.82	6.76	7.22	-11.25	-11.42
08/18/2004 15:00	646.03	663.52	698.09	716.70	6.71	7.20	-10.89	-11.06
08/18/2004 15:10	644.10	660.98	695.40	713.47	6.71	7.19	-10.87	-11.05
08/18/2004 15:20	642.76	660.12	693.91	711.94	6.68	7.17	-10.96	-11.15
08/18/2004 15:30	643.12	660.01	693.77	711.91	6.69	7.17	-10.88	-11.05
08/18/2004 15:40	642.89	660.35	693.84	712.04	6.72	7.23	-10.99	-11.12
08/18/2004 15:50	643.58	660.38	694.04	712.40	6.72	7.21	-10.94	-11.10
08/18/2004 16:00	643.53	660.64	693.93	712.57	6.63	7.10	-10.91	-11.10
08/18/2004 16:10	642.69	660.58	693.56	712.50	6.73	7.19	-10.91	-11.12
08/18/2004 16:20	643.64	660.80	693.88	712.89	6.64	7.14	-10.89	-11.07
08/18/2004 16:30	644.48	661.43	694.29	713.29	6.74	7.22	-10.91	-11.07
08/18/2004 16:40	644.80	661.57	694.49	713.48	6.65	7.13	-10.85	-10.98
08/18/2004 16:50	644.30	661.85	694.68	713.44	6.69	7.18	-10.89	-11.05
08/18/2004 17:00	644.08	662.05	695.04	713.70	6.68	7.17	-10.94	-11.03
08/18/2004 17:10	644.25	662.34	695.33	713.93	6.72	7.21	-10.91	-11.01
08/18/2004 17:20	644.31	662.84	695.49	714.09	6.65	7.15	-10.90	-10.98
08/18/2004 17:30	644.91	663.13	695.77	714.46	6.73	7.25	-11.04	-11.13
08/18/2004 17:40	645.05	663.79	696.27	714.92	6.65	7.15	-10.89	-10.95
08/18/2004 17:50	645.08	663.44	696.28	714.93	6.71	7.21	-10.95	-11.02
08/18/2004 18:00	645.47	663.49	696.50	714.99	6.74	7.26	-11.06	-11.14

#NAME? Timestamp	AMPS 1A11 RECYC PMP MTR 1P3100.PV - Average	AMPS 1A12 RECYC PMP MTR 1P3110.PV - Average	AMPS 1A13 RECYC PMP MTR 1P3120.PV - Average	AMPS 1A14 RECYC PMP MTR 1P3130.PV - Average	AMPS 1A15 RECYC PMP MTR 1P3140.PV - Average	AMPS 1A21 RECYC PMP MTR 1P3150.PV - Average	AMPS 1A22 RECYC PMP MTR 1P3160.PV - Average	AMPS 1A23 RECYC PMP MTR 1P3170.PV - Average	AMPS 1A24 RECYC PMP MTR 1P3180.PV - Average	AMPS 1A25 RECYC PMP MTR 1P3190.PV - Average	AMPS 1B12 RECYC PMP MTR 1P3210.PV - Average
08/18/2004 10:30	38.36	32.36	34.38	31.92	33.76	41.32	0.07	37.39	34.68	29.07	33.96
08/18/2004 10:40	38.35	32.34	34.33	31.89	33.79	41.21	0.07	37.38	34.68	29.05	33.95
08/18/2004 10:50	38.36	32.33	34.29	31.89	33.70	41.24	0.07	37.35	34.65	29.06	33.96
08/18/2004 11:00	38.39	32.33	34.26	31.89	33.75	41.25	0.07	37.33	34.64	29.05	33.95
08/18/2004 11:10	38.39	32.33	34.38	31.94	33.86	41.29	0.07	37.39	34.75	29.07	33.98
08/18/2004 11:20	38.43	32.34	34.39	31.92	33.70	41.29	0.07	37.40	34.70	29.07	33.96
08/18/2004 11:30	38.37	32.33	34.39	31.87	33.77	41.25	0.08	37.41	34.72	29.04	33.95
08/18/2004 11:40	38.37	32.33	34.40	31.93	33.83	41.24	0.07	37.42	34.70	29.09	33.94
08/18/2004 11:50	38.40	32.33	34.34	31.97	33.83	41.29	0.08	37.39	34.70	29.07	33.96
08/18/2004 12:00	38.36	32.37	34.38	31.94	33.84	41.30	0.07	37.46	34.74	29.10	33.99
08/18/2004 12:10	38.42	32.37	34.36	31.94	33.86	41.30	0.07	37.43	34.80	29.11	34.00
08/18/2004 12:20	38.40	32.38	34.34	31.94	33.91	41.33	0.07	37.49	34.76	29.10	34.00
08/18/2004 12:30	38.43	32.35	34.37	31.98	33.83	41.33	0.07	37.49	34.71	29.10	33.95
08/18/2004 12:40	38.41	32.36	34.38	31.94	33.82	41.26	0.07	37.42	34.75	29.10	33.98
08/18/2004 12:50	38.42	32.37	34.40	31.93	33.78	41.29	0.07	37.45	34.78	29.10	33.92
08/18/2004 13:00	38.43	32.40	34.39	31.94	33.81	41.27	0.07	37.49	34.76	29.11	33.93
08/18/2004 13:10	38.42	32.39	34.47	31.97	33.83	41.34	0.07	37.45	34.80	29.16	33.94
08/18/2004 13:20	38.45	32.42	34.42	32.03	33.88	41.38	0.07	37.54	34.80	29.14	33.99
08/18/2004 13:30	38.43	32.43	34.45	32.01	33.93	41.36	0.07	37.50	34.79	29.14	34.00
08/18/2004 13:40	38.43	32.43	34.43	31.94	33.79	41.39	0.07	37.52	34.74	29.16	34.00
08/18/2004 13:50	38.37	32.39	34.46	31.97	33.82	41.29	0.07	37.49	34.73	29.14	33.99
08/18/2004 14:00	38.43	32.41	34.37	32.01	33.92	41.35	0.07	37.50	34.78	29.19	33.99
08/18/2004 14:10	38.49	32.43	34.50	31.97	33.91	41.35	0.07	37.52	34.80	29.16	33.98
08/18/2004 14:20	38.50	32.40	34.47	32.01	33.88	41.40	0.07	37.52	34.78	29.19	34.00
08/18/2004 14:30	38.48	32.43	34.40	32.02	33.86	41.38	0.07	37.54	34.77	29.18	34.00
08/18/2004 14:40	38.52	32.44	34.53	32.03	33.99	41.40	0.07	37.59	34.83	29.20	33.97
08/18/2004 14:50	38.54	32.45	34.45	32.02	33.94	41.40	0.07	37.53	34.84	29.22	34.01
08/18/2004 15:00	38.50	32.44	34.43	32.01	33.92	41.37	0.07	37.55	34.86	29.17	34.05
08/18/2004 15:10	38.48	32.41	34.48	32.05	33.91	41.32	0.07	37.53	34.73	29.16	33.95
08/18/2004 15:20	38.46	32.37	34.39	32.02	33.89	41.33	0.07	37.50	34.82	29.15	33.94
08/18/2004 15:30	38.50	32.42	34.44	32.00	33.88	41.35	0.07	37.56	34.78	29.19	33.99
08/18/2004 15:40	38.46	32.38	34.41	31.99	33.88	41.34	0.07	37.51	34.78	29.16	33.96
08/18/2004 15:50	38.44	32.38	34.39	32.05	33.90	41.33	0.07	37.51	34.78	29.12	33.94
08/18/2004 16:00	38.51	32.39	34.52	32.00	33.85	41.31	0.07	37.53	34.79	29.14	33.99
08/18/2004 16:10	38.52	32.43	34.49	32.07	33.86	41.38	0.07	37.59	34.84	29.13	33.94
08/18/2004 16:20	38.49	32.44	34.47	32.01	33.84	41.37	0.07	37.53	34.76	29.16	33.95
08/18/2004 16:30	38.51	32.43	34.48	32.06	33.87	41.32	0.08	37.58	34.81	29.18	33.96
08/18/2004 16:40	38.54	32.46	34.49	32.04	33.92	41.37	0.07	37.54	34.83	29.17	33.93
08/18/2004 16:50	38.52	32.45	34.44	32.03	33.89	41.36	0.07	37.56	34.83	29.16	33.94
08/18/2004 17:00	38.52	32.45	34.46	32.03	33.92	41.36	0.07	37.55	34.84	29.19	33.97
08/18/2004 17:10	38.51	32.41	34.46	32.03	34.05	41.35	0.07	37.52	34.76	29.15	33.94
08/18/2004 17:20	38.50	32.41	34.45	31.99	33.90	41.33	0.07	37.53	34.80	29.14	33.96
08/18/2004 17:30	38.52	32.40	34.52	31.96	33.88	41.35	0.07	37.49	34.78	29.13	33.94
08/18/2004 17:40	38.51	32.41	34.42	31.95	33.88	41.39	0.07	37.56	34.82	29.14	33.97
08/18/2004 17:50	38.52	32.44	34.46	32.00	33.95	41.36	0.07	37.57	34.76	29.19	33.98
08/18/2004 18:00	38.54	32.47	34.45	32.05	33.98	41.47	0.07	37.57	34.87	29.20	34.01

AMPS 1B13 RECYC PMP MTR 1P3220.PV - Average	AMPS 1B14 RECYC PMP MTR 1P3230.PV - Average	AMPS 1B15 RECYC PMP MTR 1P3240.PV - Average	AMPS 1B21 RECYC PMP MTR 1P3250.PV - Average	AMPS 1B22 RECYC PMP MTR 1P3260.PV - Average	AMPS 1B23 RECYC PMP MTR 1P3270.PV - Average	AMPS 1B24 RECYC PMP MTR 1P3280.PV - Average	AMPS 1B25 RECYC PMP MTR 1P3290.PV - Average
30.22	31.75	29.34	43.36	0.07	38.49	33.76	24.24
30.26	31.73	29.26	43.42	0.07	38.55	33.80	24.24
30.21	31.75	29.32	43.40	0.08	38.45	33.74	24.22
30.24	31.76	29.30	43.45	0.07	38.57	33.77	24.25
30.26	31.79	29.29	43.44	0.07	38.50	33.77	24.25
30.24	31.79	29.30	43.40	0.07	38.54	33.74	24.25
30.26	31.82	29.30	43.44	0.08	38.58	33.75	24.25
30.24	31.72	29.31	43.43	0.07	38.51	33.78	24.25
30.23	31.77	29.31	43.38	0.07	38.48	33.77	24.23
30.28	31.80	29.33	43.40	0.07	38.60	33.75	24.25
30.23	31.77	29.36	43.40	0.07	38.58	33.79	24.27
30.23	31.83	29.34	43.47	0.07	38.57	33.81	24.27
30.20	31.76	29.31	43.43	0.07	38.56	33.76	24.26
30.20	31.73	29.29	43.40	0.07	38.57	33.73	24.25
30.22	31.75	29.29	43.43	0.07	38.53	33.78	24.25
30.18	31.79	29.35	43.40	0.07	38.49	33.77	24.26
30.21	31.73	29.34	43.42	0.07	38.60	33.82	24.28
30.26	31.75	29.38	43.45	0.07	38.58	33.80	24.29
30.26	31.77	29.38	43.44	0.07	38.57	33.79	24.29
30.24	31.74	29.36	43.48	0.07	38.64	33.81	24.36
30.23	31.77	29.32	43.48	0.07	38.55	33.79	24.34
30.23	31.77	29.36	43.46	0.07	38.62	33.79	24.33
30.25	31.85	29.36	43.48	0.07	38.59	33.83	24.34
30.27	31.80	29.37	43.54	0.07	38.67	33.78	24.36
30.24	31.79	29.38	43.48	0.07	38.60	33.83	24.36
30.27	31.82	29.35	43.49	0.07	38.67	33.81	24.34
30.28	31.83	29.42	43.53	0.07	38.65	33.84	24.36
30.27	31.81	29.37	43.44	0.07	38.65	33.83	24.36
30.24	31.82	29.34	43.39	0.07	38.53	33.76	24.35
30.20	31.75	29.32	43.43	0.07	38.53	33.81	24.29
30.26	31.79	29.30	43.47	0.07	38.55	33.77	24.27
30.20	31.71	29.29	43.42	0.07	38.48	33.77	24.24
30.25	31.74	29.32	43.38	0.07	38.51	33.75	24.25
30.23	31.77	29.34	43.39	0.07	38.59	33.77	24.26
30.25	31.76	29.38	43.44	0.07	38.59	33.80	24.28
30.24	31.77	29.36	43.46	0.07	38.57	33.78	24.28
30.26	31.80	29.37	43.47	0.08	38.62	33.75	24.29
30.27	31.78	29.40	43.43	0.07	38.60	33.79	24.29
30.23	31.80	29.32	43.45	0.07	38.64	33.81	24.28
30.27	31.78	29.35	43.42	0.07	38.59	33.81	24.30
30.23	31.81	29.33	43.43	0.07	38.57	33.83	24.26
30.24	31.72	29.31	43.41	0.07	38.56	33.72	24.26
30.25	31.72	29.29	43.38	0.07	38.55	33.75	24.26
30.25	31.76	29.30	43.37	0.07	38.50	33.79	24.26
30.29	31.73	29.35	43.35	0.07	38.50	33.72	24.26
30.28	31.79	29.36	43.51	0.07	38.60	33.79	24.33

#NAME? Timestamp	KPPH 1A NH3 INJ AMMONIA FLOW 1N3132.PV - Average	KPPH 1B NH3 INJ AMMONIA FLOW 1N3332.PV - Average	1A PH CONTROL 1P3008.PV - Average	1B PH CONTROL 1P3010.PV - Average	% 1A RCTN TNK DENSITY 1P3011.PV - Average	% 1B RCTN TNK DENSITY 1P3016.PV - Average
08/18/2004 10:30	262.49	271.75	5.79	5.84	19.30	0.00
08/18/2004 10:40	263.29	266.16	5.77	5.85	19.32	0.00
08/18/2004 10:50	257.61	266.83	5.75	5.85	19.31	0.00
08/18/2004 11:00	262.34	264.62	5.75	5.82	19.32	0.00
08/18/2004 11:10	264.71	265.51	5.75	5.82	19.35	0.00
08/18/2004 11:20	270.53	267.23	5.78	5.81	19.32	0.00
08/18/2004 11:30	268.92	266.25	5.80	5.79	19.30	0.00
08/18/2004 11:40	271.21	269.66	5.82	5.80	19.25	0.00
08/18/2004 11:50	277.16	275.12	5.83	5.78	19.23	0.00
08/18/2004 12:00	277.02	275.37	5.84	5.79	19.27	0.00
08/18/2004 12:10	276.58	274.66	5.84	5.80	19.32	0.00
08/18/2004 12:20	273.57	272.25	5.85	5.81	19.32	0.00
08/18/2004 12:30	272.41	273.87	5.85	5.82	19.29	0.00
08/18/2004 12:40	274.68	271.99	5.86	5.83	19.29	0.00
08/18/2004 12:50	275.26	273.28	5.86	5.84	19.26	0.00
08/18/2004 13:00	280.64	273.01	5.87	5.84	19.21	0.00
08/18/2004 13:10	278.69	275.95	5.86	5.85	19.19	0.00
08/18/2004 13:20	280.48	276.93	5.86	5.85	19.18	0.00
08/18/2004 13:30	285.50	279.39	5.85	5.83	19.14	0.00
08/18/2004 13:40	279.99	275.55	6.39	5.83	19.11	0.00
08/18/2004 13:50	283.17	278.77	6.65	5.77	19.07	0.00
08/18/2004 14:00	280.94	276.61	6.09	5.75	19.07	0.00
08/18/2004 14:10	273.77	271.77	5.61	5.80	19.07	0.00
08/18/2004 14:20	277.48	276.68	5.49	5.84	19.05	0.00
08/18/2004 14:30	278.44	268.60	5.56	5.86	19.00	0.00
08/18/2004 14:40	290.91	279.29	5.65	5.88	18.98	0.00
08/18/2004 14:50	279.54	274.26	5.72	5.88	18.96	0.00
08/18/2004 15:00	258.51	254.43	5.82	5.88	18.93	0.00
08/18/2004 15:10	260.78	246.69	5.88	5.85	18.93	0.00
08/18/2004 15:20	270.17	269.82	5.92	5.82	18.92	0.00
08/18/2004 15:30	268.41	269.36	5.93	5.79	18.91	0.00
08/18/2004 15:40	270.51	270.06	5.93	5.78	18.86	0.00
08/18/2004 15:50	271.71	270.58	5.93	5.79	18.85	0.00
08/18/2004 16:00	271.42	275.43	5.91	5.80	18.81	0.00
08/18/2004 16:10	274.52	271.60	5.88	5.80	18.85	0.00
08/18/2004 16:20	269.77	275.89	5.86	5.81	18.82	0.00
08/18/2004 16:30	270.31	276.83	5.83	5.81	18.79	0.00
08/18/2004 16:40	267.50	272.48	5.80	5.82	18.77	0.00
08/18/2004 16:50	270.54	278.98	5.78	5.82	18.80	0.00
08/18/2004 17:00	269.68	276.76	5.76	5.83	18.83	0.00
08/18/2004 17:10	271.52	277.10	5.74	5.83	18.84	0.00
08/18/2004 17:20	270.04	274.30	5.74	5.84	18.77	0.00
08/18/2004 17:30	276.57	277.38	5.75	5.83	18.72	0.00
08/18/2004 17:40	273.52	274.88	5.79	5.83	18.71	0.00
08/18/2004 17:50	273.68	278.11	5.81	5.83	18.75	0.00
08/18/2004 18:00	280.88	277.46	5.82	5.83	18.71	0.00

#NAME? Timestamp	PPM 1A INLET NOX GAS ANALYZER 1AONX1N52A.PV - Average	PPM 1B INLET NOX GAS ANALYZER 1BONX1N52A.PV - Average	PPM 1A OUTLET NOX GAS ANALYZER 1AONX1N51A.PV - Average	PPM 1B OUTLET NOX GAS ANALYZER 1BONX1N51A.PV - Average	PPM NOX CONC RAW 1 MIN 1M30014.PV - Average
08/18/2004 10:30	183.93	204.47	19.06	18.21	13.33
08/18/2004 10:40	182.55	198.83	20.54	21.67	13.90
08/18/2004 10:50	182.97	201.84	20.78	21.01	16.48
08/18/2004 11:00	182.47	198.85	21.35	21.24	16.54
08/18/2004 11:10	182.78	199.45	20.27	21.40	15.29
08/18/2004 11:20	184.81	199.67	21.15	22.95	15.15
08/18/2004 11:30	185.07	198.83	18.92	20.21	14.19
08/18/2004 11:40	186.15	199.61	19.37	21.73	14.73
08/18/2004 11:50	187.07	201.32	20.84	22.65	14.21
08/18/2004 12:00	189.20	202.58	20.02	22.13	15.01
08/18/2004 12:10	189.24	202.50	19.51	21.75	14.83
08/18/2004 12:20	187.22	201.02	20.47	21.44	14.65
08/18/2004 12:30	185.41	200.12	20.19	21.73	13.56
08/18/2004 12:40	188.51	201.58	21.65	23.49	15.11
08/18/2004 12:50	188.14	202.08	19.32	20.60	15.60
08/18/2004 13:00	189.11	198.65	20.61	24.87	15.09
08/18/2004 13:10	190.16	202.85	19.91	22.56	14.58
08/18/2004 13:20	190.52	202.70	20.37	21.85	15.12
08/18/2004 13:30	190.56	202.26	21.12	25.03	15.03
08/18/2004 13:40	189.56	201.15	20.05	22.01	14.52
08/18/2004 13:50	190.22	203.71	19.77	22.29	15.72
08/18/2004 14:00	189.28	200.79	21.40	25.56	15.13
08/18/2004 14:10	188.22	201.15	19.36	21.79	14.77
08/18/2004 14:20	189.44	203.56	22.46	25.56	18.20
08/18/2004 14:30	186.84	196.38	21.39	23.23	14.87
08/18/2004 14:40	192.08	200.17	20.67	27.85	17.90
08/18/2004 14:50	191.40	200.22	20.16	23.71	16.12
08/18/2004 15:00	179.74	190.25	22.35	20.56	14.75
08/18/2004 15:10	179.00	182.65	21.21	27.56	15.71
08/18/2004 15:20	183.19	196.24	20.59	26.39	18.23
08/18/2004 15:30	184.08	198.79	20.67	24.86	17.00
08/18/2004 15:40	185.32	199.09	22.51	27.06	17.28
08/18/2004 15:50	185.91	199.24	21.16	25.34	17.51
08/18/2004 16:00	186.19	201.87	20.33	24.73	17.67
08/18/2004 16:10	185.52	199.22	22.29	26.88	16.78
08/18/2004 16:20	185.65	202.82	20.11	24.76	16.88
08/18/2004 16:30	185.42	203.74	21.25	26.11	17.90
08/18/2004 16:40	183.12	200.70	19.66	23.67	16.09
08/18/2004 16:50	184.61	204.12	20.22	30.42	17.19
08/18/2004 17:00	185.59	202.21	20.75	24.60	16.64
08/18/2004 17:10	185.02	203.54	20.31	24.83	16.36
08/18/2004 17:20	184.41	201.35	20.47	23.79	15.17
08/18/2004 17:30	186.98	202.85	22.11	27.33	17.52
08/18/2004 17:40	187.54	201.95	20.68	25.85	17.02
08/18/2004 17:50	185.77	201.58	20.62	25.35	17.07
08/18/2004 18:00	188.46	200.55	21.04	25.66	16.81

#NAME?	MW	Klbs/hr	PPM	MSCFH	lbs/MBTU	%	PPM
	GROSS GENERATION MW	FEEDWATER FLOW-TEMP COMP	CO2 CONC RAW 1 MIN	STACK FLOW-1 MIN AVG	SO2 PPM-LOW RANGE-1 MIN	FLUE GAS OXYGEN	NOX CONC RAW 1 MIN
Timestamp	1G3000.PV - Average	1F3087.PV - Average	1M30015.PV - Average	1M30057.PV - Average	1M30010.PV - Average	1D3007.PV - Average	1M30014.PV - Average
08/17/2004 13:00	547.06	4016.86	12.28	67.41	118.12	2.91	14.49
08/17/2004 13:10	547.25	3986.04	12.26	67.60	114.85	2.87	14.63
08/17/2004 13:20	547.22	3979.84	12.22	67.79	113.76	2.89	15.01
08/17/2004 13:30	546.91	4010.26	12.24	67.44	113.41	2.87	15.62
08/17/2004 13:40	547.22	4012.64	12.19	67.75	111.63	2.92	15.19
08/17/2004 13:50	547.12	3994.50	12.19	67.69	111.67	2.89	15.09
08/17/2004 14:00	547.28	3969.40	12.17	67.86	114.29	2.89	15.18
08/17/2004 14:10	547.11	3988.99	12.16	67.83	116.39	2.90	15.18
08/17/2004 14:20	547.29	4023.50	12.13	68.16	116.06	2.86	15.34
08/17/2004 14:30	546.20	4008.18	12.11	68.16	116.96	2.92	15.28
08/17/2004 14:40	545.93	3971.71	12.15	67.86	116.71	2.86	15.31
08/17/2004 14:50	545.74	3992.95	12.06	68.12	117.36	2.95	15.77
08/17/2004 15:00	545.92	3990.18	12.09	67.69	118.63	2.92	14.07
08/17/2004 15:10	545.68	3963.13	12.08	68.04	120.80	2.93	15.49
08/17/2004 15:20	545.37	3984.97	12.15	67.70	123.60	2.89	16.18
08/17/2004 15:30	545.75	3979.97	12.10	67.92	124.15	2.85	15.53

#NAME? Timestamp	KPPH A FDR COAL FLOW 1C3400.pv - Average	KPPH B FDR COAL FLOW 1C3410.Pv - Average	KPPH C FDR COAL FLOW 1C3420.Pv - Average	KPPH D FDR COAL FLOW 1C3430.Pv - Average	KPPH E FDR COAL FLOW 1C3440.Pv - Average	KPPH F FDR COAL FLOW 1C3450.Pv - Average	KPPH Total COAL FLOW
08/17/2004 13:00	0.26	97.84	97.14	98.41	98.45	63.38	455.48
08/17/2004 13:10	0.26	97.78	97.10	98.34	98.45	63.41	455.34
08/17/2004 13:20	0.26	97.32	96.60	97.91	98.00	63.37	453.46
08/17/2004 13:30	0.26	97.55	96.76	98.06	98.15	63.38	454.17
08/17/2004 13:40	0.26	97.54	96.75	98.07	98.17	63.39	454.17
08/17/2004 13:50	0.26	97.88	97.07	98.44	98.49	63.36	455.50
08/17/2004 14:00	0.26	97.95	97.24	98.52	98.55	63.38	455.89
08/17/2004 14:10	0.26	97.48	96.72	98.00	98.11	63.39	453.97
08/17/2004 14:20	0.26	97.34	96.55	97.87	97.92	63.39	453.34
08/17/2004 14:30	0.26	97.52	96.69	98.07	98.05	63.40	453.99
08/17/2004 14:40	0.26	97.34	96.57	97.88	97.84	63.39	453.28
08/17/2004 14:50	0.26	98.07	97.18	98.53	98.54	63.38	455.95
08/17/2004 15:00	0.26	97.54	96.83	98.16	98.17	63.37	454.34
08/17/2004 15:10	0.26	96.79	95.93	97.32	97.33	63.36	450.99
08/17/2004 15:20	0.26	97.87	97.05	98.43	98.46	63.33	455.41
08/17/2004 15:30	0.26	97.23	96.35	97.70	97.67	63.35	452.57

#NAME? Timestamp	°F 1A AH PRI AIR OUTL TEMP 1D3030.PV - Average	°F 1B AH PRI AIR OUTL TEMP 1D3035.PV - Average	°F SCR 1A OUTLET TMP 1AROT1P06.PV - Average	°F SCR 1B OUTLET TMP 1BROT1P06.PV - Average	INWC 1A AH GAS DIFF PRESS 1D3050.PV - Average	INWC 1B AH GAS DIFF PRESS 1D3055.PV - Average	INWC SCR REACT 1A OUTLET PRES 1N3158.PV - Average	INWC SCR REACT 1B OUTLET PRES 1N3358.PV - Average
08/17/2004 13:00	637.03	655.66	687.96	708.18	6.45	6.93	-10.74	-10.72
08/17/2004 13:10	636.75	656.20	688.23	708.39	6.47	6.96	-10.74	-10.81
08/17/2004 13:20	637.51	655.98	688.60	708.68	6.48	6.97	-10.77	-10.81
08/17/2004 13:30	637.51	656.31	688.88	708.84	6.45	6.95	-10.74	-10.81
08/17/2004 13:40	637.79	656.29	689.17	709.01	6.49	6.98	-10.80	-10.84
08/17/2004 13:50	637.72	656.58	689.52	709.30	6.36	7.03	-10.79	-10.91
08/17/2004 14:00	637.79	657.37	689.83	709.66	5.54	7.04	-10.87	-11.00
08/17/2004 14:10	638.37	657.33	690.10	710.13	6.53	7.04	-10.82	-10.92
08/17/2004 14:20	638.74	657.69	690.35	710.45	6.55	7.06	-10.88	-10.98
08/17/2004 14:30	639.04	657.83	690.73	710.60	6.51	7.04	-10.90	-11.00
08/17/2004 14:40	639.36	657.63	691.05	710.64	5.91	7.08	-10.85	-10.96
08/17/2004 14:50	639.55	658.11	691.30	710.78	6.63	7.11	-10.95	-11.02
08/17/2004 15:00	640.03	658.33	691.75	711.20	6.59	7.07	-10.86	-10.97
08/17/2004 15:10	639.92	658.29	691.71	711.10	6.30	7.01	-10.86	-10.95
08/17/2004 15:20	639.93	658.39	691.68	711.01	6.54	7.05	-10.82	-10.90
08/17/2004 15:30	640.06	658.36	691.73	711.13	6.58	7.08	-10.88	-10.95

#NAME? Timestamp	AMPS 1A11 RECYC PMP MTR 1P3100.PV - Average	AMPS 1A12 RECYC PMP MTR 1P3110.PV - Average	AMPS 1A13 RECYC PMP MTR 1P3120.PV - Average	AMPS 1A14 RECYC PMP MTR 1P3130.PV - Average	AMPS 1A15 RECYC PMP MTR 1P3140.PV - Average	AMPS 1A21 RECYC PMP MTR 1P3150.PV - Average	AMPS 1A22 RECYC PMP MTR 1P3160.PV - Average	AMPS 1A23 RECYC PMP MTR 1P3170.PV - Average	AMPS 1A24 RECYC PMP MTR 1P3180.PV - Average	AMPS 1A25 RECYC PMP MTR 1P3190.PV - Average	AMPS 1B12 RECYC PMP MTR 1P3210.PV - Average
08/17/2004 13:00	38.44	32.24	34.26	31.86	33.75	41.14	0.07	37.27	34.60	29.00	33.80
08/17/2004 13:10	38.48	32.20	34.40	31.87	33.73	41.12	0.07	37.29	34.62	28.98	33.82
08/17/2004 13:20	38.49	32.23	34.21	31.83	33.68	41.13	0.07	37.32	34.60	28.98	33.74
08/17/2004 13:30	38.52	32.25	34.22	31.86	33.70	41.14	0.07	37.29	34.61	29.02	33.77
08/17/2004 13:40	38.48	32.26	34.33	31.92	33.74	41.14	0.07	37.32	34.60	29.03	33.77
08/17/2004 13:50	38.48	32.27	34.26	31.84	33.74	41.13	0.07	37.30	34.61	29.01	33.77
08/17/2004 14:00	38.51	32.28	34.33	31.94	33.76	41.22	0.07	37.32	34.58	29.02	33.82
08/17/2004 14:10	38.56	32.34	34.37	31.98	33.75	41.24	0.07	37.40	34.68	29.07	33.81
08/17/2004 14:20	38.51	32.35	34.37	31.98	33.82	41.19	0.08	37.40	34.63	29.06	33.82
08/17/2004 14:30	38.54	32.35	34.33	31.95	33.74	41.22	0.07	37.34	34.65	29.07	33.85
08/17/2004 14:40	38.55	32.35	34.38	31.95	33.74	41.21	0.07	37.37	34.65	29.04	33.85
08/17/2004 14:50	38.59	32.35	34.33	31.94	33.75	41.18	0.08	37.30	34.70	29.10	33.84
08/17/2004 15:00	38.56	32.34	34.39	31.92	33.77	41.17	0.08	37.38	34.65	29.08	33.87
08/17/2004 15:10	38.58	32.36	34.36	31.95	33.84	41.24	0.07	37.40	34.69	29.10	33.91
08/17/2004 15:20	38.60	32.37	34.31	31.92	33.75	41.22	0.07	37.37	34.67	29.08	33.88
08/17/2004 15:30	38.62	32.40	34.32	31.98	33.76	41.24	0.08	37.40	34.68	29.10	33.89

AMPS 1B13 RECYC PMP MTR 1P3220.PV - Average	AMPS 1B14 RECYC PMP MTR 1P3230.PV - Average	AMPS 1B15 RECYC PMP MTR 1P3240.PV - Average	AMPS 1B21 RECYC PMP MTR 1P3250.PV - Average	AMPS 1B22 RECYC PMP MTR 1P3260.PV - Average	AMPS 1B23 RECYC PMP MTR 1P3270.PV - Average	AMPS 1B24 RECYC PMP MTR 1P3280.PV - Average	AMPS 1B25 RECYC PMP MTR 1P3290.PV - Average
30.08	31.67	29.26	43.29	0.08	38.49	33.66	24.17
30.09	31.69	29.23	43.26	0.07	38.47	33.69	24.18
30.08	31.65	29.26	43.28	0.07	38.44	33.69	24.17
30.12	31.66	29.30	43.28	0.07	38.39	33.65	24.19
30.12	31.67	29.23	43.41	0.07	38.48	33.66	24.21
30.12	31.65	29.25	43.26	0.07	38.55	33.67	24.23
30.12	31.76	29.30	43.31	0.07	38.47	33.67	24.22
30.17	31.71	29.30	43.36	0.07	38.50	33.72	24.24
30.18	31.73	29.31	43.38	0.08	38.58	33.74	24.25
30.17	31.76	29.34	43.34	0.07	38.47	33.69	24.26
30.16	31.75	29.35	43.42	0.07	38.51	33.70	24.26
30.19	31.76	29.34	43.43	0.08	38.54	33.76	24.27
30.19	31.73	29.30	43.42	0.07	38.58	33.77	24.27
30.21	31.73	29.32	43.38	0.07	38.57	33.77	24.26
30.20	31.77	29.33	43.46	0.08	38.60	33.72	24.28
30.21	31.72	29.33	43.46	0.08	38.47	33.77	24.27

#NAME? Timestamp	KPPH 1A NH3 INJ AMMONIA FLOW 1N3132.PV - Average	KPPH 1B NH3 INJ AMMONIA FLOW 1N3332.PV - Average	1A PH CONTROL 1P3006.PV - Average	1B PH CONTROL 1P3010.PV - Average	% 1A RCTN TNK DENSITY 1P3011.PV - Average	% 1B RCTN TNK DENSITY 1P3016.PV - Average
08/17/2004 13:00	277.50	277.33	5.81	5.84	19.06	0.00
08/17/2004 13:10	278.62	278.62	5.84	5.85	19.06	0.00
08/17/2004 13:20	279.18	277.09	5.87	5.84	19.05	0.00
08/17/2004 13:30	278.92	277.90	5.89	5.83	19.05	0.00
08/17/2004 13:40	282.42	281.16	5.90	5.82	19.02	0.00
08/17/2004 13:50	280.27	282.86	5.91	5.81	19.00	0.00
08/17/2004 14:00	285.07	283.88	5.91	5.81	18.97	0.00
08/17/2004 14:10	283.13	284.94	5.90	5.82	18.92	0.00
08/17/2004 14:20	282.44	287.71	5.88	5.82	18.89	0.00
08/17/2004 14:30	284.85	286.45	5.86	5.83	18.88	0.00
08/17/2004 14:40	283.46	288.78	5.84	5.83	18.84	0.00
08/17/2004 14:50	288.52	292.91	5.82	5.83	18.84	0.00
08/17/2004 15:00	284.44	287.79	5.80	5.84	18.82	0.00
08/17/2004 15:10	281.88	285.29	5.77	5.84	18.84	0.00
08/17/2004 15:20	283.42	285.91	5.75	5.83	18.81	0.00
08/17/2004 15:30	283.99	286.54	5.74	5.82	18.83	0.00

#NAME? Timestamp	PPM 1A INLET NOX GAS ANALYZER 1AONX1N52A.PV - Average	PPM 1B INLET NOX GAS ANALYZER 1BONX1N52A.PV - Average	PPM 1A OUTLET NOX GAS ANALYZER 1AONX1N51A.PV - Average	PPM 1B OUTLET NOX GAS ANALYZER 1BONX1N51A.PV - Average	PPM NOX CONC RAW 1 MIN 1M30014.PV - Average
08/17/2004 13:00	193.88	213.51	19.49	20.92	14.49
08/17/2004 13:10	192.19	214.49	20.08	20.81	14.63
08/17/2004 13:20	191.76	212.27	19.72	22.16	15.01
08/17/2004 13:30	192.05	212.21	19.11	21.81	15.62
08/17/2004 13:40	191.31	211.93	19.85	22.72	15.19
08/17/2004 13:50	191.74	213.11	19.10	21.72	15.09
08/17/2004 14:00	193.82	213.28	20.09	21.70	15.18
08/17/2004 14:10	193.23	213.56	19.80	22.22	15.18
08/17/2004 14:20	192.04	215.38	19.99	20.71	15.34
08/17/2004 14:30	192.43	214.29	21.39	22.56	15.28
08/17/2004 14:40	193.25	217.48	19.94	19.92	15.31
08/17/2004 14:50	193.95	218.69	20.52	22.46	15.77
08/17/2004 15:00	192.94	217.21	19.92	21.09	14.07
08/17/2004 15:10	193.34	217.18	20.91	20.74	15.49
08/17/2004 15:20	194.02	217.09	20.49	21.35	16.18
08/17/2004 15:30	192.91	216.92	21.07	21.70	15.53

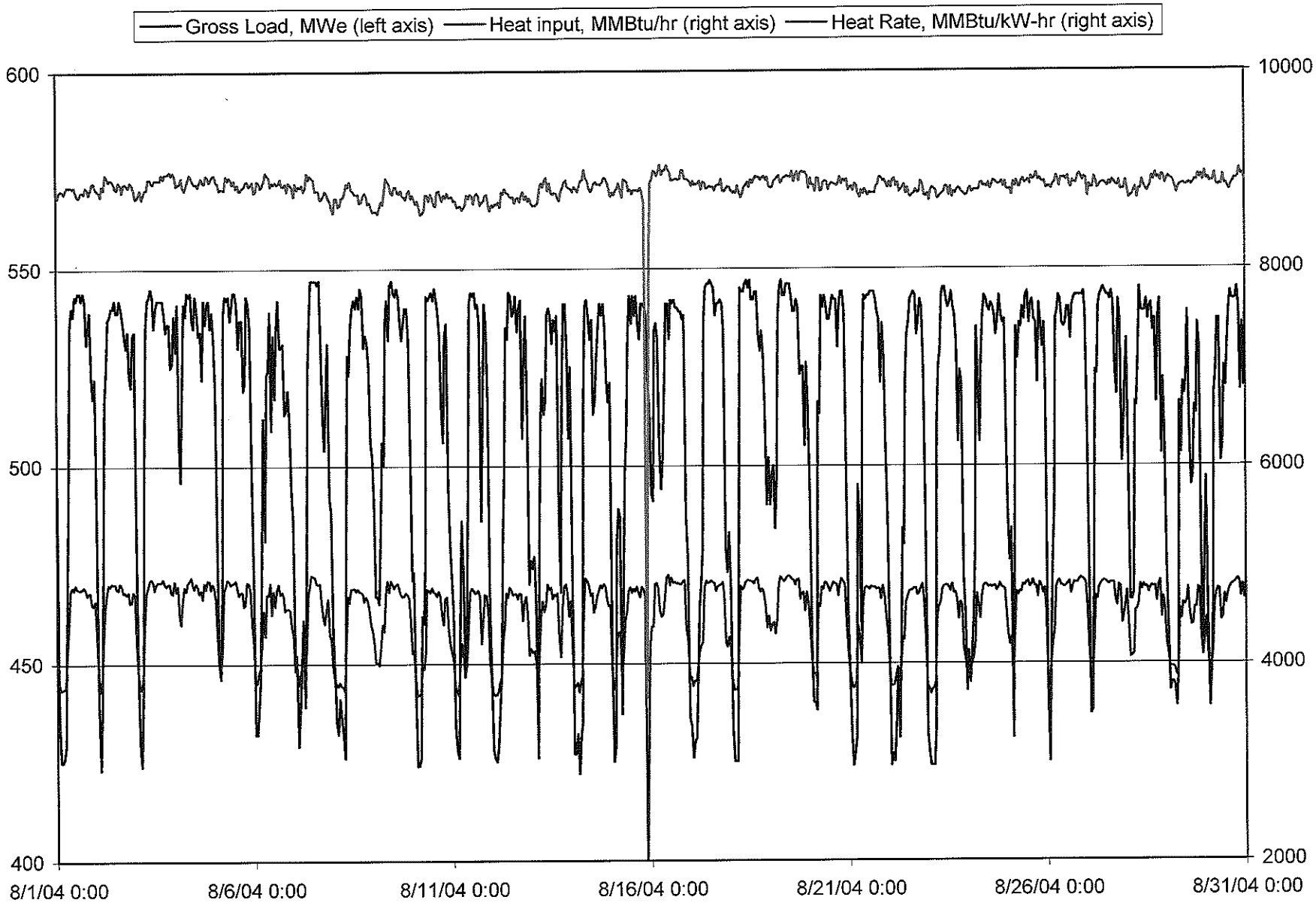
Gross Load, MWe (left axis)
Heat input, MMBtu/hr (right axis)
Heat Rate, MMBtu/kW-hr (right axis)
600
550
500
450
400
10000
8000
6000
4000
2000
8/1/04 0:00
8/6/04 0:00
8/11/04 0:00
8/16/04 0:00
8/21/04 0:00
8/26/04 0:00
8/31/04 0:00

Date	Hour	Unit operating time	Gross Load, MWe	Load Range	Hourly Heat input, MMBtu/hr	Formula	F-Factor for Heat Input Calculation
11/05/2004	10	1	547	10	4690.7	501	1800
11/05/2004	11	1	546	10	4596.5	501	1800
11/05/2004	12	1	547	10	4544.4	501	1800
11/05/2004	13	1	547	10	4595.7	501	1800
11/05/2004	14	1	547	10	4646.5	501	1800
11/05/2004	15	1	547	10	4651.8	501	1800
11/05/2004	16	1	547	10	4648.2	501	1800
11/05/2004	17	1	547	10	4510.9	501	1800
11/05/2004	18	1	546	10	4713.1	501	1800

Date	Hour	% Monitor availability	Avg. Vol. Flow Rate, scfh	Avg. Bias-Adjusted Vol. Flow Rate, scfh
11/04/2005	10	100	65535000	68091000
11/04/2005	11	100	65271000	67817000
11/04/2005	12	100	66159000	68739000
11/04/2005	13	100	66906000	69515000
11/04/2005	14	100	67645000	70283000
11/04/2005	15	100	67722000	70363000
11/04/2005	16	100	67670000	70309000
11/04/2005	17	100	67369000	69996000
11/04/2005	18	100	68043000	70697000

	Gen. (MW)	Heat Input (mm Btu)	Flow (ACFH)	SO2Conc (ppm)	SO2Mass (lb)	NOxMass (lb)	NOxRate (lb/MM Btu)	CO2Conc (vol. %)	CO2Mass (ton)
11/5/2004 09:20-11:49	546.8	4,638.3	68,296,750	125.4	1,421.1	1,512.3	0.326	12.2	475.9
11/5/2004 12:52-15:19	547.0	4,617.3	69,841,800	106.6	1,235.9	1,532.9	0.332	11.9	473.7
11/5/2004 15:50-18:10	545.6	4,657.4	70,327,400	97.2	1,134.1	1,483.6	0.318	11.9	477.9

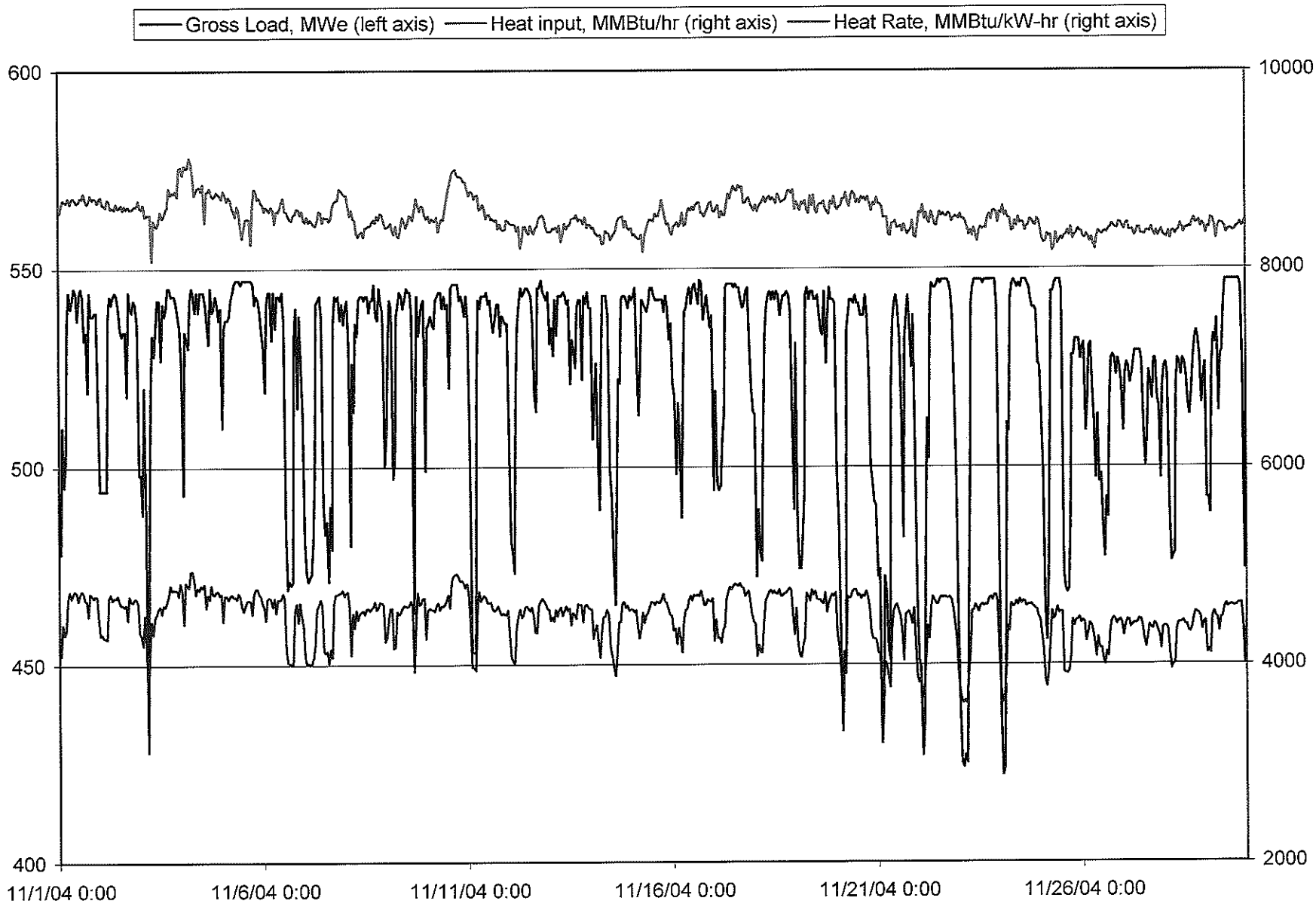
Gross Load, MWe (left axis)
Heat input, MMBtu/hr (right axis)
Heat Rate, MMBtu/kW-hr (right axis)
600
550
500
450
400
10000
8000
6000
4000
2000
11/1/04 0:00
11/6/04 0:00
11/11/04 0:00
11/16/04 0:00
11/21/04 0:00
11/26/04 0:00

APPENDIX C

Flue Gas Mercury Data

- Summary of Ontario-Hydro Impinger Analyses Data Sheets
- Recovery Data Sheets

Distribution: Witham - Loche
Project No.: 1621-87
Sample Date: 8-17-04

Location: SCRI Task: _____ Test: 1 Operator: Jeff

Sample ID	Bottle #	Description	Initial Vol mL	Rinse Vol mL	Gain mL	Final Vol mL	ppb Hg	Total ug of Hg
	S	Filter/Solids						
1	1A	Probe & Filter Rinse				84		
2	1B	Heated Line Rinse				78		
3	2	KCl Impingers	300	150	86	536		
4	3	HNO_3/H_2O_2 Impinger	100	75	0	175		
5	4	$KMnO_4$ Impingers	200	50	-1	249		
6	5	$KMnO_4$ Acid Rinse		100		100		

Filter Gross wt: 8.6419 g
Filter Tare wt: 1.4214 g
Filter Net wt: 7.2205 g

Filter Net wt: 7.2205 g
Probe/Line Rinse wt: .0644 g
Total Particulate wt: 7.2849 g

Condensate Total: 92.2 ml

Recovered By: Jm

Date: 8-17-04

Location: SCRO Task: _____ Test: 1 Operator: Thom

Sample ID	Bottle #	Description	Initial Vol mL	Rinse Vol mL	Gain mL	Final Vol mL	ppb Hg	Total ug of Hg
	S	Filter/Solids						
7	1A	Probe & Filter Rinse				96		
8	1B	Heated Line Rinse				83		
9	2	KCl Impingers	300	150	89	539		
10	3	HNO_3/H_2O_2 Impinger	100	75	-1	174		
11	4	$KMnO_4$ Impingers	200	50	-2	248		
12	5	$KMnO_4$ Acid Rinse		100		100		

Filter Gross wt: 16.1803 g
Filter Tare wt: 2.9398 g
Filter Net wt: 13.2405 g

Filter Net wt: 13.2405 g
Probe/Line Rinse wt: .0174 g
Total Particulate wt: 13.2579 g

Condensate Total: 92.7 ml

Recovered By: Jm

Date: 8-17-04

Location: AHO Task: _____ Test: 1 Operator: Jim

Sample ID	Bottle #	Description	Initial Vol mL	Rinse Vol mL	Gain mL	Final Vol mL	ppb Hg	Total ug of Hg
	S	Filter/Solids						
13	1A	Probe & Filter Rinse				99		
14	1B	Heated Line Rinse				141		
15	2	KCl Impingers	300	150	81	531		
16	3	HNO_3/H_2O_2 Impinger	100	75	2	177		
17	4	$KMnO_4$ Impingers	200	50	-2	248		
18	5	$KMnO_4$ Acid Rinse		100		100		

Filter Gross wt: 9.6230 g
Filter Tare wt: 1.3171 g
Filter Net wt: 8.3059 g

Filter Net wt: 8.3059 g
Probe/Line Rinse wt: 0.0820 g
Total Particulate wt: 8.3879 g

Condensate Total: 87.7 ml

Recovered By: Jm

Date: 8-17-04

Location: FGD Task: _____ Test: 1 Operator: Gary

Sample ID	Bottle #	Description	Initial Vol mL	Rinse Vol mL	Gain mL	Final Vol mL	ppb Hg	Total ug of Hg
	S	Filter/Solids						
19	1A	Probe & Filter Rinse				151		
20	1B	Heated Line Rinse				71		
21	2	KCl Impingers	300	150	148	598		
22	3	HNO_3/H_2O_2 Impinger	100	75	18	193		
23	4	$KMnO_4$ Impingers	200	50	-18	232		
24	5	$KMnO_4$ Acid Rinse		100		100		

Filter Gross wt: 0.2769 g Filter Net wt: 0.1265 g
Filter Tare wt: 0.1504 g Probe/Line Rinse wt: 0 g Condensate Total: 169.4 ml
Filter Net wt: 0.1265 g Total Particulate wt: 0.1265 g

Recovered By: Jr Date: 8-17-04

Location: Blank Imp. Task: _____ Test: 2 Operator: Jerri

Sample ID	Bottle #	Description	Initial Vol mL	Rinse Vol mL	Gain mL	Final Vol mL	ppb Hg	Total ug of Hg
	S	Filter/Solids						
	1A	Probe & Filter Rinse						
	1B	Heated Line Rinse						
30	2	KCl Impingers	300	150	0	450		
31	3	HNO_3/H_2O_2 Impinger	100	75	0	175		
32	4	$KMnO_4$ Impingers	200	50	0	250		
33	5	$KMnO_4$ Acid Rinse		100		100		

Filter Gross wt: _____ g Filter Net wt: _____ g
Filter Tare wt: _____ g Probe/Line Rinse wt: _____ g Condensate Total: 0 ml
Filter Net wt: _____ g Total Particulate wt: _____ g

Recovered By: Jr Date: 8-18-04

Location: STK Task: _____ Test: 1 Operator: Bruce

Sample ID	Bottle #	Description	Initial Vol mL	Rinse Vol mL	Gain mL	Final Vol mL	ppb Hg	Total ug of Hg
	S	Filter/Solids						
25	1A	Probe & Filter Rinse				160		
—	1B	Heated Line Rinse						
26	2	KCl Impingers	300	150	370	820		
27	3	HNO_3/H_2O_2 Impinger	100	75	4	179		
28	4	$KMnO_4$ Impingers	200	50	-1	249		
29	5	$KMnO_4$ Acid Rinse		100		100		

Filter Gross wt: 0.7590 g Filter Net wt: 0.3515 g
Filter Tare wt: 0.4075 g Probe/Line Rinse wt: 0.0122 g Condensate Total: 391.2 ml
Filter Net wt: 0.3515 g Total Particulate wt: 0.3637 g

Recovered By: Jr Date: 8-17-04

Sample ID	Description	ppb Hg	Total ug of Hg
	3 in. Filter Blank		
	Thimble Blank		
34	KCl Blank		
35	HNO_3 / H2O2 Blank		
36	$KMnO_4$ Blank		
37	HNO_3 / HCl Blank		

Distribution: Witham - Locke
Project No.: 1621-87
Sample Date: 8-18-04

Location: SCRI Task: _____ Test: 2 Operator: Jeff

Sample ID	Bottle #	Description	Initial Vol mL	Rinse Vol mL	Gain mL	Final Vol mL	ppb Hg	Total ug of Hg
	S	Filter/Solids						
38	1A	Probe & Filter Rinse				55		
39	1B	Heated Line Rinse				61		
40	2	KCl Impingers	300	150	89	539		
41	3	HNO_3/H_2O_2 Impinger	100	75	0	175		
42	4	$KMnO_4$ Impingers	200	50	-3	247		
43	5	$KMnO_4$ Acid Rinse		100		100		

Filter Gross wt: 11.1243 g
Filter Tare wt: 1.4777 g
Filter Net wt: 9.6466 g

Filter Net wt: 9.6466 g
Probe/Line Rinse wt: 0.0657 g
Total Particulate wt: 9.7123 g

Condensate Total: 93.7 ml

Recovered By: Jr

Date: 8-18-04

Location: SCRO Task: _____ Test: 2 Operator: Thom

Sample ID	Bottle #	Description	Initial Vol mL	Rinse Vol mL	Gain mL	Final Vol mL	ppb Hg	Total ug of Hg
	S	Filter/Solids						
44	1A	Probe & Filter Rinse				63		
45	1B	Heated Line Rinse				86		
46	2	KCl Impingers	300	150	111	561		
47	3	HNO_3/H_2O_2 Impinger	100	75	-1	174		
48	4	$KMnO_4$ Impingers	200	50	-5	245		
49	5	$KMnO_4$ Acid Rinse		100		100		

Filter Gross wt: 16.5974 g
Filter Tare wt: 2.8998 g
Filter Net wt: 13.6976 g

Filter Net wt: 13.6976 g
Probe/Line Rinse wt: 0 g
Total Particulate wt: 13.6973 g

Condensate Total: 115.8 ml

Recovered By: Jr

Date: 8-18-04

Location: AHO Task: _____ Test: 2 Operator: Jesse

Sample ID	Bottle #	Description	Initial Vol mL	Rinse Vol mL	Gain mL	Final Vol mL	ppb Hg	Total ug of Hg
	S	Filter/Solids						
50	1A	Probe & Filter Rinse				126		
51	1B	Heated Line Rinse				107		
52	2	KCl Impingers	300	150	85	535		
53	3	HNO_3/H_2O_2 Impinger	100	75	-2	173		
54	4	$KMnO_4$ Impingers	200	50	-3	247		
55	5	$KMnO_4$ Acid Rinse		100		100		

Filter Gross wt: 7.9412 g
Filter Tare wt: 1.1638 g
Filter Net wt: 6.7774 g

Filter Net wt: 6.7774 g
Probe/Line Rinse wt: 1.0767 g
Total Particulate wt: 7.8541 g

Condensate Total: 86.5 ml

Recovered By: Jr

Date: 8-18-04

Location: FGD Task: _____ Test: 2 Operator: Gary

Sample ID	Bottle #	Description	Initial Vol mL	Rinse Vol mL	Gain mL	Final Vol mL	ppb Hg	Total ug of Hg
	S	Filter/Solids						
56	1A	Probe & Filter Rinse				138		
57	1B	Heated Line Rinse				81		
58	2	KCl Impingers	300	150	158	608		
59	3	HNO_3/H_2O_2 Impinger	100	75	-2	173		
60	4	$KMnO_4$ Impingers	200	50	-3	247		
61	5	$KMnO_4$ Acid Rinse		100		100		

Filter Gross wt: 0.4394 g Filter Net wt: 0.2894 g
Filter Tare wt: 0.1500 g Probe/Line Rinse wt: 0 g Condensate Total: 178.6 ml
Filter Net wt: 0.2894 g Total Particulate wt: 0.2894 g

Recovered By: Jim Date: 8-18-04

Location: RV Task: _____ Test: 3 Operator: Jim

Sample ID	Bottle #	Description	Initial Vol mL	Rinse Vol mL	Gain mL	Final Vol mL	ppb Hg	Total ug of Hg
	S	Filter/Solids						
67	1A	Probe & Filter Rinse				93		
—	1B	Heated Line Rinse						
68	2	KCl Impingers	300	150	351	801		
69	3	HNO_3/H_2O_2 Impinger	100	75	0	175		
70	4	$KMnO_4$ Impingers	200	50	-3	247		
71	5	$KMnO_4$ Acid Rinse		100		100		

Filter Gross wt: _____ g Filter Net wt: _____ g
Filter Tare wt: _____ g Probe/Line Rinse wt: _____ g Condensate Total: 363.0 ml
Filter Net wt: _____ g Total Particulate wt: _____ g

Recovered By: Jim Date: 8-18-04

Location: STK Task: _____ Test: 2 Operator: Bruce

Sample ID	Bottle #	Description	Initial Vol mL	Rinse Vol mL	Gain mL	Final Vol mL	ppb Hg	Total ug of Hg
	S	Filter/Solids						
62	1A	Probe & Filter Rinse				127		
—	1B	Heated Line Rinse						
63	2	KCl Impingers	300	150	364	814		
64	3	HNO_3/H_2O_2 Impinger	100	75	15	190		
65	4	$KMnO_4$ Impingers	200	50	-1	249		
66	5	$KMnO_4$ Acid Rinse		100		100		

Filter Gross wt: 0.7421 g Filter Net wt: 0.3286 g
Filter Tare wt: 0.4135 g Probe/Line Rinse wt: 0 g Condensate Total: 396.4 ml
Filter Net wt: 0.3286 g Total Particulate wt: 0.3286 g

Recovered By: Jim Date: 8-18-04

Sample ID	Description	ppb Hg	Total ug of Hg
	3 in. Filter Blank		
	Thimble Blank		
72	KCl Blank		
	HNO_3 / H2O2 Blank		
	$KMnO_4$ Blank		
	HNO_3 / HCl Blank		

Distribution: Kitchum - Locke
Project No.: 1621-87
Sample Date: 8-18-04

Location: SCRI Task: _____ Test: 3 Operator: Jeff

Sample ID	Bottle #	Description	Initial Vol mL	Rinse Vol mL	Gain mL	Final Vol mL	ppb Hg	Total ug of Hg
	S	Filter/Solids						
73	1A	Probe & Filter Rinse				55		
74	1B	Heated Line Rinse				55		
75	2	KCl Impingers	300	150	90	540		
76	3	HNO_3/H_2O_2 Impinger	100	75	0	175		
77	4	$KMnO_4$ Impingers	200	50	0	250		
78	5	$KMnO_4$ Acid Rinse		100		100		

Filter Gross wt: 10.0814 g
Filter Tare wt: 1.3592 g
Filter Net wt: 8.7222 g

Filter Net wt: 8.7222 g
Probe/Line Rinse wt: 0 g
Total Particulate wt: 8.7222 g

Condensate Total: 97.8 ml

Recovered By: Jr

Date: 8-18-04

Location: SCRO Task: _____ Test: 3 Operator: Ron

Sample ID	Bottle #	Description	Initial Vol mL	Rinse Vol mL	Gain mL	Final Vol mL	ppb Hg	Total ug of Hg
	S	Filter/Solids						
79	1A	Probe & Filter Rinse				124		
80	1B	Heated Line Rinse				91		
81	2	KCl Impingers	300	150	102	552		
82	3	HNO_3/H_2O_2 Impinger	100	75	0	175		
83	4	$KMnO_4$ Impingers	200	50	-2	248		
84	5	$KMnO_4$ Acid Rinse		100		100		

Filter Gross wt: 14.7172 g
Filter Tare wt: 2.4836 g
Filter Net wt: 12.2336 g

Filter Net wt: 12.2336 g
Probe/Line Rinse wt: 0.0213 g
Total Particulate wt: 12.2549 g

Condensate Total: 1071.2 ml

Recovered By: Jr

Date: 8-18-04

Location: AHO Task: _____ Test: 3 Operator: Jim

Sample ID	Bottle #	Description	Initial Vol mL	Rinse Vol mL	Gain mL	Final Vol mL	ppb Hg	Total ug of Hg
	S	Filter/Solids						
85	1A	Probe & Filter Rinse				121		
86	1B	Heated Line Rinse				98		
87	2	KCl Impingers	300	150	97	547		
88	3	HNO_3/H_2O_2 Impinger	100	75	0	175		
89	4	$KMnO_4$ Impingers	200	50	0	250		
90	5	$KMnO_4$ Acid Rinse		100		100		

Filter Gross wt: 8.8538 g
Filter Tare wt: 1.2321 g
Filter Net wt: 7.6217 g

Filter Net wt: 7.6217 g
Probe/Line Rinse wt: 0 g
Total Particulate wt: 7.6217 g

Condensate Total: 103.9 ml

Recovered By: Jr

Date: 8-18-04

Location: FGD Task: _____ Test: 3 Operator: Gary

Sample ID	Bottle #	Description	Initial Vol mL	Rinse Vol mL	Gain mL	Final Vol mL	ppb Hg	Total ug of Hg
	S	Filter/Solids						
91	1A	Probe & Filter Rinse				116		
92	1B	Heated Line Rinse				67		
93	2	KCl Impingers	300	150	165	415		
94	3	HNO_3/H_2O_2 Impinger	100	75	1	176		
95	4	$KMnO_4$ Impingers	200	50	0	250		
96	5	$KMnO_4$ Acid Rinse		100		100		

Filter Gross wt: 0.3373 g Filter Net wt: 0.1877 g
Filter Tare wt: 0.1496 g Probe/Line Rinse wt: 0.0058 g Condensate Total: 190.8 ml
Filter Net wt: 0.1877 g Total Particulate wt: 0.1935 g

Recovered By: Jm Date: 8-18-04

Location: RV Task: _____ Test: Operator:

Sample ID	Bottle #	Description	Initial Vol mL	Rinse Vol mL	Gain mL	Final Vol mL	ppb Hg	Total ug of Hg
	S	Filter/Solids						
	1A	Probe & Filter Rinse						
	1B	Heated Line Rinse						
	2	KCl Impingers						
	3	HNO_3/H_2O_2 Impinger						
	4	$KMnO_4$ Impingers						
	5	$KMnO_4$ Acid Rinse						

Filter Gross wt: _____ g Filter Net wt: _____ g
Filter Tare wt: _____ g Probe/Line Rinse wt: _____ g Condensate Total: _____ ml
Filter Net wt: _____ g Total Particulate wt: _____ g

Recovered By: _____ Date: _____

Location: STK Task: _____ Test: 3 Operator: Bruce

Sample ID	Bottle #	Description	Initial Vol mL	Rinse Vol mL	Gain mL	Final Vol mL	ppb Hg	Total ug of Hg
	S	Filter/Solids						
97	1A	Probe & Filter Rinse				163		
—	1B	Heated Line Rinse						
98	2	KCl Impingers	300	150	387	837		
99	3	HNO_3/H_2O_2 Impinger	100	75	6	181		
100	4	$KMnO_4$ Impingers	200	50	-2	248		
101	5	$KMnO_4$ Acid Rinse		100		100		

Filter Gross wt: 0.6842 g Filter Net wt: 0.2716 g
Filter Tare wt: 0.4126 g Probe/Line Rinse wt: 0 g Condensate Total: 409.5 ml
Filter Net wt: 0.2716 g Total Particulate wt: 0.2716 g

Recovered By: Jm Date: 8-18-04

Sample ID	Description	ppb Hg	Total ug of Hg
	3 in. Filter Blank		
	Thimble Blank		
102	KCl Blank		
	HNO_3 / H2O2 Blank		
	$KMnO_4$ Blank		
	HNO_3 / HCl Blank		

Distribution: Witham - Locke
Project No.: 1621 - 87
Sample Date: 8-19-04

Location: SCRI Task: _____ Test: 4 Operator: Jeff

Sample ID	Bottle #	Description	Initial Vol mL	Rinse Vol mL	Gain mL	Final Vol mL	ppb Hg	Total ug of Hg
	S	Filter/Solids						
103	1A	Probe & Filter Rinse				46		
104	1B	Heated Line Rinse				68		
105	2	KCl Impingers	300	150	89	539		
106	3	HNO_3/H_2O_2 Impinger	100	75	0	175		
107	4	$KMnO_4$ Impingers	200	50	-1	249		
108	5	$KMnO_4$ Acid Rinse		100		100		

Filter Gross wt: 9.5815 g
Filter Tare wt: 1.4730 g
Filter Net wt: 8.1085 g

Filter Net wt: 8.1085 g
Probe/Line Rinse wt: 0 g
Total Particulate wt: 8.1085 g

Condensate Total: 94.8 ml

Recovered By: Jn

Date: 8-19-04

Location: SCRO Task: _____ Test: 4 Operator: Ron

Sample ID	Bottle #	Description	Initial Vol mL	Rinse Vol mL	Gain mL	Final Vol mL	ppb Hg	Total ug of Hg
	S	Filter/Solids						
109	1A	Probe & Filter Rinse				74		
110	1B	Heated Line Rinse				114		
111	2	KCl Impingers	300	150	118	568		
112	3	HNO_3/H_2O_2 Impinger	100	75	-1	174		
113	4	$KMnO_4$ Impingers	200	50	-3	247		
114	5	$KMnO_4$ Acid Rinse		100		100		

Filter Gross wt: 17.0739 g
Filter Tare wt: 3.2387 g
Filter Net wt: 13.8352 g

Filter Net wt: 13.8352 g
Probe/Line Rinse wt: 0.0062 g
Total Particulate wt: 13.8414 g

Condensate Total: 125.4 ml

Recovered By: Jn

Date: 8-19-04

Location: AHO Task: _____ Test: 4 Operator: Jim

Sample ID	Bottle #	Description	Initial Vol mL	Rinse Vol mL	Gain mL	Final Vol mL	ppb Hg	Total ug of Hg
	S	Filter/Solids						
115	1A	Probe & Filter Rinse				131		
116	1B	Heated Line Rinse				182		
117	2	KCl Impingers	300	150	94	544		
118	3	HNO_3/H_2O_2 Impinger	100	75	0	175		
119	4	$KMnO_4$ Impingers	200	50	0	250		
120	5	$KMnO_4$ Acid Rinse		100		100		

Filter Gross wt: 9.8413 g
Filter Tare wt: 1.2779 g
Filter Net wt: 8.5634 g

Filter Net wt: 8.5634 g
Probe/Line Rinse wt: 0 g
Total Particulate wt: 8.5634 g

Condensate Total: 101.0 ml

Recovered By: Jn

Date: 8-19-04

Location: FGD Task: _____ Test: 4 Operator: Gary

Sample ID	Bottle #	Description	Initial Vol mL	Rinse Vol mL	Gain mL	Final Vol mL	ppb Hg	Total ug of Hg
	S	Filter/Solids						
121	1A	Probe & Filter Rinse				155		
122	1B	Heated Line Rinse				106		
123	2	KCl Impingers	300	150	159	609		
124	3	HNO_3/H_2O_2 Impinger	100	75	1	176		
125	4	$KMnO_4$ Impingers	200	50	3	253		
126	5	$KMnO_4$ Acid Rinse		100		100		

Filter Gross wt: 0.3084 g Filter Net wt: 0.1600 g
Filter Tare wt: 0.1484 g Probe/Line Rinse wt: 0 g Condensate Total: 190.0 ml
Filter Net wt: 0.1600 g Total Particulate wt: 0.1600 g

Recovered By: Jim Date: 8-19-04

Location: RV Task: _____ Test: 4 Operator: Jim

Sample ID	Bottle #	Description	Initial Vol mL	Rinse Vol mL	Gain mL	Final Vol mL	ppb Hg	Total ug of Hg
	S	Filter/Solids						
132	1A	Probe & Filter Rinse				83		
—	1B	Heated Line Rinse						
133	2	KCl Impingers	300	150	336	786		
134	3	HNO_3/H_2O_2 Impinger	100	75	1	176		
135	4	$KMnO_4$ Impingers	200	50	-5	245		
136	5	$KMnO_4$ Acid Rinse		100		100		

Filter Gross wt: _____ g Filter Net wt: _____ g
Filter Tare wt: _____ g Probe/Line Rinse wt: _____ g Condensate Total: 343.9 ml
Filter Net wt: _____ g Total Particulate wt: _____ g

Recovered By: Jim Date: 8-19-04

Location: STK Task: _____ Test: 4 Operator: Bruce

Sample ID	Bottle #	Description	Initial Vol mL	Rinse Vol mL	Gain mL	Final Vol mL	ppb Hg	Total ug of Hg
	S	Filter/Solids						
127	1A	Probe & Filter Rinse				172		
—	1B	Heated Line Rinse						
128	2	KCl Impingers	300	150	389	839		
129	3	HNO_3/H_2O_2 Impinger	100	75	13	188		
130	4	$KMnO_4$ Impingers	200	50	-1	249		
131	5	$KMnO_4$ Acid Rinse		100		100		

Filter Gross wt: 0.7140 g Filter Net wt: 0.2975 g
Filter Tare wt: 0.4165 g Probe/Line Rinse wt: 0 g Condensate Total: 417.9 ml
Filter Net wt: 0.2975 g Total Particulate wt: 0.2975 g

Recovered By: Jim Date: 8-19-04

Sample ID	Description	ppb Hg	Total ug of Hg
	3 in. Filter Blank		
	Thimble Blank		
137	KCl Blank		
	HNO_3 / H2O2 Blank		
	$KMnO_4$ Blank		
	HNO_3 / HCl Blank		

ANALNUM	SAMPLE	DATE	DESCR	MERCURY	
20044217	1	8/17/04	THIMBLE	<0.004	PPM
20044218	9 10	8/17/04	THIMBLE	0.008	PPM
20044219	17	8/17/04	THIMBLE	<0.004	PPM
20044220	2	8/18/04	THIMBLE	<0.004	PPM
20044221	11 12	8/18/04	THIMBLE	0.026	PPM
20044222	18	8/19/04	THIMBLE	0.024	PPM
20044223	3	8/18/04	THIMBLE	<0.003	PPM
20044224	13 14	8/18/04	THIMBLE	0.009	PPM
20044225	9	8/18/04	THIMBLE	0.012	PPM
20044226	4	8/19/04	THIMBLE	<0.004	PPM
20044227	15 16	8/19/04	THIMBLE	<0.004	PPM
20044228	20	8/19/04	THIMBLE	0.017	PPM
20044229	1	8/17/04	FILTER	<5.0	NG/FILTER
20044230	1	8/17/04	FILTER	28.9	NG/FILTER
20044231	2	8/18/04	FILTER	83.6	NG/FILTER
20044232	2	8/18/04	FILTER	<5.0	NG/FILTER
20044233	3	8/18/04	FILTER	43.1	NG/FILTER
20044234	3	8/18/04	FILTER	31.7	NG/FILTER
20044235	4	8/19/04	FILTER	<5.0	NG/FILTER
20044236	4	8/19/04	FILTER	<5.0	NG/FILTER
20044237	47-MM FILTER BLANK	8/19/04	FILTER BLANK	<5.0	NG/FILTER
20044238	3-IN FILTER BLANK	8/19/04	FILTER BLANK	<5.0	NG/FILTER
20044239	THIMBLE BLANK	8/19/04	THIMBLE BLANK	<0.005	PPM

Project No	Test	Date	Loc.	Operator	Sample ID #	Task	Description	Anal No.	Hg	
1621-87	1	8/24/04	SCRI	#VALUE!	1		PROBE & FILTER RINSE	20043968	<1.0	ng/ml
1621-87	1	8/24/04	SCRI	#VALUE!	2		HEATED LINE RINSE	20043969	<1.0	ng/ml
1621-87	1	8/24/04	SCRI	#VALUE!	3		KCL IMPINGER	20043970	23.4	ng/ml
1621-87	1	8/24/04	SCRI	#VALUE!	4		HNO3/H2O2 IMPINGER	20043971	1.7	ng/ml
1621-87	1	8/24/04	SCRI	#VALUE!	5		KMNO4 IMPINGER	20043972	10.2	ng/ml
1621-87	1	8/24/04	SCRI	#VALUE!	6		KMNO4 ACID RINSE	20043973	<1.0	ng/ml
1621-87	1	8/24/04	SCRO	#VALUE!	7		PROBE & FILTER RINSE	20043974	<1.0	ng/ml
1621-87	1	8/24/04	SCRO	#VALUE!	8		HEATED LINE RINSE	20043975	<1.0	ng/ml
1621-87	1	8/24/04	SCRO	#VALUE!	9		KCL IMPINGER	20043976	23.9	ng/ml
1621-87	1	8/24/04	SCRO	#VALUE!	10		HNO3/H2O2 IMPINGER	20043977	3.6	ng/ml
1621-87	1	8/24/04	SCRO	#VALUE!	11		KMNO4 IMPINGER	20043978	22.4	ng/ml
1621-87	1	8/24/04	SCRO	#VALUE!	12		KMNO4 ACID RINSE	20043979	<1.0	ng/ml
1621-87	1	8/24/04	AHO	#VALUE!	13		PROBE & FILTER RINSE	20043980	<1.0	ng/ml
1621-87	1	8/24/04	AHO	#VALUE!	14		HEATED LINE RINSE	20043981	<1.0	ng/ml
1621-87	1	8/24/04	AHO	#VALUE!	15		KCL IMPINGER	20043982	32.8	ng/ml
1621-87	1	8/24/04	AHO	#VALUE!	16		HNO3/H2O2 IMPINGER	20043983	0.5	ng/ml
1621-87	1	8/24/04	AHO	#VALUE!	17		KMNO4 IMPINGER	20043984	0.6	ng/ml
1621-87	1	8/24/04	AHO	#VALUE!	18		KMNO4 ACID RINSE	20043985	<1.0	ng/ml
1621-87	1	8/24/04	FGD	#VALUE!	19		PROBE & FILTER RINSE	20043986	<1.0	ng/ml
1621-87	1	8/24/04	FGD	#VALUE!	20		HEATED LINE RINSE	20043987	<1.0	ng/ml
1621-87	1	8/24/04	FGD	#VALUE!	21		KCL IMPINGER	20043988	39.5	ng/ml
1621-87	1	8/24/04	FGD	#VALUE!	22		HNO3/H2O2 IMPINGER	20043989	1.0	ng/ml
1621-87	1	8/24/04	FGD	#VALUE!	23		KMNO4 IMPINGER	20043990	0.9	ng/ml
1621-87	1	8/24/04	FGD	#VALUE!	24		KMNO4 ACID RINSE	20043991	<1.0	ng/ml
1621-87	1	8/24/04	STK	#VALUE!	25		PROBE & FILTER RINSE	20043992	<1.0	ng/ml
1621-87	1	8/24/04	STK	#VALUE!	26		KCL IMPINGER	20043993	2.2	ng/ml
1621-87	1	8/24/04	STK	#VALUE!	27		HNO3/H202 IMPINGER	20043994	0.8	ng/ml
1621-87	1	8/24/04	STK	#VALUE!	28		KMNO4 IMPINGER	20043995	2.5	ng/ml
1621-87	1	8/24/04	STK	#VALUE!	29		KMNO4 ACID RINSE	20043996	<1.0	ng/ml
1621-87	1	8/24/04	BLKIMP	#VALUE!	30		KCL IMPINGER	20043997	<0.2	ng/ml
1621-87	1	8/24/04	BLKIMP	#VALUE!	31		HNO3/H2O2 IMPINGER	20043998	<0.2	ng/ml
1621-87	1	8/24/04	BLKIMP	#VALUE!	32		KMNO4 IMPINGER	20043999	<0.2	ng/ml
1621-87	1	8/24/04	BLKIMP	#VALUE!	33		KMNO4 ACID RINSE	20044000	<1.0	ng/ml
1621-87	#VALUE!	8/24/04	#VALUE!	#VALUE!	34	#VALUE!	KCL BLANK	20044001	<0.2	ng/ml
1621-87	#VALUE!	8/24/04	#VALUE!	#VALUE!	35	#VALUE!	HNO3/H2O2 BLANK	20044002	<0.2	ng/ml
1621-87	#VALUE!	8/24/04	#VALUE!	#VALUE!	36	#VALUE!	KMNO4 BLANK	20044003	<0.2	ng/ml
1621-87	#VALUE!	8/24/04	#VALUE!	#VALUE!	37	#VALUE!	HNO3/HCL BLANK	20044004	<0.2	ng/ml
1621-87	2	8/24/04	SCRI	#VALUE!	38		PROBE & FILTER RINSE	20044005	<1.0	ng/ml
1621-87	2	8/24/04	SCRI	#VALUE!	39		HEATED LINE RINSE	20044006	<1.0	ng/ml
1621-87	2	8/24/04	SCRI	#VALUE!	40		KCL IMPINGER	20044007	21.0	ng/ml
1621-87	2	8/24/04	SCRI	#VALUE!	41		HNO3/H2O2 IMPINGER	20044008	1.7	ng/ml
1621-87	2	8/24/04	SCRI	#VALUE!	42		KMNO4 IMPINGER	20044009	2.9	ng/ml
1621-87	2	8/24/04	SCRI	#VALUE!	43		KMNO4 ACID RINSE	20044010	<1.0	ng/ml
1621-87	2	8/24/04	SCRO	#VALUE!	44		PROBE & FILTER RINSE	20044011	<1.0	ng/ml
1621-87	2	8/24/04	SCRO	#VALUE!	45		HEATED LINE RINSE	20044012	<1.0	ng/ml

1621-87	2	8/24/04	SCRO	#VALUE!	46		KCL IMPINGER	20044013	20.7	ng/ml
1621-87	2	8/24/04	SCRO	#VALUE!	47		HNO3/H2O2 IMPINGER	20044014	2.2	ng/ml
1621-87	2	8/24/04	SCRO	#VALUE!	48		KMNO4 IMPINGER	20044015	5.6	ng/ml
1621-87	2	8/24/04	SCRO	#VALUE!	49		KMNO4 ACID RINSE	20044016	<1.0	ng/ml
1621-87	2	8/24/04	AHO	#VALUE!	50		PROBE & FILTER RINSE	20044017	<1.0	ng/ml
1621-87	2	8/24/04	AHO	#VALUE!	51		HEATED LINE RINSE	20044018	<1.0	ng/ml
1621-87	2	8/24/04	AHO	#VALUE!	52		KCL IMPINGER	20044019	26.8	ng/ml
1621-87	2	8/24/04	AHO	#VALUE!	53		HNO3/H2O2 IMPINGER	20044020	0.4	ng/ml
1621-87	2	8/24/04	AHO	#VALUE!	54		KMNO4 IMPINGER	20044021	0.3	ng/ml
1621-87	2	8/24/04	AHO	#VALUE!	55		KMNO4 ACID RINSE	20044022	<1.0	ng/ml
1621-87	2	8/24/04	FGD	#VALUE!	56		PROBE & FILTER RINSE	20044023	<1.0	ng/ml
1621-87	2	8/24/04	FGD	#VALUE!	57		HEATED LINE RINSE	20044024	<1.0	ng/ml
1621-87	2	8/24/04	FGD	#VALUE!	58		KCL IMPINGER	20044025	42.6	ng/ml
1621-87	2	8/24/04	FGD	#VALUE!	59		HNO3/H2O2 IMPINGER	20044026	1.0	ng/ml
1621-87	2	8/24/04	FGD	#VALUE!	60		KMNO4 IMPINGER	20044027	4.7	ng/ml
1621-87	2	8/24/04	FGD	#VALUE!	61		KMNO4 ACID RINSE	20044028	<1.0	ng/ml
1621-87	2	8/24/04	STK	#VALUE!	62		PROBE & FILTER RINSE	20044029	<1.0	ng/ml
1621-87	2	8/24/04	STK	#VALUE!	63		KCL IMPINGER	20044030	1.8	ng/ml
1621-87	2	8/24/04	STK	#VALUE!	64		HNO3/H2O2 IMPINGER	20044031	0.7	ng/ml
1621-87	2	8/24/04	STK	#VALUE!	65		KMNO4 IMPINGER	20044032	8.1	ng/ml
1621-87	2	8/24/04	STK	#VALUE!	66		KMNO4 ACID RINSE	20044033	1.3	ng/ml
1621-87	2	8/24/04	RV	#VALUE!	67		PROBE & FILTER RINSE	20044034	9.6	ng/ml
1621-87	2	8/24/04	RV	#VALUE!	68		KCL IMPINGER	20044035	15.6	ng/ml
1621-87	2	8/24/04	RV	#VALUE!	69		HNO3/H2O2 IMPINGER	20044036	0.6	ng/ml
1621-87	2	8/24/04	RV	#VALUE!	70		KMNO4 IMPINGER	20044037	93.2	ng/ml
1621-87	2	8/24/04	RV	#VALUE!	71		KMNO4 ACID RINSE	20044038	6.0	ng/ml
1621-87	#VALUE!	8/24/04	#VALUE!	#VALUE!	72	#VALUE!	KMNO4 BLANK	20044039	1.2	ng/ml
1621-87	3	8/24/04	SCRI	#VALUE!	73		PROBE & FILTER RINSE	20044040	1.2	ng/ml
1621-87	3	8/24/04	SCRI	#VALUE!	74		HEATED LINE RINSE	20044041	2.1	ng/ml
1621-87	3	8/24/04	SCRI	#VALUE!	75		KCL IMPINGER	20044042	20.3	ng/ml
1621-87	3	8/24/04	SCRI	#VALUE!	76		HNO3/H202 IMPINGER	20044043	1.5	ng/ml
1621-87	3	8/24/04	SCRI	#VALUE!	77		KMNO4 IMPINGER	20044044	4.7	ng/ml
1621-87	3	8/24/04	SCRI	#VALUE!	78		KMNO4 ACID RINSE	20044045	<1.0	ng/ml
1621-87	3	8/24/04	SCRO	#VALUE!	79		PROBE & FILTER RINSE	20044046	<1.0	ng/ml
1621-87	3	8/24/04	SCRO	#VALUE!	80		HEATED LINE RINSE	20044047	<1.0	ng/ml
1621-87	3	8/24/04	SCRO	#VALUE!	81		KCL IMPINGER	20044048	26.2	ng/ml
1621-87	3	8/24/04	SCRO	#VALUE!	82		HNO3/H2O2 IMPINGER	20044049	1.6	ng/ml
1621-87	3	8/24/04	SCRO	#VALUE!	83		KMNO4 IMPINGER	20044050	7.8	ng/ml
1621-87	3	8/24/04	SCRO	#VALUE!	84		KMNO4 ACID RINSE	20044051	<1.0	ng/ml
1621-87	3	8/24/04	AHO	#VALUE!	85		PROBE & FILTER RINSE	20044052	1.1	ng/ml
1621-87	3	8/24/04	AHO	#VALUE!	86		HEATED LINE RINSE	20044053	<1.0	ng/ml
1621-87	3	8/24/04	AHO	#VALUE!	87		KCL IMPINGER	20044054	27.3	ng/ml
1621-87	3	8/24/04	AHO	#VALUE!	88		HNO3/H2O2 IMPINGER	20044055	0.3	ng/ml
1621-87	3	8/24/04	AHO	#VALUE!	89		KMNO4 IMPINGER	20044056	0.6	ng/ml
1621-87	3	8/24/04	AHO	#VALUE!	90		KMNO4 ACID RINSE	20044057	<1.0	ng/ml
1621-87	3	8/24/04	FGD	#VALUE!	91		PROBE & FILTER RINSE	20044058	<1.0	ng/ml

1621-87	3	8/24/04	FGD	#VALUE!	92		HEATED LINE RINSE	20044059	<1.0	ng/ml
1621-87	3	8/24/04	FGD	#VALUE!	93		KCL IMPINGER	20044060	40.0	ng/ml
1621-87	3	8/24/04	FGD	#VALUE!	94		HNO3/H2O2 IMPINGER	20044061	0.9	ng/ml
1621-87	3	8/24/04	FGD	#VALUE!	95		KMNO4 IMPINGER	20044062	0.8	ng/ml
1621-87	3	8/24/04	FGD	#VALUE!	96		KMNO4 ACID RINSE	20044063	<1.0	ng/ml
1621-87	3	8/24/04	STK	#VALUE!	97		PROBE & FILTER RINSE	20044064	1.0	ng/ml
1621-87	3	8/24/04	STK	#VALUE!	98		KCL IMPINGER	20044065	2.2	ng/ml
1621-87	3	8/24/04	STK	#VALUE!	99		HNO3/H2O2 IMPINGER	20044066	0.8	ng/ml
1621-87	3	8/24/04	STK	#VALUE!	100		KMNO4 IMPINGER	20044067	7.4	ng/ml
1621-87	3	8/24/04	STK	#VALUE!	101		KMNO4 ACID RINSE	20044068	<1.0	ng/ml
1621-87	#VALUE!	8/24/04	#VALUE!	#VALUE!	102	#VALUE!	KMNO4 BLANK	20044069	<0.2	ng/ml
1621-87	4	8/24/04	SCRI	#VALUE!	103		PROBE & FILTER RINSE	20044070	<1.0	ng/ml
1621-87	4	8/24/04	SCRI	#VALUE!	104		HEATED LINE RINSE	20044071	<1.0	ng/ml
1621-87	4	8/24/04	SCRI	#VALUE!	105		KCL IMPINGER	20044072	19.6	ng/ml
1621-87	4	8/24/04	SCRI	#VALUE!	106		HNO3/H2O2 IMPINGER	20044073	1.4	ng/ml
1621-87	4	8/24/04	SCRI	#VALUE!	107		KMNO4 IMPINGER	20044074	7.6	ng/ml
1621-87	4	8/24/04	SCRI	#VALUE!	108		KMNO4 ACID RINSE	20044075	<1.0	ng/ml
1621-87	4	8/24/04	SCRO	#VALUE!	109		PROBE & FILTER RINSE	20044076	<1.0	ng/ml
1621-87	4	8/24/04	SCRO	#VALUE!	110		HEATED LINE RINSE	20044077	<1.0	ng/ml
1621-87	4	8/24/04	SCRO	#VALUE!	111		KCL IMPINGER	20044078	22.7	ng/ml
1621-87	4	8/24/04	SCRO	#VALUE!	112		HNO3/H2O2 IMPINGER	20044079	2.2	ng/ml
1621-87	4	8/24/04	SCRO	#VALUE!	113		KMNO4 IMPINGER	20044080	10.4	ng/ml
1621-87	4	8/24/04	SCRO	#VALUE!	114		KMNO4 ACID RINSE	20044081	<1.0	ng/ml
1621-87	4	8/24/04	AHO	#VALUE!	115		PROBE & FILTER RINSE	20044082	<1.0	ng/ml
1621-87	4	8/24/04	AHO	#VALUE!	116		HEATED LINE RINSE	20044083	<1.0	ng/ml
1621-87	4	8/24/04	AHO	#VALUE!	117		KCL IMPINGER	20044084	27.6	ng/ml
1621-87	4	8/24/04	AHO	#VALUE!	118		HNO3/H2O2 IMPINGER	20044085	0.3	ng/ml
1621-87	4	8/24/04	AHO	#VALUE!	119		KMNO4 IMPINGER	20044086	1.2	ng/ml
1621-87	4	8/24/04	AHO	#VALUE!	120		KMNO4 ACID RINSE	20044087	<1.0	ng/ml
1621-87	4	8/24/04	FGD	#VALUE!	121		PROBE & FILTER RINSE	20044088	<1.0	ng/ml
1621-87	4	8/24/04	FGD	#VALUE!	122		HEATED LINE RINSE	20044089	<1.0	ng/ml
1621-87	4	8/24/04	FGD	#VALUE!	123		KCL IMPINGER	20044090	43.4	ng/ml
1621-87	4	8/24/04	FGD	#VALUE!	124		HNO3/H2O2 IMPINGER	20044091	0.8	ng/ml
1621-87	4	8/24/04	FGD	#VALUE!	125		KMNO4 IMPINGER	20044092	2.2	ng/ml
1621-87	4	8/24/04	FGD	#VALUE!	126		KMNO4 ACID RINSE	20044093	<1.0	ng/ml
1621-87	4	8/24/04	STK	#VALUE!	127		PROBE & FILTER RINSE	20044094	1.1	ng/ml
1621-87	4	8/24/04	STK	#VALUE!	128		KCL IMPINGER	20044095	1.4	ng/ml
1621-87	4	8/24/04	STK	#VALUE!	129		HNO3/H2O2 IMPINGER	20044096	0.6	ng/ml
1621-87	4	8/24/04	STK	#VALUE!	130		KMNO4 IMPINGER	20044097	17.1	ng/ml
1621-87	4	8/24/04	STK	#VALUE!	131		KMNO4 ACID RINSE	20044098	<1.0	ng/ml
1621-87	4	8/24/04	RV	#VALUE!	132		PROBE & FILTER RINSE	20044099	13.4	ng/ml
1621-87	4	8/24/04	RV	#VALUE!	133		KCL IMPINGER	20044100	6.1	ng/ml
1621-87	4	8/24/04	RV	#VALUE!	134		HNO3/H2O2 IMPINGER	20044101	0.8	ng/ml
1621-87	4	8/24/04	RV	#VALUE!	135		KMNO4 IMPINGER	20044102	179.6	ng/ml
1621-87	4	8/24/04	RV	#VALUE!	136		KMNO4 ACID RINSE	20044103	4.1	ng/ml
1621-87	#VALUE!	8/24/04	#VALUE!	#VALUE!	137	#VALUE!	KMNO4 BLANK	20044104	<0.2	ng/ml

Distribution: Witham, Locke
Project No.: 1621-87-1
Sample Date: 11-5-04

Location: FGD Inlet Task: _____ Test: 1 Operator: JL/DO

Sample ID	Bottle #	Description	Initial Vol mL	Rinse Vol mL	Gain mL	Final Vol mL	ppb Hg	Total ug of Hg
	S	Filter/Solids						
1	1A	Probe & Filter Rinse				130		
2	1B	Heated Line Rinse				109		
3	2	KCl Impingers	300	150	125	575		
4	3	HNO_3/H_2O_2 Impinger	100	75	0	175		
5	4	$KMnO_4$ Impingers	200	50	3	253		
6	5	$KMnO_4$ Acid Rinse		100		100		

Filter Gross wt: 0.2720 g Filter Net wt: _____ g
Filter Tare wt: 0.1510 g Probe/Line Rinse wt: _____ g Condensate Total: ~~17.8~~ ml 142.8
Filter Net wt: 0.1210 g Total Particulate wt: _____ g

Recovered By: Jm Date: 11-5-04

Location: RV Task: _____ Test: _____ Operator: _____

Sample ID	Bottle #	Description	Initial Vol mL	Rinse Vol mL	Gain mL	Final Vol mL	ppb Hg	Total ug of Hg
	S	Filter/Solids						
	1A	Probe & Filter Rinse						
	1B	Heated Line Rinse						
	2	KCl Impingers						
	3	HNO_3/H_2O_2 Impinger						
	4	$KMnO_4$ Impingers						
	5	$KMnO_4$ Acid Rinse						

Filter Gross wt: _____ g Filter Net wt: _____ g
Filter Tare wt: _____ g Probe/Line Rinse wt: _____ g Condensate Total: _____ ml
Filter Net wt: _____ g Total Particulate wt: _____ g

Recovered By: _____ Date: _____

Location: Blank Task: _____ Test: _____ Operator: _____

Sample ID	Bottle #	Description	Initial Vol mL	Rinse Vol mL	Gain mL	Final Vol mL	ppb Hg	Total ug of Hg
	S	Filter/Solids						
	1A	Probe & Filter Rinse						
	1B	Heated Line Rinse						
	2	KCl Impingers						
	3	HNO_3/H_2O_2 Impinger						
	4	$KMnO_4$ Impingers						
	5	$KMnO_4$ Acid Rinse						

Filter Gross wt: _____ g Filter Net wt: _____ g
Filter Tare wt: _____ g Probe/Line Rinse wt: _____ g Condensate Total: _____ ml
Filter Net wt: _____ g Total Particulate wt: _____ g

Recovered By: _____ Date: _____

Location: Stack Task: _____ Test: 1 Operator: DC/BS

Sample ID	Bottle #	Description	Initial Vol mL	Rinse Vol mL	Gain mL	Final Vol mL	ppb Hg	Total ug of Hg
	S	Filter/Solids						
7	1A	Probe & Filter Rinse				130		
	1B	Heated Line Rinse				—		
8	2	KCl Impingers	300	150	297	747		
9	3	HNO_3/H_2O_2 Impinger	100	75	16	191		
10	4	$KMnO_4$ Impingers	200	50	0	250		
11	5	$KMnO_4$ Acid Rinse		100		100		

Filter Gross wt: 0.4110 g Filter Net wt: 0.0021 g
Filter Tare wt: 0.4089 g Probe/Line Rinse wt: — g Condensate Total: ~~20.7~~ ml 330.7
Filter Net wt: 0.0021 g Total Particulate wt: 0.0021 g

Recovered By: Jm Date: 11-5-04

Sample ID	Description	ppb Hg	Total ug of Hg
	3 in. Filter Blank		
	Thimble Blank		
	KCl Blank		
	HNO_3 / H2O2 Blank		
	$KMnO_4$ Blank		
	HNO_3 / HCl Blank		

Distribution: Methum - Locke
Project No.: 1621-87-1
Sample Date: 11-5-04

Location: FGD Inlet Task: _____ Test: 2 Operator: JL/DO

Sample ID	Bottle #	Description	Initial Vol mL	Rinse Vol mL	Gain mL	Final Vol mL	ppb Hg	Total ug of Hg
	S	Filter/Solids						
12	1A	Probe & Filter Rinse				114		
13	1B	Heated Line Rinse				100		
14	2	KCl Impingers	300	150	125	575		
15	3	HNO_3/H_2O_2 Impinger	100	75	0	175		
16	4	$KMnO_4$ Impingers	200	50	-2	248		
17	5	$KMnO_4$ Acid Rinse		100		100		

Filter Gross wt: 0.2371 g Filter Net wt: 0.0870 g
Filter Tare wt: 0.1501 g Probe/Line Rinse wt: — g Condensate Total: ~~23.2~~ ml 143.2
Filter Net wt: 0.0870 g Total Particulate wt: 0.0870 g

Recovered By: Jr Date: 11-05-04

Location: RV Task: _____ Test: _____ Operator: _____

Sample ID	Bottle #	Description	Initial Vol mL	Rinse Vol mL	Gain mL	Final Vol mL	ppb Hg	Total ug of Hg
	S	Filter/Solids						
	1A	Probe & Filter Rinse						
	1B	Heated Line Rinse						
	2	KCl Impingers						
	3	HNO_3/H_2O_2 Impinger						
	4	$KMnO_4$ Impingers						
	5	$KMnO_4$ Acid Rinse						

Filter Gross wt: _____ g Filter Net wt: _____ g
Filter Tare wt: _____ g Probe/Line Rinse wt: _____ g Condensate Total: _____ ml
Filter Net wt: _____ g Total Particulate wt: _____ g

Recovered By: _____ Date: _____

Location: Blank Task: _____ Test: 2 Operator: BS

Sample ID	Bottle #	Description	Initial Vol mL	Rinse Vol mL	Gain mL	Final Vol mL	ppb Hg	Total ug of Hg
	S	Filter/Solids						
	1A	Probe & Filter Rinse						
	1B	Heated Line Rinse						
23	2	KCl Impingers	300	150	—	450		
24	3	HNO_3/H_2O_2 Impinger	100	75	—	175		
25	4	$KMnO_4$ Impingers	200	50	—	250		
26	5	$KMnO_4$ Acid Rinse		100	—	100		

Filter Gross wt: _____ g Filter Net wt: _____ g
Filter Tare wt: _____ g Probe/Line Rinse wt: _____ g Condensate Total: — ml
Filter Net wt: _____ g Total Particulate wt: _____ g

Recovered By: Jr Date: 11-05-04

Location: Stack Task: _____ Test: 2 Operator: DC/BS

Sample ID	Bottle #	Description	Initial Vol mL	Rinse Vol mL	Gain mL	Final Vol mL	ppb Hg	Total ug of Hg
	S	Filter/Solids						
18	1A	Probe & Filter Rinse				107		
	1B	Heated Line Rinse				—		
19	2	KCl Impingers	300	150	297	747		
20	3	HNO_3/H_2O_2 Impinger	100	75	15	190		
21	4	$KMnO_4$ Impingers	200	50	-6	244		
22	5	$KMnO_4$ Acid Rinse		100		100		

Filter Gross wt: 0.4099 g Filter Net wt: 0.0041 g
Filter Tare wt: 0.4058 g Probe/Line Rinse wt: — g Condensate Total: ~~22.1~~ ml 325.1
Filter Net wt: 0.0041 g Total Particulate wt: 0.0041 g

Recovered By: Jr Date: 11-05-04

Sample ID	Description	ppb Hg	Total ug of Hg
	3 in. Filter Blank		
	Thimble Blank		
27	KCl Blank		
28	HNO_3 / H2O2 Blank		
29	$KMnO_4$ Blank		
30	HNO_3 / HCl Blank		

Tests 1-2

Distribution: Mathum - Loche
Project No.: 1621-87-1
Sample Date: 11-5-04

Location: FGD Inlet Task: _____ Test: 3 Operator: JL/DO

Sample ID	Bottle #	Description	Initial Vol mL	Rinse Vol mL	Gain mL	Final Vol mL	ppb Hg	Total ug of Hg
	S	Filter/Solids						
31	1A	Probe & Filter Rinse				107		
32	1B	Heated Line Rinse				92		
33	2	KCl Impingers	300	150	134	584		
34	3	HNO_3/H_2O_2 Impinger	100	75	0	175		
35	4	$KMnO_4$ Impingers	200	50	0	250		
36	5	$KMnO_4$ Acid Rinse		100		100		

Filter Gross wt: 0.2979 g Filter Net wt: 0.1479 g
Filter Tare wt: 0.1500 g Probe/Line Rinse wt: — g Condensate Total: ~~22.2~~ ml 153.2
Filter Net wt: 0.1479 g Total Particulate wt: 0.1479 g

Recovered By: Jr Date: 11-5-04

Location: RV Task: _____ Test: _____ Operator: _____

Sample ID	Bottle #	Description	Initial Vol mL	Rinse Vol mL	Gain mL	Final Vol mL	ppb Hg	Total ug of Hg
	S	Filter/Solids						
	1A	Probe & Filter Rinse						
	1B	Heated Line Rinse						
	2	KCl Impingers						
	3	HNO_3/H_2O_2 Impinger						
	4	$KMnO_4$ Impingers						
	5	$KMnO_4$ Acid Rinse						

Filter Gross wt: _____ g Filter Net wt: _____ g
Filter Tare wt: _____ g Probe/Line Rinse wt: _____ g Condensate Total: _____ ml
Filter Net wt: _____ g Total Particulate wt: _____ g

Recovered By: _____ Date: _____

Location: Blank Task: _____ Test: _____ Operator: _____

Sample ID	Bottle #	Description	Initial Vol mL	Rinse Vol mL	Gain mL	Final Vol mL	ppb Hg	Total ug of Hg
	S	Filter/Solids						
	1A	Probe & Filter Rinse						
	1B	Heated Line Rinse						
	2	KCl Impingers						
	3	HNO_3/H_2O_2 Impinger						
	4	$KMnO_4$ Impingers						
	5	$KMnO_4$ Acid Rinse						

Filter Gross wt: _____ g Filter Net wt: _____ g
Filter Tare wt: _____ g Probe/Line Rinse wt: _____ g Condensate Total: _____ ml
Filter Net wt: _____ g Total Particulate wt: _____ g

Recovered By: _____ Date: _____

Location: Stack Task: _____ Test: 3 Operator: DC/BS

Sample ID	Bottle #	Description	Initial Vol mL	Rinse Vol mL	Gain mL	Final Vol mL	ppb Hg	Total ug of Hg
	S	Filter/Solids						
37	1A	Probe & Filter Rinse				113		
	1B	Heated Line Rinse				—		
38	2	KCl Impingers	300	150	315	765		
39	3	HNO_3/H_2O_2 Impinger	100	75	11	186		
40	4	$KMnO_4$ Impingers	200	50	-1	249		
41	5	$KMnO_4$ Acid Rinse		100		100		

Filter Gross wt: 0.4064 g Filter Net wt: 0.0026 g
Filter Tare wt: 0.4038 g Probe/Line Rinse wt: — g Condensate Total: ~~20.2~~ ml 342.2
Filter Net wt: 0.0026 g Total Particulate wt: 0.0026 g

Recovered By: Jr Date: 11-5-04

Sample ID	Description	ppb Hg	Total ug of Hg
	3 in. Filter Blank		
	Thimble Blank		
	KCl Blank		
	HNO_3 / H2O2 Blank		
42	$KMnO_4$ Blank		
	HNO_3 / HCl Blank		

Test 3

ANALNUM	SAMPLE	DATE	DESCR	Hg	units
20045498	TEST 1 1	11/05/04	FILTER	289	ng/filter
20045499	TEST 1 5	11/05/04	FILTER	<5.0	ng/filter
20045500	TEST 2 2	11/05/04	FILTER	137	ng/filter
20045501	TEST 2 6	11/05/04	FILTER	<5.0	ng/filter
20045502	TEST 3 3	11/05/04	FILTER	956	ng/filter
20045503	TEST 3 6	11/05/04	FILTER	14.9	ng/filter
20045504	47-MM FILTER BLANK	11/05/04	BLANK FILTER	<5.0	ng/filter
20045505	3-IN FILTER BLANK	11/05/04	BLANK FILTER	<5.0	ng/filter

Project No	Test	Date	Loc.	Operator	Sample ID #	Description	Anal No.	Hg	
1621-87	1	11/08/04	FGD	#VALUE!	1	PROBE & FILTER RINSE	20045426	<1.0	ng/ml
1621-87	1	11/08/04	FGD	#VALUE!	2	HEATED LINE RINSE	20045427	<1.0	ng/ml
1621-87	1	11/08/04	FGD	#VALUE!	3	KCL IMPINGER	20045428	27.0	ng/ml
1621-87	1	11/08/04	FGD	#VALUE!	4	HNO3/H2O2 IMPINGER	20045429	1.1	ng/ml
1621-87	1	11/08/04	FGD	#VALUE!	5	KMNO4 IMPINGER	20045430	4.5	ng/ml
1621-87	1	11/08/04	FGD	#VALUE!	6	KMNO4 ACID RINSE	20045431	<1.0	ng/ml
1621-87	1	11/08/04	STK	#VALUE!	7	PROBE & FILTER RINSE	20045432	<1.0	ng/ml
1621-87	1	11/08/04	STK	#VALUE!	8	KCL IMPINGER	20045433	2.9	ng/ml
1621-87	1	11/08/04	STK	#VALUE!	9	HNO3/H2O2 IMPINGER	20045434	0.4	ng/ml
1621-87	1	11/08/04	STK	#VALUE!	10	KMNO4 IMPINGER	20045435	24.9	ng/ml
1621-87	1	11/08/04	STK	#VALUE!	11	KMNO4 ACID RINSE	20045436	<1.0	ng/ml
1621-87	2	11/08/04	FGD	#VALUE!	12	PROBE & FILTER RINSE	20045437	<1.0	ng/ml
1621-87	2	11/08/04	FGD	#VALUE!	13	HEATED LINE RINSE	20045438	<1.0	ng/ml
1621-87	2	11/08/04	FGD	#VALUE!	14	KCL IMPINGER	20045439	50.2	ng/ml
1621-87	2	11/08/04	FGD	#VALUE!	15	HNO3/H2O2 IMPINGER	20045440	2.9	ng/ml
1621-87	2	11/08/04	FGD	#VALUE!	16	KMNO4 IMPINGER	20045441	3.6	ng/ml
1621-87	2	11/08/04	FGD	#VALUE!	17	KMNO4 ACID RINSE	20045442	<1.0	ng/ml
1621-87	2	11/08/04	STK	#VALUE!	18	PROBE & FILTER RINSE	20045443	<1.0	ng/ml
1621-87	2	11/08/04	STK	#VALUE!	19	KCL IMPINGER	20045444	4.4	ng/ml
1621-87	2	11/08/04	STK	#VALUE!	20	HNO3/H2O2 IMPINGER	20045445	0.8	ng/ml
1621-87	2	11/08/04	STK	#VALUE!	21	KMNO4 IMPINGER	20045446	27.8	ng/ml
1621-87	2	11/08/04	STK	#VALUE!	22	KMNO4 ACID RINSE	20045447	<1.0	ng/ml
1621-87	2	11/08/04	BLK	#VALUE!	23	KCL IMPINGER	20045448	<0.2	ng/ml
1621-87	2	11/08/04	BLK	#VALUE!	24	HNO3/H2O2 IMPINGER	20045449	<0.2	ng/ml
1621-87	2	11/08/04	BLK	#VALUE!	25	KMNO4 IMPINGER	20045450	<0.2	ng/ml
1621-87	2	11/08/04	BLK	#VALUE!	26	KMNO4 ACID RINSE	20045451	<1.0	ng/ml
1621-87	#VALUE!	11/08/04	#VALUE!	#VALUE!	27	KCL BLANK	20045452	<0.2	ng/ml
1621-87	#VALUE!	11/08/04	#VALUE!	#VALUE!	28	HNO3/H2O2 BLANK	20045453	<0.2	ng/ml
1621-87	#VALUE!	11/08/04	#VALUE!	#VALUE!	29	KMNO4 BLANK	20045454	<0.2	ng/ml
1621-87	#VALUE!	11/08/04	#VALUE!	#VALUE!	30	HNO3/HCL BLANK	20045455	<0.2	ng/ml
1621-87	3	11/08/04	FGD	#VALUE!	31	PROBE & FILTER RINSE	20045456	<1.0	ng/ml
1621-87	3	11/08/04	FGD	#VALUE!	32	HEATED LINE RINSE	20045457	<1.0	ng/ml
1621-87	3	11/08/04	FGD	#VALUE!	33	KCL IMPINGER	20045458	38.3	ng/ml
1621-87	3	11/08/04	FGD	#VALUE!	34	HNO3/H2O2 IMPINGER	20045459	2.2	ng/ml
1621-87	3	11/08/04	FGD	#VALUE!	35	KMNO4 IMPINGER	20045460	6.8	ng/ml
1621-87	3	11/08/04	FGD	#VALUE!	36	KMNO4 ACID RINSE	20045461	<1.0	ng/ml
1621-87	3	11/08/04	STK	#VALUE!	37	PROBE & FILTER RINSE	20045462	<1.0	ng/ml
1621-87	3	11/08/04	STK	#VALUE!	38	KCL IMPINGER	20045463	2.2	ng/ml
1621-87	3	11/08/04	STK	#VALUE!	39	HNO3/H2O2 IMPINGER	20045464	0.5	ng/ml
1621-87	3	11/08/04	STK	#VALUE!	40	KMNO4 IMPINGER	20045465	22.8	ng/ml
1621-87	3	11/08/04	STK	#VALUE!	41	KMNO4 ACID RINSE	20045466	<1.0	ng/ml
1621-87	#VALUE!	11/08/04	#VALUE!	#VALUE!	42	KMNO4 BLANK	20045467	<0.2	ng/ml

APPENDIX D

Process Material Data

- Coal Analysis Data Sheets
- Bottom Ash Analysis Data Sheets
- Limestone Slurry Solids Analysis Data Sheets
- Limestone Slurry Filtrate Analysis Data Sheets
- Ash Analysis Data Sheets
- FGD Slurry Solids Analysis Data Sheets
- FGD Slurry Filtrate Data Sheets
- FGD Makeup Water Analysis Data Sheets

CONSOL ENERGY INC.
RESEARCH & DEVELOPMENT
ANALYTICAL LABORATORY
4000 BROWNSVILLE ROAD, SOUTH PARK, PA 15129

DESCRIPTION *COAL START OF TEST #1*
DATE SAMPLED *08/17/04*
SAMPLE NUMBER *COAL1-1*

DATE LOGGED *08/25/04*
DATE COMPLETED *09/10/04*
PROJECT NUMBER *1621-87 -*
ANALYTICAL NUMBER **044136**

ANALYSIS REPORT

PROXIMATE	(Dry)%
Ash	11.11
Volatile Matter	38.35
Fixed Carbon	50.54
Sulfur, Total	3.23
BTU/lb	12774
MAF BTU/lb	14371

ULTIMATE	(Dry)%
Carbon	71.33
Hydrogen	3.89
Nitrogen	1.81
Chlorine	0.019
Sulfur, Total	3.23
Ash	11.11
Oxygen (DIFF)	8.61

MAJOR ASH ELEM	%
Ignited at 75 C	
SiO2	49.22
Al2O3	23.45
TiO2	1.10
Fe2O3	20.50
CaO	1.42
MgO	0.93
Na2O	0.32
K2O	2.88
P2O5	0.26
SO3	1.36
UND	-1.44

TOTAL MOISTURE % 9.89

MISC. (As Det.)

Hg 0.104 PPM

AS DETERMINED MOISTURE: 6.19 %

DISTRIBUTION:
TSENG
LOCKE

Approved for transmittal _____

CONSOL ENERGY INC.
RESEARCH & DEVELOPMENT
ANALYTICAL LABORATORY
4000 BROWNSVILLE ROAD, SOUTH PARK, PA 15129

DESCRIPTION *COAL END OF TEST #1*
DATE SAMPLED *08/17/04*
SAMPLE NUMBER *COAL1-2*

DATE LOGGED *08/25/04*
DATE COMPLETED *09/10/04*
PROJECT NUMBER *1621-87 -*
ANALYTICAL NUMBER **044137**

ANALYSIS REPORT

PROXIMATE	(Dry)%
Ash	11.32
Volatile Matter	38.14
Fixed Carbon	50.54
Sulfur, Total	3.23
BTU/lb	12759
MAF BTU/lb	14388

ULTIMATE	(Dry)%
Carbon	71.28
Hydrogen	4.06
Nitrogen	1.85
Chlorine	0.021
Sulfur, Total	3.23
Ash	11.32
Oxygen (DIFF)	8.24

MAJOR ASH ELEM	%
Ignited at 75 C	
SiO2	50.07
Al2O3	23.39
TiO2	1.09
Fe2O3	19.58
CaO	1.33
MgO	0.92
Na2O	0.30
K2O	2.88
P2O5	0.24
SO3	1.31
UND	-1.11

TOTAL MOISTURE % 9.12

MISC. (As Det.)

Hg 0.128 PPM

AS DETERMINED MOISTURE: 6.17 %

DISTRIBUTION:
TSENG
LOCKE

Approved for transmittal _____

CONSOL ENERGY INC.
RESEARCH & DEVELOPMENT
ANALYTICAL LABORATORY
4000 BROWNSVILLE ROAD, SOUTH PARK, PA 15129

DESCRIPTION *COAL START OF TEST #2*
DATE SAMPLED *08/17/04*
SAMPLE NUMBER *COAL 2-1*

DATE LOGGED *08/25/04*
DATE COMPLETED *09/10/04*
PROJECT NUMBER *1621-87 -*
ANALYTICAL NUMBER 044138

ANALYSIS REPORT

PROXIMATE	(Dry)%
Ash	10.48
Volatile Matter	38.70
Fixed Carbon	50.82
Sulfur, Total	3.67
BTU/lb	12808
MAF BTU/lb	14307

ULTIMATE	(Dry)%
Carbon	71.48
Hydrogen	4.11
Nitrogen	1.86
Chlorine	0.015
Sulfur, Total	3.67
Ash	10.48
Oxygen (DIFF)	8.38

MAJOR ASH ELEM	%
Ignited at 75 C	
SiO2	46.05
Al2O3	21.38
TiO2	0.99
Fe2O3	24.93
CaO	1.55
MgO	0.88
Na2O	0.29
K2O	2.63
P2O5	0.25
SO3	1.46
UND	-0.41

TOTAL MOISTURE % 10.21

MISC. (As Det.)

Hg 0.118 PPM

AS DETERMINED MOISTURE: 6.36 %

DISTRIBUTION:
TSENG
LOCKE

Approved for transmittal _____

CONSOL ENERGY INC.
RESEARCH & DEVELOPMENT
ANALYTICAL LABORATORY
4000 BROWNSVILLE ROAD, SOUTH PARK, PA 15129

DESCRIPTION *COAL END OF TEST #2*
DATE SAMPLED *08/18/04*
SAMPLE NUMBER *COAL 2-2*

DATE LOGGED *08/25/04*
DATE COMPLETED *09/10/04*
PROJECT NUMBER *1621-87 -*
ANALYTICAL NUMBER 044139

ANALYSIS REPORT

PROXIMATE	(Dry)%
Ash	10.80
Volatile Matter	39.06
Fixed Carbon	50.14
Sulfur, Total	3.80
BTU/lb	12783
MAF BTU/lb	14331
TOTAL MOISTURE %	10.44

ULTIMATE	(Dry)%
Carbon	71.25
Hydrogen	4.01
Nitrogen	1.88
Chlorine	0.015
Sulfur, Total	3.80
Ash	10.80
Oxygen (DIFF)	8.25

MAJOR ASH ELEM	%
Ignited at 75 C	
SiO2	44.31
Al2O3	20.91
TiO2	0.97
Fe2O3	26.02
CaO	1.96
MgO	0.86
Na2O	0.32
K2O	2.57
P2O5	0.23
SO3	1.98
UND	-0.13

MISC. (As Det.)

Hg 0.117 PPM

AS DETERMINED MOISTURE: 6.28 %

DISTRIBUTION:
TSENG
LOCKE

Approved for transmittal _____

CONSOL ENERGY INC.
RESEARCH & DEVELOPMENT
ANALYTICAL LABORATORY
4000 BROWNSVILLE ROAD, SOUTH PARK, PA 15129

DESCRIPTION *COAL START OF TEST #3*
DATE SAMPLED *08/18/04*
SAMPLE NUMBER *COAL 3-1*

DATE LOGGED *08/25/04*
DATE COMPLETED *09/10/04*
PROJECT NUMBER *1621-87 -*
ANALYTICAL NUMBER **044140**

ANALYSIS REPORT

PROXIMATE	(Dry)%
Ash	11.01
Volatile Matter	38.98
Fixed Carbon	50.01
Sulfur, Total	3.53
BTU/lb	12795
MAF BTU/lb	14378

ULTIMATE	(Dry)%
Carbon	71.65
Hydrogen	4.22
Nitrogen	1.85
Chlorine	0.011
Sulfur, Total	3.53
Ash	11.01
Oxygen (DIFF)	7.73

MAJOR ASH ELEM	%
Ignited at 75 C	
SiO2	47.80
Al2O3	21.98
TiO2	1.04
Fe2O3	22.53
CaO	1.48
MgO	0.96
Na2O	0.28
K2O	2.79
P2O5	0.24
SO3	1.52
UND	-0.62

TOTAL MOISTURE % 10.30

MISC. (As Det.)

Hg 0.112 PPM

AS DETERMINED MOISTURE: 6.07 %

DISTRIBUTION:
TSENG
LOCKE

Approved for transmittal _____

CONSOL ENERGY INC.
RESEARCH & DEVELOPMENT
ANALYTICAL LABORATORY
4000 BROWNSVILLE ROAD, SOUTH PARK, PA 15129

DESCRIPTION *COAL END OF TEST#3*
DATE SAMPLED *08/18/04*
SAMPLE NUMBER *COAL 3-2*

DATE LOGGED *08/25/04*
DATE COMPLETED *09/02/04*
PROJECT NUMBER *1621-87 -*
ANALYTICAL NUMBER 044141

ANALYSIS REPORT

PROXIMATE	(Dry)%
Ash	11.01
Volatile Matter	38.92
Fixed Carbon	50.07
Sulfur, Total	3.69
BTU/lb	12740
MAF BTU/lb	14316

ULTIMATE	(Dry)%
Carbon	69.93
Hydrogen	4.00
Nitrogen	1.86
Chlorine	0.011
Sulfur, Total	3.69
Ash	11.01
Oxygen (DIFF)	9.50

MAJOR ASH ELEM	%
Ignited at 75 C	
SiO2	47.01
Al2O3	22.12
TiO2	1.00
Fe2O3	24.22
CaO	1.23
MgO	0.96
Na2O	0.28
K2O	3.05
P2O5	0.26
SO3	1.08
UND	-1.21

TOTAL MOISTURE % 9.93

MISC. (As Det.)

Hg 0.117 PPM

AS DETERMINED MOISTURE: 6.13 %

DISTRIBUTION:
TSENG
LOCKE

Approved for transmittal _____

CONSOL ENERGY INC.
RESEARCH & DEVELOPMENT
ANALYTICAL LABORATORY
4000 BROWNSVILLE ROAD, SOUTH PARK, PA 15129

DESCRIPTION *COAL START OF TEST#4*
DATE SAMPLED *08/19/04*
SAMPLE NUMBER *COAL 4-1*

DATE LOGGED *08/25/04*
DATE COMPLETED *09/02/04*
PROJECT NUMBER *1621-87 -*
ANALYTICAL NUMBER **044142**

ANALYSIS REPORT

PROXIMATE	(Dry)%
Ash	11.65
Volatile Matter	38.68
Fixed Carbon	49.67
Sulfur, Total	3.62
BTU/lb	12606
MAF BTU/lb	14268

ULTIMATE	(Dry)%
Carbon	71.02
Hydrogen	4.14
Nitrogen	1.77
Chlorine	0.011
Sulfur, Total	3.62
Ash	11.65
Oxygen (DIFF)	7.79

MAJOR ASH ELEM	%
Ignited at 75 C	
SiO2	47.86
Al2O3	22.22
TiO2	1.00
Fe2O3	22.18
CaO	1.79
MgO	1.02
Na2O	0.32
K2O	3.18
P2O5	0.24
SO3	1.48
UND	-1.29

TOTAL MOISTURE % 10.56

MISC. (As Det.)

Hg 0.106 PPM

AS DETERMINED MOISTURE: 6.36 %

DISTRIBUTION:
TSENG
LOCKE

Approved for transmittal _____

CONSOL ENERGY INC.
RESEARCH & DEVELOPMENT
ANALYTICAL LABORATORY
4000 BROWNSVILLE ROAD, SOUTH PARK, PA 15129

DESCRIPTION *COAL END OF TEST#4*
DATE SAMPLED *08/19/04*
SAMPLE NUMBER *COAL 4-2*

DATE LOGGED *08/25/04*
DATE COMPLETED *09/02/04*
PROJECT NUMBER *1621-87 -*
ANALYTICAL NUMBER **044143**

ANALYSIS REPORT

PROXIMATE	(Dry)%
Ash	10.47
Volatile Matter	39.25
Fixed Carbon	50.28
Sulfur, Total	3.64
BTU/lb	12810
MAF BTU/lb	14308

ULTIMATE	(Dry)%
Carbon	71.63
Hydrogen	4.02
Nitrogen	1.94
Chlorine	0.011
Sulfur, Total	3.64
Ash	10.47
Oxygen (DIFF)	8.29

MAJOR ASH ELEM	%
Ignited at 75 C	
SiO2	47.05
Al2O3	21.21
TiO2	0.97
Fe2O3	23.27
CaO	1.95
MgO	0.89
Na2O	0.28
K2O	2.89
P2O5	0.23
SO3	1.61
UND	-0.35

TOTAL MOISTURE % 10.48

MISC. (As Det.)

Hg 0.105 PPM

AS DETERMINED MOISTURE: 6.20 %

DISTRIBUTION:
TSENG
LOCKE

Approved for transmittal _____

CONSOL ENERGY INC.
RESEARCH & DEVELOPMENT
ANALYTICAL LABORATORY
4000 BROWNSVILLE ROAD, SOUTH PARK, PA 15129

DESCRIPTION *COAL*
TEST 1
DATE SAMPLED *11/05/04*
SAMPLE NUMBER 1

DATE LOGGED *11/09/04*
DATE COMPLETED 11/18/04
PROJECT NUMBER 1621-87 -1
ANALYTICAL NUMBER **045578**

ANALYSIS REPORT

PROXIMATE	(Dry)%
Ash	11.88
Volatile Matter	37.62
Fixed Carbon	50.50
Sulfur, Total	3.63
BTU/lb	12868
MAF BTU/lb	14603

ULTIMATE	(Dry)%
Carbon	71.59
Hydrogen	4.66
Nitrogen	1.54
Chlorine	0.062
Sulfur, Total	3.63
Ash	11.88
Oxygen (DIFF)	6.64

MAJOR ASH ELEM	%
Ignited at 750 C	
SiO2	44.78
Al2O3	21.35
TiO2	0.98
Fe2O3	23.02
CaO	2.73
MgO	0.82
Na2O	0.47
K2O	2.67
P2O5	0.25
SO3	2.52
UND	0.41

TOTAL MOISTURE % 10.85

MISC. (As Det.)

Hg 0.127 PPM

AS DETERMINED MOISTURE: 3.22 %

DISTRIBUTION:
S. TSENG
J. WITHUM
J. LOCKE

Approved for transmittal _____

CONSOL ENERGY INC.
RESEARCH & DEVELOPMENT
ANALYTICAL LABORATORY
4000 BROWNSVILLE ROAD, SOUTH PARK, PA 15129

DESCRIPTION *COAL*
TEST 2
DATE SAMPLED *11/05/04*
SAMPLE NUMBER 2

DATE LOGGED *11/09/04*
DATE COMPLETED *11/18/04*
PROJECT NUMBER *1621-87 -1*
ANALYTICAL NUMBER **045579**

ANALYSIS REPORT

PROXIMATE	(Dry)%
Ash	12.16
Volatile Matter	37.49
Fixed Carbon	50.35
Sulfur, Total	3.73
BTU/lb	12901
MAF BTU/lb	14687

ULTIMATE	(Dry)%
Carbon	71.69
Hydrogen	4.63
Nitrogen	1.56
Chlorine	0.056
Sulfur, Total	3.73
Ash	12.16
Oxygen (DIFF)	6.17

MAJOR ASH ELEM	%
Ignited at 750 C	
SiO2	44.67
Al2O3	20.48
TiO2	0.99
Fe2O3	22.68
CaO	2.96
MgO	0.83
Na2O	0.43
K2O	2.48
P2O5	0.27
SO3	2.53
UND	1.68

TOTAL MOISTURE % 10.68

MISC. (As Det.)

Hg 0.144 PPM

AS DETERMINED MOISTURE: 3.20 %

DISTRIBUTION:
S. TSENG
J. WITHUM
J. LOCKE

Approved for transmittal _____

CONSOL ENERGY INC.
RESEARCH & DEVELOPMENT
ANALYTICAL LABORATORY
4000 BROWNSVILLE ROAD, SOUTH PARK, PA 15129

DESCRIPTION *COAL*
TEST 3
DATE SAMPLED *11/05/04*
SAMPLE NUMBER 3

DATE LOGGED *11/09/04*
DATE COMPLETED 11/18/04
PROJECT NUMBER 1621-87 -1
ANALYTICAL NUMBER **045580**

ANALYSIS REPORT

PROXIMATE	(Dry)%
Ash	12.21
Volatile Matter	37.49
Fixed Carbon	50.30
Sulfur, Total	3.67
BTU/lb	12856
MAF BTU/lb	14644

ULTIMATE	(Dry)%
Carbon	71.06
Hydrogen	4.63
Nitrogen	1.57
Chlorine	0.052
Sulfur, Total	3.67
Ash	12.21
Oxygen (DIFF)	6.81

MAJOR ASH ELEM	%
Ignited at 750 C	
SiO2	45.11
Al2O3	20.46
TiO2	0.99
Fe2O3	22.85
CaO	2.82
MgO	0.80
Na2O	0.43
K2O	2.38
P2O5	0.23
SO3	2.34
UND	1.59

TOTAL MOISTURE % 10.44

MISC. (As Det.)

Hg 0.148 PPM

AS DETERMINED MOISTURE: 3.37 %

DISTRIBUTION:
S. TSENG
J. WITHUM
J. LOCKE

Approved for transmittal _____

CONSOL ENERGY INC.
RESEARCH & DEVELOPMENT
ANALYTICAL LABORATORY
4000 BROWNSVILLE ROAD, SOUTH PARK, PA 15129

DESCRIPTION *BOTTOM ASH TEST#1*
DATE SAMPLED *08/17/04*
SAMPLE NUMBER *BOTTOM ASH TEST#1*

DATE LOGGED *08/25/04*
DATE COMPLETED *09/15/04*
PROJECT NUMBER *1621-87 -*
ANALYTICAL NUMBER **044145**

ANALYSIS REPORT

PROXIMATE	(Dry)%
Ash	99.51
Total Sulfur	0.13

MISC. (As Det.)	
Hg	0.009 PPM

ULTIMATE	(Dry)%
Carbon	1.00
Chlorine	0.041
Ash	99.51

MAJOR ASH ELEM	(Dry)%
SiO2	48.15
Al2O3	21.26
TiO2	1.03
Fe2O3	24.87
CaO	1.80
MgO	0.95
Na2O	0.27
K2O	2.31
P2O5	0.09
SO3	0.33
UND	-1.06

AS DETERMINED MOISTURE: 0.20 %

DISTRIBUTION:
TSENG
LOCKE

Approved for transmittal _____

CONSOL ENERGY INC.
RESEARCH & DEVELOPMENT
ANALYTICAL LABORATORY
4000 BROWNSVILLE ROAD, SOUTH PARK, PA 15129

DESCRIPTION *BOTTOM ASH TESTS#2 & #3*
DATE SAMPLED *08/18/04*
SAMPLE NUMBER *BOTTOM ASH TEST 2&3*

DATE LOGGED *08/25/04*
DATE COMPLETED *09/15/04*
PROJECT NUMBER *1621-87 -*
ANALYTICAL NUMBER 044146

ANALYSIS REPORT

PROXIMATE	(Dry)%
Ash	97.17
Total Sulfur	0.68

MISC. (As Det.)	
Hg	0.022 PPM

ULTIMATE	(Dry)%
Carbon	3.26
Chlorine	0.066
Ash	97.17

MAJOR ASH ELEM	(Dry)%
SiO2	44.89
Al2O3	18.93
TiO2	0.91
Fe2O3	28.70
CaO	1.90
MgO	0.90
Na2O	0.25
K2O	2.11
P2O5	0.08
SO3	1.69
UND	-0.36

AS DETERMINED MOISTURE: 0.40 %

DISTRIBUTION:
TSENG
LOCKE

Approved for transmittal _____

CONSOL ENERGY INC.
RESEARCH & DEVELOPMENT
ANALYTICAL LABORATORY
4000 BROWNSVILLE ROAD, SOUTH PARK, PA 15129

DESCRIPTION *BOTTOM ASH TEST#43*
DATE SAMPLED *08/19/04*
SAMPLE NUMBER *BOTTOM ASH TEST #4*

DATE LOGGED *08/25/04*
DATE COMPLETED *09/15/04*
PROJECT NUMBER *1621-87 -*
ANALYTICAL NUMBER **044147**

ANALYSIS REPORT

PROXIMATE	(Dry)%
Ash	99.33
Total Sulfur	0.28

MISC. (As Det.)	
Hg	0.007 PPM

ULTIMATE	(Dry)%
Carbon	1.08
Chlorine	0.053
Ash	99.33

MAJOR ASH ELEM	(Dry)%
SiO2	47.28
Al2O3	19.66
TiO2	0.96
Fe2O3	26.65
CaO	1.73
MgO	0.97
Na2O	0.24
K2O	2.37
P2O5	0.09
SO3	0.71
UND	-0.66

AS DETERMINED MOISTURE: 0.32 %

DISTRIBUTION:
TSENG
LOCKE

Approved for transmittal _____

CONSOL ENERGY INC.
RESEARCH & DEVELOPMENT
ANALYTICAL LABORATORY
SOUTH PARK, PENNSYLVANIA 15129

TO: JAW/SCT/JEL

PROJECT NUMBER 1621-87 -

DATE LOGGED 08/25/04
DATE COMPLETED / /

DESCRIPTION BOTTOM ASH LIQUID
COMMENTS TEST 1
SAMPLE NUMBER 1
ANALYTICAL NUMBER 044240

		-------- WATER ANALYSIS ---------		
ANALYSIS	UNITS	VALUE	VALUE	DUP AVG
Calcium		745		
Total Iron		<0.05		
Magnesium		1310		
Potassium		85.2		
Sodium		210		
Ammonia as NH3	ppm	<10		
Chloride		1700		
Nitrate as N		<10		
Sulfate		5110		
MERCURY	ng/ml	<1.0		

Note: All units mg/L unless specified

CONSOL ENERGY INC.
RESEARCH & DEVELOPMENT
ANALYTICAL LABORATORY
SOUTH PARK, PENNSYLVANIA 15129

TO: JAW/SCT/JEL

PROJECT NUMBER 1621-87 -

DATE LOGGED 08/25/04
DATE COMPLETED / /

DESCRIPTION BOTTOM ASH LIQUID
COMMENTS TESTS 2&3
SAMPLE NUMBER 2&3
ANALYTICAL NUMBER 044241

		WATER ANALYSIS		
ANALYSIS	UNITS	VALUE	VALUE	DUP AVG
Calcium		853		
Total Iron		<0.05		
Magnesium		1150		
Potassium		74.6		
Sodium		184		
Ammonia as NH3	ppm	<10		
Chloride		1690		
Nitrate as N		<10		
Sulfate		4580		
MERCURY	ng/ml	<1.0		

Note: All units mg/L unless specified

CONSOL ENERGY INC.
RESEARCH & DEVELOPMENT
ANALYTICAL LABORATORY
SOUTH PARK, PENNSYLVANIA 15129

TO: JAW/SCT/JEL

PROJECT NUMBER 1621-87 -

DATE LOGGED 08/25/04
DATE COMPLETED / /

DESCRIPTION BOTTOM ASH LIQUID
COMMENTS TEST 4
SAMPLE NUMBER 4
ANALYTICAL NUMBER 044242

		-------- WATER ANALYSIS ---------		
ANALYSIS	UNITS	VALUE	VALUE	DUP AVG
Calcium		1110		
Total Iron		<0.05		
Magnesium		961		
Potassium		77.2		
Sodium		182		
Ammonia as NH3	ppm	<10		
Chloride		1720		
Nitrate as N		<10		
Sulfate		4280		
MERCURY	ng/ml	<1.0		

Note: All units mg/L unless specified

CONSOL ENERGY INC.
RESEARCH & DEVELOPMENT
ANALYTICAL LABORATORY
4000 BROWNSVILLE ROAD, SOUTH PARK, PA 15129

DESCRIPTION *LIMESTONE SLURRY SOLIDS TEST 1*
TANK B
DATE SAMPLED *08/19/04*
SAMPLE NUMBER *LIMESTONE SLURRY -1*

DATE LOGGED *08/25/04*
DATE COMPLETED *09/28/04*
PROJECT NUMBER *1621-87 -*
ANALYTICAL NUMBER **044148**

ANALYSIS REPORT

PROXIMATE	(Dry)%
Ash	58.36
Total Sulfur	0.12

MISC. (As Det.)	
Hg	0.006 PPM
%SOLIDS	25.7
DENSITY	1.144

ULTIMATE	(Dry)%
Carbon	11.18
Chlorine	0.029
Ash	58.36

MAJOR ASH ELEM	(Dry)%
SiO2	3.93
Al2O3	0.83
TiO2	0.03
Fe2O3	0.49
CaO	51.37
MgO	1.26
Na2O	0.02
K2O	0.20
P2O5	0.02
SO3	0.29
UND	41.56

AS DETERMINED MOISTURE: 0.16 %

DISTRIBUTION:
TSENG
LOCKE

Approved for transmittal _____

CONSOL ENERGY INC.
RESEARCH & DEVELOPMENT
ANALYTICAL LABORATORY
4000 BROWNSVILLE ROAD, SOUTH PARK, PA 15129

DESCRIPTION *LIMESTONE SLURRY SOLIDS TEST 2*
TANK B
DATE SAMPLED *08/19/04*
SAMPLE NUMBER *LIMESTONE SLURRY -2*

DATE LOGGED *08/25/04*
DATE COMPLETED *09/28/04*
PROJECT NUMBER *1621-87 -*
ANALYTICAL NUMBER 044149

ANALYSIS REPORT

PROXIMATE	(Dry)%
Ash	58.30
Total Sulfur	0.11

MISC. (As Det.)	
Hg	0.007 PPM
%SOLIDS	23.6
DENSITY	1.144

ULTIMATE	(Dry)%
Carbon	11.25
Chlorine	0.038
Ash	58.30

MAJOR ASH ELEM	(Dry)%
SiO2	3.61
Al2O3	0.76
TiO2	0.03
Fe2O3	0.48
CaO	51.15
MgO	1.26
Na2O	0.01
K2O	0.18
P2O5	0.02
SO3	0.28
UND	42.22

AS DETERMINED MOISTURE: 0.25 %

DISTRIBUTION:
TSENG
LOCKE

Approved for transmittal _____

CONSOL ENERGY INC.
RESEARCH & DEVELOPMENT
ANALYTICAL LABORATORY
4000 BROWNSVILLE ROAD, SOUTH PARK, PA 15129

DESCRIPTION *LIMESTONE SLURRY SOLIDS TEST 3*
TANK B
DATE SAMPLED *08/18/04*
SAMPLE NUMBER LIMESTONE SLURRY -3

DATE LOGGED *08/25/04*
DATE COMPLETED 09/28/04
PROJECT NUMBER 1621-87 -
ANALYTICAL NUMBER 044150

ANALYSIS REPORT

PROXIMATE	(Dry)%
Ash	58.15
Total Sulfur	0.12

MISC. (As Det.)	
Hg	0.006 PPM
%SOLIDS	24.2
DENSITY	1.157

ULTIMATE	(Dry)%
Carbon	10.95
Chlorine	0.034
Ash	58.15

MAJOR ASH ELEM	(Dry)%
SiO2	3.36
Al2O3	0.70
TiO2	0.03
Fe2O3	0.46
CaO	51.41
MgO	1.34
Na2O	0.01
K2O	0.18
P2O5	0.02
SO3	0.31
UND	42.18

AS DETERMINED MOISTURE: 0.10 %

DISTRIBUTION:
TSENG
LOCKE

Approved for transmittal _____

CONSOL ENERGY INC.
RESEARCH & DEVELOPMENT
ANALYTICAL LABORATORY
4000 BROWNSVILLE ROAD, SOUTH PARK, PA 15129

DESCRIPTION *LIMESTONE SLURRY SOLIDS TEST 4*
TANK B
DATE SAMPLED *08/19/04*
SAMPLE NUMBER LIMESTONE SLURRY -4

DATE LOGGED *08/25/04*
DATE COMPLETED 09/28/04
PROJECT NUMBER 1621-87 -
ANALYTICAL NUMBER 044151

ANALYSIS REPORT

PROXIMATE	(Dry)%
Ash	58.01
Total Sulfur	0.12

MISC. (As Det.)	
Hg	0.010 PPM
%SOLIDS	24.9
DENSITY	1.144

ULTIMATE	(Dry)%
Carbon	11.32
Chlorine	0.026
Ash	58.01

MAJOR ASH ELEM	(Dry)%
SiO2	3.06
Al2O3	0.64
TiO2	0.03
Fe2O3	0.44
CaO	51.42
MgO	1.32
Na2O	0.02
K2O	0.16
P2O5	0.02
SO3	0.29
UND	42.60

AS DETERMINED MOISTURE: 0.18 %

DISTRIBUTION:
TSENG
LOCKE

Approved for transmittal _____

CONSOL ENERGY INC.
RESEARCH & DEVELOPMENT
ANALYTICAL LABORATORY
4000 BROWNSVILLE ROAD, SOUTH PARK, PA 15129

DESCRIPTION *LIMESTONE SLURRY SOLIDS TEST 1*
TANK B
DATE SAMPLED *11/05/04*
SAMPLE NUMBER 1

DATE LOGGED *11/09/04*
DATE COMPLETED *12/03/04*
PROJECT NUMBER *1621-87 -1*
ANALYTICAL NUMBER 045581

ANALYSIS REPORT

PROXIMATE	(Dry)%
Ash	58.17
Total Sulfur	0.10

MISC. (As Det.)	
Hg	0.022
% SOLIDS	22.0
DENSITY	1.093

ULTIMATE	(Dry)%
Carbon	11.44
Chlorine	0.013
Ash	58.17

MAJOR ASH ELEM	(Dry)%
SiO2	4.07
Al2O3	0.78
TiO2	0.03
Fe2O3	0.52
CaO	53.79
MgO	1.49
Na2O	0.02
K2O	0.19
P2O5	0.01
SO3	0.26
UND	38.84

AS DETERMINED MOISTURE: 0.32 %

DISTRIBUTION:
S. TSENG
J. WITHUM
J. LOCKE

Approved for transmittal _____

CONSOL ENERGY INC.
RESEARCH & DEVELOPMENT
ANALYTICAL LABORATORY
4000 BROWNSVILLE ROAD, SOUTH PARK, PA 15129

DESCRIPTION *LIMESTONE SLURRY SOLIDS TEST 2*
TANK B
DATE SAMPLED *11/05/04*
SAMPLE NUMBER 2

DATE LOGGED *11/09/04*
DATE COMPLETED *12/03/04*
PROJECT NUMBER *1621-87 -1*
ANALYTICAL NUMBER **045582**

ANALYSIS REPORT

PROXIMATE	(Dry)%
Ash	58.22
Total Sulfur	0.10

MISC. (As Det.)	
Hg	0.025
% SOLIDS	21.9
DENSITY	1.076

ULTIMATE	(Dry)%
Carbon	11.34
Chlorine	0.020
Ash	58.22

MAJOR ASH ELEM	(Dry)%
SiO2	3.94
Al2O3	0.75
TiO2	0.03
Fe2O3	0.52
CaO	54.20
MgO	1.49
Na2O	0.03
K2O	0.19
P2O5	0.02
SO3	0.26
UND	38.57

AS DETERMINED MOISTURE: 0.32 %

DISTRIBUTION:
S. TSENG
J. WITHUM
J. LOCKE

Approved for transmittal _____

CONSOL ENERGY INC.
RESEARCH & DEVELOPMENT
ANALYTICAL LABORATORY
4000 BROWNSVILLE ROAD, SOUTH PARK, PA 15129

DESCRIPTION *LIMESTONE SLURRY SOLIDS TEST 3*
TANK B
DATE SAMPLED *11/05/04*
SAMPLE NUMBER 3

DATE LOGGED *11/09/04*
DATE COMPLETED *12/03/04*
PROJECT NUMBER *1621-87 -1*
ANALYTICAL NUMBER **045583**

ANALYSIS REPORT

PROXIMATE	(Dry)%
Ash	58.17
Total Sulfur	0.10

MISC. (As Det.)	
Hg	0.024
% SOLIDS	22.1
DENSITY	1.093

ULTIMATE	(Dry)%
Carbon	11.37
Chlorine	0.016
Ash	58.17

MAJOR ASH ELEM	(Dry)%
SiO2	3.90
Al2O3	0.76
TiO2	0.03
Fe2O3	0.52
CaO	53.99
MgO	1.52
Na2O	0.02
K2O	0.19
P2O5	0.01
SO3	0.26
UND	38.80

AS DETERMINED MOISTURE: 0.26 %

DISTRIBUTION:
S. TSENG
J. WITHUM
J. LOCKE

Approved for transmittal _____

CONSOL ENERGY INC.
RESEARCH & DEVELOPMENT
ANALYTICAL LABORATORY
SOUTH PARK, PENNSYLVANIA 15129

TO: JAW/SCT/JEL

PROJECT NUMBER 1621-87 -

DATE LOGGED 08/25/04
DATE COMPLETED / /

DESCRIPTION LIMESTONE SLURRY LIQUID
COMMENTS TEST 1
SAMPLE NUMBER 1
ANALYTICAL NUMBER 044243

		-------- WATER ANALYSIS ---------		
ANALYSIS	UNITS	VALUE	VALUE	DUP AVG
Calcium		671		
Total Iron		0.41		
Magnesium		1120		
Potassium		81.3		
Sodium		191		
Ammonia as NH3	ppm	<10		
Chloride		1650		
Nitrate as N		<10		
Sulfate		4290		

MERCURY	ng/ml	3.8

Note: All units mg/L unless specified

CONSOL ENERGY INC.
RESEARCH & DEVELOPMENT
ANALYTICAL LABORATORY
SOUTH PARK, PENNSYLVANIA 15129

TO: JAW/SCT/JEL

PROJECT NUMBER 1621-87 -

DATE LOGGED 08/25/04
DATE COMPLETED / /

DESCRIPTION LIMESTONE SLURRY LIQUID
COMMENTS TEST 2
SAMPLE NUMBER 2
ANALYTICAL NUMBER 044244

		-------- WATER ANALYSIS ---------		
ANALYSIS	UNITS	VALUE	VALUE	DUP AVG
Calcium		684		
Total Iron		0.05		
Magnesium		1130		
Potassium		81.2		
Sodium		190		
Ammonia as NH3	ppm	<10		
Chloride		1660		
Nitrate as N		<10		
Sulfate		4340		
MERCURY	ng/ml	<1.0		

Note: All units mg/L unless specified

CONSOL ENERGY INC.
RESEARCH & DEVELOPMENT
ANALYTICAL LABORATORY
SOUTH PARK, PENNSYLVANIA 15129

TO: JAW/SCT/JEL

PROJECT NUMBER 1621-87 -

DATE LOGGED 08/25/04
DATE COMPLETED / /

DESCRIPTION LIMESTONE SLURRY LIQUID
COMMENTS TEST 3
SAMPLE NUMBER 3
ANALYTICAL NUMBER 044245

		-------- WATER ANALYSIS ---------		
ANALYSIS	UNITS	VALUE	VALUE	DUP AVG
Calcium		722		
Total Iron		0.21		
Magnesium		1140		
Potassium		77.0		
Sodium		183		
Ammonia as NH3	ppm	<10		
Chloride		1650		
Nitrate as N		<10		
Sulfate		4380		
MERCURY	ng/ml	<1.0		

Note: All units mg/L unless specified

CONSOL ENERGY INC.
RESEARCH & DEVELOPMENT
ANALYTICAL LABORATORY
SOUTH PARK, PENNSYLVANIA 15129

TO: JAW/SCT/JEL

PROJECT NUMBER 1621-87 -

DATE LOGGED 08/25/04
DATE COMPLETED / /

DESCRIPTION LIMESTONE SLURRY LIQUID
COMMENTS TEST 4
SAMPLE NUMBER 4
ANALYTICAL NUMBER 044246

		-------- WATER ANALYSIS ---------		
ANALYSIS	UNITS	VALUE	VALUE	DUP AVG
Calcium		696		
Total Iron		<0.05		
Magnesium		1130		
Potassium		80.7		
Sodium		189		
Ammonia as NH3	ppm	<10		
Chloride		1800		
Nitrate as N		<10		
Sulfate		4360		
MERCURY	ng/ml	<1.0		

Note: All units mg/L unless specified

CONSOL ENERGY INC.
RESEARCH & DEVELOPMENT
ANALYTICAL LABORATORY
SOUTH PARK, PENNSYLVANIA 15129

TO: JAW/SCT/JEL

PROJECT NUMBER 1621-87 -1

DATE LOGGED 11/09/04
DATE COMPLETED / /

DESCRIPTION LIMESTONE SLURRY FILTRATE
COMMENTS TEST 1
SAMPLE NUMBER 1
ANALYTICAL NUMBER 045530

		-------- WATER ANALYSIS ---------		
ANALYSIS	UNITS	VALUE	VALUE	DUP AVG
Calcium		621		
Total Iron		<0.53		
Magnesium		1050		
Potassium		105		
Sodium		236		
Ammonia as NH3	ppm	<10		
Chloride		1670		
Nitrate as N		<0.02		
Sulfate		3920		
MERCURY	ng/ml	<1.0		

Note: All units mg/L unless specified

CONSOL ENERGY INC.
RESEARCH & DEVELOPMENT
ANALYTICAL LABORATORY
SOUTH PARK, PENNSYLVANIA 15129

TO: JAW/SCT/JEL

PROJECT NUMBER 1621-87 -1

DATE LOGGED 11/09/04
DATE COMPLETED / /

DESCRIPTION LIMESTONE SLURRY FILTRATE
COMMENTS TEST 2
SAMPLE NUMBER 2
ANALYTICAL NUMBER 045531

		-------- WATER ANALYSIS ---------		
ANALYSIS	UNITS	VALUE	VALUE	DUP AVG
Calcium		649		
Total Iron		<0.53		
Magnesium		1090		
Potassium		107		
Sodium		239		
Ammonia as NH3	ppm	<10		
Chloride		1620		
Nitrate as N		<0.02		
Sulfate		4010		
MERCURY	ng/ml	<1.0		

Note: All units mg/L unless specified

CONSOL ENERGY INC.
RESEARCH & DEVELOPMENT
ANALYTICAL LABORATORY
SOUTH PARK, PENNSYLVANIA 15129

TO: JAW/SCT/JEL

PROJECT NUMBER 1621-87 -1

DATE LOGGED 11/09/04
DATE COMPLETED / /

DESCRIPTION LIMESTONE SLURRY FILTRATE
COMMENTS TEST 3
SAMPLE NUMBER 3
ANALYTICAL NUMBER 045532

		-------- WATER ANALYSIS ---------		
ANALYSIS	UNITS	VALUE	VALUE	DUP AVG
Calcium		639		
Total Iron		<0.53		
Magnesium		1130		
Potassium		113		
Sodium		256		
Ammonia as NH3	ppm	<10		
Chloride		1650		
Nitrate as N		0.02		
Sulfate		4160		
MERCURY	ng/ml	<1.0		

Note: All units mg/L unless specified

CONSOL ENERGY INC.
RESEARCH & DEVELOPMENT
ANALYTICAL LABORATORY
4000 BROWNSVILLE ROAD, SOUTH PARK, PA 15129

DESCRIPTION *ESP HOPPER ASH 1A21*
TEST 1
DATE SAMPLED *08/17/04*
SAMPLE NUMBER *ESP ASH 1A21*

DATE LOGGED *08/25/04*
DATE COMPLETED *09/02/04*
PROJECT NUMBER *1621-87 -*
ANALYTICAL NUMBER 044161

ANALYSIS REPORT

PROXIMATE	(Dry)%
Ash	98.91
Total Sulfur	0.28

ULTIMATE	(Dry)%
Carbon	0.77
Ash	98.91

MAJOR ASH ELEM	(Dry)%
SiO2	49.17
Al2O3	23.71
TiO2	1.14
Fe2O3	20.56
CaO	1.84
MgO	0.99
Na2O	0.35
K2O	2.87
P2O5	0.23
SO3	0.69
UND	-1.55

MISC. (As Det.)

Hg 0.017 PPM

AS DETERMINED MOISTURE: 0.08 %

DISTRIBUTION:
TSENG
LOCKE

Approved for transmittal _____

CONSOL ENERGY INC.
RESEARCH & DEVELOPMENT
ANALYTICAL LABORATORY
4000 BROWNSVILLE ROAD, SOUTH PARK, PA 15129

DESCRIPTION *ESP HOPPER ASH 1A31*
TEST 1
DATE SAMPLED *08/17/04*
SAMPLE NUMBER *ESP ASH 1A31*

DATE LOGGED *08/25/04*
DATE COMPLETED *09/02/04*
PROJECT NUMBER *1621-87 -*
ANALYTICAL NUMBER 044162

ANALYSIS REPORT

PROXIMATE	(Dry)%
Ash	98.78
Total Sulfur	0.28

MISC. (As Det.)	
Hg	0.008 PPM

ULTIMATE	(Dry)%
Carbon	0.80
Ash	98.78

MAJOR ASH ELEM	(Dry)%
SiO2	48.72
Al2O3	23.05
TiO2	1.12
Fe2O3	20.77
CaO	1.84
MgO	0.99
Na2O	0.32
K2O	2.74
P2O5	0.24
SO3	0.69
UND	-0.48

AS DETERMINED MOISTURE: 0.02 %

DISTRIBUTION:
TSENG
LOCKE

Approved for transmittal _____

CONSOL ENERGY INC.
RESEARCH & DEVELOPMENT
ANALYTICAL LABORATORY
4000 BROWNSVILLE ROAD, SOUTH PARK, PA 15129

DESCRIPTION *ESP HOPPER ASH 1A41*
TEST 1
DATE SAMPLED *08/17/04*
SAMPLE NUMBER *ESP ASH 1A41*

DATE LOGGED *08/25/04*
DATE COMPLETED *09/02/04*
PROJECT NUMBER *1621-87 -*
ANALYTICAL NUMBER **044163**

ANALYSIS REPORT

PROXIMATE	(Dry)%
Ash	98.83
Total Sulfur	0.35

MISC. (As Det.)	
Hg	0.008 PPM

ULTIMATE	(Dry)%
Carbon	0.81
Ash	98.83

MAJOR ASH ELEM	(Dry)%
SiO2	49.54
Al2O3	23.38
TiO2	1.13
Fe2O3	19.72
CaO	2.08
MgO	1.04
Na2O	0.44
K2O	2.83
P2O5	0.28
SO3	0.87
UND	-1.31

AS DETERMINED MOISTURE: 0.05 %

DISTRIBUTION:
TSENG
LOCKE

Approved for transmittal _____

CONSOL ENERGY INC.
RESEARCH & DEVELOPMENT
ANALYTICAL LABORATORY
4000 BROWNSVILLE ROAD, SOUTH PARK, PA 15129

DESCRIPTION *ESP HOPPER ASH 1A22*
TEST 1
DATE SAMPLED *08/17/04*
SAMPLE NUMBER *ESP ASH 1A22*

DATE LOGGED *08/25/04*
DATE COMPLETED *09/02/04*
PROJECT NUMBER *1621-87 -*
ANALYTICAL NUMBER 044164

ANALYSIS REPORT

PROXIMATE	(Dry)%
Ash	98.59
Total Sulfur	0.37

ULTIMATE	(Dry)%
Carbon	0.84
Ash	98.59

MAJOR ASH ELEM	(Dry)%
SiO2	48.94
Al2O3	23.94
TiO2	1.12
Fe2O3	19.77
CaO	1.96
MgO	1.01
Na2O	0.42
K2O	2.90
P2O5	0.30
SO3	0.93
UND	-1.29

MISC. (As Det.)

Hg	0.022 PPM

AS DETERMINED MOISTURE: 0.04 %

DISTRIBUTION:
TSENG
LOCKE

Approved for transmittal _____

CONSOL ENERGY INC.
RESEARCH & DEVELOPMENT
ANALYTICAL LABORATORY
4000 BROWNSVILLE ROAD, SOUTH PARK, PA 15129

DESCRIPTION *ESP HOPPER ASH 1A32*
TEST1
DATE SAMPLED *08/17/04*
SAMPLE NUMBER *ESP ASH 1A32*

DATE LOGGED *08/25/04*
DATE COMPLETED *09/02/04*
PROJECT NUMBER *1621-87 -*
ANALYTICAL NUMBER 044165

ANALYSIS REPORT

PROXIMATE	(Dry)%
Ash	98.38
Total Sulfur	0.41

MISC. (As Det.)	
Hg	0.015 PPM

ULTIMATE	(Dry)%
Carbon	0.96
Ash	98.38

MAJOR ASH ELEM	(Dry)%
SiO2	48.89
Al2O3	23.89
TiO2	1.12
Fe2O3	19.41
CaO	2.05
MgO	1.04
Na2O	0.42
K2O	3.00
P2O5	0.29
SO3	1.02
UND	-1.13

AS DETERMINED MOISTURE: 0.04 %

DISTRIBUTION:
TSENG
LOCKE

Approved for transmittal _____

CONSOL ENERGY INC.
RESEARCH & DEVELOPMENT
ANALYTICAL LABORATORY
4000 BROWNSVILLE ROAD, SOUTH PARK, PA 15129

DESCRIPTION *ESP HOPPER ASH 1A42*
TEST1
DATE SAMPLED *08/17/04*
SAMPLE NUMBER *ESP ASH 1A42*

DATE LOGGED *08/25/04*
DATE COMPLETED *09/02/04*
PROJECT NUMBER *1621-87 -*
ANALYTICAL NUMBER 044166

ANALYSIS REPORT

PROXIMATE	(Dry)%
Ash	98.37
Total Sulfur	0.44

ULTIMATE	(Dry)%
Carbon	0.84
Ash	98.37

MAJOR ASH ELEM	(Dry)%
SiO2	49.13
Al2O3	24.04
TiO2	1.14
Fe2O3	18.59
CaO	1.91
MgO	1.05
Na2O	0.42
K2O	3.08
P2O5	0.31
SO3	1.09
UND	-0.76

MISC. (As Det.)	
Hg	0.007 PPM

AS DETERMINED MOISTURE: 0.05 %

DISTRIBUTION:
TSENG
LOCKE

Approved for transmittal _____

CONSOL ENERGY INC.
RESEARCH & DEVELOPMENT
ANALYTICAL LABORATORY
4000 BROWNSVILLE ROAD, SOUTH PARK, PA 15129

DESCRIPTION *ESP HOPPER ASH 1A33*
TEST1
DATE SAMPLED *08/17/04*
SAMPLE NUMBER *ESP ASH 1A33*

DATE LOGGED *08/25/04*
DATE COMPLETED *09/02/04*
PROJECT NUMBER *1621-87 -*
ANALYTICAL NUMBER 044167

ANALYSIS REPORT

PROXIMATE	(Dry)%
Ash	97.98
Total Sulfur	0.50

MISC. (As Det.)	
Hg	0.015 PPM

ULTIMATE	(Dry)%
Carbon	1.09
Ash	97.98

MAJOR ASH ELEM	(Dry)%
SiO2	49.25
Al2O3	24.28
TiO2	1.15
Fe2O3	18.45
CaO	1.87
MgO	1.07
Na2O	0.39
K2O	3.09
P2O5	0.34
SO3	1.24
UND	-1.13

AS DETERMINED MOISTURE: 0.01 %

DISTRIBUTION:
TSENG
LOCKE

Approved for transmittal _____

CONSOL ENERGY INC.
RESEARCH & DEVELOPMENT
ANALYTICAL LABORATORY
4000 BROWNSVILLE ROAD, SOUTH PARK, PA 15129

DESCRIPTION *ESP HOPPER ASH 1A43*
TEST1
DATE SAMPLED *08/17/04*
SAMPLE NUMBER *ESP ASH 1A43*

DATE LOGGED *08/25/04*
DATE COMPLETED *09/02/04*
PROJECT NUMBER *1621-87 -*
ANALYTICAL NUMBER 044168

ANALYSIS REPORT

PROXIMATE	(Dry)%
Ash	97.89
Total Sulfur	0.52

ULTIMATE	(Dry)%
Carbon	1.07
Ash	97.89

MAJOR ASH ELEM	(Dry)%
SiO2	48.90
Al2O3	23.48
TiO2	1.13
Fe2O3	18.38
CaO	1.93
MgO	1.05
Na2O	0.38
K2O	2.85
P2O5	0.34
SO3	1.31
UND	0.25

MISC. (As Det.)

Hg 0.009 PPM

AS DETERMINED MOISTURE: 0.04 %

DISTRIBUTION:
TSENG
LOCKE

Approved for transmittal _____

CONSOL ENERGY INC.
RESEARCH & DEVELOPMENT
ANALYTICAL LABORATORY
4000 BROWNSVILLE ROAD, SOUTH PARK, PA 15129

DESCRIPTION *ESP HOPPER ASH 1A34*
TEST1
DATE SAMPLED *08/17/04*
SAMPLE NUMBER *ESP ASH 1A34*

DATE LOGGED *08/25/04*
DATE COMPLETED *09/02/04*
PROJECT NUMBER *1621-87 -*
ANALYTICAL NUMBER **044169**

ANALYSIS REPORT

PROXIMATE	(Dry)%
Ash	97.53
Total Sulfur	0.60

MISC. (As Det.)	
Hg	0.024 PPM

ULTIMATE	(Dry)%
Carbon	1.21
Ash	97.53

MAJOR ASH ELEM	(Dry)%
SiO2	48.71
Al2O3	23.06
TiO2	1.12
Fe2O3	18.57
CaO	2.14
MgO	1.03
Na2O	0.39
K2O	2.79
P2O5	0.36
SO3	1.51
UND	0.32

AS DETERMINED MOISTURE: 0.05 %

DISTRIBUTION:
TSENG
LOCKE

Approved for transmittal _____

CONSOL ENERGY INC.
RESEARCH & DEVELOPMENT
ANALYTICAL LABORATORY
4000 BROWNSVILLE ROAD, SOUTH PARK, PA 15129

DESCRIPTION *ESP HOPPER ASH 1A44*
TEST1
DATE SAMPLED *08/17/04*
SAMPLE NUMBER *ESP ASH 1A44*

DATE LOGGED *08/25/04*
DATE COMPLETED *09/02/04*
PROJECT NUMBER *1621-87 -*
ANALYTICAL NUMBER **044170**

ANALYSIS REPORT

PROXIMATE	(Dry)%
Ash	97.46
Total Sulfur	0.62

MISC. (As Det.)	
Hg	0.016 PPM

ULTIMATE	(Dry)%
Carbon	1.26
Ash	97.46

MAJOR ASH ELEM	(Dry)%
SiO2	48.69
Al2O3	23.08
TiO2	1.12
Fe2O3	18.15
CaO	2.10
MgO	1.03
Na2O	0.40
K2O	2.76
P2O5	0.36
SO3	1.56
UND	0.75

AS DETERMINED MOISTURE: 0.05 %

DISTRIBUTION:
TSENG
LOCKE

Approved for transmittal _____

CONSOL ENERGY INC.
RESEARCH & DEVELOPMENT
ANALYTICAL LABORATORY
4000 BROWNSVILLE ROAD, SOUTH PARK, PA 15129

DESCRIPTION *ESP HOPPER ASH 1A35*
TEST1
DATE SAMPLED *08/17/04*
SAMPLE NUMBER *ESP ASH 1A35*

DATE LOGGED *08/25/04*
DATE COMPLETED *09/02/04*
PROJECT NUMBER *1621-87 -*
ANALYTICAL NUMBER **044171**

ANALYSIS REPORT

PROXIMATE	(Dry)%
Ash	97.20
Total Sulfur	0.25

MISC. (As Det.)	
Hg	0.081 PPM

ULTIMATE	(Dry)%
Carbon	2.13
Ash	97.20

MAJOR ASH ELEM	(Dry)%
SiO2	48.76
Al2O3	21.80
TiO2	1.00
Fe2O3	20.89
CaO	2.40
MgO	0.93
Na2O	0.30
K2O	2.39
P2O5	0.17
SO3	0.62
UND	0.74

AS DETERMINED MOISTURE: 0.13 %

DISTRIBUTION:
TSENG
LOCKE

Approved for transmittal _____

CONSOL ENERGY INC.
RESEARCH & DEVELOPMENT
ANALYTICAL LABORATORY
4000 BROWNSVILLE ROAD, SOUTH PARK, PA 15129

DESCRIPTION *ESP HOPPER ASH 1A45*
TEST1
DATE SAMPLED *08/17/04*
SAMPLE NUMBER *ESP ASH 1A45*

DATE LOGGED *08/25/04*
DATE COMPLETED *09/02/04*
PROJECT NUMBER *1621-87 -*
ANALYTICAL NUMBER **044172**

ANALYSIS REPORT

PROXIMATE	(Dry)%
Ash	96.85
Total Sulfur	0.82

MISC. (As Det.)	
Hg	0.022 PPM

ULTIMATE	(Dry)%
Carbon	1.49
Ash	96.85

MAJOR ASH ELEM	(Dry)%
SiO2	48.82
Al2O3	23.55
TiO2	1.13
Fe2O3	17.11
CaO	2.35
MgO	1.01
Na2O	0.43
K2O	2.73
P2O5	0.35
SO3	2.04
UND	0.48

AS DETERMINED MOISTURE: 0.01 %

DISTRIBUTION:
TSENG
LOCKE

Approved for transmittal _____

CONSOL ENERGY INC.
RESEARCH & DEVELOPMENT
ANALYTICAL LABORATORY
4000 BROWNSVILLE ROAD, SOUTH PARK, PA 15129

DESCRIPTION *ESP HOPPER ASH 1A21 TEST2*
DATE SAMPLED *08/18/04*
SAMPLE NUMBER *ESP ASH 2A21*

DATE LOGGED *08/25/04*
DATE COMPLETED *09/02/04*
PROJECT NUMBER *1621-87 -*
ANALYTICAL NUMBER **044173**

ANALYSIS REPORT

PROXIMATE	(Dry)%
Ash	98.76
Total Sulfur	0.27

MISC. (As Det.)	
Hg	0.013 PPM

ULTIMATE	(Dry)%
Carbon	0.88
Ash	98.76

MAJOR ASH ELEM	(Dry)%
SiO2	49.16
Al2O3	21.61
TiO2	1.09
Fe2O3	22.61
CaO	1.71
MgO	0.98
Na2O	0.29
K2O	2.69
P2O5	0.26
SO3	0.67
UND	-1.07

AS DETERMINED MOISTURE: 0.02 %

DISTRIBUTION:
TSENG
LOCKE

Approved for transmittal _____

CONSOL ENERGY INC.
RESEARCH & DEVELOPMENT
ANALYTICAL LABORATORY
4000 BROWNSVILLE ROAD, SOUTH PARK, PA 15129

DESCRIPTION *ESP HOPPER ASH 1A31 TEST2*
DATE SAMPLED *08/18/04*
SAMPLE NUMBER *ESP ASH 2A31*

DATE LOGGED *08/25/04*
DATE COMPLETED *09/02/04*
PROJECT NUMBER *1621-87 -*
ANALYTICAL NUMBER 044174

ANALYSIS REPORT

PROXIMATE	(Dry)%
Ash	98.71
Total Sulfur	0.27

ULTIMATE	(Dry)%
Carbon	0.90
Ash	98.71

MAJOR ASH ELEM	(Dry)%
SiO2	49.00
Al2O3	22.11
TiO2	1.10
Fe2O3	21.00
CaO	1.79
MgO	0.98
Na2O	0.32
K2O	2.82
P2O5	0.28
SO3	0.68
UND	-0.08

MISC. (As Det.)

Hg 0.009 PPM

AS DETERMINED MOISTURE: 0.16 %

DISTRIBUTION:
TSENG
LOCKE

Approved for transmittal _____

CONSOL ENERGY INC.
RESEARCH & DEVELOPMENT
ANALYTICAL LABORATORY
4000 BROWNSVILLE ROAD, SOUTH PARK, PA 15129

DESCRIPTION *ESP HOPPER ASH 1A41 TEST2*
DATE SAMPLED *08/18/04*
SAMPLE NUMBER *ESP ASH 2A41*

DATE LOGGED *08/25/04*
DATE COMPLETED *09/02/04*
PROJECT NUMBER *1621-87 -*
ANALYTICAL NUMBER 044175

ANALYSIS REPORT

PROXIMATE	(Dry)%
Ash	98.88
Total Sulfur	0.33

ULTIMATE	(Dry)%
Carbon	0.62
Ash	98.88

MAJOR ASH ELEM	(Dry)%
SiO2	49.94
Al2O3	23.15
TiO2	1.14
Fe2O3	19.65
CaO	2.08
MgO	1.02
Na2O	0.44
K2O	2.90
P2O5	0.27
SO3	0.82
UND	-1.41

MISC. (As Det.)

Hg 0.008 PPM

AS DETERMINED MOISTURE: 0.07 %

DISTRIBUTION:
TSENG
LOCKE

Approved for transmittal _____

CONSOL ENERGY INC.
RESEARCH & DEVELOPMENT
ANALYTICAL LABORATORY
4000 BROWNSVILLE ROAD, SOUTH PARK, PA 15129

DESCRIPTION *ESP HOPPER ASH 1A22 TEST2*
DATE SAMPLED *08/18/04*
SAMPLE NUMBER *ESP ASH 2A22*

DATE LOGGED *08/25/04*
DATE COMPLETED *09/02/04*
PROJECT NUMBER *1621-87 -*
ANALYTICAL NUMBER **044176**

ANALYSIS REPORT

PROXIMATE	(Dry)%
Ash	98.40
Total Sulfur	0.36

MISC. (As Det.)	
Hg	0.022 PPM

ULTIMATE	(Dry)%
Carbon	0.91
Ash	98.40

MAJOR ASH ELEM	(Dry)%
SiO2	49.06
Al2O3	22.03
TiO2	1.10
Fe2O3	21.50
CaO	1.74
MgO	1.01
Na2O	0.30
K2O	2.87
P2O5	0.31
SO3	0.91
UND	-0.83

AS DETERMINED MOISTURE: 0.01 %

DISTRIBUTION:
TSENG
LOCKE

Approved for transmittal _____

CONSOL ENERGY INC.
RESEARCH & DEVELOPMENT
ANALYTICAL LABORATORY
4000 BROWNSVILLE ROAD, SOUTH PARK, PA 15129

DESCRIPTION *ESP HOPPER ASH 1A32 TEST2*
DATE SAMPLED *08/18/04*
SAMPLE NUMBER *ESP ASH 2A32*

DATE LOGGED *08/25/04*
DATE COMPLETED *09/02/04*
PROJECT NUMBER *1621-87 -*
ANALYTICAL NUMBER **044177**

ANALYSIS REPORT

PROXIMATE	(Dry)%
Ash	98.12
Total Sulfur	0.40

ULTIMATE	(Dry)%
Carbon	1.14
Ash	98.12

MAJOR ASH ELEM	(Dry)%
SiO2	49.21
Al2O3	22.27
TiO2	1.11
Fe2O3	20.71
CaO	1.74
MgO	1.02
Na2O	0.31
K2O	2.98
P2O5	0.33
SO3	0.99
UND	-0.67

MISC. (As Det.)

Hg 0.012 PPM

AS DETERMINED MOISTURE: 0.04 %

DISTRIBUTION:
TSENG
LOCKE

Approved for transmittal _____

CONSOL ENERGY INC.
RESEARCH & DEVELOPMENT
ANALYTICAL LABORATORY
4000 BROWNSVILLE ROAD, SOUTH PARK, PA 15129

DESCRIPTION *ESP HOPPER ASH 1A42 TEST2*
DATE SAMPLED *08/18/04*
SAMPLE NUMBER *ESP ASH 2A42*

DATE LOGGED *08/25/04*
DATE COMPLETED *09/02/04*
PROJECT NUMBER *1621-87 -*
ANALYTICAL NUMBER 044178

ANALYSIS REPORT

PROXIMATE	(Dry)%
Ash	98.36
Total Sulfur	0.38

ULTIMATE	(Dry)%
Carbon	0.93
Ash	98.36

MAJOR ASH ELEM	(Dry)%
SiO2	49.54
Al2O3	22.67
TiO2	1.13
Fe2O3	19.27
CaO	1.90
MgO	1.03
Na2O	0.36
K2O	2.90
P2O5	0.34
SO3	0.96
UND	-0.10

MISC. (As Det.)

Hg 0.007 PPM

AS DETERMINED MOISTURE: 0.15 %

DISTRIBUTION:
TSENG
LOCKE

Approved for transmittal _____

CONSOL ENERGY INC.
RESEARCH & DEVELOPMENT
ANALYTICAL LABORATORY
4000 BROWNSVILLE ROAD, SOUTH PARK, PA 15129

DESCRIPTION *ESP HOPPER ASH 1A33 TEST2*
DATE SAMPLED *08/18/04*
SAMPLE NUMBER *ESP ASH 2A33*

DATE LOGGED *08/25/04*
DATE COMPLETED *09/02/04*
PROJECT NUMBER *1621-87 -*
ANALYTICAL NUMBER **044179**

ANALYSIS REPORT

PROXIMATE	(Dry)%
Ash	97.54
Total Sulfur	0.50

MISC. (As Det.)	
Hg	0.014 PPM

ULTIMATE	(Dry)%
Carbon	1.33
Ash	97.54

MAJOR ASH ELEM	(Dry)%
SiO2	48.98
Al2O3	22.35
TiO2	1.12
Fe2O3	19.79
CaO	1.81
MgO	1.03
Na2O	0.32
K2O	2.93
P2O5	0.37
SO3	1.24
UND	0.06

AS DETERMINED MOISTURE: 0.12 %

DISTRIBUTION:
TSENG
LOCKE

Approved for transmittal _____

CONSOL ENERGY INC.
RESEARCH & DEVELOPMENT
ANALYTICAL LABORATORY
4000 BROWNSVILLE ROAD, SOUTH PARK, PA 15129

DESCRIPTION *ESP HOPPER ASH 1A43 TEST2*
DATE SAMPLED *08/18/04*
SAMPLE NUMBER *ESP ASH 2A43*

DATE LOGGED *08/25/04*
DATE COMPLETED *09/02/04*
PROJECT NUMBER *1621-87 -*
ANALYTICAL NUMBER **044180**

ANALYSIS REPORT

PROXIMATE	(Dry)%
Ash	97.66
Total Sulfur	0.57

ULTIMATE	(Dry)%
Carbon	1.14
Ash	97.66

MAJOR ASH ELEM	(Dry)%
SiO2	48.88
Al2O3	22.41
TiO2	1.13
Fe2O3	19.58
CaO	1.86
MgO	1.03
Na2O	0.32
K2O	2.94
P2O5	0.37
SO3	1.42
UND	0.06

MISC. (As Det.)

Hg 0.009 PPM

AS DETERMINED MOISTURE: 0.15 %

DISTRIBUTION:
TSENG
LOCKE

Approved for transmittal _____

CONSOL ENERGY INC.
RESEARCH & DEVELOPMENT
ANALYTICAL LABORATORY
4000 BROWNSVILLE ROAD, SOUTH PARK, PA 15129

DESCRIPTION *ESP HOPPER ASH 1A34 TEST2*
DATE SAMPLED *08/18/04*
SAMPLE NUMBER *ESP ASH 2A34*

DATE LOGGED *08/25/04*
DATE COMPLETED *09/02/04*
PROJECT NUMBER *1621-87 -*
ANALYTICAL NUMBER 044181

ANALYSIS REPORT

PROXIMATE	(Dry)%
Ash	97.27
Total Sulfur	0.65

MISC. (As Det.)	
Hg	0.018 PPM

ULTIMATE	(Dry)%
Carbon	1.31
Ash	97.27

MAJOR ASH ELEM	(Dry)%
SiO2	48.74
Al2O3	22.38
TiO2	1.10
Fe2O3	19.67
CaO	2.02
MgO	1.02
Na2O	0.35
K2O	2.93
P2O5	0.37
SO3	1.62
UND	-0.20

AS DETERMINED MOISTURE: 0.10 %

DISTRIBUTION:
TSENG
LOCKE

Approved for transmittal _____

CONSOL ENERGY INC.
RESEARCH & DEVELOPMENT
ANALYTICAL LABORATORY
4000 BROWNSVILLE ROAD, SOUTH PARK, PA 15129

DESCRIPTION *ESP HOPPER ASH 1A44 TEST2*
DATE SAMPLED *08/18/04*
SAMPLE NUMBER *ESP ASH 2A44*

DATE LOGGED *08/25/04*
DATE COMPLETED *09/02/04*
PROJECT NUMBER *1621-87 -*
ANALYTICAL NUMBER **044182**

ANALYSIS REPORT

PROXIMATE	(Dry)%
Ash	97.22
Total Sulfur	0.71

MISC. (As Det.)	
Hg	0.016 PPM

ULTIMATE	(Dry)%
Carbon	1.24
Ash	97.22

MAJOR ASH ELEM	(Dry)%
SiO2	48.73
Al2O3	22.54
TiO2	1.11
Fe2O3	19.10
CaO	1.97
MgO	1.02
Na2O	0.38
K2O	2.95
P2O5	0.38
SO3	1.77
UND	0.05

AS DETERMINED MOISTURE: 0.16 %

DISTRIBUTION:
TSENG
LOCKE

Approved for transmittal _____

CONSOL ENERGY INC.
RESEARCH & DEVELOPMENT
ANALYTICAL LABORATORY
4000 BROWNSVILLE ROAD, SOUTH PARK, PA 15129

DESCRIPTION *ESP HOPPER ASH 1A35 TEST2*
DATE SAMPLED *08/18/04*
SAMPLE NUMBER *ESP ASH 2A35*

DATE LOGGED *08/25/04*
DATE COMPLETED *09/02/04*
PROJECT NUMBER *1621-87 -*
ANALYTICAL NUMBER 044183

ANALYSIS REPORT

PROXIMATE	(Dry)%
Ash	96.28
Total Sulfur	0.24

ULTIMATE	(Dry)%
Carbon	2.30
Ash	96.28

MAJOR ASH ELEM	(Dry)%
SiO2	47.61
Al2O3	20.54
TiO2	0.97
Fe2O3	25.25
CaO	2.24
MgO	0.90
Na2O	0.26
K2O	2.31
P2O5	0.17
SO3	0.60
UND	-0.85

MISC. (As Det.)

Hg 0.145 PPM

AS DETERMINED MOISTURE: 0.17 %

DISTRIBUTION:
TSENG
LOCKE

Approved for transmittal _____

CONSOL ENERGY INC.
RESEARCH & DEVELOPMENT
ANALYTICAL LABORATORY
4000 BROWNSVILLE ROAD, SOUTH PARK, PA 15129

DESCRIPTION *ESP HOPPER ASH 1A45 TEST2*
DATE SAMPLED *08/18/04*
SAMPLE NUMBER *ESP ASH 2A45*

DATE LOGGED *08/25/04*
DATE COMPLETED *09/02/04*
PROJECT NUMBER *1621-87 -*
ANALYTICAL NUMBER **044184**

ANALYSIS REPORT

PROXIMATE	(Dry)%
Ash	96.81
Total Sulfur	0.70

MISC. (As Det.)	
Hg	0.018 PPM

ULTIMATE	(Dry)%
Carbon	1.60
Ash	96.81

MAJOR ASH ELEM	(Dry)%
SiO2	48.26
Al2O3	22.09
TiO2	1.07
Fe2O3	19.37
CaO	2.20
MgO	0.98
Na2O	0.35
K2O	2.66
P2O5	0.32
SO3	1.76
UND	0.94

AS DETERMINED MOISTURE: 0.17 %

DISTRIBUTION:
TSENG
LOCKE

Approved for transmittal _____

CONSOL ENERGY INC.
RESEARCH & DEVELOPMENT
ANALYTICAL LABORATORY
4000 BROWNSVILLE ROAD, SOUTH PARK, PA 15129

DESCRIPTION *ESP HOPPER ASH 1A21 TEST3*
DATE SAMPLED *08/18/04*
SAMPLE NUMBER *ESP ASH 3A21*

DATE LOGGED *08/25/04*
DATE COMPLETED *09/10/04*
PROJECT NUMBER *1621-87 -*
ANALYTICAL NUMBER **044185**

ANALYSIS REPORT

PROXIMATE	(Dry)%
Ash	99.02
Total Sulfur	0.28

ULTIMATE	(Dry)%
Carbon	0.78
Ash	99.02

MAJOR ASH ELEM	%
Ignited at a C	
SiO2	48.72
Al2O3	22.31
TiO2	1.11
Fe2O3	21.74
CaO	2.19
MgO	0.97
Na2O	0.32
K2O	2.76
P2O5	0.21
SO3	0.71
UND	-1.04

MISC. (As Det.)

Hg 0.013 PPM

AS DETERMINED MOISTURE: 0.10 %

DISTRIBUTION:
TSENG
LOCKE

Approved for transmittal _____

CONSOL ENERGY INC.
RESEARCH & DEVELOPMENT
ANALYTICAL LABORATORY
4000 BROWNSVILLE ROAD, SOUTH PARK, PA 15129

DESCRIPTION *ESP HOPPER ASH 1A31 TEST3*
DATE SAMPLED *08/18/04*
SAMPLE NUMBER *ESP ASH 3A31*

DATE LOGGED *08/25/04*
DATE COMPLETED *09/10/04*
PROJECT NUMBER *1621-87 -*
ANALYTICAL NUMBER **044186**

ANALYSIS REPORT

PROXIMATE	(Dry)%
Ash	98.80
Total Sulfur	0.30

ULTIMATE	(Dry)%
Carbon	0.85
Ash	98.80

MAJOR ASH ELEM	%
Ignited at a C	
SiO2	49.33
Al2O3	22.18
TiO2	1.10
Fe2O3	21.66
CaO	1.87
MgO	0.98
Na2O	0.33
K2O	2.92
P2O5	0.24
SO3	0.76
UND	-1.37

MISC. (As Det.)

Hg 0.007 PPM

AS DETERMINED MOISTURE: 0.10 %

DISTRIBUTION:
TSENG
LOCKE

Approved for transmittal _____

CONSOL ENERGY INC.
RESEARCH & DEVELOPMENT
ANALYTICAL LABORATORY
4000 BROWNSVILLE ROAD, SOUTH PARK, PA 15129

DESCRIPTION *ESP HOPPER ASH 1A41*
TEST3
DATE SAMPLED *08/18/04*
SAMPLE NUMBER *ESP ASH 3A41*

DATE LOGGED *08/25/04*
DATE COMPLETED *09/10/04*
PROJECT NUMBER *1621-87 -*
ANALYTICAL NUMBER 044187

ANALYSIS REPORT

PROXIMATE	(Dry)%
Ash	98.87
Total Sulfur	0.33

ULTIMATE	(Dry)%
Carbon	0.65
Ash	98.87

MAJOR ASH ELEM	%
Ignited at a C	
SiO2	49.95
Al2O3	23.20
TiO2	1.12
Fe2O3	19.09
CaO	2.10
MgO	1.02
Na2O	0.43
K2O	2.89
P2O5	0.26
SO3	0.83
UND	-0.89

MISC. (As Det.)

Hg 0.008 PPM

AS DETERMINED MOISTURE: 0.06 %

DISTRIBUTION:
TSENG
LOCKE

Approved for transmittal _____

CONSOL ENERGY INC.
RESEARCH & DEVELOPMENT
ANALYTICAL LABORATORY
4000 BROWNSVILLE ROAD, SOUTH PARK, PA 15129

DESCRIPTION *ESP HOPPER ASH 1A22*
TEST3
DATE SAMPLED *08/18/04*
SAMPLE NUMBER *ESP ASH 3A22*

DATE LOGGED *08/25/04*
DATE COMPLETED *09/10/04*
PROJECT NUMBER *1621-87 -*
ANALYTICAL NUMBER **044188**

ANALYSIS REPORT

PROXIMATE	(Dry)%
Ash	98.54
Total Sulfur	0.38

ULTIMATE	(Dry)%
Carbon	0.93
Ash	98.54

MAJOR ASH ELEM	%
Ignited at a C	
SiO2	48.78
Al2O3	22.09
TiO2	1.10
Fe2O3	21.47
CaO	2.16
MgO	0.98
Na2O	0.32
K2O	2.87
P2O5	0.27
SO3	0.95
UND	-0.99

MISC. (As Det.)

Hg 0.016 PPM

AS DETERMINED MOISTURE: 0.09 %

DISTRIBUTION:
TSENG
LOCKE

Approved for transmittal _____

CONSOL ENERGY INC.
RESEARCH & DEVELOPMENT
ANALYTICAL LABORATORY
4000 BROWNSVILLE ROAD, SOUTH PARK, PA 15129

DESCRIPTION *ESP HOPPER ASH 1A32*
TEST3
DATE SAMPLED *08/18/04*
SAMPLE NUMBER *ESP ASH 3A32*

DATE LOGGED *08/25/04*
DATE COMPLETED *09/10/04*
PROJECT NUMBER *1621-87 -*
ANALYTICAL NUMBER 044189

ANALYSIS REPORT

PROXIMATE	(Dry)%
Ash	98.37
Total Sulfur	0.40

MISC. (As Det.)	
Hg	0.011 PPM

ULTIMATE	(Dry)%
Carbon	1.00
Ash	98.37

MAJOR ASH ELEM	%
Ignited at a C	
SiO2	49.05
Al2O3	22.40
TiO2	1.12
Fe2O3	21.12
CaO	2.01
MgO	1.01
Na2O	0.33
K2O	2.87
P2O5	0.28
SO3	1.00
UND	-1.19

AS DETERMINED MOISTURE: 0.11 %

DISTRIBUTION:
TSENG
LOCKE

Approved for transmittal _____

CONSOL ENERGY INC.
RESEARCH & DEVELOPMENT
ANALYTICAL LABORATORY
4000 BROWNSVILLE ROAD, SOUTH PARK, PA 15129

DESCRIPTION *ESP HOPPER ASH 1A42*
TEST3
DATE SAMPLED *08/18/04*
SAMPLE NUMBER *ESP ASH 3A42*

DATE LOGGED *08/25/04*
DATE COMPLETED *09/10/04*
PROJECT NUMBER *1621-87 -*
ANALYTICAL NUMBER **044190**

ANALYSIS REPORT

PROXIMATE	(Dry)%
Ash	98.37
Total Sulfur	0.42

ULTIMATE	(Dry)%
Carbon	0.98
Ash	98.37

MAJOR ASH ELEM	%
Ignited at a C	
SiO2	49.27
Al2O3	22.59
TiO2	1.12
Fe2O3	19.86
CaO	1.94
MgO	1.02
Na2O	0.35
K2O	2.98
P2O5	0.31
SO3	1.06
UND	-0.50

MISC. (As Det.)

Hg 0.007 PPM

AS DETERMINED MOISTURE: 0.08 %

DISTRIBUTION:
TSENG
LOCKE

Approved for transmittal _____

CONSOL ENERGY INC.
RESEARCH & DEVELOPMENT
ANALYTICAL LABORATORY
4000 BROWNSVILLE ROAD, SOUTH PARK, PA 15129

DESCRIPTION *ESP HOPPER ASH 1A33 TEST3*
DATE SAMPLED *08/18/04*
SAMPLE NUMBER *ESP ASH 3A33*

DATE LOGGED *08/25/04*
DATE COMPLETED *09/10/04*
PROJECT NUMBER *1621-87 -*
ANALYTICAL NUMBER 044191

ANALYSIS REPORT

PROXIMATE	(Dry)%
Ash	97.80
Total Sulfur	0.51

ULTIMATE	(Dry)%
Carbon	1.19
Ash	97.80

MAJOR ASH ELEM	%
Ignited at a C	
SiO2	49.22
Al2O3	23.09
TiO2	1.12
Fe2O3	19.42
CaO	1.84
MgO	1.03
Na2O	0.36
K2O	3.36
P2O5	0.33
SO3	1.28
UND	-1.05

MISC. (As Det.)

Hg 0.012 PPM

AS DETERMINED MOISTURE: 0.09 %

DISTRIBUTION:
TSENG
LOCKE

Approved for transmittal _____

CONSOL ENERGY INC.
RESEARCH & DEVELOPMENT
ANALYTICAL LABORATORY
4000 BROWNSVILLE ROAD, SOUTH PARK, PA 15129

DESCRIPTION *ESP HOPPER ASH 1A43 TEST3*
DATE SAMPLED *08/18/04*
SAMPLE NUMBER *ESP ASH 3A43*

DATE LOGGED *08/25/04*
DATE COMPLETED *09/10/04*
PROJECT NUMBER *1621-87 -*
ANALYTICAL NUMBER **044192**

ANALYSIS REPORT

PROXIMATE	(Dry)%
Ash	97.71
Total Sulfur	0.58

ULTIMATE	(Dry)%
Carbon	1.17
Ash	97.71

MAJOR ASH ELEM	%
Ignited at a C	
SiO2	49.33
Al2O3	22.93
TiO2	1.12
Fe2O3	19.31
CaO	1.80
MgO	1.03
Na2O	0.35
K2O	3.14
P2O5	0.36
SO3	1.46
UND	-0.83

MISC. (As Det.)	
Hg	0.009 PPM

AS DETERMINED MOISTURE: 0.12 %

DISTRIBUTION:
TSENG
LOCKE

Approved for transmittal _____

CONSOL ENERGY INC.
RESEARCH & DEVELOPMENT
ANALYTICAL LABORATORY
4000 BROWNSVILLE ROAD, SOUTH PARK, PA 15129

DESCRIPTION *ESP HOPPER ASH 1A34 TEST3*
DATE SAMPLED *08/18/04*
SAMPLE NUMBER *ESP ASH 3A34*

DATE LOGGED *08/25/04*
DATE COMPLETED *09/10/04*
PROJECT NUMBER *1621-87 -*
ANALYTICAL NUMBER **044193**

ANALYSIS REPORT

PROXIMATE	(Dry)%
Ash	97.40
Total Sulfur	0.63

ULTIMATE	(Dry)%
Carbon	1.31
Ash	97.40

MAJOR ASH ELEM	%
Ignited at a C	
SiO2	48.98
Al2O3	22.85
TiO2	1.11
Fe2O3	19.01
CaO	1.95
MgO	1.02
Na2O	0.39
K2O	3.15
P2O5	0.35
SO3	1.57
UND	-0.38

MISC. (As Det.)

Hg 0.020 PPM

AS DETERMINED MOISTURE: 0.13 %

DISTRIBUTION:
TSENG
LOCKE

Approved for transmittal _____

CONSOL ENERGY INC.
RESEARCH & DEVELOPMENT
ANALYTICAL LABORATORY
4000 BROWNSVILLE ROAD, SOUTH PARK, PA 15129

DESCRIPTION *ESP HOPPER ASH 1A44*
TEST3
DATE SAMPLED *08/18/04*
SAMPLE NUMBER *ESP ASH 3A44*

DATE LOGGED *08/25/04*
DATE COMPLETED *09/10/04*
PROJECT NUMBER *1621-87 -*
ANALYTICAL NUMBER **044194**

ANALYSIS REPORT

PROXIMATE	(Dry)%
Ash	97.32
Total Sulfur	0.68

ULTIMATE	(Dry)%
Carbon	1.21
Ash	97.32

MAJOR ASH ELEM	%
Ignited at a C	
SiO2	48.75
Al2O3	22.69
TiO2	1.11
Fe2O3	18.87
CaO	1.97
MgO	1.03
Na2O	0.36
K2O	2.94
P2O5	0.35
SO3	1.69
UND	0.24

MISC. (As Det.)

Hg 0.016 PPM

AS DETERMINED MOISTURE: 0.18 %

DISTRIBUTION:
TSENG
LOCKE

Approved for transmittal _____

CONSOL ENERGY INC.
RESEARCH & DEVELOPMENT
ANALYTICAL LABORATORY
4000 BROWNSVILLE ROAD, SOUTH PARK, PA 15129

DESCRIPTION *ESP HOPPER ASH 1A35 TEST3*
DATE SAMPLED *08/18/04*
SAMPLE NUMBER *ESP ASH 3A35*

DATE LOGGED *08/25/04*
DATE COMPLETED *09/10/04*
PROJECT NUMBER *1621-87 -*
ANALYTICAL NUMBER **044195**

ANALYSIS REPORT

PROXIMATE	(Dry)%
Ash	97.20
Total Sulfur	0.43

MISC. (As Det.)	
Hg	0.040 PPM

ULTIMATE	(Dry)%
Carbon	2.05
Ash	97.20

MAJOR ASH ELEM	%
Ignited at a C	
SiO2	48.58
Al2O3	21.81
TiO2	1.02
Fe2O3	21.15
CaO	2.14
MgO	0.95
Na2O	0.30
K2O	2.76
P2O5	0.21
SO3	1.08
UND	0.00

AS DETERMINED MOISTURE: 0.11 %

DISTRIBUTION:
TSENG
LOCKE

Approved for transmittal _____

CONSOL ENERGY INC.
RESEARCH & DEVELOPMENT
ANALYTICAL LABORATORY
4000 BROWNSVILLE ROAD, SOUTH PARK, PA 15129

DESCRIPTION *ESP HOPPER ASH 1A45 TEST3*
DATE SAMPLED *08/18/04*
SAMPLE NUMBER *ESP ASH 3A45*

DATE LOGGED *08/25/04*
DATE COMPLETED *09/10/04*
PROJECT NUMBER *1621-87 -*
ANALYTICAL NUMBER 044196

ANALYSIS REPORT

PROXIMATE	(Dry)%
Ash	96.84
Total Sulfur	0.87

ULTIMATE	(Dry)%
Carbon	1.28
Ash	96.84

MAJOR ASH ELEM	(Dry)%
SiO2	48.67
Al2O3	22.98
TiO2	1.11
Fe2O3	18.23
CaO	2.12
MgO	1.01
Na2O	0.39
K2O	2.89
P2O5	0.36
SO3	2.18
UND	0.06

MISC. (As Det.)

Hg 0.010 PPM

AS DETERMINED MOISTURE: 0.09 %

DISTRIBUTION:
TSENG
LOCKE

Approved for transmittal _____

CONSOL ENERGY INC.
RESEARCH & DEVELOPMENT
ANALYTICAL LABORATORY
4000 BROWNSVILLE ROAD, SOUTH PARK, PA 15129

DESCRIPTION *ESP HOPPER ASH 1A11 TEST4*
DATE SAMPLED *08/19/04*
SAMPLE NUMBER *ESP ASH 4A11*

DATE LOGGED *08/25/04*
DATE COMPLETED *09/10/04*
PROJECT NUMBER *1621-87 -*
ANALYTICAL NUMBER 044197

ANALYSIS REPORT

PROXIMATE	(Dry)%
Ash	98.80
Total Sulfur	0.28

ULTIMATE	(Dry)%
Carbon	0.75
Ash	98.80

MAJOR ASH ELEM	(Dry)%
SiO2	50.18
Al2O3	21.95
TiO2	1.09
Fe2O3	20.50
CaO	1.79
MgO	1.01
Na2O	0.33
K2O	2.97
P2O5	0.26
SO3	0.69
UND	-0.77

MISC. (As Det.)

Hg 0.016 PPM

AS DETERMINED MOISTURE: 0.13 %

DISTRIBUTION:
TSENG
LOCKE

Approved for transmittal _____

CONSOL ENERGY INC.
RESEARCH & DEVELOPMENT
ANALYTICAL LABORATORY
4000 BROWNSVILLE ROAD, SOUTH PARK, PA 15129

DESCRIPTION *ESP HOPPER ASH 1A21 TEST4*
DATE SAMPLED *08/19/04*
SAMPLE NUMBER *ESP ASH 4A21*

DATE LOGGED *08/25/04*
DATE COMPLETED *09/10/04*
PROJECT NUMBER *1621-87 -*
ANALYTICAL NUMBER 044198

ANALYSIS REPORT

PROXIMATE	(Dry)%
Ash	99.11
Total Sulfur	0.21

ULTIMATE	(Dry)%
Carbon	0.74
Ash	99.11

MAJOR ASH ELEM	(Dry)%
SiO2	49.75
Al2O3	21.85
TiO2	1.08
Fe2O3	22.06
CaO	1.70
MgO	0.99
Na2O	0.29
K2O	2.88
P2O5	0.21
SO3	0.53
UND	-1.34

MISC. (As Det.)

Hg 0.013 PPM

AS DETERMINED MOISTURE: 0.09 %

DISTRIBUTION:
TSENG
LOCKE

Approved for transmittal _____

CONSOL ENERGY INC.
RESEARCH & DEVELOPMENT
ANALYTICAL LABORATORY
4000 BROWNSVILLE ROAD, SOUTH PARK, PA 15129

DESCRIPTION *ESP HOPPER ASH 1A31 TEST4*
DATE SAMPLED *08/19/04*
SAMPLE NUMBER *ESP ASH 4A31*

DATE LOGGED *08/25/04*
DATE COMPLETED *09/10/04*
PROJECT NUMBER *1621-87 -*
ANALYTICAL NUMBER **044199**

ANALYSIS REPORT

PROXIMATE	(Dry)%
Ash	98.96
Total Sulfur	0.25

ULTIMATE	(Dry)%
Carbon	0.83
Ash	98.96

MAJOR ASH ELEM	(Dry)%
SiO2	49.93
Al2O3	21.51
TiO2	1.09
Fe2O3	22.05
CaO	1.78
MgO	0.97
Na2O	0.29
K2O	2.80
P2O5	0.20
SO3	0.62
UND	-1.24

MISC. (As Det.)

Hg 0.005 PPM

AS DETERMINED MOISTURE: 0.07 %

DISTRIBUTION:
TSENG
LOCKE

Approved for transmittal _____

CONSOL ENERGY INC.
RESEARCH & DEVELOPMENT
ANALYTICAL LABORATORY
4000 BROWNSVILLE ROAD, SOUTH PARK, PA 15129

DESCRIPTION *ESP HOPPER ASH 1A41*
TEST4
DATE SAMPLED *08/19/04*
SAMPLE NUMBER *ESP ASH 4A41*

DATE LOGGED *08/25/04*
DATE COMPLETED *09/10/04*
PROJECT NUMBER *1621-87 -*
ANALYTICAL NUMBER **044200**

ANALYSIS REPORT

PROXIMATE	(Dry)%
Ash	98.64
Total Sulfur	0.36

MISC. (As Det.)	
Hg	0.006 PPM

ULTIMATE	(Dry)%
Carbon	0.77
Ash	98.64

MAJOR ASH ELEM	(Dry)%
SiO2	48.66
Al2O3	21.42
TiO2	1.10
Fe2O3	21.65
CaO	2.02
MgO	0.97
Na2O	0.32
K2O	2.66
P2O5	0.24
SO3	0.91
UND	0.05

AS DETERMINED MOISTURE: 0.12 %

DISTRIBUTION:
TSENG
LOCKE

Approved for transmittal _____

CONSOL ENERGY INC.
RESEARCH & DEVELOPMENT
ANALYTICAL LABORATORY
4000 BROWNSVILLE ROAD, SOUTH PARK, PA 15129

DESCRIPTION *ESP HOPPER ASH 1A12 TEST4*
DATE SAMPLED *08/19/04*
SAMPLE NUMBER *ESP ASH 4A12*

DATE LOGGED *08/25/04*
DATE COMPLETED *09/10/04*
PROJECT NUMBER *1621-87 -*
ANALYTICAL NUMBER **044201**

ANALYSIS REPORT

PROXIMATE	(Dry)%
Ash	98.40
Total Sulfur	0.39

ULTIMATE	(Dry)%
Carbon	0.99
Ash	98.40

MAJOR ASH ELEM	(Dry)%
SiO2	49.85
Al2O3	22.20
TiO2	1.13
Fe2O3	19.76
CaO	1.77
MgO	1.04
Na2O	0.32
K2O	3.03
P2O5	0.34
SO3	0.98
UND	-0.42

MISC. (As Det.)

Hg 0.022 PPM

AS DETERMINED MOISTURE: 0.19 %

DISTRIBUTION:
TSENG
LOCKE

Approved for transmittal _____

CONSOL ENERGY INC.
RESEARCH & DEVELOPMENT
ANALYTICAL LABORATORY
4000 BROWNSVILLE ROAD, SOUTH PARK, PA 15129

DESCRIPTION *ESP HOPPER ASH 1A22 TEST4*
DATE SAMPLED *08/19/04*
SAMPLE NUMBER *ESP ASH 4A22*

DATE LOGGED *08/25/04*
DATE COMPLETED *09/10/04*
PROJECT NUMBER *1621-87 -*
ANALYTICAL NUMBER 044202

ANALYSIS REPORT

PROXIMATE	(Dry)%
Ash	98.62
Total Sulfur	0.33

ULTIMATE	(Dry)%
Carbon	0.90
Ash	98.62

MAJOR ASH ELEM	(Dry)%
SiO2	48.74
Al2O3	21.28
TiO2	1.10
Fe2O3	21.10
CaO	1.88
MgO	1.00
Na2O	0.28
K2O	2.69
P2O5	0.27
SO3	0.82
UND	0.84

MISC. (As Det.)

Hg 0.018 PPM

AS DETERMINED MOISTURE: 0.07 %

DISTRIBUTION:
TSENG
LOCKE

Approved for transmittal _____

CONSOL ENERGY INC.
RESEARCH & DEVELOPMENT
ANALYTICAL LABORATORY
4000 BROWNSVILLE ROAD, SOUTH PARK, PA 15129

DESCRIPTION *ESP HOPPER ASH 1A32 TEST4*
DATE SAMPLED *08/19/04*
SAMPLE NUMBER *ESP ASH 4A32*

DATE LOGGED *08/25/04*
DATE COMPLETED *09/10/04*
PROJECT NUMBER *1621-87 -*
ANALYTICAL NUMBER **044203**

ANALYSIS REPORT

PROXIMATE	(Dry)%
Ash	98.37
Total Sulfur	0.37

ULTIMATE	(Dry)%
Carbon	1.05
Ash	98.37

MAJOR ASH ELEM	(Dry)%
SiO2	49.31
Al2O3	21.48
TiO2	1.11
Fe2O3	20.60
CaO	1.85
MgO	1.02
Na2O	0.28
K2O	2.68
P2O5	0.32
SO3	0.92
UND	0.43

MISC. (As Det.)

Hg 0.011 PPM

AS DETERMINED MOISTURE: 0.10 %

DISTRIBUTION:
TSENG
LOCKE

Approved for transmittal _____

CONSOL ENERGY INC.
RESEARCH & DEVELOPMENT
ANALYTICAL LABORATORY
4000 BROWNSVILLE ROAD, SOUTH PARK, PA 15129

DESCRIPTION *ESP HOPPER ASH 1A42 TEST4*
DATE SAMPLED *08/19/04*
SAMPLE NUMBER *ESP ASH 4A42*

DATE LOGGED *08/25/04*
DATE COMPLETED *09/10/04*
PROJECT NUMBER *1621-87 -*
ANALYTICAL NUMBER **044204**

ANALYSIS REPORT

PROXIMATE	(Dry)%
Ash	98.41
Total Sulfur	0.37

ULTIMATE	(Dry)%
Carbon	0.99
Ash	98.41

MAJOR ASH ELEM	(Dry)%
SiO2	49.35
Al2O3	21.83
TiO2	1.12
Fe2O3	20.21
CaO	1.86
MgO	1.02
Na2O	0.31
K2O	2.85
P2O5	0.32
SO3	0.93
UND	0.20

MISC. (As Det.)

Hg 0.006 PPM

AS DETERMINED MOISTURE: 0.03 %

DISTRIBUTION:
TSENG
LOCKE

Approved for transmittal _____

CONSOL ENERGY INC.
RESEARCH & DEVELOPMENT
ANALYTICAL LABORATORY
4000 BROWNSVILLE ROAD, SOUTH PARK, PA 15129

DESCRIPTION *ESP HOPPER ASH 1A13 TEST4*
DATE SAMPLED *08/19/04*
SAMPLE NUMBER *ESP ASH 4A13*

DATE LOGGED *08/25/04*
DATE COMPLETED *09/10/04*
PROJECT NUMBER *1621-87 -*
ANALYTICAL NUMBER **044205**

ANALYSIS REPORT

PROXIMATE	(Dry)%
Ash	98.11
Total Sulfur	0.53

ULTIMATE	(Dry)%
Carbon	0.87
Ash	98.11

MAJOR ASH ELEM	(Dry)%
SiO2	49.92
Al2O3	22.62
TiO2	1.13
Fe2O3	17.64
CaO	1.99
MgO	1.06
Na2O	0.39
K2O	3.08
P2O5	0.39
SO3	1.32
UND	0.46

MISC. (As Det.)

Hg 0.029 PPM

AS DETERMINED MOISTURE: 0.22 %

DISTRIBUTION:
TSENG
LOCKE

Approved for transmittal _____

CONSOL ENERGY INC.
RESEARCH & DEVELOPMENT
ANALYTICAL LABORATORY
4000 BROWNSVILLE ROAD, SOUTH PARK, PA 15129

DESCRIPTION *ESP HOPPER ASH 1A23 TEST4*
DATE SAMPLED *08/19/04*
SAMPLE NUMBER *ESP ASH 4A23*

DATE LOGGED *08/25/04*
DATE COMPLETED *09/10/04*
PROJECT NUMBER *1621-87 -*
ANALYTICAL NUMBER 044206

ANALYSIS REPORT

PROXIMATE	(Dry)%
Ash	97.97
Total Sulfur	0.46

ULTIMATE	(Dry)%
Carbon	1.16
Ash	97.97

MAJOR ASH ELEM	(Dry)%
SiO2	49.00
Al2O3	21.90
TiO2	1.09
Fe2O3	20.08
CaO	1.90
MgO	1.02
Na2O	0.33
K2O	2.92
P2O5	0.34
SO3	1.15
UND	0.27

MISC. (As Det.)

Hg 0.025 PPM

AS DETERMINED MOISTURE: 0.12 %

DISTRIBUTION:
TSENG
LOCKE

Approved for transmittal _____

CONSOL ENERGY INC.
RESEARCH & DEVELOPMENT
ANALYTICAL LABORATORY
4000 BROWNSVILLE ROAD, SOUTH PARK, PA 15129

DESCRIPTION *ESP HOPPER ASH 1A33 TEST4*
DATE SAMPLED *08/19/04*
SAMPLE NUMBER *ESP ASH 4A33*

DATE LOGGED *08/25/04*
DATE COMPLETED *09/10/04*
PROJECT NUMBER *1621-87 -*
ANALYTICAL NUMBER **044207**

ANALYSIS REPORT

PROXIMATE	(Dry)%
Ash	98.03
Total Sulfur	0.48

ULTIMATE	(Dry)%
Carbon	1.02
Ash	98.03

MAJOR ASH ELEM	(Dry)%
SiO2	48.80
Al2O3	21.81
TiO2	1.12
Fe2O3	19.53
CaO	1.95
MgO	1.02
Na2O	0.32
K2O	2.86
P2O5	0.35
SO3	1.19
UND	1.05

MISC. (As Det.)

Hg 0.012 PPM

AS DETERMINED MOISTURE: 0.22 %

DISTRIBUTION:
TSENG
LOCKE

Approved for transmittal _____

CONSOL ENERGY INC.
RESEARCH & DEVELOPMENT
ANALYTICAL LABORATORY
4000 BROWNSVILLE ROAD, SOUTH PARK, PA 15129

DESCRIPTION *ESP HOPPER ASH 1A43 TEST4*
DATE SAMPLED *08/19/04*
SAMPLE NUMBER *ESP ASH 4A43*

DATE LOGGED *08/25/04*
DATE COMPLETED *09/10/04*
PROJECT NUMBER *1621-87 -*
ANALYTICAL NUMBER 044208

ANALYSIS REPORT

PROXIMATE	(Dry)%
Ash	98.10
Total Sulfur	0.49

ULTIMATE	(Dry)%
Carbon	0.98
Ash	98.10

MAJOR ASH ELEM	(Dry)%
SiO2	48.75
Al2O3	21.64
TiO2	1.11
Fe2O3	18.89
CaO	1.87
MgO	1.03
Na2O	0.33
K2O	2.83
P2O5	0.35
SO3	1.22
UND	1.98

MISC. (As Det.)

Hg 0.008 PPM

AS DETERMINED MOISTURE: 0.13 %

DISTRIBUTION:
TSENG
LOCKE

Approved for transmittal _____

CONSOL ENERGY INC.
RESEARCH & DEVELOPMENT
ANALYTICAL LABORATORY
4000 BROWNSVILLE ROAD, SOUTH PARK, PA 15129

DESCRIPTION *ESP HOPPER ASH 1A14*
TEST4
DATE SAMPLED *08/19/04*
SAMPLE NUMBER *ESP ASH 4A14*

DATE LOGGED *08/25/04*
DATE COMPLETED *09/15/04*
PROJECT NUMBER *1621-87 -*
ANALYTICAL NUMBER **044209**

ANALYSIS REPORT

PROXIMATE	(Dry)%
Ash	97.48
Total Sulfur	0.58

ULTIMATE	(Dry)%
Carbon	1.25
Ash	97.48

MAJOR ASH ELEM	(Dry)%
SiO2	48.66
Al2O3	22.45
TiO2	1.14
Fe2O3	19.89
CaO	1.95
MgO	1.03
Na2O	0.32
K2O	2.83
P2O5	0.36
SO3	1.45
UND	-0.08

MISC. (As Det.)

Hg 0.038 PPM

AS DETERMINED MOISTURE: 0.38 %

DISTRIBUTION:
TSENG
LOCKE

Approved for transmittal _____

CONSOL ENERGY INC.
RESEARCH & DEVELOPMENT
ANALYTICAL LABORATORY
4000 BROWNSVILLE ROAD, SOUTH PARK, PA 15129

DESCRIPTION *ESP HOPPER ASH 1A24 TEST4*
DATE SAMPLED *08/19/04*
SAMPLE NUMBER *ESP ASH 4A24*

DATE LOGGED *08/25/04*
DATE COMPLETED *09/15/04*
PROJECT NUMBER *1621-87 -*
ANALYTICAL NUMBER 044210

ANALYSIS REPORT

PROXIMATE	(Dry)%
Ash	97.89
Total Sulfur	0.42

ULTIMATE	(Dry)%
Carbon	1.37
Ash	97.89

MAJOR ASH ELEM	(Dry)%
SiO2	48.37
Al2O3	21.77
TiO2	1.05
Fe2O3	21.97
CaO	1.94
MgO	0.99
Na2O	0.30
K2O	2.78
P2O5	0.26
SO3	1.04
UND	-0.47

MISC. (As Det.)

Hg 0.032 PPM

AS DETERMINED MOISTURE: 0.13 %

DISTRIBUTION:
TSENG
LOCKE

Approved for transmittal _____

CONSOL ENERGY INC.
RESEARCH & DEVELOPMENT
ANALYTICAL LABORATORY
4000 BROWNSVILLE ROAD, SOUTH PARK, PA 15129

DESCRIPTION *ESP HOPPER ASH 1A34 TEST4*
DATE SAMPLED *08/19/04*
SAMPLE NUMBER *ESP ASH 4A34*

DATE LOGGED *08/25/04*
DATE COMPLETED *09/15/04*
PROJECT NUMBER *1621-87 -*
ANALYTICAL NUMBER **044211**

ANALYSIS REPORT

PROXIMATE	(Dry)%
Ash	97.75
Total Sulfur	0.56

ULTIMATE	(Dry)%
Carbon	1.12
Ash	97.75

MAJOR ASH ELEM	(Dry)%
SiO2	49.26
Al2O3	23.01
TiO2	1.14
Fe2O3	19.57
CaO	1.87
MgO	1.07
Na2O	0.33
K2O	2.98
P2O5	0.38
SO3	1.41
UND	-1.02

MISC. (As Det.)

Hg 0.014 PPM

AS DETERMINED MOISTURE: 0.06 %

DISTRIBUTION:
TSENG
LOCKE

Approved for transmittal _____

CONSOL ENERGY INC.
RESEARCH & DEVELOPMENT
ANALYTICAL LABORATORY
4000 BROWNSVILLE ROAD, SOUTH PARK, PA 15129

DESCRIPTION *ESP HOPPER ASH 1A44 TEST4*
DATE SAMPLED *08/19/04*
SAMPLE NUMBER *ESP ASH 4A44*

DATE LOGGED *08/25/04*
DATE COMPLETED *09/15/04*
PROJECT NUMBER *1621-87 -*
ANALYTICAL NUMBER 044212

ANALYSIS REPORT

PROXIMATE	(Dry)%
Ash	97.65
Total Sulfur	0.60

ULTIMATE	(Dry)%
Carbon	1.14
Ash	97.65

MAJOR ASH ELEM	(Dry)%
SiO2	48.44
Al2O3	22.37
TiO2	1.13
Fe2O3	19.33
CaO	1.88
MgO	1.07
Na2O	0.33
K2O	2.79
P2O5	0.38
SO3	1.49
UND	0.79

MISC. (As Det.)

Hg 0.011 PPM

AS DETERMINED MOISTURE: 0.16 %

DISTRIBUTION:
TSENG
LOCKE

Approved for transmittal _____

CONSOL ENERGY INC.
RESEARCH & DEVELOPMENT
ANALYTICAL LABORATORY
4000 BROWNSVILLE ROAD, SOUTH PARK, PA 15129

DESCRIPTION *ESP HOPPER ASH 1A15 TEST4*
DATE SAMPLED *08/19/04*
SAMPLE NUMBER *ESP ASH 4A15*

DATE LOGGED *08/25/04*
DATE COMPLETED *09/15/04*
PROJECT NUMBER *1621-87 -*
ANALYTICAL NUMBER 044213

ANALYSIS REPORT

PROXIMATE	(Dry)%
Ash	96.72
Total Sulfur	0.66

ULTIMATE	(Dry)%
Carbon	1.75
Ash	96.72

MAJOR ASH ELEM	(Dry)%
SiO2	47.43
Al2O3	21.70
TiO2	1.11
Fe2O3	20.16
CaO	1.91
MgO	1.02
Na2O	0.32
K2O	2.93
P2O5	0.28
SO3	1.66
UND	1.48

MISC. (As Det.)

Hg 0.048 PPM

AS DETERMINED MOISTURE: 0.34 %

DISTRIBUTION:
TSENG
LOCKE

Approved for transmittal _____

CONSOL ENERGY INC.
RESEARCH & DEVELOPMENT
ANALYTICAL LABORATORY
4000 BROWNSVILLE ROAD, SOUTH PARK, PA 15129

DESCRIPTION *ESP HOPPER ASH #1A25*
TEST 4
DATE SAMPLED *08/19/04*
SAMPLE NUMBER *ESP ASH-4A25*

DATE LOGGED *08/25/04*
DATE COMPLETED *09/15/04*
PROJECT NUMBER *1621-87 -*
ANALYTICAL NUMBER **044214**

ANALYSIS REPORT

PROXIMATE	(Dry)%
Ash	97.44
Total Sulfur	0.38

MISC. (As Det.)	
Hg	0.050 PPM

ULTIMATE	(Dry)%
Carbon	2.04
Ash	97.44

MAJOR ASH ELEM	(Dry)%
SiO2	47.64
Al2O3	21.17
TiO2	1.02
Fe2O3	22.41
CaO	1.92
MgO	0.98
Na2O	0.28
K2O	2.67
P2O5	0.20
SO3	0.94
UND	0.77

AS DETERMINED MOISTURE: 0.14 %

DISTRIBUTION:
TSENG
LOCKE

Approved for transmittal _____

CONSOL ENERGY INC.
RESEARCH & DEVELOPMENT
ANALYTICAL LABORATORY
4000 BROWNSVILLE ROAD, SOUTH PARK, PA 15129

DESCRIPTION *ESP HOPPER ASH #1A35*
TEST 4
DATE SAMPLED *08/19/04*
SAMPLE NUMBER *ESP ASH-4A35*

DATE LOGGED *08/25/04*
DATE COMPLETED *09/15/04*
PROJECT NUMBER *1621-87 -*
ANALYTICAL NUMBER **044215**

ANALYSIS REPORT

PROXIMATE	(Dry)%
Ash	96.83
Total Sulfur	0.40

ULTIMATE	(Dry)%
Carbon	2.25
Ash	96.83

MAJOR ASH ELEM	(Dry)%
SiO2	48.62
Al2O3	21.76
TiO2	1.04
Fe2O3	21.68
CaO	1.92
MgO	0.98
Na2O	0.27
K2O	2.65
P2O5	0.21
SO3	0.99
UND	-0.12

MISC. (As Det.)

Hg 0.048 PPM

AS DETERMINED MOISTURE: 0.17 %

DISTRIBUTION:
TSENG
LOCKE

Approved for transmittal _____

CONSOL ENERGY INC.
RESEARCH & DEVELOPMENT
ANALYTICAL LABORATORY
4000 BROWNSVILLE ROAD, SOUTH PARK, PA 15129

DESCRIPTION *ESP HOPPER ASH #1A45*
TEST 4
DATE SAMPLED *08/19/04*
SAMPLE NUMBER *ESP ASH-4A45*

DATE LOGGED *08/25/04*
DATE COMPLETED *09/15/04*
PROJECT NUMBER *1621-87 -*
ANALYTICAL NUMBER 044216

ANALYSIS REPORT

PROXIMATE	(Dry)%
Ash	96.89
Total Sulfur	0.69

ULTIMATE	(Dry)%
Carbon	1.46
Ash	96.89

MAJOR ASH ELEM	(Dry)%
SiO2	48.90
Al2O3	22.62
TiO2	1.11
Fe2O3	19.73
CaO	2.05
MgO	1.03
Na2O	0.33
K2O	2.77
P2O5	0.34
SO3	1.73
UND	-0.61

MISC. (As Det.)

Hg 0.011 PPM

AS DETERMINED MOISTURE: 0.17 %

DISTRIBUTION:
TSENG
LOCKE

Approved for transmittal _____

CONSOL ENERGY INC.
RESEARCH & DEVELOPMENT
ANALYTICAL LABORATORY
4000 BROWNSVILLE ROAD, SOUTH PARK, PA 15129

DESCRIPTION *FGD SLURRY SOLIDS TEST 1*
DATE SAMPLED *08/17/04*
SAMPLE NUMBER *FGDS-1-A*

DATE LOGGED *08/25/04*
DATE COMPLETED *09/28/04*
PROJECT NUMBER *1621-087-*
ANALYTICAL NUMBER **044152**

ANALYSIS REPORT

PROXIMATE	(Dry)%
Ash	93.91
Total Sulfur	19.77

MISC. (As Det.)	
Hg	0.303 PPM
%SOLIDS	10.6
DENSITY	1.050

ULTIMATE	(Dry)%
Carbon	0.52
Chlorine	0.040
Ash	93.91

MAJOR ASH ELEM	(Dry)%
SiO2	2.45
Al2O3	0.63
TiO2	0.02
Fe2O3	0.40
CaO	38.13
MgO	0.48
Na2O	0.01
K2O	0.13
P2O5	<0.00
SO3	49.42
UND	8.33

AS DETERMINED MOISTURE: <0.01 %

DISTRIBUTION:
TSENG
LOCKE

Approved for transmittal _____

CONSOL ENERGY INC.
RESEARCH & DEVELOPMENT
ANALYTICAL LABORATORY
4000 BROWNSVILLE ROAD, SOUTH PARK, PA 15129

DESCRIPTION *FGD SLURRY SOLIDS TEST 1*
DATE SAMPLED *08/17/04*
SAMPLE NUMBER *FGDS-1-B*

DATE LOGGED *08/25/04*
DATE COMPLETED *09/28/04*
PROJECT NUMBER *1621-087-*
ANALYTICAL NUMBER **044153**

ANALYSIS REPORT

PROXIMATE	(Dry)%
Ash	95.13
Total Sulfur	19.78

MISC. (As Det.)	
Hg	0.312 PPM
%SOLIDS	10.2
DENSITY	1.042

ULTIMATE	(Dry)%
Carbon	0.39
Chlorine	0.018
Ash	95.13

MAJOR ASH ELEM	(Dry)%
SiO2	3.00
Al2O3	0.84
TiO2	0.03
Fe2O3	0.54
CaO	38.51
MgO	0.56
Na2O	0.01
K2O	0.17
P2O5	<0.00
SO3	49.45
UND	6.89

AS DETERMINED MOISTURE: <0.01 %

DISTRIBUTION:
TSENG
LOCKE

Approved for transmittal _____

CONSOL ENERGY INC.
RESEARCH & DEVELOPMENT
ANALYTICAL LABORATORY
4000 BROWNSVILLE ROAD, SOUTH PARK, PA 15129

DESCRIPTION *FGD SLURRY SOLIDS TEST 2*
DATE SAMPLED *08/18/04*
SAMPLE NUMBER *FGDS-2-A*

DATE LOGGED *08/25/04*
DATE COMPLETED *09/28/04*
PROJECT NUMBER *1621-87 -*
ANALYTICAL NUMBER 044154

ANALYSIS REPORT

PROXIMATE	(Dry)%
Ash	93.47
Total Sulfur	19.70

MISC. (As Det.)	
Hg	0.190 PPM
%SOLIDS	9.1
DENSITY	1.041

ULTIMATE	(Dry)%
Carbon	0.37
Chlorine	0.017
Ash	93.47

MAJOR ASH ELEM	(Dry)%
SiO2	2.34
Al2O3	0.66
TiO2	0.03
Fe2O3	0.39
CaO	37.87
MgO	0.44
Na2O	0.01
K2O	0.14
P2O5	<0.00
SO3	49.25
UND	8.87

AS DETERMINED MOISTURE: 0.01 %

DISTRIBUTION:
TSENG
LOCKE

Approved for transmittal _____

CONSOL ENERGY INC.
RESEARCH & DEVELOPMENT
ANALYTICAL LABORATORY
4000 BROWNSVILLE ROAD, SOUTH PARK, PA 15129

DESCRIPTION *FGD SLURRY SOLIDS TEST 2*
DATE SAMPLED *08/18/04*
SAMPLE NUMBER *FGDS-2-B*

DATE LOGGED *08/25/04*
DATE COMPLETED *09/28/04*
PROJECT NUMBER *1621-87 -*
ANALYTICAL NUMBER 044155

ANALYSIS REPORT

PROXIMATE	(Dry)%
Ash	92.63
Total Sulfur	19.66

MISC. (As Det.)	
Hg	0.274 PPM
%SOLIDS	7.6
DENSITY	1.036

ULTIMATE	(Dry)%
Carbon	0.45
Chlorine	0.024
Ash	92.63

MAJOR ASH ELEM	(Dry)%
SiO2	2.94
Al2O3	0.85
TiO2	0.03
Fe2O3	0.48
CaO	38.09
MgO	0.53
Na2O	
K2O	0.16
P2O5	<0.00
SO3	49.14
UND	7.78

AS DETERMINED MOISTURE: 0.01 %

DISTRIBUTION:
TSENG
LOCKE

Approved for transmittal _____

CONSOL ENERGY INC.
RESEARCH & DEVELOPMENT
ANALYTICAL LABORATORY
4000 BROWNSVILLE ROAD, SOUTH PARK, PA 15129

DESCRIPTION *FGD SLURRY SOLIDS TEST 3*
DATE SAMPLED *08/18/04*
SAMPLE NUMBER *FGDS-3-A*

DATE LOGGED *08/25/04*
DATE COMPLETED *09/28/04*
PROJECT NUMBER *1621-87 -*
ANALYTICAL NUMBER 044156

ANALYSIS REPORT

PROXIMATE	(Dry)%
Ash	93.84
Total Sulfur	20.26

MISC. (As Det.)	
Hg	0.424 PPM
%SOLIDS	10.8
DENSITY	1.045

ULTIMATE	(Dry)%
Carbon	0.50
Chlorine	0.017
Ash	93.84

MAJOR ASH ELEM	(Dry)%
SiO2	2.13
Al2O3	0.58
TiO2	0.02
Fe2O3	0.38
CaO	39.02
MgO	0.40
Na2O	
K2O	0.12
P2O5	<0.00
SO3	50.66
UND	6.69

AS DETERMINED MOISTURE: 0.01 %

DISTRIBUTION:
TSENG
LOCKE

Approved for transmittal _____

CONSOL ENERGY INC.
RESEARCH & DEVELOPMENT
ANALYTICAL LABORATORY
4000 BROWNSVILLE ROAD, SOUTH PARK, PA 15129

DESCRIPTION *FGD SLURRY SOLIDS TEST 3*
DATE SAMPLED *08/18/04*
SAMPLE NUMBER *FGDS-3-B*

DATE LOGGED *08/25/04*
DATE COMPLETED *09/28/04*
PROJECT NUMBER *1621-87 -*
ANALYTICAL NUMBER 044157

ANALYSIS REPORT

PROXIMATE	(Dry)%
Ash	94.48
Total Sulfur	20.23

MISC. (As Det.)	
Hg	0.413 PPM
%SOLIDS	10.7
DENSITY	1.040

ULTIMATE	(Dry)%
Carbon	0.37
Chlorine	0.015
Ash	94.48

MAJOR ASH ELEM	(Dry)%
SiO2	1.74
Al2O3	0.49
TiO2	0.02
Fe2O3	0.32
CaO	38.70
MgO	0.35
Na2O	
K2O	0.11
P2O5	<0.00
SO3	50.58
UND	7.69

AS DETERMINED MOISTURE: 0.01 %

DISTRIBUTION:
TSENG
LOCKE

Approved for transmittal _____

CONSOL ENERGY INC.
RESEARCH & DEVELOPMENT
ANALYTICAL LABORATORY
4000 BROWNSVILLE ROAD, SOUTH PARK, PA 15129

DESCRIPTION *FGD SLURRY SOLIDS TEST 4*
DATE SAMPLED *08/19/04*
SAMPLE NUMBER *FGDS-4-A*

DATE LOGGED *08/25/04*
DATE COMPLETED *09/28/04*
PROJECT NUMBER *1621-87 -*
ANALYTICAL NUMBER 044158

ANALYSIS REPORT

PROXIMATE	(Dry)%
Ash	93.96
Total Sulfur	20.47

MISC. (As Det.)	
Hg	0.231 PPM
%SOLIDS	11.0
DENSITY	1.043

ULTIMATE	(Dry)%
Carbon	0.46
Chlorine	0.017
Ash	93.96

MAJOR ASH ELEM	(Dry)%
SiO2	1.56
Al2O3	0.44
TiO2	0.02
Fe2O3	0.31
CaO	39.00
MgO	0.33
Na2O	
K2O	0.09
P2O5	<0.00
SO3	51.17
UND	7.08

AS DETERMINED MOISTURE: 0.01 %

DISTRIBUTION:
TSENG
LOCKE

Approved for transmittal _____

CONSOL ENERGY INC.
RESEARCH & DEVELOPMENT
ANALYTICAL LABORATORY
4000 BROWNSVILLE ROAD, SOUTH PARK, PA 15129

DESCRIPTION *FGD SLURRY SOLIDS TEST 4*
DATE SAMPLED *08/19/04*
SAMPLE NUMBER *FGDS-4-B*

DATE LOGGED *08/25/04*
DATE COMPLETED *09/28/04*
PROJECT NUMBER *1621-87 -*
ANALYTICAL NUMBER 044159

ANALYSIS REPORT

PROXIMATE	(Dry)%
Ash	93.94
Total Sulfur	20.40

MISC. (As Det.)	
Hg	0.385 PPM
%SOLIDS	10.4
DENSITY	1.044

ULTIMATE	(Dry)%
Carbon	0.47
Chlorine	0.020
Ash	93.94

MAJOR ASH ELEM	(Dry)%
SiO2	1.69
Al2O3	0.47
TiO2	0.02
Fe2O3	0.33
CaO	39.03
MgO	0.36
Na2O	
K2O	0.10
P2O5	<0.00
SO3	51.00
UND	7.00

AS DETERMINED MOISTURE: 0.01 %

DISTRIBUTION:
TSENG
LOCKE

Approved for transmittal _____

CONSOL ENERGY INC.
RESEARCH & DEVELOPMENT
ANALYTICAL LABORATORY
4000 BROWNSVILLE ROAD, SOUTH PARK, PA 15129

DESCRIPTION *FGD SLURRY SOLIDS A-SIDE TEST 1*
DATE SAMPLED *11/05/04*
SAMPLE NUMBER *1-A*

DATE LOGGED *11/09/04*
DATE COMPLETED *12/03/04*
PROJECT NUMBER *1621-87 -1*
ANALYTICAL NUMBER **045584**

ANALYSIS REPORT

PROXIMATE	(Dry)%
Ash	96.90
Total Sulfur	21.53

MISC. (As Det.)	
Hg	0.322
% SOLIDS	13.2
DENSITY	1.061

ULTIMATE	(Dry)%
Carbon	0.59
Chlorine	0.020
Ash	96.90

MAJOR ASH ELEM	(Dry)%
SiO2	3.03
Al2O3	0.64
TiO2	0.02
Fe2O3	0.46
CaO	43.08
MgO	0.69
Na2O	0.02
K2O	0.15
P2O5	<0.00
SO3	53.83
UND	-1.92

AS DETERMINED MOISTURE: 6.26 %

DISTRIBUTION:
S. TSENG
J. WITHUM
J. LOCKE

Approved for transmittal _____

CONSOL ENERGY INC.
RESEARCH & DEVELOPMENT
ANALYTICAL LABORATORY
4000 BROWNSVILLE ROAD, SOUTH PARK, PA 15129

DESCRIPTION *FGD SLURRY SOLIDS B-SIDE TEST 1*
DATE SAMPLED *11/05/04*
SAMPLE NUMBER *1-B*

DATE LOGGED *11/09/04*
DATE COMPLETED *12/03/04*
PROJECT NUMBER *1621-87 -1*
ANALYTICAL NUMBER **045585**

ANALYSIS REPORT

PROXIMATE	(Dry)%
Ash	95.97
Total Sulfur	20.91

MISC. (As Det.)	
Hg	0.246
% SOLIDS	13.3
DENSITY	1.046

ULTIMATE	(Dry)%
Carbon	0.83
Chlorine	0.014
Ash	95.97

MAJOR ASH ELEM	(Dry)%
SiO2	2.88
Al2O3	0.65
TiO2	0.02
Fe2O3	0.47
CaO	43.42
MgO	0.65
Na2O	0.02
K2O	0.13
P2O5	<0.00
SO3	52.28
UND	-0.52

AS DETERMINED MOISTURE: 6.22 %

DISTRIBUTION:
S. TSENG
J. WITHUM
J. LOCKE

Approved for transmittal _____

CONSOL ENERGY INC.
RESEARCH & DEVELOPMENT
ANALYTICAL LABORATORY
4000 BROWNSVILLE ROAD, SOUTH PARK, PA 15129

DESCRIPTION *FGD SLURRY SOLIDS A-SIDE TEST 2*
DATE SAMPLED *11/05/04*
SAMPLE NUMBER *2-A*

DATE LOGGED *11/09/04*
DATE COMPLETED *12/03/04*
PROJECT NUMBER *1621-87 -1*
ANALYTICAL NUMBER **045586**

ANALYSIS REPORT

PROXIMATE	(Dry)%
Ash	96.96
Total Sulfur	21.17

MISC. (As Det.)	
Hg	0.415
% SOLIDS	12.5
DENSITY	1.036

ULTIMATE	(Dry)%
Carbon	0.61
Chlorine	0.013
Ash	96.96

MAJOR ASH ELEM	(Dry)%
SiO2	3.38
Al2O3	0.75
TiO2	0.02
Fe2O3	0.51
CaO	42.42
MgO	0.78
Na2O	0.02
K2O	0.17
P2O5	<0.00
SO3	52.93
UND	-0.98

AS DETERMINED MOISTURE: 6.58 %

DISTRIBUTION:
S. TSENG
J. WITHUM
J. LOCKE

Approved for transmittal _____

CONSOL ENERGY INC.
RESEARCH & DEVELOPMENT
ANALYTICAL LABORATORY
4000 BROWNSVILLE ROAD, SOUTH PARK, PA 15129

DESCRIPTION *FGD SLURRY SOLIDS B-SIDE TEST 2*
DATE SAMPLED *11/05/04*
SAMPLE NUMBER *2-B*

DATE LOGGED *11/09/04*
DATE COMPLETED *12/03/04*
PROJECT NUMBER *1621-87 -1*
ANALYTICAL NUMBER **045587**

ANALYSIS REPORT

PROXIMATE	(Dry)%
Ash	94.38
Total Sulfur	18.92

MISC. (As Det.)	
Hg	0.506
% SOLIDS	7.0
DENSITY	1.030

ULTIMATE	(Dry)%
Carbon	1.22
Chlorine	0.015
Ash	94.38

MAJOR ASH ELEM	(Dry)%
SiO2	5.51
Al2O3	1.33
TiO2	0.05
Fe2O3	0.88
CaO	40.18
MgO	1.23
Na2O	0.03
K2O	0.27
P2O5	<0.00
SO3	47.30
UND	3.22

AS DETERMINED MOISTURE: 9.01 %

DISTRIBUTION:
S. TSENG
J. WITHUM
J. LOCKE

Approved for transmittal _____

CONSOL ENERGY INC.
RESEARCH & DEVELOPMENT
ANALYTICAL LABORATORY
4000 BROWNSVILLE ROAD, SOUTH PARK, PA 15129

DESCRIPTION *FGD SLURRY SOLIDS A-SIDE TEST 3*
DATE SAMPLED *11/05/04*
SAMPLE NUMBER *3-A*

DATE LOGGED *11/09/04*
DATE COMPLETED *12/03/04*
PROJECT NUMBER *1621-87 -1*
ANALYTICAL NUMBER 045588

ANALYSIS REPORT

PROXIMATE	(Dry)%
Ash	96.42
Total Sulfur	21.36

MISC. (As Det.)	
Hg	0.355 PPM
% SOLIDS	13.3
DENSITY	1.021

ULTIMATE	(Dry)%
Carbon	0.54
Chlorine	0.011
Ash	96.42

MAJOR ASH ELEM	(Dry)%
SiO2	3.03
Al2O3	0.67
TiO2	0.02
Fe2O3	0.46
CaO	42.14
MgO	0.71
Na2O	0.01
K2O	0.15
P2O5	<0.00
SO3	53.41
UND	-0.60

AS DETERMINED MOISTURE: 15.29 %

DISTRIBUTION:
S. TSENG
J. WITHUM
J. LOCKE

Approved for transmittal _____

CONSOL ENERGY INC.
RESEARCH & DEVELOPMENT
ANALYTICAL LABORATORY
4000 BROWNSVILLE ROAD, SOUTH PARK, PA 15129

DESCRIPTION *FGD SLURRY SOLIDS B-SIDE TEST 3*
DATE SAMPLED *11/05/04*
SAMPLE NUMBER *3-B*

DATE LOGGED *11/09/04*
DATE COMPLETED *12/03/04*
PROJECT NUMBER *1621-87 -1*
ANALYTICAL NUMBER **045589**

ANALYSIS REPORT

PROXIMATE	(Dry)%
Ash	96.21
Total Sulfur	21.32

MISC. (As Det.)	
Hg	0.229
% SOLIDS	15.0
DENSITY	1.021

ULTIMATE	(Dry)%
Carbon	0.73
Chlorine	0.006
Ash	96.21

MAJOR ASH ELEM	(Dry)%
SiO2	2.66
Al2O3	0.60
TiO2	0.02
Fe2O3	0.43
CaO	42.49
MgO	0.62
Na2O	0.01
K2O	0.12
P2O5	<0.00
SO3	53.30
UND	-0.25

AS DETERMINED MOISTURE: 16.01 %

DISTRIBUTION:
S. TSENG
J. WITHUM
J. LOCKE

Approved for transmittal _____

CONSOL ENERGY INC.
RESEARCH & DEVELOPMENT
ANALYTICAL LABORATORY
SOUTH PARK, PENNSYLVANIA 15129

TO: JAW/SCT/JEL

PROJECT NUMBER 1621-87 -

DATE LOGGED 08/25/04
DATE COMPLETED / /

DESCRIPTION FGD SLURRY FILTRATE
COMMENTS TEST 1
SAMPLE NUMBER 1-A
ANALYTICAL NUMBER 044247

		-------- WATER ANALYSIS ---------		
ANALYSIS	UNITS	VALUE	VALUE	DUP AVG
Calcium		611		
Total Iron		0.44		
Magnesium		1970		
Potassium		114		
Sodium		264		
Ammonia as NH3	ppm	<10		
Chloride		2800		
Nitrate as N		<10		
Sulfate		6930		
MERCURY	ng/ml	29.9		

Note: All units mg/L unless specified

CONSOL ENERGY INC.
RESEARCH & DEVELOPMENT
ANALYTICAL LABORATORY
SOUTH PARK, PENNSYLVANIA 15129

TO: JAW/SCT/JEL

PROJECT NUMBER 1621-87 -

DATE LOGGED 08/25/04
DATE COMPLETED / /

DESCRIPTION FGD SLURRY FILTRATE
COMMENTS TEST 1
SAMPLE NUMBER 1-B
ANALYTICAL NUMBER 044248

		-------- WATER ANALYSIS ---------		
ANALYSIS	UNITS	VALUE	VALUE	DUP AVG
Calcium		634		
Total Iron		0.54		
Magnesium		1970		
Potassium		105		
Sodium		253		
Ammonia as NH3	ppm	<10		
Chloride		2800		
Nitrate as N		<10		
Sulfate		7180		
MERCURY	ng/ml	23.6		

Note: All units mg/L unless specified

CONSOL ENERGY INC.
RESEARCH & DEVELOPMENT
ANALYTICAL LABORATORY
SOUTH PARK, PENNSYLVANIA 15129

TO: JAW/SCT/JEL

PROJECT NUMBER 1621-87 -

DATE LOGGED 08/25/04
DATE COMPLETED / /

DESCRIPTION FGD SLURRY FILTRATE
COMMENTS TEST 2
SAMPLE NUMBER 2-A
ANALYTICAL NUMBER 044249

		WATER ANALYSIS		
ANALYSIS	UNITS	VALUE	VALUE	DUP AVG
Calcium		604		
Total Iron		0.45		
Magnesium		1830		
Potassium		127		
Sodium		283		
Ammonia as NH3	ppm	<10		
Chloride		2700		
Nitrate as N		<10		
Sulfate		6880		
MERCURY	ng/ml	28.4		

Note: All units mg/L unless specified

CONSOL ENERGY INC.
RESEARCH & DEVELOPMENT
ANALYTICAL LABORATORY
SOUTH PARK, PENNSYLVANIA 15129

TO: JAW/SCT/JEL

PROJECT NUMBER 1621-87 -

DATE LOGGED 08/25/04
DATE COMPLETED / /

DESCRIPTION FGD SLURRY FILTRATE
COMMENTS TEST 2
SAMPLE NUMBER 2-B
ANALYTICAL NUMBER 044250

		-------- WATER ANALYSIS ---------		
ANALYSIS	UNITS	VALUE	VALUE	DUP AVG
Calcium		555		
Total Iron		0.81		
Magnesium		1750		
Potassium		124		
Sodium		279		
Ammonia as NH3	ppm	<10		
Chloride		2700		
Nitrate as N		<10		
Sulfate		6630		
MERCURY	ng/ml	11.1		

Note: All units mg/L unless specified

CONSOL ENERGY INC.
RESEARCH & DEVELOPMENT
ANALYTICAL LABORATORY
SOUTH PARK, PENNSYLVANIA 15129

TO: JAW/SCT/JEL

PROJECT NUMBER 1621-87 -

DATE LOGGED 08/25/04
DATE COMPLETED / /

DESCRIPTION FGD SLURRY FILTRATE
COMMENTS TEST 3
SAMPLE NUMBER 3-A
ANALYTICAL NUMBER 044251

		-------- WATER ANALYSIS ---------		
ANALYSIS	UNITS	VALUE	VALUE	DUP AVG
Calcium		545		
Total Iron		1.10		
Magnesium		1790		
Potassium		124		
Sodium		277		
Ammonia as NH3	ppm	<10		
Chloride		2700		
Nitrate as N		<10		
Sulfate		6560		
MERCURY	ng/ml	14.1		

Note: All units mg/L unless specified

CONSOL ENERGY INC.
RESEARCH & DEVELOPMENT
ANALYTICAL LABORATORY
SOUTH PARK, PENNSYLVANIA 15129

TO: JAW/SCT/JEL

PROJECT NUMBER 1621-87 -

DATE LOGGED 08/25/04
DATE COMPLETED / /

DESCRIPTION FGD SLURRY FILTRATE
COMMENTS TEST 3
SAMPLE NUMBER 3-B
ANALYTICAL NUMBER 044252

		-------- WATER ANALYSIS ---------		
ANALYSIS	UNITS	VALUE	VALUE	DUP AVG
Calcium		553		
Total Iron		1.28		
Magnesium		1730		
Potassium		120		
Sodium		270		
Ammonia as NH3	ppm	<10		
Chloride		2650		
Nitrate as N		<10		
Sulfate		6480		

MERCURY	ng/ml	2.1

Note: All units mg/L unless specified

CONSOL ENERGY INC.
RESEARCH & DEVELOPMENT
ANALYTICAL LABORATORY
SOUTH PARK, PENNSYLVANIA 15129

TO: JAW/SCT/JEL

PROJECT NUMBER 1621-87 -

DATE LOGGED 08/25/04
DATE COMPLETED / /

DESCRIPTION FGD SLURRY FILTRATE
COMMENTS TEST 4
SAMPLE NUMBER 4-A
ANALYTICAL NUMBER 044253

		-------- WATER ANALYSIS ---------		
ANALYSIS	UNITS	VALUE	VALUE	DUP AVG
Calcium		549		
Total Iron		1.16		
Magnesium		1860		
Potassium		138		
Sodium		304		
Ammonia as NH3	ppm	<10		
Chloride		2750		
Nitrate as N		<10		
Sulfate		6910		
MERCURY	ng/ml	11.6		

Note: All units mg/L unless specified

CONSOL ENERGY INC.
RESEARCH & DEVELOPMENT
ANALYTICAL LABORATORY
SOUTH PARK, PENNSYLVANIA 15129

TO: JAW/SCT/JEL

PROJECT NUMBER 1621-87 -

DATE LOGGED 08/25/04
DATE COMPLETED / /

DESCRIPTION FGD SLURRY FILTRATE
COMMENTS TEST 4
SAMPLE NUMBER 4-B
ANALYTICAL NUMBER 044254

		-------- WATER ANALYSIS ---------		
ANALYSIS	UNITS	VALUE	VALUE	DUP AVG
Calcium		549		
Total Iron		1.14		
Magnesium		1790		
Potassium		134		
Sodium		296		
Ammonia as NH3	ppm	<10		
Chloride		2750		
Nitrate as N		<10		
Sulfate		6580		
MERCURY	ng/ml	1.8		

Note: All units mg/L unless specified

CONSOL ENERGY INC.
RESEARCH & DEVELOPMENT
ANALYTICAL LABORATORY
SOUTH PARK, PENNSYLVANIA 15129

TO: JAW/SCT/JEL

PROJECT NUMBER 1621-87 -1

DATE LOGGED 11/09/04
DATE COMPLETED / /

DESCRIPTION FGD SLURRY FILTRATE
COMMENTS TEST 1
SAMPLE NUMBER 1-A
ANALYTICAL NUMBER 045539

		-------- WATER ANALYSIS ---------		
ANALYSIS	UNITS	VALUE	VALUE	DUP AVG
Calcium		594		
Total Iron		0.57		
Magnesium		2050		
Potassium		159		
Sodium		336		
Ammonia as NH3	ppm	<10		
Chloride		3340		
Nitrate as N		25.0		
Sulfate		6600		
MERCURY	ng/ml	<1.0		

Note: All units mg/L unless specified

CONSOL ENERGY INC.
RESEARCH & DEVELOPMENT
ANALYTICAL LABORATORY
SOUTH PARK, PENNSYLVANIA 15129

TO: JAW/SCT/JEL

PROJECT NUMBER 1621-87 -1

DATE LOGGED 11/09/04
DATE COMPLETED / /

DESCRIPTION FGD SLURRY FILTRATE
COMMENTS TEST 1
SAMPLE NUMBER 1-B
ANALYTICAL NUMBER 045540

		-------- WATER ANALYSIS ---------		
ANALYSIS	UNITS	VALUE	VALUE	DUP AVG
Calcium		651		
Total Iron		<0.53		
Magnesium		2090		
Potassium		160		
Sodium		341		
Ammonia as NH3	ppm	<10		
Chloride		3150		
Nitrate as N		23.5		
Sulfate		6780		
MERCURY	ng/ml	2.2		

Note: All units mg/L unless specified

CONSOL ENERGY INC.
RESEARCH & DEVELOPMENT
ANALYTICAL LABORATORY
SOUTH PARK, PENNSYLVANIA 15129

TO: JAW/SCT/JEL

PROJECT NUMBER 1621-87 -1

DATE LOGGED 11/09/04
DATE COMPLETED / /

DESCRIPTION FGD SLURRY FILTRATE
COMMENTS TEST 2
SAMPLE NUMBER 2-A
ANALYTICAL NUMBER 045541

		-------- WATER ANALYSIS ---------		
ANALYSIS	UNITS	VALUE	VALUE	DUP AVG
Calcium		626		
Total Iron		1.30		
Magnesium		2130		
Potassium		155		
Sodium		332		
Ammonia as NH3	ppm	<10		
Chloride		3340		
Nitrate as N		17.4		
Sulfate		6880		
MERCURY	ng/ml	<1.0		

Note: All units mg/L unless specified

CONSOL ENERGY INC.
RESEARCH & DEVELOPMENT
ANALYTICAL LABORATORY
SOUTH PARK, PENNSYLVANIA 15129

TO: JAW/SCT/JEL

PROJECT NUMBER 1621-87 -1

DATE LOGGED 11/09/04
DATE COMPLETED / /

DESCRIPTION FGD SLURRY FILTRATE
COMMENTS TEST 2
SAMPLE NUMBER 2-B
ANALYTICAL NUMBER 045542

		-------- WATER ANALYSIS ---------		
ANALYSIS	UNITS	VALUE	VALUE	DUP AVG
Calcium		654		
Total Iron		<0.53		
Magnesium		2120		
Potassium		161		
Sodium		346		
Ammonia as NH3	ppm	<10		
Chloride		3220		
Nitrate as N		26.1		
Sulfate		6870		
MERCURY	ng/ml	2.2		

Note: All units mg/L unless specified

CONSOL ENERGY INC.
RESEARCH & DEVELOPMENT
ANALYTICAL LABORATORY
SOUTH PARK, PENNSYLVANIA 15129

TO: JAW/SCT/JEL

PROJECT NUMBER 1621-87 -1

DATE LOGGED 11/09/04
DATE COMPLETED / /

DESCRIPTION FGD SLURRY FILTRATE
COMMENTS TEST 3
SAMPLE NUMBER 3-A
ANALYTICAL NUMBER 045543

		-------- WATER ANALYSIS ---------		
ANALYSIS	UNITS	VALUE	VALUE	DUP AVG
Calcium		636		
Total Iron		1.64		
Magnesium		2160		
Potassium		159		
Sodium		339		
Ammonia as NH3	ppm	<10		
Chloride		3320		
Nitrate as N		30.6		
Sulfate		6980		
MERCURY	ng/ml	<1.0		

Note: All units mg/L unless specified

CONSOL ENERGY INC.
RESEARCH & DEVELOPMENT
ANALYTICAL LABORATORY
SOUTH PARK, PENNSYLVANIA 15129

TO: JAW/SCT/JEL

PROJECT NUMBER 1621-87 -1

DATE LOGGED 11/09/04
DATE COMPLETED / /

DESCRIPTION FGD SLURRY FILTRATE
COMMENTS TEST 3
SAMPLE NUMBER 3-B
ANALYTICAL NUMBER 045544

		-------- WATER ANALYSIS ---------		
ANALYSIS	UNITS	VALUE	VALUE	DUP AVG
Calcium		599		
Total Iron		<0.53		
Magnesium		1930		
Potassium		148		
Sodium		316		
Ammonia as NH3	ppm	<10		
Chloride		3180		
Nitrate as N		21.4		
Sulfate		6260		
MERCURY	ng/ml	6.9		

Note: All units mg/L unless specified

CONSOL ENERGY INC.
RESEARCH & DEVELOPMENT
ANALYTICAL LABORATORY
SOUTH PARK, PENNSYLVANIA 15129

TO: JAW/SCT/JEL

PROJECT NUMBER 1621-87 -

DATE LOGGED 08/25/04
DATE COMPLETED / /

DESCRIPTION FGD MAKE-UP WATER
COMMENTS TEST 1
SAMPLE NUMBER 1
ANALYTICAL NUMBER 044255

		-------- WATER ANALYSIS ---------		
ANALYSIS	UNITS	VALUE	VALUE	DUP AVG
Calcium		683		
Total Iron		0.15		
Magnesium		1310		
Potassium		73.0		
Sodium		181		
Ammonia as NH3	ppm	<10		
Chloride		1850		
Nitrate as N		<10		
Sulfate		5140		
MERCURY	ng/ml	<1.0		

Note: All units mg/L unless specified

CONSOL ENERGY INC.
RESEARCH & DEVELOPMENT
ANALYTICAL LABORATORY
SOUTH PARK, PENNSYLVANIA 15129

TO: JAW/SCT/JEL

PROJECT NUMBER 1621-87 -

DATE LOGGED 08/25/04
DATE COMPLETED / /

DESCRIPTION FGD MAKE-UP WATER
COMMENTS TEST 2
SAMPLE NUMBER 2
ANALYTICAL NUMBER 044256

		-------- WATER ANALYSIS ---------		
ANALYSIS	UNITS	VALUE	VALUE	DUP AVG
Calcium		601		
Total Iron		0.24		
Magnesium		1150		
Potassium		66.8		
Sodium		166		
Ammonia as NH3	ppm	<10		
Chloride		1850		
Nitrate as N		<10		
Sulfate		4540		
MERCURY	ng/ml	<1.0		

Note: All units mg/L unless specified

CONSOL ENERGY INC.
RESEARCH & DEVELOPMENT
ANALYTICAL LABORATORY
SOUTH PARK, PENNSYLVANIA 15129

TO: JAW/SCT/JEL

PROJECT NUMBER 1621-87 -

DATE LOGGED 08/25/04
DATE COMPLETED / /

DESCRIPTION FGD MAKE-UP WATER
COMMENTS TEST 3
SAMPLE NUMBER 3
ANALYTICAL NUMBER 044257

		-------- WATER ANALYSIS ---------		
ANALYSIS	UNITS	VALUE	VALUE	DUP AVG
Calcium		584		
Total Iron		0.25		
Magnesium		1240		
Potassium		90.7		
Sodium		213		
Ammonia as NH3	ppm	<10		
Chloride		1950		
Nitrate as N		<10		
Sulfate		4790		
MERCURY	ng/ml	1.3		

Note: All units mg/L unless specified

CONSOL ENERGY INC.
RESEARCH & DEVELOPMENT
ANALYTICAL LABORATORY
SOUTH PARK, PENNSYLVANIA 15129

TO: JAW/SCT/JEL

PROJECT NUMBER 1621-87 -

DATE LOGGED 08/25/04
DATE COMPLETED / /

DESCRIPTION FGD MAKE-UP WATER
COMMENTS TEST 4
SAMPLE NUMBER 4
ANALYTICAL NUMBER 044258

		-------- WATER ANALYSIS ---------		
ANALYSIS	UNITS	VALUE	VALUE	DUP AVG
Calcium		582		
Total Iron		0.18		
Magnesium		1230		
Potassium		88.5		
Sodium		208		
Ammonia as NH3	ppm	<10		
Chloride		1900		
Nitrate as N		<10		
Sulfate		4760		
MERCURY	ng/ml	<1.0		

Note: All units mg/L unless specified

CONSOL ENERGY INC.
RESEARCH & DEVELOPMENT
ANALYTICAL LABORATORY
SOUTH PARK, PENNSYLVANIA 15129

TO: JAW/SCT/JEL

PROJECT NUMBER 1621-87 -1

DATE LOGGED 11/09/04
DATE COMPLETED / /

DESCRIPTION FGD MAKEUP WATER (ASH POND RETURN WATER)
COMMENTS TEST 1
SAMPLE NUMBER 1
ANALYTICAL NUMBER 045536

		-------- WATER ANALYSIS ---------		
ANALYSIS	UNITS	VALUE	VALUE	DUP AVG
Calcium		518		
Total Iron		<0.53		
Magnesium		1220		
Potassium		113		
Sodium		251		
Ammonia as NH3	ppm	<10		
Chloride		1720		
Nitrate as N		3.76		
Sulfate		4390		
MERCURY	ng/ml	<1.0		

Note: All units mg/L unless specified

CONSOL ENERGY INC.
RESEARCH & DEVELOPMENT
ANALYTICAL LABORATORY
SOUTH PARK, PENNSYLVANIA 15129

TO: JAW/SCT/JEL

PROJECT NUMBER 1621-87 -1

DATE LOGGED 11/09/04
DATE COMPLETED / /

DESCRIPTION FGD MAKEUP WATER (ASH POND RETURN WATER)
COMMENTS TEST 2
SAMPLE NUMBER 2
ANALYTICAL NUMBER 045537

		-------- WATER ANALYSIS ---------		
ANALYSIS	UNITS	VALUE	VALUE	DUP AVG
Calcium		491		
Total Iron		<0.53		
Magnesium		1150		
Potassium		109		
Sodium		242		
Ammonia as NH3	ppm	<10		
Chloride		1720		
Nitrate as N		0.03		
Sulfate		4150		
MERCURY	ng/ml	<1.0		

Note: All units mg/L unless specified

CONSOL ENERGY INC.
RESEARCH & DEVELOPMENT
ANALYTICAL LABORATORY
SOUTH PARK, PENNSYLVANIA 15129

TO: JAW/SCT/JEL

PROJECT NUMBER 1621-87 -1

DATE LOGGED 11/09/04
DATE COMPLETED / /

DESCRIPTION FGD MAKEUP WATER (ASH POND RETURN WATER)
COMMENTS TEST 3
SAMPLE NUMBER 3
ANALYTICAL NUMBER 045538

		-------- WATER ANALYSIS ---------		
ANALYSIS	UNITS	VALUE	VALUE	DUP AVG
Calcium		573		
Total Iron		<0.53		
Magnesium		1160		
Potassium		102		
Sodium		221		
Ammonia as NH3	ppm	<10		
Chloride		1720		
Nitrate as N		3.99		
Sulfate		4460		

MERCURY ng/ml 1.1

Note: All units mg/L unless specified

CONSOL ENERGY INC.
RESEARCH & DEVELOPMENT
ANALYTICAL LABORATORY
SOUTH PARK, PENNSYLVANIA 15129

TO: JAW/SCT/JEL

PROJECT NUMBER 1621-87 -

DATE LOGGED 08/25/04
DATE COMPLETED / /

DESCRIPTION SERVICE/ME WASH WATER
COMMENTS TEST 1
SAMPLE NUMBER 1
ANALYTICAL NUMBER 044259

		-------- WATER ANALYSIS ---------		
ANALYSIS	UNITS	VALUE	VALUE	DUP AVG
Calcium		40.5		
Total Iron		<0.05		
Magnesium		12.1		
Potassium		3.83		
Sodium		29.9		
Ammonia as NH3	ppm	<10		
Chloride		200		
Nitrate as N		<10		
Sulfate		68.0		
MERCURY	ng/ml	<1.0		

Note: All units mg/L unless specified

CONSOL ENERGY INC.
RESEARCH & DEVELOPMENT
ANALYTICAL LABORATORY
SOUTH PARK, PENNSYLVANIA 15129

TO: JAW/SCT/JEL

PROJECT NUMBER 1621-87 -

DATE LOGGED 08/25/04
DATE COMPLETED / /

DESCRIPTION SERVICE/ME WASH WATER
COMMENTS TEST 2
SAMPLE NUMBER 2
ANALYTICAL NUMBER 044260

		-------- WATER ANALYSIS ---------		
ANALYSIS	UNITS	VALUE	VALUE	DUP AVG
Calcium		40.0		
Total Iron		0.21		
Magnesium		11.8		
Potassium		3.82		
Sodium		30.7		
Ammonia as NH3	PPM	<10		
Chloride		200		
Nitrate as N		<10		
Sulfate		65.9		
MERCURY	ng/ml	<1.0		

Note: All units mg/L unless specified

CONSOL ENERGY INC.
RESEARCH & DEVELOPMENT
ANALYTICAL LABORATORY
SOUTH PARK, PENNSYLVANIA 15129

TO: JAW/SCT/JEL

PROJECT NUMBER 1621-87 -

DATE LOGGED 08/25/04
DATE COMPLETED / /

DESCRIPTION SERVICE/ME WASH WATER
COMMENTS TEST 3
SAMPLE NUMBER 3
ANALYTICAL NUMBER 044261

		-------- WATER ANALYSIS ---------		
ANALYSIS	UNITS	VALUE	VALUE	DUP AVG
Calcium		40.1		
Total Iron		<0.05		
Magnesium		11.5		
Potassium		3.67		
Sodium		29.1		
Ammonia as NH3	ppm	<10		
Chloride		150		
Nitrate as N		<10		
Sulfate		64.6		
MERCURY	ng/ml	<1.0		

Note: All units mg/L unless specified

CONSOL ENERGY INC.
RESEARCH & DEVELOPMENT
ANALYTICAL LABORATORY
SOUTH PARK, PENNSYLVANIA 15129

TO: JAW/SCT/JEL

PROJECT NUMBER 1621-87 -

DATE LOGGED 08/25/04
DATE COMPLETED / /

DESCRIPTION SERVICE/ME WASH WATER
COMMENTS TEST 4
SAMPLE NUMBER 4
ANALYTICAL NUMBER 044262

		-------- WATER ANALYSIS ---------		
ANALYSIS	UNITS	VALUE	VALUE	DUP AVG
Calcium		40.0		
Total Iron		<0.05		
Magnesium		11.5		
Potassium		3.66		
Sodium		29.3		
Ammonia as NH3	ppm	<10		
Chloride		150		
Nitrate as N		<10		
Sulfate		64.3		
MERCURY	ng/ml	<1.0		

Note: All units mg/L unless specified

CONSOL ENERGY INC.
RESEARCH & DEVELOPMENT
ANALYTICAL LABORATORY
SOUTH PARK, PENNSYLVANIA 15129

TO: JAW/SCT/JEL

PROJECT NUMBER 1621-87 -1

DATE LOGGED 11/09/04
DATE COMPLETED / /

DESCRIPTION SERVICE/ME WASH WATER
COMMENTS TEST 1
SAMPLE NUMBER 1
ANALYTICAL NUMBER 045533

		-------- WATER ANALYSIS ---------		
ANALYSIS	UNITS	VALUE	VALUE	DUP AVG
Calcium		43.9		
Total Iron		<0.53		
Magnesium		12.4		
Potassium		<5.35		
Sodium		13.7		
Ammonia as NH3	ppm	<10		
Chloride		15.0		
Nitrate as N		0.02		
Sulfate		56.1		
MERCURY	ng/ml	<1.0		

Note: All units mg/L unless specified

CONSOL ENERGY INC.
RESEARCH & DEVELOPMENT
ANALYTICAL LABORATORY
SOUTH PARK, PENNSYLVANIA 15129

TO: JAW/SCT/JEL

PROJECT NUMBER 1621-87 -1

DATE LOGGED 11/09/04
DATE COMPLETED / /

DESCRIPTION SERVICE/ME WASH WATER
COMMENTS TEST 2
SAMPLE NUMBER 2
ANALYTICAL NUMBER 045534

		-------- WATER ANALYSIS ---------		
ANALYSIS	UNITS	VALUE	VALUE	DUP AVG
Calcium		43.0		
Total Iron		0.93		
Magnesium		11.7		
Potassium		<5.35		
Sodium		14.1		
Ammonia as NH3	ppm	<10		
Chloride		14.0		
Nitrate as N		0.02		
Sulfate		53.5		

MERCURY	ng/ml	<1.0

Note: All units mg/L unless specified

CONSOL ENERGY INC.
RESEARCH & DEVELOPMENT
ANALYTICAL LABORATORY
SOUTH PARK, PENNSYLVANIA 15129

TO: JAW/SCT/JEL

PROJECT NUMBER 1621-87 -1

DATE LOGGED 11/09/04
DATE COMPLETED / /

DESCRIPTION SERVICE/ME WASH WATER
COMMENTS TEST 3
SAMPLE NUMBER 3
ANALYTICAL NUMBER 045535

		-------- WATER ANALYSIS ---------		
ANALYSIS	UNITS	VALUE	VALUE	DUP AVG
Calcium		41.1		
Total Iron		<0.53		
Magnesium		12.5		
Potassium		<5.35		
Sodium		14.2		
Ammonia as NH3	ppm	<10		
Chloride		10.0		
Nitrate as N		0.67	0.68	0.68
Sulfate		55.4		

MERCURY	ng/ml	<1.0

Note: All units mg/L unless specified

CONSOL ENERGY INC.
RESEARCH & DEVELOPMENT
ANALYTICAL LABORATORY
4000 BROWNSVILLE ROAD, SOUTH PARK, PA 15129

DESCRIPTION *MILL REJECTS TEST#4*
DATE SAMPLED *08/19/04*
SAMPLE NUMBER *MILL REJECTS*

DATE LOGGED *08/25/04*
DATE COMPLETED *09/02/04*
PROJECT NUMBER *1621-87 -*
ANALYTICAL NUMBER **044144**

ANALYSIS REPORT

PROXIMATE	(Dry)%
Ash	49.02
Volatile Matter	31.42
Fixed Carbon	19.56
Sulfur, Total	22.68
BTU/lb	6236
MAF BTU/lb	12232

ULTIMATE	(Dry)%
Carbon	30.93
Hydrogen	1.60
Nitrogen	0.92
Chlorine	0.018
Sulfur, Total	22.68
Ash	49.02
Oxygen (DIFF)	-5.17

MAJOR ASH ELEM	%
Ignited at 75 C	
SiO2	12.38
Al2O3	4.28
TiO2	0.17
Fe2O3	62.55
CaO	12.26
MgO	0.86
Na2O	0.09
K2O	0.63
P2O5	0.33
SO3	4.85
UND	1.60

TOTAL MOISTURE % 7.01

MISC. (As Det.)

Hg 0.878 PPM

AS DETERMINED MOISTURE: 2.10 %

DISTRIBUTION:
TSENG
LOCKE

Approved for transmittal _____

CONSOL ENERGY INC.
RESEARCH & DEVELOPMENT
ANALYTICAL LABORATORY
4000 BROWNSVILLE ROAD, SOUTH PARK, PA 15129

DESCRIPTION *GYPSUM TEST 4*
DATE SAMPLED *08/19/04*
SAMPLE NUMBER *GYPSUM*

DATE LOGGED *08/25/04*
DATE COMPLETED *09/15/04*
PROJECT NUMBER *1621-87 -*
ANALYTICAL NUMBER **044160**

ANALYSIS REPORT

PROXIMATE	(Dry)%
Ash	97.48
Total Sulfur	21.15

MISC. (As Det.)	
Hg	0.049 PPM
%SOLIDS	
DENSITY	

ULTIMATE	(Dry)%
Carbon	0.37
Chlorine	0.014
Ash	97.48

MAJOR ASH ELEM	(Dry)%
SiO2	1.68
Al2O3	0.30
TiO2	0.01
Fe2O3	0.27
CaO	41.39
MgO	0.36
Na2O	0.01
K2O	0.06
P2O5	<0.00
SO3	52.87
UND	3.05

AS DETERMINED MOISTURE: 19.20 %

DISTRIBUTION:
TSENG
LOCKE

Approved for transmittal _____

CONSOL ENERGY INC.
RESEARCH & DEVELOPMENT
ANALYTICAL LABORATORY
4000 BROWNSVILLE ROAD, SOUTH PARK, PA 15129

DESCRIPTION *GYPSUM TEST 1*
DATE SAMPLED *11/05/04*
SAMPLE NUMBER *1*

DATE LOGGED *11/09/04*
DATE COMPLETED *11/18/04*
PROJECT NUMBER *1621-87 -1*
ANALYTICAL NUMBER **045596**

ANALYSIS REPORT

PROXIMATE	(Dry)%
Ash	97.14
Total Sulfur	19.70

MISC. (As Det.)	
Hg	0.118 PPM

ULTIMATE	(Dry)%
Carbon	0.22
Chlorine	0.011
Ash	97.14

MAJOR ASH ELEM	(Dry)%
SiO2	1.69
Al2O3	0.27
TiO2	0.01
Fe2O3	0.25
CaO	39.97
MgO	0.42
Na2O	0.01
K2O	0.07
P2O5	<0.00
SO3	49.25
UND	8.06

AS DETERMINED MOISTURE: 19.16 %

DISTRIBUTION:
S. TSENG
J. WITHUM
J. LOCKE

Approved for transmittal _____

CONSOL ENERGY INC.
RESEARCH & DEVELOPMENT
ANALYTICAL LABORATORY
4000 BROWNSVILLE ROAD, SOUTH PARK, PA 15129

DESCRIPTION *GYPSUM TEST 2*
DATE SAMPLED *11/05/04*
SAMPLE NUMBER 2

DATE LOGGED *11/09/04*
DATE COMPLETED *11/18/04*
PROJECT NUMBER *1621-87 -1*
ANALYTICAL NUMBER **045597**

ANALYSIS REPORT

PROXIMATE	(Dry)%
Ash	97.18
Total Sulfur	19.69

MISC. (As Det.)	
Hg	0.103 PPM

ULTIMATE	(Dry)%
Carbon	0.21
Chlorine	0.011
Ash	97.18

MAJOR ASH ELEM	(Dry)%
SiO2	1.67
Al2O3	0.27
TiO2	0.01
Fe2O3	0.23
CaO	40.04
MgO	0.42
Na2O	<0.00
K2O	0.07
P2O5	<0.00
SO3	49.22
UND	8.07

AS DETERMINED MOISTURE: 19.14 %

DISTRIBUTION:
S. TSENG
J. WITHUM
J. LOCKE

Approved for transmittal _____

CONSOL ENERGY INC.
RESEARCH & DEVELOPMENT
ANALYTICAL LABORATORY
4000 BROWNSVILLE ROAD, SOUTH PARK, PA 15129

DESCRIPTION *GYPSUM TEST 3*
DATE SAMPLED *11/05/04*
SAMPLE NUMBER 3

DATE LOGGED *11/09/04*
DATE COMPLETED *11/18/04*
PROJECT NUMBER *1621-87 -1*
ANALYTICAL NUMBER **045598**

ANALYSIS REPORT

PROXIMATE	(Dry)%
Ash	97.34
Total Sulfur	19.90

MISC. (As Det.)	
Hg	0.100 PPM

ULTIMATE	(Dry)%
Carbon	0.20
Chlorine	0.006
Ash	97.34

MAJOR ASH ELEM	(Dry)%
SiO2	1.67
Al2O3	0.26
TiO2	0.01
Fe2O3	0.24
CaO	40.25
MgO	0.41
Na2O	
K2O	0.06
P2O5	<0.00
SO3	49.75
UND	7.35

AS DETERMINED MOISTURE: 19.26 %

DISTRIBUTION:
S. TSENG
J. WITHUM
J. LOCKE

Approved for transmittal _____

CONSOL ENERGY INC.
RESEARCH & DEVELOPMENT
ANALYTICAL LABORATORY
4000 BROWNSVILLE ROAD, SOUTH PARK, PA 15129

DESCRIPTION *HYDROCLONE OVERFLOW SOLIDS TEST 1*
DATE SAMPLED *11/05/04*
SAMPLE NUMBER 1

DATE LOGGED *11/09/04*
DATE COMPLETED *12/03/04*
PROJECT NUMBER *1621-87 -1*
ANALYTICAL NUMBER **045590**

ANALYSIS REPORT

PROXIMATE	(Dry)%
Ash	84.05
Total Sulfur	6.81

MISC. (As Det.)	
Hg	3.51
% SOLIDS	1.1
DENSITY	1.023

ULTIMATE	(Dry)%
Carbon	3.92
Chlorine	0.094
Ash	84.05

MAJOR ASH ELEM	(Dry)%
SiO2	23.42
Al2O3	7.20
TiO2	0.26
Fe2O3	4.09
CaO	27.37
MgO	4.24
Na2O	0.15
K2O	1.53
P2O5	0.10
SO3	17.02
UND	14.62

AS DETERMINED MOISTURE: 3.15 %

DISTRIBUTION:
S. TSENG
J. WITHUM
J. LOCKE

Approved for transmittal _____

CONSOL ENERGY INC.
RESEARCH & DEVELOPMENT
ANALYTICAL LABORATORY
4000 BROWNSVILLE ROAD, SOUTH PARK, PA 15129

DESCRIPTION *HYDROCLONE OVERFLOW SOLIDS TEST 2*
DATE SAMPLED *11/05/04*
SAMPLE NUMBER 2

DATE LOGGED *11/09/04*
DATE COMPLETED *12/03/04*
PROJECT NUMBER *1621-87 -1*
ANALYTICAL NUMBER **045591**

ANALYSIS REPORT

PROXIMATE	(Dry)%
Ash	84.90
Total Sulfur	6.93

MISC. (As Det.)	
Hg	3.74
% SOLIDS	1.0
DENSITY	1.022

ULTIMATE	(Dry)%
Carbon	3.64
Chlorine	0.103
Ash	84.90

MAJOR ASH ELEM	(Dry)%
SiO2	24.46
Al2O3	7.44
TiO2	0.27
Fe2O3	4.30
CaO	26.11
MgO	4.36
Na2O	0.17
K2O	1.56
P2O5	0.10
SO3	17.32
UND	13.91

AS DETERMINED MOISTURE: 3.51 %

DISTRIBUTION:
S. TSENG
J. WITHUM
J. LOCKE

Approved for transmittal _____

CONSOL ENERGY INC.
RESEARCH & DEVELOPMENT
ANALYTICAL LABORATORY
4000 BROWNSVILLE ROAD, SOUTH PARK, PA 15129

DESCRIPTION *HYDROCLONE OVERFLOW SOLIDS TEST 3*
DATE SAMPLED *11/05/04*
SAMPLE NUMBER 3

DATE LOGGED *11/09/04*
DATE COMPLETED *12/03/04*
PROJECT NUMBER *1621-87 -1*
ANALYTICAL NUMBER 045592

ANALYSIS REPORT

PROXIMATE	(Dry)%
Ash	96.21
Total Sulfur	20.84

MISC. (As Det.)	
Hg	0.119
% SOLIDS	9.7
DENSITY	1.022

ULTIMATE	(Dry)%
Carbon	0.63
Chlorine	0.017
Ash	96.21

MAJOR ASH ELEM	(Dry)%
SiO2	3.37
Al2O3	0.76
TiO2	0.02
Fe2O3	0.54
CaO	42.63
MgO	0.74
Na2O	0.04
K2O	0.18
P2O5	<0.00
SO3	52.11
UND	-0.39

AS DETERMINED MOISTURE: 17.42 %

DISTRIBUTION:
S. TSENG
J. WITHUM
J. LOCKE

Approved for transmittal _____

CONSOL ENERGY INC.
RESEARCH & DEVELOPMENT
ANALYTICAL LABORATORY
SOUTH PARK, PENNSYLVANIA 15129

TO: JAW/SCT/JEL

PROJECT NUMBER 1621-87 -1

DATE LOGGED 11/09/04
DATE COMPLETED / /

DESCRIPTION HYDROCLONE OVERFLOW FILTRATE
COMMENTS TEST 1
SAMPLE NUMBER 1
ANALYTICAL NUMBER 045545

		-------- WATER ANALYSIS ---------		
ANALYSIS	UNITS	VALUE	VALUE	DUP AVG
Calcium		584		
Total Iron		0.77		
Magnesium		1780		
Potassium		134		
Sodium		286		
Ammonia as NH3	ppm	<10		
Chloride		2960		
Nitrate as N		21.6	23.3	22.5
Sulfate		5920		

MERCURY	ng/ml	<1.0

Note: All units mg/L unless specified

CONSOL ENERGY INC.
RESEARCH & DEVELOPMENT
ANALYTICAL LABORATORY
SOUTH PARK, PENNSYLVANIA 15129

TO: JAW/SCT/JEL

PROJECT NUMBER 1621-87 -1

DATE LOGGED 11/09/04
DATE COMPLETED / /

DESCRIPTION HYDROCLONE OVERFLOW FILTRATE
COMMENTS TEST 2
SAMPLE NUMBER 2
ANALYTICAL NUMBER 045546

		-------- WATER ANALYSIS ---------		
ANALYSIS	UNITS	VALUE	VALUE	DUP AVG
Calcium		551		
Total Iron		<0.53		
Magnesium		1770		
Potassium		138		
Sodium		291		
Ammonia as NH3	ppm	<10		
Chloride		2980		
Nitrate as N		20.3		
Sulfate		5770		
MERCURY	ng/ml	<1.0		

Note: All units mg/L unless specified

CONSOL ENERGY INC.
RESEARCH & DEVELOPMENT
ANALYTICAL LABORATORY
SOUTH PARK, PENNSYLVANIA 15129

TO: JAW/SCT/JEL

PROJECT NUMBER 1621-87 -1

DATE LOGGED 11/09/04
DATE COMPLETED / /

DESCRIPTION HYDROCLONE OVERFLOW FILTRATE
COMMENTS TEST 3
SAMPLE NUMBER 3
ANALYTICAL NUMBER 045547

		-------- WATER ANALYSIS ---------		
ANALYSIS	UNITS	VALUE	VALUE	DUP AVG
Calcium		539		
Total Iron		<0.53		
Magnesium		1710		
Potassium		135		
Sodium		287		
Ammonia as NH3	ppm	<10		
Chloride		2860		
Nitrate as N		18.6		
Sulfate		5560		
MERCURY	ng/ml	<1.0		

Note: All units mg/L unless specified

CONSOL ENERGY INC.
RESEARCH & DEVELOPMENT
ANALYTICAL LABORATORY
4000 BROWNSVILLE ROAD, SOUTH PARK, PA 15129

DESCRIPTION *HYDROCLONE UNDERFLOW SOLIDS TEST 1*
DATE SAMPLED *11/05/04*
SAMPLE NUMBER 1

DATE LOGGED *11/09/04*
DATE COMPLETED *12/03/04*
PROJECT NUMBER *1621-87 -1*
ANALYTICAL NUMBER **045593**

ANALYSIS REPORT

PROXIMATE	(Dry)%
Ash	97.29
Total Sulfur	21.90

MISC. (As Det.)	
Hg	0.158
% SOLIDS	45.5
DENSITY	1.143

ULTIMATE	(Dry)%
Carbon	0.47
Chlorine	0.008
Ash	97.29

MAJOR ASH ELEM	(Dry)%
SiO2	1.68
Al2O3	0.26
TiO2	0.01
Fe2O3	0.25
CaO	43.70
MgO	0.44
Na2O	0.01
K2O	0.07
P2O5	<0.00
SO3	54.75
UND	-1.17

AS DETERMINED MOISTURE: 0.52 %

DISTRIBUTION:
S. TSENG
J. WITHUM
J. LOCKE

Approved for transmittal _____

CONSOL ENERGY INC.
RESEARCH & DEVELOPMENT
ANALYTICAL LABORATORY
4000 BROWNSVILLE ROAD, SOUTH PARK, PA 15129

DESCRIPTION *HYDROCLONE UNDERFLOW SOLIDS TEST 2*
DATE SAMPLED *11/05/04*
SAMPLE NUMBER 2

DATE LOGGED *11/09/04*
DATE COMPLETED *12/03/04*
PROJECT NUMBER *1621-87 -1*
ANALYTICAL NUMBER **045594**

ANALYSIS REPORT

PROXIMATE	(Dry)%
Ash	97.17
Total Sulfur	22.05

MISC. (As Det.)	
Hg	0.119
% SOLIDS	44.7
DENSITY	1.109

ULTIMATE	(Dry)%
Carbon	0.43
Chlorine	0.010
Ash	97.17

MAJOR ASH ELEM	(Dry)%
SiO2	1.69
Al2O3	0.26
TiO2	0.01
Fe2O3	0.26
CaO	44.17
MgO	0.46
Na2O	0.01
K2O	0.07
P2O5	<0.00
SO3	55.12
UND	-2.05

AS DETERMINED MOISTURE: 3.16 %

DISTRIBUTION:
S. TSENG
J. WITHUM
J. LOCKE

Approved for transmittal _____

CONSOL ENERGY INC.
RESEARCH & DEVELOPMENT
ANALYTICAL LABORATORY
4000 BROWNSVILLE ROAD, SOUTH PARK, PA 15129

DESCRIPTION *HYDROCLONE UNDERFLOW SOLIDS TEST 3*
DATE SAMPLED *11/05/04*
SAMPLE NUMBER 3

DATE LOGGED *11/09/04*
DATE COMPLETED *12/03/04*
PROJECT NUMBER *1621-87 -1*
ANALYTICAL NUMBER **045595**

ANALYSIS REPORT

PROXIMATE	(Dry)%
Ash	97.54
Total Sulfur	22.00

MISC. (As Det.)	
Hg	0.114
% SOLIDS	49.0
DENSITY	1.133

ULTIMATE	(Dry)%
Carbon	0.43
Chlorine	0.008
Ash	97.54

MAJOR ASH ELEM	(Dry)%
SiO_2	1.54
Al_2O_3	0.24
TiO_2	0.01
Fe_2O_3	0.24
CaO	44.26
MgO	0.42
Na_2O	0.01
K_2O	0.07
P_2O_5	<0.00
SO_3	55.01
UND	-1.80

AS DETERMINED MOISTURE: 1.73 %

DISTRIBUTION:
S. TSENG
J. WITHUM
J. LOCKE

Approved for transmittal _____

CONSOL ENERGY INC.
RESEARCH & DEVELOPMENT
ANALYTICAL LABORATORY
SOUTH PARK, PENNSYLVANIA 15129

TO: JAW/SCT/JEL

PROJECT NUMBER 1621-87 -1

DATE LOGGED 11/09/04
DATE COMPLETED / /

DESCRIPTION HYDROCLONE UNDERFLOW FILTRATE
COMMENTS TEST 1
SAMPLE NUMBER 1
ANALYTICAL NUMBER 045548

		-------- WATER ANALYSIS ---------		
ANALYSIS	UNITS	VALUE	VALUE	DUP AVG
Calcium		530		
Total Iron		0.68		
Magnesium		1700		
Potassium		130		
Sodium		270		
Ammonia as NH3	ppm	<10		
Chloride		2880		
Nitrate as N		15.4		
Sulfate		5550		

MERCURY	ng/ml	<1.0

Note: All units mg/L unless specified

CONSOL ENERGY INC.
RESEARCH & DEVELOPMENT
ANALYTICAL LABORATORY
SOUTH PARK, PENNSYLVANIA 15129

TO: JAW/SCT/JEL

PROJECT NUMBER 1621-87 -1

DATE LOGGED 11/09/04
DATE COMPLETED 02/02/05

DESCRIPTION HYDROCLONE UNDERFLOW FILTRATE
COMMENTS TEST 2
SAMPLE NUMBER 2
ANALYTICAL NUMBER 045549

		-------- WATER ANALYSIS ---------		
ANALYSIS	UNITS	VALUE	VALUE	DUP AVG
Calcium				
Total Iron				
Magnesium				
Potassium				
Sodium				
Ammonia as NH3	ppm	<10		
Chloride		2860		
Nitrate as N		16.3		
Sulfate				
MERCURY	ng/ml	<1.0		

Note: All units mg/L unless specified

CONSOL ENERGY INC.
RESEARCH & DEVELOPMENT
ANALYTICAL LABORATORY
SOUTH PARK, PENNSYLVANIA 15129

TO: JAW/SCT/JEL

PROJECT NUMBER 1621-87 -1

DATE LOGGED 11/09/04
DATE COMPLETED / /

DESCRIPTION HYDROCLONE UNDERFLOW FILTRATE
COMMENTS TEST 3
SAMPLE NUMBER 3
ANALYTICAL NUMBER 045550

		-------- WATER ANALYSIS ---------		
ANALYSIS	UNITS	VALUE	VALUE	DUP AVG
Calcium		597		
Total Iron		0.58		
Magnesium		1740		
Potassium		132		
Sodium		274		
Ammonia as NH3	ppm	<10		
Chloride		2640		
Nitrate as N		15.0	15.0	15.0
Sulfate		5760		

MERCURY	ng/ml	<1.0

Note: All units mg/L unless specified