EVALUATION OF MERCURY EMISSIONS FROM COAL-FIRED FACILITIES WITH SCR AND FGD SYSTEMS

Topical Report No. 11 (Plant 3)

U.S. DOE NETL Cooperative Agreement DE-FC26-02NT41589

Issued: January 2006

J. A. Withum
J. E. Locke

CONSOL Energy Inc.,
Research & Development
4000 Brownsville Rd.
South Park, PA 15129
(412) 854-6600

DISCLAIMER

This report was prepared as an account of work sponsored by an agency of the United States Government. Neither the United States Government nor any agency thereof, nor any of their employees, makes any warranty, express or implied, or assumes any legal liability or responsibility for the accuracy, completeness, or usefulness of any information, apparatus, product, or process disclosed, or represents that its use would not infringe privately owned rights. Reference herein to any specific commercial product, process, or service by trade name, trademark, manufacturer, or otherwise does not necessarily constitute or imply its endorsement, recommendation, or favoring by the United States Government or any agency thereof. The views and opinions of authors expressed herein do not necessarily state or reflect those of the United States Government or any agency thereof.

ABSTRACT

CONSOL Energy Inc., Research & Development (CONSOL), with support from the U.S. Department of Energy, National Energy Technology Laboratory (DOE) and the Electric Power Research Institute (EPRI), is evaluating the effects of selective catalytic reduction (SCR) on mercury (Hg) capture in coal-fired plants equipped with an electrostatic precipitator (ESP) - wet flue gas desulfurization (FGD) combination or a spray dyer absorber – fabric filter (SDA-FF) combination. In this program CONSOL is determining mercury speciation and removal at 10 coal-fired facilities. The principal purpose of this work is to develop a better understanding of the potential mercury removal "co-benefits" achieved by NOx, and SO_2 control technologies. It is expected that these data will provide the basis for fundamental scientific insights into the nature of mercury chemistry in flue gas, the catalytic effect of SCR systems on mercury speciation and the efficacy of different FGD technologies for mercury capture. Ultimately, this insight could help to design and operate SCR and FGD systems to maximize mercury removal. The objectives are 1) to evaluate the effect of SCR on mercury capture in the ESP-FGD and SDA-FF combinations at coal-fired power plants, 2) evaluate the effect of SCR catalyst degradation on mercury capture; 3) evaluate the effect of low load operation on mercury capture in an SCR-FGD system, and 4) collect data that could provide the basis for fundamental scientific insights into the nature of mercury chemistry in flue gas, the catalytic effect of SCR systems on mercury speciation and the efficacy of different FGD technologies for mercury capture.

This document, the eleventh in a series of topical reports, describes the results and analysis of mercury sampling performed on Unit 2 at Plant 3, a 508 MW unit burning a bituminous coal containing 3.6% sulfur. The unit is equipped with a SCR, ESP, and wet FGD to control NO_x, particulate, and SO_2 emissions, respectively. Six sampling tests were performed in June 2005 with the SCR operating; flue gas mercury speciation and concentrations were determined at the SCR inlet, SCR outlet, air heater outlet (ESP inlet), ESP outlet (FGD inlet), and at the stack (FGD outlet) using the Ontario Hydro method. During four of the tests, calcium chloride ($CaCl_2$) was added to the coal to determine if the increased chlorine content would have an effect on mercury speciation and, ultimately, mercury removal. Although this plant typically burns a low-chlorine coal (ca. 100 ppm Cl), the average chlorine content of the coal during the baseline tests was 350 ppm. The average coal chlorine content was 440 and 735 ppm during the two days of chlorine addition.

In the baseline tests the average coal-to-stack mercury removal was 64%. This is substantially lower than the 80-90% (range) removals observed on other units with SCR-FGD combinations in this project. In the chloride addition tests the average coal-to-stack mercury removal was 70%, which is higher than the baseline test removal, but still less than the 80-90% observed at other similarly configured plants.

The addition of calcium chloride to the coal at this plant was expected to increase the percentage of oxidized mercury at the air heater outlet compared to the baseline tests. However, the unexpected result of the baseline tests was the finding of a high

percentage of oxidized mercury (91%) at the air heater outlet, perhaps due to the higher than expected coal chlorine content. As a result, there was not much room for additional mercury oxidation when chlorine was added to the coal. A slightly higher percentage of oxidized mercury at the air heater outlet was observed in the chloride addition tests (95-97%), but the difference was not substantial.

Process samples for material balances were collected during the flue gas measurements. The mercury material balance closures ranged from 92% to 115%, with an average material balance closure of 101% for the six tests.

TABLE OF CONTENTS

Page
ABSTRACT ii
LIST OF ABBREVIATIONS vii
INTRODUCTION 1
HOST UTILITY DESCRIPTION 2
MERCURY SAMPLING RESULTS 2
I. Test Matrix 2
II. Flue Gas Mercury Sampling Results 3
A. SCR inlet 4
B. SCR outlet 4
C. Air heater outlet 5
D. FGD inlet 6
E. Stack 7
III. SCR/FGD System Hg Removal 8
IV. Mercury Material Balance 9
EXPERIMENTAL AND SAMPLING METHODS 12
I. Flue Gas Sampling Locations and Sampling Points 12
A. SCR inlet 12
B. SCR outlet 13
C. Air heater outlet 13
D. FGD inlet 13
E. Stack 13
II. Flue Gas Mercury Measurements 14
III. Coal Sampling and Analysis 15
A. Coal samples 15
IV. Process Sample Collection and Analysis 17
A. Bottom ash 17
B. Limestone slurry 19
C. ESP hopper ash 21
D. FGD slurry 26
E. FGD makeup water 28
F. ME wash water samples 29
I. Blank Samples 31
II. NIST Standard Reference Material Checks 32
III. Spike Sample Recoveries 32
IV. Duplicate Analyses 32
V. Flue Gas Mercury Concentration Detection Limits 33
VI. Mercury Material Balance Closure 33
A. Mercury input from coal 34
B. Mercury input from limestone slurry 34
C. Mercury input from FGD makeup water 35
D. Mercury output via bottom ash 36
E. Mercury output via ESP hopper ash 37
F. Mercury output via FGD Slurry 37
G. Mercury output via stack flue gas 38

H. Material Balance Closure for Mercury 39
VII. Heat input-based mercury emission 41

LIST OF TABLES

Table 1. Coal-fired facilities in program 2
Table 2. Sampling test matrix 3
Table 3. Flue gas mercury speciation at the SCR inlet 4
Table 4. Flue gas mercury speciation at the SCR outlet 5
Table 5. Flue gas mercury speciation at the air heater outlet 6
Table 6. Flue gas mercury speciation at the FGD inlet 7
Table 7. Flue gas mercury speciation at the stack 8
Table 8. Flue gas mercury removal 9
Table 9. Mercury material balance 10
Table 10. Comparison of Average Mercury Speciation at the Air Heater Outlet 11
Table 11. Comparison of Average Mercury Reductions Across the FGD Scrubber 12
Table 12. Mercury speciation by train component 14
Table 13. Coal sample analyses 16
Table 14. Results of analyses of bottom ash filtered solids 18
Table 15. Results of analyses of bottom ash filtrate 19
Table 16. Results of analyses of limestone slurry solids samples 20
Table 17. Results of analyses of limestone slurry filtrate samples 21
Table 18. Results of analyses of ESP hopper ash samples collected in Tests 1 and 2 22
Table 19. Results of analyses of ESP hopper ash samples collected in Tests 3 and 4 23
Table 20. Results of analyses of ESP hopper ash samples collected in Test 5 24
Table 21. Results of analyses of ESP hopper ash samples collected in Test 6 25
Table 22. Results of analyses of FGD slurry solids samples 26
Table 23. Results of analyses of FGD slurry filtrate samples 27
Table 24. Results of analyses of FGD makeup water solids samples 28
Table 25 Results of analyses of FGD makeup water filtrate samples 29
Table 26. Results of analyses of ME wash water samples 30
Table 27. NIST SRM analyses 32
Table 28. Flue gas mercury detection limits 33
Table 29. Mercury Input from Coal 34
Table 30. Mercury Input from Limestone Slurry 35
Table 31. Mercury Input from FGD Makeup Water 36
Table 32. Mercury Output via Bottom Ash 37
Table 33. Mercury Output via ESP Hopper Ash 37
Table 34. Mercury Output via FGD Slurry 38
Table 35. Mercury Output via Stack Flue Gas 39
Table 36. Summary of material balance closure for mercury. 40
Table 37. Heat input-based mercury emission 41

LIST OF FIGURES

Figure Page
Figure 1. Mercury speciation by location. 42
Figure 2. Process flow schematic and sampling locations 43
Figure 3. SCR inlet probe and sampling train..... 44
Figure 4. SCR outlet probe and sampling train 45
Figure 5. ESP inlet (air heater outlet) probe and sampling train..... 46
Figure 6. FGD inlet probe..... 47
Figure 7. Stack sampling location, showing probe ready for insertion..... 48
Figure 8. Ontario-Hydro sampling train schematic 49
Figure 9. ESP ash hoppers, showing pipes used for transferring ash to the silo..... 50

LIST OF APPENDICES

APPENDIX A Mercury Sampling Data A-1
APPENDIX B Plant Process Data B-1
APPENDIX C Flue Gas Hg Data C-1
APPENDIX D Process Material Data D-1

LIST OF ABBREVIATIONS

acfm	-	actual cubic feet per minute (wet)
am	-	morning
Btu	-	heating value in British Thermal Units
Ca/S	-	calcium-sulfur ratio
cfm	-	cubic feet per minute
CO_2	-	carbon dioxide
CONSOL R&D	-	CONSOL Energy Inc., Research and Development
CVAA	-	cold vapor atomic absorption
DI	-	deionized water
DOE	-	U.S. Department of Energy
dscf	-	dry standard cubic feet
dscfm	-	dry standard cubic feet per minute
EPA	-	U.S. Environmental Protection Agency
EPRI	-	Electric Power Research Institute
ESP	-	electrostatic precipitator
FGD	-	flue gas desulphurization
ft	-	feet
ft^2	-	square feet
ft^3	-	cubic feet
gm	-	grams
gpm	-	gallons per minute
gr	-	grains
HCl	-	hydrochloric acid
Hg	-	mercury
Hg^{part}	-	mercury in particulate form
Hg^{total}	-	total mercury in particulate, oxidized, and elemental forms
Hg^{++}	-	mercury in oxidized form
Hg^{o}	-	mercury in elemental form
HNO_3	-	nitric acid
HCOF	-	hydroclone overflow
HCUF	-	hydroclone underflow
H_2O	-	water
H_2O_2	-	hydrogen peroxide
hr	-	hour
ICP-AES	-	inductively coupled plasma-atomic emission spectrometer
in	-	inch
KCl	-	potassium chloride
$KMnO_4$	-	potassium permanganate
L	-	liter
lb	-	pound
m	-	meter
m^3	-	cubic meter
ME	-	mist eliminator
mg	-	milligram, 10^{-3} gram

LIST OF ABBREVIATIONS (continued)

min	-	minute
mL	-	milliliter
M	-	molar, mol/L
MM	-	million
mol	-	mole
ng	-	nanogram, 10^{-9} gram
N_2	-	molecular nitrogen
NIST	-	National Institute of Standards and Technology
NO	-	nitric oxide
NO_2	-	nitrogen dioxide
O_2	-	molecular oxygen
O_3	-	ozone
pm	-	afternoon
PM	-	particulate matter
ppb	-	parts per billion (10^9)
ppm	-	parts per million
ppmv	-	parts per million by volume
PRSD	-	percent relative standard deviation
QA	-	quality assurance
QC	-	quality control
rpm	-	revolutions per minute
scf	-	standard cubic feet (68 °F and 29.92"Hg)
scfm	-	standard cubic feet per minute
SRM	-	Standard Reference Material
temp	-	temperature
tph	-	tons per hour
TBtu	-	trillion (10^{12}) British thermal unit
wt	-	weight
v	-	volts
vs	-	versus
° F	-	temperature in degrees Fahrenheit
<	-	less than
>	-	more than
µg	-	microgram, 10^{-6} gram

INTRODUCTION

CONSOL Energy Inc. Research and Development (CONSOL R&D) is determining mercury speciation and removal at 10 coal-fired facilities with SCR/FGD combinations (Table 1). CONSOL R&D conducted flue gas mercury (Hg) measurements on Unit 2 at Plant 3 in June 2005, during "ozone season," when the plant's selective catalytic reduction (SCR) unit was operating. The tests were performed under U. S. Department of Energy (DOE) Cooperative Agreement No. DE-FC26-02NT41589, and the Electric Power Research Institute (EPRI) Agreement No. EP-P13687/C6820. The test program consisted of six sets of measurements across the combustion emission control system that consists of the SCR unit, electrostatic precipitator (ESP), and flue gas desulfurization (FGD) system.

The main goal of the testing at this unit was to examine the effect of varying coal chlorine content on mercury speciation and overall mercury removal. There has been some evidence that coals with higher chlorine content tend to produce flue gas with high percentages of oxidized mercury; since oxidized mercury is more easily removed in wet FGD scrubbers than elemental mercury, this would lead to more mercury removal. At Plant 3, the coal typically contains 50-100 ppm chlorine. The plant engineers agreed to increase the chlorine content of the feed coal by 200 and 350 ppm by spraying a calcium chloride ($CaCl_2$) solution onto the coal before it was loaded into the coal bunkers. The first two sets of measurements were baseline tests, conducted with the plant operating at normal conditions while burning their usual coal without additives. The remaining four sets of measurements were conducted during calcium chloride addition.

The mercury measurements were made using the Ontario-Hydro Flue Gas Hg Speciation Method. The testing conducted by CONSOL R&D is documented in this report.

Table 1. Coal-fired facilities in program

Site #	MW	Air Pollution Control Devices	Coal	Ozone Unit
1	330	SCR / Spray Dryer / Baghouse	Bit	year round
2	245	SCR / Spray Dryer / Baghouse	Bit	year round
3	508	SCR / ESP/ Limestone FGD, inhibited oxidation	Bit	Yes
4 Unit 1	468	ESP/ Limestone FGD, natural oxidation	Bit	(1)
4 Unit 2	468	SCR / ESP/ Limestone FGD, natural oxidation	Bit	year round
5 Unit 1	1,300	SCR / ESP/ Limestone FGD, in-situ oxidation	Bit	Yes
5 Unit 2	1,300	ESP/ Limestone FGD, in-situ oxidation	Bit	(1)
6 (2)	544	SCR / ESP/ Limestone FGD, ex-situ oxidation	Bit	Yes
7 (2)	566	SCR / ESP/ Limestone FGD, ex-situ oxidation	Bit	Yes
8	684	SCR / ESP / Lime FGD, ex-situ oxidation	Bit	Yes
9	640	SCR / ESP/ Lime FGD, inhibited oxidation	Bit	Yes
10	1,300	SCR / ESP/ Lime FGD, inhibited oxidation	Bit	Yes

(1) SCR was not installed when tests were conducted.
(2) Tests were also conducted during non-ozone seasons while flue gas bypassed SCR.

HOST UTILITY DESCRIPTION

Plant 3 Unit 2 is a pulverized coal combustion unit that fires a low-chlorine (typically <100 ppm Cl) bituminous coal with a rated net output of 508 megawatts. The unit typically burns bituminous coal containing approximately 3-4% sulfur. Emission control devices include selective catalytic reduction (SCR), electrostatic precipitator (ESP), and limestone-based, inhibited oxidation, wet flue gas desulfurization (FGD). Anhydrous ammonia is injected in front of the honeycomb-type SCR catalyst beds (provided by KWH) to react with NOx. The SCR unit is operated only during the ozone season. Particulate matter is removed by two ESPs arranged in parallel. Each ESP has three fields and 24 ash hoppers, arranged in three rows of eight hoppers each. The FGD was designed for 90% sulfur dioxide (SO_2) reduction[1]. The FGD sludge is dewatered, fixated, and placed in a nearby landfill. Flue gas from the unit is exhausted to the atmosphere through a 19-foot diameter flue liner which is housed in a 700-foot stack.

MERCURY SAMPLING RESULTS

I. Test Matrix

Six tests were conducted simultaneously at five locations: SCR inlet, SCR outlet, air heater inlet, FGD inlet and stack. The test matrix is shown in Table 2. Tests 1 and 2 were conducted to establish the baseline in which the boiler burned coal without any

[1] U.S. Department of Energy, Energy Information Administration, F767 database for year 2003.

additive. Tests 3 and 4 were conducted on the next day, while the injection rate of a 10% $CaCl_2$ solution was maintained at 2.3 gallon/min, which was designed to simulate an additional 200 ppm coal chloride content. The last two tests were conducted on the next day, while the injection rate of a 10% $CaCl_2$ solution was maintained at 4.3 gallon/min, which was designed to simulate an additional 350 ppm coal chloride content. The chlorine addition system was designed, installed, and operated by Mintec-Momar (Momar) personnel. Momar provides the dust suppression services to the plant and utilized an existing dust suppression system pump and plumbing at the coal feed conveyer belt feeding the coal storage bunker. This existing dust suppression system was modified by installing additional spray nozzles to better distribute the calcium chloride solution on the coal. The Ontario Hydro Method (ASTM Method D-6784-02) was used to perform the measurements. Mercury measurements were performed with a maximum duration of 160 minutes. Details of sampling conditions are provided later in this report.

To calculate the material balance, CONSOL R&D and plant personnel obtained process samples (coal, bottom ash, ESP ash, limestone slurry, FGD slurry, FGD makeup water, and mist eliminator wash water) simultaneously during the gas sampling periods. CONSOL R&D performed all the laboratory sample analyses. Detailed results of analyses are included in this report.

Table 2. Sampling test matrix

Date	Activity	Flue Gas Sampling					Process Sampling						
		SCR Inlet	SCR Outlet	Air Heater Outlet	FGD Inlet	Stack	Coal	Bottom Ash	ESP Ash	Limestone Slurry	FGD Slurry	ME Wash Water	FGD Makeup
6/6/05	Arrive, Setup	---	---	---	---	---	---	---	---	---	---	---	---
6/7/05	Tests 1 & 2	X	X	X	X	X	X	X	X	X	X	X	X
6/8/05	Tests 3 & 4	X	X	X	X	X	X	X	X	X	X	X	X
6/9/05	Tests 5 & 6	X	X	X	X	X	X	X	X	X	X	X	X
	Pack, Demobilize	---	---	---	---	---	---	---	---	---	---	---	---

II. Flue Gas Mercury Sampling Results

Figure 1 shows the mercury speciation for the six tests conducted at each location. All gas streams were sampled isokinetically. The lab analyses of the Ontario Hydro impinger solutions are included in Appendix C. The test results at each sampling location are discussed in the following sections. Tables 3-7 list the measured Ontario Hydro sampling mercury concentrations and the mercury mass flow at each location. The mass flow rates were calculated using the measured concentration times the volumetric gas flow rate. The volumetric gas flow rate was measured at the stack; the flow rates at other locations were calculated using the stack flow rate, with a flow-difference correction for air in-leakage based on the locations' flue gas oxygen concentrations. Accurate measurements of the gas flow rate were not possible at locations other than the stack because a full pitot traverse was not possible due an insufficient number of access ports or due to large duct cross-sections.

A. SCR inlet

Six mercury measurements were conducted at the SCR inlet. Table 3 summarizes the mercury measurements at the SCR inlet. The results show that more than 99% of the mercury was in the gas phase and less than 1% of the mercury was in the particulate form (Hg^{part}). The high percentage of gas phase mercury is expected due to the gas temperature (729 °F) at this location. The percentage of the total mercury in the oxidized form (Hg^{++}) was 63% for Tests 1-2, 61% for Tests 3-4, and 42% for Tests 5-6; this decrease in the percentage of oxidized mercury with the increasing coal chlorine content was surprising because the chlorine was added with the expectation that it would increase the percentage of oxidized mercury.

Table 3. Flue gas mercury speciation at the SCR inlet

Date	Test No.	$CaCl_2$ Addition	Hg Concentration, µg/m^3 (dry std conditions)				Hg Flow, mg/sec			
			Hg^{part}	Hg^{++}	Hg^{0}	Hg^{total}	Hg^{part}	Hg^{++}	Hg^{0}	Hg^{total}
06/07	1	(none)	3.41×10^{-5}	9.35	5.73	15.1	1.79×10^{-5}	4.89	3.00	7.89
06/07	2	(none)	3.98×10^{-5}	6.88	3.78	10.7	2.09×10^{-5}	3.60	1.98	5.58
		Average	3.70×10^{-5}	8.12	4.76	12.9	1.94×10^{-5}	4.25	2.49	6.74
		Standard Deviation	4.04×10^{-6}	1.75	1.38	3.13	2.13×10^{-6}	0.91	0.72	1.63
		PRSD	11%	22%	29%	24%	11%	21%	29%	24%
06/08	3	200 ppm	3.11×10^{-5}	5.32	4.31	9.6	1.70×10^{-5}	2.90	2.35	5.25
06/08	4	200 ppm	3.36×10^{-5}	8.43	4.39	12.8	1.75×10^{-5}	4.40	2.29	6.70
		Average	3.23×10^{-5}	6.88	4.35	11.2	1.73×10^{-5}	3.65	2.32	5.97
		Standard Deviation	1.76×10^{-6}	2.20	0.06	2.25	4.16×10^{-7}	1.06	0.04	1.02
		PRSD	5%	32%	1%	20%	2%	29%	2%	17%
06/09	5	350 ppm	3.50×10^{-5}	4.51	7.57	12.1	1.72×10^{-5}	2.21	3.71	5.92
06/09	6	350 ppm	3.33×10^{-5}	4.97	5.51	10.5	1.54×10^{-5}	2.30	2.55	4.86
		Average	3.42×10^{-5}	4.74	6.54	11.3	1.63×10^{-5}	2.26	3.13	5.39
		Standard Deviation	1.20×10^{-6}	0.33	1.45	1.12	1.22×10^{-6}	0.07	0.82	0.75
		PRSD	4%	7%	22%	10%	7%	3%	26%	14%

B. SCR outlet

Six mercury measurements were conducted at the SCR outlet location. Table 4 summarizes the mercury measurements at this location. Most (76-83%) of the mercury was vapor-phase elemental mercury (Hg^{0}). It is not clear why the percentage of elemental mercury was higher at the SCR outlet than at the SCR inlet; this was not the typical situation at the other plants sampled in this project. Possible sources of error include: 1) Sampling error due to sampling only 1 of 3 ducts at the SCR inlet and 1 of 2 ducts at the SCR outlet; 2) Ash captured in the in-duct filter altering the speciation in

the sampled gas at one or both locations; or 3) ammonia slip from the SCR interfering with the sampling method.

Table 4. Flue gas mercury speciation at the SCR outlet

Date	Test No.	$CaCl_2$ Addition	Hg Concentration, µg/m^3 (dry std conditions)				Hg Flow, mg/sec			
			Hg^{part}	Hg^{++}	Hg^{0}	Hg^{total}	Hg^{part}	Hg^{++}	Hg^{0}	Hg^{total}
06/07	1	(none)	2.21 x10^{-5}	1.37	11.50	12.87	1.14E-05	0.70	5.91	6.61
06/07	2	(none)	1.84 x10^{-5}	2.35	7.14	9.48	9.46E-06	1.21	3.67	4.88
		Average	2.03 x10^{-5}	1.86	9.32	11.2	1.04 x10^{-5}	0.95	4.79	5.75
		Standard Deviation	2.65 x10^{-6}	0.69	3.09	2.39	1.36 x10^{-6}	0.36	1.58	1.23
		PRSD	13%	37%	33%	21%	13%	37%	33%	21%
06/08	3	200 ppm	3.26 x10^{-5}	2.60	7.26	9.86	1.66 x10^{-5}	1.33	3.70	5.03
06/08	4	200 ppm	2.90 x10^{-5}	2.69	8.05	10.74	1.50 x10^{-5}	1.39	4.16	5.54
		Average	3.08 x10^{-5}	2.65	7.65	10.3	1.58 x10^{-5}	1.36	3.93	5.28
		Standard Deviation	2.59 x10^{-6}	0.06	0.56	0.62	1.18 x10^{-6}	0.04	0.32	0.37
		PRSD	8%	2%	7%	6%	7%	3%	8%	7%
06/09	5	350 ppm	2.87 x10^{-5}	2.04	10.23	12.27	1.41 x10^{-5}	1.00	5.01	6.01
06/09	6	350 ppm	2.82 x10^{-5}	5.11	11.81	16.92	1.30 x10^{-5}	2.35	5.44	7.79
		Average	2.84 x10^{-5}	3.57	11.02	14.6	1.35 x10^{-5}	1.68	5.23	6.90
		Standard Deviation	3.85 x10^{-7}	2.17	1.12	3.29	7.75 x10^{-7}	0.96	0.30	1.26
		PRSD	1%	61%	10%	23%	6%	57%	6%	18%

C. Air heater outlet

Six mercury measurements were conducted at the air heater outlet location. Table 5 summarizes the mercury measurements at this location. The percentage of the total mercury in the oxidized form (Hg^{++}) was 91 to 97% for all six tests. The percentage of the total mercury in the elemental form (Hg^{++}) was 9% for Tests 1-2, 5% for Tests 3-4, and 3% for Tests 5-6. Less than 1% of the mercury was in the particulate form (Hg^{part}); the gas temperature (355 °F) at this location was too high for substantial mercury capture on the fly ash.

Table 5. Flue gas mercury speciation at the air heater outlet

Date	Test No.	$CaCl_2$ Addition	Hg Concentration, µg/m^3 (dry std conditions)				Hg Flow, mg/sec			
			Hg^{part}	Hg^{++}	Hg^{0}	Hg^{total}	Hg^{part}	Hg^{++}	Hg^{0}	Hg^{total}
06/07	1	(none)	6.29 x10^{-5}	10.4	1.03	11.5	3.87 x10^{-5}	6.41	0.63	7.04
06/07	2	(none)	9.37 x10^{-5}	9.02	0.91	9.94	5.66 x10^{-5}	5.45	0.55	6.00
		Average	7.83 x10^{-5}	9.73	0.97	10.7	4.76 x10^{-5}	5.93	0.59	6.52
		Standard Deviation	2.18 x10^{-5}	0.99	0.08	1.08	1.27 x10^{-5}	0.68	0.06	0.74
		PRSD	28%	10%	9%	10%	27%	11%	10%	11%
06/08	3	200 ppm	8.54 x10^{-5}	14.1	0.52	14.6	5.30 x10^{-5}	8.74	0.32	9.06
06/08	4	200 ppm	1.12 x10^{-4}	11.8	0.79	12.6	6.73 x10^{-5}	7.06	0.48	7.54
		Average	9.88 x10^{-5}	12.9	0.66	13.6	6.01 x10^{-5}	7.90	0.40	8.30
		Standard Deviation	1.89 x10^{-5}	1.64	0.19	1.44	1.01 x10^{-5}	1.19	0.11	1.08
		PRSD	19%	13%	30%	11%	17%	15%	27%	13%
06/09	5	350 ppm	2.57 x10^{-4}	13.6	0.47	14.0	1.49 x10^{-4}	7.86	0.27	8.14
06/09	6	350 ppm	1.18 x10^{-4}	13.7	0.47	14.2	6.44 x10^{-5}	7.49	0.26	7.75
		Average	1.88 x10^{-4}	13.7	0.47	14.1	1.07 x10^{-4}	7.68	0.26	7.94
		Standard Deviation	9.86 x10^{-5}	0.12	0.003	0.11	5.99 x10^{-5}	0.26	0.01	0.27
		PRSD	53%	1%	1%	1%	56%	3%	5%	3%

D. FGD inlet

Six mercury measurements were conducted at the FGD inlet location. Table 6 summarizes the mercury measurements. The percentage of the total mercury in the oxidized form (Hg^{++}) was 86 to 94% for all six tests. The percentage of the total mercury in the elemental form (Hg^{++}) was 6% for Tests 1-2, 10% for Tests 3-4, and 12% for Tests 5-6; this increase in the elemental mercury fraction with increasing coal chlorine content was not expected. The particulate filter in Test 3 was lost when the filter holder came off during sampling probe removal from the duct. The particulate mercury is less than 1% of the total mercury at this location during the other five tests; therefore, the lost filter was inconsequential.

Table 6. Flue gas mercury speciation at the FGD inlet

Date	Test No.	$CaCl_2$ Addition	Hg Concentration, µg/m^3 (dry std conditions)				Hg Flow, mg/sec			
			Hg^{part}	Hg^{++}	Hg^{0}	Hg^{total}	Hg^{part}	Hg^{++}	Hg^{0}	Hg^{total}
06/07	1	(none)	2.92×10^{-2}	10.7	0.61	11.4	1.82×10^{-2}	6.67	0.38	7.07
06/07	2	(none)	9.89×10^{-4}	11.2	0.81	12.0	6.11×10^{-4}	6.92	0.50	7.41
		Average	1.51×10^{-2}	11.0	0.71	11.7	9.39×10^{-3}	6.79	0.44	7.24
		Standard Deviation	1.99×10^{-2}	0.35	0.13	0.47	1.24×10^{-2}	0.18	0.08	0.24
		PRSD	132%	3%	19%	4%	132%	3%	18%	3%
06/08	3	200 ppm	-	11.2	1.35	12.5	-	6.77	0.82	7.60
06/08	4	200 ppm	2.09×10^{-3}	10.0	1.13	11.2	1.26×10^{-3}	6.05	0.68	6.73
		Average	2.09×10^{-3}	10.6	1.24	11.8	1.26×10^{-3}	6.41	0.75	7.17
		Standard Deviation	-	0.79	0.16	0.95	-	0.51	0.10	0.61
		PRSD	-	7%	13%	8%	-	8%	13%	8%
06/09	5	350 ppm	2.14×10^{-3}	10.6	1.74	12.3	1.27×10^{-3}	6.28	1.04	7.31
06/09	6	350 ppm	2.20×10^{-3}	10.8	1.04	11.9	1.24×10^{-3}	6.11	0.59	6.70
		Average	2.17×10^{-3}	10.7	1.39	12.1	1.26×10^{-3}	6.19	0.81	7.00
		Standard Deviation	3.81×10^{-5}	0.18	0.49	0.32	2.33×10^{-5}	0.12	0.32	0.44
		PRSD	2%	2%	36%	3%	2%	2%	39%	6%

E. Stack

Six mercury measurements were conducted at the stack. Table 7 summarizes the mercury measurements. The oxidized mercury concentration at this location is substantially less than at the FGD inlet because much of the oxidized mercury has been removed in the FGD scrubber. The elemental mercury at the stack, compared to the FGD inlet, was higher in some tests and lower in others, with no apparent correlation with coal chlorine content or any other recorded factor. The change in elemental mercury across the FGD scrubber ranged from a decrease of 0.47 mg/sec (Test 5) to an increase of 0.47 mg/sec (Test 1), with an average over all six tests of an increase of 0.10 mg/sec.

Table 7. Flue gas mercury speciation at the stack

Date	Test No.	$CaCl_2$ Addition	Hg Concentration, µg/m^3 (dry std conditions)				Hg Flow, mg/sec			
			Hg^{part}	Hg^{++}	Hg^{0}	Hg^{total}	Hg^{part}	Hg^{++}	Hg^{0}	Hg^{total}
06/07	1	(none)	6.64 x10^{-3}	2.01	1.36	3.38	4.16 x10^{-3}	1.26	0.85	2.12
06/07	2	(none)	2.32 x10^{-3}	1.18	1.26	2.44	1.42 x10^{-3}	0.72	0.77	1.50
		Average	4.48 x10^{-3}	1.60	1.31	2.91	2.79 x10^{-3}	0.99	0.81	1.81
		Standard Deviation	3.06 x10^{-3}	0.59	0.07	0.66	1.94 x10^{-3}	0.38	0.06	0.44
		PRSD	68%	37%	6%	23%	70%	38%	7%	24%
06/08	3	200 ppm	3.59 x10^{-3}	1.38	1.26	2.64	2.20 x10^{-3}	0.84	0.77	1.61
06/08	4	200 ppm	2.35 x10^{-3}	0.91	1.55	2.46	1.45 x10^{-3}	0.56	0.95	1.52
		Average	2.97 x10^{-3}	1.15	1.40	2.55	1.82 x10^{-3}	0.70	0.86	1.57
		Standard Deviation	8.81 x10^{-4}	0.33	0.21	0.12	5.31 x10^{-4}	0.20	0.13	0.07
		PRSD	30%	29%	15%	5%	29%	28%	15%	4%
06/09	5	350 ppm	2.45 x10^{-3}	1.03	0.94	1.97	1.48 x10^{-3}	0.62	0.57	1.19
06/09	6	350 ppm	7.80 x10^{-2}	1.81	1.28	3.16	4.37 x10^{-2}	1.01	0.72	1.77
		Average	4.02 x10^{-2}	1.42	1.11	2.57	2.26 x10^{-2}	0.82	0.64	1.48
		Standard Deviation	5.34 x10^{-2}	0.55	0.24	0.84	2.99 x10^{-2}	0.28	0.11	0.41
		PRSD	133%	39%	22%	33%	132%	34%	17%	28%

III. SCR/FGD System Hg Removal

Table 8 summarizes the flue gas mercury removal for the baseline tests (Tests 1 and 2) and the chloride addition tests (Tests 3-6). In the baseline tests the average coal-to-stack mercury removal was 64%. This is substantially lower than the removals observed on other units with SCR-FGD combinations in this project, which were in the 80-90% range. In the chloride addition tests the average coal-to-stack mercury removal was 70%, which is higher than the baseline test removal, but still less than the 80-90% observed at other plants.[2,3]

[2] DeVito, M. S., Withum, J. A., and Statnick, R. M., "Flue Gas Measurements from Coal-Fired Boilers Equipped with Wet Scrubbers," Int. J. of Environ. Pollution 17 (1/2), 2002, p. 126-142

[3] Evaluation of Mercury Emissions from Coal-Fired Facilities with SCR and FGD Systems - Topical Report Nos. 1 and 4 through 8, U.S. DOE Cooperative Agreement DE-FC26-02NT41589

Table 8. Flue gas mercury removal

Date	Test No.	$CaCl_2$ Addition	Based on Ontario Hydro Measurements at the Air Heater Outlet and Stack, mg Hg^{total} /sec			Based on Mercury in the Coal Feed and Ontario Hydro Measurements at the Stack, mg Hg^{total} /sec		
			Air Heater Outlet	Stack Emissions	% Reduction	Coal Feed	Stack Emissions	% Reduction
06/07	1	(none)	7.04	2.12	70	5.31	2.12	60
06/07	2	(none)	6.00	1.50	75	4.80	1.50	69
		Average	6.52	1.81	73	5.05	1.81	64
		Standard Deviation	0.74	0.44	3.6	0.36	0.44	6.2
		PRSD	11%	24%	5%	7%	24%	10%
06/08	3	200 ppm	9.06	1.61	82	5.09	1.61	68
06/08	4	200 ppm	7.54	1.52	80	5.19	1.52	71
		Average	8.30	1.57	81	5.14	1.57	70
		Standard Deviation	1.08	0.07	1.6	0.07	0.07	1.8
		PRSD	13%	4%	2%	1%	4%	3%
06/09	5	350 ppm	8.14	1.19	85	4.97	1.19	76
06/09	6	350 ppm	7.75	1.77	77	4.86	1.77	64
		Average	7.94	1.48	81	4.91	1.48	70
		Standard Deviation	0.27	0.41	5.8	0.07	0.41	8.9
		PRSD	3%	28%	7%	2%	28%	13%

The reductions at the air heater outlet are higher than the coal-to-stack reductions because the mercury mass flow rate at the air heater outlet is higher than the coal mercury mass flow rate. The reason for the disagreement between the mercury flow rates was not determined; however, since only one of two ducts (the “A” duct) was sampled, it’s possible that the mercury is not evenly distributed between the two ducts. Other sources of error could include errors in flue gas flow rate measurements, flue gas mercury concentration measurements, coal mercury determinations, and coal flow rates are all possible reasons.

IV. Mercury Material Balance

An important criterion to gauge the overall quality of the tests is to conduct a mercury mass balance to account for the mercury entering and leaving the plant during the tests. The mercury material balance closure is the total mercury output from the plant divided by the total mercury input (expressed as %). The total mercury input is the sum of the amounts of mercury entering the system from coal, limestone slurry, mist eliminator (ME) wash water, and make-up water. The total mercury output is the sum of the amounts of mercury leaving the system via bottom ash, ESP hopper ash, FGD slurry, and stack flue gas.

Table 9 summarizes the mercury material balance closures for the tests conducted at this unit. The mercury material balance closures ranged from 92% to 115%. The material balance closures for mercury for all individual tests are within our QA/QC criterion of 70-130% for a single test. The average material balance closure is 101% for the six tests, within our QA/QC criterion of 80-120% for multiple tests. The measurements, calculations, and assumptions for calculating the material balances are described later in this report.

Table 9. Mercury material balance

Test No.	Test #1	Test #2	Test #3	Test #4	Test #5	Test #6
Hg input from Coal Fired (mg/sec)	5.31	4.80	5.09	5.20	4.97	4.87
Hg input from limestone slurry solids (mg/sec)	0.15	0.23	0.20	0.18	0.20	0.21
Hg input from limestone slurry filtrate (mg/sec)	0.04	0.04	0.05	0.47	0.26	0.17
Hg input from FGD make-up solids (mg/sec)	1.82	1.68	0.63	1.16	0.75	0.49
Hg input from FGD make-up liquid (mg/sec)	0.08	0.02	0.03	0.03	0.03	0.02
Hg input from ME wash water (mg/sec)	0.02	0.02	0.02	0.02	0.02	0.02
Total Hg input (mg/sec)	7.42	6.78	6.02	7.06	6.23	5.78
Hg output via Bottom Ash (mg/sec)	0.001	0.001	0.001	0.001	0.001	0.001
Hg output via ESP Hopper Ash (mg/sec)	0.32	0.27	0.24	0.25	0.38	0.40
Hg output via FGD Slurry Solids (mg/sec)	5.01	4.40	4.19	5.06	4.78	4.36
Hg output via FGD Slurry Filtrate (mg/sec)	0.02	0.07	0.03	0.03	0.04	0.07
Hg output via stack flue gas (mg/sec)	2.12	1.50	1.61	1.51	1.19	1.78
Total Hg output (mg/sec)	7.47	6.23	6.08	6.86	6.41	6.61
Hg material balance closure (output / input)	101%	92%	101%	97%	103%	115%
Average Hg material balance closure	101 ± 8 (%)					

Effect of Coal Chlorine Content

This plant was chosen for study because it typically burns a low-chlorine coal (ca. 100 ppm Cl); low chlorine coals tend to produce less oxidized mercury and more elemental mercury at the air heater outlet compared to higher chlorine coals[4]. Since wet FGD scrubbers capture very little (if any) elemental mercury, the mercury removal from plants burning low-chlorine coals tends to be lower than from plants burning coal with more chlorine. Thus, the addition of calcium chloride to the coal at this plant was expected to

[4] Chu, P. "Effect of SCRs on Mercury," EUEC Conference, Tuscon, AZ, January 23, 2006.

increase the percentage of oxidized mercury at the air heater outlet, compared to the baseline tests. However, the unexpected result of the baseline tests was a high percentage of oxidized mercury (91%) at the air heater outlet, perhaps due to a higher than expected coal chlorine content (144-491 ppm). As a result, there was not much room for additional mercury oxidation when chlorine was added to the coal. Table 10 shows a comparison of the mercury oxidation during baseline tests with the chloride addition tests. Although the table shows a slightly higher percentage of oxidized mercury in the chloride addition tests, the difference is not substantial. There is very little particulate mercury because the temperature at this location is above 350 °F.

Table 10. Comparison of Average Mercury Speciation at the Air Heater Outlet

	Tests 1 and 2 (no added Cl)	Tests 3 and 4 (200 ppm Cl added)	Tasks 5 and 6 (350 ppm Cl added)
Hg^{part}	0%	0%	0%
Hg^{++}	91%	95%	97%
Hg^{0}	9%	5%	3%

Although the level of oxidation at the air heater outlet was over 90%, this did not result in 90% mercury removal in the scrubber. Table 11 shows that mercury removal across the FGD was 75% in the baseline tests and 78 to 79% in the chloride addition tests. The FGD scrubber removals are higher than the coal-to-stack removals shown in Table 8 because the mercury flow rate at the FGD inlet is higher than the coal mercury flow rate. At the FGD inlet sampling location, the entire duct cross section was not traversed during sampling; a single point was sampled in one sampling port. Furthermore, the sampling location was immediately downstream from the point where the “A” and “B” induced draft (ID) fan outlet ducts converge into a single duct. Thus, there is potential for flow and concentration stratification at this location. The single point measurement at the FGD inlet cannot be considered representative of all of the flue gas at this location.

Table 11. Comparison of Average Mercury Reductions Across the FGD Scrubber

	Tests 1 and 2 (no added Cl)			Tests 3 and 4 (200 ppm Cl added)			Tasks 5 and 6 (350 ppm Cl added)		
	FGD Inlet, mg Hg/sec	Stack, mg Hg/sec	Reduction	FGD Inlet, mg Hg/sec	Stack, mg Hg/sec	Reduction	FGD Inlet, mg Hg/sec	Stack, mg Hg/sec	Reduction
Hg^{part}	<0.01	<0.01		<0.01	<0.01		<0.01	<0.01	
Hg^{++}	6.79	0.99	85%	6.41	0.70	89%	6.19	0.82	87%
Hg^{0}	0.44	0.81	-84%	0.75	0.86	-15%	0.81	0.64	21%
Total Hg	7.24	1.81	75%	7.17	1.57	78%	7.00	1.48	79%

EXPERIMENTAL AND SAMPLING METHODS

CONSOL R&D performed flue gas mercury determinations using the Ontario-Hydro sampling method. As a quality assurance/quality control (QA/QC) measure, samples of the coal, bottom ash, FGD slurry, limestone slurry, and ESP ash, were taken to determine a mercury balance across the system.

I. Flue Gas Sampling Locations and Sampling Points

Five sampling locations, the SCR inlet, SCR outlet, air heater outlet (upstream of the ESP), FGD inlet, and stack outlet, were tested. Figure 2 is a flow schematic indicating the sampling locations at this unit. Individual sampling locations are detailed in the following sections.

A. SCR inlet

Sampling ports are located in the flue gas ductwork between the economizer exit and the SCR inlet. The flue gas is routed through three separate rectangular ducts, from the economizer to the SCR. Sampling ports are located on the top of the horizontal ductwork. However only two ports, located in the western-most duct (Duct A), were accessible. The other ports were utilized by the SCR NOx monitoring system, or were blocked by the monitoring system piping. A glass-lined, stainless steel probe was used to sample at four points in one of the available ports. The sampling train was assembled in an EPA Method 17 configuration using an in-stack quartz-fiber thimble filter media. Each point was sampled for thirty minutes resulting in a total sampling time of 120 minutes per test. Parametric readings were recorded at ten minute intervals.

Preliminary pitot surveys conducted on June 7, 2005 indicated that the gas flow was straight, not cyclonic or swirling. Mercury measurements were conducted with the

sampling nozzle oriented parallel to and directly into the flow. Figure 3 is a photograph of the mercury sampling train at the SCR inlet.

B. SCR outlet

Sampling ports are located in the flue gas ductwork between the SCR exit and the air heater inlets. The flue gas is routed through two separate rectangular ducts, each having ten sampling ports. Flue gas was sampled using a glass-lined, stainless steel probe to sample four points in a single, centrally-located port in the “A” duct. The sampling train was assembled in an EPA Method 17 configuration using an in-stack quartz-fiber thimble filter media. Each point was sampled a duration of thirty minutes resulting in a total sampling time of 120 minutes per test. Parametric readings were recorded at ten minute intervals.

Preliminary pitot surveys indicated that the gas flow was straight, not cyclonic or swirling. Mercury measurements were conducted with the sampling nozzle oriented parallel to and directly into the flow. Figure 4 is a photograph of the mercury sampling train at the SCR outlet.

C. Air heater outlet

Flue gas exits the “A” and “B” air heaters and passes through the “A” and “B” ESP modules, respectively. Each duct is equipped with six sampling ports at the ESP inlet. Two ports in the “A” duct were used for sampling using a glass-lined, stainless steel probe to sample three points in each port. The sampling train was assembled in an EPA Method 17 configuration using an in-stack quartz-fiber thimble filter media. Each point was sampled a duration of twenty minutes resulting in a total sampling time of 120 minutes per test. Figure 5 is a photograph of the mercury sampling train at the air heater outlet location.

D. FGD inlet

Flue gas exits the “A” and “B” ESP’s and passes through the “A” and “B” induced draft (ID) fans, respectively. The two ID fan outlet ducts converge into a single duct immediately upstream of the FGD inlet. A single point was sampled in one port at the duct center for a total sampling time of 120 minutes per test. Figure 6 is a photograph of the mercury sampling train on the FGD inlet location.

E. Stack

The stack sampling ports are located at the 260-foot level platform on the stack. Three of the four sampling ports were accessible with a glass-lined stainless steel probe having an effective length of eight feet. Each port traverse consisted of three sample points; ports A and C were sampled at ten minutes per point and Port B at 20 minutes per point, resulting in a total sampling time of 120 minutes. Preliminary pitot surveys indicated that the gas flow was axial. Mercury measurements were conducted with the nozzle oriented horizontally, directly into the flow. Figure 7 is a photograph of the mercury sampling train on the stack location.

II. Flue Gas Mercury Measurements

Flue gas mercury measurements were conducted using the Ontario-Hydro mercury speciation train. A schematic of the sampling train is shown in Figure 8.

The flue gas was extracted from the duct and pulled through a heated glass-lined probe and quartz filter. Total particulate matter mass loading was calculated from the solids collected prior to and on the filter. Probe temperatures were set at 325 ± 25 °F at the SCR inlet and outlet, the air heater outlet and the FGD inlet. Probe and filter temperatures were maintained at 250 ± 25 °F at the stack. Where particle loading is high, the probe and filter are maintained as close as practical to the flue gas temperature.

Mercury collected prior to and on the filter is assumed to be Hg^{part}. The flue gas exits the quartz filter and passes through a series of chilled impingers. The first three impingers are filled with 100 mL of a 1M-potassium chloride (KCl) solution. It is assumed that these impingers capture Hg^{++} in the flue gas. The next impinger is filled with 100 mL of a 5% nitric acid and 10% hydrogen peroxide (H_2O_2) solution. The purpose of this impinger is to remove SO_2 from the flue gas to preserve the oxidizing strength of the two downstream impingers with acidic potassium permanganate ($KMnO_4$) solution. Mercury collected in this impinger is assumed to be Hg^0. The next two impingers are filled with 100 mL of an acidic $KMnO_4$ solution. It is assumed that these impingers capture Hg^0. The next impinger is blank to catch any excess moisture. The gas exits the impinger train through a silica gel-filled impinger that removes the moisture from the flue gas. The mercury species collected by the Ontario-Hydro sampling train component are listed in Table 12.

Table 12. Mercury speciation by train component

Train Component	Species Measured
Probe & Nozzle Rinse	Hg^{part}
Quartz Filter	Hg^{part}
KCl Impingers	Hg^{++}
HNO_3/H_2O_2 Impinger	Hg^0
$KMnO_4$ Impingers	Hg^0
HCl Rinse of $KMnO_4$ Impingers	Hg^0

The absorbing solutions were made fresh daily. The impingers were charged and the sampling components were transported to the required locations. The sampling trains were assembled, pre-heated, and checked for pitot and sample line leaks as detailed in EPA Methods 2 and 5, respectively. After passing the leak-check procedure, the sampling probes were inserted into their respective ducts, in-stack filters were allowed

to heat to stack temperature, and sampling was initiated. Leak checks were also performed during port changes.

Oxygen readings were monitored at the outlet of the sampling train using a Teledyne Model Max 5 portable analyzer (electrochemical O_2 sensor). At the completion of the sampling period, the sample trains were checked for leaks, purged for 10 min, and then disassembled. The components were transported back to the lab trailer for recovery. The mercury concentration of the individual impinger solutions was determined by cold vapor atomic absorption (CVAA) as specified in the methodology. The concentration of mercury on the solids was determined by acid digestion followed by CVAA.

The amount of mercury collected in the impinger solutions was determined as outlined in EPA Method 29 and the Ontario-Hydro Draft Method. An aliquot of the impinger solution was acidified and the mercury is determined using cold vapor-atomic absorption spectroscopy. The atomic absorption spectrometer was calibrated with commercial mercury standard. The calibration was verified using NIST Standard Reference Materials (SRM) 1641D and 1633b. The calibration was reassessed periodically by analyzing a quality control standard. The instrument was recalibrated as required. Each sample matrix was analyzed as a set and an individual calibration curve was used for each set. Depending on sample type, selected samples were spiked with 2, 5, 10, or 15 ng/ml (ppb) of mercury and reanalyzed. Spike recovery must be within ±30% or the sample is diluted and reanalyzed. Selected samples were analyzed in duplicate. The duplicates must be within ±30% or the analyses are repeated.

Where sufficient solids were collected, particulate mercury was analyzed using a 0.5-1.0 gm ash sample with the direct combustion method (ASTM Method D6722). In cases where the particulate catch was low (primarily stack filters), the entire filter sample was digested with aqua-regia in pressure vessels prior to analysis by CVAA.

III. Coal Sampling and Analysis

A. Coal samples

Plant personnel collected coal samples from the coal feed pipes. Listed in Table 13 are the coal analyses. The coal samples were analyzed for mercury using a direct mercury analyzer following the procedures prescribed in ASTM Method D6722. Detailed analyses of the coal samples collected in each test are presented in Appendix D. The baseline coal contained substantially more chlorine than expected. This plant burns coal that typically contains about 100 ppm chlorine; however, the three coal samples collected during the baseline tests contained 144 to 491 ppm chlorine. A coal sample from the coal feed belt to the bunkers was collected on the last sampling day. The belt sample was taken upstream from the calcium chloride spray; however, this coal sample had a substantial amount of chlorine.

Table 13. Coal sample analyses

Sample Description	Coal Beginning of Test	Coal Beginning of Test	Coal End of Test	Coal Beginning of Test	Coal Beginning of Test	Coal End of Test	Coal Beginning of Test	Coal Beginning of Test	Coal End of Test	Coal Belt
Test No.	1	2	2	3	4	4	5	6	6	
Sample Date	6/7/2005	6/7/2005	6/7/2005	6/8/2005	6/8/2005	6/8/2005	6/9/2005	6/9/2005	6/9/2005	6/9/2005
Ananlytical No.	20052576	20052577	20052578	20052579	20052580	20052581	20052582	20052583	20052584	20052585
Total Moisture (%)	12.22	13.34	12.40	12.02	13.03	13.21	14.11	13.32	13.76	13.73
Moisture, as det'd (%)	6.37	6.47	6.25	6.69	6.13	6.54	6.31	5.94	6.19	5.69
VM (%, dry)	37.11	36.72	36.85	36.87	36.70	36.74	36.65	37.25	36.90	36.46
Ash (%, dry)	10.17	10.64	10.03	10.74	11.29	10.59	11.22	10.91	10.90	11.28
Total Carbon (%, dry)	70.35	70.29	71.46	70.47	69.94	70.15	70.03	70.34	70.32	70.63
Hydrogen (%, dry)	5.28	5.32	5.32	5.31	5.27	5.36	5.09	5.09	5.19	5.07
Nitrogen (%, dry)	1.55	1.51	1.54	1.54	1.53	1.52	1.50	1.47	1.52	1.45
Fixed carbon (%, dry)	52.72	52.64	53.12	52.39	52.01	52.67	52.13	51.84	52.20	52.26
Total Sulfur (%, dry)	3.64	3.54	3.42	3.68	3.75	3.45	3.55	3.63	3.59	3.52
Oxygen, by diff. (%, dry)	9.01	8.70	8.23	8.26	8.22	8.93	8.61	8.56	8.48	8.05
HHV (Btu/lb, dry)	12,984	12,927	12,967	12,910	12,773	12,940	12,799	12,835	12,849	12,782
HHV, MAF (Btu/lb)	14,454	14,466	14,413	14,463	14,399	14,473	14,417	14,407	14,421	14,407
Chlorine (%, dry)	0.0491	0.0144	0.0437	0.0375	0.0458	0.0492	0.0598	0.0813	0.0794	0.0749
Hg (ppm, dry)	0.120	0.110	0.102	0.110	0.123	0.114	0.114	0.107	0.106	0.106
Major Ash Elements (%, dry)										
SiO_2	43.20	43.99	44.68	43.12	43.69	44.86	45.05	44.11	44.77	44.02
Al_2O_3	19.60	20.70	20.63	20.12	19.38	20.24	20.03	19.76	19.95	19.67
TiO_2	0.93	0.93	0.98	0.94	0.91	0.91	0.94	0.95	0.95	0.93
Fe_2O_3	25.51	24.40	24.10	25.82	24.99	22.15	22.11	23.38	23.74	23.14
CaO	3.34	2.50	2.36	2.62	2.99	2.83	3.44	3.88	3.32	3.87
MgO	0.85	0.85	0.91	0.86	0.89	0.89	0.87	0.88	0.87	0.84
Na_2O	0.43	0.41	0.41	0.37	0.40	0.47	0.39	0.47	0.38	0.72
K_2O	2.02	2.21	2.02	1.99	2.00	2.36	1.96	1.94	1.90	1.83
P_2O_5	0.05	0.09	0.07	0.06	0.09	0.05	0.09	0.06	0.07	0.08
SO_3	1.86	1.64	1.69	1.96	2.18	1.90	2.55	2.71	2.15	2.83

IV. Process Sample Collection and Analysis

CONSOL R&D and plant personnel collected samples of bottom ash, ESP hopper ash, limestone slurry, FGD slurry, ME wash water, and FGD makeup water. CONSOL R&D completed comprehensive analyses using a direct mercury analyzer and following prescribed in the procedures of ASTM Method D6722. Detailed results of the analyses of those process samples are presented in Appendix D.

A. Bottom ash

Plant operators collected the bottom ash samples. A single sample was retrieved from the bottom of the boiler on each sampling day. Each sample was stored in a two-gallon bucket.

The samples were filtered to generate a filtrate and a solid residue (i.e., filter cake) before analysis. Listed in Tables 14 and 15 are the results of analyses of the bottom ash samples. The mercury in the solids was less than the detection limit of 0.004 ppm; the mercury in the filtrate sample was below the detection limit of 1.0 μg/L.

Table 14. Results of analyses of bottom ash filtered solids

Sample ID	Bottom Ash Solids Day 1	Bottom Ash Solids Day 2	Bottom Ash Solids Day 3
Test Date	6/7/2005	6/8/2005	6/9/2005
Test No.	1 & 2	3 & 4	5 & 6
Analytical No.	20052586	20052587	20052588
Moisture (%, dry)	0.50	0.80	0.64
Dry Ash (%, dry)	88.16	76.21	81.93
Total Carbon (%, dry)	11.55	25.57	19.34
Total S (% dry)	0.704	0.956	0.952
Chlorine (%, dry)	0.0019	0.0036	0.0031
Hg (ppm, dry)	< 0.004	< 0.004	< 0.004
Major Ash Elements (%, dry)			
SiO_2	36.17	31.61	33.04
Al_2O_3	16.76	14.56	14.43
TiO_2	0.71	0.60	0.62
Fe_2O_3	30.09	24.26	25.05
CaO	3.29	2.90	3.50
MgO	0.7	0.63	0.65
Na_2O	0.3	0.27	0.28
K_2O	1.61	1.48	1.50
P_2O_5	< 0.01	< 0.01	< 0.01
SO_3	1.76	2.39	2.38

Table 15. Results of analyses of bottom ash filtrate

Sample ID	Bottom Ash Liquid Day 3
Test No.	5 & 6
Sample Date	06/09/2005
Analytical No	20052635
Aluminum (mg/L)	0.35
Cacium (mg/L)	671
Iron (mg/L)	0.10
Magnesium (mg/L)	1
Potassium (mg/L)	10.56
Sodium (mg/L)	12.29
Ammonia, as N (mg/L)	<10
Sulfate (mg/L)	386
Chloride (mg/L)	34
Nitrate, as NO_3 (mg/L)	< 2.0
Hg (ng/mL)	< 1.0

B. Limestone slurry

Plant personnel collected a limestone slurry sample of approximately 500-1,000 mL at the start of each flue gas test. Upon arrival at CONSOL R&D's analytical labs, the limestone slurry samples were filtered to generate a filtrate and a solid residue (i.e., filter cake). The air-dried solids and the filtrates were analyzed separately. Listed in Table 16 and 17 are the results of analyses of the limestone slurry solids and filtrate samples.

Table 16. Results of analyses of limestone slurry solids samples

Sample Description	Limestone Slurry Solids - Test #1	Limestone Slurry Solids - Test #2	Limestone Slurry Solids - Test #3	Limestone Slurry Solids - Test #4	Limestone Slurry Solids - Test #5	Limestone Slurry Solids - Test #6
Sample I.D.	LS 1	LS 2	LS 3	LS 4	LS 5	LS 6
Sample Date	06/07/2005		06/08/2005		06/09/2005	
Analytical No.	20052617	20052618	20052619	20052620	20052621	20052622
Solids in original sample (%)	24.8	25.6	25.6	26.8	26	25.1
Specific Gravity of Original Sample	1.175	1.18	1.172	1.17	1.172	1.195
Moisture (%)	0.24	0.24	0.24	0.34	0.22	0.25
Ash (%, dry)	60.09	60.92	60.43	60.73	60.2	60.20
Carbon (%, dry)	11.43	11.18	11.22	11.44	11.45	11.42
Chlorine (%, dry)	0.0065	0.0027	0.0034	0.0052	0.0056	0.0032
Hg (ppm, dry)	0.031	0.048	0.038	0.035	0.037	0.038
Major Ash Elements (%, dry)						
SiO_2	2.44	2.22	2.41	2.36	2.19	2.12
Al_2O_3	0.35	0.32	0.32	0.33	0.29	0.32
TiO_2	0.02	0.01	0.01	0.02	0.01	0.01
Fe_2O_3	0.21	0.21	0.22	0.21	0.21	0.2
CaO	51.29	52.1	51.53	52.02	51.93	52.06
MgO	0.41	0.38	0.37	0.37	0.36	0.34
Na_2O	0.01	0.01	0	0.01	0.02	0
K_2O	0.09	0.08	0.09	0.09	0.08	0.08
P_2O_5	0.02	0.03	0.01	0.1	0.01	0
SO_3	3.31	4.10	3.81	3.63	3.38	3.60

Table 17. Results of analyses of limestone slurry filtrate samples

Sample ID	Limestone Slurry Liquid Test 1	Limestone Slurry Liquid Test 2	Limestone Slurry Liquid Test 3	Limestone Slurry Liquid Test 4	Limestone Slurry Liquid Test 5	Limestone Slurry Liquid Test 6
Test No.	1	2	3	4	5	6
Sample Date	06/07/2005		06/08/2005		06/09/2005	
Analytical No	20052639	20052640	20052641	20052636	20052637	20052638
Aluminum (mg/L)	< 0.50	< 0.50	< 0.50	< 0.50	< 0.50	< 0.50
Cacium (mg/L)	476	1093	579	316	1,022	610
Iron (mg/L)	1.47	< 0.50	< 0.50	< 0.50	< 0.50	2.06
Magnesium (mg/L)	460.8	474.1	466.3	475.4	556.0	532.7
Manganese (mg/L)	< 0.50	< 0.50	< 0.50	< 0.50	< 0.50	< 0.50
Potassium (mg/L)	10.70	10.44	10.61	14.33	15.54	13.12
Silicon (mg/L)	12.27	12.79	12.79	12.71	15.42	14.74
Sodium (mg/L)	339.32	349.21	335.54	378.39	476.54	403.72
Chromium (mg/L)	< 0.50	< 0.50	< 0.50	< 0.50	< 0.50	<0.50
Ammonia, as N (mg/L)	< 10	<10	<10	<10	<10	<10
Sulfate (mg/L)	2,679	3,889	2,840	2,380	4,300	2,980
Chloride (mg/L)	150	120	350	120	500	470
Nitrate, as NO_3 (mg/L)	988	775	682	19	329	1,065
Hg (ng/mL)	2.8	3.2	3.1	33.6	13.3	10.6

C. ESP hopper ash

Plant personnel collected ESP ash from at least three hoppers per row during each test. An approximatly two-pound sample was collected from each hopper and sealed in a labeled zip-top plastic bag. The analyses are listed in Tables 18-21

Table 18. Results of analyses of ESP hopper ash samples collected in Tests 1 and 2

Sample ID	ESP Hopper Ash-1-1A	ESP Hopper Ash-1-4A	ESP Hopper Ash-1-8A	ESP Hopper Ash-1-1B	ESP Hopper Ash-1-4B	ESP Hopper Ash-2-1A	ESP Hopper Ash-2-4A	ESP Hopper Ash-2-8A
Test Date	06/07/2005					06/07/2005		
Test No.	1					2		
ESP Hopper No.	#1A	#4A	#8A	#1B	#4B	#1A	#4A	#8A
Electric Filed No.	1			2		1		
Analytical No.	20052589	20052590	20052591	20052592	20052593	20052594	20052595	20052596
Moisture (%, dry)	0.2	0.2	0.17	0.62	0.84	0.21	0.21	0.24
Ash (%, dry)	95.62	94.24	92	86.6	92.81	96	95	94.83
Carbon (%, dry)	4.24	5.49	8.01	9.81	5.85	3.41	4.88	5.19
Chlorine (%, dry)	<0.005	0.0038	0.0036	0.0011	0.0005	< 0.0005	< 0.0005	< 0.0005
Hg (ppm, dry)	0.084	0.057	0.041	0.193	0.09	0.088	0.064	0.031
Major Ash Element (%, dry)								
SiO_2	44.64	42.81	41.41	40.55	43.00	44.95	44.03	42.95
Al_2O_3	20.49	19.52	18.87	19.78	20.16	19.84	19.28	18.63
TiO_2	0.99	0.95	0.91	1.06	1.04	0.98	0.98	0.91
Fe_2O_3	22.83	23.33	24.1	21	21.64	24.47	24.19	25.65
CaO	2.85	2.92	3.32	2.5	2.33	2.93	2.93	3.3
MgO	0.87	0.84	0.81	0.93	0.93	0.92	0.94	0.91
Na_2O	0.46	0.42	0.41	0.44	0.41	0.38	0.38	0.37
K_2O	2.26	2.12	2.06	2.03	2.05	1.9	1.88	1.8
P_2O_5	< 0.01	< 0.01	< 0.01	0.25	0.11	0.06	0.11	0.08
SO_3	0.95	0.96	0.97	2.49	1.8	1.02	1.02	0.98

Table 19. Results of analyses of ESP hopper ash samples collected in Tests 3 and 4

Sample ID	ESP Hopper Ash-3-1A	ESP Hopper Ash-3-4A	ESP Hopper Ash-3-8A	ESP Hopper Ash-4-1A	ESP Hopper Ash-4-4A	ESP Hopper Ash-4-8A	ESP Hopper Ash-4-2B
Test Date	06/08/2005			06/08/2005			
Test No.	3			4			
ESP Hopper No.	#1A	#4A	#8A	#1A	#4A	#8A	#2B
Electric Field o.	1			1			2
Analytical No.	20052597	20052598	20052599	20052600	20052601	20052602	20052603
Moisture (%, dry)	0.2	0.23	0.34	0.2	0.18	0.16	0.42
Ash (%, dry)	96.51	96.13	95.82	96.4	96.27	95.95	90.82
Carbon (%, dry)	3.44	3.8	4.09	3.44	3.52	3.7	6.65
Chlorine (%, dry)	< 0.0005	< 0.0005	< 0.0005	< 0.0005	< 0.0005	< 0.0005	0.0009
Hg (ppm, dry)	0.087	0.039	0.024	0.088	0.035	0.015	0.11
Major Ash Element (%, dry)							
SiO_2	44.71	43.58	43.99	44.98	45.02	44.81	41.34
Al_2O_3	19.4	18.62	20.7	20.86	20.45	20.42	20.66
TiO_2	0.98	0.94	0.99	1.01	1	0.99	1.13
Fe_2O_3	23.97	24.45	25.27	22.93	23.25	23.98	21.14
CaO	3.25	3.33	3.23	2.9	3.05	3.19	2.69
MgO	0.97	0.97	0.89	0.9	0.92	0.9	0.96
Na_2O	0.4	0.4	0.43	0.44	0.44	0.44	0.48
K_2O	1.92	1.79	2.34	2.28	2.27	2.33	2.39
P_2O_5	0.1	0.09	0.12	0.09	0.08	0.09	0.29
SO_3	1.08	1.06	0.95	0.97	0.96	0.87	2.98

Table 20. Results of analyses of ESP hopper ash samples collected in Test 5

Sample ID	ESP Hopper Ash-5-1A	ESP Hopper Ash-5-4A	ESP Hopper Ash-5-8A	ESP Hopper Ash-5-1B	ESP Hopper Ash-5-4B	ESP Hopper Ash-5-8B
Test Date	06/09/2005	06/09/2005	06/09/2005	06/09/2005	06/09/2005	06/09/2005
Test No.	5					
ESP Hopper No.	#1A	#4A	#8A	#1B	#4B	#8B
Electric Field No.	1			2		
Analytical No.	20052604	20052605	20052606	20052607	20052608	20052609
Moisture (%, dry)	0.17	0.26	0.21	0.29	0.43	0.46
Ash (%, dry)	97.08	94.22	93.42	92.4	93.48	88.98
Carbon (%, dry)	2.93	5.38	6.7	5.28	4.56	10
Chlorine (%, dry)	0.0007	0.0005	0.0007	< 0.0005	< 0.0005	0.0038
Hg (ppm, dry)	0.063	0.088	0.066	0.083	0.114	0.084
Major Ash Element (%, dry)						
SiO_2	46	44.56	43.3	40.77	43.06	40.67
Al_2O_3	20.08	19.55	18.78	20.16	19.62	19.47
TiO_2	1.01	0.98	0.92	1.12	1.06	0.98
Fe_2O_3	23.73	23.27	24.19	20.88	21.15	21.67
CaO	3.33	3.58	3.96	2.75	2.98	2.99
MgO	0.93	0.91	0.88	1	1	0.87
Na_2O	0.47	0.44	0.4	0.48	0.48	0.47
K_2O	2.32	2.18	2.02	2.17	2.16	2.31
P_2O_5	0.09	0.1	0.07	0.27	0.2	0.12
SO_3	1.02	1.12	1.11	2.89	2.31	1.79

Table 21. Results of analyses of ESP hopper ash samples collected in Test 6

Sample ID	ESP Hopper Ash-6-1A	ESP Hopper Ash-6-4A	ESP Hopper Ash-6-8A	ESP Hopper Ash-6-1B	ESP Hopper Ash-6-8B	ESP Hopper Ash-6-6C	ESP Hopper Ash-6-8C
Test Date	06/09/2005	06/09/2005	06/09/2005	06/09/2005	06/09/2005	06/09/2005	06/09/2005
Test No.	6						
ESP Hopper No.	#1A	#4A	#8A	#1B	#8B	#6C	#8C
Electric Field No.	1			2		3	
Analytical No.	20052610	20052611	20052612	20052613	20052614	20052615	20052616
Moisture (%, dry)	0.21	0.19	0.17	0.43	0.3	0.69	0.28
Ash (%, dry)	96.6	94.75	94.14	92.95	90.6	89.91	92.08
Carbon (%, dry)	3.14	4.84	5.71	4.30	7.86	6.65	4.48
Chlorine (%, dry)	< 0.0005	< 0.0005	< 0.0005	< 0.0005	< 0.0005	0.001	0.0008
Hg (ppm, dry)	0.072	0.09	0.063	0.091	0.064	0.061	0.025
Major Ash Element (%, dry)							
SiO_2	45.63	43.9	42.69	41.71	41.12	40.75	41.6
Al_2O_3	20.71	20.11	19.55	22.29	20.45	19.78	21.32
TiO_2	1	0.97	0.92	1.19	1.04	1.05	1.16
Fe_2O_3	22.53	22.92	23.98	19.97	21.85	20.77	19.74
CaO	3.28	3.78	3.86	2.65	2.76	2.35	2.83
MgO	0.89	0.88	0.83	0.99	0.87	0.84	0.95
Na_2O	0.47	0.46	0.44	0.55	0.47	0.46	0.54
K_2O	2.46	2.36	2.29	2.66	2.41	2.33	2.56
P_2O_5	0.07	0.06	0.05	0.28	0.12	0.14	0.26
SO_3	0.98	1.03	1.04	3.07	1.89	3.46	4.57

D. FGD slurry

This unit has four scrubber modules. Plant personnel collected the FGD slurry samples from each FGD module at the two-hour point of each test; a 500-1,000 mL sample was collected. Upon arrival at CONSOL R&D's analytical lab, each slurry sample was filtered to generate a filtrate and a solid residue (i.e., filter cake) samples. The air-dried solids and the filtrates were analyzed separately. Listed in Tables 22 and 23 are the results of analyses of the FGD slurry samples.

Table 22. Results of analyses of FGD slurry solids samples

Sample Description	FGD Slurry Solids - Test #1	FGD Slurry Solids - Test #2	FGD Slurry Solids - Test #3	FGD Slurry Solids - Test #4	FGD Slurry Solids - Test #5	FGD Slurry Solids - Test #6
Sample I.D.	FGD Solids 1	FGD Solids 2	FGD Solids 3	FGD Solids 4	FGD Solids 5	FGD Solids 6
Sample Date	06/07/2005	06/07/2005	06/08/2005	06/08/2005	06/09/2005	06/09/2005
Analytical No.	20052623	20052624	20052625	20052626	20052627	20052628
Solids in original sample (%)	30.42	25.2	30.5	31.7	30.6	32.6
Moisturein Filter Cake (%)	49.2	44.8	43.3	44.4	42.3	46.1
Specific Gravity of Original Sample	1.090	1.092	1.120	1.124	1.150	1.122
Residual Moisture (%)	1.33	0.96	0.77	0.79	1.08	1.12
Ash (%, dry)	97.02	97.89	97.52	97.99	96.85	98.78
Carbon (%, dry)	0.42	0.42	0.52	0.47	0.50	0.53
Chlorine (%, dry)	0.0267	0.0193	0.0283	0.0245	0.0302	0.0476
Hg (ppm, dry)	0.554	0.509	0.507	0.575	0.549	0.515
Major Ash Elements (%, dry)						
SiO_2	1.49	1.49	1.63	1.63	1.91	1.79
Al_2O_3	0.30	0.28	0.28	0.27	0.29	0.27
TiO_2	0.01	0.01	0.01	0.01	0.01	0.01
Fe_2O_3	0.20	0.19	0.19	0.18	0.20	0.18
CaO	41.45	41.42	41.16	41.02	40.00	40.00
MgO	0.15	0.16	0.16	0.17	0.15	0.16
Na_2O	0.08	0.09	0.09	0.10	0.10	0.12
K_2O	0.08	0.06	0.06	0.06	0.06	0.06
P_2O_5	0	0	0	0	0.01	0.01
SO_3	53.09	53.44	53.06	52.6	50.38	49.97

Table 23. Results of analyses of FGD slurry filtrate samples

Sample ID	FGD Slurry Liquid Test 1	FGD Slurry Liquid Test 2	FGD Slurry Liquid Test 3	FGD Slurry Liquid Test 4	FGD Slurry Liquid Test 5	FGD Slurry Liquid Test 6
Test No.	1	2	3	4	5	6
Sample Date	06/07/2005		06/08/2005		06/09/2005	
Analytical No	20052642	20052643	20052644	20052645	20052646	20052647
Aluminum (mg/L)	< 0.50	< 0.50	< 0.50	< 0.50	< 0.50	< 0.50
Cacium (mg/L)	178	325	125	242	133	181
Iron (mg/L)	1.69	0.63	1.07	< 0.50	0.98	1.04
Magnesium (mg/L)	979	848	1,078	1,034	993	1,032
Manganese (mg/L)	1.44	1.23	1.51	1.31	1.43	1.43
Potassium (mg/L)	16.45	14.32	16.37	19.04	18.55	18.47
Silicon (mg/L)	22.61	21.34	23.83	24.64	23.00	24.30
Sodium (mg/L)	699	652	788	798	776	814
Chromium (mg/L)	< 0.50	< 0.50	< 0.50	< 0.50	< 0.50	<0.50
Ammonia, as N (mg/L)	< 10	<10	<10	<10	<10	<10
Sulfate (mg/L)	4,542	4,505	4,733	5,222	4,662	4,632
Chloride (mg/L)	750	1,020	1,630	1,560	1,560	2,320
Nitrate, as NO_3 (mg/L)	492	481	707	738	622	634
Hg (ng/mL)	1.1	2.6	1.8	1.8	2.2	4.1

E. FGD makeup water

Plant personnel collected an FGD makeup water sample of about 500 mL at the start of each test. Upon arrival at CONSOL R&D's analytical lab, each sample was filtered to generate a filtrate and a solid residue (i.e., filter cake) samples. Listed in Tables 24 and 25 are the results of analyses of the makeup water samples.

Table 24. Results of analyses of FGD makeup water solids samples

Sample Description	FGD Makeup Solids - Test #1	FGD Makeup Solids - Test #2	FGD Makeup Solids - Test #3	FGD Makeup Solids - Test #4	FGD Makeup Solids - Test #5	FGD Makeup Solids - Test #6
Sample I.D.	FGD Makeup Solids 1	FGD Makeup Solids 2	FGD Makeup Solids 3	FGD Makeup Solids 4	FGD Makeup Solids 5	FGD Makeup Solids 6
Sample Date	06/07/2005	06/07/2005	06/08/2005	06/08/2005	06/09/2005	06/09/2005
Analytical No.	20052629	20052630	20052631	20052632	20052633	20052634
Solids in original sample (%)	8.9	8.00	3.70	7.89	6.55	9.50
Moisture in Filtered Cake (%)	44.7	46.2	50.8	48.20	53.60	54.50
Specific Gravity of Original Sample	1.043	1.034	1.019	1.032	1.020	1.034
Moisture (%)	2.00	1.90	0.71	0.79	0.55	2.00
Ash (%, dry)	100.07	98.18	99.89	97.07	98.72	96.89
Carbon (%, dry)	0.29	0.54	0.18	0.35	0.23	0.42
Chlorine (%, dry)	0.0189	0.0151	0.0156	0.0086	0.0095	0.0134
Hg (ppm, dry)	0.631	0.585	0.570	0.536	0.556	0.545
Major Ash Elements (%, dry)						
SiO_2	1.55	1.60	1.37	1.39	1.29	1.35
Al_2O_3	0.30	0.31	0.30	0.28	0.27	0.28
TiO_2	0.01	0.02	0.02	0.01	0.01	0.01
Fe_2O_3	0.18	0.20	0.18	0.17	0.16	0.16
CaO	37.21	40.17	40.24	40.27	40.33	39.23
MgO	0.12	0.13	0.11	0.11	0.1	0.11
Na_2O	0.14	0.09	0.11	0.08	0.09	0.08
K_2O	0.08	0.06	0.05	0.06	0.08	0.08
P_2O_5	0.01	< 0.01	< 0.01	< 0.01	< 0.01	< 0.01
SO_3	63.02	50.18	52.35	52.47	53.3	55.27

Table 25 Results of analyses of FGD makeup water filtrate samples

Sample ID	FGD Makeup Liquid Test 1	FGD Makeup Liquid Test 2	FGD Makeup Liquid Test 3	FGD Makeup Liquid Test 4	FGD Makeup Liquid Test 5	FGD Makeup Liquid Test 6
Test No.	1	2	3	4	5	6
Sample Date	06/07/2005		06/08/2005		06/09/2005	
Analytical No	20052648	20052649	20052650	20052651	20052652	20052653
Aluminum (mg/L)	< 0.50	< 0.50	< 0.50	< 0.50	< 0.50	< 0.50
Cacium (mg/L)	251	105	533	296	296	369
Iron (mg/L)	4.67	2.70	1.32	2.25	1.65	1.60
Magnesium (mg/L)	616	811	656	847	915	876
Manganese (mg/L)	1.37	1.40	0.99	1.36	1.34	1.60
Potassium (mg/L)	14.53	14.92	11.66	17.41	18.60	17.06
Silicon (mg/L)	16.80	20.39	18.05	22.22	23.60	22.96
Sodium (mg/L)	1,647	1,158	1,140	987	1,170	965
Chromium (mg/L)	< 0.50	< 0.50	< 0.50	< 0.50	< 0.50	<0.50
Ammonia, as N (mg/L)	< 10	< 10	< 10	< 10	< 10	< 10
Sulfate (mg/L)	4,304	4,784	5,496	5,124	5,688	4,127
Chloride (mg/L)	3,050	1,130	1,100	970	1,260	3,500
Nitrate, as NO_3 (mg/L)	142	439	477	348	444	423
Hg (ng/mL)	2.3	< 1.0	1.0	1.2	1.4	2.3

F. ME wash water samples

The ME wash water was collected by plant personnel from the ME wash water storage tank. About 250 mL of sample was collected each time. Listed in Table 26 are the results of analyses of the ME wash water samples. The concentration of mercury was below the detection limit of 1.0 μg/L for all of the samples.

Table 26. Results of analyses of ME wash water samples

Sample ID	ME Wash Water Test 1	ME Wash Water Test 2	ME Wash Water Test 3	ME Wash Water Test 4	ME Wash Water Test 5	ME Wash Water Test 6
Test No.	1	2	3	4	5	6
Sample Date	06/07/2005		06/08/2005		06/09/2005	
Analytical No	20052654	20052655	20052656	20052657	20052658	20052659
Aluminum (mg/L)	< 0.05	< 0.05	< 0.05	< 0.05	< 0.05	< 0.05
Calcium (mg/L)	85	82	84	85	83	70
Iron (mg/L)	< 0.05	< 0.05	0.15	0.05	0.07	0.11
Magnesium (mg/L)	24.4	23.9	24.5	24.8	24.0	23.9
Manganese (mg/L)	0.18	0.16	0.14	0.16	0.20	0.06
Potassium (mg/L)	1.83	1.60	1.49	1.51	1.67	1.82
Silicon (mg/L)	5.01	4.92	4.83	5.00	4.80	4.82
Sodium (mg/L)	9.07	8.75	8.21	8.46	7.21	7.16
Chromium (mg/L)	< 0.05	< 0.05	< 0.05	< 0.05	< 0.05	< 0.05
Ammonia, as N (mg/L)	< 10	< 10	< 10	< 10	< 10	< 10
Sulfate (mg/L)	41.0	39.8	39.6	40.7	38.4	38.5
Chloride (mg/L)	40.0	30.0	33.0	33.0	30.0	35.0
Nitrate, as NO_3 (mg/L)	< 2.0	< 2.0	< 2.0	< 2.0	< 2.0	< 2.0
Hg (ng/mL)	< 1.0	< 1.0	< 1.0	< 1.0	< 1.0	< 1.0

QUALITY ASSURANCE/QUALITY CONTROL

The sampling and analysis QA/QC procedures are described below.

- Personnel specifically trained and experienced in power plant sampling methods, including the Ontario-Hydro mercury sampling method, conducted all sampling,
- The sampling equipment was maintained and calibrated as required,
- Consistent sample preparation and recovery procedures were used,
- Samples were logged and tracked under the direction of sample team Group Leader,
- Individual calibration curves were developed for each sample matrix,
- NIST Standard Reference Material (SRM) and lab QC samples were analyzed to verify calibration curves,
- Duplicates of selected samples were analyzed to assure repeatability,
- Analyses of selected "spiked" samples were analyzed to assure sample recovery, and
- Interim data were reviewed to assure sample completeness.

All samples were obtained using the procedures described in EPA Method 5 and the Ontario-Hydro mercury speciation draft method. Data were recorded on standard forms, which are included in Appendix A. The field data were reduced using standard "in-house" spreadsheets. Copies of the summary sheets are included in Appendix A. To assure consistency, all of the Ontario-Hydro train components were prepared and recovered under the supervision of a senior technician experienced in the Ontario-Hydro mercury speciation lab techniques. Copies of the recovery sheets are included in Appendix C.

The Ontario-Hydro sampling train analysis consisted of eight sub-samples. Each sub-sample analysis consisted of developing a calibration curve (absorbance versus mercury concentration in solution), checks of field and lab blanks, calibration checks against SRM and lab standards, selected duplicates and selected sample spikes. The laboratory summaries for each of these runs are contained in Appendix C.

A total of 207 individual Ontario-Hydro mercury determinations were completed, including 9 blank samples, 54 NIST SRM or lab QC checks, sample spikes, and duplicate analyses.

I. Blank Samples

A total of 9 blank liquid samples were analyzed. All of the blanks were below the detection limit (<0.2 ng/mL for KCl and $KMnO_4$ blanks and <1.0 ng/mL for all others). Consequently, in this report, blank concentrations were not subtracted from any mercury determination.

II. NIST Standard Reference Material Checks

Fifty-four NIST SRM checks were conducted throughout the mercury determinations. Two standards were used in the determinations as detailed in Table 27.

Table 27. NIST SRM analyses

NIST SRM	Standard Value (ng/mL)	Sample Fraction	Samples Analyzed	Average Result (ng/mL)	Percent of Standard	Standard Deviation (ng/mL)	Percent Relative Standard Deviation
1641d	8.0	Ontario Hydro Liquids	50	8.27	103.4	0.14	1.7
		Ontario Hydro Filters	3	8.37	104.6	0.06	0.7
1633B	141.0	Ontario Hydro Filters	1	138	97.9	NA	NA

III. Spike Sample Recoveries

A total of 21 samples were spiked with a 2 or 10 μg/L mercury standard and then re-analyzed to determine the percent spike recovery. The result of this QA/QC procedure was an average spike recovery of 82% recovery with a ±22% standard deviation. Four samples were outside the QA/QC criterion of 100% ±20% recovery. The problem was traced to a faulty electronic pipette that was used to spike the samples. These four samples were re-digested, re-spiked using a different pipette and the analyses repeated. All four samples passed the criterion after re-digestion. The results from the re-digested samples were used as the reported values. The average recovery for the 21 samples using the re-digested sample values instead of the original values was 90% recovery with a ±7% standard deviation. Thus the low spike recoveries were an isolated problem and not indicative of a larger QA/QC problem.

IV. Duplicate Analyses

A total of 21 duplicate analyses were conducted periodically throughout the mercury determinations. The result of this QA/QC procedure for 29 of the samples was an average mercury determination that was within 5.3% of the original mercury determination, with a ±11.0% standard deviation. Two pairs of duplicate analyses were outside the QA/QC criterion of ±20% of the average value; the analyses were repeated. One passed the criterion the second time, but the other did not. The sample that did not pass either time was the $KMnO_4$ impinger solution from the sample taken at the FGD inlet during Test 5. The sample analysis results were 11.7 and 7.8 ng/mL (40%) for the initial analyses, and 11.9 and 8.1 ng/mL (33%) for the repeat analyses. The sample was then re-digested and analyzed in duplicate again; the results were 15.3 and 11.0 ng/mL (38%). A value of 13.2 ng/mL (the average of the two re-digested values) was assigned to this sample; the main conclusions in this report would not be changed if the highest or the lowest value was used.

V. Flue Gas Mercury Concentration Detection Limits

For liquid samples, the flue gas mercury concentration was calculated using the following equation:

$$Hg\left[\mu g / m^3\right] = \frac{\left(C_{imp}\ x V_{imp}\right)}{\left(V_{gas}\ x 1000\right)}$$

where: C_{imp} = Mercury concentration of impinger solution [ng/mL (ppb)]
V_{imp} = Liquid volume of impinger solution [mL]
V_{gas} = Flue gas sample volume [dry standard m^3]
1000= Conversion factor [1000 ng per µg]

The flue gas mercury detection limit is reduced when the flue gas sample volume is increased or liquid volume of impinger solution is decreased. The CVAA is calibrated between 0 and 20 ng/mL. Over this range, the calibration curve between absorbance and concentration is linear. The lowest concentration standard used to develop the calibration curve is 0.500 ng/mL. In addition, the detection limit of the liquid CVAA analysis 0.2 ng/mL for KCl and $KMnO_4$ impinger solutions and 1.0 ng/mL for all other liquid samples. The prescribed sampling and recovery procedures result in final liquid volumes varying between 184 and 755 mL. The volume of flue gas collected varied between 0.995 and 2.39 dscm. The sampling variables result in sample-specific flue gas detection limits. The flue gas mercury detection limit for each sample matrix is listed in Table 28. Depending on the matrix, the flue gas mercury detection limit ranged from 0.05 to 0.20 µg/m^3.

Table 28. Flue gas mercury detection limits

Matrix	Maximum Liquid Volume (mL)	Minimum Gas Volume (dscm)	Flue Gas Detection Limit (µg/m^3)
Probe Rinse	184	0.964	0.19
KCl Impinger	755	0.964	0.16
HNO_3/H_2O_2 Impingers	188	0.964	0.20
$KMnO_4$ Impingers	250	0.964	0.05
HCl Rinse	100	0.964	0.10

VI. Mercury Material Balance Closure

To calculate the material balance closure for mercury, the mass flow rate of mercury in each stream entering and leaving the plant has to be calculated. Streams entering the plant are coal, lime slurry, FGD makeup water, and mist eliminator (ME) wash water. Streams leaving the plant are bottom ash, ESP hopper ash, FGD slurry, and stack gas.

The mass flow rate of mercury in each stream is simply the product of the mass flow rate of each stream times the mercury concentration in that stream.

A. Mercury input from coal

Summarized in Table 29 are the inputs of mercury from coal calculated based on the coal samples collected during the tests. The coal feed rates were provided by the plant. The mercury inputs from coal range from 4.80 to 5.31 mg/sec.

Table 29. Mercury Input from Coal

Test No.	Test #1	Test #2	Test #3	Test #4	Test #5	Test #6
Coal feed rate (kpph), provided by plant	420	412	396	400	413	419
Coal moisture content (wt. %), as received	12.8	12.9	12.5	13.1	13.7	13.5
Coal mercury content (ppm, dry)	0.115	0.106	0.117	0.119	0.111	0.107
Mercury input from the coal (lb/hr)	0.042	0.038	0.040	0.041	0.039	0.039
Mercury input from the coal (mg/sec)	5.31	4.80	5.09	5.19	4.97	4.86

B. Mercury input from limestone slurry

The limestone slurry feed rate into the FGD was calculated based on the amount of SO_2 removed by the FGD. The amount of SO_2 removed by the FGD was calculated from the measured sulfur contents in the feed coal, bottom ash, and ESP ash, and the stack flue gas sulfur dioxide concentration. The limestone utilization was assumed to be 99% (i.e., the Ca/S ratio = 1.01), the design value. By applying the limestone slurry mercury concentrations in the solids and filtrate (Tables 16 and 17) to the calculated limestone slurry feed rate, the total mercury input from the limestone slurry was calculated and the results are summarized in Table 30. The mercury input from the limestone slurry ranged from 0.19 to 0.65 mg/sec

Table 30. Mercury Input from Limestone Slurry

Test No.	Test #1	Test #2	Test #3	Test #4	Test #5	Test #6
Coal feed rate (kpph)	420	412	396	400	413	419
Coal moisture content (%, as det'd)	12.8	12.9	12.5	13.1	13.7	13.5
Coal sulfur content (wt%, dry)	3.6	3.5	3.7	3.6	3.6	3.6
FGD sulfur input from coal (kpph)	12.5	12.4	13.8	13.5	13.9	14.2
Ca/S ratio	1.01					
Limestone slurry solids mass flow rate (kpph)	38.5	37.2	41.2	40.5	42.0	43.3
Hg in limestone slurry solids (ppm)	0.031	0.048	0.038	0.035	0.038	0.038
Hg input from limestone slurry solids (lb/hr)	0.0012	0.0018	0.0016	0.0014	0.0016	0.0016
Limestone slurry liquid mass flow rate (kpph)	117	108	120	111	158	129
Hg in limestone slurry liquid (ng/mL)	2.8	3.2	3.1	33.6	13.3	10.6
Hg input from limestone slurry liquid (lb/hr)	0.0003	0.0003	0.0004	0.0037	0.0021	0.0014
Limestone slurry required (kpph)	155	145	161	151	200	172
Hg input from limestone slurry (lb/hr)	0.0015	0.0021	0.0019	0.0051	0.0037	0.0030
Hg input from limestone slurry (mg/sec)	0.19	0.27	0.24	0.65	0.47	0.38

C. Mercury input from FGD makeup water

FGD makeup water comes from the thickener overflow. To calculate the mass flow rate of the makeup water, it is necessary to perform a water balance around the FGD. Water enters the FGD in the flue gas (due to the moisture and hydrogen content of the coal), limestone slurry, FGD makeup, and ME wash water. Water leaves the FGD via FGD slurry blowdown and the stack flue gas.

The mass (and volumetric) flow rate of water in the flue gas from coal was calculated based on the coal-firing rate provided by plant personnel and the coal properties (Table 13). The flow rate of water from limestone slurry was calculated based on the limestone feed rate and the limestone slurry properties (Tables 16-17). The flow rate of ME wash water was assumed to be the design rate of 1 gpm/MW. The sum of the volumetric flow rates of these streams and the FGD makeup water is the water input to the FGD.

The water loss via the moisture-saturated flue gas leaving the stack was calculated based on the flue gas moisture content measured as part of the Ontario-Hydro method. The flow rate of FGD slurry was calculated based on the amount of SO_2 removed in the FGD and the slurry properties. The sum of the flow rates of these two streams is the water output from the FGD.

The FGD makeup water flow rate is the difference between the water output and the sum of the flow rates from flue gas, limestone slurry, and ME wash water. The results of analyses of the makeup water samples were summarized previously in Tables 24-25. Summarized in Table 31 are the mass flow rate and the mercury inputs from the FGD makeup water entering the FGD.

Table 31. Mercury Input from FGD Makeup Water

Test No.	Test #1	Test #2	Test #3	Test #4	Test #5	Test #6
FGD makeup solids mass flow rate (kpph)	23.4	23.8	8.83	17.9	11.0	7.56
Hg in FGD makeup solids (ppm)	0.63	0.59	0.57	0.54	0.56	0.55
Hg input from FGD makeup solids (Ib/hr)	0.014	0.013	0.005	0.009	0.006	0.004
FGD makeup liquid mass flow rate (kpph)	239	273	230	209	156	72
Hg in FGD makeup liquid (ng/mL)	2.3	< 1.0	1.0	1.2	1.4	2.3
Hg input from FGD makeup liquid (Ib/hr)	6.0×10^{-4}	1.5×10^{-4}	2.4×10^{-4}	2.7×10^{-4}	2.3×10^{-4}	1.8×10^{-4}
FGD makeup stream mass flow rate (kpph)	262	297	239	227	167	80
Hg input from FGD makeup stream (Ib/hr)	0.015	0.013	0.005	0.009	0.006	0.004
Hg input from FGD makeup stream (mg/sec)	1.89	1.70	0.66	1.19	0.78	0.51

D. Mercury output via bottom ash

The rate of bottom ash leaving the plant was calculated based on the information provided by a plant engineer that 10 percent of the coal ash ended up as bottom ash. The results of analyses of the bottom ash samples collected each test day were previously summarized in Tables 14-15. Since the concentration of the mercury found in the bottom ash samples was below the detection limit of 0.004 ppb, one half of the value of the detection limit was used to calculate the mass flow rate of mercury. Summarized in Table 32 are the outputs of mercury calculated based on the four bottom ash samples collected during the four tests conducted. The mercury outputs via the bottom ash range was less than 0.002 mg/sec.

Table 32. Mercury Output via Bottom Ash

Test No.	Test #1	Test #2	Test #3	Test #4	Test #5	Test #6
Bottom ash mass flow rate (kpph)	4.33	4.22	5.53	5.56	5.36	5.36
Hg in bottom ash (ppm)	0.002	0.002	0.002	0.002	0.002	0.002
Hg output via bottom ash (lb/hr)	$8.7x10^{-6}$	$8.4x10^{-6}$	$1.1x10^{-5}$	$1.1x10^{-5}$	$1.1x10^{-5}$	$1.1x10^{-5}$
Hg output via bottom ash (mg/sec)	0.0011	0.0011	0.0014	0.0014	0.0014	0.0013

E. Mercury output via ESP hopper ash

More than one sample was collected from the ESP ash hoppers. For material balance calculations, the average ESP ash mercury value for each test was employed. The results of analysis of the ESP hopper ash samples were presented earlier in Tables 14 through 17. For material balance calculation purpose, the concentration of mercury in the "combined" ESP ash is calculated as follow.

> 0.9*[average concentration of Hg in samples collected in the first field] + 0.1*[average concentration of Hg in samples collected in the second and third fields]

Summarized in Table 33 are the outputs of mercury in the combined ESP ash samples collected during the tests. The mercury outputs via the ESP hopper ash for the tests range from 0.24 to 0.40 mg/sec.

Table 33. Mercury Output via ESP Hopper Ash

Test No.	Test #1	Test #2	Test #3	Test #4	Test #5	Test #6
ESP hopper ash mass flow rate (kpph)	36.6	35.1	38.3	38.5	40.9	40.8
Hg in ESP hopper ash (ppm)	0.069	0.061	0.05	0.052	0.074	0.078
Hg output via ESP hopper ash (lb/hr)	$2.5x10^{-3}$	$2.1x10^{-3}$	$1.9x10^{-3}$	$2.0x10^{-3}$	$3.0x10^{-3}$	$3.2x10^{-3}$
Hg output via ESP hopper ash (mg/sec)	0.32	0.27	0.24	0.25	0.38	0.40

F. Mercury output via FGD Slurry

Each FGD slurry sample was filtered to generate a separate solids and filtrate samples, which were analyzed separately. The results of analyses of the solids and filtrate samples were previously reported in Tables 22 and 23, respectively.

The mass flow rate of the FGD slurry was calculated based on the amount of SO_2 removed in the FGD. The amount of SO_2 removed in the FGD was the amount of SO_2 from coal minus the sum of the amounts of SO_2 in the bottom ash and ESP ash. The amount of limestone stoichiometrically required to neutralize the dissolved SO_2 in the scrubbing liquor was calculated based on the amount of SO_2 removed in FGD. Using the design limestone utilization rate of 99% (i.e., Ca/S ratio = 1.01), the actual limestone feed rate was calculated. Using CaO as a tracer element and the FGD slurry properties, the mass flow rates of the slurry leaving the FGD and the mercury output via the FGD slurry were calculated. The results are summarized in Table 34. The mercury output via FGD slurry ranged from 4.22 to 5.08 mg/sec.

Table 34. Mercury Output via FGD Slurry

Test No.	Test #1	Test #2	Test #3	Test #4	Test #5	Test #6
FGD slurry mass flow rate (kpph)	236	272	215	220	226	206
FGD slurry solids mass flow rate (kpph)	71.7	68.5	65.5	69.7	69.1	67.2
Hg in FGD slurry solids (ppm, dry)	0.55	0.51	0.51	0.58	0.55	0.52
Hg outpur via FGD slurry solids (Ib/hr)	$4.0x10^{-2}$	$3.5x10^{-2}$	$3.3x10^{-2}$	$4.0x10^{-2}$	$3.8x10^{-2}$	$3.5x10^{-2}$
FGD slurry liquid mass flow rate (kpph)	164	203	149	150	157	139
Hg in FGD slurry liquid (ng/mL)	1.1	2.6	1.8	1.8	2.2	4.1
Hg outpur via FGD slurry liquid (Ib/hr)	$1.8x10^{-4}$	$5.3x10^{-4}$	$2.7x10^{-4}$	$2.7x10^{-4}$	$3.5x10^{-4}$	$5.7x10^{-4}$
Hg output via FGD slurry stream (Ib/hr)	$4.0x10^{-2}$	$3.5x10^{-2}$	$3.4x10^{-2}$	$4.0x10^{-2}$	$3.8x10^{-2}$	$3.5x10^{-2}$
Hg output via FGD slurry stream (mg/sec)	5.03	4.46	4.22	5.08	4.82	4.43

G. Mercury output via stack flue gas

The amount of Hg in the stack flue gas was calculated based on the Ontario-Hydro data and are summarized in Table 35. The Hg output via the stack flue gas was 1.19 to 2.12 mg/sec.

Table 35. Mercury Output via Stack Flue Gas

Test No.	Test #1	Test #2	Test #3	Test #4	Test #5	Test #6
Stack flue gas flow rate (dry, std m^3/min)	37,610	36,770	36,690	36,950	36,230	33,670
Hg concentration in flue gas ($\mu g/m^3$)	3.38	2.44	2.64	2.46	1.97	3.16
Hg output via stack flue gas (lb/hr)	0.017	0.012	0.013	0.012	0.009	0.014
Hg output via stack flue gas (mg/sec)	2.12	1.50	1.61	1.51	1.19	1.77

H. Material Balance Closure for Mercury

The mercury material balance closure is defined as the total mercury output from the plant divided by the total mercury input (expressed as %). The total mercury input is the sum of the amounts of mercury in the coal, limestone slurry, FGD makeup water and mist eliminator water entering the plant. The total mercury output is the sum of the amounts of mercury leaving the plant via bottom ash, ESP hopper ash, FGD slurry blowdown, and stack flue gas.

Table 36 summarizes the mercury material balance closures for the six tests conducted at the plant. The calculated material balance closures for mercury ranged from 92% to 115%, which are within our QA/QC criterion of 70-130% for a single test. The average value is 101%, which is within our QA/QC criterion of 80-120% for multiple tests.

Table 36. Summary of material balance closure for mercury.

Test No.	Test #1	Test #2	Test #3	Test #4	Test #5	Test #6
Hg input from Coal Fired (mg/sec)	5.31	4.80	5.09	5.20	4.97	4.87
Hg input from limestone slurry solids (mg/sec)	0.15	0.23	0.20	0.18	0.20	0.21
Hg input from limestone slurry filtrate (mg/sec)	0.04	0.04	0.05	0.47	0.26	0.17
Hg input from FGD make-up solids (mg/sec)	1.82	1.68	0.63	1.16	0.75	0.49
Hg input from FGD make-up liquid (mg/sec)	0.08	0.02	0.03	0.03	0.03	0.02
Hg input from ME wash water (mg/sec)	0.02	0.02	0.02	0.02	0.02	0.02
Total Hg input (mg/sec)	7.42	6.78	6.02	7.06	6.23	5.78
Hg output via Bottom Ash (mg/sec)	0.001	0.001	0.001	0.001	0.001	0.001
Hg output via ESP Hopper Ash (mg/sec)	0.32	0.27	0.24	0.25	0.38	0.40
Hg output via FGD Slurry Solids (mg/sec)	5.01	4.40	4.19	5.06	4.78	4.36
Hg output via FGD Slurry Filtrate (mg/sec)	0.02	0.07	0.03	0.03	0.04	0.07
Hg output via stack flue gas (mg/sec)	2.12	1.50	1.61	1.51	1.19	1.78
Total Hg output (mg/sec)	7.47	6.23	6.08	6.86	6.41	6.61
Hg material balance closure (output / input)	101%	92%	101%	97%	103%	115%
Average Hg material balance closure	101 ± 8 (%)					

VII. Heat input-based mercury emission

The heat input based mercury emission rates were calculated by using the Ontario-Hydro data and the heat input to the boiler, and the results are summarized in Table 37. The mercury emissions ranged from 2.07 to 3.54 Ib/TBtu.

Table 37. Heat input-based mercury emission

Test No.	Test #1	Test #2	Test #3	Test #4	Test #5	Test #6
Coal feed rate (kpph)	420	412	396	400	413	419
Coal moistute content(wt. %), as received	12.8	12.9	12.5	13.1	13.7	13.5
Coal Heating Value (Btu/Ib)	12,950	12,950	12,840	12,860	12,820	12,840
Boiler heat input (mm Btu/hr)	4,746	4,650	4,453	4,472	4,572	4,653
Stack Hg emission rate (Ib/hr)	0.017	0.012	0.013	0.012	0.009	0.014
Stack Hg emission rate (Ib/T Btu)	3.54	2.55	2.88	2.69	2.07	3.02
Average Hg emission rate (Ib/T Btu)	3.05 ± 0.70		2.79 ± 0.13		2.55 ± 0.67	

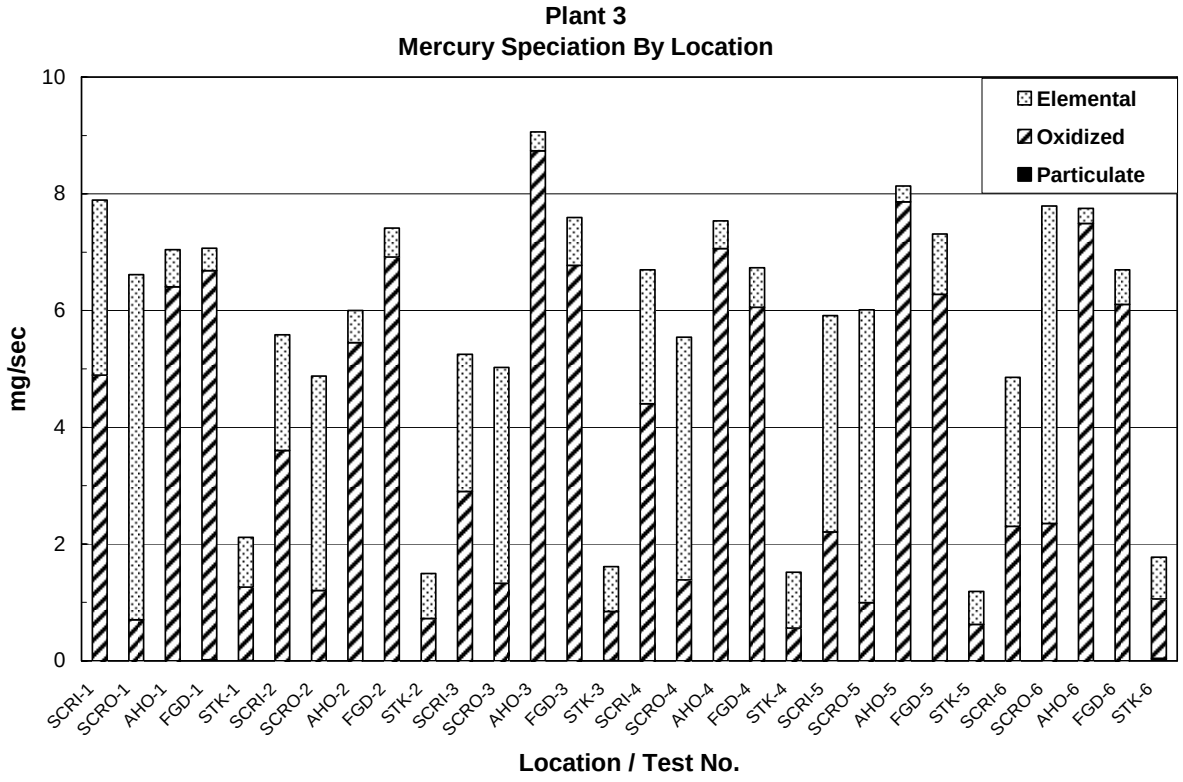

Figure 1. Mercury speciation by location.

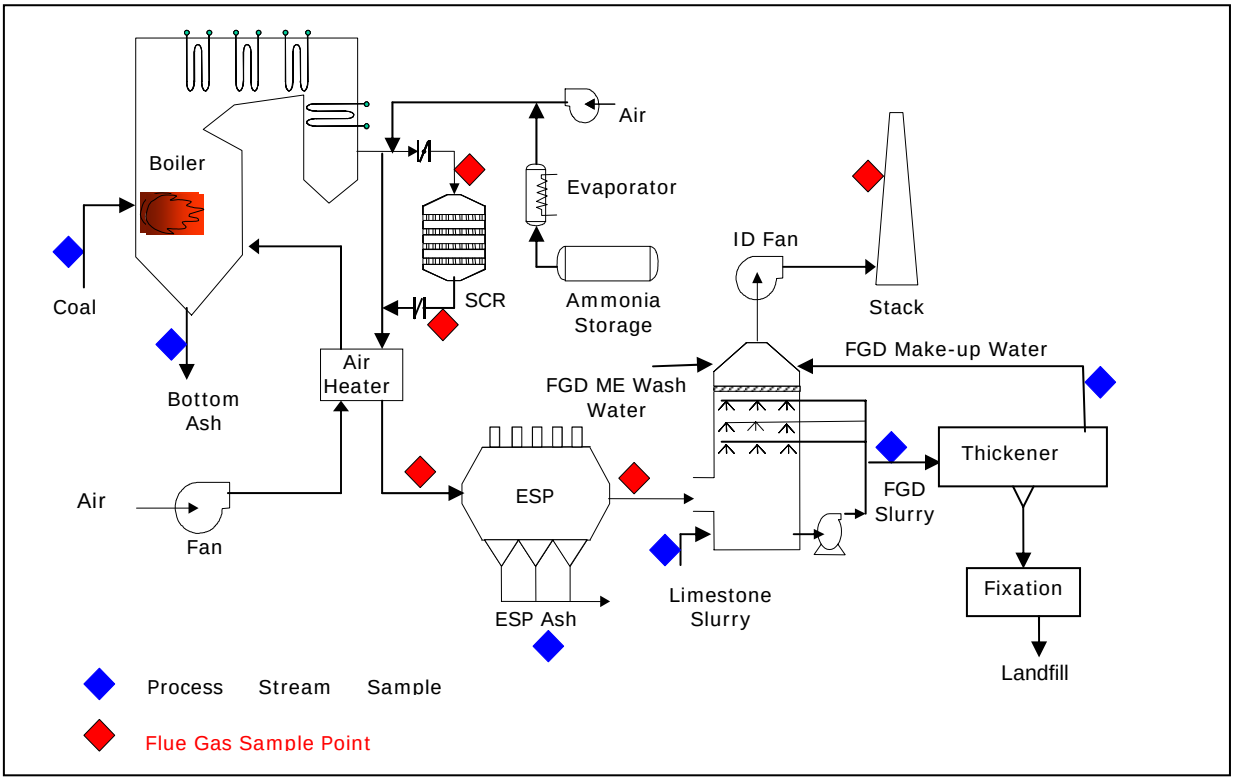

Figure 2. Process flow schematic and sampling locations

Figure 3. SCR inlet probe and sampling train

Figure 4. SCR outlet probe and sampling train

Figure 5. ESP inlet (air heater outlet) probe and sampling train

Figure 6. FGD inlet probe

Figure 7. Stack sampling location, showing probe ready for insertion

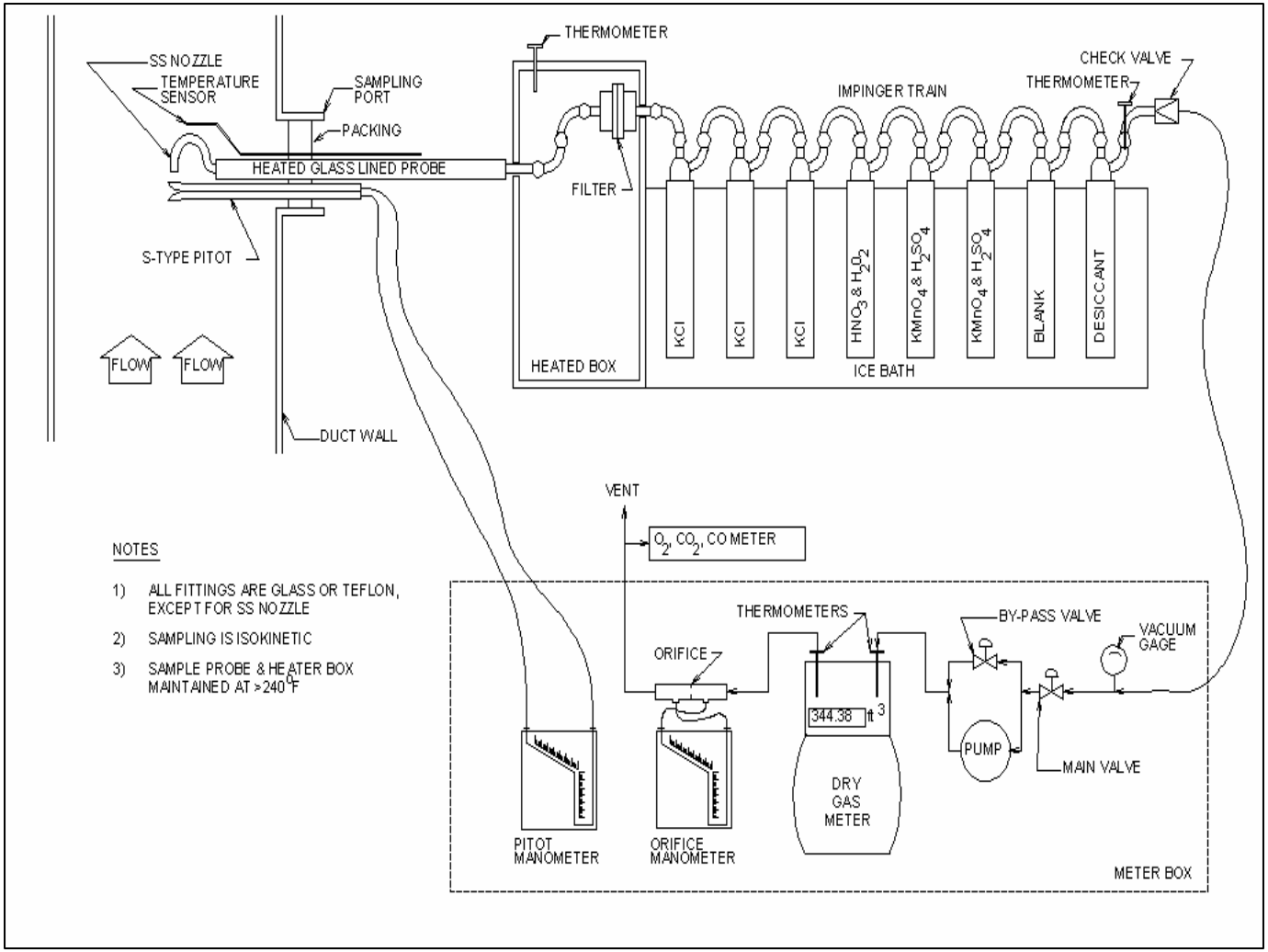

Figure 8. Ontario-Hydro sampling train schematic

Figure 9. ESP ash hoppers, showing pipes used for transferring ash to the silo

APPENDIX A

Mercury Sampling Data

- Field Data Sheets
- Mercury Measurement Data Sheets

APPENDIX B

Plant Process Data

APPENDIX C

Flue Gas Mercury Data

- Summary of Ontario-Hydro Impinger Analyses Data Sheets
- Recovery Data Sheets

APPENDIX D

Process Material Data

- Coal Analysis Data Sheets
- Bottom Ash Analysis Data Sheets
- Limestone Slurry Solids Analysis Data Sheets
- Limestone Slurry Filtrate Analysis Data Sheets
- Ash Analysis Data Sheets
- FGD Slurry Solids Analysis Data Sheets
- FGD Slurry Filtrate Data Sheets
- FGD Makeup Water Analysis Data Sheets

APPENDIX A

Mercury Sampling Data

- Field Data Sheets
- Mercury Measurement Data Sheets

ONTARIO HYDRO Hg SAMPLING AND SPECIATION FIELD DATA SHEET

TEST ID	SCRI-1
PLANT	Plant 3
LOCATION	Unit 2 SCR Inlet
DATE	6-7-05
OPERATOR(S)	
AMBIENT TEMP [°F]	
BAR. PRESS. [" Hg]	

METER BOX	N-3
PITOT TUBE DESC	E-3
PROBE LENGTH [ft]	12
NOZZLE ID [inch]	7/32 A 0.214
%H_2O (Assumed)	8
FILTER ID	1.2
K FACTOR	1.00

CAL. DATA: delta H	1.932
Y	1.026
C(p)	0.84
FILTER BOX SETTING	NA
PROBE HTR SETTING	325
DUCT X-SECTION	circ ? rect ? other:
DUCT DIMENSIONS	9'4"x78' DUCT AREA

Comments: 1320 Stop filter change
1357 restart

TRAVERSE POINT [port-inch]	CLOCK TIME (24-hr)	SAMPLE TIME [minute]	STATIC PRES [" H_2O]	PITOT HEAD [" H_2O]	METER DIFF PRESSURE [" H_2O]	METER VACUUM [" Hg]	METER READING [ft^3]	METER TEMP [oF] inlet	METER TEMP [oF] outlet	STACK TEMP [°F]	PROBE TEMP [°F]	FILTER BOX [°F]	LAST IMP TEMP [°F]	METER EXHAUST O_2 [% vol]	METER EXHAUST CO_2 [% vol]
	1220	0					141.807								
A-B-1	1230	10	-7.15	0.55	0.55	5.0	145.740	108	107	726	325	NA	60	3.7	16.3
A-B-1	1240	20		0.55	0.55	6.0	149.567	108	108	726	326		63	4.3	15.9
A-B-1	1250	30		0.55	0.55	7.5	153.342	108	107	725	323		65	4.8	15.3
A-B-1	1300	40	-7.35	0.55	0.55	9.0	157.18	111	109	726	325		66	3.8	16.2
A-B-2	1310	50		0.55	0.55	10.0	160.95	110	108	730	327		61	3.9	16.2
A-B-2	1320	60	-7.25	0.55	0.55	13.0	~~164.65~~ 165.40	110	107	732	315		61		
A-B-2	1347	70		0.55	0.55	5.0	169.283	114	110	715	327		66	3.9	16.1
A-B-2	1357	80	-7.30	0.55	0.55	6.0	173.110	114	112	733	323		66	3.6	16.4
A-B-3	1407	90		~~0.55~~ 0.40	~~0.55~~ 0.40	6.5	176.6	115	112	732	332		64	4.1	16.0
A-B-3	1417	100	-7.38	0.40	0.40	6.0	180.000	114	112	740	327		65	4.4	15.7
A-B-3	1427	110		0.40	0.40	6.0	183.310	114	112	739	324		66	4.3	15.8
A-B-3	1437	120	-7.36	0.40	0.40	7.0	186.690	107	108	736	301		61	4.7	15.4
				Rus											
			-7.30	0.497	0.50		44.137	110.2		729.2				4.1	15.9

Sample Train Leak Checks: Pre Test 0.015 ft^3 @ 11.0 in. Hg; Post Test 0.000 ft^3 @ 7.5 in. Hg

Pitot Tube Leak Checks: PreTest OK @ 8 in. H_2O; Post Test OK @ 8 in. H_2O

NOTE: Purge for 10 minutes at end of sampling.

CONSOLENERGY

0

101.3

ONTARIO HYDRO Hg SAMPLING AND SPECIATION FIELD DATA SHEET

TEST ID	SCRO-1
PLANT	Plant 3
LOCATION	Unit 2 SCR Outlet
DATE	6-7-05
OPERATOR(S)	RLO & BPS
AMBIENT TEMP [°F]	~92°
BAR. PRESS. [" Hg]	29.37

METER BOX	N-1
PITOT TUBE DESC	E-15
PROBE LENGTH [ft]	10
NOZZLE ID [inch]	3/16E=0.183
%H_2O (Assumed)	8
FILTER ID	7 & 8
K FACTOR	0.594

CAL. DATA: delta H	1.976	Comments:	
Y	0.987		
C(p)	0.838		
FILTER BOX SETTING	NA		
PROBE HTR SETTING	325		
DUCT X-SECTION	circ ?	rect ?	other:
DUCT DIMENSIONS	11' x 32'	DUCT AREA	

TRAVERSE POINT [port-inch]	CLOCK TIME (24-hr)	SAMPLE TIME [minute]	STATIC PRES [" H_2O]	PITOT HEAD [" H_2O]	METER DIFF PRESSURE [" H_2O]	METER VACUUM [" Hg]	METER READING [ft^3]	METER TEMP [oF] inlet	METER TEMP [oF] outlet	STACK TEMP [°F]	PROBE TEMP [°F]	FILTER BOX [°F]	LAST IMP TEMP [°F]	METER EXHAUST O_2 [% vol]	METER EXHAUST CO_2 [% vol]
	1220	0					309.36								
		10	-11.1	1.30	.78	5	314.27	104	100	713	327	—	64	~~4.2~~	—
		20	—	1.30	.78	7	319.18	107	101	714	328		57	3.7	
		30	-10.8	1.30	.78	9	324.09	109	102	714	329		62	4.2	
		40	—	1.30	.78	11.5	329.00	109	103	714	328		61	3.9	
STOP	1312	50	-10.6	1.30	.78	14	333.76	109	103	713	327		59	3.9	
START	1336	60					333.90								
		6~~0~~	-10.9	1.30	0.78	4	338.87	107	104	713	327		60	3.7	
		1~~0~~	—	1.30	0.78	6	343.71	112	106	715	329		58	3.5	
		8~~0~~	-10.6	1.30	0.78	8	348.53	114	106	716	328		60	—	
		9~~0~~	~~-10.6~~	1.30	0.78	10	353.47	114	107	715	327		61	3.7	
STOP	1~~2~~26	100	-10.7	1.30	.78	14	358.39	114	108	715	327		62	3.8	
		120													
		100	-10.8	1.30	0.78		48.89	106.95	714.2					3.79	

Sample Train Leak Checks: Pre Test OK ft^3 @ 10 in. Hg; Post Test OK ft^3 @ 10 in. Hg

~~Pitot Tube~~ Leak Checks: PreTest OK @ 7 in. H_2O; Post Test OK @ 7 in. H_2O

CONSOLENERGY

NOTE: Purge for 10 minutes at end of sampling.

11013

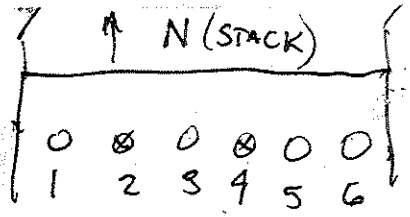

PORT DEPTH = 20 1/2"

ONTARIO HYDRO Hg SAMPLING AND SPECIATION FIELD DATA SHEET

TEST ID	1	METER BOX	N-4	CAL. DATA: delta H	1.883	Comments:	
PLANT	Plant 3	PITOT TUBE DESC	E-5	Y	0.960		
LOCATION	Unit 2 Air Heater Outlet	PROBE LENGTH [ft]	10'	C(p)	0.832		
DATE	6/7/05	NOZZLE ID [inch]	5/32 0.153	FILTER BOX SETTING	NA		
OPERATOR(S)	GLC/ST	%H_2O (Assumed)	> 8	PROBE HTR SETTING	325		
AMBIENT TEMP [°F]	89	FILTER ID	13	DUCT X-SECTION	circ ?	rect ?	other:
BAR. PRESS. [" Hg]	29.37	K FACTOR	0.406	DUCT DIMENSIONS	16' x 12'	DUCT AREA	

TRAVERSE POINT [port-inch]	CLOCK TIME (24-hr)	SAMPLE TIME [minute]	STATIC PRES [" H_2O]	PITOT HEAD [" H_2O]	METER DIFF PRESSURE [" H_2O]	METER VACUUM [" Hg]	METER READING [ft^3]	METER TEMP (6) [oF] inlet	METER TEMP (7) [oF] outlet	STACK TEMP [°F] (1)	PROBE TEMP [°F] (2)	FILTER BOX [°F]	LAST IMP TEMP [°F] (4)	METER EXHAUST O_2 [% vol]	METER EXHAUST CO_2 [% vol]
	1220	0					655.0								
2'	P	10		1.30	0.52	4.0	659.19	104	100	366	323		61	6.8	13.4
2'	O	20		1.30	0.52	5.0	663.35	107	101	366	321		52	7.0	13.2
5'	R	30		1.30	0.52	5.0	667.49	109	102	368	320		52	5.8	14.3
5'	T	40	-16.42	1.30	0.52	6.0	671.67	111	103	367	318		53	6.3	13.9
8'	#2	50	-9.61	1.25	0.50	6.5	675.74	113	105	366	325		53	6.0	14.1
8'	1320	60	-12.96	2.20	0.84	10.0	680.57	114	107	368	321		53	6.1	14.0
					LEAK	CHECK	OK	—	0 @	10" Hg	—				
	1329						680.90								
2'		70		1.0	0.40	4.0	684.77	110	107	352	321		58	6.6	13.6
2'	STOP 1344	~~80~~ 75					687.37								
2'	1414	~~90~~ 80		1.4	0.56	4.0	687.40 / 689.60	112	109	351	140		57	7.2	13.0
5'		~~100~~ 90		1.1	0.44	4.5	693.59	111	109	352	122		55	6.8	13.4
5'		~~110~~ 100		1.10	0.44	5.0	697.43	111	109	352	115		56	6.9	13.3
8'		~~120~~ 110		0.84	0.34	5.0	701.__	109	108	344	118		57	6.7	13.5
8'		120		0.84	0.34	5.5	704.40	108	107	345	129		57	7.1	13.1
			-13.0	1.224	0.495		46.87	107.8		358.1				6.6	13.6

Sample Train Leak Checks: Pre Test <0.002 ft^3 @ 10 in. Hg; Post Test 0 ft^3 @ 10 in. Hg

Pitot Tube Leak Checks: PreTest 0 @ 5 in. H_2O; Post Test ____ @ ____ in. H_2O

CONSOL ENERGY

NOTE: Purge for 10 minutes at end of sampling.

13.0

STOPPED TEST @ 1344 – TO INSPECT PITOT LINES / REPLACED POS SIDE W TEMP. TUBE. LEAK CHECKED AGAIN. RESTARTED @ 1414.

1415 – PROBE HEATER NOT WORKING – ?? – NO POWER to heater.

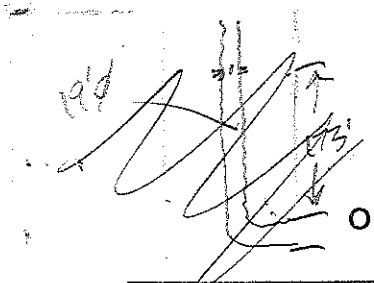

ONTARIO HYDRO Hg SAMPLING AND SPECIATION FIELD DATA SHEET

TEST ID	OUE	METER BOX	N-2	CAL. DATA: delta H	2.012
PLANT	Plant 3	PITOT TUBE DESC	E-2	Y	0.966
LOCATION	Unit 2 FGD Inlet	PROBE LENGTH [ft]	10	C(p)	0.837
DATE	6/7/05	NOZZLE ID [inch]	5/16E-0.309	FILTER BOX SETTING	NA
OPERATOR(S)	JAW	%H_2O (Assumed)	8	PROBE HTR SETTING	325
AMBIENT TEMP [°F]	95	FILTER ID	1	DUCT X-SECTION	circ ? / rect ? / other:
BAR. PRESS. [" Hg]	29.37	K FACTOR	~~6.75~~ 7.00	DUCT DIMENSIONS	22' x 28'6" DUCT AREA

Comments:

TRAVERSE POINT [port-inch]	CLOCK TIME (24-hr)	SAMPLE TIME [minute]	STATIC PRES [" H_2O]	PITOT HEAD [" H_2O]	METER DIFF PRESSURE [" H_2O]	METER VACUUM [" Hg]	METER READING [ft^3]	METER TEMP [oF] inlet	METER TEMP [oF] outlet	STACK TEMP [°F]	PROBE TEMP [°F]	FILTER BOX [°F]	LAST IMP TEMP [°F]	METER EXHAUST O_2 [% vol]	METER EXHAUST CO_2 [% vol]	O_2 cal check
	12:20	0					709.40									
#4 10'	12:30	10	8.45	0.27	1.90	5.0	717.02	97	96	355	327		48	6.5	13.6	
	12:40	20	8.73	0.28	1.95	5.5	724.68	101	98	354	316		50	7.5	12.7	
	12:50	30	8.52	0.29	2.05	6.0	732.62	103	98	355	318		52	6.7	13.5	21.1 recal
	13:00	40	8.57	0.28	1.95	6.0	740.38	104	100	354	317		54	7.2	13.0	
	13:10	50	8.54	0.28	1.95	6.0	748.13	106	101	356	317		53	6.3	13.8	
	13:20	60	8.58	0.27	1.90	6.0	755.80	106	102	355	316		54	6.9	13.2	20.9 OK
	13:30	70	8.61	0.26	1.80	6.0	763.36	106	102	355	317		57	6.4	13.8	
	13:40	80	8.53	0.26	1.80	6.0	770.78	107	103	355	317		56	6.4	13.8	
	13:50	90	8.70	0.26	1.80	6.0	778.31	106	103	354	323		56	7.3	12.8	21.1 recal
	14:00	100	8.59	0.28	1.95	6.5	786.12	107	103	355	328		58	6.2	13.9	
	14:10	110	8.52	0.28	1.95	7.0	794.00	107	104	354	326		58	7.1	13.1	
	14:20	120	8.59	0.25	1.75	7.0	801.38	107	104	356	326		59	6.9	13.3	20.9 OK
				RMS												
			8.578	0.272	1.896		91.98		103.0	354.8				6.78	13.38	

Sample Train Leak Checks: Pre Test dead stop ft^3 @ 12 in. Hg; Post Test dead stop ft^3 @ 10 in. Hg

Pitot Tube Leak Checks: PreTest OK @ 7" in. H_2O; Post Test OK @ 6" in. H_2O

CONSOLENERGY

Post test air purge for 10 min @ ΔH = 1.0

NOTE: Purge for 10 minutes at end of sampling.

E76.1

19'6" 11'3"

591.605

ONTARIO HYDRO Hg SAMPLING AND SPECIATION FIELD DATA SHEET

TEST ID	#1	METER BOX	N-5	CAL. DATA: delta H	2.015
PLANT	Plant 3	PITOT TUBE DESC	E-1	Y	1.011
LOCATION	Unit 2 Stack	PROBE LENGTH [ft]	6	C(p)	0.833
DATE	6/7/05	NOZZLE ID [inch]	5/32 A=0.150	FILTER BOX SETTING	250
OPERATOR(S)	KC/LR	%H_2O (Assumed)	13.5	PROBE HTR SETTING	250
AMBIENT TEMP [°F]	~~84~~ 93	FILTER ID		DUCT X-SECTION	circ ? / rect ? / other:
BAR. PRESS. [" Hg]	29.37	K FACTOR	0.517	DUCT DIMENSIONS	19 ft — DUCT AREA

Comments: TRAVERSED B PORT only

TRAVERSE POINT [port-inch]	CLOCK TIME (24-hr)	SAMPLE TIME [minute]	STATIC PRES [" H_2O]	PITOT HEAD [" H_2O]	METER DIFF PRESSURE [" H_2O]	METER VACUUM [" Hg]	METER READING [ft³]	METER TEMP [oF] (6) inlet	(7) outlet	STACK TEMP [°F] (1)	PROBE TEMP [°F] (2)	FILTER BOX [°F] (3)	LAST IMP TEMP [°F] (4)	METER EXHAUST O_2 [% vol]	CO_2 [% vol]
	12:20	0					~~591.07~~								
	12:30	10		3.0	1.52	-5.0	599.13	96	96	136	248	324	50	6.9	10.4
	12:40	20		3.0	1.52	-5.0	605.68	98	97	137	252	324	54	6.8	10.4
	12:50	30		3.2	1.60	-5.0	612.27	101	98	137	247	325	53	6.7	10.6
Start	13:00			3.2	1.60	-5.0	618.82	102	98	137	249	325	49	7.4	10.1
1.30	13:10	40		3.3	1.70	-5.5	625.48	104	98	137	247	325	48	6.5	10.7
	13:20	50		3.3	1.70	-6.0	632.27	105	98	137	249	326	49	6.9	10.4
1.35	13:30	60		3.3	1.70	-6.0	639.07	105	98	136	248	326	52	6.6	10.7
	13:40			3.3	1.70	-6.0	645.89	106	99	137	248	326	55	7.6	10.0
1.30	13:50	70		3.2	1.60	-6.0	652.68	106	98	136	248	327	54	6.9	10.5
	14:00	80		3.20	1.60	-6.0	659.47	107	98	136	247	326	55	6.4	10.8
1.25	14:10	90	3.0 ←	~~3.24~~	1.52	-6.0	666.14	107	98	136	246	325	55	6.7	10.6
1.20	14:20			3.0	1.52	-6.0	672.70	107	98	136	246	325	58	7.1	10.3
		100													
		110		RMS											
		120		3.165											
1.30				3.17	1.607		81.10	100.8		136.5				6.88	

Sample Train Leak Checks: Pre Test <0.01 ft³ @ 7 in. Hg; Post Test <0.01 ft³ @ 7 in. Hg

Pitot Tube Leak Checks: PreTest <0.01 @ 5 in. H_2O; Post Test <0.01 @ 5 in. H_2O

CONSOL ENERGY

NOTE: Purge for 10 minutes at end of sampling.

308.4

ONTARIO HYDRO Hg SAMPLING AND SPECIATION FIELD DATA SHEET

TEST ID	SCRI-2
PLANT	Plant 3
LOCATION	Unit 2 SCR Inlet
DATE	6-7-05
OPERATOR(S)	JL
AMBIENT TEMP [°F]	97
BAR. PRESS. [" Hg]	29.29

METER BOX	D-3
PITOT TUBE DESC	
PROBE LENGTH [ft]	12
NOZZLE ID [inch]	
%H_2O (Assumed)	8
FILTER ID	3.4
K FACTOR	1.00

CAL. DATA: delta H	1.82
Y	1.026
C(p)	
FILTER BOX SETTING	NA
PROBE HTR SETTING	325
DUCT X-SECTION	circ ? rect ? other:
DUCT DIMENSIONS	9'4"x78' DUCT AREA

Comments: 1305 Stop - filter change
1315 restart

TRAVERSE POINT [port-inch]	CLOCK TIME (24-hr)	SAMPLE TIME [minute]	STATIC PRES [" H_2O]	PITOT HEAD [" H_2O]	METER DIFF PRESSURE [" H_2O]	METER VACUUM [" Hg]	METER READING [ft^3]	METER TEMP [oF] inlet	METER TEMP [oF] outlet	STACK TEMP [°F]	PROBE TEMP [°F]	FILTER BOX [°F]	LAST IMP TEMP [°F]	METER EXHAUST O_2 [% vol]	METER EXHAUST CO_2 [% vol]
	17:05	0					192.900								
	17:15	10		0.55	0.55	5.0	196.79	108	110	703	320	NA	68		
	17:25	20	-7.2	0.55	0.55	6.0	200.433	108	110	710	334		68	4.4	15.7
	17:35	30		0.55	0.55	6.5	204.200	108	110	711	327		62		
	17:45	40	-7.25	0.55	0.55	8.0	207.97	108	108	711	320		68	4.4	15.7
	17:55	50		0.55	0.55	10.0	211.735	107	107	743	328		67		
	18:05	60	-7.82	0.55	0.55	11.5	215.382 ~~215.968~~	106	107	744	330		65	3.9	16.1
	18:25	70		0.55	0.55	4.5	219.812	104	105	731	333		68		
	18:35	80	-8.30	0.55	0.55	5.5	223.625	102	104	742	332		62	4.2	15.9
	18:45	90		0.40	0.40	5.5	226.980	103	104	750	325		60		
	18:55	100	-7.99	0.40	0.40	6.0	230.255	100	101	748	322		60	4.3	15.8
	19:05	110		0.40	0.40	7.0	233.560	100	101	748	330		61		
	19:15	120	-8.00	0.40	0.40	7.5	236.713	98	99	748	320		60	4.8	15.3
				RMS											
			-7.76	0.497	0.50		43.232	104.9		732.4				4.3	15.8

Sample Train Leak Checks: Pre Test 0.000 ft^3 @ 10" in. Hg; Post Test 0.000 ft^3 @ 7 in. Hg

Pitot Tube Leak Checks: PreTest OK @ 7 in. H_2O; Post Test OK @ 6 in. H_2O

CONSOL ENERGY

NOTE: Purge for 10 minutes at end of sampling.

101.3

ONTARIO HYDRO Hg SAMPLING AND SPECIATION FIELD DATA SHEET

TEST ID	SCRO-2
PLANT	Plant 3
LOCATION	Unit 2 SCR Outlet
DATE	6-7-05
OPERATOR(S)	RLO & BPS
AMBIENT TEMP [°F]	~106°
BAR. PRESS. [" Hg]	29.29

METER BOX	N-1
PITOT TUBE DESC	E-15
PROBE LENGTH [ft]	10
NOZZLE ID [inch]	3/16 E=0.183
%H_2O (Assumed)	8
FILTER ID	9 & 10
K FACTOR	0.594

CAL. DATA: delta H	1.976
Y	0.987
C(p)	0.838
FILTER BOX SETTING	NA
PROBE HTR SETTING	325
DUCT X-SECTION	circ ? rect ? other:
DUCT DIMENSIONS	11' x 32'
DUCT AREA	-

Comments:

TRAVERSE POINT [port-inch]	CLOCK TIME (24-hr)	SAMPLE TIME [minute]	STATIC PRES [" H_2O]	PITOT HEAD [" H_2O]	METER DIFF PRESSURE [" H_2O]	METER VACUUM [" Hg]	METER READING [ft^3]	METER TEMP [oF] inlet	METER TEMP [oF] outlet	STACK TEMP [°F]	PROBE TEMP [°F]	FILTER BOX [°F]	LAST IMP TEMP [°F]	METER EXHAUST O_2 [% vol]	METER EXHAUST CO_2 [% vol]
	1705	0					362.80								
		10	-10.7	1.30	.78	5	367.81	111	110	704	330	—	68	3.9	—
		20	—	1.30	.78	7	372.77	113	110	705	331		63	4.2	
		30	-10.4	1.30	.78	9	377.75	114	110	705	325		63	4.2	
		40	—	1.30	.78	11	382.68	113	110	707	328		64	4.4	
STOP	1755	50	-11.5	1.30	.78	14	387.61	113	109	718	326		63	3.4	
START	1812	60	—	1.30	.78	3.5	388.70 ~~393.12~~	112	109	720	327		65	3.8	
~~LOST FILTER~~		70	-11.6	1.30	.78	4	398.03	114	109	723	325		62	4.2	
		80	—	1.30	.78	4	403.62	113	109	727	326		60	3.9	
STOP	1847	85	-11.2	1.30	.78	4	406.11	112	108	727	327		60	3.9	
		100													
		110													
		120													
		85	-11.1	1.30	0.78		42.22	112.3		715.1				3.99	

Sample Train Leak Checks: Pre Test OK ft^3 @ 10 in. Hg; Post Test OK ft^3 @ 10 in. Hg

Pitot Tube Leak Checks: PreTest OK @ 8 in. H_2O; Post Test OK @ 7 in. H_2O

CONSOLENERGY

NOTE: Purge for 10 minutes at end of sampling.

85.9

ONTARIO HYDRO Hg SAMPLING AND SPECIATION FIELD DATA SHEET

TEST ID	2
PLANT	Plant 3
LOCATION	Unit 2 Air Heater Outlet
DATE	6/7/05
OPERATOR(S)	GLC / ST
AMBIENT TEMP [°F]	100
BAR. PRESS. [" Hg]	29.29

METER BOX	N-4
PITOT TUBE DESC	E-5
PROBE LENGTH [ft]	10'
NOZZLE ID [inch]	5/32" B 0.158
%H_2O (Assumed)	
FILTER ID	14
K FACTOR	0.406

CAL. DATA: delta H	1.933
Y	0.960
C(p)	0.832
FILTER BOX SETTING	—
PROBE HTR SETTING	325
DUCT X-SECTION	circ ? rect ? other:
DUCT DIMENSIONS	16' x 12'
DUCT AREA	

Comments:

TRAVERSE POINT [port-inch]	CLOCK TIME (24-hr)	SAMPLE TIME [minute]	STATIC PRES [" H_2O]	PITOT HEAD [" H_2O]	METER DIFF PRESSURE [" H_2O]	METER VACUUM [" Hg]	METER READING [ft^3]	METER TEMP (6) [oF] (7) inlet	METER TEMP (6) [oF] (7) outlet	STACK TEMP [°F] (1)	PROBE TEMP [°F] (2)	FILTER BOX [°F]	LAST IMP TEMP [°F] (4)	METER EXHAUST O_2 [% vol]	METER EXHAUST CO_2 [% vol]
	1705	0					713.00								
4/2'		10		1.30	0.52	4.0	717.29	114	115	347	322		78	7.7	12.5
4/2'		20		1.30	0.52	4.5	721.52	114	115	347	327		66	6.4	13.7
4/5'		30		1.10	0.44	4.5	725.46	112	114	349	322		63	6.2	14.0
4/5'		40	-16.95	1.10	0.44	5.0	729.35	110	111	349	320		63	6.6	13.6
4/8'		50		0.86	0.35	5.0	732.97	110	109	342	322		62	6.5	13.9
4/8'		60	-16.60	0.86	0.35	5.5	736.49	111	110	344	325		64	6.5	13.6
					LEAK CHECK GOOD — 0 @ 10" Hg										
	1813						736.80								
2/2'		70		1.30	0.52	4.5	741.09	110	108	368	324		63	6.6	13.6
2/2'		80		1.30	0.52	5.0	745.31	110	108	368	326		61	6.2	13.9
2/5'		90		1.30	0.52	5.5	749.45	110	107	372	324		61	5.9	13.9
2/5'		100	-16.78	1.30	0.53	6.0	753.64	108	105	371	322		62	6.4	13.8
2/8'		110		1.20	0.48	7.0	757.73	106	104	367	325		61	6.2	14.0
2/8'		120	-16.6	1.20	0.48	8.0	761.75	105	102	366	320		61	6.3	13.9
				Run											
			-16.7	1.171	0.473		48.44	109.4		357.5				6.5	13.7

Sample Train Leak Checks: Pre Test 0 ft^3 @ 10 in. Hg; Post Test ~0 ft^3 @ 10 in. Hg

Pitot Tube Leak Checks: PreTest 0 @ 6 in. H_2O; Post Test 0 @ 6 in. H_2O

.605 / 15 SEC

CONSOL ENERGY.

NOTE: Purge for 10 minutes at end of sampling.

96.7

ONTARIO HYDRO Hg SAMPLING AND SPECIATION FIELD DATA SHEET

TEST ID	TW2	METER BOX	N2	CAL. DATA: delta H	2.012	Comments:	
PLANT	Plant 3	PITOT TUBE DESC	E-2	Y	0.966		
LOCATION	Unit 2 FGD inlet	PROBE LENGTH [ft]	10	C(p)	0.837		
DATE	6/7/05	NOZZLE ID [inch]	5/16 E = 0.309	FILTER BOX SETTING	NA		
OPERATOR(S)	JAW	%H_2O (Assumed)	7	PROBE HTR SETTING	325		
AMBIENT TEMP [°F]	95	FILTER ID	2	DUCT X-SECTION	circ ?	rect ?	other:
BAR. PRESS. [" Hg]	29.29	K FACTOR	6.75	DUCT DIMENSIONS	22' x 28'6"	DUCT AREA	

TRAVERSE POINT [port-inch]	CLOCK TIME (24-hr)	SAMPLE TIME [minute]	STATIC PRES [" H_2O]	PITOT HEAD [" H_2O]	METER DIFF PRESSURE [" H_2O]	METER VACUUM [" Hg]	METER READING [ft^3]	METER TEMP [oF] inlet	METER TEMP [oF] outlet	STACK TEMP [°F]	PROBE TEMP [°F]	FILTER BOX [°F]	LAST IMP TEMP [°F]	METER EXHAUST O_2 [% vol]	METER EXHAUST CO_2 [% vol]	
	17:05	0					811.60									O_2 meter Cal Check
	17:15	10	8.29	0.26	1.75	5.0	819.00	91	90	351	328		51	7.4	12.8	
	17:25	20	8.18	0.27	1.80	5.0	826.44	93	90	351	318		50	5.8	14.3	
	17:35	30	8.28	0.28	1.90	5.5	834.01	94	91	351	330		51	6.7	13.4	20.9 on
	17:45	40	8.48	0.28	1.90	6.0	841.59	95	91	353	319		51	6.9	13.3	
	17:55	50	8.54	0.28	1.90	6.0	849.20	97	93	353	329		52	6.7	13.5	
	18:05	60	8.53	0.27	1.80	6.0	856.70	100	94	355	326		54	6.8	13.4	20.2 Recal
	18:15	70	8.42	0.28	1.90	6.0	864.35	100	95	355	318		54	7.0	13.2	
	18:25	80	8.58	0.29	1.95	6.5	872.11	101	95	356	325		54	7.2	13.0	
	18:35	90	8.48	0.27	1.80	6.0	879.64	102	96	356	320		54	6.4	13.7	20.9 OK
	18:45	100	8.56	0.28	1.90	6.5	887.28	102	97	357	318		55	7.4	12.8	
	18:55	110	8.51	0.29	1.95	7.0	895.05	102	97	357	332		56	6.6	13.6	
	19:05	120	8.17	0.27	1.80	6.5	902.63	103	98	356	317		57	6.8	13.4	
				(RMS)												
			8.42	0.277	1.86		91.03		96.1	354.3				6.81	13.37	

Sample Train Leak Checks: Pre Test Leak 56 ft^3 @ 11 in. Hg; Post Test Leak 56 ft^3 @ 10 in. Hg

Pitot Tube Leak Checks: PreTest OK @ 6 in. H_2O; Post Test OK @ 7 in. H_2O

CONSOLENERGY

NOTE: Purge for 10 minutes at end of sampling.

Post-test air purge for 10 min @ ΔH = 1.0

170.3

01
K-0.517

ONTARIO HYDRO Hg SAMPLING AND SPECIATION FIELD DATA SHEET

TEST ID	Test #2	METER BOX	N 5	CAL. DATA: delta H	2.015	Comments:	
PLANT	Plant 3	PITOT TUBE DESC	E-1	Y	1.011		
LOCATION	Unit 2 Stack	PROBE LENGTH [ft]	6	C(p)	0.833		
DATE	6-7-05	NOZZLE ID [inch]	5/32 A=0155	FILTER BOX SETTING	250		
OPERATOR(S)		%H_2O (Assumed)		PROBE HTR SETTING	250		
AMBIENT TEMP [°F]	98	FILTER ID		DUCT X-SECTION	circ ?	rect ?	other:
BAR. PRESS. [" Hg]	29.29	K FACTOR		DUCT DIMENSIONS	19 ft	DUCT AREA	

TRAVERSE POINT [port-inch]	CLOCK TIME (24-hr)	SAMPLE TIME [minute]	STATIC PRES [" H_2O]	PITOT HEAD [" H_2O]	METER DIFF PRESSURE [" H_2O]	METER VACUUM [" Hg]	METER READING [ft^3]	METER TEMP [oF] inlet (6)	METER TEMP [oF] outlet (7)	STACK TEMP [°F] (1)	PROBE TEMP [°F] (2)	FILTER BOX [°F] (3)	LAST IMP TEMP [°F] (4)	METER EXHAUST O_2 [% vol]	METER EXHAUST CO_2 [% vol]
	17:05	0					680.10								
	17:15	10	~~2.50~~	~~2.50~~	1.28	4.5	686.06	99	101	136	250	322	61	6.6	10.6
	17:25	20	1.0	2.60	1.30	5.0	692.35	102	103	135	248	324	54	7.3	10.2
	17:35	30	1.35	3.10	1.58	5.0	698.80	104	104	136	249	325	56	6.6	10.9
	17:45			3.10	1.58	5.5	705.68	106	102	136	248	327	55	6.3	10.9
	17:55	40	1.35	3.40	1.72	6.0	712.77	107	102	136	247	326	52	7.0	10.4
	18:05	50		3.35	1.70	7.0	720.04	108	101	135	247	326	52	6.7	10.5
	18:15	60	1.40	3.35	1.70	7.0	727.20	108	101	136	249	325	54	6.4	10.8
	18:25		~~1.30~~	3.35	1.70	7.0	734.43	108	99	136	248	325	55	6.6	10.7
	18:35	70	1.30	3.20	1.65	7.0	741.57	108	99	136	246	325	58	7.2	10.3
	18:45	80		3.20	1.65	7.0	748.72	108	98	135	248	325	62	6.1	11.0
	18:55	90	1.10	2.70	1.38	6.0	755.38	108	98	136	248	326	58	6.9	10.5
	19:05		1.10	2.70	1.38	6.0	762.00	108	98	136	251	327	64	6.8	10.6
		100													
		110		Avg											
		120		3.037											
		120	-1.23	3.04	1.552		81.9	103.3		135.8				6.71	

Sample Train Pre Test <0.01 ft^3 @ 7 in. Hg
Leak Checks: Post Test <0.01 ft^3 @ 7 in. Hg

Pitot Tube PreTest <0.01 @ 5 in. H_2O
Leak Checks: Post Test <0.01 @ 5 in. H_2O

CONSOL ENERGY.

NOTE: Purge for 10 minutes at end of sampling.

310.9

ONTARIO HYDRO Hg SAMPLING AND SPECIATION FIELD DATA SHEET

TEST ID	SCRI-3	METER BOX	N-3	CAL. DATA: delta H	1.982
PLANT	Plant 3	PITOT TUBE DESC		Y	1.026
LOCATION	Unit 2 SCR Inlet	PROBE LENGTH [ft]	12	C(p)	
DATE	6-8-05	NOZZLE ID [inch]		FILTER BOX SETTING	NA
OPERATOR(S)	JL	%H_2O (Assumed)	10	PROBE HTR SETTING	325
AMBIENT TEMP [°F]	87	FILTER ID	5	DUCT X-SECTION	circ ? rect ? other:
BAR. PRESS. [" Hg]	29.32	K FACTOR	1.00	DUCT DIMENSIONS	9'4"x78' DUCT AREA

Comments:

TRAVERSE POINT [port-inch]	CLOCK TIME (24-hr)	SAMPLE TIME [minute]	STATIC PRES [" H_2O]	PITOT HEAD [" H_2O]	METER DIFF PRESSURE [" H_2O]	METER VACUUM [" Hg]	METER READING [ft^3]	METER TEMP [oF] inlet	METER TEMP [oF] outlet	STACK TEMP [°F]	PROBE TEMP [°F]	FILTER BOX [°F]	LAST IMP TEMP [°F]	METER EXHAUST O_2 [% vol]	METER EXHAUST CO_2 [% vol]
	1025	0					242.800								
A-B-1	1035	10		0.53	0.53	5.0	246.790	96	96	718	299	NA	65		
	1045	20	-7.53	0.52	0.52	5.5	250.522	90	93	722	284		61	5.2	14.9
	1055	30		0.52	0.52	6.0	254.251	90	92	725	289		67		
	1105	40		0.52	0.52	7.0	258.063	92	92	726	303		66	5.3	14.8
A-B-2	1115	50	-7.40	0.54	0.54	8.0	261.89	94	93	734	310		69	4.9	15.2
	1125	60		0.54	0.54	9.0	265.72	93	92	733	324		67		
	1135	70		0.54	0.54	10.0	269.486	93	92	732	326		68		
	1145	80	-7.5	0.54	0.54	11.5	273.316	92	90	732	331		65	4.7	15.4
A-B-3	1155	90		0.43	0.43	12.0	276.98	89	89	733	324		63		
	1205	100	-7.29	0.43	0.43	12.5	280.333	89	88	736	312		62	5.3	14.8
	1215	110		0.43	0.43	13.0	283.768	90	88	737	311		63		
	1225	120	-7.50	0.43	0.43	14.0	287.207	91	89	739	310		63	5.6	14.5
				NA											
			-7.45	0.500	0.502	15.0	44.407	91.4		730.6				5.2	14.9

Sample Train Leak Checks: Pre Test 0.000 ft^3 @ 10.0 in. Hg; Post Test 0.000 ft^3 @ _____ in. Hg

Pitot Tube Leak Checks: PreTest OK @ 7 in. H_2O; Post Test _____ @ _____ in. H_2O

CONSOLENERGY

NOTE: Purge for 10 minutes at end of sampling.

102.2

ONTARIO HYDRO Hg SAMPLING AND SPECIATION FIELD DATA SHEET

TEST ID	SCRO - 3	METER BOX	1	CAL. DATA: delta H	1.976	Comments:	
PLANT	Plant 3	PITOT TUBE DESC		Y	0.987		
LOCATION	Unit 2 SCR Outlet	PROBE LENGTH [ft]	10'	C(p)			
DATE	6-8-05	NOZZLE ID [inch]		FILTER BOX SETTING	NA		
OPERATOR(S)	RLO & BPS	%H_2O (Assumed)		PROBE HTR SETTING			
AMBIENT TEMP [°F]	~94°	FILTER ID	11 & 12	DUCT X-SECTION	circ ?	rect ?	other:
BAR. PRESS. [" Hg]	29.32	K FACTOR	0.522	DUCT DIMENSIONS	11' x 32'	DUCT AREA	

TRAVERSE POINT [port-inch]	CLOCK TIME (24-hr)	SAMPLE TIME [minute]	STATIC PRES [" H_2O]	PITOT HEAD [" H_2O]	METER DIFF PRESSURE [" H_2O]	METER VACUUM [" Hg]	METER READING [ft^3]	METER TEMP [oF] inlet	METER TEMP [oF] outlet	STACK TEMP [°F]	PROBE TEMP [°F]	FILTER BOX [°F]	LAST IMP TEMP [°F]	METER EXHAUST O_2 [% vol]	METER EXHAUST CO_2 [% vol]
	1025	0					412.90								
		10	-11.1	1.40	.73	5	417.64	95	91	712	329	—	58	4.3	—
		20	—	1.40	.73	8	422.35	97	92	714	332		54	3.9	
		30	-11.1	1.40	.73	10.5	427.06	98	92	713	327		57	4.4	
		40	—	1.40	.73	14	431.77	99	93	713	328		58	4.1	
STOP	1109	45 ~~30~~	-11.0	1.40	* .64 LAST	15.5	434.04	100	94	714	329		60	3.9	
START	1130	55 ~~30~~	—	1.40	.73	5	~~434.25~~ 439.00	98	94	713	327		55	3.9	
		65 ~~40~~	-10.8	1.40	.73	7	443.75	101	95	714	328		55	4.4	
		75 ~~50~~	—	1.40	.73	9	448.48	100	95	715	331		56	4.4	
		85 ~~60~~	-10.4	1.40	.73	11	453.21	102	96	715	327		57	4.1	
STOP	1220	95 ~~100~~	—	1.40	.73	15	457.94	103	97	715	328		57	4.0	
		110													
		120													
							40.29								
		95	-10.9	1.40	0.73		~~45.04~~	96.6		713.8				4.1	

Sample Train Leak Checks: Pre Test OK ft^3 @ 10 in. Hg; Post Test OK ft^3 @ 15.5 in. Hg

Pitot Tube Leak Checks: PreTest OK @ 7 in. H_2O; Post Test OK @ 7 in. H_2O

CONSOL ENERGY

NOTE: Purge for 10 minutes at end of sampling.

6 * OK

107.4

ONTARIO HYDRO Hg SAMPLING AND SPECIATION FIELD DATA SHEET

TEST ID	3	METER BOX	N.4	CAL. DATA: delta H	1.983	Comments:	
PLANT	Plant 3	PITOT TUBE DESC	E-5	Y	0.960		
LOCATION	Unit 2 Air Heater Outlet	PROBE LENGTH [ft]	10'	C(p)	0.832		
DATE	6/8/05	NOZZLE ID [inch]	5/32 B, 0.158"	FILTER BOX SETTING	—		
OPERATOR(S)	GLC / ST	%H_2O (Assumed)		PROBE HTR SETTING	325		
AMBIENT TEMP [°F]	90	FILTER ID	15	DUCT X-SECTION	circ ?	rect ?	other:
BAR. PRESS. [" Hg]	29.32	K FACTOR	0.406	DUCT DIMENSIONS	16' x 12'	DUCT AREA	

TRAVERSE POINT [port-inch]	CLOCK TIME (24-hr)	SAMPLE TIME [minute]	STATIC PRES [" H_2O]	PITOT HEAD [" H_2O]	METER DIFF PRESSURE [" H_2O]	METER VACUUM [" Hg]	METER READING [ft^3]	METER TEMP (6) [oF] inlet	METER TEMP (7) [oF] outlet	STACK TEMP [°F] (1)	PROBE TEMP [°F] (2)	FILTER BOX [°F]	LAST IMP TEMP [°F] (4)	METER EXHAUST O_2 [% vol]	METER EXHAUST CO_2 [% vol]
	1025	0					775.00								
4/2'		10		1.40	0.56	4.0	779.47	95	93	345	321		52	7.7	12.5
4/2'		20		1.40	0.56	4.5	783.79	96	93	346	322		49	7.7	12.5
4/5'		30	-16.5	1.25	0.50	5.0	787.90	98	93	349	322		51	6.6	13.6
4/5		40		1.25	0.50	5.5	791.98	99	94	350	318		50	7.0	13.2
4/8'		50	-16.4	0.88	0.36	5.0	795.57	100	94	339	321		51	7.2	13.0
4/8'	1125	60		0.88	0.36	5.5	799.07	100	94	339	322		53	7.6	12.6
					LEAK CHECK <0.02 ft3 @ 10" Hg										
	1134						799.50								
2/2'		70		1.30	0.52	4.0	803.72	98	93	363	322		52	7.2	13.0
2/2'		80		1.30	0.52	4.5	807.87	99	93	363	318		51	6.7	13.5
2/5'		90	-16.1	1.30	0.52	5.0	812.02	100	93	365	320		52	6.5	13.7
2/5'		100		1.30	0.52	6.0	816.18	101	94	365	323		53	6.3	13.9
2/8'		110		1.30	0.52	7.0	820.34	101	94	364	322		54	6.8	13.4
2/8'	1234	120	-16.3	1.30	0.52	8.0	824.51	101	95	364	320		53	7.3	12.9
				RMS											
			-16.3	1.232	0.543		49.08	96.3		354.3				7.05	13.2

Sample Train Leak Checks: Pre Test <0.02 ft^3 @ 10 in. Hg; Post Test <0.02 ft^3 @ 10 in. Hg

Pitot Tube Leak Checks: PreTest 0 @ 6 in. H_2O; Post Test 0 @ 5 in. H_2O

CONSOLENERGY

NOTE: Purge for 10 minutes at end of sampling.

103.9

ONTARIO HYDRO Hg SAMPLING AND SPECIATION FIELD DATA SHEET

TEST ID	THREE	METER BOX	N2	CAL. DATA: delta H	2.012	Comments:	
PLANT	Plant 3	PITOT TUBE DESC	E-2	Y	0.966		
LOCATION	Unit 2 FGD Inlet	PROBE LENGTH [ft]	10	C(p)	0.837	Filter lost in Stack	
DATE	6/8/05	NOZZLE ID [inch]	5/16 E 0.309	FILTER BOX SETTING	NA	at end of test	
OPERATOR(S)	JAW	%H_2O (Assumed)	9	PROBE HTR SETTING	325		
AMBIENT TEMP [°F]	85	FILTER ID	~~3~~ 4	DUCT X-SECTION	circ ? / rect ?	other:	
BAR. PRESS. [" Hg]	29.32	K FACTOR	6.5	DUCT DIMENSIONS	22' x 28'6"	DUCT AREA	

TRAVERSE POINT [port-inch]	CLOCK TIME (24-hr)	SAMPLE TIME [minute]	STATIC PRES [" H_2O]	PITOT HEAD [" H_2O]	METER DIFF PRESSURE [" H_2O]	METER VACUUM [" Hg]	METER READING [ft^3]	METER TEMP [oF] inlet	METER TEMP [oF] outlet	STACK TEMP [°F]	PROBE TEMP [°F]	FILTER BOX [°F]	LAST IMP TEMP [°F]	METER EXHAUST O_2 [% vol]	METER EXHAUST CO_2 [% vol]	
	10:24	0					911.60									O_2 meter calib. check
	10:34	10	8.58	0.30	1.95	6.0	919.28	88	84	356	328		53	6.8	13.4	
	10:44	20	8.45	0.29	1.90	5.5	926.89	93	86	356	315		52	6.2	13.9	
	10:54	30	8.52	0.31	2.00	6.0	934.67	93	87	356	324		51	6.8	13.4	20.8 OK
	11:04	40	8.39	0.28	1.80	6.0	942.13	93	87	355	317		52	6.8	13.4	
	11:14	50	8.40	0.28	1.80	6.0	949.49	93	88	355	317		52	6.4	13.8	
	11:24	60	8.40	0.26	1.70	6.0	956.79	92	88	356	320		52	7.2	13.0	20.9 OK
	11:34	70	8.46	0.25	1.60	6.0	963.88	92	87	356	323		52	6.9	13.3	
	11:44	80	8.42	0.24	1.55	6.0	970.85	91	87	355	321		54	7.4	12.8	
	11:54	90	8.53	0.24	1.55	6.0	977.76	91	87	356	327		51	6.8	13.4	20.7 Recal
	12:04	100	8.33	0.25	1.60	6.0	984.67	92	87	355	315		52	6.5	13.6	
	12:14	110	8.25	0.24	1.55	6.0	991.61	91	87	354	328		51	7.0	13.2	
	12:24	120	8.21	0.25	1.60	6.5	998.56	88	85	355	327		51	6.8	13.4	21.5 Recal
				RMS												
			8.41	0.265	1.583		86.96		89.0	355.4				6.80	13.38	

Sample Train Leak Checks: Pre Test leak check ft³ @ -12 in. Hg; Post Test leak check ft³ @ -10 in. Hg

Pitot Tube Leak Checks: PreTest OK @ 6 in. H_2O; Post Test OK @ 6 in. H_2O

CONSOLENERGY

Post-test air purge for 10 min @ ΔH = 1.0

NOTE: Purge for 10 minutes at end of sampling.

179.2

ONTARIO HYDRO Hg SAMPLING AND SPECIATION FIELD DATA SHEET

TEST ID	Test #3	METER BOX	N 5	CAL. DATA: delta H	2.095	Comments:	
PLANT	Plant 3	PITOT TUBE DESC	E-1	Y	1.011		
LOCATION	Unit 2 Stack	PROBE LENGTH [ft]	6	C(p)	0.833		
DATE	6-8-05	NOZZLE ID [inch]	5/32 A = 0.155	FILTER BOX SETTING	250		
OPERATOR(S)	KC/LR	%H_2O (Assumed)	16	PROBE HTR SETTING	250		
AMBIENT TEMP [°F]	95	FILTER ID	#3	DUCT X-SECTION	circ ?	rect ?	other:
BAR. PRESS. [" Hg]	29.32	K FACTOR	0.984	DUCT DIMENSIONS	19 ft	DUCT AREA	

TRAVERSE POINT [port-inch]	CLOCK TIME (24-hr)	SAMPLE TIME [minute]	STATIC PRES [" H_2O]	PITOT HEAD [" H_2O]	METER DIFF PRESSURE [" H_2O]	METER VACUUM [" Hg]	METER READING [ft^3]	METER TEMP [oF] inlet	METER TEMP [oF] outlet	STACK TEMP [°F]	PROBE TEMP [°F]	FILTER BOX [°F]	LAST IMP TEMP [°F]	METER EXHAUST O_2 [% vol]	METER EXHAUST CO_2 [% vol]
	10:25	0					769.50								
	10:35	10	-1.10	2.75	1.32	4.5	775.80	94	94	136	247	325	51	6.5	10.7
	10:45	20		2.70	1.30	4.5	782.21	95	93	136	248	324	53	6.9	10.5
	10:55	30	-1.40	3.2	1.55	6.0	789.21	98	93	136	247	325	59	7.4	10.1
	11:05			3.2	1.55	6.0	796.27	99	93	136	249	325	60	6.9	10.5
	11:15	40	-1.40	3.3	1.58	6.0	803.29	101	93	136	248	325	47	7.4	10.1
	11:25	50		3.2	1.55	6.0	810.37	102	94	136	249	326	46	6.8	10.6
	11:35	60	-1.40	3.2	1.55	6.0	817.43	102	93	135	248	325	47	7.3	10.2
	11:45			3.2	1.55	6.0	824.55	102	93	136	248	325	50	6.5	10.7
	11:55	70	-1.40	3.1	1.49	6.0	831.61	102	92	136	249	325	46	7.3	10.1
	12:05	80		3.1	1.49	6.0	838.64	103	92	136	248	327	51	7.0	10.4
	12:15	90	-1.30	2.70	1.30	5.5	845.27	102	92	136	250	325	52	6.5	10.7
	12:25			2.75	1.32	5.5	~~851.85~~	102	92	136	248	327	54	6.5	10.7
		100					851.85								
		110													
		120		RMS											
			-1.33	3.029	1.46		82.35	96.5		135.9				6.9	10.4

Sample Train Leak Checks: Pre Test <0.01 ft^3 @ 7 in. Hg; Post Test <0.01 ft^3 @ 7 in. Hg

Pitot Tube Leak Checks: PreTest <0.01 @ 5 in. H_2O; Post Test <0.01 @ 5 in. H_2O

CONSOL ENERGY

NOTE: Purge for 10 minutes at end of sampling.

318.9

C B A

ONTARIO HYDRO Hg SAMPLING AND SPECIATION FIELD DATA SHEET

Work Port

B A

TEST ID	SCRI-4	METER BOX	N-3	CAL. DATA: delta H	1.982	Comments:	
PLANT	Plant 3	PITOT TUBE DESC		Y	1.026		
LOCATION	Unit 2 SCR Inlet	PROBE LENGTH [ft]	12	C(p)			
DATE	6-8-05	NOZZLE ID [inch]		FILTER BOX SETTING	NA		
OPERATOR(S)	JC	%H_2O (Assumed)	10	PROBE HTR SETTING	325		
AMBIENT TEMP [°F]	101	FILTER ID	6	DUCT X-SECTION	circ ?	rect ?	other:
BAR. PRESS. [" Hg]	29.28	K FACTOR	1.00	DUCT DIMENSIONS	9'4"x78'	DUCT AREA	

TRAVERSE POINT [port-inch]	CLOCK TIME (24-hr)	SAMPLE TIME [minute]	STATIC PRES [" H_2O]	PITOT HEAD [" H_2O]	METER DIFF PRESSURE [" H_2O]	METER VACUUM [" Hg]	METER READING [ft^3]	METER TEMP [oF] inlet	METER TEMP [oF] outlet	STACK TEMP [°F]	PROBE TEMP [°F]	FILTER BOX [°F]	LAST IMP TEMP [°F]	METER EXHAUST O_2 [% vol]	METER EXHAUST CO_2 [% vol]
	1436	0					293.250			708					
A-B-1	1446	10		0.55	0.55	5.0	297.173	102	102	~~326~~ 708	326	NA	67		
	1456	20	-7.23	0.53	0.53	6.0	300.965	106	105	710	332		66	4.0	16.1
	1506	30		0.53	0.53	7.0	304.792	107	106	708	334		61		
A-B-2	1516	40		0.53	0.53	8.0	308.61	104	103	728	328		58		
	1526	50	-7.37	0.53	0.53	9.0	312.41	108	107	737	327		61	4.7	15.4
	1536	60		0.53	0.53	10.5	316.184	110	108	737	329		61		
A-B-3	1546	70		0.40	0.40	11.5	319.670	111	109	743	328		62	4.2	15.9
	1556	80	-7.54	0.40	0.40	12.5	323.030	110	109	743	327		64		
	1606	90		0.40	0.40	13.5	326.377	109	109	743	327		57		
	1616	100		0.40	0.40	15.0	329.740	110	110	743	332		55	4.6	15.5
	1626	110	-7.42	0.40	0.40	17.0	333.356	110	110	742	334		55		
		120													
		110	-7.39	0.470	0.473		40.106	107.5		731.1				4.375	

Sample Train Pre-Test 0.000 ft^3 @ 10 in. Hg
Leak Checks: Post Test 0.000 @ 18 in. Hg

Pitot Tube PreTest OK @ 7 in. H_2O
Leak Checks: Post Test OK @ 8 in. H_2O

CONSOLENERGY

NOTE: Purge for 10 minutes at end of sampling.

102.0

ONTARIO HYDRO Hg SAMPLING AND SPECIATION FIELD DATA SHEET

TEST ID	SCRO-4	METER BOX	1	CAL. DATA: delta H	1.976	Comments:	
PLANT	Plant 3	PITOT TUBE DESC		Y	0.987		
LOCATION	Unit 2 SCR Outlet	PROBE LENGTH [ft]	10'	C(p)			
DATE	6-8-05	NOZZLE ID [inch]		FILTER BOX SETTING	NA		
OPERATOR(S)	RLO & BPS	%H_2O (Assumed)		PROBE HTR SETTING			
AMBIENT TEMP [°F]	~90	FILTER ID	27 & 28	DUCT X-SECTION	circ ?	rect ?	other:
BAR. PRESS. [" Hg]	29.28	K FACTOR	0.522	DUCT DIMENSIONS	11' x 32'	DUCT AREA	

TRAVERSE POINT [port-inch]	CLOCK TIME (24-hr)	SAMPLE TIME [minute]	STATIC PRES [" H_2O]	PITOT HEAD [" H_2O]	METER DIFF PRESSURE [" H_2O]	METER VACUUM [" Hg]	METER READING [ft^3]	METER TEMP [oF] inlet	METER TEMP [oF] outlet	STACK TEMP [°F]	PROBE TEMP [°F]	FILTER BOX [°F]	LAST-IMP TEMP [°F]	METER EXHAUST O_2 [% vol]	METER EXHAUST CO_2 [% vol]
	1437	0					464.60								
		10	-11.1	1.40	.73	6	469.40	98	96	717	327	—	60	3.9	—
		20	—	1.40	.73	8	474.17	102	97	718	326		59	4.2	
		30	-11.1	1.40	.73	10	478.95	104	98	718	327		62	4.4	
		40	—	1.40	.73	13	483.73	105	99	718	330		64	4.5	
STOP	1522	45 ~~50~~	-10.6	1.40	.73	15.5	486.11	107	101	719	326		65	4.4	
START	1543	55 ~~60~~	—	1.40	.73	6	~~486.25~~ 491.09	109	104	719	329		63	4.6	
		65 ~~70~~	-11.1	1.40	0.73	7.5	495.86	114	107	719	326		65	3.9	
		75 ~~80~~	—	1.40	0.73	9	500.61	116	109	719	330		67	3.8	
		85 ~~90~~	-11.3	1.40	.73	11	505.43	117	111	719	327		68	3.9	
STOP	1633	95 ~~100~~	—	1.40	.73	15	510.26	118	112	718	327		68	4.0	
		110													
		120													
		95	-11.04	1.40	0.73		45.52	106.2		718.4				4.16	

Sample Train Leak Checks: Pre Test OK ft^3 @ 10 in. Hg; Post Test OK ft^3 @ 15.5 in. Hg

Pitot Tube Leak Checks: PreTest OK @ 7 in. H_2O; Post Test OK @ 7 in. H_2O

CONSOLENERGY

NOTE: Purge for 10 minutes at end of sampling.

6 * OK

1054

ONTARIO HYDRO Hg SAMPLING AND SPECIATION FIELD DATA SHEET

TEST ID	4	METER BOX	N-4	CAL. DATA: delta H	1.983	Comments:	
PLANT	Plant 3	PITOT TUBE DESC	E-5	Y	0.960		
LOCATION	Unit 2 Air Heater Outlet	PROBE LENGTH [ft]	10'	C(p)	0.832		
DATE	6/8/05	NOZZLE ID [inch]	5/32B, 0.158"	FILTER BOX SETTING	—		
OPERATOR(S)	GLC/ST	%H_2O (Assumed)		PROBE HTR SETTING	325		
AMBIENT TEMP [°F]	100	FILTER ID	16	DUCT X-SECTION	circ ?	rect ?	other:
BAR. PRESS. [" Hg]	29.28	K FACTOR	0.406	DUCT DIMENSIONS	16' x 12'	DUCT AREA	

TRAVERSE POINT [port-inch]	CLOCK TIME (24-hr)	SAMPLE TIME [minute]	STATIC PRES [" H_2O]	PITOT HEAD [" H_2O]	METER DIFF PRESSURE [" H_2O]	METER VACUUM [" Hg]	METER READING [ft^3]	METER TEMP (6) [oF] (7) inlet	METER TEMP (6) [oF] (7) outlet	STACK TEMP [°F] (1)	PROBE TEMP [°F] (2)	FILTER BOX [°F]	LAST IMP TEMP [°F] (4)	METER EXHAUST O_2 [% vol]	METER EXHAUST CO_2 [% vol]
	1437	0					829.60								
4/2'		10		1.40	0.56	4.0	834.02	104	101	347	320		70	7.1	13.1
4/2'		20		1.40	0.56	4.5	838.39	108	102	349	322		61	7.0	13.2
4/5'		30	-16.2	1.20	0.48	5.0	842.48	111	104	349	318		61	6.3	13.9
4/5'		40		1.20	0.48	5.5	846.60	114	106	349	322		62	6.5	13.7
4/8'		50		0.88	0.36	6.0	850.22	114	108	343	320		65	6.8	13.4
4/8'	1537	60	-16.0	0.88	0.36	7.0	853.75	115	110	343	320		66	6.4	13.8
					LEAK	CHECK	OK →	@	10" Hg						
	1543						854.00								
2/2'		70		1.25	0.50	5.0	858.2_	117	112	366	323		65	6.8	13.4
2/2'		80		1.25	0.50	5.5	862.37	118	114	368	325		63	6.7	13.5
2/5'		90	-16.1	1.30	0.52	6.5	866.58	120	115	369	324		63	6.2	14.0
2/5'		100		1.30	0.52	7.5	870.84	120	117	368	321		64	5.8	14.3
2/8'		110	-15.9	1.30	0.52	8.0	875.02	120	118	368	322		65	6.8	13.4
2/8'	1643	120		1.30	0.52	9.0	879.30	121	119	368	318		63	5.9	14.2
				RMS											
			-16.05	1.216	0.49		49.45	112.8		357.3				6.53	

Sample Train Leak Checks: Pre Test 0 ft^3 @ 10 in. Hg; Post Test 0 ft^3 @ 10 in. Hg

Pitot Tube Leak Checks: PreTest 0 @ 5 in. H_2O; Post Test 0 @ 5 in. H_2O

CONSOL ENERGY

✓ NOTE: Purge for 10 minutes at end of sampling.

102.4

ONTARIO HYDRO Hg SAMPLING AND SPECIATION FIELD DATA SHEET

TEST ID	Four	METER BOX	N2	CAL. DATA: delta H	2.012	Comments:	
PLANT	Plant 3	PITOT TUBE DESC	E-2	Y	0.966		
LOCATION	Unit 2 FGD Inlet	PROBE LENGTH [ft]	10	C(p)	0.837		
DATE	6/8/05	NOZZLE ID [inch]	5/16 B = 0.312	FILTER BOX SETTING	NA		
OPERATOR(S)	JAW	%H_2O (Assumed)	9	PROBE HTR SETTING	325		
AMBIENT TEMP [°F]	100	FILTER ID	5	DUCT X-SECTION	circ ?	rect ?	other:
BAR. PRESS. [" Hg]	29.28	K FACTOR	6.7	DUCT DIMENSIONS	22' x 28'6"	DUCT AREA	

TRAVERSE POINT [port-inch]	CLOCK TIME (24-hr)	SAMPLE TIME [minute]	STATIC PRES [" H_2O]	PITOT HEAD [" H_2O]	METER DIFF PRESSURE [" H_2O]	METER VACUUM [" Hg]	METER READING [ft^3]	METER TEMP [oF] inlet	METER TEMP [oF] outlet	STACK TEMP [°F]	PROBE TEMP [°F]	FILTER BOX [°F]	LAST IMP TEMP [°F]	METER EXHAUST O_2 [% vol]	METER EXHAUST CO_2 [% vol]	O_2 meter calib check
	14:37	0					008.40									
	14:47	10	8.49	0.30	2.00	6.0	016.28	96	92	358	320		53	6.5	13.7	
	14:57	20	8.51	0.30	2.00	5.5	024.09	98	93	353	330		55	6.6	13.6	
	15:07	30	8.69	0.28	1.90	5.5	031.77	99	94	357	320		54	7.0	13.2	21.4 Recal
	15:17	40	8.48	0.29	1.95	6.0	039.52	97	93	358	328		52	6.3	13.8	
	15:27	50	8.50	0.27	1.80	6.0	047.11	95	92	357	333		51	6.9	13.3	
	15:37	60	8.70	0.28	1.90	6.0	054.73	94	91	358	325		51	6.9	13.3	21.6 Recal
	15:47	70	8.50	0.27	1.80	6.0	062.26	94	91	358	324		52	6.7	13.5	
	15:57	80	8.44	0.28	1.90	6.5	069.84	93	90	358	328		53	6.2	14.0	
	16:07	90	8.53	0.30	2.00	7.0	077.65	93	90	358	320		54	7.1	13.1	20.9 OK
	16:17	100	8.30	0.28	1.90	7.0	085.34	93	89	358	324		54	6.1	14.0	
	16:27	110	8.46	0.31	2.10	7.5	093.31	93	89	358	320		55	6.2	14.0	
	16:37	120	8.40	0.32	2.15	8.0	101.39	92	89	358	319		56	6.5	13.7	20.7 OK
			8.50	0.290 (Avg)	1.95		92.99		92.9	357.4				6.58	13.60	

Sample Train Leak Checks: Pre Test leak stop ft^3 @ 10 in. Hg; Post Test leak stop ft^3 @ 12 in. Hg

Pitot Tube Leak Checks: PreTest OK @ 8 in. H_2O; Post Test OK @ 6 in. H_2O

CONSOLENERGY.

Post-test air purge for 10 min @ ΔH = 1.0

NOTE: Purge for 10 minutes at end of sampling.

1363

.484 3.2 / 968 / 1458 / 1.58 8 8

.484 2.8 / 3572 / 968 / 1.35 5 2

ONTARIO HYDRO Hg SAMPLING AND SPECIATION FIELD DATA SHEET

TEST ID	TEST #4	METER BOX	N5	CAL. DATA: delta H	2/1/05
PLANT	Plant 3	PITOT TUBE DESC	E-1	Y	1.011
LOCATION	Unit 2 Stack	PROBE LENGTH [ft]	6	C(p)	0.833
DATE	6/8/05	NOZZLE ID [inch]	5/32=0.155	FILTER BOX SETTING	250
OPERATOR(S)	KC/LR	%H_2O (Assumed)	16	PROBE HTR SETTING	250
AMBIENT TEMP [°F]	92	FILTER ID	#4	DUCT X-SECTION	circ ? / rect ? / other:
BAR. PRESS. [" Hg]	29.28	K FACTOR	0.484	DUCT DIMENSIONS	19 ft / DUCT AREA

Comments: MAX5- Monitor was set to Read CO_2 on #2 Diesel except for last (16:35) reading.

TRAVERSE POINT [port-inch]	CLOCK TIME (24-hr)	SAMPLE TIME [minute]	STATIC PRES [" H_2O]	PITOT HEAD [" H_2O]	METER DIFF PRESSURE [" H_2O]	METER VACUUM [" Hg]	METER READING [ft^3]	METER TEMP [oF] inlet	METER TEMP [oF] outlet	STACK TEMP [°F]	PROBE TEMP [°F]	FILTER BOX [°F]	LAST IMP TEMP [°F]	METER EXHAUST O_2 [% vol]	METER EXHAUST CO_2 [% vol]
	14:35	0					859.20								
	14:45	10	-1.10	2.70	1.30	4.5	865.38	96	95	136	250	325	51	6.9	10.5
	14:55	20	-1.20	2.70	1.30	4.5	871.63	98	96	136	250	325	49	6.8	10.5
	15:05	30	-1.40	3.20	1.55	6.0	878.41	101	97	136	248	325	52	7.3	10.2
	15:15			3.20	1.55	6.0	885.23	102	96	136	257	326	54	6.5	10.8
	15:25	40	-1.40	3.30	1.58	6.0	892.10	102	96	136	250	325	53	7.1	10.2
	15:35	50		3.30	1.58	6.0	899.00	102	96	135	249	326	54	7.0	10.3
	15:45	60	-1.40	3.30	1.58	6.0	905.89	103	96	136	250	327	55	6.2	11.0
	15:55			3.30	1.58	6.0	912.74	104	96	137	249	327	58	7.4	10.2
	16:05	70	-1.40	3.20	1.55	6.0	919.57	104	97	136	250	327	56	7.0	10.5
	16:15	80		3.20	1.55	6.0	926.42	104	98	136	251	327	60	6.6	10.8
	16:25	90	1.20	2.80	1.36	5.5	932.97	104	97	136	252	326	55	7.1	10.4
	16:35		~~1.20~~	2.80	1.36	5.5	939.47	104	96	136	247	326	57	6.7	13.5
		100													
		110													
		120		RILS											
			-1.30	3.078	1.49		80.27	99.2		136.0				6.9	10.7

Sample Train Leak Checks: Pre Test <0.01 ft^3 @ 7 in. Hg; Post Test <0.01 ft^3 @ 7 in. Hg

Pitot Tube Leak Checks: PreTest <0.01 @ 5 in. H_2O; Post Test <0.01 @ 5 in. H_2O

CONSOL ENERGY

NOTE: Purge for 10 minutes at end of sampling.

308.1

ONTARIO HYDRO Hg SAMPLING AND SPECIATION FIELD DATA SHEET

TEST ID	SCRI-5	METER BOX	N-3	CAL. DATA: delta H	1.982	Comments:	1025 Stop: filter change
PLANT	Plant 3	PITOT TUBE DESC		Y	1.026		1035 Restart 357.65 vol
LOCATION	Unit 2 SCR Inlet	PROBE LENGTH [ft]	12	C(p)			
DATE	6-9-05	NOZZLE ID [inch]		FILTER BOX SETTING	NA		
OPERATOR(S)	JL	%H_2O (Assumed)	10	PROBE HTR SETTING	325		
AMBIENT TEMP [°F]	79	FILTER ID	21.22	DUCT X-SECTION	circ ?	rect ?	other:
BAR. PRESS. [" Hg]	29.34	K FACTOR	1.00	DUCT DIMENSIONS	9'4"x78'	DUCT AREA	

TRAVERSE POINT [port-inch]	CLOCK TIME (24-hr)	SAMPLE TIME [minute]	STATIC PRES [" H_2O]	PITOT HEAD [" H_2O]	METER DIFF PRESSURE [" H_2O]	METER VACUUM [" Hg]	METER READING [ft^3]	METER TEMP [oF] inlet	METER TEMP [oF] outlet	STACK TEMP [°F]	PROBE TEMP [°F]	FILTER BOX [°F]	LAST IMP TEMP [°F]	METER EXHAUST O_2 [% vol]	METER EXHAUST CO_2 [% vol]
	9:35	0					338.300								
A-B-1	9:45	10	-6.94	0.53	0.53	5.0	342.098	78	78	681	320	NA	68	3.5	16.5
	955	20		0.53	0.53	6.5	345.88	80	79	728	323		59		
	1005	30	-7.05	0.53	0.53	9.0	349.59	81	80	729	323		58	3.2	16.8
A-B-2	1015	40		0.50	0.50	11.0	353.285	84	81	735	325		60		
	1025	50	-7.05	0.50	0.50	15.0	356.9 (357.6)	85	83	736	327		61	3.9	16.1
	1045	60		0.50	0.50	6.0	361.372	85	84	738	319		65		
A-B-3	1055	70	-7.00	0.39	0.39	7.0	—	84	83	739	305		60	3.5	16.5
	1105	80		0.39	0.39	8.0	368.03	84	83	742	301		61		
	1115	90	-7.09	0.39	0.39	9.0	371.6	85	84	743	302		62	3.5	16.5
	1125	100		0.39	0.39	10.0	374.727	90	87	746	317		65		
	1135	110	-7.10	0.39	0.39	12.0	378.085	92	89	750	328		68	3.0	16.9
	1145	120		0.39	0.39	13.5	381.380	90	88	744	320		68		
				RMS											
			-7.04	0.450	0.453		42.400	~~0~~ 84.0		734.3				3.4	16.6

Sample Train Leak Checks: Pre Test 0.000 ft^3 @ 10 in. Hg; Post Test _____ ft^3 @ _____ in. Hg

Pitot Tube Leak Checks: PreTest OK @ 7 in. H_2O; Post Test _____ @ _____ in. H_2O

CONSOL ENERGY

NOTE: Purge for 10 minutes at end of sampling.

110.9

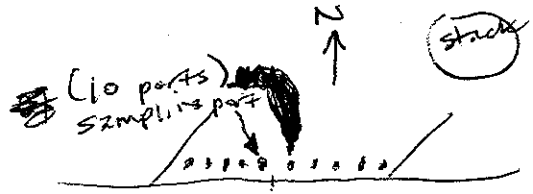

ONTARIO HYDRO Hg SAMPLING AND SPECIATION FIELD DATA SHEET

TEST ID	SCRO-5	METER BOX	1	CAL. DATA: delta H	1.976	Comments:	
PLANT	Plant 3	PITOT TUBE DESC		Y	0.987		
LOCATION	Unit 2 SCR Outlet	PROBE LENGTH [ft]	10'	C(p)			
DATE	6/9/05	NOZZLE ID [inch]		FILTER BOX SETTING	NA		
OPERATOR(S)	RLO & BPS	%H_2O (Assumed)		PROBE HTR SETTING	330		
AMBIENT TEMP [°F]	~80°	FILTER ID	29230	DUCT X-SECTION	circ ?	rect ?	other:
BAR. PRESS. [" Hg]	29.34	K FACTOR	0.55	DUCT DIMENSIONS	11' x 32'	DUCT AREA	

TRAVERSE POINT [port-inch]	CLOCK TIME (24-hr)	SAMPLE TIME [minute]	STATIC PRES [" H_2O]	PITOT HEAD [" H_2O]	METER DIFF PRESSURE [" H_2O]	METER VACUUM [" Hg]	METER READING [ft^3]	METER TEMP [oF] inlet	METER TEMP [oF] outlet	STACK TEMP [°F]	PROBE TEMP [°F]	FILTER BOX [°F]	LAST IMP TEMP [°F]	METER EXHAUST O_2 [% vol]	METER EXHAUST CO_2 [% vol]
	0935	0					516.90								
		10	-10.4	1.20	.66	5	521.38	81	78	715	326	—	54	3.3	—
		20	—	1.20	.66	7.5	525.85	84	79	716	328		52	3.1	
		30	-10.6	1.20	.66	10	530.32	87	81	717	328		56	3.6	
STOP	1015	40	—	1.20	.66	15.5	534.76	89	82	716	328		58	3.6	
START	1035	50	-10.5	1.30	.71	6	~~534.95~~ 539.60	90	85	716	327		55	3.2	
		60	—	1.30	.71	7.5	544.18	92	86	716	328		54	3.4	
		70	-10.6	1.30	.71	12	548.80	95	88	717	329		55	3.7	
STOP	1115	80	—	1.30	.66 LAST *	16	553.44	96	89	718	329		57	3.5	
		90			.71										
		100													
		110													
		120													
			-10.5	1.249	0.685		36.35	86.4		716.4				3.4	

Sample Train Leak Checks: Pre Test OK ft^3 @ 10 in. Hg; Post Test OK ft^3 @ 16 in. Hg

Pitot Tube Leak Checks: PreTest OK @ 7 in. H_2O; Post Test OK @ 7 in. H_2O

CONSOL ENERGY

NOTE: Purge for 10 minutes at end of sampling.

* OK

91.9

ONTARIO HYDRO Hg SAMPLING AND SPECIATION FIELD DATA SHEET

TEST ID	5	METER BOX	N-4	CAL. DATA: delta H	1.983
PLANT	Plant 3	PITOT TUBE DESC	E-5	Y	0.960
LOCATION	Unit 2 Air Heater Outlet	PROBE LENGTH [ft]	10	C(p)	
DATE	6/9/05	NOZZLE ID [inch]	5/32 B, 0.158"	FILTER BOX SETTING	—
OPERATOR(S)	GLC/ST	%H_2O (Assumed)		PROBE HTR SETTING	325
AMBIENT TEMP [°F]	75	FILTER ID	17	DUCT X-SECTION	circ ? / rect ? / other:
BAR. PRESS. [" Hg]	29.34	K FACTOR	0.446	DUCT DIMENSIONS	16' x 12' DUCT AREA

Comments:

TRAVERSE POINT [port-inch]	CLOCK TIME (24-hr)	SAMPLE TIME [minute]	STATIC PRES [" H_2O]	PITOT HEAD [" H_2O]	METER DIFF PRESSURE [" H_2O]	METER VACUUM [" Hg]	METER READING [ft^3]	METER TEMP [oF] (6) inlet	METER TEMP [oF] (7) outlet	STACK TEMP [°F] (1)	PROBE TEMP [°F] (2)	FILTER BOX [°F]	LAST IMP TEMP [°F] (4)	METER EXHAUST O_2 [% vol]	METER EXHAUST CO_2 [% vol]
	0935	0					887.00								
4/2'		10		1.30	0.52	4.5	891.17	81	78	351	324		47	6.9	13.2
4/2'		20	-15.55	1.30	0.52	5.0	895.31	84	79	350	319		46	6.4	13.7
4/5'		30		1.10	0.44	5.0	899.11	87	81	350	320		48	6.2	13.9
4/5'		40		1.10	0.44	6.0	902.96	90	83	351	320		49	6.0	14.1
4/8'		50	-15.7	0.79	0.34	6.0	906.39	92	84	344	323		50	6.2	13.9
4/8'	1035	60		0.79	0.34		909.77	93	86	344	320		51	6.1	14.0
					LEAK	CHECK	OK →	0 @ 10" Hg							
	1043						910.10								
2/2'		70		1.30	0.52	5.0	914.26	95	88	368	322		50	6.2	13.9
2/2'		80	-15.74	1.30	0.52	6.0	918.41	97	89	368	318		48	5.9	14.2
2/5'		90		1.25	0.50	6.5	922.50	98	90	368	320		48	5.4	14.7
2/5'		100		1.25	0.50	7.5	926.59	99	92	369	322		49	5.3	14.8
2/8'		110	-15.45	1.20	0.48	8.5	930.63	100	92	366	318		50	6.2	13.9
2/8'	1143	120		1.20	0.48	10.0	934.65	102	93	367	320		51	5.8	14.3
			-15.6	1.149	0.467		47.32	89.7		358				6.1	14.1

Sample Train Leak Checks: Pre Test 0 ft^3 @ 10 in. Hg; Post Test 0 ft^3 @ 11 in. Hg

Pitot Tube Leak Checks: PreTest 0 @ 6 in. H_2O; Post Test 0 @ 6 in. H_2O

CONSOL ENERGY.

NOTE: Purge for 10 minutes at end of sampling.

1145

ONTARIO HYDRO Hg SAMPLING AND SPECIATION FIELD DATA SHEET

TEST ID	FIVE	METER BOX	N2	CAL. DATA: delta H	2.012	Comments: * = Ground fault trip @ 42.8 min	
PLANT	Plant 3	PITOT TUBE DESC	E-2	Y	0.966		
LOCATION	Unit 2 FGD Inlet	PROBE LENGTH [ft]	10	C(p)	0.837		
DATE	6/9/05	NOZZLE ID [inch]	5/16B 0.312	FILTER BOX SETTING	NA		
OPERATOR(S)	JAW	%H_2O (Assumed)	9	PROBE HTR SETTING	325		
AMBIENT TEMP [°F]	85	FILTER ID	6	DUCT X-SECTION	circ ?	rect ?	other:
BAR. PRESS. [" Hg]	29.34	K FACTOR	6.55	DUCT DIMENSIONS	22' x 28'6"	DUCT AREA	

TRAVERSE POINT [port-inch]	CLOCK TIME (24-hr)	SAMPLE TIME [minute]	STATIC PRES [" H_2O]	PITOT HEAD [" H_2O]	METER DIFF PRESSURE [" H_2O]	METER VACUUM [" Hg]	METER READING [ft^3]	METER TEMP [oF] inlet	METER TEMP [oF] outlet	STACK TEMP [°F]	PROBE TEMP [°F]	FILTER BOX [°F]	LAST IMP TEMP [°F]	METER EXHAUST O_2 [% vol]	METER EXHAUST CO_2 [% vol]	
	09:35	0					109.40									O_2 meter calib. check
	09:45	10	7.75	0.30	2.00	6.0	117.03	79	75	355	324		50	6.7	13.5	
	09:55	20	7.54	0.29	1.90	6.0	124.60	83	77	353	325		49	6.9	13.3	
	10:05	30	7.65	0.28	1.85	6.0	132.05	84	78	354	331		47	6.1	14.0	20.7 Recal
	10:15	40	7.65	0.25	1.65	5.5	139.11	85	79	354	325		48	6.0	14.1	
*	10:30	50	7.72	0.28	1.85	6.0	146.54	83	79	354	324		50	6.4	13.8	
	10:40	60	7.72	0.29	1.90	6.5	154.06	84	80	354	319		49	6.3	13.9	20.8 OK
	10:50	70	7.46	0.31	2.05	7.0	161.87	86	81	355	330		51	6.1	14.0	
	11:00	80	7.65	0.28	1.85	7.0	169.36	87	81	354	325		53	6.6	13.6	
	11:10	90	7.73	0.27	1.75	6.5	176.63	86	81	354	319		52	6.7	13.5	21.1 Recal
	11:20	100	7.60	0.26	1.70	6.5	183.74	85	81	354	328		49	6.5	13.7	
	11:30	110	7.89	0.28	1.85	7.0	191.14	86	81	355	331		49	7.1	13.1	
	11:40	120	7.82	0.26	1.70	7.0	198.38	88	82	355	319		50	6.4	13.8	
				RMS										6.48		
			7.68	0.279	1.84		88.98		82.1	354.3				~~6.48~~	13.69	

Sample Train Pre Test leak chk, ft^3 @ 12 in. Hg — Pitot Tube PreTest OK @ 6 in. H_2O

Leak Checks: Post Test leak chk, ft^3 @ 10 in. Hg — Leak Checks: Post Test OK @ 8 in. H_2O

CONSOLENERGY

Post-test air purge for 10 min @ ΔH = 1.0

NOTE: Purge for 10 minutes at end of sampling.

123

ONTARIO HYDRO Hg SAMPLING AND SPECIATION FIELD DATA SHEET

TEST ID	#5	METER BOX	N5	CAL. DATA: delta H	
PLANT	Plant 3	PITOT TUBE DESC		Y	
LOCATION	Unit 2 Stack	PROBE LENGTH [ft]	6	C(p)	
DATE	6/9/05	NOZZLE ID [inch]	5/32	FILTER BOX SETTING	
OPERATOR(S)	KC/LR	$\%H_2O$ (Assumed)		PROBE HTR SETTING	
AMBIENT TEMP [°F]	89	FILTER ID	#5	DUCT X-SECTION	circ ? / rect ? / other:
BAR. PRESS. [" Hg]	29.34	K FACTOR	0.484	DUCT DIMENSIONS	19 ft / DUCT AREA

Comments:

TRAVERSE POINT [port-inch]	CLOCK TIME (24-hr)	SAMPLE TIME [minute]	STATIC PRES [" H_2O]	PITOT HEAD [" H_2O]	METER DIFF PRESSURE [" H_2O]	METER VACUUM [" Hg]	METER READING [ft^3]	METER TEMP [oF] inlet	METER TEMP [oF] outlet	STACK TEMP [°F]	PROBE TEMP [°F]	FILTER BOX [°F]	LAST IMP TEMP [°F]	METER EXHAUST O_2 [% vol]	METER EXHAUST CO_2 [% vol]
	09:35	0					949.18								
	09:45	10	-1.30	2.50	1.28	4.0	955.30	90	89	136	246	325	52	7.0	13.2
	09:55	20		2.50	1.26	4.0	960.94	92	88	137	246	325	49	6.1	14.0
	10:05	30	-1.50	3.1	1.48	4.5	967.20	94	89	137	248	326	52	6.6	13.6
	10:15			3.1	1.48	4.5	973.47	95	89	137	248	326	54	6.6	13.6
	10:25	40	-1.60	3.3	1.58	5.0	980.02	96	90	138	247	325	54	6.3	13.8
	10:35	50		3.2	1.52	5.0	986.59	97	89	137	248	325	53	6.4	13.8
	10:45	60	-1.60	3.3	1.58	5.0	993.19	98	90	137	248	327	55	6.5	13.6
	10:55			3.3	1.58	5.0	999.78	98	89	138	248	326	57	7.1	13.2
	11:05	70	-1.50	3.1	1.48	5.0	006.27	99	89	137	248	327	60	6.6	13.6
	11:15	80		3.1	1.48	5.0	012.75	99	89	137	249	326	60	6.7	13.6
	11:25	90	~~2.~~	2.70	1.30	4.5	018.95	99	89	137	246	326	60	6.8	13.4
	11:35		-1.40	~~2.80~~	~~1.35~~	4.5	025.04	99	90	137	247	325	62	7.1	13.1
		100		OK											
		110													
		120		RMS											
			-1.48	2.993	1.44		75.86	92.8		137.1				6.7	13.5

Sample Train Leak Checks: Pre Test <0.01 ft^3 @ 7 in. Hg; Post Test <0.01 ft^3 @ 7 in. Hg

Pitot Tube Leak Checks: PreTest <0.01 @ 5 in. H_2O; Post Test <0.01 @ 5 in. H_2O

CONSOLENERGY

NOTE: Purge for 10 minutes at end of sampling.

303.2

ONTARIO HYDRO Hg SAMPLING AND SPECIATION FIELD DATA SHEET

TEST ID	SCRI-6	METER BOX	N-3	CAL. DATA: delta H	1.982
PLANT	Plant 3	PITOT TUBE DESC		Y	1.026
LOCATION	Unit 2 SCR Inlet	PROBE LENGTH [ft]	12	C(p)	
DATE	6-9-05	NOZZLE ID [inch]		FILTER BOX SETTING	NA
OPERATOR(S)	JC	%H_2O (Assumed)	10	PROBE HTR SETTING	325
AMBIENT TEMP [°F]	89	FILTER ID	24-23	DUCT X-SECTION	circ ? rect ? other:
BAR. PRESS. [" Hg]	29.34	K FACTOR	1.00	DUCT DIMENSIONS	9'4"x78' DUCT AREA

Comments: 1456 - Stop for filter change
1506 - restart

TRAVERSE POINT [port-inch]	CLOCK TIME (24-hr)	SAMPLE TIME [minute]	STATIC PRES [" H_2O]	PITOT HEAD [" H_2O]	METER DIFF PRESSURE [" H_2O]	METER VACUUM [" Hg]	METER READING [ft^3]	METER TEMP [oF] inlet	METER TEMP [oF] outlet	STACK TEMP [°F]	PROBE TEMP [°F]	FILTER BOX [°F]	LAST IMP TEMP [°F]	METER EXHAUST O_2 [% vol]	METER EXHAUST CO_2 [% vol]
	1356	0					38.000								
A-6-1	1406	10		0.45	0.45	4.0	391.770	98	97	713	316	NA	66		
	1416	20	-6.36	0.53	0.53	6.0	395.575	99	98	713	330		59	3.4	16.6
	1426	30		0.50	0.50	7.0	399.300	99	98	714	332		57		
A-B-2	1436	40	-6.47	0.47	0.47	9.0	402.96	98	97	713	331		57	3.8	16.3
	1446	50		0.47	0.47	11.0	406.600	99	98	717	333		58		
	1456	60	-6.25	0.47	0.47	14.0	410.665	95	95	715	329		57	3.7	16.3
A-B-3	1516	70		0.35	0.35	4.5	410.713 414.07	96	96	713	329		68		
	1526	80	-6.30	0.35	0.35	5.0	417.218	96	95	715	325		54	4.2	15.9
	1536	90		0.35	0.35	6.0	420.46	97	96	718	329		51		
	1546	100	-6.60	0.35	0.35	6.5	423.67	98	96	718	325		51	3.9	16.1
	1556	110		0.35	0.35	7.0	426.87	99	98	720	328		52		
	1606	120	-6.31	0.35	0.35	8.0	430.030	102	99	721	332		55	3.2	16.8
			-6.38	0.413	0.416		41.882	97.5		715.8				3.7	16.3

Sample Train Leak Checks: Pre Test 0.000 ft^3 @ 10 in. Hg; Post Test _____ ft^3 @ _____ in. Hg

Pitot Tube Leak Checks: PreTest OK @ 7 in. H_2O; Post Test _____ @ _____ in. H_2O

CONSOLENERGY

NOTE: Purge for 10 minutes at end of sampling.

113.7

ONTARIO HYDRO Hg SAMPLING AND SPECIATION FIELD DATA SHEET

TEST ID	SCRO - 6	METER BOX	1	CAL. DATA: delta H	1.976
PLANT	Plant 3	PITOT TUBE DESC		Y	0.987
LOCATION	Unit 2 SCR Outlet	PROBE LENGTH [ft]	10'	C(p)	
DATE	6/9/05	NOZZLE ID [inch]		FILTER BOX SETTING	NA
OPERATOR(S)	RLO & BPS	%H_2O (Assumed)		PROBE HTR SETTING	330
AMBIENT TEMP [°F]	~90°	FILTER ID	31 & 32	DUCT X-SECTION	circ ? rect ? other:
BAR. PRESS. [" Hg]	29.34	K FACTOR	0.55	DUCT DIMENSIONS	11' x 32' DUCT AREA

Comments:

TRAVERSE POINT [port-inch]	CLOCK TIME (24-hr)	SAMPLE TIME [minute]	STATIC PRES [" H_2O]	PITOT HEAD [" H_2O]	METER DIFF PRESSURE [" H_2O]	METER VACUUM [" Hg]	METER READING [ft^3]	METER TEMP [oF] inlet	METER TEMP [oF] outlet	STACK TEMP [°F]	PROBE TEMP [°F]	FILTER BOX [°F]	LAST IMP TEMP [°F]	METER EXHAUST O_2 [% vol]	METER EXHAUST CO_2 [% vol]
	1340	0					560.20								
STOP	1350	10	-10.9	1.30	.71	6.5	564.90	.95	.93	.713	329	—	57	4.0	—
START	1359	20	—	1.30	.71	10	569.60	.99	.94	.704	329		57	3.2	
STOP	1419	30	-9.21	1.30	.71	15	574.30	.102	.96	.702	330		61	3.0	
START	1505	40	—	1.40	.76	6	574.45 / 579.37	.104	.99	.697	329		58	3.9	
		50	-9.47	1.40	.76	8	584.18	.106	.100	.698	329		60	3.6	
		60	—	1.40	.76	11	589.03	.108	.101	.697	328		62	4.0	
		70	-9.80	1.20	.66	13	593.60	108	.102	.697	327		66	3.4	
STOP	1555	80	—	1.20	.66	16	598.15	108	103	698	328		68	3.7	
		90													
		100													
		110													
		120													
				1.311											
				RMS			37.80								
			-9.35	~~1.115~~	0.716		~~37.98~~	101.1		700.8				3.6	

Sample Train Leak Checks: Pre Test OK ft^3 @ 10 in. Hg; Post Test OK ft^3 @ 16 in. Hg

Pitot Tube Leak Checks: PreTest OK @ 7 in. H_2O; Post Test OK @ 7 in. H_2O

CONSOLENERGY

NOTE: Purge for 10 minutes at end of sampling.

95.9

ONTARIO HYDRO Hg SAMPLING AND SPECIATION FIELD DATA SHEET

TEST ID	6	METER BOX	N-4	CAL. DATA: delta H	1.983
PLANT	Plant 3	PITOT TUBE DESC	E-5	Y	0.960
LOCATION	Unit 2 Air Heater Outlet	PROBE LENGTH [ft]	10	C(p)	
DATE	6/9/05	NOZZLE ID [inch]	5/32" B, 0.158"	FILTER BOX SETTING	—
OPERATOR(S)	GLC/ST	%H_2O (Assumed)		PROBE HTR SETTING	325
AMBIENT TEMP [°F]	95	FILTER ID	18	DUCT X-SECTION	circ ? rect ? other:
BAR. PRESS. [" Hg]	29.34	K FACTOR	0.406	DUCT DIMENSIONS	16' x 12' DUCT AREA

Comments: STOPPED @ 1350, RESUMED TESTING @ 1358 STOPPED to CHANGE PORTS @1448; RESUMED @ 1507

TRAVERSE POINT [port-inch]	CLOCK TIME (24-hr)	SAMPLE TIME [minute]	STATIC PRES [" H_2O]	PITOT HEAD [" H_2O]	METER DIFF PRESSURE [" H_2O]	METER VACUUM [" Hg]	METER READING [ft^3]	METER TEMP [oF] ⑥ inlet	METER TEMP [oF] ⑦ outlet	STACK TEMP [°F] ①	PROBE TEMP [°F] ②	FILTER BOX [°F]	LAST IMP TEMP [°F] ④	METER EXHAUST O_2 [% vol]	METER EXHAUST CO_2 [% vol]
	1340	0					940.00								
4/2'	1350	10		1.40	0.56	5.0	944.36	98	96	351	315		63	7.4	12.8
4/2'	1408	20		1.20	0.48	5.0	948.45	101	97	347	320		60	6.7	13.4
4/5'	1418	30	-14.0	0.98	0.39	5.0	952.16	104	98	344	320		59	6.5	13.6
4/5'	1428	40		0.96	0.39	5.0	955.83	105	99	343	316		58	6.4	13.7
4/8'	1438	50	-14.23	0.79	0.32	6.0	959.23	105	100	336	320		59	6.4	13.7
4/8'	1448	60		0.76	0.31	6.0	962.54	106	100	341	321		60	6.6	13.6
					LEAK CHECK OK → 0 @ 10" Hg										
	1507						962.90								
2/2'	1517	70		1.25	0.50	5.0	967.07	106	102	368	321		63	6.8	13.4
2/2'	1527	80		1.25	0.50	5.5	971.20	108	102	367	319		57	6.0	14.1
2/5'	1537	90	-14.3	1.20	0.48	6.0	975.23	109	102	368	317		56	5.7	14.4
2/5'	1547	100		1.20	0.48	7.0	979.30	110	103	368	322		57	5.6	14.5
2/8'	1557	110	-14.23	1.15	0.46	8.0	983.27	111	104	368	324		58	5.4	14.7
2/8'	1607	120		1.15	0.46	9.0	987.23	112	105	368	325		59	5.7	14.4
				RMS											
			-14.2	1.099	0.44		46.81	103.5		355.8				6.3	13.8

Sample Train Leak Checks: Pre Test 0 ft^3 @ 10 in. Hg; Post Test 0 ft^3 @ 11 in. Hg

Pitot Tube Leak Checks: PreTest 0 @ 6 in. H_2O; Post Test 0 @ 6 in. H_2O

CONSOL ENERGY

NOTE: Purge for 10 minutes at end of sampling.

10810

ONTARIO HYDRO Hg SAMPLING AND SPECIATION FIELD DATA SHEET

TEST ID	SIX	METER BOX	N2	CAL. DATA: delta H	2.012
PLANT	Plant 3	PITOT TUBE DESC	Fc-2	Y	0.966
LOCATION	Unit 2 FGD Inlet	PROBE LENGTH [ft]	10	C(p)	0.837
DATE	6/9/05	NOZZLE ID [inch]	5/16 B 0.312	FILTER BOX SETTING	N4
OPERATOR(S)	JAW	%H_2O (Assumed)	9	PROBE HTR SETTING	325
AMBIENT TEMP [°F]	88	FILTER ID	7	DUCT X-SECTION	circ ? rect ? other:
BAR. PRESS. [" Hg]	29.34	K FACTOR	6.6	DUCT DIMENSIONS	22' x 28'6" DUCT AREA

Comments: • Sampling suspended from 13:50 to 13:58 while SCR in location fixed problem
• Sampling suspended from 14:46 to 15:05 while SCR out fixed problem

TRAVERSE POINT [port-inch]	CLOCK TIME (24-hr)	SAMPLE TIME [minute]	STATIC PRES [" H_2O]	PITOT HEAD [" H_2O]	METER DIFF PRESSURE [" H_2O]	METER VACUUM [" Hg]	METER READING [ft^3]	METER TEMP [oF] inlet	METER TEMP [oF] outlet	STACK TEMP [°F]	PROBE TEMP [°F]	FILTER BOX [°F]	LAST IMP TEMP [°F]	METER EXHAUST O_2 [% vol]	METER EXHAUST CO_2 [% vol]	Do meter calib. check
	13:40	0					206.80									
	13:50	10	8.39	0.28	1.85	5.0	214.38	87	84	359	325		51	7.2	13.0	
13:58	14:08	20	7.33	0.25	1.65	5.0	221.53	89	86	355	332		47	7.2	13.0	
	14:18	30	7.03	0.27	1.80	5.0	228.83	92	87	353	319		48	6.6	13.6	20.8 OK
	14:28	40	7.04	0.25	1.65	5.0	235.98	92	87	351	318		50	6.4	13.7	
	14:38	50	7.21	0.24	1.60	5.0	243.05	91	87	350	320		52	6.9	13.3	
	14:48	60	7.36	0.24	1.60	5.0	250.01	91	87	350	321		50	6.9	13.3	20.9 OK
15:05	15:15	70	7.28	0.28	1.85	5.5	257.50	91	88	353	332		46	6.9	13.3	
	15:25	80	7.49	0.27	1.80	5.5	264.93	92	88	354	327		49	7.2	13.0	
	15:35	90	7.52	0.28	1.85	6.0	272.39	92	88	355	329		50	6.9	13.3	21.2 Recal
	15:45	100	7.45	0.28	1.85	6.0	279.90	92	88	355	319		51	6.5	13.7	
	15:55	110	7.40	0.27	1.80	6.5	287.35	92	88	354	319		54	6.5	13.7	
	16:05	120	7.30	0.27	1.80	6.5	294.75	93	88	355	323		55	6.6	13.6	
				RPD												
			7.40	0.265	1.76		87.95		89.2	353.7				6.82	13.38	

Sample Train Leak Checks: Pre Test leak stop ft^3 @ 12 in. Hg; Post Test leak stop ft^3 @ 10 in. Hg

Pitot Tube Leak Checks: PreTest OK @ 6 in. H_2O; Post Test OK @ 7 in. H_2O

CONSOLENERGY.

Air Purge for 10 min @ ΔH = 1.0

NOTE: Purge for 10 minutes at end of sampling.

1694

ONTARIO HYDRO Hg SAMPLING AND SPECIATION FIELD DATA SHEET

TEST ID	#6	METER BOX	N5	CAL. DATA: delta H	
PLANT	Plant 3	PITOT TUBE DESC		Y	
LOCATION	Unit 2 Stack	PROBE LENGTH [ft]	6	C(p)	
DATE	6/9/05	NOZZLE ID [inch]	5/32	FILTER BOX SETTING	
OPERATOR(S)	KC/LK	%H_2O (Assumed)	1	PROBE HTR SETTING	
AMBIENT TEMP [°F]	93°	FILTER ID	#6	DUCT X-SECTION	circ ? / rect ? / other:
BAR. PRESS. [" Hg]	29.34	K FACTOR	0.484	DUCT DIMENSIONS	19 ft / DUCT AREA

Comments: Stopped test @ 13:56
Resumed @ 14:15
Stopped @ 14:55
Resumed @ ~~15:15~~ 15:05

TRAVERSE POINT [port-inch]	CLOCK TIME (24-hr)	SAMPLE TIME [minute]	STATIC PRES [" H_2O]	PITOT HEAD [" H_2O]	METER DIFF PRESSURE [" H_2O]	METER VACUUM [" Hg]	METER READING [ft^3]	METER TEMP [oF] inlet	METER TEMP [oF] outlet	STACK TEMP [°F]	PROBE TEMP [°F]	FILTER BOX [°F]	LAST IMP TEMP [°F]	METER EXHAUST O_2 [% vol]	METER EXHAUST CO_2 [% vol]
	13:40	0					31.90								
PORT A	13:50	10	-1.10	2.4	1.18	4.0	37.765	94	93	137	248	327	58	7.1	13.0
	14:15	20		2.8	1.35	4.5	43.83	96	93	137	247	326	55	6.9	13.2
	14:25	30	-1.40	2.9	1.40	4.5	50.40	99	93	137	248	325	55	6.5	13.7
				2.2	~~1.07~~		50.46								
	1435	40		2.2	1.07	3.5	55.96	99	93	137	247	326	57	6.9	13.3
	14:45	50	-1.05	2.2	1.07	3.5	61.46	100	93	136	245	327	57	6.3	13.8
	14:55	60	-1.20	2.7	1.30	4.0	67.42	101	94	137	247	327	58	6.3	13.7
PORT B	15:15			2.7	1.30	4.0	73.35	99	93	137	246	325	58	6.6	13.6
	15:25	70	-1.30	2.9	1.40	4.5	79.60	102	93	138	248	325	52	6.8	13.3
	15:35	80	-1.30	2.9	1.40	5.0	85.88	102	93	137	246	325	52	6.9	13.3
		90					86.04	~~102~~	~~94~~	~~137~~	~~249~~	~~326~~	~~54~~	~~6.7~~	~~13.5~~
	15:45		-0.97	2.2	1.07	4.0	91.70	102	94	137	249	326	54	6.7	13.5
	15:55	100	-1.10	2.50	1.20	4.0	97.49	102	93	137	248	326	55	6.5	13.6
PORT C	16:05	110	-1.10	2.50	1.20	4.0	103.28	102	93	137	248	325	58	6.7	13.5
		120		RUS											
			-1.17	2.51	1.25		71.16	96.5		137				6.7	13.5

Sample Train Pre Test _____ ft^3 @ _____ in. Hg
Leak Checks: Post Test _____ ft^3 @ _____ in. Hg

Pitot Tube PreTest _____ @ _____ in. H_2O
Leak Checks: Post Test _____ @ _____ in. H_2O

CONSOL ENERGY.

NOTE: Purge for 10 minutes at end of sampling.

2824

Axial Flow Check

Location	SCR In	Duct Ht, "		Barometric	
Date		Duct ID,"		Static	-7.60 / -7.30
Time		Duct Area	ft^2	Dry Bulb	
Tube I.D.		% O_2		Wet Bulb	
C-Factor		% CO_2		% H_2O	
Operator(s)		% N_2		W.M.Wt	

Port depth 72"

N-3

SCR In

Y = 1.026

Alt = 1.982

SCR out

Port depth 52"

N-1

Y-0.987

Alt @ 1.976

E-15 0.833

Ideal 0.168

~~3/32 E = 0.158~~

~~K = 0.93~~

3/16 E = 0.183

K = 0.594

PORT/ POINT	DISTANCE [" From Wall]	TEMP [°F]	DELTA P [" H_2O]	VELOCITY [Ft/Sec]	Null Angle
B-1		735	0.68		
B-2		742	0.63	0.63	
B-3		747	0.52		
A-1		735	0.72		
A-2		740	0.73		
A-3	E-3 0.816	749	0.59		
	7/32 E 0.214				
	K = 1.00				
1					
		578	1.43		-11.70
Average					
Maximum					
Minimum					
SDEV					

DATA SUMMARY	
Velocity, [fps]	
acfm	
scfm	
dscfm	
Ex Air Free cfm	
Est. MM Btu/hr Heat Input	
Est. Firing Rate, lb/hr	

Axial Flow Check

Location	AHO	Duct Ht, "		Barometric	29.33
Date		Duct ID,"		Static	
Time		Duct Area	ft^2	Dry Bulb	
Tube I.D.		% O_2		Wet Bulb	
C-Factor		% CO_2		% H_2O	
Operator(s)		% N_2		W.M.Wt	

AHO

PORT/ POINT	DISTANCE [" From Wall]	TEMP [°F]	DELTA P [" H_2O]	VELOCITY [Ft/Sec]	Null Angle
B-1		368	1.55		-17.5
B-2		370	1.40		
B-3		366	1.46		
D-1		350	1.59		-17.5
D-2		350	1.27		
D-3		340	1.10		
		357	1.40		
Average					
Maximum					
Minimum					
SDEV					

N-2

DATA SUMMARY	
Velocity, [fps]	
acfm	
scfm	
dscfm	
Ex Air Free cfm	
Est. MM Btu/hr Heat Input	
Est. Firing Rate, lb/hr	

N-4
y=0.960
ΔH@=1.983
ES=0.832
5/32 B=0.158
K=0.406

Axial Flow Check

Location	FGD in	Duct Ht, "		Barometric	
Date	6/6/05	Duct ID,"		Static	+ 8.45
Time	5550	Duct Area	ft^2	Dry Bulb	
Tube I.D.	5-19	% O_2		Wet Bulb	
C-Factor		% CO_2		% H_20	
Operator(s)	JMW GLK	% N_2		W.M.Wt	

PORT/ POINT	DISTANCE [" From Wall]	TEMP [°F]	DELTA P [" H_2O]	VELOCITY [Ft/Sec]	Null Angle
1B#4	10'		0.30		
Average					
Maximum					
Minimum					
SDEV					

DATA SUMMARY	
Velocity, [fps]	
acfm	
scfm	
dscfm	
Ex Air Free cfm	
Est. MM Btu/hr Heat Input	
Est. Firing Rate, lb/hr	

N-2
Y=0.966
ΔHe=2.012
E2=0.837
5/16E=0.309
K=6.75

Axial Flow Check

Location	Stack	Duct Ht, "		Barometric	29.33
Date	6/6/05	Duct ID,"		Static	
Time	17:00	Duct Area	ft²	Dry Bulb	
Tube I.D.		% O_2		Wet Bulb	
C-Factor		% CO_2		% H_2O	
Operator(s)	KC/SWR	% N_2		W.M.Wt	

Static	PORT/ POINT	DISTANCE [" From Wall]	TEMP [°F]	DELTA P [" H_2O]	VELOCITY [Ft/Sec]	Null Angle
-1.72	A	16.0	127		2.630	
		39.3	127		2.974	
		73.5	128		3.202	
	D	16.0	127		~~3.031~~ → 2.331	
-1.64		39.3	127		3.031	
		73.5	128		2.980	
	C	16.0	127		2.650	
-1.78		39.3	128		3.58	
		73.5	126		3.43	
-1.84	B	16.0	128		2.81	
		39.3	127		3.15	
		73.5	127		3.40	
-1.75	Average		127		3.01	
	Maximum					
	Minimum					
	SDEV					

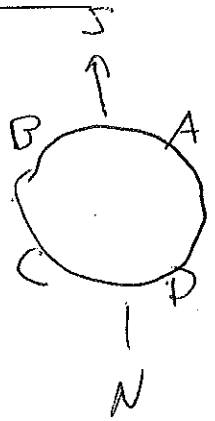

Probe S53
Meter Box
#-5
Y = 1.011
ΔH = 2.015
Cal Date 11/2/05

DATA SUMMARY	
Velocity, [fps]	
acfm	
scfm	
dscfm	
Ex Air Free cfm	
Est. MM Btu/hr Heat Input	
Est. Firing Rate, lb/hr	

16.0
39.3
73.5
E-1 0.838
5/32 A = ~~0.155~~
K = 0.517

Location		SCR Inlet Unit 2	SCR Out Unit 2	AirHtr Out Unit 2	FGD Inlet Unit 2	Stack Unit 2	SCR Inlet Unit 2	SCR Out Unit 2	AirHtr Out Unit 2	FGD Inlet Unit 2	Stack Unit 2
Date		06/07/2005	06/07/2005	06/07/2005	06/07/2005	06/07/2005	06/07/2005	06/07/2005	06/07/2005	06/07/2005	06/07/2005
Start Time		1220	1220	1220	1220	1220	1705	1705	1705	1705	1705
Stop Time		1437	1426	1454	1420	1420	1915	1847	1913	1905	1905
Test Number		SCRI-1	SCRO-1	AHO-1	FGD-1	STK-1	SCRI-2	SCRO-2	AHO-2	FGD-2	STK-2
Sample Type		OH-Hg	OH-Hg	OH-Hg	OH-Hg	OH-Hg	OH-Hg	OH-Hg	OH-Hg	OH-Hg	OH-Hg
Y factor of dry gas meter	-	1.026	0.987	0.960	0.966	1.011	1.026	0.987	0.960	0.966	1.011
Gas Volume	- ft^3	44.13	48.89	46.87	91.98	81.10	43.23	42.22	48.44	91.03	81.90
Delta H of dry gas meter	- " H_2O	0.50	0.78	0.50	1.90	1.61	0.50	0.78	0.47	1.88	1.55
Meter Temperature	- °F	110.2	107.0	107.8	103.0	100.8	104.9	112.3	109.4	96.1	103.3
C Factor of pitot tube	-	0.846	0.838	0.832	0.837	0.833	0.846	0.838	0.832	0.837	0.833
Nozzle Diameter	- inches	0.214	0.183	0.158	0.309	0.155	0.214	0.183	0.158	0.312	0.155
A n (area of nozzle)	- ft^2	0.00025	0.00018	0.00014	0.00052	0.00013	0.00025	0.00018	0.00014	0.00053	0.00013
Area of Stack (Single of Dual)	- ft^2	727.7	704.0	384.0	627.0	283.5	727.7	704.0	384.0	627.0	283.5
H_2O Weight	- gm	101.3	110.3	103.0	176.1	308.4	101.3	85.9	96.7	170.3	310.9
Sample Time	- minutes	120	100	120	120	120	120	85	120	120	120
Barometric Pressure	- " Hg	29.37	29.37	29.37	29.37	29.37	29.29	29.29	29.29	29.29	29.29
Static Pressure	- " H_2O	-7.30	-10.80	-13.00	8.58	-1.30	-7.76	-11.10	-16.70	8.42	-1.23
% Oxygen	-	4.1	3.8	6.6	6.8	6.9	4.3	4.0	6.5	6.8	6.7
% Carbon Dioxide	-	15.9	16.2	13.6	13.4	13.3	15.8	16.0	13.7	13.4	13.5
% N_2 + CO	-	80.0	80.0	79.8	79.8	79.8	79.9	80.0	79.8	79.8	79.8
Stack Temp (Dry Bulb)	- °F	729	714	358	355	137	732	715	358	354	136
Stack Temp (Wet Bulb)	- °F	729.2	714.2	358.1	354.8	136.5	732.4	715.1	357.5	354.3	135.8
"S" sample (rms vel head)	- " H_2O	0.497	1.300	1.224	0.272	3.170	0.497	1.300	1.171	0.277	3.040
Dust Wt.	- gm	9.9546	6.9256	1.1440	0.0162	0.0209	11.4581	4.9098	4.6688	0.0329	0.0192
Sample Volume	- DSCF	41.19	44.18	41.11	82.15	76.05	40.62	37.69	42.25	82.08	76.24
Sample Volume	- dscm	1.167	1.251	1.164	2.327	2.154	1.150	1.068	1.196	2.325	2.159
ABS ST PRES	- " Hg	28.83	28.58	28.41	30.00	29.27	28.72	28.47	28.06	29.91	29.20
ABS ST TEMP	- °R	1189	1174	818	815	597	1192	1175	818	814	596
H_2O - % by Vol	- vapor	10.4	10.5	10.6	9.2	16.0	10.5	9.7	9.7	8.9	16.1
Water Volume	- std ft^3	4.77	5.20	4.85	8.29	14.53	4.77	4.05	4.55	8.02	14.64
Dry Molecular Weight	- lb/lb-mole	30.71	30.74	30.44	30.42	30.40	30.70	30.72	30.45	30.42	30.43
Wet Molecular Weight	- lb/lb-mole	29.39	29.40	29.13	29.28	28.41	29.37	29.49	29.24	29.31	28.43
% EXCESS AIR	-	24.1	21.9	45.6	47.4	48.5	25.6	23.3	44.6	47.8	46.7
Dry Mole Frac.	-	0.896	0.895	0.894	0.908	0.840	0.895	0.903	0.903	0.911	0.839
Wet Mole Frac.	-	0.104	0.105	0.106	0.092	0.160	0.105	0.097	0.097	0.089	0.161
Gas Velocity, Direct	- ft/sec	60.40	96.56	78.24	35.94	107.37	60.63	96.63	76.83	36.30	105.20
ACFM	-	2,637,428	4,078,777	1,802,608	1,352,202	1,826,561	2,647,275	4,081,844	1,770,082	1,365,444	1,789,583
SCFM	-	1,128,474	1,751,701	1,104,845	878,612	1,581,919	1,125,188	1,745,419	1,072,254	885,045	1,547,747
DSCFM	-	1,011,336	1,567,383	988,218	798,040	1,328,231	1,006,916	1,576,236	967,905	806,257	1,298,378
DSCFM (rounded)		1,011,300	1,567,400	988,200	798,000	1,328,200	1,006,900	1,576,200	967,900	806,300	1,298,400
DSCMM		28,641	44,388	27,986	22,600	37,616	28,516	44,639	27,411	22,833	36,770
Stack Based DSCMM		31,391	30,840	36,879	37,349	37,616	31,432	30,856	36,234	37,031	36,770
Excess Air Free DSCFM	-	812,940	1,282,404	676,149	539,154	890,995	799,752	1,275,318	666,882	543,549	881,530
CALCULATED FIRING RATE:											
Dry	- lb/min	6,500	10,253	5,406	4,311	7,124	6,341	10,112	5,288	4,310	6,990
Wet	- lb/min	7,452	11,756	6,198	4,942	8,168	7,278	11,605	6,069	4,946	8,022
Dry	- lb/hr	389,989	615,204	324,367	258,647	427,435	380,466	606,707	317,256	258,582	419,370
Wet	- lb/hr	447,133	705,347	371,895	296,545	490,065	436,664	696,324	364,117	296,778	481,316
CALCULATED FIRING RATE:											
Dry	- tons/hr	195.0	307.6	162.2	129.3	213.7	190.2	303.4	158.6	129.3	209.7
Wet	- tons/hr	223.6	352.7	185.9	148.3	245.0	218.3	348.2	182.1	148.4	240.7
HEAT INPUT:											
MM Btu/hr	-	5,053	7,971	4,202	3,351	5,538	4,926	7,855	4,108	3,348	5,430
PARTICULATE LOADING:											
Grains/DSCF	-	3.7287	2.4189	0.4294	0.0030	0.0042	4.3525	2.0098	1.7052	0.0062	0.0039
lb/hr	-	32333	32509	3639	21	48.29	37577.6	27163	14152	43	43.26
lb/MM Btu	-	6.40	4.08	0.87	0.01	0.01	7.63	3.46	3.45	0.01	0.01
Ash Production	lb/hr	40,598	64,043	33,767	26,925	44,496	39,340	62,734	32,804	26,737	43,363
Bagouse Ash		32333	32509	3639	21	48.29	37578	27163	14152	43	43.26
Bottom Ash		8,265	31,533	30,128	26,904	44,448	1,763	35,571	18,652	26,695	43,320
Percent Fly Ash		79.6%	50.8%	10.8%	0.1%	0.1%	95.5%	43.3%	43.1%	0.2%	0.1%
% ISOKINETIC	-	99.0	108.8	97.9	103.4	103.4	98.1	108.6	102.7	100.3	106.0

Location	SCR Inlet Unit 2	SCR Out Unit 2	AirHtr Out Unit 2	FGD Inlet Unit 2	Stack Unit 2	SCR Inlet Unit 2	SCR Out Unit 2	AirHtr Out Unit 2	FGD Inlet Unit 2	Stack Unit 2
Date	06/07/2005	06/07/2005	06/07/2005	06/07/2005	06/07/2005	06/07/2005	06/07/2005	06/07/2005	06/07/2005	06/07/2005
Start Time	1220	1220	1220	1220	1220	1705	1705	1705	1705	1705
Stop Time	1437	1426	1454	1420	1420	1915	1847	1913	1905	1905
Test Number	SCRI-1	SCRO-1	AHO-1	FGD-1	STK-1	SCRI-2	SCRO-2	AHO-2	FGD-2	STK-2
Sample Type	OH-Hg	OH-Hg	OH-Hg	OH-Hg	OH-Hg	OH-Hg	OH-Hg	OH-Hg	OH-Hg	OH-Hg
Impinger Components Wts & Volumes	06/07/2005	06/07/2005	06/07/2005	06/07/2005	06/07/2005	06/07/2005	06/07/2005	06/07/2005	06/07/2005	06/07/2005
Filter Wt., g	9.9546	6.9256	1.1440	0.0162	0.0209	11.4581	4.9098	4.6688	0.0329	0.0192
ppb Hg or ng/filter	<0.004	<0.004	0.064	67.9	14.30	<0.004	<0.004	0.024	2.3	<5.0
total ug	<3.98E-05	<2.77E-05	7.32E-05	6.79E-02	1.43E-02	<4.58E-05	<1.96E-05	1.12E-04	2.30E-03	5.00E-03
ug/dscm	<3.41E-05	<2.21E-05	6.29E-05	2.92E-02	6.64E-03	<3.98E-05	<1.84E-05	9.37E-05	9.89E-04	2.32E-03
Probe Rinse volume, ml	111	93	174	138	110	109	157	184	130	175
Analytical Hg, ng/ml	<1.0	1.5	<1.0	1.9	12.0	<1.0	<1.0	<1.0	1.4	6.9
ug/dscm	<0.10	0.11	<0.15	0.11	0.61	<0.09	<0.15	<0.15	0.08	0.56
Heated Umbilical Line Rinse volume, ml	95	90	128	150	NA	118	166	117	161	NA
Analytical Hg, ng/ml	<1.0	<1.0	<1.0	<1.0		<1.0	<1.0	<1.0	<1.0	
ug/dscm	<0.08	<0.07	<0.11	<0.06		<0.10	<0.16	<0.10	<0.07	
KCl volume, ml	549	549	561	608	752	545	532	541	612	747
Analytical Hg, ng/ml	19.5	2.7	21.1	40.3	4.0	14.1	4.1	19.4	42.0	<1.8
ug/dscm	9.18	1.18	10.17	10.53	1.40	6.68	2.04	8.77	11.06	<0.62
Nitric/Peroxide volume, ml	175	175	188	174	176	174	175	175	175	181
Analytical Hg, ng/ml	1.1	<1.0	1.5	<1.0	<1.00	2.9	1.8	<1.0	<1.0	<1.00
ug/dscm	0.17	<0.14	0.24	<0.07	<0.08	0.44	0.30	<0.15	<0.08	<0.08
KMnO4 volume, ml	244	245	215	246	241	248	245	247	242	243
Analytical Hg, ng/ml	26.2	57.6	3.8	4.7	11.0	15.1	29.4	3.3	6.6	10.0
ug/dscm	5.48	11.28	0.70	0.50	1.23	3.26	6.75	0.68	0.69	1.13
KMnO4-Acid Rinse volume, ml	100	100	100	100	100	100	100	100	100	100
Analytical Hg, ng/ml	<1.0	<1.0	<1.0	<1.0	<1.0	<1.0	<1.0	<1.0	<1.0	<1.0
ug/dscm	<0.09	<0.08	<0.09	<0.04	<0.05	<0.09	<0.09	<0.08	<0.04	<0.05
As-Measured Concentrations										
Particulate	3.41E-05	2.21E-05	6.29E-05	2.92E-02	6.64E-03	3.98E-05	1.84E-05	9.37E-05	9.89E-04	2.32E-03
Particulate - % of Total	0.00	0.00	0.00	0.26	0.20	0.00	0.00	0.00	0.01	0.09
Oxidized Fraction	9.35	1.37	10.43	10.71	2.01	6.88	2.35	9.02	11.21	1.18
Oxidized - % of Total	62.01	10.63	91.01	94.33	59.54	64.53	24.74	90.83	93.29	48.44
Elemental Fraction	5.73	11.50	1.03	0.61	1.36	3.78	7.14	0.91	0.81	1.26
Elemental - % of Total	37.99	89.37	8.99	5.41	40.27	35.47	75.26	9.17	6.71	51.46
Total ug/m^3	15.08	12.87	11.46	11.35	3.38	10.66	9.48	9.94	12.01	2.44
Stack Flow Based Emissions										
Particulate	1.7857E-05	1.1381E-05	3.8657E-05	1.82E-02	4.16E-03	2.0871E-05	9.4609E-06	5.6558E-05	6.11E-04	1.42E-03
Oxidized Fraction	4.89	0.70	6.41	6.67	1.26	3.60	1.21	5.45	6.92	0.72
Elemental Fraction	3.00	5.91	0.63	0.38	0.85	1.98	3.67	0.55	0.50	0.77
Total mg/sec	7.89	6.61	7.04	7.07	2.12	5.58	4.88	6.00	7.41	1.50

Location		SCR Inlet Unit 2	SCR Out Unit 2	AirHtr Out Unit 2	FGD Inlet Unit 2	Stack Unit 2	SCR Inlet Unit 2	SCR Out Unit 2	AirHtr Out Unit 2	FGD Inlet Unit 2	Stack Unit 2
Date		06/08/2005	06/08/2005	06/08/2005	06/08/2005	06/08/2005	06/08/2005	06/08/2005	06/08/2005	06/08/2005	06/08/2005
Start Time		1025	1025	1025	1025	1025	1436	1437	1437	1437	1435
Stop Time		1225	1225	1225	1225	1225	1626	1633	1643	1637	1635
Test Number		SCRI-3	SCRO-3	AHO-3	FGD-3	STK-3	SCRI-4	SCRO-4	AHO-4	FGD-4	STK-4
Sample Type		OH-Hg	OH-Hg	OH-Hg	OH-Hg	OH-Hg	OH-Hg	OH-Hg	OH-Hg	OH-Hg	OH-Hg
Y factor of dry gas meter	-	1.026	0.987	0.960	0.966	1.011	1.026	0.987	0.960	0.966	1.011
Gas Volume	- ft^3	44.41	40.29	49.08	86.96	82.35	40.11	45.52	49.45	92.99	80.27
Delta H of dry gas meter	- " H_2O	0.50	0.73	0.54	1.58	1.46	0.47	0.73	0.49	1.95	1.49
Meter Temperature	- °F	91.4	96.6	96.3	89.0	96.5	107.5	106.2	112.8	92.9	99.2
C Factor of pitot tube	-	0.846	0.838	0.832	0.837	0.833	0.846	0.838	0.832	0.837	0.833
Nozzle Diameter	- Inches	0.214	0.183	0.158	0.309	0.155	0.214	0.183	0.158	0.312	0.155
A n (area of nozzle)	- ft^2	0.00025	0.00018	0.00014	0.00052	0.00013	0.00025	0.00018	0.00014	0.00053	0.00013
Area of Stack (Single of Dual)	- ft^2	727.7	704.0	384.0	627.0	283.5	727.7	704.0	384.0	627.0	283.5
H_2O Weight	- gm	102.2	107.4	103.9	179.2	318.9	102.0	105.4	102.4	186.3	308.1
Sample Time	- minutes	120	95	120	120	120	110	95	120	120	120
Barometric Pressure	- " Hg	29.32	29.32	29.32	29.32	29.32	29.28	29.28	29.28	29.28	29.28
Static Pressure	- " H_2O	-7.45	-10.90	-16.30	8.41	-1.33	-7.39	-11.04	-16.05	8.50	-1.30
% Oxygen	-	5.2	4.1	7.1	6.8	6.9	4.4	4.2	6.5	6.6	6.9
% Carbon Dioxide	-	14.9	16.1	13.2	13.4	13.3	15.7	15.9	13.6	13.6	13.6
% N_2 + CO	-	79.9	79.8	79.7	79.8	79.8	79.9	79.9	79.9	79.8	79.5
Stack Temp (Dry Bulb)	- °F	731	714	354	355	136	731	718	357	357	136
Stack Temp (Wet Bulb)	- °F	730.6	713.8	354.3	355.4	135.9	731.1	718.4	357.3	357	136.0
"S" sample (rms vel head)	- " H_2O	0.500	1.400	1.232	0.265	3.029	0.470	1.400	1.216	0.290	3.078
Dust Wt.	- gm	9.4202	8.5526	4.8214	filter lost	0.0121	8.9137	8.4228	5.4451	0.0188	0.0880
Sample Volume	- DSCF	42.79	37.02	43.87	79.45	77.66	37.50	41.06	42.86	84.33	75.24
Sample Volume	- dscm	1.212	1.048	1.242	2.250	2.199	1.062	1.163	1.214	2.388	2.131
ABS ST PRES	- " Hg	28.77	28.52	28.12	29.94	29.22	28.74	28.47	28.10	29.91	29.18
ABS ST TEMP	- °R	1191	1174	814	815	596	1191	1178	817	817	596
H_2O - % by Vol	- vapor	10.1	12.0	10.0	9.6	16.2	11.4	10.8	10.1	9.4	16.2
Water Volume	- std ft^3	4.81	5.06	4.89	8.44	15.02	4.80	4.96	4.82	8.77	14.51
Dry Molecular Weight	- lb/lb-mole	30.59	30.74	30.40	30.42	30.40	30.69	30.71	30.44	30.44	30.45
Wet Molecular Weight	- lb/lb-mole	29.32	29.21	29.15	29.22	28.39	29.25	29.34	29.18	29.27	28.44
% EXCESS AIR	-	32.7	24.2	50.9	47.7	48.7	26.4	24.9	44.9	45.6	49.0
Dry Mole Frac.	-	0.899	0.880	0.900	0.904	0.838	0.886	0.892	0.899	0.906	0.838
Wet Mole Frac.	-	0.101	0.120	0.100	0.096	0.162	0.114	0.108	0.101	0.094	0.162
Gas Velocity, Direct	- ft/sec	60.76	100.62	78.68	35.56	105.03	59.03	100.68	78.31	37.24	105.87
ACFM	-	2,652,908	4,250,370	1,812,869	1,337,785	1,786,813	2,577,378	4,252,822	1,804,223	1,400,912	1,801,102
SCFM	-	1,131,362	1,822,351	1,104,822	866,794	1,546,290	1,097,332	1,813,081	1,094,675	904,467	1,556,379
DSCFM	-	1,016,960	1,603,271	993,937	783,556	1,295,692	972,701	1,617,515	983,947	819,220	1,304,725
DSCFM (rounded)		1,017,000	1,603,300	993,900	783,600	1,295,700	972,700	1,617,500	983,900	819,200	1,304,700
DSCMM		28,800	45,405	28,148	22,190	36,694	27,547	45,808	27,865	23,200	36,950
Stack Based DSCMM		32,721	30,578	37,226	36,434	36,694	31,351	30,976	35,998	36,175	36,950
Excess Air Free DSCFM	-	763,937	1,288,754	656,283	528,619	867,928	767,922	1,292,464	676,523	560,519	873,979
CALCULATED FIRING RATE:											
Dry	- lb/min	6,100	10,291	5,241	4,221	6,931	6,150	10,350	5,418	4,489	6,999
Wet	- lb/min	6,974	11,765	5,991	4,826	7,923	7,078	11,914	6,236	5,167	8,056
Dry	- lb/hr	366,011	617,457	314,433	253,268	415,834	368,987	621,029	325,069	269,329	419,947
Wet	- lb/hr	418,442	705,907	359,476	289,548	475,402	424,708	714,812	374,159	310,002	483,364
CALCULATED FIRING RATE:											
Dry	- tons/hr	183.0	308.7	157.2	126.6	207.9	184.5	310.5	162.5	134.7	210.0
Wet	- tons/hr	209.2	353.0	179.7	144.8	237.7	212.4	357.4	187.1	155.0	241.7
HEAT INPUT:											
MM Btu/hr	-	4,700	7,929	4,038	3,252	5,340	4,744	7,985	4,179	3,463	5,399
PARTICULATE LOADING:											
Grains/DSCF	-	3.3969	3.5648	1.6960	0.0000	0.0024	3.6682	3.1652	1.9603	0.0034	0.0180
lb/hr	-	29622	49007	14453	0.0	26.71	30594	43900	16538	24.2	201.90
lb/MM Btu	-	6.30	6.18	3.58	0.00	0.01	6.45	5.50	3.96	0.01	0.04
Ash Production	lb/hr	40,334	68,044	34,651	27,910	45,825	40,367	67,941	35,563	29,465	45,942
Bagouse Ash		29622	49007	14453	0	26.71	30594	43900	16538	24	201.90
Bottom Ash		10,712	19,037	20,197	27,910	45,798	9,773	24,041	19,024	29,440	45,740
Percent Fly Ash		73.4%	72.0%	41.7%	0.0%	0.1%	75.8%	64.6%	46.5%	0.1%	0.4%
% ISOKINETIC	-	102.3	93.8	103.8	101.8	108.2	102.2	103.1	102.5	101.4	104.1

Location	SCR Inlet Unit 2	SCR Out Unit 2	AirHtr Out Unit 2	FGD Inlet Unit 2	Stack Unit 2	SCR Inlet Unit 2	SCR Out Unit 2	AirHtr Out Unit 2	FGD Inlet Unit 2	Stack Unit 2
Date	06/08/2005	06/08/2005	06/08/2005	06/08/2005	06/08/2005	06/08/2005	06/08/2005	06/08/2005	06/08/2005	06/08/2005
Start Time	1025	1025	1025	1025	1025	1436	1437	1437	1437	1435
Stop Time	1225	1225	1225	1225	1225	1626	1633	1643	1637	1635
Test Number	SCRI-3	SCRO-3	AHO-3	FGD-3	STK-3	SCRI-4	SCRO-4	AHO-4	FGD-4	STK-4
Sample Type	OH-Hg	OH-Hg	OH-Hg	OH-Hg	OH-Hg	OH-Hg	OH-Hg	OH-Hg	OH-Hg	OH-Hg
Impinger Components Wts & Volumes	06/08/2005	06/08/2005	06/08/2005	06/08/2005	06/08/2005	06/08/2005	06/08/2005	06/08/2005	06/08/2005	06/08/2005
Filter Wt., g	9.4202	8.5526	4.8214	filter lost	0.0121	8.9137	8.4228	5.4451	0.0188	0.0880
ppb Hg or ng/filter	<0.004	<0.004	0.022		7.90	<0.004	<0.004	0.025	<5.0	<5.0
total ug	<3.77E-05	<3.42E-05	1.06E-04	0.00	7.90E-03	<3.57E-05	<3.37E-05	1.36E-04	<5.00E-03	<5.00E-03
ug/dscm	<3.11E-05	<3.26E-05	8.54E-05	0.00	3.59E-03	<3.36E-05	<2.90E-05	1.12E-04	<2.09E-03	<2.35E-03
Probe Rinse volume, ml	124	104	165	91	138	102	101	179	181	121
Analytical Hg, ng/ml	<1.0	<1.0	<1.0	<1.0	7.2	<1.0	<1.0	<1.0	<1.0	7.4
ug/dscm	<0.10	<0.10	<0.13	<0.04	0.45	<0.10	<0.09	<0.15	<0.08	0.42
Heated Umbilical Line Rinse volume, ml	143	159	147	165	NA	107	141	126	167	NA
Analytical Hg, ng/ml	<1.0	<1.0	<1.0	<1.0		<1.0	<1.0	<1.0	5.6	
ug/dscm	<0.12	<0.15	<0.12	<0.07		<0.10	<0.12	<0.10	0.39	
KCl volume, ml	547	548	549	615	755	543	544	546	623	748
Analytical Hg, ng/ml	11.3	4.5	31.3	40.4	<2.7	16.1	5.3	25.6	36.7	1.4
ug/dscm	5.10	2.35	13.83	11.04	<0.93	8.23	2.48	11.52	9.57	0.49
Nitric/Peroxide volume, ml	175	175	176	175	180	176	176	175	175	175
Analytical Hg, ng/ml	1.6	2.8	1.0	2.0	<1.00	2.9	3.9	1.0	4.4	<1.00
ug/dscm	0.23	0.47	0.14	0.16	<0.08	0.48	0.59	0.14	0.32	<0.08
KMnO4 volume, ml	247	248	246	247	246	250	225	246	246	246
Analytical Hg, ng/ml	19.6	28.3	1.5	<10.5	10.1	16.2	38.1	2.8	7.4	12.3
ug/dscm	4.00	6.69	0.30	<1.15	1.13	3.81	7.37	0.57	0.76	1.42
KMnO4-Acid Rinse volume, ml	100	100	100	100	100	100	100	100	100	100
Analytical Hg, ng/ml	<1.0	<1.0	<1.0	<1.0	<1.0	<1.0	<1.0	<1.0	<1.0	<1.0
ug/dscm	<0.08	<0.10	<0.08	<0.04	<0.05	<0.09	<0.09	<0.08	<0.04	<0.05
As-Measured Concentrations										
Particulate	3.11E-05	3.26E-05	8.54E-05	0.00E+00	3.59E-03	3.36E-05	2.90E-05	1.12E-04	2.09E-03	2.35E-03
Particulate - % of Total	0.00	0.00	0.00	0.00	0.14	0.00	0.00	0.00	0.02	0.10
Oxidized Fraction	5.32	2.60	14.08	11.16	1.38	8.43	2.69	11.77	10.04	0.91
Oxidized - % of Total	55.26	26.40	96.44	89.19	52.24	65.76	25.03	93.68	89.90	37.01
Elemental Fraction	4.31	7.26	0.52	1.35	1.26	4.39	8.05	0.79	1.13	1.55
Elemental - % of Total	44.74	73.60	3.56	10.81	47.63	34.24	74.97	6.32	10.09	62.89
Total ug/m^3	9.63	9.86	14.60	12.51	2.64	12.82	10.74	12.56	11.17	2.46
Stack Flow Based Emissions										
Particulate	1.70E-05	1.663E-05	5.30E-05	0.00E+00	2.20E-03	1.7545E-05	1.4958E-05	6.7289E-05	1.26E-03	1.45E-03
Oxidized Fraction	2.90	1.33	8.74	6.77	0.84	4.40	1.39	7.06	6.05	0.56
Elemental Fraction	2.35	3.70	0.32	0.82	0.77	2.29	4.16	0.48	0.68	0.95
Total mg/sec	5.25	5.03	9.06	7.60	1.61	6.70	5.54	7.54	6.73	1.52

Location		SCR Inlet Unit 2	SCR Out Unit 2	AirHtr Out Unit 2	FGD Inlet Unit 2	Stack Unit 2	SCR Inlet Unit 2	SCR Out Unit 2	AirHtr Out Unit 2	FGD Inlet Unit 2	Stack Unit 2
Date		06/09/2005	06/09/2005	06/09/2005	06/09/2005	06/09/2005	06/09/2005	06/09/2005	06/09/2005	06/09/2005	06/09/2005
Start Time		935	935	935	935	935	1356	1340	1340	1340	1340
Stop Time		1145	1115	1143	1140	1135	1606	1555	1607	1605	1605
Test Number		SCRI-5	SCRO-5	AHO-5	FGD-5	STK-5	SCRI-6	SCRO-6	AHO-6	FGD-6	STK-6
Sample Type		OH-Hg	OH-Hg	OH-Hg	OH-Hg	OH-Hg	OH-Hg	OH-Hg	OH-Hg	OH-Hg	OH-Hg
Y factor of dry gas meter	-	1.026	0.987	0.960	0.966	1.011	1.026	0.987	0.960	0.966	1.011
Gas Volume	- ft^3	42.40	36.35	47.32	88.98	75.86	41.88	37.80	46.87	87.95	71.16
Delta H of dry gas meter	- " H_2O	0.45	0.69	0.47	1.84	1.44	0.42	0.72	0.44	1.76	1.25
Meter Temperature	- °F	84.0	86.4	89.7	82.1	92.8	97.5	101.1	103.5	89.2	96.5
C Factor of pitot tube	-	0.846	0.838	0.832	0.837	0.833	0.846	0.838	0.832	0.837	0.833
Nozzle Diameter	- inches	0.214	0.183	0.158	0.312	0.155	0.214	0.183	0.158	0.312	0.155
A n (area of nozzle)	- ft^2	0.00025	0.00018	0.00014	0.00053	0.00013	0.00025	0.00018	0.00014	0.00053	0.00013
Area of Stack (Single of Dual)	- ft^2	727.7	704.0	384.0	627.0	283.5	727.7	704.0	384.0	627.0	283.5
H_2O Weight	- gm	110.9	91.9	114.5	188.8	308.2	113.7	95.9	108.0	169.4	282.4
Sample Time	- minutes	120	80	120	120	120	120	80	120	120	120
Barometric Pressure	- " Hg	29.34	29.34	29.34	29.34	29.34	29.34	29.34	29.34	29.34	29.34
Static Pressure	- " H_2O	-7.04	-10.50	-15.60	7.68	-1.46	-6.38	-9.85	-14.20	7.40	-1.17
% Oxygen	-	3.4	3.4	6.1	6.5	6.7	3.7	3.6	6.3	6.8	6.7
% Carbon Dioxide	-	16.6	16.6	14.1	13.7	13.5	16.3	16.4	13.8	13.4	13.5
% N_2 + CO	-	80.0	80.0	79.8	79.8	79.8	80.0	80.0	79.9	79.8	79.8
Stack Temp (Dry Bulb)	- °F	734	716	358	354	137	716	701	356	354	137
Stack Temp (Wet Bulb)	- °F	734.3	716.4	358.0	354.3	137.1	715.8	700.8	355.8	353.7	137.0
"S" sample (rms vel head)	- " H_2O	0.450	1.249	1.149	0.279	2.993	0.413	1.311	1.099	0.265	2.570
Dust Wt.	- gm	10.2741	6.9196	6.0017	0.0311	0.0698	9.4205	6.8748	3.9482	0.0147	0.0267
Sample Volume	- DSCF	41.43	34.04	42.82	82.44	72.06	39.93	34.48	41.37	80.42	67.12
Sample Volume	- dscm	1.173	0.964	1.213	2.335	2.041	1.131	0.976	1.172	2.277	1.901
ABS ST PRES	- " Hg	28.82	28.57	28.19	29.90	29.23	28.87	28.62	28.30	29.88	29.25
ABS ST TEMP	- °R	1194	1176	818	814	597	1176	1161	816	814	597
H_2O - % by Vol	- vapor	11.2	11.3	11.2	9.7	16.8	11.8	11.6	10.9	9.0	16.5
Water Volume	- std ft^3	5.22	4.33	5.39	8.89	14.52	5.36	4.52	5.09	7.98	13.30
Dry Molecular Weight	- lb/lb-mole	30.79	30.79	30.50	30.45	30.43	30.76	30.77	30.46	30.42	30.43
Wet Molecular Weight	- lb/lb-mole	29.36	29.35	29.10	29.24	28.34	29.25	29.29	29.10	29.30	28.37
% EXCESS AIR	-	19.2	19.2	40.8	44.4	46.6	21.2	20.5	42.6	47.7	46.6
Dry Mole Frac.	-	0.888	0.887	0.888	0.903	0.832	0.882	0.884	0.891	0.910	0.835
Wet Mole Frac.	-	0.112	0.113	0.112	0.097	0.168	0.118	0.116	0.109	0.090	0.165
Gas Velocity, Direct	- ft/sec	57.64	94.84	76.13	36.47	104.59	54.85	96.54	74.23	35.51	96.82
ACFM	-	2,516,714	4,005,956	1,753,992	1,372,156	1,779,227	2,394,856	4,077,641	1,710,155	1,335,966	1,647,113
SCFM	-	1,071,821	1,716,732	1,066,810	889,264	1,537,103	1,037,716	1,773,899	1,046,760	865,852	1,424,316
DSCFM	-	951,831	1,523,071	947,482	802,684	1,279,390	915,010	1,568,408	932,151	787,700	1,188,739
DSCFM (rounded)		951,800	1,523,100	947,500	802,700	1,279,400	915,000	1,568,400	932,200	787,700	1,188,700
DSCMM		26,956	43,133	26,833	22,732	36,232	25,913	44,417	26,399	22,308	33,665
Stack Based DSCMM		29,400	29,400	34,763	35,680	36,232	27,793	27,633	32,743	33,904	33,665
Excess Air Free DSCFM	-	796,987	1,275,298	670,944	553,813	869,250	753,022	1,298,252	651,167	531,415	807,660
CALCULATED FIRING RATE:											
Dry	- lb/min	6,415	10,266	5,401	4,458	6,997	6,040	10,414	5,223	4,263	6,479
Wet	- lb/min	7,436	11,898	6,260	5,167	8,110	6,986	12,045	6,041	4,930	7,493
Dry	- lb/hr	384,922	615,932	324,047	267,476	419,823	362,414	624,822	313,394	255,759	388,710
Wet	- lb/hr	446,131	713,876	375,576	310,009	486,582	419,170	722,672	362,473	295,812	449,584
CALCULATED FIRING RATE:											
Dry	- tons/hr	192.5	308.0	162.0	133.7	209.9	181.2	312.4	156.7	127.9	194.4
Wet	- tons/hr	223.1	356.9	187.8	155.0	243.3	209.6	361.3	181.2	147.9	224.8
HEAT INPUT:											
MM Btu/hr	-	4,934	7,894	4,153	3,428	5,381	4,654	8,024	4,025	3,284	4,992
PARTICULATE LOADING:											
Grains/DSCF	-	3.8260	3.1364	2.1626	0.0058	0.0149	3.6400	3.0769	1.4725	0.0028	0.0061
lb/hr	-	31224.7	40961	17570	40	163.95	28558.0	41379	11770	19	62.56
lb/MM Btu	-	6.33	5.19	4.23	0.01	0.03	6.14	5.16	2.92	0.01	0.01
Ash Production	lb/hr	42,611	68,184	35,872	29,610	46,474	39,539	68,168	34,191	27,903	42,408
Bagouse Ash		31225	40961	17570	40	163.95	28558	41379	11770	19	62.56
Bottom Ash		11,386	27,223	18,302	29,570	46,310	10,981	26,789	22,421	27,884	42,346
Percent Fly Ash		73.3%	60.1%	49.0%	0.1%	0.4%	72.2%	60.7%	34.4%	0.1%	0.1%
% ISOKINETIC	-	105.8	107.8	108.3	101.2	101.7	106.1	106.0	104.4	100.6	101.9

Location	SCR Inlet Unit 2	SCR Out Unit 2	AirHtr Out Unit 2	FGD Inlet Unit 2	Stack Unit 2	SCR Inlet Unit 2	SCR Out Unit 2	AirHtr Out Unit 2	FGD Inlet Unit 2	Stack Unit 2
Date	06/09/2005	06/09/2005	06/09/2005	06/09/2005	06/09/2005	06/09/2005	06/09/2005	06/09/2005	06/09/2005	06/09/2005
Start Time	935	935	935	935	935	1356	1340	1340	1340	1340
Stop Time	1145	1115	1143	1140	1135	1606	1555	1607	1605	1605
Test Number	SCRI-5	SCRO-5	AHO-5	FGD-5	STK-5	SCRI-6	SCRO-6	AHO-6	FGD-6	STK-6
Sample Type	OH-Hg	OH-Hg	OH-Hg	OH-Hg	OH-Hg	OH-Hg	OH-Hg	OH-Hg	OH-Hg	OH-Hg
Impinger Components Wts & Volumes	06/09/2005	06/09/2005	06/09/2005	06/09/2005	06/09/2005	06/09/2005	06/09/2005	06/09/2005	06/09/2005	06/09/2005
Filter Wt., g	10.2741	6.9196	6.0017	0.0311	0.0698	9.4205	6.8748	3.9482	0.0147	0.0267
ppb Hg or ng/filter	<0.004	<0.004	0.052	<5.0	<5.0	<0.004	<0.004	0.035	<5.0	148.2
total ug	<4.11E-05	<2.77E-05	3.12E-04	<5.00E-03	<5.00E-03	<3.77E-05	<2.75E-05	1.38E-04	<5.00E-03	1.48E-01
ug/dscm	<3.50E-05	<2.87E-05	2.57E-04	<2.14E-03	<2.45E-03	<3.33E-05	<2.82E-05	1.18E-04	<2.20E-03	7.80E-02
Probe Rinse volume, ml	134	94	177	155	123	129	97	159	119	175
Analytical Hg, ng/ml	<1.0	<1.0	<1.0	1.8	3.2	<1.0	<1.0	<1.0	<1.0	12.2
ug/dscm	<0.11	<0.10	<0.15	0.12	0.19	<0.11	<0.10	<0.14	<0.05	1.12
Heated Umbilical Line Rinse volume, ml	114	155	122	159	NA	100	157	116	172	NA
Analytical Hg, ng/ml	<1.0	<1.0	<1.0	1.4		<1.0	<1.0	<1.0	<1.0	
ug/dscm	<0.10	<0.16	<0.10	0.10		<0.09	<0.16	<0.10	<0.08	
KCl volume, ml	554	536	559	627	743	556	538	553	605	723
Analytical Hg, ng/ml	9.1	3.2	28.9	38.5	2.3	9.7	8.8	28.6	40.2	1.8
ug/dscm	4.30	1.78	13.32	10.34	0.84	4.77	4.85	13.50	10.68	0.68
Nitric/Peroxide volume, ml	175	175	175	175	177	175	175	175	175	177
Analytical Hg, ng/ml	4.2	4.2	1.0	<4.1	<1.0	4.2	3.3	<1.0	<9.0	<1.0
ug/dscm	0.63	0.76	0.14	<0.31	<0.09	0.65	0.59	<0.15	<0.69	<0.09
KMnO4 volume, ml	249	248	249	246	248	250	250	249	249	247
Analytical Hg, ng/ml	32.3	36.4	1.2	<13.2	6.6	21.6	43.4	1.1	<2.8	8.7
ug/dscm	6.85	9.36	0.25	<1.39	0.80	4.77	11.11	0.23	<0.31	1.13
KMnO4-Acid Rinse volume, ml	100	100	100	100	100	100	100	100	100	100
Analytical Hg, ng/ml	<1.0	<1.0	<1.0	<1.0	<1.0	<1.0	<1.0	<1.0	<1.0	<1.0
ug/dscm	<0.09	<0.10	<0.08	<0.04	<0.05	<0.09	<0.10	<0.09	<0.04	<0.05
As-Measured Concentrations										
Particulate	3.50E-05	2.87E-05	2.57E-04	2.14E-03	2.45E-03	3.33E-05	2.82E-05	1.18E-04	2.20E-03	7.80E-02
Particulate - % of Total	0.00	0.00	0.00	0.02	0.12	0.00	0.00	0.00	0.02	2.47
Oxidized Fraction	4.51	2.04	13.57	10.55	1.03	4.97	5.11	13.73	10.81	1.81
Oxidized - % of Total	37.34	16.61	96.63	85.83	52.28	47.42	30.20	96.70	91.19	57.17
Elemental Fraction	7.57	10.23	0.47	1.74	0.94	5.51	11.81	0.47	1.04	1.28
Elemental - % of Total	62.66	83.39	3.37	14.16	47.59	52.58	69.80	3.30	8.79	40.36
Total ug/m^3	12.07	12.27	14.04	12.30	1.97	10.48	16.92	14.20	11.85	3.16
Stack Flow Based Emissions										
Particulate	1.7161E-05	1.4068E-05	1.49E-04	1.27E-03	1.48E-03	1.5434E-05	1.30E-05	6.4362E-05	1.24E-03	4.37E-02
Oxidized Fraction	2.21	1.00	7.86	6.28	0.62	2.30	2.35	7.49	6.11	1.01
Elemental Fraction	3.71	5.01	0.27	1.04	0.57	2.55	5.44	0.26	0.59	0.72
Total mg/sec	5.92	6.01	8.14	7.31	1.19	4.86	7.79	7.75	6.70	1.77

APPENDIX B

Plant Process Data

Plant Name:

General Average Report

Reporting Period: 06/07/2005 to 06/07/2005

Site Name: UNIT#2

Time of Report: 06/09/05 23:19

Data Averaging Type: 1h

Rolling Average Interval: 1

Date	Time	LOADMW (MW)	QSO2PPM (PPM)	QSO2#MM (LBS/MM)	NOXPPMC (PPM)	NOX#/MM (LBS/MM)	FLOW (KSCFM)	FLOWSCFH (SCFH)	ST_TEMP (DEGF)	P_BARO (IN/HG)
06/07/05	12:00	521.9	191.7	0.51	36.3	0.069	1095	8.551E+07	137.3	29.45
	13:00	521.8	193.7	0.51	35.9	0.069	956	8.556E+07	137.1	29.44
	14:00	521.8	179.1	0.47	36.8	0.070	937	8.113E+07	133.0	29.20
Average =		521.8	188.2	0.50	36.3	0.069	996	8.407E+07	135.8	29.36
Maximum =		521.9	193.7	0.51	36.8	0.070	1095	8.556E+07	137.3	29.45
Minimum =		521.8	179.1	0.47	35.9	0.069	937	8.113E+07	133.0	29.20
Possible Values =		3	3	3	3	3	3	3	3	3
Included Values =		3	3	3	3	3	3	3	3	3
Total =		1565.5	564.5	1.49	108.9	0.207	2988	2.522E+08	407.4	88.09

* - excluded values (missing, OOC, invalid, suspect)
< - missing
T - out-of-control
I - invalid
S - suspect
H - exceedance
F - stack not operating
B - invalid (PADER)
U - missing data substituted
-999 - missing value
-888 - value could not be calculated

Run 1 Baseline

Plant Name:

General Average Report

Reporting Period: 06/07/2005 to 06/07/2005

Site Name: UNIT#2

Data Averaging Type: 1h

Time of Report: 06/10/05 00:00

Rolling Average Interval: 1

Date	Time	LOADMW (MW)	QSO2PPM (PPM)	QSO2#MM (LBS/MM)	NOXPPMC (PPM)	NOX#/MM (LBS/MM)	FLOW (KSCFM)	FLOWSCFH (SCFH)	ST_TEMP (DEGF)	P_BARO (IN/HG)
06/07/05	17:00	519.1	180.4	0.48	36.6	0.069	1191	8.537E+07	135.1	29.26
	18:00	521.5	175.0	0.47	36.4	0.070	1328	8.533E+07	135.9	29.32
	19:00	523.3	171.8	0.46	37.2	0.071	1391	8.469E+07	132.2	29.32
Average =		521.3	175.7	0.47	36.8	0.070	1304	8.513E+07	134.4	29.30
Maximum =		523.3	180.4	0.48	37.2	0.071	1391	8.537E+07	135.9	29.32
Minimum =		519.1	171.8	0.46	36.4	0.069	1191	8.469E+07	132.2	29.26
Possible Values =		3	3	3	3	3	3	3	3	3
Included Values =		3	3	3	3	3	3	3	3	3
Total =		1563.9	527.2	1.40	110.3	0.210	3911	2.554E+08	403.2	87.90

* - excluded values (missing, OOC, invalid, suspect)
< - missing
T - out-of-control
I - invalid
S - suspect
H - exceedance
F - stack not operating
B - invalid (PADER)
U - missing data substituted
-999 - missing value
-888 - value could not be calculated

Run 2 Baseline

Plant Name:

General Average Report

Reporting Period: 06/08/2005 to 06/08/2005

Site Name: UNIT#2

Time of Report: 06/09/05 21:15

Data Averaging Type: 1h

Rolling Average Interval: 1

Date	Time	LOADMW (MW)	QSO2PPM (PPM)	QSO2#MM (LBS/MM)	NOXPPMC (PPM)	NOX#/MM (LBS/MM)	FLOW (KSCFM)	FLOWSCFH (SCFH)	ST_TEMP (DEGF)	P_BARO (IN/HG)
06/08/05	10:00	516.6	195.2	0.52	63.2	0.141	1446	8.674E+07	136.5	29.42
	11:00	516.5	189.9	0.49	63.8	0.118	1436	8.614E+07	135.9	29.42
	12:00	516.6	188.7	0.49	59.1	0.110	1422	8.529E+07	136.2	29.41
Average =		516.6	191.2	0.50	62.0	0.123	1434	8.606E+07	136.2	29.42
Maximum =		516.6	195.2	0.52	63.8	0.141	1446	8.674E+07	136.5	29.42
Minimum =		516.5	188.7	0.49	59.1	0.110	1422	8.529E+07	135.9	29.41
Possible Values =		3	3	3	3	3	3	3	3	3
Included Values =		3	3	3	3	3	3	3	3	3
Total =		1549.7	573.7	1.50	186.1	0.369	4303	2.582E+08	408.6	88.25

* - excluded values (missing, OOC, invalid, suspect)
< - missing
T - out-of-control
I - invalid
S - suspect
M - exceedance
F - stack not operating
B - invalid (PADER)
U - missing data substituted
-999 - missing value
-888 - value could not be calculated

Run 1 Low chlorine injection

Plant Name:

General Average Report

Reporting Period: 06/08/2005 to 06/08/2005

Site Name: UNIT#2

Time of Report: 06/09/05 21:16

Data Averaging Type: 1h

Rolling Average Interval: 1

Date	Time	LOADMW (MW)	QSO2PPM (PPM)	QSO2#MM (LBS/MM)	NOXPPMC (PPM)	NOX#/MM (LBS/MM)	FLOW (KSCFM)	FLOWSCFH (SCFH)	ST_TEMP (DEGF)	P_BARO (IN/HG)
06/08/05	14:00	515.9	185.8	0.48	52.6	0.098	1421	8.524E+07	136.3	29.37
	15:00	515.9	182.1	0.48	50.2	0.094	1415	8.490E+07	136.3	29.38
	16:00	516.6	181.9	0.47	50.3	0.094	1408	8.451E+07	136.4	29.37
Average =		516.1	183.2	0.48	51.0	0.095	1415	8.488E+07	136.3	29.38
Maximum =		516.6	185.8	0.48	52.6	0.098	1421	8.524E+07	136.4	29.38
Minimum =		515.9	181.9	0.47	50.2	0.094	1408	8.451E+07	136.3	29.37
Possible Values =		3	3	3	3	3	3	3	3	3
Included Values =		3	3	3	3	3	3	3	3	3
Total =		1548.4	549.7	1.43	153.1	0.286	4244	2.546E+08	409.0	88.13

* - excluded values (missing, OOC, invalid, suspect)
< - missing
T - out-of-control
I - invalid
S - suspect
H - exceedance
F - stack not operating
B - invalid (PADER)
U - missing data substituted
-999 - missing value
-888 - value could not be calculated

Run 2 Low chlorine injection

Plant Name:

General Average Report

Reporting Period: 06/09/2005 to 06/09/2005

Site Name: UNIT#2

Time of Report: 06/09/05 22:30

Data Averaging Type: 1h

Rolling Average Interval: 1

Date	Time	LOADMW (MW)	QSO2PPM (PPM)	QSO2#MM (LBS/MM)	NOXPPMC (PPM)	NOX#/MM (LBS/MM)	FLOW (XSCFM)	FLOWSCFH (SCFH)	ST_TEMP (DEGF)	P_BARO (IN/HG)
06/09/05	09:00	513.0	191.7	0.51	50.0	0.096	1382	8.295E+07	137.0	29.46
	10:00	515.7	195.1	0.52	46.1	0.087	1384	8.302E+07	137.4	29.46
	11:00	516.2	190.3	0.50	46.1	0.087	1391	8.345E+07	137.6	29.46
	12:00	514.7	187.5	0.50	47.0	0.090	1398	8.385E+07	137.9	29.45
Average =		514.9	191.2	0.51	47.3	0.090	1389	8.332E+07	137.5	29.46
Maximum =		516.2	195.1	0.52	50.0	0.096	1398	8.385E+07	137.9	29.46
Minimum =		513.0	187.5	0.50	46.1	0.087	1382	8.295E+07	137.0	29.45
Possible Values =		4	4	4	4	4	4	4	4	4
Included Values =		4	4	4	4	4	4	4	4	4
Total =		2059.6	764.7	2.03	189.2	0.360	5555	3.333E+08	549.9	117.84

* - excluded values (missing, OOC, invalid, suspect)
< - missing
T - out-of-control
I - invalid
S - suspect
N - exceedance
F - stack not operating
B - invalid (RADER)
U - missing data substituted
-999 - missing value
-888 - value could not be calculated

Run 1 high chlorine injection

Plant Name:

General Average Report

Reporting Period: 06/09/2005 to 06/09/2005

Site Name: UNIT#2

Time of Report: 06/09/05 21:17

Data Averaging Type: 1h

Rolling Average Interval: 1

Date	Time	LOADMW (MW)	QSO2PPM (PPM)	QSO2#MM (LBS/MM)	NOXPPMC (PPM)	NOX#/MM (LBS/MM)	FLOW (KSCFM)	FLOWSCFH (SCFH)	ST_TEMP (DEGF)	P_BARO (IN/HG)
06/09/05	14:00	490.8	177.3	0.48	43.8	0.085	1329	7.974E+07	137.6	29.43
	15:00	490.5	174.7	0.47	44.3	0.086	1343	8.059E+07	137.5	29.43
	16:00	490.5	171.6	0.46	44.1	0.084	1344	8.066E+07	137.3	29.42
Average =		490.6	174.6	0.47	44.0	0.085	1339	8.033E+07	137.5	29.42
Maximum =		490.8	177.3	0.48	44.3	0.086	1344	8.066E+07	137.6	29.43
Minimum =		490.5	171.6	0.46	43.8	0.084	1329	7.974E+07	137.3	29.42
Possible Values =		3	3	3	3	3	3	3	3	3
Included Values =		3	3	3	3	3	3	3	3	3
Total =		1471.8	523.7	1.41	132.1	0.255	4017	2.410E+08	412.4	88.27

* - excluded values (missing, OOC, invalid, suspect)
< - missing
T - out-of-control
I - invalid
S - suspect
H - exceedance
F - stack not operating
B - invalid (PADER)
U - missing data substituted
-999 - missing value
-888 - value could not be calculated

Run 2 high chlorine injection

6/7/05 Baseline

Coal Feeders

multiplier → .044 [redacted]

Test 1

	1220	1250	1320	1350	1420	1450	
A1	12444	11830	12318	12817	13329	13781	1387
A2	10585	11010	11438	11875	12324	12718	2133
B1	11595	12100	12607	13118	13645	14112	2517
B2	13669	14244	14820	15410	16021	16562	2893
C1	11907	12437	12968	13512	14074	14572	2665
C2	12414	12964	13515	14074	14656	15173	275

14304 x .044

629.37

Test 2

	1700	1730	1800	1830	1900	1930	
A1	16020	16419	16888	17348	17883	18373	2353
A2	14681	15030	15442	15844	16312	16744	2063
B1	16435	16848	17327	17807	18360	18860	2426
B2	19250	19727	20284	20839	21480	22058	2808
C1	17046	17493	18016	18541	19143	19679	2333
C2	17735	18199	18741	19283	19906	20459	2724

14706 x .044

647.064

coal feeders multiplier – .044 6/8/05 every 30 minutes Run 1 w/Chlorine

Time	1026	1055	1125	1155	1225	1255
A1	10908	11466	12020	12571	13138	13203 [27]
A2	9733	10231	10725	11215	11721	12223 [24]
B1	9069	9483	9904	10338	10787	11232 [2163]
B2	10416	10891	11375	11873	12388	1290 [248]
C1	11543	12075	12607	13140	13686	14227 [268]
C2	12201	12787	13372	13961	14564	15159 [275]
						15573 x .044
						685.212

Time						
A1						
A2						
B1						
B2						
C1						
C2						

6-8-05

coal feeders multiplier - .044

every 30 minutes

Run 2 w/Chlorine

Time	1435	1505	1535	1605	1635	1700
A1	15610	16116	16656	17249	17829	18322 [2712]
A2	13935	14396	14879	15407	15926	16366 [2431]
B1	12741	13138	13542	13990	14431	14793 [205.]
B2	14637	15104	15557	16072	16577	16993 [2356]
C1	16066	16572	17059	17597	18118	18540 [2474]
C2	17190	17748	18286	18882	19459	19928 [2738]
						14,763 x .044
						[649.57]
Time						
A1						
A2						
B1						
B2						
C1						
C2						

every 30 minutes

coal feeders multiplier – .044

Time	0937	1005	1035	1106	1135	1205
A1	11041	11624	12260	12936	13553	14197 3156
A2	9886	10426	11018	11652	12231	12835 2949
B1	10949	11533	12170	12843	13460	14102 3153
B2	12770	13462	14221	15024	15758	16523 3753
C1	6880	7232	7615	8025	8402	8797 1917
C2	7985	8389	8829	9299	9732	10184 2199
						17127 × .044
						753.58
Time						Tons
A1						
A2		6/9/05				
B1						
B2		Run 1				
C1						
C2						

every 30 minutes

coal feeders multiplier – .044

Time	1340	1410	1440	1510	1540	1610	
A1	16238	16852	17563	18172	18759	19461	3223
A2	14751	15325	15977	16529	17052	17684	2933
B1	16123	16734	17442	18050	18641	19357	3234
B2	18919	19697	20479	21173	21865	22700	3781
C1	10110	10492	10916	11296	11674	12125	2015
C2	11677	12114	12603	13038	13471	13987	2310
						17496	×.044
							769.824

Time						
A1						
A2		Run 2				
B1		High	6/9/05			
B2						
C1						
C2						

Baseline Run 1

	1220	1250	1320	1350	1420	1450
Testing data for Mercury testing June 7 of 2005			Start time	1220	End Time	1500
Test data collection time						
ESP inlet temperature	342	344	345	344	346	347
FGD inlet gas temperature	360	360	361	361	362	362
SCR inlet gas temperature	730	730	732	732	730	731
SCR outlet gas temperature	730	731	731	734	733	734
SCR inlet NOX ppm	210	211	213	214	209	215
SCR outlet NOX ppm	61	57	57	58	62	62
NH3 injection rate	575 lbs	573	572	585	573	573
NH3 set point	59	59	59	59	59	59
Boiler Feedwater flow	3.7	3.69	3.7	3.7	3.7	3.4
Boiler O2 readings East	2.4	2.5	2.7	2.5	2.8	3
Boiler O2 reading West	3.4	3.5	3.5	3.4	3.5	3.8
Steam Flow	3.1	3.09	3.09	3.08	3.75	3.75
Steam Pressure MAIN	2482	2497	2488	2485	2483	2496
Ambient temp	89	89	90	90	89	88
relative humidity	47	44	43.7	42	42	42
Barometric pressure	29.50	29.50	29.50	29.50	29.50	29.50
Coal Feed Rate						
A start	B start			C start		
A stop	B stop			C stop		
A total	B total			C total		
FGD Makeup water flow	1109					
	A	B	C	D		
FGD Reagent flow slurry	75	87	67	80		
Mist Eliminator flow	320					

Baseline Run 2 No coal treated

1700

Testing data for Mercury testing June 7 of 2005			Start time	1706	End Time	1920
Test data collection time	1700	1730	1800	1830	1900	1930
ESP inlet temperature	339	341	344	344	346	346
FGD inlet gas temperature	350	357	359	361	361	362
SCR inlet gas temperature	716	717	736	740	738	739
SCR outlet gas temperature	724	725	737	739	739	740
SCR inlet NOX ppm	217	215	220	213	216	218
SCR outlet NOX ppm	59	55	63	60	60	61
NH3 injection rate	572	580	574	569	584	591
NH3 set point	59	59	59	59	59	59
Boiler Feedwater flow	3.7	3.7	3.7	3.7	3.75	3.76
Boiler O2 readings East	3	3.2	2.8	3	3.2	3.2
Boiler O2 reading West	3.6	3.8	3.0	3.6	3.2	3.8
Steam Flow	3.1	3.1	3.08	3.07	3.07	3.06
Steam Pressure	2493	2490	2488	2488	2488	2485
Ambient temp	91	89	89	87	85	84
relative humidity	35	35	38	40	43	46
Barometric pressure	29.43	29.44	29.44	29.44	29.45	29.45
Coal Feed Rate						
A start	B start			C start		
A stop	B stop			C stop		
A total	B total			C total		
FGD Makeup water flow	1066		1077			1096
	A	B	C	D		
FGD Reagent flow slurry	68	83	67	77		
Mist Eliminator flow	310		313		317	320

Hg Testing 6/8/05 Run 1 with ≈ 2 g/m Chlorine injection on coal

Testing data for Mercury testing June 8 of 2005			Start time	1025	End Time	1257
Test data collection time	1028	1057	1126	1155	1226	1256
ESP inlet temperature	339/344	339/343	343/345	340/343	341/344	341/345
FGD inlet gas temperature	358	358	358	358	359	359
SCR inlet gas temperature	726	726	727	728	729	729
SCR outlet gas temperature	727	728	728	729	730	731
SCR inlet NOX ppm	197	194	191	195	198	197
SCR outlet NOX ppm	88	87	88	87	86	83
NH3 injection rate	503 lbs	496	487	498	500	524
NH3 set point	59	59	59	59	59	59
Boiler Feedwater flow	3.4	3.6	3.6	3.6	3.6	3.6
Boiler O2 readings East	2.3	2.4	3.3	2.7	3.1	2.9
Boiler O2 reading West	3.2	3.1	3.7	3.5	4.0	3.2
Steam Flow	3.6	3.0	3.1	3.0	3.0	3.0
Steam Pressure	2433	2496	2484	2485	2484	2493
Ambient temp	81	80	78	78	75	79
relative humidity	60.2	59	68	71	74	66
Barometric pressure	29.51	29.51	29.51	29.49	29.5	29.46
Coal Feed Rate						
A start	B start			C start		
A stop	B stop			C stop		
A total	B total			C total		
FGD Makeup water flow	1106	1092	1104			
FGD Reagent flow slurry						
Mist Eliminator flow	310	311	314	313		

Hg testing 6/8/05 Run 2 w/ ≈ 2g/m Chlorine

Testing data for Mercury testing June 6-8-05 of 2005				Start time	1435	End Time	1700
Test data collection time		1435	1505	1535	1605	1635	1700
ESP inlet temperature	°F	345	346	346	346	346	346
FGD inlet gas temperature	°F	361	362	363	363	363	363
SCR inlet gas temperature	°F	731	732	732	732	731	733
SCR outlet gas temperature	°F	736	737	738	738	737	738
SCR inlet NOX ppm	PPM	204	207	207	211	204	204
SCR outlet NOX ppm	PPM	76	77	76	75	78	77
NH3 injection rate	~~PP~~#/HR	535	551	546	557	539	539
NH3 set point	PPM	59	59	59	59	59	59
Boiler Feedwater flow	M#/HR	3.6	3.65	3.62	3.62	3.64	3.59
Boiler O2 readings East	%	3	3	3	2.6	3	2.6
Boiler O2 reading West	%	4	4	4	3.6	4	3.6
kH/HR Steam Flow	1000 #/HR	3.1	3.07	3.05	3.04	3.03	3.04
Steam Pressure	Psi	2494	2475	2501	2493	2483	2492
Ambient temp	°F	89	89	91	90	90	88
relative humidity		47	43	42	40	42	43
Barometric pressure	Psi	29.44	29.44	29.43	29.43	29.43	29.42
Coal Feed Rate	ton/HR						
A start		B start			C start		
A stop		B stop			C stop		
A total		B total			C total		
FGD Makeup water flow	g/m	1110			1126		1036
		A	B	C	D		
FGD Reagent flow slurry	g/m	69	77	81	72		
Mist Eliminator flow	g/m	310	330	310	315	320	

Hg test w/ high level of chlorine 1 4 gal/m

Run 1 6-9-05

Unit 2

Testing data for Mercury testing June 9 of 2005				Start time	0937	End Time	1206
Test data collection time		0938	1005	1035	1105	1135	1206
		344	344	347	345	345	345
ESP inlet temperature		345	346	346	345	347	347
FGD inlet gas temperature		360	360	361	361	362	362
SCR inlet gas temperature		730	730	731	732	733	729
SCR outlet gas temperature		728	729	730	731	733	731
SCR inlet NOX ppm		200	206	203	207	208	205
SCR outlet NOX ppm		72	73	74	73	76	71
NH3 injection rate		503	525	520	525	535	522
NH3 set point		59	59	59	59	59	59
Boiler Feedwater flow	3.56		3.57	3.57	3.56	3.59	3.53
Boiler O2 readings East		2.4	2.3	2.2	2.2	2.3	2.4
Boiler O2 reading West		2.4	3.2	3.2	2.4	3.1	3.4
Steam Flow		2.9	3.0	3.01	3.0	3.01	2.9
Steam Pressure		2484	2490	2487	2492	2466	2482
Ambient temp		72	74	74	75	79	78
relative humidity		79	76	74	73	67	66
Barometric pressure		29.55	29.55	29.55	29.56	29.55	29.55
Coal Feed Rate							
A start		B start			C start		
A stop		B stop			C stop		
A total		B total			C total		
FGD Makeup water flow							
				1113			1077
FGD Reagent flow slurry							
Mist Eliminator flow		317		321			317

Hg Test w/ high level of chlorine ≈ 4g/m

Run 2

U#2

Testing data for Mercury testing June 9 of 2005			Start time	1340	End Time	1610
Test data collection time	1343	1410	1440	1510	1540	1610
	346	341				
ESP inlet temperature	348	343	337	348	348	348
			339	346	346	346
FGD inlet gas temperature	364	359	355	358	360	361
SCR inlet gas temperature	726	715	712	713	714	714
SCR outlet gas temperature	727	718	714	715	715	716
SCR inlet NOX ppm	204	196	206	204	203	205
SCR outlet NOX ppm	79	75	72.7	74	67.4	69.3
NH3 injection rate	544	479	495	501	504	513
NH3 set point	59	59	59	59	59	59
Boiler Feedwater flow	3.37	3.34	3.38	3.42	3.38	3.51
Boiler O2 readings East	3.5	2.2	2.8	2.8	2.3	2
Boiler O2 reading West	3.7	3.2	3.6	3.4	3.3	3
Steam Flow	2.9	2.8	2.9	2.9	2.9	2.9
Steam Pressure	2472	2493	2483	2486	2493	2491
Ambient temp	81	81	82	82	86	84
relative humidity	62	63	61	62	58	60
Barometric pressure	29.52	29.51	29.51	29.51	29.48	29.50
Coal Feed Rate						
A start	B start			C start		
A stop	B stop			C stop		
A total	B total			C total		
FGD Makeup water flow		1096				1246
FGD Reagent flow slurry						
Mist Eliminator flow			311			

APPENDIX C

Flue Gas Mercury Data

- Summary of Ontario-Hydro Impinger Analyses Data Sheets
- Recovery Data Sheets

Distribution: Mitchum - Locke
Project No.: 1621-87-1
Sample Date: 6-7-05

Location: SCRI Task: _____ Test: 1 Operator: Jim

Sample ID	Bottle #	Description	Initial Vol mL	Rinse Vol mL	Gain mL	Final Vol mL	ppb Hg	Total ug of Hg
	S	Filter/Solids						
1	1A	Probe & Filter Rinse				111		
2	1B	Heated Line Rinse				95		
3	2	KCl Impingers	300	150	99	549		
4	3	HNO_3/H_2O_2 Impinger	100	75	0	175		
5	4	$KMnO_4$ Impingers	200	50	-6	244		
6	5	$KMnO_4$ Acid Rinse		100		100		

Filter Gross wt: 13.0220 g 1-2 Filter Net wt: 9.9546 g
Filter Tare wt: 3.0674 g Probe/Line Rinse wt: 0 g Condensate Total: 101.3 ml
Filter Net wt: 9.9546 g Total Particulate wt: 9.9546 g

Recovered By: Jm Date: 6-7-05

Location: SCRO Task: _____ Test: 1 Operator: Bruce

Sample ID	Bottle #	Description	Initial Vol mL	Rinse Vol mL	Gain mL	Final Vol mL	ppb Hg	Total ug of Hg
	S	Filter/Solids						
7	1A	Probe & Filter Rinse				93		
8	1B	Heated Line Rinse				90		
9	2	KCl Impingers	300	150	99	549		
10	3	HNO_3/H_2O_2 Impinger	100	75	0	175		
11	4	$KMnO_4$ Impingers	200	50	-5	245		
12	5	$KMnO_4$ Acid Rinse		100		100		

Filter Gross wt: 10.3316 g 7-8 Filter Net wt: 6.9256 g
Filter Tare wt: 3.4060 g Probe/Line Rinse wt: 0 g Condensate Total: 110.3 ml
Filter Net wt: 6.9256 g Total Particulate wt: 6.9256 g

Recovered By: Jm Date: 6-7-05

Backflush

Location: AHO Task: _____ Test: 1 Operator: Gary

Sample ID	Bottle #	Description	Initial Vol mL	Rinse Vol mL	Gain mL	Final Vol mL	ppb Hg	Total ug of Hg
	S	Filter/Solids						
13	1A	Probe & Filter Rinse				174		
14	1B	Heated Line Rinse				128		
15	2	KCl Impingers	300	150	111	561		
16	3	HNO_3/H_2O_2 Impinger	100	75	13	188		
17	4	$KMnO_4$ Impingers	200	50	-35	215		
18	5	$KMnO_4$ Acid Rinse		100		100		

Filter Gross wt: 2.8176 g 13 Filter Net wt: 1.1440 g
Filter Tare wt: 1.6736 g Probe/Line Rinse wt: 0 g Condensate Total: 103.0 ml
Filter Net wt: 1.1440 g Total Particulate wt: 1.1440 g

Recovered By: Jm Date: 6-7-05

Distribution: Witham - Locke
Project No.: 1621-82-1
Sample Date: 6-7-05

Location: FGD Task: 1 Test: 1 Operator: Jeff

Sample ID	Bottle #	Description	Initial Vol mL	Rinse Vol mL	Gain mL	Final Vol mL	ppb Hg	Total ug of Hg
	S	Filter/Solids						
19	1A	Probe & Filter Rinse				138		
20	1B	Heated Line Rinse				150		
21	2	KCl Impingers	300	150	158	608		
22	3	HNO_3/H_2O_2 Impinger	100	75	-1	174		
23	4	$KMnO_4$ Impingers	200	50	-4	246		
24	5	$KMnO_4$ Acid Rinse		100		100		

Filter Gross wt: 0.1635 g 21 Filter Net wt: 0.0162 g
Filter Tare wt: 0.1473 g Probe/Line Rinse wt: 0 g Condensate Total: 175.1 ml
Filter Net wt: 0.0162 g Total Particulate wt: 0.0162 g

Recovered By: Jr Date: 6-7-05

Location: Stack Task: Test: 1 Operator: Keith

Sample ID	Bottle #	Description	Initial Vol mL	Rinse Vol mL	Gain mL	Final Vol mL	ppb Hg	Total ug of Hg
	S	Filter/Solids						
25	1	Probe & Filter Rinse				110		
26	2	KCl Impingers	300	150	302	752		
27	3	HNO_3/H_2O_2 Impinger	100	75	1	176		
28	4	$KMnO_4$ Impingers	200	50	-9	241		
29	5	$KMnO_4$ Acid Rinse		100		100		

Filter Gross wt: 0.4327 g 30 Filter Net wt: 0.0209 g
Filter Tare wt: 0.4118 g Probe/Line Rinse wt: 0 g Condensate Total: 308.4 ml
Filter Net wt: 0.0209 g Total Particulate wt: 0.0209 g

Recovered By: Jr Date: 6-7-05

Sample ID	Description	ppb Hg	Total ug of Hg
	3 in. Filter Blank		
	Thimble Blank		
30	KCl Blank		
31	HNO_3 / H2O2 Blank		
32	$KMnO_4$ Blank		
33	HNO_3 / HCl Blank		

Distribution: Mithum - Locke
Project No.: 1621-87-1
Sample Date: 6-7-05

Location: SCRI Task: _____ Test: 2 Operator: Jim

Sample ID	Bottle #	Description	Initial Vol mL	Rinse Vol mL	Gain mL	Final Vol mL	ppb Hg	Total ug of Hg
	S	Filter/Solids						
34	1A	Probe & Filter Rinse				109		
35	1B	Heated Line Rinse				118		
36	2	KCl Impingers	300	150	95	545		
37	3	HNO_3/H_2O_2 Impinger	100	75	-1	174		
38	4	$KMnO_4$ Impingers	200	50	-2	248		
39	5	$KMnO_4$ Acid Rinse		100		100		

Filter Gross wt: 14.5614 g 3-4 Filter Net wt: 11.4581 g
Filter Tare wt: 3.1033 g Probe/Line Rinse wt: 0 g Condensate Total: 101.3 ml
Filter Net wt: 11.4581 g Total Particulate wt: 11.4581 g

Recovered By: Jm Date: 6-7-05

Location: SCRO Task: _____ Test: 2 Operator: Bruce

Sample ID	Bottle #	Description	Initial Vol mL	Rinse Vol mL	Gain mL	Final Vol mL	ppb Hg	Total ug of Hg
	S	Filter/Solids						
40	1A	Probe & Filter Rinse				157		
41	1B	Heated Line Rinse				166		
42	2	KCl Impingers	300	150	82	532		
43	3	HNO_3/H_2O_2 Impinger	100	75	0	175		
44	4	$KMnO_4$ Impingers	200	50	-5	245		
45	5	$KMnO_4$ Acid Rinse		100		100		

Filter Gross wt: 8.0819 g 9-10 Filter Net wt: 4.6821 g
Filter Tare wt: 3.3998 g Probe/Line Rinse wt: 0.2277 g Condensate Total: 85.9 ml
Filter Net wt: 4.6821 g Total Particulate wt: 4.9098 g

Recovered By: Jm Date: 6-7-05

Location: AHO Task: _____ Test: 2 Operator: Gary

Sample ID	Bottle #	Description	Initial Vol mL	Rinse Vol mL	Gain mL	Final Vol mL	ppb Hg	Total ug of Hg
	S	Filter/Solids						
46	1A	Probe & Filter Rinse				184		
47	1B	Heated Line Rinse				117		
48	2	KCl Impingers	300	150	91	541		
49	3	HNO_3/H_2O_2 Impinger	100	75	0	175		
50	4	$KMnO_4$ Impingers	200	50	-3	247		
51	5	$KMnO_4$ Acid Rinse		100		100		

Filter Gross wt: 6.3667 g 14 Filter Net wt: 4.6688 g
Filter Tare wt: 1.6979 g Probe/Line Rinse wt: 0 g Condensate Total: 96.7 ml
Filter Net wt: 4.6688 g Total Particulate wt: 4.6688 g

Recovered By: Jm Date: 6-7-05

Distribution: Wethum - Loche
Project No.: 1621-87-1
Sample Date: 6-7-05

Location: FGD Task: _____ Test: 2 Operator: Jeff

Sample ID	Bottle #	Description	Initial Vol mL	Rinse Vol mL	Gain mL	Final Vol mL	ppb Hg	Total ug of Hg
	S	Filter/Solids						
52	1A	Probe & Filter Rinse				130		
53	1B	Heated Line Rinse				161		
54	2	KCl Impingers	300	150	162	612		
55	3	HNO_3/H_2O_2 Impinger	100	75	0	175		
56	4	$KMnO_4$ Impingers	200	50	-8	242		
57	5	$KMnO_4$ Acid Rinse		100		100		

Filter Gross wt: 0.1816 g 22 Filter Net wt: 0.0329 g
Filter Tare wt: 0.1487 g Probe/Line Rinse wt: 0 g Condensate Total: 170.3 ml
Filter Net wt: 0.0329 g Total Particulate wt: 0.0329 g

Recovered By: Jn Date: 6-7-05

Location: Stack Task: _____ Test: 2 Operator: Keith

Sample ID	Bottle #	Description	Initial Vol mL	Rinse Vol mL	Gain mL	Final Vol mL	ppb Hg	Total ug of Hg
	S	Filter/Solids						
58	1	Probe & Filter Rinse				175		
59	2	KCl Impingers	300	150	297	747		
60	3	HNO_3/H_2O_2 Impinger	100	75	6	181		
61	4	$KMnO_4$ Impingers	200	50	-7	243		
62	5	$KMnO_4$ Acid Rinse		100		100		

Filter Gross wt: 0.4290 g 31 Filter Net wt: 0.0192 g
Filter Tare wt: 0.4098 g Probe/Line Rinse wt: 0 g Condensate Total: 310.9 ml
Filter Net wt: 0.0192 g Total Particulate wt: 0.0192 g

Recovered By: Jn Date: 6-7-05

Sample ID	Description	ppb Hg	Total ug of Hg
	3 in. Filter Blank		
	Thimble Blank		
	KCl Blank		
	HNO_3 / H2O2 Blank		
	$KMnO_4$ Blank		
	HNO_3 / HCl Blank		

Distribution: Witham - Locke
Project No.: 1621-87-1
Sample Date: 6-7-05

Location: AHO Task: Blank Test: 2 Operator: Gary

Sample ID	Bottle #	Description	Initial Vol mL	Rinse Vol mL	Gain mL	Final Vol mL	ppb Hg	Total ug of Hg
	S	Filter/Solids						
	1A	Probe & Filter Rinse						
	1B	Heated Line Rinse						
63	2	KCl Impingers	300	150		450		
64	3	HNO_3/H_2O_2 Impinger	100	75		175		
65	4	$KMnO_4$ Impingers	200	50		250		
66	5	$KMnO_4$ Acid Rinse		100		100		

Filter Gross wt: _____g Filter Net wt: _____g
Filter Tare wt: _____g Probe/Line Rinse wt: _____g Condensate Total: _____ml
Filter Net wt: _____g Total Particulate wt: _____g

Recovered By: Jm Date: 6-7-05

Location: Stack Task: _____ Test: _____ Operator: _____

Sample ID	Bottle #	Description	Initial Vol mL	Rinse Vol mL	Gain mL	Final Vol mL	ppb Hg	Total ug of Hg
	S	Filter/Solids						
	1	Probe & Filter Rinse						
	2	KCl Impingers						
	3	HNO_3/H_2O_2 Impinger						
	4	$KMnO_4$ Impingers						
	5	$KMnO_4$ Acid Rinse						

Filter Gross wt: _____g Filter Net wt: _____g
Filter Tare wt: _____g Probe/Line Rinse wt: _____g Condensate Total: _____ml
Filter Net wt: _____g Total Particulate wt: _____g

Recovered By: _____ Date: _____

Sample ID	Description	ppb Hg	Total ug of Hg
	3 in. Filter Blank		
	Thimble Blank		
	KCl Blank		
	HNO_3 / H2O2 Blank		
67	$KMnO_4$ Blank		
	HNO_3 / HCl Blank		

Distribution: Methum - Roche
Project No.: 1621-87-1
Sample Date: 6-8-05

Location: SCRI Task: _____ Test: 3 Operator: Jim

Sample ID	Bottle #	Description	Initial Vol mL	Rinse Vol mL	Gain mL	Final Vol mL	ppb Hg	Total ug of Hg
	S	Filter/Solids						
68	1A	Probe & Filter Rinse				124		
69	1B	Heated Line Rinse				143		
70	2	KCl Impingers	300	150	97	547		
71	3	HNO_3/H_2O_2 Impinger	100	75	0	175		
72	4	$KMnO_4$ Impingers	200	50	-3	247		
73	5	$KMnO_4$ Acid Rinse		100		100		

Filter Gross wt: 10.9773 g 5 Filter Net wt: 9.4202 g
Filter Tare wt: 1.5571 g Probe/Line Rinse wt: 0 g Condensate Total: 102.2 ml
Filter Net wt: 9.4202 g Total Particulate wt: 9.4202 g

Recovered By: Jim Date: 6-8-05

Location: SCRO Task: _____ Test: 3 Operator: Bruce

Sample ID	Bottle #	Description	Initial Vol mL	Rinse Vol mL	Gain mL	Final Vol mL	ppb Hg	Total ug of Hg
	S	Filter/Solids						
74	1A	Probe & Filter Rinse				104		
75	1B	Heated Line Rinse				159		
76	2	KCl Impingers	300	150	98	548		
77	3	HNO_3/H_2O_2 Impinger	100	75	0	175		
78	4	$KMnO_4$ Impingers	200	50	-2	248		
79	5	$KMnO_4$ Acid Rinse		100		100		

Filter Gross wt: 12.1338 g 11-12 Filter Net wt: 8.5526 g
Filter Tare wt: 3.5812 g Probe/Line Rinse wt: 0 g Condensate Total: 107.4 ml
Filter Net wt: 8.5526 g Total Particulate wt: 8.5526 g

Recovered By: Jim Date: 6-8-05

Location: AHO Task: _____ Test: 3 Operator: Gary

Sample ID	Bottle #	Description	Initial Vol mL	Rinse Vol mL	Gain mL	Final Vol mL	ppb Hg	Total ug of Hg
	S	Filter/Solids						
80	1A	Probe & Filter Rinse				165		
81	1B	Heated Line Rinse				147		
82	2	KCl Impingers	300	150	99	549		
83	3	HNO_3/H_2O_2 Impinger	100	75	1	174		
84	4	$KMnO_4$ Impingers	200	50	-4	246		
85	5	$KMnO_4$ Acid Rinse		100		100		

Filter Gross wt: 6.2802 g 15 Filter Net wt: 4.8214 g
Filter Tare wt: 1.4588 g Probe/Line Rinse wt: 0 g Condensate Total: 103.9 ml
Filter Net wt: 4.8214 g Total Particulate wt: 4.8214 g

Recovered By: Jim Date: 6-8-05

Distribution: Withum - Locke
Project No.: R21-87-1
Sample Date: 6-8-05

Location: FGD Task: _____ Test: 3 Operator: Jeff

Sample ID	Bottle #	Description	Initial Vol mL	Rinse Vol mL	Gain mL	Final Vol mL	ppb Hg	Total ug of Hg
	S	Filter/Solids						
86	1A	Probe & Filter Rinse				91		
87	1B	Heated Line Rinse				165		
88	2	KCl Impingers	300	150	165	615		
89	3	HNO_3/H_2O_2 Impinger	100	75	0	175		
90	4	$KMnO_4$ Impingers	200	50	-3	247		
91	5	$KMnO_4$ Acid Rinse		100		100		

Filter Gross wt: _____ g 24 Filter Net wt: _____ g
Filter Tare wt: _____ g Probe/Line Rinse wt: _____ g Condensate Total: 179.2 ml
Filter Net wt: _____ g Total Particulate wt: _____ g

Filter Lost

Recovered By: Jr Date: 6-8-05

Location: Stack Task: _____ Test: 3 Operator: Keith

Sample ID	Bottle #	Description	Initial Vol mL	Rinse Vol mL	Gain mL	Final Vol mL	ppb Hg	Total ug of Hg
	S	Filter/Solids						
92	1	Probe & Filter Rinse				138		
93	2	KCl Impingers	300	150	305	755		
94	3	HNO_3/H_2O_2 Impinger	100	75	5	180		
95	4	$KMnO_4$ Impingers	200	50	-4	246		
96	5	$KMnO_4$ Acid Rinse		100		100		

Filter Gross wt: 0.4202 g 32 Filter Net wt: 0.0121 g
Filter Tare wt: 0.4081 g Probe/Line Rinse wt: 0 g Condensate Total: 318.9 ml
Filter Net wt: 0.0121 g Total Particulate wt: 0.0121 g

Recovered By: Jr Date: 6-8-05

Sample ID	Description	ppb Hg	Total ug of Hg
	3 in. Filter Blank		
	Thimble Blank		
	KCl Blank		
	HNO_3 / H2O2 Blank		
97	$KMnO_4$ Blank		
	HNO_3 / HCl Blank		

Distribution: Methum - Locke
Project No.: 1621-8-7
Sample Date: 6-8-05

Location: SCRI Task: _____ Test: 4 Operator: Jim

Sample ID	Bottle #	Description	Initial Vol mL	Rinse Vol mL	Gain mL	Final Vol mL	ppb Hg	Total ug of Hg
	S	Filter/Solids						
98	1A	Probe & Filter Rinse				102		
99	1B	Heated Line Rinse				107		
100	2	KCl Impingers	300	150	93	543		
101	3	HNO_3/H_2O_2 Impinger	100	75	1	176		
102	4	$KMnO_4$ Impingers	200	50	0	250		
103	5	$KMnO_4$ Acid Rinse		100		100		

Filter Gross wt: 10.4776 g 6 Filter Net wt: 8.9137 g
Filter Tare wt: 1.5639 g Probe/Line Rinse wt: 0 g Condensate Total: 102.0 ml
Filter Net wt: 8.9137 g Total Particulate wt: 8.9137 g

Recovered By: Jm Date: 6-8-05

Location: SCRO Task: _____ Test: 4 Operator: Bruce

Sample ID	Bottle #	Description	Initial Vol mL	Rinse Vol mL	Gain mL	Final Vol mL	ppb Hg	Total ug of Hg
	S	Filter/Solids						
104	1A	Probe & Filter Rinse				101		
105	1B	Heated Line Rinse				141		
106	2	KCl Impingers	300	150	94	544		
107	3	HNO_3/H_2O_2 Impinger	100	75	1	176		
108	4	$KMnO_4$ Impingers	200	50	Lost -25	225		
109	5	$KMnO_4$ Acid Rinse		100		100		

Filter Gross wt: 11.8507 g 42-43 Filter Net wt: 8.4228 g
Filter Tare wt: 3.4279 g Probe/Line Rinse wt: 0 g Condensate Total: 105.4 ml
Filter Net wt: 8.4228 g Total Particulate wt: 8.4228 g

Recovered By: Jm Date: 6-8-05

Location: AHO Task: _____ Test: 4 Operator: Gary

Sample ID	Bottle #	Description	Initial Vol mL	Rinse Vol mL	Gain mL	Final Vol mL	ppb Hg	Total ug of Hg
	S	Filter/Solids						
110	1A	Probe & Filter Rinse				179		
111	1B	Heated Line Rinse				126		
112	2	KCl Impingers	300	150	96	546		
113	3	HNO_3/H_2O_2 Impinger	100	75	0	175		
114	4	$KMnO_4$ Impingers	200	50	-1	249		
115	5	$KMnO_4$ Acid Rinse		100		100		

Filter Gross wt: 7.0780 g 16 Filter Net wt: 5.4451 g
Filter Tare wt: 1.6329 g Probe/Line Rinse wt: 0 g Condensate Total: 102.4 ml
Filter Net wt: 5.4451 g Total Particulate wt: 5.4451 g

Recovered By: Jm Date: 6-8-05

Distribution: Witham - Loche
Project No.: 1221-87-1
Sample Date: 6-8-05

Location: FGD Task: _____ Test: 4 Operator: Jeff

Sample ID	Bottle #	Description	Initial Vol mL	Rinse Vol mL	Gain mL	Final Vol mL	ppb Hg	Total ug of Hg
	S	Filter/Solids						
116	1A	Probe & Filter Rinse				181		
117	1B	Heated Line Rinse				167		
118	2	KCl Impingers	300	150	173	623		
119	3	HNO_3/H_2O_2 Impinger	100	75	0	175		
120	4	$KMnO_4$ Impingers	200	50	-4	246		
121	5	$KMnO_4$ Acid Rinse		100		100		

Filter Gross wt: 0.1679 g 25 Filter Net wt: 0.0188 g
Filter Tare wt: 0.1491 g Probe/Line Rinse wt: 0 g Condensate Total: 186.3 ml
Filter Net wt: 0.0188 g Total Particulate wt: 0.0188 g

Recovered By: Jw Date: 6-8-05

Location: Stack Task: _____ Test: 4 Operator: Keith

Sample ID	Bottle #	Description	Initial Vol mL	Rinse Vol mL	Gain mL	Final Vol mL	ppb Hg	Total ug of Hg
	S	Filter/Solids						
122	1	Probe & Filter Rinse				121		
123	2	KCl Impingers	300	150	298	748		
124	3	HNO_3/H_2O_2 Impinger	100	75	0	175		
125	4	$KMnO_4$ Impingers	200	50	-4	246		
126	5	$KMnO_4$ Acid Rinse		100		100		

Filter Gross wt: 0.4958 g 33 Filter Net wt: 0.0880 g
Filter Tare wt: 0.4078 g Probe/Line Rinse wt: 0 g Condensate Total: 308.1 ml
Filter Net wt: 0.0880 g Total Particulate wt: 0.0880 g

Recovered By: Jw Date: 6-8-05

Sample ID	Description	ppb Hg	Total ug of Hg
	3 in. Filter Blank		
	Thimble Blank		
	KCl Blank		
	HNO_3 / H2O2 Blank		
	$KMnO_4$ Blank		
	HNO_3 / HCl Blank		

Distribution: Westhum - Locke
Project No.: 1621-87-1
Sample Date: 6-8-05

Location: FGD Task: Blank Test: 4 Operator: Jeff

Sample ID	Bottle #	Description	Initial Vol mL	Rinse Vol mL	Gain mL	Final Vol mL	ppb Hg	Total ug of Hg
	S	Filter/Solids						
	1A	Probe & Filter Rinse						
	1B	Heated Line Rinse						
127	2	KCl Impingers	300	150		450		
128	3	HNO_3/H_2O_2 Impinger	100	75		175		
129	4	$KMnO_4$ Impingers	200	50		250		
130	5	$KMnO_4$ Acid Rinse		100		100		

Filter Gross wt: _____g Filter Net wt: _____g
Filter Tare wt: _____g Probe/Line Rinse wt: _____g Condensate Total: _____ml
Filter Net wt: _____g Total Particulate wt: _____g

Recovered By: Jw Date: 6-8-05

Location: Stack Task: _____ Test: _____ Operator: _____

Sample ID	Bottle #	Description	Initial Vol mL	Rinse Vol mL	Gain mL	Final Vol mL	ppb Hg	Total ug of Hg
	S	Filter/Solids						
	1	Probe & Filter Rinse						
	2	KCl Impingers						
	3	HNO_3/H_2O_2 Impinger						
	4	$KMnO_4$ Impingers						
	5	$KMnO_4$ Acid Rinse						

Filter Gross wt: _____g Filter Net wt: _____g
Filter Tare wt: _____g Probe/Line Rinse wt: _____g Condensate Total: _____ml
Filter Net wt: _____g Total Particulate wt: _____g

Recovered By: _____ Date: _____

Sample ID	Description	ppb Hg	Total ug of Hg
	3 in. Filter Blank		
	Thimble Blank		
	KCl Blank		
	HNO_3 / H2O2 Blank		
131	$KMnO_4$ Blank		
	HNO_3 / HCl Blank		

Distribution: Witham - Locke
Project No.: 1621-87-1
Sample Date: 6-9-05

Location: SCRI Task: _____ Test: 5 Operator: Jim

Sample ID	Bottle #	Description	Initial Vol mL	Rinse Vol mL	Gain mL	Final Vol mL	ppb Hg	Total ug of Hg
	S	Filter/Solids						
132	1A	Probe & Filter Rinse				134		
133	1B	Heated Line Rinse				114		
134	2	KCl Impingers	300	150	104	554		
135	3	HNO_3/H_2O_2 Impinger	100	75	0	175		
136	4	$KMnO_4$ Impingers	200	50	-1	249		
137	5	$KMnO_4$ Acid Rinse		100		100		

Filter Gross wt: 13.6523 g 34-37 Filter Net wt: 10.2741 g
Filter Tare wt: 3.3782 g Probe/Line Rinse wt: 0 g Condensate Total: 110.9 ml
Filter Net wt: 10.2741 g Total Particulate wt: 10.2741 g

Recovered By: Jm Date: 6-9-05

Location: SCRO Task: _____ Test: 5 Operator: Bruce

Sample ID	Bottle #	Description	Initial Vol mL	Rinse Vol mL	Gain mL	Final Vol mL	ppb Hg	Total ug of Hg
	S	Filter/Solids						
138	1A	Probe & Filter Rinse				94		
139	1B	Heated Line Rinse				155		
140	2	KCl Impingers	300	150	86	536		
141	3	HNO_3/H_2O_2 Impinger	100	75	0	175		
142	4	$KMnO_4$ Impingers	200	50	-2	248		
143	5	$KMnO_4$ Acid Rinse		100		100		

Filter Gross wt: 10.1569 g 44-45 Filter Net wt: 6.7506 g
Filter Tare wt: 3.4063 g Probe/Line Rinse wt: 0.1690 g Condensate Total: 91.9 ml
Filter Net wt: 6.7506 g Total Particulate wt: 6.9196 g

Recovered By: Jm Date: 6-9-05

Location: AHO Task: _____ Test: 5 Operator: Gary

Sample ID	Bottle #	Description	Initial Vol mL	Rinse Vol mL	Gain mL	Final Vol mL	ppb Hg	Total ug of Hg
	S	Filter/Solids						
144	1A	Probe & Filter Rinse				177		
145	1B	Heated Line Rinse				122		
146	2	KCl Impingers	300	150	109	559		
147	3	HNO_3/H_2O_2 Impinger	100	75	0	175		
148	4	$KMnO_4$ Impingers	200	50	-1	249		
149	5	$KMnO_4$ Acid Rinse		100		100		

Filter Gross wt: 7.5693 g 17 Filter Net wt: 6.0017 g
Filter Tare wt: 1.5676 g Probe/Line Rinse wt: 0 g Condensate Total: 114.5 ml
Filter Net wt: 6.0017 g Total Particulate wt: 6.0017 g

Recovered By: Jm Date: 6-9-05

Distribution: Hitchum - Locke
Project No.: 1621-87-1
Sample Date: 6-9-05

Location: FGD Task: _____ Test: 5 Operator: Jeff

Sample ID	Bottle #	Description	Initial Vol mL	Rinse Vol mL	Gain mL	Final Vol mL	ppb Hg	Total ug of Hg
	S	Filter/Solids						
150	1A	Probe & Filter Rinse				155		
151	1B	Heated Line Rinse				159		
152	2	KCl Impingers	300	150	177	627		
153	3	HNO_3/H_2O_2 Impinger	100	75	0	175		
154	4	$KMnO_4$ Impingers	200	50	-4	246		
155	5	$KMnO_4$ Acid Rinse		100		100		

Filter Gross wt: 0.1784 g 26 Filter Net wt: 0.0311 g
Filter Tare wt: 0.1473 g Probe/Line Rinse wt: 0 g Condensate Total: 188.8 ml
Filter Net wt: 0.0311 g Total Particulate wt: 0.0311 g

Recovered By: Jr Date: 6-9-05

Location: Stack Task: _____ Test: 5 Operator: Keith

Sample ID	Bottle #	Description	Initial Vol mL	Rinse Vol mL	Gain mL	Final Vol mL	ppb Hg	Total ug of Hg
	S	Filter/Solids						
156	1	Probe & Filter Rinse				123		
157	2	KCl Impingers	300	150	293	743		
158	3	HNO_3/H_2O_2 Impinger	100	75	2	177		
159	4	$KMnO_4$ Impingers	200	50	-2	248		
160	5	$KMnO_4$ Acid Rinse		100		100		

Filter Gross wt: 0.4714 g 34 Filter Net wt: 0.0698 g
Filter Tare wt: 0.4016 g Probe/Line Rinse wt: 0 g Condensate Total: 308.2 ml
Filter Net wt: 0.0698 g Total Particulate wt: 0.0698 g

Recovered By: Jr Date: 6-9-05

Sample ID	Description	ppb Hg	Total ug of Hg
	3 in. Filter Blank		
	Thimble Blank		
	KCl Blank		
	HNO_3 / H2O2 Blank		
161	$KMnO_4$ Blank		
	HNO_3 / HCl Blank		

Distribution: Nitkum - Locke
Project No.: 1621-87-1
Sample Date: 6-9-05

Location: SCRI Task: _____ Test: 6 Operator: Jerm

Sample ID	Bottle #	Description	Initial Vol mL	Rinse Vol mL	Gain mL	Final Vol mL	ppb Hg	Total ug of Hg
	S	Filter/Solids						
162	1A	Probe & Filter Rinse				129		
163	1B	Heated Line Rinse				100		
164	2	KCl Impingers	300	150	106	556		
165	3	HNO_3/H_2O_2 Impinger	100	75	0	175		
166	4	$KMnO_4$ Impingers	200	50	0	250		
167	5	$KMnO_4$ Acid Rinse		100		100		

Filter Gross wt: 12.8106 g 38-39 Filter Net wt: 9.4205 g
Filter Tare wt: 3.3901 g Probe/Line Rinse wt: 0 g Condensate Total: 113.7 ml
Filter Net wt: 9.4205 g Total Particulate wt: 9.4205 g

Recovered By: Jr Date: 6-9-05

Location: SCRO Task: _____ Test: 6 Operator: Bruce

Sample ID	Bottle #	Description	Initial Vol mL	Rinse Vol mL	Gain mL	Final Vol mL	ppb Hg	Total ug of Hg
	S	Filter/Solids						
168	1A	Probe & Filter Rinse				97		
169	1B	Heated Line Rinse				157		
170	2	KCl Impingers	300	150	88	538		
171	3	HNO_3/H_2O_2 Impinger	100	75	0	175		
172	4	$KMnO_4$ Impingers	200	50	0	250		
173	5	$KMnO_4$ Acid Rinse		100		100		

Filter Gross wt: 10.2395 g 46-47 Filter Net wt: 6.8748 g
Filter Tare wt: 3.3647 g Probe/Line Rinse wt: 0 g Condensate Total: 95.9 ml
Filter Net wt: 6.8748 g Total Particulate wt: 6.8748 g

Recovered By: Jr Date: 6-9-05

Location: AHO Task: _____ Test: 6 Operator: Gary

Sample ID	Bottle #	Description	Initial Vol mL	Rinse Vol mL	Gain mL	Final Vol mL	ppb Hg	Total ug of Hg
	S	Filter/Solids						
174	1A	Probe & Filter Rinse				159		
175	1B	Heated Line Rinse				116		
176	2	KCl Impingers	300	150	103	553		
177	3	HNO_3/H_2O_2 Impinger	100	75	0	175		
178	4	$KMnO_4$ Impingers	200	50	-1	249		
179	5	$KMnO_4$ Acid Rinse		100		100		

Filter Gross wt: 5.6584 g 18 Filter Net wt: 3.9482 g
Filter Tare wt: 1.7102 g Probe/Line Rinse wt: 0 g Condensate Total: 108.0 ml
Filter Net wt: 3.9482 g Total Particulate wt: 3.9482 g

Recovered By: Jr Date: 6-9-05

Distribution: Witherum - Locke
Project No.: 1621- 87-1
Sample Date: 6-9-05

Location: FGD Task: _____ Test: 6 Operator: Jeff

Sample ID	Bottle #	Description	Initial Vol mL	Rinse Vol mL	Gain mL	Final Vol mL	ppb Hg	Total ug of Hg
	S	Filter/Solids						
180	1A	Probe & Filter Rinse				119		
181	1B	Heated Line Rinse				172		
182	2	KCl Impingers	300	150	155	605		
183	3	HNO_3/H_2O_2 Impinger	100	75	0	175		
184	4	$KMnO_4$ Impingers	200	50	-1	249		
185	5	$KMnO_4$ Acid Rinse		100		100		

Filter Gross wt: 0.1637 g 27 Filter Net wt: 0.0147 g
Filter Tare wt: 0.1490 g Probe/Line Rinse wt: 0 g Condensate Total: 169.4 ml
Filter Net wt: 0.0147 g Total Particulate wt: 0.0147 g

Recovered By: Jr Date: 6-9-05

Location: Stack Task: _____ Test: 6 Operator: Keith

Sample ID	Bottle #	Description	Initial Vol mL	Rinse Vol mL	Gain mL	Final Vol mL	ppb Hg	Total ug of Hg
	S	Filter/Solids						
186	1	Probe & Filter Rinse				175		
187	2	KCl Impingers	300	150	273	723		
188	3	HNO_3/H_2O_2 Impinger	100	75	2	177		
189	4	$KMnO_4$ Impingers	200	50	-3	247		
190	5	$KMnO_4$ Acid Rinse		100		100		

Filter Gross wt: 0.4290 g 35 Filter Net wt: 0.0267 g
Filter Tare wt: 0.4023 g Probe/Line Rinse wt: 0 g Condensate Total: 282.4 ml
Filter Net wt: 0.0267 g Total Particulate wt: 0.0267 g

Recovered By: Jr Date: 6-9-05

Sample ID	Description	ppb Hg	Total ug of Hg
	3 in. Filter Blank		
	Thimble Blank		
	KCl Blank		
	HNO_3 / H2O2 Blank		
	$KMnO_4$ Blank		
	HNO_3 / HCl Blank		

Distribution: Witham - Locke
Project No.: 1621-87-1
Sample Date: 6-9-05

Location: Stack Task: Blank Test: 6 Operator: Keith

Sample ID	Bottle #	Description	Initial Vol mL	Rinse Vol mL	Gain mL	Final Vol mL	ppb Hg	Total ug of Hg
	S	Filter/Solids						
	1A	Probe & Filter Rinse						
	1B	Heated Line Rinse						
191	2	KCl Impingers	300	150		450		
192	3	HNO_3/H_2O_2 Impinger	100	75		175		
193	4	$KMnO_4$ Impingers	200	50		250		
194	5	$KMnO_4$ Acid Rinse		100		100		

Filter Gross wt: _____ g Filter Net wt: _____ g
Filter Tare wt: _____ g Probe/Line Rinse wt: _____ g Condensate Total: _____ ml
Filter Net wt: _____ g Total Particulate wt: _____ g

Recovered By: Jr Date: 6-9-05

Location: Stack Task: _____ Test: _____ Operator: _____

Sample ID	Bottle #	Description	Initial Vol mL	Rinse Vol mL	Gain mL	Final Vol mL	ppb Hg	Total ug of Hg
	S	Filter/Solids						
	1	Probe & Filter Rinse						
	2	KCl Impingers						
	3	HNO_3/H_2O_2 Impinger						
	4	$KMnO_4$ Impingers						
	5	$KMnO_4$ Acid Rinse						

Filter Gross wt: _____ g Filter Net wt: _____ g
Filter Tare wt: _____ g Probe/Line Rinse wt: _____ g Condensate Total: _____ ml
Filter Net wt: _____ g Total Particulate wt: _____ g

Recovered By: _____ Date: _____

Sample ID	Description	ppb Hg	Total ug of Hg
	3 in. Filter Blank		
	Thimble Blank		
	KCl Blank		
	HNO_3 / H2O2 Blank		
195	$KMnO_4$ Blank		
	HNO_3 / HCl Blank		

ANALNUM	DATE	DESCR	SAMPLE	HG (ng/mL)
20052312	6/15/2005	PROBE & FILTER RINSE	1	<1.0
20052313	6/15/2005	HEATED LINE RINSE	2	<1.0
20052314	6/15/2005	KCL IMPINGER	3	19.5
20052315	6/15/2005	HNO3/H2O2 IMPINGER	4	1.1
20052316	6/15/2005	KMNO4 IMPINGER	5	26.2
20052317	6/15/2005	KMNO4 ACID RINSE	6	<1.0
20052318	6/15/2005	PROBE & FILTER RINSE	7	1.5
20052319	6/15/2005	HEATED LINE RINSE	8	<1.0
20052320	6/15/2005	KCL IMPINGER	9	2.7
20052321	6/15/2005	HNO3/H2O2 IMPINGER	10	<1.0
20052322	6/15/2005	KMNO4 IMPINGER	11	57.6
20052323	6/15/2005	KMNO4 ACID RINSE	12	<1.0
20052324	6/15/2005	PROBE & FILTER RINSE	13	<1.0
20052325	6/15/2005	HEATED LINE RINSE	14	<1.0
20052326	6/15/2005	KCL IMPINGER	15	21.1
20052327	6/15/2005	HNO3/H2O2 IMPINGER	16	1.5
20052328	6/15/2005	KMNO4 IMPINGER	17	3.8
20052329	6/15/2005	KMNO4 ACID RINSE	18	<1.0
20052330	6/15/2005	PROBE & FILTER RINSE	19	1.9
20052331	6/15/2005	HEATED LINE RINSE	20	<1.0
20052332	6/15/2005	KCL IMPINGER	21	40.3
20052333	6/15/2005	HNO3/H2O2 IMPINGER	22	<1.0
20052334	6/15/2005	KMNO4 IMPINGER	23	4.7
20052335	6/15/2005	KMNO4 ACID RINSE	24	<1.0
20052336	6/15/2005	PROBE & FILTER RINSE	25	12.0
20052337	6/15/2005	KCL IMPINGER	26	4.0
20052338	6/15/2005	HNO3/H2O2 IMPINGER	27	<1.0
20052339	6/15/2005	KMNO4 IMPINGER	28	11.0
20052340	6/15/2005	KMNO4 ACID RINSE	29	<1.0
20052341	6/15/2005	KCL BLANK	30	<0.2
20052342	6/15/2005	HNO3/H2O2 BLANK	31	<1.0
20052343	6/15/2005	KMNO4 BLANK	32	<0.2
20052344	6/15/2005	HNO3/HCL BLANK	33	<1.0
20052345	6/15/2005	PROBE & FILTER RINSE	34	<1.0
20052346	6/15/2005	HEATED LINE RINSE	35	<1.0
20052347	6/15/2005	KCL IMPINGER	36	14.1
20052348	6/15/2005	HNO3/H2O2 IMPINGER	37	2.9
20052349	6/15/2005	KMNO4 IMPINGER	38	15.1
20052350	6/15/2005	KMNO4 ACID RINSE	39	<1.0
20052351	6/15/2005	PROBE & FILTER RINSE	40	<1.0
20052352	6/15/2005	HEATED LINE RINSE	41	<1.0
20052353	6/15/2005	KCL IMPINGER	42	4.1
20052354	6/15/2005	HNO3/H2O2 IMPINGER	43	1.8
20052355	6/15/2005	KMNO4 IMPINGER	44	29.4
20052356	6/15/2005	KMNO4 ACID RINSE	45	<1.0
20052357	6/15/2005	PROBE & FILTER RINSE	46	<1.0
20052358	6/15/2005	HEATED LINE RINSE	47	<1.0
20052359	6/15/2005	KCL IMPINGER	48	19.4
20052360	6/15/2005	HNO3/H2O2 IMPINGER	49	<1.0
20052361	6/15/2005	KMNO4 IMPINGER	50	3.3
20052362	6/15/2005	KMNO4 ACID RINSE	51	<1.0

20052363	6/15/2005	PROBE & FILTER RINSE	52	1.4
20052364	6/15/2005	HEATED LINE RINSE	53	<1.0
20052365	6/15/2005	KCL IMPINGER	54	42.0
20052366	6/15/2005	HNO3/H2O2 IMPINGER	55	<1.0
20052367	6/15/2005	KMNO4 IMPINGER	56	6.6
20052368	6/15/2005	KMNO4 ACID RINSE	57	<1.0
20052369	6/15/2005	PROBE & FILTER RINSE	58	6.9
20052370	6/15/2005	KCL IMPINGER	59	1.8
20052371	6/15/2005	HNO3/H2O2 IMPINGER	60	<1.0
20052372	6/15/2005	KMNO4 IMPINGER	61	10.0
20052373	6/15/2005	KMNO4 ACID RINSE	62	<1.0
20052374	6/15/2005	KCL IMPINGER	63	<0.2
20052375	6/15/2005	HNO3/H2O2 IMPINGER	64	<1.0
20052376	6/15/2005	KMNO4 IMPINGER	65	<0.2
20052377	6/15/2005	KMNO4 ACID RINSE	66	<1.0
20052378	6/15/2005	KMNO4 BLANK	67	<0.2
20052379	6/15/2005	PROBE & FILTER RINSE	68	<1.0
20052380	6/15/2005	HEATED LINE RINSE	69	<1.0
20052381	6/15/2005	KCL IMPINGER	70	11.3
20052382	6/15/2005	HNO3/H2O2 IMPINGER	71	1.6
20052383	6/15/2005	KMNO4 IMPINGER	72	19.6
20052384	6/15/2005	KMNO4 ACID RINSE	73	<1.0
20052385	6/15/2005	PROBE & FILTER RINSE	74	<1.0
20052386	6/15/2005	HEATED LINE RINSE	75	<1.0
20052387	6/15/2005	KCL IMPINGER	76	4.5
20052388	6/15/2005	HNO3/H2O2 IMPINGER	77	2.8
20052389	6/15/2005	KMNO4 IMPINGER	78	28.3
20052390	6/15/2005	KMNO4 ACID RINSE	79	<1.0
20052391	6/15/2005	PROBE & FILTER RINSE	80	<1.0
20052392	6/15/2005	HEATED LINE RINSE	81	<1.0
20052393	6/15/2005	KCL IMPINGER	82	31.3
20052394	6/15/2005	HNO3/H2O2 IMPINGER	83	<1.0
20052395	6/15/2005	KMNO4 IMPINGER	84	1.5
20052396	6/15/2005	KMNO4 ACID RINSE	85	<1.0
20052397	6/15/2005	PROBE & FILTER RINSE	86	<1.0
20052398	6/15/2005	HEATED LINE RINSE	87	<1.0
20052399	6/15/2005	KCL IMPINGER	88	40.4
20052400	6/15/2005	HNO3/H2O2 IMPINGER	89	2.0
20052401	6/15/2005	KMNO4 IMPINGER	90	10.5
20052402	6/15/2005	KMNO4 ACID RINSE	91	<1.0
20052403	6/15/2005	PROBE & FILTER RINSE	92	7.2
20052404	6/15/2005	KCL IMPINGER	93	2.7
20052405	6/15/2005	HNO3/H2O2 IMPINGER	94	<1.0
20052406	6/15/2005	KMNO4 IMPINGER	95	10.1
20052407	6/15/2005	KMNO4 ACID RINSE	96	<1.0
20052408	6/15/2005	KMNO4 BLANK	97	<0.2
20052409	6/15/2005	PROBE & FILTER RINSE	98	<1.0
20052410	6/15/2005	HEATED LINE RINSE	99	<1.0
20052411	6/15/2005	KCL IMPINGER	100	16.1
20052412	6/15/2005	HNO3/H2O2 IMPINGER	101	2.9
20052413	6/15/2005	KMNO4 IMPINGER	102	16.2
20052414	6/15/2005	KMNO4 ACID RINSE	103	<1.0

20052415	6/15/2005	PROBE & FILTER RINSE	104	<1.0
20052416	6/15/2005	HEATED LINE RINSE	105	<1.0
20052417	6/15/2005	KCL IMPINGER	106	5.3
20052418	6/15/2005	HNO3/H2O2 IMPINGER	107	3.9
20052419	6/15/2005	KMNO4 IMPINGER	108	38.1
20052420	6/15/2005	KMNO4 ACID RINSE	109	<1.0
20052421	6/15/2005	PROBE & FILTER RINSE	110	<1.0
20052422	6/15/2005	HEATED LINE RINSE	111	<1.0
20052423	6/15/2005	KCL IMPINGER	112	25.6
20052424	6/15/2005	HNO3/H2O2 IMPINGER	113	<1.0
20052425	6/15/2005	KMNO4 IMPINGER	114	2.8
20052426	6/15/2005	KMNO4 ACID RINSE	115	<1.0
20052427	6/15/2005	PROBE & FILTER RINSE	116	<1.0
20052428	6/15/2005	HEATED LINE RINSE	117	5.6
20052429	6/15/2005	KCL IMPINGER	118	36.7
20052430	6/15/2005	HNO3/H2O2 IMPINGER	119	4.4
20052431	6/15/2005	KMNO4 IMPINGER	120	7.4
20052432	6/15/2005	KMNO4 ACID RINSE	121	<1.0
20052433	6/15/2005	PROBE & FILTER RINSE	122	7.4
20052434	6/15/2005	KCL IMPINGER	123	1.4
20052435	6/15/2005	HNO3/H2O2 IMPINGER	124	<1.0
20052436	6/15/2005	KMNO4 IMPINGER	125	12.3
20052437	6/15/2005	KMNO4 ACID RINSE	126	<1.0
20052438	6/15/2005	KCL IMPINGER	127	<0.2
20052439	6/15/2005	HNO3/H202 IMPINGER	128	<1.0
20052440	6/15/2005	KMNO4 IMPINGER	129	<0.2
20052441	6/15/2005	KMNO4 ACID RINSE	130	<1.0
20052442	6/15/2005	KMNO4 BLANK	131	<0.2
20052443	6/15/2005	PROBE & FILTER RINSE	132	<1.0
20052444	6/15/2005	HEATED LINE RINSE	133	<1.0
20052445	6/15/2005	KCL IMPINGER	134	9.1
20052446	6/15/2005	HNO3/H2O2 IMPINGER	135	4.2
20052447	6/15/2005	KMNO4 IMPINGER	136	32.3
20052448	6/15/2005	KMNO4 ACID RINSE	137	<1.0
20052449	6/15/2005	PROBE & FILTER RINSE	138	<1.0
20052450	6/15/2005	HEATED LINE RINSE	139	<1.0
20052451	6/15/2005	KCL IMPINGER	140	3.2
20052452	6/15/2005	HNO3/H2O2 IMPINGER	141	4.2
20052453	6/15/2005	KMNO4 IMPINGER	142	36.4
20052454	6/15/2005	KMNO4 ACID RINSE	143	<1.0
20052455	6/15/2005	PROBE & FILTER RINSE	144	<1.0
20052456	6/15/2005	HEATED LINE RINSE	145	<1.0
20052457	6/15/2005	KCL IMPINGER	146	28.9
20052458	6/15/2005	HNO3/H2O2 IMPINGER	147	<1.0
20052459	6/15/2005	KMNO4 IMPINGER	148	1.2
20052460	6/15/2005	KMNO4 ACID RINSE	149	<1.0
20052461	6/15/2005	PROBE & FILTER RINSE	150	1.8
20052462	6/15/2005	HEATED LINE RINSE	151	1.4
20052463	6/15/2005	KCL IMPINGER	152	38.5
20052464	6/15/2005	HNO3/H2O2 IMPINGER	153	4.1
20052465	6/15/2005	KMNO4 IMPINGER	154	13.2
20052466	6/15/2005	KMNO4 ACID RINSE	155	<1.0

20052467	6/15/2005	PROBE & FILTER RINSE	156	3.2
20052468	6/15/2005	KCL IMPINGER	157	2.3
20052469	6/15/2005	HNO3/H2O2 IMPINGER	158	<1.0
20052470	6/15/2005	KMNO4 IMPINGER	159	6.6
20052471	6/15/2005	KMNO4 ACID RINSE	160	<1.0
20052472	6/15/2005	KMNO4 BLANK	161	<0.2
20052473	6/15/2005	PROBE & FILTER RINSE	162	<1.0
20052474	6/15/2005	HEATED LINE RINSE	163	<1.0
20052475	6/15/2005	KCL IMPINGER	164	9.7
20052476	6/15/2005	HNO3/H2O2 IMPINGER	165	4.2
20052477	6/15/2005	KMNO4 IMPINGER	166	21.6
20052478	6/15/2005	KMNO4 ACID RINSE	167	<1.0
20052479	6/15/2005	PROBE & FILTER RINSE	168	<1.0
20052480	6/15/2005	HEATED LINE RINSE	169	<1.0
20052481	6/15/2005	KCL IMPINGER	170	8.8
20052482	6/15/2005	HNO3/H2O2 IMPINGER	171	3.3
20052483	6/15/2005	KMNO4 IMPINGER	172	43.4
20052484	6/15/2005	KMNO4 ACID RINSE	173	<1.0
20052485	6/15/2005	PROBE & FILTER RINSE	174	<1.0
20052486	6/15/2005	HEATED LINE RINSE	175	<1.0
20052487	6/15/2005	KCL IMPINGER	176	28.6
20052488	6/15/2005	HNO3/H2O2 IMPINGER	177	<1.0
20052489	6/15/2005	KMNO4 IMPINGER	178	1.1
20052490	6/15/2005	KMNO4 ACID RINSE	179	<1.0
20052491	6/15/2005	PROBE & FILTER RINSE	180	<1.0
20052492	6/15/2005	HEATED LINE RINSE	181	<1.0
20052493	6/15/2005	KCL IMPINGER	182	40.2
20052494	6/15/2005	HNO3/H2O2 IMPINGER	183	9.0
20052495	6/15/2005	KMNO4 IMPINGER	184	2.8
20052496	6/15/2005	KMNO4 ACID RINSE	185	<1.0
20052497	6/15/2005	PROBE & FILTER RINSE	186	12.2
20052498	6/15/2005	KCL IMPINGER	187	1.8
20052499	6/15/2005	HNO3/H2O2 IMPINGER	188	<1.0
20052500	6/15/2005	KMNO4 IMPINGER	189	8.7
20052501	6/15/2005	KMNO4 ACID RINSE	190	<1.0
20052502	6/15/2005	KCL IMPINGER	191	<0.2
20052503	6/15/2005	HNO3/H2O2 IMPINGER	192	<1.0
20052504	6/15/2005	KMNO4 IMPINGER	193	<0.2
20052505	6/15/2005	KMNO4 ACID RINSE	194	<1.0
20052506	6/15/2005	KMNO4 BLANK	195	<0.2

			Hg	
20052280	SCR INLET THIMBLE FILTER NOS. 1&2	SCRI-1	<.004	ppm
20052281	SCR OUTLET THIMBLE FILTER NOS. 7&8	SCRO-1	<.004	ppm
20052282	ESP INLET THIMBLE FILTER NO. 13	ESP-1	0.064	ppm
20052283	SCR INLET THIMBLE FILTER NOS. 3&4	SCRI-2	<.004	ppm
20052284	SCR OUTLET THIMBLE FILTER NOS. 9&10	SCRO-2	<.004	ppm
20052285	ESP INLET THIMBLE FILTER NO. 14	ESP-2	0.024	ppm
20052286	SCR INLET THIMBLE FILTER NO. 5	SCRI-3	<.004	ppm
20052287	SCR OUTLET THIMBLE FILTER NOS. 11&12	SCRO-3	<.004	ppm
20052288	ESP INLET THIMBLE FILTER NO. 15	ESP-3	.022	ppm
20052289	SCR INLET THIMBLE FILTER NO. 6	SCRI-4	<.004	ppm
20052290	SCR OUTLET THIMBLE FILTER NOS. 42&43	SCRO-4	<.004	ppm
20052291	ESP INLET THIMBLE FILTER NO. 16	ESP-4	.025	ppm
20052292	SCR INLET THIMBLE FILTER NOS. 36&37	SCRI-5	<.004	ppm
20052293	SCR OUTLET THIMBLE FILTER NOS. 44&45	SCRO-5	<.004	ppm
20052294	ESP INLET THIMBLE FILTER NO. 17	ESP-5	0.052	ppm
20052295	SCR INLET THIMBLE FILTER NOS. 38&39	SCRI-6	<.004	ppm
20052296	SCR OUTLET THIMBLE FILTER NOS. 46&47	SCRO-6	<.004	ppm
20052297	ESP INLET THIMBLE FILTER NO. 18	ESP-6	.035	ppm
20052298	48-MM FILTER BLANK	47-BLN	<5.0	ng/filter
20052299	3-IN FILTER BLANK	3-BLN	<5.0	ng/filter
20052300	THIMBLE BLANK	THM-BLN	<.005	ppm
20052301	48-MM FILTER FGD INLET FILTER NO. 21	FGD-1	67.9	ng/filter
20052302	3-IN FILTER STACK FILTER NO. 30	STK-1	14.3	ng/filter
20052303	47-MM FILTER FGD INLET FILTER NO. 22	FGD-2	2.3	ng/filter
20052304	3-IN FILTER STACK FILTER NO. 31	STK-2	<5.0	ng/filter
20052305	3-IN FILTER STACK FILTER NO. 32	STK-3	7.9	ng/filter
20052306	47-MM FILTER FGD INLET FILTER NO. 25	FGD-4	<5.0	ng/filter
20052307	3-IN FILTER STACK FILTER NO. 33	STK-4	<5.0	ng/filter
20052308	47-MM FILTER FGD INLET FILTER NO. 26	FGD-5	<5.0	ng/filter
20052309	3-IN FILTER STACK FILTER NO. 34	STK-5	<5.0	ng/filter
20052310	47-MM FILTER FGD INLET FILTER NO. 27	FGD-6	<5.0	ng/filter
20052311	3-IN FILTER STACK FILTER NO. 35	STK-6	148.2	ng/filter

APPENDIX D

Process Material Data

- Coal Analysis Data Sheets
- Bottom Ash Analysis Data Sheets
- Limestone Slurry Solids Analysis Data Sheets
- Limestone Slurry Filtrate Analysis Data Sheets
- Ash Analysis Data Sheets
- FGD Slurry Solids Analysis Data Sheets
- FGD Slurry Filtrate Data Sheets
- FGD Makeup Water Analysis Data Sheets

CONSOLENERGY

Research and Development
www.consolenergy.com
4000 Brownsville Rd.
South Park, PA 15129

Sample Description.: COAL BEGINNING OF TEST
Sample No.: COAL3
Date Received: 06/21/2005
Date Completed: 07/28/2005

Analytical No.: 20052579
Project No.: 1621 -087 -000
Submitted By: JAW/SCT/JEL

Proximate (Dry)	Wt%
Ash	10.74
Volatile Matter	36.87
Fixed Carbon	52.39
BTU/lb	12910
MAF BTU/lb	14463

Ultimate (Dry)%	
Carbon	70.47
Hydrogen	5.31
Nitrogen	1.54
Chlorine	0.0375
Sulfur, Total	3.68
Ash	10.74
Oxygen (DIFF)	8.22

Ash Fusion Reducing Temp (F)	
Initial	
Softening	
Hemispherical.	
Fluid	

Ash Fusion Oxidizing	
Initial	
Softening	
Hemispherical.	
Fluid	

Trace Elements (ppm)	
Hg	0.110
F	

Major Ash Elem. (Ignited @750)	
SiO2	43.12
Al2O3	20.12
TiO2	0.94
Fe2O3	25.82
CaO	2.62
MgO	0.86
Na2O	0.37
K2O	1.99
P2O5	0.06
SO3	1.96
Undetermined	2.14

Total Moisture 12.02

Misc.	
Analysis	Value

Seive Analysis	
SIZE	WT %

Sulfur Forms (Dry)	
Pyritic Sulfur	
Sulfate	
Organic	
Sulfur, Total	3.68

HGI/FSI	
HGI	
FSI	

As Determined Moisture 6.69 %

These values have been reviewed and are approved for transmission.

CONSOLENERGY

Research and Development
www.consolenergy.com
4000 Brownsville Rd.
South Park, PA 15129

Sample Description.: COAL BEGINNING OF TEST
Sample No.: COAL4
Date Received: 06/21/2005
Date Completed: 07/28/2005

Analytical No.: 20052580
Project No.: 1621 -087 -000
Submitted By: JAW/SCT/JEL

Proximate (Dry)	Wt%
Ash	11.29
Volatile Matter	36.70
Fixed Carbon	52.01
BTU/lb	12773
MAF BTU/lb	14399

Ultimate (Dry)%	
Carbon	69.94
Hydrogen	5.27
Nitrogen	1.53
Chlorine	0.0458
Sulfur, Total	3.75
Ash	11.29
Oxygen (DIFF)	8.17

Ash Fusion Reducing Temp (F)	
Initial	
Softening	
Hemispherical.	
Fluid	

Ash Fusion Oxidizing	
Initial	
Softening	
Hemispherical.	
Fluid	

Trace Elements (ppm)	
Hg	0.123
F	

Major Ash Elem. (Ignited @750)	
SiO2	43.69
Al2O3	19.38
TiO2	0.91
Fe2O3	24.99
CaO	2.99
MgO	0.89
Na2O	0.40
K2O	2.00
P2O5	0.09
SO3	2.18
Undetermined	2.48
Total Moisture	13.03

Misc.	
Analysis	Value

Seive Analysis	
SIZE	WT %

Sulfur Forms (Dry)	
Pyritic Sulfur	
Sulfate	
Organic	
Sulfur, Total	3.75

HGI/FSI	
HGI	
FSI	

As Determined Moisture 6.13 %

These values have been reviewed and are approved for transmission.

CONSOLENERGY

Research and Development
www.consolenergy.com
4000 Brownsville Rd.
South Park, PA 15129

Sample Description.: COAL END OF TEST
Sample No.: COAL4
Date Received: 06/21/2005
Date Completed: 07/28/2005

Analytical No.: 20052581
Project No.: 1621 -087 -000
Submitted By: JAW/SCT/JEL

Proximate (Dry)	Wt%
Ash	10.59
Volatile Matter	36.74
Fixed Carbon	52.67
BTU/lb	12940
MAF BTU/lb	14473

Ultimate (Dry)%	
Carbon	70.15
Hydrogen	5.36
Nitrogen	1.52
Chlorine	0.0492
Sulfur, Total	3.45
Ash	10.59
Oxygen (DIFF)	8.88

Major Ash Elem. (Ignited @750)	
SiO2	44.47
Al2O3	19.41
TiO2	0.97
Fe2O3	22.79
CaO	2.94
MgO	0.91
Na2O	0.43
K2O	1.94
P2O5	0.05
SO3	1.88
Undetermined	4.21
Total Moisture	13.21

Sulfur Forms (Dry)	
Pyritic Sulfur	
Sulfate	
Organic	
Sulfur, Total	3.45

Ash Fusion Reducing Temp (F)	
Initial	
Softening	
Hemispherical.	
Fluid	

Ash Fusion Oxidizing	
Initial	
Softening	
Hemispherical.	
Fluid	

Misc.	
Analysis	Value

HGI/FSI	
HGI	
FSI	

Trace Elements (ppm)	
Hg	0.114
F	

Seive Analysis	
SIZE	WT %

As Determined Moisture 6.535 %

These values have been reviewed and are approved for transmission.

CONSOLENERGY

Research and Development
www.consolenergy.com
4000 Brownsville Rd.
South Park, PA 15129

Sample Description.: COAL BEGINNING OF TEST
Sample No.: COAL5
Date Received: 06/21/2005
Date Completed: 07/28/2005

Analytical No.: 20052582
Project No.: 1621 -087 -000
Submitted By: JAW/SCT/JEL

Proximate (Dry)	Wt%
Ash	11.22
Volatile Matter	36.65
Fixed Carbon	52.13
BTU/lb	12799
MAF BTU/lb	14417

Ultimate (Dry)%	
Carbon	70.03
Hydrogen	5.09
Nitrogen	1.50
Chlorine	0.0598
Sulfur, Total	3.55
Ash	11.22
Oxygen (DIFF)	8.55

Major Ash Elem. (Ignited @750)	
SiO2	45.05
Al2O3	20.03
TiO2	0.94
Fe2O3	22.11
CaO	3.44
MgO	0.87
Na2O	0.39
K2O	1.96
P2O5	0.09
SO3	2.55
Undetermined	2.57

Total Moisture 14.11

Sulfur Forms (Dry)	
Pyritic Sulfur	
Sulfate	
Organic	
Sulfur, Total	3.55

Ash Fusion Reducing Temp (F)	
Initial	
Softening	
Hemispherical	
Fluid	

Ash Fusion Oxidizing	
Initial	
Softening	
Hemispherical	
Fluid	

Misc.	
Analysis	Value

HGI/FSI	
HGI	
FSI	

Trace Elements (ppm)	
Hg	0.114
F	

Seive Analysis	
SIZE	WT %

As Determined Moisture 6.31 %

These values have been reviewed and are approved for transmission.

CONSOLENERGY

Research and Development
www.consolenergy.com
4000 Brownsville Rd.
South Park, PA 15129

Sample Description.: COAL BEGINNING OF TEST
Sample No.: COAL6
Date Received: 06/21/2005
Date Completed: 07/28/2005

Analytical No.: 20052583
Project No.: 1621 -087 -000
Submitted By: JAW/SCT/JEL

Proximate (Dry)	Wt%
Ash	10.91
Volatile Matter	37.25
Fixed Carbon	51.84
BTU/lb	12835
MAF BTU/lb	14407

Ultimate (Dry)%	
Carbon	70.34
Hydrogen	5.09
Nitrogen	1.47
Chlorine	0.0813
Sulfur, Total	3.63
Ash	10.91
Oxygen (DIFF)	8.48

Ash Fusion Reducing Temp (F)	
Initial	
Softening	
Hemispherical.	
Fluid	

Ash Fusion Oxidizing	
Initial	
Softening	
Hemispherical.	
Fluid	

Trace Elements (ppm)	
Hg	0.107
F	

Major Ash Elem. (Ignited @750)	
SiO2	44.11
Al2O3	19.76
TiO2	0.95
Fe2O3	23.38
CaO	3.88
MgO	0.88
Na2O	0.47
K2O	1.94
P2O5	0.06
SO3	2.71
Undetermined	1.86
Total Moisture	13.32

Misc.	
Analysis	Value

Seive Analysis	
SIZE	WT %

Sulfur Forms (Dry)	
Pyritic Sulfur	
Sulfate	
Organic	
Sulfur, Total	3.63

HGI/FSI	
HGI	
FSI	

As Determined Moisture 5.94 %

These values have been reviewed and are approved for transmission.

CONSOLENERGY

Research and Development
www.consolenergy.com
4000 Brownsville Rd.
South Park, PA 15129

Sample Description.: COAL BEGINNING OF TEST
Sample No.: COAL1
Date Received: 06/21/2005
Date Completed: 07/28/2005

Analytical No.: 20052576
Project No.: 1621 -087 -000
Submitted By: JAW/SCT/JEL

Proximate (Dry)	Wt%
Ash	10.17
Volatile Matter	37.11
Fixed Carbon	52.72
BTU/lb	12984
MAF BTU/lb	14454

Ultimate (Dry)%	
Carbon	70.35
Hydrogen	5.28
Nitrogen	1.55
Chlorine	0.0491
Sulfur, Total	3.64
Ash	10.17
Oxygen (DIFF)	8.96

Ash Fusion Reducing Temp (F)	
Initial	
Softening	
Hemispherical.	
Fluid	

Ash Fusion Oxidizing	
Initial	
Softening	
Hemispherical.	
Fluid	

Trace Elements (ppm)	
Hg	0.120
F	

Major Ash Elem. (Ignited @750)	
SiO2	43.20
Al2O3	19.60
TiO2	0.93
Fe2O3	25.51
CaO	3.34
MgO	0.85
Na2O	0.43
K2O	2.02
P2O5	0.05
SO3	1.86
Undetermined	2.21

Total Moisture 12.22

Misc.	
Analysis	Value

Seive Analysis	
SIZE	WT %

Sulfur Forms (Dry)	
Pyritic Sulfur	
Sulfate	
Organic	
Sulfur, Total	3.64

HGI/FSI	
HGI	
FSI	

As Determined Moisture 6.37 %

These values have been reviewed and are approved for transmission.

CONSOLENERGY

Research and Development
www.consolenergy.com
4000 Brownsville Rd.
South Park, PA 15129

Sample Description.: COAL BEGINNING OF TEST
Sample No.: COAL2
Date Received: 06/21/2005
Date Completed: 07/28/2005

Analytical No.: 20052577
Project No.: 1621 -087 -000
Submitted By: JAW/SCT/JEL

Proximate (Dry)	Wt%
Ash	10.64
Volatile Matter	36.72
Fixed Carbon	52.64
BTU/lb	12927
MAF BTU/lb	14466

Ultimate (Dry)%	
Carbon	70.29
Hydrogen	5.32
Nitrogen	1.51
Chlorine	0.0144
Sulfur, Total	3.54
Ash	10.64
Oxygen (DIFF)	8.69

Ash Fusion Reducing Temp (F)	
Initial	
Softening	
Hemispherical.	
Fluid	

Ash Fusion Oxidizing	
Initial	
Softening	
Hemispherical.	
Fluid	

Trace Elements (ppm)	
Hg	0.110
F	

Major Ash Elem. (Ignited @750)	
SiO2	43.34
Al2O3	9.78
TiO2	1.00
Fe2O3	12.64
CaO	2.59
MgO	0.47
Na2O	0.50
K2O	1.04
P2O5	
SO3	0.84
Undetermined	27.80
Total Moisture	13.34

Misc.	
Analysis	Value

Seive Analysis	
SIZE	WT %

Sulfur Forms (Dry)	
Pyritic Sulfur	
Sulfate	
Organic	
Sulfur, Total	3.54

HGI/FSI	
HGI	
FSI	

As Determined Moisture 6.47 %

These values have been reviewed and are approved for transmission.

CONSOLENERGY

Research and Development
www.consolenergy.com
4000 Brownsville Rd.
South Park, PA 15129

Sample Description.: COAL END OF TEST
Sample No.: COAL2
Date Received: 06/21/2005
Date Completed: 06/27/2005

Analytical No.: 20052578
Project No.: 1621 -087 -000
Submitted By: JAW/SCT/JEL

Proximate (Dry)	Wt%
Ash	10.03
Volatile Matter	36.85
Fixed Carbon	53.12
BTU/lb	12967
MAF BTU/lb	14413

Ultimate (Dry)%	
Carbon	71.46
Hydrogen	5.32
Nitrogen	1.54
Chlorine	0.0437
Sulfur, Total	3.42
Ash	10.03
Oxygen (DIFF)	8.19

Ash Fusion Reducing Temp (F)	
Initial	
Softening	
Hemispherical.	
Fluid	

Ash Fusion Oxidizing	
Initial	
Softening	
Hemispherical.	
Fluid	

Trace Elements (ppm)	
Hg	0.102
F	

Major Ash Elem. (Ignited @750)	
SiO2	44.68
Al2O3	20.63
TiO2	0.98
Fe2O3	24.10
CaO	2.36
MgO	0.91
Na2O	0.41
K2O	2.02
P2O5	0.07
SO3	1.69
Undetermined	2.15
Total Moisture	12.40

Misc.	
Analysis	Value

Seive Analysis	
SIZE	WT %

Sulfur Forms (Dry)	
Pyritic Sulfur	
Sulfate	
Organic	
Sulfur, Total	3.42

HGI/FSI	
HGI	
FSI	

As Determined Moisture 6.25 %

These values have been reviewed and are approved for transmission.

CONSOLENERGY

Research and Development
www.consolenergy.com
4000 Brownsville Rd.
South Park, PA 15129

Sample Description.: COAL END OF TEST
Sample No.: COAL6
Date Received: 06/21/2005
Date Completed: 07/28/2005

Analytical No.: 20052584
Project No.: 1621 -087 -000
Submitted By: JAW/SCT/JEL

Proximate (Dry)	Wt%
Ash	10.90
Volatile Matter	36.90
Fixed Carbon	52.20
BTU/lb	12849
MAF BTU/lb	14421

Ash Fusion Reducing Temp (F)
Initial
Softening
Hemispherical.
Fluid

Trace Elements (ppm)
Hg 0.106
F

Ultimate (Dry)%
Carbon 70.32
Hydrogen 5.19
Nitrogen 1.52
Chlorine 0.0794
Sulfur, Total 3.59
Ash 10.90
Oxygen (DIFF) 8.40

Ash Fusion Oxidizing
Initial
Softening
Hemispherical.
Fluid

Major Ash Elem. (Ignited @750)	
SiO_2	44.77
Al_2O_3	19.95
TiO_2	0.95
Fe_2O_3	23.74
CaO	3.32
MgO	0.87
Na_2O	0.38
K_2O	1.90
P_2O_5	0.07
SO_3	2.15
Undetermined	1.90
Total Moisture	13.76

Misc.
Analysis Value

Seive Analysis	
SIZE	WT %

Sulfur Forms (Dry)
Pyritic Sulfur
Sulfate
Organic
Sulfur, Total 3.59

HGI/FSI
HGI
FSI

As Determined Moisture 6.19 %

These values have been reviewed and are approved for transmission.

CONSOLENERGY

Research and Development
www.consolenergy.com
4000 Brownsville Rd.
South Park, PA 15129

Sample Description.: **COAL COAL BELT**
Sample No.: COAL BELT
Date Received: 06/21/2005
Date Completed: 07/28/2005

Analytical No.: **20052585**
Project No.: 1621 -087 -000
Submitted By: JAW/SCT/JEL

Proximate (Dry)	Wt%
Ash	11.28
Volatile Matter	36.46
Fixed Carbon	52.26
BTU/lb	12782
MAF BTU/lb	14407

Ash Fusion Reducing Temp (F)	
Initial	
Softening	
Hemispherical.	
Fluid	

Trace Elements (ppm)	
Hg	0.106
F	

Ultimate (Dry)%	
Carbon	70.63
Hydrogen	5.07
Nitrogen	1.45
Chlorine	0.0749
Sulfur, Total	3.52
Ash	11.28
Oxygen (DIFF)	7.98

Ash Fusion Oxidizing	
Initial	
Softening	
Hemispherical.	
Fluid	

Major Ash Elem. (Ignited @750)	
SiO_2	44.02
Al_2O_3	19.67
TiO_2	0.93
Fe_2O_3	23.14
CaO	3.87
MgO	0.84
Na_2O	0.72
K_2O	1.83
P_2O_5	0.08
SO_3	2.83
Undetermined	2.07
Total Moisture	13.73

Misc.	
Analysis	Value

Seive Analysis	
SIZE	WT %

Sulfur Forms (Dry)	
Pyritic Sulfur	
Sulfate	
Organic	
Sulfur, Total	3.52

HGI/FSI	
HGI	
FSI	

As Determined Moisture 5.69 %

These values have been reviewed and are approved for transmission.

CONSOL ENERGY

Research and Development
www.consolenergy.com
4000 Brownsville Rd.
South Park, PA 15129

Sample Description.: **BOTTOM ASH SOLIDS DAY 1**
Sample No.: BOTTOM ASH-DAY 1
Date Received: 06/21/2005
Date Completed: 07/28/2005

Analytical No.: **20052586**
Project No.: 1621 -087 -000
Submitted By: JAW/SCT/JEL

Proximate (Dry)	Wt%
Ash	88.16
Volatile Matter	
Fixed Carbon	
BTU/lb	
MAF BTU/lb	

Ultimate (Dry)%	
Carbon	11.55
Hydrogen	
Nitrogen	
Chlorine	0.0019
Sulfur, Total	
Ash	88.16
Oxygen (DIFF)	

Ash Fusion Reducing Temp (F)	
Initial	
Softening	
Hemispherical.	
Fluid	

Ash Fusion Oxidizing	
Initial	
Softening	
Hemispherical.	
Fluid	

Trace Elements (ppm)	
Hg	<.004
F	

Major Ash Elem. (Dry)	
SiO2	36.17
Al2O3	16.76
TiO2	0.71
Fe2O3	30.09
CaO	3.29
MgO	0.70
Na2O	0.30
K2O	1.61
P2O5	<0.01
SO3	1.76
Undetermined	8.61

Total Moisture

Misc.	
Analysis	Value

Seive Analysis	
SIZE	WT %

Sulfur Forms (Dry)
Pyritic Sulfur
Sulfate
Organic
Sulfur, Total

HGI/FSI
HGI
FSI

As Determined Moisture 0.5 %

These values have been reviewed and are approved for transmission.

CONSOLENERGY

Research and Development
www.consolenergy.com
4000 Brownsville Rd.
South Park, PA 15129

Sample Description.: **BOTTOM ASH SOLIDS DAY 2**
Sample No.: BOTTOM ASH-DAY 2
Date Received: 06/21/2005
Date Completed: 07/28/2005

Analytical No.: **20052587**
Project No.: 1621 -087 -000
Submitted By: JAW/SCT/JEL

Proximate (Dry)	Wt%
Ash	
Volatile Matter	
Fixed Carbon	
BTU/lb	
MAF BTU/lb	

Ash Fusion Reducing Temp (F)	
Initial	
Softening	
Hemispherical.	
Fluid	

Trace Elements (ppm)	
Hg	
F	

Ultimate (Dry)%	
Carbon	
Hydrogen	
Nitrogen	
Chlorine	
Sulfur, Total	
Ash	
Oxygen (DIFF)	

Ash Fusion Oxidizing	
Initial	
Softening	
Hemispherical.	
Fluid	

Major Ash Elem. (AsDet)	
SiO2	31.36
Al2O3	14.44
TiO2	0.60
Fe2O3	24.07
CaO	2.88
MgO	0.62
Na2O	0.27
K2O	1.47
P2O5	<0.01
SO3	2.37
Undetermined	21.92

Misc.	
Analysis	Value

Seive Analysis	
SIZE	WT %

Total Moisture

Sulfur Forms (Dry)
Pyritic Sulfur
Sulfate
Organic
Sulfur, Total

HGI/FSI
HGI
FSI

As Determined Moisture 0 %

These values have been reviewed and are approved for transmission.

CONSOLENERGY

Research and Development
www.consolenergy.com
4000 Brownsville Rd.
South Park, PA 15129

Sample Description.: **BOTTOM ASH SOLIDS DAY 3**
Sample No.: BOTTOM ASH-DAY 3
Date Received: 06/21/2005
Date Completed: 07/28/2005

Analytical No.: **20052588**
Project No.: 1621 -087 -000
Submitted By: JAW/SCT/JEL

Proximate (Dry)	Wt%
Ash	
Volatile Matter	
Fixed Carbon	
BTU/lb	
MAF BTU/lb	

Ash Fusion Reducing Temp (F)	
Initial	
Softening	
Hemispherical.	
Fluid	

Trace Elements (ppm)	
Hg	
F	

Ultimate (Dry)%	
Carbon	
Hydrogen	
Nitrogen	
Chlorine	
Sulfur, Total	
Ash	
Oxygen (DIFF)	

Ash Fusion Oxidizing	
Initial	
Softening	
Hemispherical.	
Fluid	

Major Ash Elem. (AsDet)	
SiO2	32.83
Al2O3	14.34
TiO2	0.62
Fe2O3	24.89
CaO	3.48
MgO	0.65
Na2O	0.28
K2O	1.49
P2O5	<0.01
SO3	2.36
Undetermined	19.06

Misc.	
Analysis	Value

Seive Analysis	
SIZE	WT %

Total Moisture

Sulfur Forms (Dry)
Pyritic Sulfur
Sulfate
Organic
Sulfur, Total

HGI/FSI
HGI
FSI

As Determined Moisture 0 %

These values have been reviewed and are approved for transmission.

CONSOLENERGY
Research and Development
www.consolenergy.com
4000 Brownsville Rd.
South Park, PA 15129

BOTTOM ASH LIQUID DAY 3

Sample No.: BA LIQ DAY 3
Date Received: 06/22/2005
Date Completed: 08/24/2005

Analytical No.: **20052635**
Project No.: 1621 -087 -000

Submitter: JAW/SCT/JEL

Parameter	Water Result (mg/L unless noted otherwise) Value	Value	Units	Avg Value
pH				
Acidity, $CaCO_3$				
Alkalinity, $CaCO_3$				
Hydroxide, $CaCO_3$				
Carbonate, $CaCO_3$				
Bicarbonate, $CaCO_3$				
Total Suspended Solids				
Total Dissolved Solids				
Specific Conductivity				
Hardness				
Turbidity				
Osmotic Pressure				
Dissolved Oxygen				
Ammonia, N	<10			
Total Elements				
Aluminum	.3469			
Calcium	670.7			
Iron	.0994			
Magnesium	.7562			
Manganese				
Potassium	10.56			
Phosphorous				
Silicon	1.237			
Sodium	12.29			
Chromium				
Anions:				
Sulfate	385.8			
Chloride	34			
Nitrate, N see NO_3	<2.0			
Nitrite, N				
Bromide				
Fluoride				

Quality Control Calculations

Ion Sum	1114.55
Cation Sum	34.38
Anion Sum	9.00
Ion Balance	-103.20
% Ion Imbalance	58.52

Hg <1.0 (mg/mL)

These values have been reviewed and are approved for transmission.

CONSOLENERGY

Research and Development
www.consolenergy.com
4000 Brownsville Rd.
South Park, PA 15129

Sample Description.: **LIMESTONE SLURRY SOLIDS TEST 1**

Sample No.: LS 1
Date Received: 06/21/2005
Date Completed: 08/16/2005

Analytical No.: **20052617**
Project No.: 1621 -087 -000
Submitted By: JAW/SCT/JEL

Proximate (Dry)	Wt%
Ash	60.09
Volatile Matter	
Fixed Carbon	
BTU/lb	
MAF BTU/lb	

Ultimate (Dry)%	
Carbon	11.43
Hydrogen	
Nitrogen	
Chlorine	0.0065
Sulfur, Total	
Ash	60.09
Oxygen (DIFF)	

Major Ash Elem. (Dry)	
SiO2	2.44
Al2O3	0.35
TiO2	0.02
Fe2O3	0.21
CaO	51.29
MgO	0.41
Na2O	0.01
K2O	0.09
P2O5	0.02
SO3	3.31
Undetermined	41.85

Total Moisture

Sulfur Forms (Dry)
Pyritic Sulfur
Sulfate
Organic
Sulfur, Total

Ash Fusion Reducing Temp (F)
Initial
Softening
Hemispherical
Fluid

Ash Fusion Oxidizing
Initial
Softening
Hemispherical
Fluid

Misc.	
Analysis	Value
%solids, d	24.8
density, a	1.175

HGI/FSI
HGI
FSI

Trace Elements (ppm)	
Hg	0.031
F	

As Determined Moisture 0.24 %

These values have been reviewed and are approved for transmission.

CONSOLENERGY

Research and Development
www.consolenergy.com
4000 Brownsville Rd.
South Park, PA 15129

Sample Description.: LIMESTONE SLURRY SOLIDS TEST 2

Sample No.: LS 2
Date Received: 06/21/2005
Date Completed: 08/16/2005

Analytical No.: 20052618
Project No.: 1621 -087 -000
Submitted By: JAW/SCT/JEL

Proximate (Dry)	Wt%
Ash	60.92
Volatile Matter	
Fixed Carbon	
BTU/lb	
MAF BTU/lb	

Ultimate (Dry)%	
Carbon	11.18
Hydrogen	
Nitrogen	
Chlorine	0.0027
Sulfur, Total	
Ash	60.92
Oxygen (DIFF)	

Major Ash Elem. (Dry)	
SiO2	2.22
Al2O3	0.32
TiO2	0.01
Fe2O3	0.21
CaO	52.10
MgO	0.38
Na2O	0.01
K2O	0.08
P2O5	0.03
SO3	4.10
Undetermined	40.54

Total Moisture

Sulfur Forms (Dry)
Pyritic Sulfur
Sulfate
Organic
Sulfur, Total

Ash Fusion Reducing Temp (F)
Initial
Softening
Hemispherical
Fluid

Ash Fusion Oxidizing
Initial
Softening
Hemispherical
Fluid

Misc.	
Analysis	Value
%solids, d	25.6
density, a	1.180

HGI/FSI
HGI
FSI

Trace Elements (ppm)	
Hg	0.048
F	

As Determined Moisture 0.24 %

These values have been reviewed and are approved for transmission.

CONSOLENERGY

Research and Development
www.consolenergy.com
4000 Brownsville Rd.
South Park, PA 15129

Sample Description.: LIMESTONE SLURRY SOLIDS TEST 4
Sample No.: LS 4
Date Received: 06/21/2005
Date Completed: 08/16/2005

Analytical No.: 20052620
Project No.: 1621 -087 -000
Submitted By: JAW/SCT/JEL

Proximate (Dry)	Wt%
Ash	60.73
Volatile Matter	
Fixed Carbon	
BTU/lb	
MAF BTU/lb	

Ultimate (Dry)%	
Carbon	11.44
Hydrogen	
Nitrogen	
Chlorine	0.0052
Sulfur, Total	
Ash	60.73
Oxygen (DIFF)	

Major Ash Elem. (Dry)	
SiO2	2.36
Al2O3	0.33
TiO2	0.02
Fe2O3	0.21
CaO	52.02
MgO	0.37
Na2O	0.01
K2O	0.09
P2O5	0.01
SO3	3.63
Undetermined	40.95

Total Moisture

Sulfur Forms (Dry)
Pyritic Sulfur
Sulfate
Organic
Sulfur, Total

Ash Fusion Reducing Temp (F)
Initial
Softening
Hemispherical
Fluid

Ash Fusion Oxidizing
Initial
Softening
Hemispherical
Fluid

Misc.	
Analysis	Value
%solids, d	26.8
density, a	1.170

HGI/FSI
HGI
FSI

Trace Elements (ppm)	
Hg	0.035
F	

As Determined Moisture 0.34 %

These values have been reviewed and are approved for transmission

CONSOLENERGY

Research and Development
www.consolenergy.com
4000 Brownsville Rd.
South Park, PA 15129

Sample Description.: **LIMESTONE SLURRY SOLIDS TEST 5**

Sample No.: LS 5
Date Received: 06/21/2005
Date Completed: 08/16/2005

Analytical No.: **20052621**
Project No.: 1621 -087 -000
Submitted By: JAW/SCT/JEL

Proximate (Dry)	Wt%
Ash	60.20
Volatile Matter	
Fixed Carbon	
BTU/lb	
MAF BTU/lb	

Ultimate (Dry)%	
Carbon	11.45
Hydrogen	
Nitrogen	
Chlorine	0.0056
Sulfur, Total	
Ash	60.20
Oxygen (DIFF)	

Ash Fusion Reducing Temp (F)
Initial
Softening
Hemispherical
Fluid

Ash Fusion Oxidizing
Initial
Softening
Hemispherical
Fluid

Trace Elements (ppm)	
Hg	0.037
F	

Major Ash Elem. (Dry)	
SiO2	2.19
Al2O3	0.29
TiO2	0.01
Fe2O3	0.21
CaO	51.93
MgO	0.36
Na2O	0.02
K2O	0.08
P2O5	0.01
SO3	3.38
Undetermined	41.52

Misc.	
Analysis	Value
% solids, c	26.0
density, a	1.172

Total Moisture

Sulfur Forms (Dry)
Pyritic Sulfur
Sulfate
Organic
Sulfur, Total

HGI/FSI
HGI
FSI

As Determined Moisture 0.22 %

These values have been reviewed and are approved for transmission.

CONSOL ENERGY

Research and Development
www.consolenergy.com
4000 Brownsville Rd.
South Park, PA 15129

Sample Description.: LIMESTONE SLURRY SOLIDS TEST 6

Sample No.: LS 6
Date Received: 06/21/2005
Date Completed: 08/16/2005

Analytical No.: 20052622
Project No.: 1621 -087 -000
Submitted By: JAW/SCT/JEL

Proximate (Dry)	Wt%
Ash	60.20
Volatile Matter	
Fixed Carbon	
BTU/lb	
MAF BTU/lb	

Ultimate (Dry)%	
Carbon	11.42
Hydrogen	
Nitrogen	
Chlorine	0.0032
Sulfur, Total	
Ash	60.20
Oxygen (DIFF)	

Major Ash Elem. (Dry)	
SiO2	2.12
Al2O3	0.32
TiO2	0.01
Fe2O3	0.20
CaO	52.06
MgO	0.34
Na2O	
K2O	0.08
P2O5	
SO3	3.60
Undetermined	41.27

Total Moisture

Sulfur Forms (Dry)
Pyritic Sulfur
Sulfate
Organic
Sulfur, Total

Ash Fusion Reducing Temp (F)
Initial
Softening
Hemispherical,
Fluid

Ash Fusion Oxidizing
Initial
Softening
Hemispherical,
Fluid

Misc.	
Analysis	Value
%solids, d	25.1
density, a	1.195

HGI/FSI
HGI
FSI

Trace Elements (ppm)	
Hg	0.038
F	

As Determined Moisture 0.25 %

These values have been reviewed and are approved for transmission.

CONSOL ENERGY
Research and Development
www.consolenergy.com
4000 Brownsville Rd.
South Park, PA 15129

LIMESTONE SLURRY LIQUID TEST 1

Sample No.: LS LIQ 1
Date Received: 06/22/2005
Date Completed: 08/24/2005

Analytical No.: **20052639**
Project No.: 1621 -087 -000

Submitter: JAW/SCT/JEL

Water Result
(mg/L unless noted otherwise)

Parameter	Value	Value	Units	Avg Value
pH				
Acidity, $CaCO_3$				
Alkalinity, $CaCO_3$				
Hydroxide, $CaCO_3$				
Carbonate, $CaCO_3$				
Bicarbonate, $CaCO_3$				
Total Suspended Solids				
Total Dissolved Solids				
Specific Conductivity				
Hardness				
Turbidity				
Osmotic Pressure				
Dissolved Oxygen				
Ammonia, N	<10			
Total Elements				
Aluminum	<0.50			
Calcium	476.32			
Iron	1.47			
Magnesium	460.77			
Manganese	<0.50			
Potassium	10.70			
Phosphorous				
Silicon	12.27			
Sodium	339.32			
Chromium	<0.50			
Anions:				
Sulfate	2679.39			
Chloride	150			
Nitrate, N ~~N~~ NO_3	988			
Nitrite, N				
Bromide				
Fluoride				

Quality Control Calculations

Ion Sum	8493.82
Cation Sum	76.75
Anion Sum	130.62
Ion Balance	25.28
% Ion Imbalance	-25.98

Hg 2.8

These values have been reviewed and are approved for transmission.

CONSOL ENERGY
Research and Development
www.consolenergy.com
4000 Brownsville Rd.
South Park, PA 15129

LIMESTONE SLURRY LIQUID TEST 2

Sample No.: LS LIQ 2
Date Received: 06/22/2005
Date Completed: 08/24/2005

Analytical No.: **20052640**
Project No.: 1621 -087 -000

Submitter: JAW/SCT/JEL

Parameter	Water Result (mg/L unless noted otherwise) Value	Value	Units	Avg Value
pH				
Acidity, $CaCO_3$				
Alkalinity, $CaCO_3$				
Hydroxide, $CaCO_3$				
Carbonate, $CaCO_3$				
Bicarbonate, $CaCO_3$				
Total Suspended Solids				
Total Dissolved Solids				
Specific Conductivity				
Hardness				
Turbidity				
Osmotic Pressure				
Dissolved Oxygen				
Ammonia, N	<10			
Total Elements				
Aluminum	<0.50			
Calcium	1093.37			
Iron	<0.50			
Magnesium	474.07			
Manganese	<0.50			
Potassium	10.44			
Phosphorous				
Silicon	12.79			
Sodium	349.21			
Chromium	<0.50			
Anions:				
Sulfate	3888.98			
Chloride	120			
Nitrate, N see NO_3	775			
Nitrite, N				
Bromide				
Fluoride				

Quality Control Calculations

Ion Sum	9368.55
Cation Sum	109.00
Anion Sum	139.76
Ion Balance	13.53
% Ion Imbalance	-12.36

Hg 3.2

These values have been reviewed and are approved for transmission.

CONSOL ENERGY
Research and Development
www.consolenergy.com
4000 Brownsville Rd.
South Park, PA 15129

LIMESTONE SLURRY LIQUID TEST 3

Sample No.: LS LIQ 3
Date Received: 06/22/2005
Date Completed: 08/24/2005

Analytical No.: **20052641**
Project No.: 1621 -087 -000

Submitter: JAW/SCT/JEL

Parameter	Water Result (mg/L unless noted otherwise) Value	Value	Units	Avg Value
pH				
Acidity, $CaCO_3$				
Alkalinity, $CaCO_3$				
Hydroxide, $CaCO_3$				
Carbonate, $CaCO_3$				
Bicarbonate, $CaCO_3$				
Total Suspended Solids				
Total Dissolved Solids				
Specific Conductivity				
Hardness				
Turbidity				
Osmotic Pressure				
Dissolved Oxygen				
Ammonia, N	<10			
Total Elements				
Aluminum	<0.50			
Calcium	578.95			
Iron	<0.50			
Magnesium	466.33			
Manganese	<0.50			
Potassium	10.61			
Phosphorous				
Silicon	12.79			
Sodium	335.54			
Chromium	<0.50			
Anions:				
Sulfate	2840.31			
Chloride	350			
Nitrate, N NO_3	682			
Nitrite, N				
Bromide				
Fluoride				

Quality Control Calculations

Ion Sum	7602.32
Cation Sum	82.11
Anion Sum	117.76
Ion Balance	18.46
% Ion Imbalance	-17.84

Hg 3.1

These values have been reviewed and are approved for transmission.

CONSOL ENERGY
Research and Development
www.consolenergy.com
4000 Brownsville Rd.
South Park, PA 15129

LIMESTONE SLURRY LIQUID TEST 4

Sample No.: LS LIQ 4
Date Received: 06/22/2005
Date Completed: 08/24/2005

Analytical No.: **20052636**
Project No.: 1621 -087 -000

Submitter: JAW/SCT/JEL

Parameter	Water Result (mg/L unless noted otherwise) Value	Value	Units	Avg Value
pH				
Acidity, $CaCO_3$				
Alkalinity, $CaCO_3$				
Hydroxide, $CaCO_3$				
Carbonate, $CaCO_3$				
Bicarbonate, $CaCO_3$				
Total Suspended Solids				
Total Dissolved Solids				
Specific Conductivity				
Hardness				
Turbidity				
Osmotic Pressure				
Dissolved Oxygen				
Ammonia, N	<10			
Total Elements				
Aluminum	<0.50			
Calcium	315.88			
Iron	<0.50			
Magnesium	475.37			
Manganese	<0.50			
Potassium	14.33			
Phosphorous				
Silicon	12.71			
Sodium	378.39			
Chromium	<0.50			
Anions:				
Sulfate	2379.62			
Chloride	120			
Nitrate, N see NO_3	19			
Nitrite, N				
Bromide				
Fluoride				

Quality Control Calculations

Ion Sum	3767.74
Cation Sum	71.68
Anion Sum	54.32
Ion Balance	-18.31
% Ion Imbalance	13.78

Hg 33.6 (ng/mL)

These values have been reviewed and are approved for transmission.

CONSOL ENERGY
Research and Development
www.consolenergy.com
4000 Brownsville Rd.
South Park, PA 15129

LIMESTONE SLURRY LIQUID TEST 5

Sample No.: LS LIQ 5
Date Received: 06/22/2005
Date Completed: 08/24/2005

Analytical No.: **20052637**
Project No.: 1621 -087 -000

Submitter: JAW/SCT/JEL

Parameter	Water Result (mg/L unless noted otherwise) Value	Value	Units	Avg Value
pH				
Acidity, $CaCO_3$				
Alkalinity, $CaCO_3$				
Hydroxide, $CaCO_3$				
Carbonate, $CaCO_3$				
Bicarbonate, $CaCO_3$				
Total Suspended Solids				
Total Dissolved Solids				
Specific Conductivity				
Hardness				
Turbidity				
Osmotic Pressure				
Dissolved Oxygen				
Ammonia, N	<10			
Total Elements				
Aluminum	<0.50			
Calcium	1021.96			
Iron	<0.50			
Magnesium	555.96			
Manganese	<0.50			
Potassium	15.54			
Phosphorous				
Silicon	15.42			
Sodium	476.54			
Chromium	<0.50			
Anions:				
Sulfate	4299.60			
Chloride	500			
Nitrate, ~~N~~ NO_3 see	329			
Nitrite, N				
Bromide				
Fluoride				

Quality Control Calculations

Ion Sum	8326.74
Cation Sum	117.84
Anion Sum	127.18
Ion Balance	4.49
% Ion Imbalance	-3.81

Hg 13.3

These values have been reviewed and are approved for transmission.

CONSOL ENERGY

Research and Development
www.consolenergy.com
4000 Brownsville Rd.
South Park, PA 15129

LIMESTONE SLURRY LIQUID TEST 6

Sample No.: LS LIQ 6
Date Received: 06/22/2005
Date Completed: 08/24/2005

Analytical No.: **20052638**
Project No.: 1621 -087 -000

Submitter: JAW/SCT/JEL

Parameter	Water Result (mg/L unless noted otherwise) Value	Value	Units	Avg Value
pH				
Acidity, $CaCO_3$				
Alkalinity, $CaCO_3$				
Hydroxide, $CaCO_3$				
Carbonate, $CaCO_3$				
Bicarbonate, $CaCO_3$				
Total Suspended Solids				
Total Dissolved Solids				
Specific Conductivity				
Hardness				
Turbidity				
Osmotic Pressure				
Dissolved Oxygen				
Ammonia, N	<10			
Total Elements				
Aluminum	<0.50			
Calcium	609.68			
Iron	2.06			
Magnesium	532.68			
Manganese	<0.50			
Potassium	13.12			
Phosphorous				
Silicon	14.74			
Sodium	403.72			
Chromium	<0.50			
Anions:				
Sulfate	2980.28			
Chloride	470			
Nitrate, N see NO_3	1065			
Nitrite, N				
Bromide				
Fluoride				

Quality Control Calculations

Ion Sum	9728.43
Cation Sum	92.20
Anion Sum	151.41
Ion Balance	24.14
% Ion Imbalance	-24.31

Hg 10.6

These values have been reviewed and are approved for transmission.

CONSOLENERGY

Research and Development
www.consolenergy.com
4000 Brownsville Rd.
South Park, PA 15129

Sample Description.: **ESP HOPPER ASH HOPPER #1A**
Sample No.: ESP ASH-1-1A
Date Received: 06/21/2005
Date Completed: 07/28/2005

Analytical No.: **20052589**
Project No.: 1621 -087 -000
Submitted By: JAW/SCT/JEL

Proximate (Dry)	Wt%
Ash	
Volatile Matter	
Fixed Carbon	
BTU/lb	
MAF BTU/lb	

Ultimate (Dry)%	
Carbon	
Hydrogen	
Nitrogen	
Chlorine	
Sulfur, Total	
Ash	
Oxygen (DIFF)	

Ash Fusion Reducing Temp (F)	
Initial	
Softening	
Hemispherical	
Fluid	

Ash Fusion Oxidizing	
Initial	
Softening	
Hemispherical	
Fluid	

Trace Elements (ppm)	
Hg	
F	

Major Ash Elem. (AsDet)	
SiO2	44.55
Al2O3	20.45
TiO2	0.99
Fe2O3	22.78
CaO	2.84
MgO	0.87
Na2O	0.46
K2O	2.26
P2O5	<0.01
SO3	0.95
Undetermined	3.85

Total Moisture

Misc.	
Analysis	Value

Seive Analysis	
SIZE	WT %

Sulfur Forms (Dry)	
Pyritic Sulfur	
Sulfate	
Organic	
Sulfur, Total	

HGI/FSI	
HGI	
FSI	

As Determined Moisture 0 %

These values have been reviewed and are approved for transmission.

CONSOLENERGY

Research and Development
www.consolenergy.com
4000 Brownsville Rd.
South Park, PA 15129

Sample Description.: **ESP HOPPER ASH HOPPER #4A**
Sample No.: ESP ASH-1-4A
Date Received: 06/21/2005
Date Completed: 07/28/2005

Analytical No.: **20052590**
Project No.: 1621 -087 -000
Submitted By: JAW/SCT/JEL

Proximate (Dry)	Wt%
Ash	
Volatile Matter	
Fixed Carbon	
BTU/lb	
MAF BTU/lb	

Ultimate (Dry)%	
Carbon	
Hydrogen	
Nitrogen	
Chlorine	
Sulfur, Total	
Ash	
Oxygen (DIFF)	

Ash Fusion Reducing Temp (F)	
Initial	
Softening	
Hemispherical.	
Fluid	

Ash Fusion Oxidizing	
Initial	
Softening	
Hemispherical.	
Fluid	

Trace Elements (ppm)	
Hg	
F	

Major Ash Elem. (AsDet)	
SiO2	42.72
Al2O3	19.48
TiO2	0.95
Fe2O3	23.28
CaO	2.91
MgO	0.84
Na2O	0.42
K2O	2.12
P2O5	<0.01
SO3	0.96
Undetermined	6.32

Total Moisture

Misc.	
Analysis	Value

Seive Analysis	
SIZE	WT %

Sulfur Forms (Dry)	
Pyritic Sulfur	
Sulfate	
Organic	
Sulfur, Total	

HGI/FSI	
HGI	
FSI	

As Determined Moisture 0 %

These values have been reviewed and are approved for transmission.

CONSOLENERGY

Research and Development
www.consolenergy.com
4000 Brownsville Rd.
South Park, PA 15129

Sample Description.: **ESP HOPPER ASH HOPPER #8A**
Sample No.: ESP ASH-1-8A
Date Received: 06/21/2005
Date Completed: 07/28/2005

Analytical No.: **20052591**
Project No.: 1621 -087 -000
Submitted By: JAW/SCT/JEL

Proximate (Dry)	Wt%
Ash	
Volatile Matter	
Fixed Carbon	
BTU/lb	
MAF BTU/lb	

Ash Fusion Reducing Temp (F)	
Initial	
Softening	
Hemispherical.	
Fluid	

Trace Elements (ppm)	
Hg	
F	

Ultimate (Dry)%	
Carbon	
Hydrogen	
Nitrogen	
Chlorine	
Sulfur, Total	
Ash	
Oxygen (DIFF)	

Ash Fusion Oxidizing	
Initial	
Softening	
Hemispherical.	
Fluid	

Major Ash Elem. (AsDet)	
SiO2	41.34
Al2O3	18.84
TiO2	0.91
Fe2O3	24.06
CaO	3.31
MgO	0.81
Na2O	0.41
K2O	2.06
P2O5	<0.01
SO3	0.97
Undetermined	7.29

Total Moisture

Misc.	
Analysis	Value

Seive Analysis	
SIZE	WT %

Sulfur Forms (Dry)	
Pyritic Sulfur	
Sulfate	
Organic	
Sulfur, Total	

HGI/FSI	
HGI	
FSI	

As Determined Moisture 0 %

These values have been reviewed and are approved for transmission.

CONSOLENERGY

Research and Development
www.consolenergy.com
4000 Brownsville Rd.
South Park, PA 15129

Sample Description.: **ESP HOPPER ASH HOPPER #1B**
Sample No.: ESP ASH-1-1B
Date Received: 06/21/2005
Date Completed: 07/28/2005

Analytical No.: **20052592**
Project No.: 1621 -087 -000
Submitted By: JAW/SCT/JEL

Proximate (Dry)	Wt%
Ash	86.60
Volatile Matter	
Fixed Carbon	
BTU/lb	
MAF BTU/lb	

Ultimate (Dry)%	
Carbon	9.81
Hydrogen	
Nitrogen	
Chlorine	0.0011
Sulfur, Total	
Ash	86.60
Oxygen (DIFF)	

Ash Fusion Reducing Temp (F)
Initial
Softening
Hemispherical
Fluid

Ash Fusion Oxidizing
Initial
Softening
Hemispherical
Fluid

Trace Elements (ppm)	
Hg	0.193
F	

Major Ash Elem. (Dry)	
SiO2	40.55
Al2O3	19.78
TiO2	1.06
Fe2O3	21.00
CaO	2.50
MgO	0.93
Na2O	0.44
K2O	2.03
P2O5	0.25
SO3	2.49
Undetermined	8.97

Total Moisture

Misc.	
Analysis	Value

Seive Analysis	
SIZE	WT %

Sulfur Forms (Dry)
Pyritic Sulfur
Sulfate
Organic
Sulfur, Total

HGI/FSI
HGI
FSI

As Determined Moisture 0.62 %

These values have been reviewed and are approved for transmission.

CONSOLENERGY

Research and Development
www.consolenergy.com
4000 Brownsville Rd.
South Park, PA 15129

Sample Description.: **ESP HOPPER ASH HOPPER #4B**
Sample No.: ESP ASH-1-4B
Date Received: 06/21/2005
Date Completed: 07/28/2005

Analytical No.: **20052593**
Project No.: 1621 -087 -000
Submitted By: JAW/SCT/JEL

Proximate (Dry)	Wt%
Ash	92.81
Volatile Matter	
Fixed Carbon	
BTU/lb	
MAF BTU/lb	

Ultimate (Dry)%	
Carbon	5.85
Hydrogen	
Nitrogen	
Chlorine	0.0005
Sulfur, Total	
Ash	92.81
Oxygen (DIFF)	

Ash Fusion Reducing Temp (F)	
Initial	
Softening	
Hemispherical.	
Fluid	

Ash Fusion Oxidizing	
Initial	
Softening	
Hemispherical.	
Fluid	

Trace Elements (ppm)	
Hg	0.090
F	

Major Ash Elem. (Dry)	
SiO2	43.00
Al2O3	20.16
TIO2	1.04
Fe2O3	21.64
CaO	2.33
MgO	0.93
Na2O	0.41
K2O	2.05
P2O5	0.11
SO3	1.80
Undetermined	6.53

Total Moisture

Misc.	
Analysis	Value

Seive Analysis	
SIZE	WT %

Sulfur Forms (Dry)
Pyritic Sulfur
Sulfate
Organic
Sulfur, Total

HGI/FSI
HGI
FSI

As Determined Moisture 0.84 %

These values have been reviewed and are approved for transmission.

CONSOLENERGY

Research and Development
www.consolenergy.com
4000 Brownsville Rd.
South Park, PA 15129

Sample Description.: **ESP HOPPER ASH HOPPER #1A**
Sample No.: ESP ASH-2-1A
Date Received: 06/21/2005
Date Completed: 07/28/2005

Analytical No.: **20052594**
Project No.: 1621 -087 -000
Submitted By: JAW/SCT/JEL

Proximate (Dry)	Wt%
Ash	96.00
Volatile Matter	
Fixed Carbon	
BTU/lb	
MAF BTU/lb	

Ultimate (Dry)%	
Carbon	3.41
Hydrogen	
Nitrogen	
Chlorine	<.0005
Sulfur, Total	
Ash	96.00
Oxygen (DIFF)	

Ash Fusion Reducing Temp (F)
Initial
Softening
Hemispherical
Fluid

Ash Fusion Oxidizing
Initial
Softening
Hemispherical
Fluid

Trace Elements (ppm)	
Hg	0.088
F	

Major Ash Elem. (Dry)	
SiO2	44.95
Al2O3	19.84
TiO2	0.98
Fe2O3	24.47
CaO	2.93
MgO	0.92
Na2O	0.38
K2O	1.90
P2O5	0.06
SO3	1.02
Undetermined	2.55

Misc.	
Analysis	Value

Seive Analysis	
SIZE	WT %

Total Moisture

Sulfur Forms (Dry)
Pyritic Sulfur
Sulfate
Organic
Sulfur, Total

HGI/FSI
HGI
FSI

As Determined Moisture 0.21 %

These values have been reviewed and are approved for transmission.

CONSOLENERGY

Research and Development
www.consolenergy.com
4000 Brownsville Rd.
South Park, PA 15129

Sample Description.: **ESP HOPPER ASH HOPPER #4A**
Sample No.: ESP ASH-2-4A
Date Received: 06/21/2005
Date Completed: 07/28/2005

Analytical No.: **20052595**
Project No.: 1621 -087 -000
Submitted By: JAW/SCT/JEL

Proximate (Dry)	Wt%
Ash	95.00
Volatile Matter	
Fixed Carbon	
BTU/lb	
MAF BTU/lb	

Ultimate (Dry)%	
Carbon	4.88
Hydrogen	
Nitrogen	
Chlorine	<.0005
Sulfur, Total	
Ash	95.00
Oxygen (DIFF)	

Ash Fusion Reducing Temp (F)
Initial
Softening
Hemispherical.
Fluid

Ash Fusion Oxidizing
Initial
Softening
Hemispherical.
Fluid

Trace Elements (ppm)	
Hg	0.064
F	

Major Ash Elem. (Dry)	
SiO2	44.03
Al2O3	19.28
TiO2	0.98
Fe2O3	24.19
CaO	2.93
MgO	0.94
Na2O	0.38
K2O	1.88
P2O5	0.11
SO3	1.02
Undetermined	4.26

Total Moisture

Misc.	
Analysis	Value

Seive Analysis	
SIZE	WT %

Sulfur Forms (Dry)
Pyritic Sulfur
Sulfate
Organic
Sulfur, Total

HGI/FSI
HGI
FSI

As Determined Moisture 0.21 %

These values have been reviewed and are approved for transmission.

CONSOL ENERGY

Research and Development
www.consolenergy.com
4000 Brownsville Rd.
South Park, PA 15129

Sample Description.: **ESP HOPPER ASH HOPPER #8A**
Sample No.: ESP ASH-2-8A
Date Received: 06/21/2005
Date Completed: 07/28/2005

Analytical No.: **20052596**
Project No.: 1621 -087 -000
Submitted By: JAW/SCT/JEL

Proximate (Dry)	Wt%
Ash	94.83
Volatile Matter	
Fixed Carbon	
BTU/lb	
MAF BTU/lb	

Ultimate (Dry)%	
Carbon	5.19
Hydrogen	
Nitrogen	
Chlorine	<.0005
Sulfur, Total	
Ash	94.83
Oxygen (DIFF)	

Ash Fusion Reducing Temp (F)	
Initial	
Softening	
Hemispherical.	
Fluid	

Ash Fusion Oxidizing	
Initial	
Softening	
Hemispherical.	
Fluid	

Trace Elements (ppm)	
Hg	0.031
F	

Major Ash Elem. (Dry)	
SiO2	42.95
Al2O3	18.63
TiO2	0.91
Fe2O3	25.65
CaO	3.30
MgO	0.91
Na2O	0.37
K2O	1.80
P2O5	0.08
SO3	0.98
Undetermined	4.42

Misc.	
Analysis	Value

Seive Analysis	
SIZE	WT %

Total Moisture

Sulfur Forms (Dry)
Pyritic Sulfur
Sulfate
Organic
Sulfur, Total

HGI/FSI
HGI
FSI

As Determined Moisture 0.24 %

These values have been reviewed and are approved for transmission.

CONSOL ENERGY

Research and Development
www.consolenergy.com
4000 Brownsville Rd.
South Park, PA 15129

Sample Description.: **ESP HOPPER ASH HOPPER #1A**
Sample No.: ESP ASH-3-1A
Date Received: 06/21/2005
Date Completed: 07/28/2005

Analytical No.: **20052597**
Project No.: 1621 -087 -000
Submitted By: JAW/SCT/JEL

Proximate (Dry)	Wt%
Ash	96.51
Volatile Matter	
Fixed Carbon	
BTU/lb	
MAF BTU/lb	

Ultimate (Dry)%	
Carbon	3.44
Hydrogen	
Nitrogen	
Chlorine	<.0005
Sulfur, Total	
Ash	96.51
Oxygen (DIFF)	

Major Ash Elem. (Dry)	
SiO2	44.71
Al2O3	19.40
TiO2	0.98
Fe2O3	23.97
CaO	3.25
MgO	0.97
Na2O	0.40
K2O	1.92
P2O5	0.10
SO3	1.08
Undetermined	3.22

Total Moisture

Sulfur Forms (Dry)
Pyritic Sulfur
Sulfate
Organic
Sulfur, Total

Ash Fusion Reducing Temp (F)	
Initial	
Softening	
Hemispherical.	
Fluid	

Ash Fusion Oxidizing	
Initial	
Softening	
Hemispherical.	
Fluid	

Misc.	
Analysis	Value

HGI/FSI	
HGI	
FSI	

Trace Elements (ppm)	
Hg	0.087
F	

Seive Analysis	
SIZE	WT %

As Determined Moisture 0.2 %

These values have been reviewed and are approved for transmission.

CONSOL ENERGY

Research and Development
www.consolenergy.com
4000 Brownsville Rd.
South Park, PA 15129

Sample Description.: **ESP HOPPER ASH HOPPER #4A**
Sample No.: ESP ASH-3-4A
Date Received: 06/21/2005
Date Completed: 07/28/2005

Analytical No.: **20052598**
Project No.: 1621 -087 -000
Submitted By: JAW/SCT/JEL

Proximate (Dry)	Wt%
Ash	96.13
Volatile Matter	
Fixed Carbon	
BTU/lb	
MAF BTU/lb	

Ultimate (Dry)%	
Carbon	3.80
Hydrogen	
Nitrogen	
Chlorine	<.0005
Sulfur, Total	
Ash	96.13
Oxygen (DIFF)	

Major Ash Elem. (Dry)	
SiO2	43.58
Al2O3	18.62
TiO2	0.94
Fe2O3	24.45
CaO	3.33
MgO	0.97
Na2O	0.40
K2O	1.79
P2O5	0.09
SO3	1.06
Undetermined	4.77

Total Moisture

Sulfur Forms (Dry)
Pyritic Sulfur
Sulfate
Organic
Sulfur, Total

Ash Fusion Reducing Temp (F)
Initial
Softening
Hemispherical.
Fluid

Ash Fusion Oxidizing
Initial
Softening
Hemispherical.
Fluid

Misc.	
Analysis	Value

HGI/FSI
HGI
FSI

Trace Elements (ppm)	
Hg	0.039
F	

Seive Analysis	
SIZE	WT %

As Determined Moisture 0.23 %

These values have been reviewed and are approved for transmission.

CONSOL ENERGY

Research and Development
www.consolenergy.com
4000 Brownsville Rd.
South Park, PA 15129

Sample Description.: **ESP HOPPER ASH HOPPER #8A**
Sample No.: ESP ASH-3-8A
Date Received: 06/21/2005
Date Completed: 07/28/2005

Analytical No.: **20052599**
Project No.: 1621 -087 -000
Submitted By: JAW/SCT/JEL

Proximate (Dry)	Wt%
Ash	95.82
Volatile Matter	
Fixed Carbon	
BTU/lb	
MAF BTU/lb	

Ultimate (Dry)%	
Carbon	4.09
Hydrogen	
Nitrogen	
Chlorine	<.0005
Sulfur, Total	
Ash	95.82
Oxygen (DIFF)	

Ash Fusion Reducing Temp (F)	
Initial	
Softening	
Hemispherical.	
Fluid	

Ash Fusion Oxidizing	
Initial	
Softening	
Hemispherical.	
Fluid	

Trace Elements (ppm)	
Hg	0.024
F	

Major Ash Elem. (Dry)	
SiO2	43.99
Al2O3	20.70
TiO2	0.99
Fe2O3	25.27
CaO	3.23
MgO	0.89
Na2O	0.43
K2O	2.34
P2O5	0.12
SO3	0.95
Undetermined	1.09

Total Moisture

Misc.	
Analysis	Value

Seive Analysis	
SIZE	WT %

Sulfur Forms (Dry)
Pyritic Sulfur
Sulfate
Organic
Sulfur, Total

HGI/FSI
HGI
FSI

As Determined Moisture 0.34 %

These values have been reviewed and are approved for transmission.

CONSOLENERGY

Research and Development
www.consolenergy.com
4000 Brownsville Rd.
South Park, PA 15129

Sample Description.: **ESP HOPPER ASH HOPPER #1A**
Sample No.: ESP ASH-4-1A
Date Received: 06/21/2005
Date Completed: 07/28/2005

Analytical No.: **20052600**
Project No.: 1621 -087 -000
Submitted By: JAW/SCT/JEL

Proximate (Dry)	Wt%
Ash	96.40
Volatile Matter	
Fixed Carbon	
BTU/lb	
MAF BTU/lb	

Ultimate (Dry)%	
Carbon	3.44
Hydrogen	
Nitrogen	
Chlorine	<.0005
Sulfur, Total	
Ash	96.40
Oxygen (DIFF)	

Major Ash Elem. (Dry)	
SiO2	44.98
Al2O3	20.86
TiO2	1.01
Fe2O3	22.93
CaO	2.90
MgO	0.90
Na2O	0.44
K2O	2.28
P2O5	0.09
SO3	0.97
Undetermined	2.64

Total Moisture

Sulfur Forms (Dry)
Pyritic Sulfur
Sulfate
Organic
Sulfur, Total

Ash Fusion Reducing Temp (F)
Initial
Softening
Hemispherical.
Fluid

Ash Fusion Oxidizing
Initial
Softening
Hemispherical.
Fluid

Misc.	
Analysis	Value

HGI/FSI
HGI
FSI

Trace Elements (ppm)	
Hg	0.088
F	

Seive Analysis	
SIZE	WT %

As Determined Moisture 0.2 %

These values have been reviewed and are approved for transmission.

CONSOLENERGY

Research and Development
www.consolenergy.com
4000 Brownsville Rd.
South Park, PA 15129

Sample Description.: **ESP HOPPER ASH HOPPER #4A**
Sample No.: ESP ASH-4-4A
Date Received: 06/21/2005
Date Completed: 07/28/2005

Analytical No.: **20052601**
Project No.: 1621 -087 -000
Submitted By: JAW/SCT/JEL

Proximate (Dry)	Wt%
Ash	96.27
Volatile Matter	
Fixed Carbon	
BTU/lb	
MAF BTU/lb	

Ultimate (Dry)%	
Carbon	3.52
Hydrogen	
Nitrogen	
Chlorine	<.0005
Sulfur, Total	
Ash	96.27
Oxygen (DIFF)	

Ash Fusion Reducing Temp (F)	
Initial	
Softening	
Hemispherical.	
Fluid	

Ash Fusion Oxidizing	
Initial	
Softening	
Hemispherical.	
Fluid	

Trace Elements (ppm)	
Hg	0.035
F	

Major Ash Elem. (Dry)	
SiO2	45.02
Al2O3	20.45
TiO2	1.00
Fe2O3	23.25
CaO	3.05
MgO	0.92
Na2O	0.44
K2O	2.27
P2O5	0.08
SO3	0.96
Undetermined	2.56

Total Moisture

Misc.	
Analysis	Value

Seive Analysis	
SIZE	WT %

Sulfur Forms (Dry)
Pyritic Sulfur
Sulfate
Organic
Sulfur, Total

HGI/FSI
HGI
FSI

As Determined Moisture 0.18 %

These values have been reviewed and are approved for transmission.

CONSOLENERGY

Research and Development
www.consolenergy.com
4000 Brownsville Rd.
South Park, PA 15129

Sample Description.: **ESP HOPPER ASH HOPPER #8A**

Sample No.: ESP ASH-4-8A
Date Received: 06/21/2005
Date Completed: 07/28/2005

Analytical No.: **20052602**
Project No.: 1621 -087 -000
Submitted By: JAW/SCT/JEL

Proximate (Dry)	Wt%
Ash	95.95
Volatile Matter	
Fixed Carbon	
BTU/lb	
MAF BTU/lb	

Ash Fusion Reducing Temp (F)	
Initial	
Softening	
Hemispherical.	
Fluid	

Trace Elements (ppm)	
Hg	0.015
F	

Ultimate (Dry)%	
Carbon	3.70
Hydrogen	
Nitrogen	
Chlorine	<.0005
Sulfur, Total	
Ash	95.95
Oxygen (DIFF)	

Ash Fusion Oxidizing	
Initial	
Softening	
Hemispherical.	
Fluid	

Major Ash Elem. (Dry)	
SiO2	44.81
Al2O3	20.42
TiO2	0.99
Fe2O3	23.98
CaO	3.19
MgO	0.90
Na2O	0.44
K2O	2.33
P2O5	0.09
SO3	0.87
Undetermined	1.98

Misc.	
Analysis	Value

Seive Analysis	
SIZE	WT %

Total Moisture

Sulfur Forms (Dry)
Pyritic Sulfur
Sulfate
Organic
Sulfur, Total

HGI/FSI
HGI
FSI

As Determined Moisture 0.16 %

These values have been reviewed and are approved for transmission.

CONSOL ENERGY

Research and Development
www.consolenergy.com
4000 Brownsville Rd.
South Park, PA 15129

Sample Description.: **ESP HOPPER ASH HOPPER #2B**
Sample No.: ESP ASH-4-2B
Date Received: 06/21/2005
Date Completed: 07/28/2005

Analytical No.: **20052603**
Project No.: 1621 -087 -000
Submitted By: JAW/SCT/JEL

Proximate (Dry)	Wt%
Ash	90.82
Volatile Matter	
Fixed Carbon	
BTU/lb	
MAF BTU/lb	

Ultimate (Dry)%	
Carbon	6.65
Hydrogen	
Nitrogen	
Chlorine	0.0009
Sulfur, Total	
Ash	90.82
Oxygen (DIFF)	

Ash Fusion Reducing Temp (F)	
Initial	
Softening	
Hemispherical.	
Fluid	

Ash Fusion Oxidizing	
Initial	
Softening	
Hemispherical.	
Fluid	

Trace Elements (ppm)	
Hg	0.110
F	

Major Ash Elem. (Dry)	
SiO2	41.34
Al2O3	20.66
TiO2	1.13
Fe2O3	21.14
CaO	2.69
MgO	0.96
Na2O	0.48
K2O	2.39
P2O5	0.29
SO3	2.98
Undetermined	5.94

Total Moisture

Misc.	
Analysis	Value

Seive Analysis	
SIZE	WT %

Sulfur Forms (Dry)
Pyritic Sulfur
Sulfate
Organic
Sulfur, Total

HGI/FSI
HGI
FSI

As Determined Moisture 0.42 %

These values have been reviewed and are approved for transmission.

CONSOLENERGY

Research and Development
www.consolenergy.com
4000 Brownsville Rd.
South Park, PA 15129

Sample Description.: **ESP HOPPER ASH HOPPER #1A**
Sample No.: ESP ASH-5-1A
Date Received: 06/21/2005
Date Completed: 07/28/2005

Analytical No.: **20052604**
Project No.: 1621 -087 -000
Submitted By: JAW/SCT/JEL

Proximate (Dry)	Wt%
Ash	97.08
Volatile Matter	
Fixed Carbon	
BTU/lb	
MAF BTU/lb	

Ash Fusion Reducing Temp (F)	
Initial	
Softening	
Hemispherical.	
Fluid	

Trace Elements (ppm)	
Hg	0.063
F	

Ultimate (Dry)%	
Carbon	2.93
Hydrogen	
Nitrogen	
Chlorine	0.0007
Sulfur, Total	
Ash	97.08
Oxygen (DIFF)	

Ash Fusion Oxidizing	
Initial	
Softening	
Hemispherical.	
Fluid	

Major Ash Elem. (Dry)	
SiO2	46.00
Al2O3	20.08
TiO2	1.01
Fe2O3	23.73
CaO	3.33
MgO	0.93
Na2O	0.47
K2O	2.32
P2O5	0.09
SO3	1.02
Undetermined	1.02

Misc.	
Analysis	Value

Seive Analysis	
SIZE	WT %

Total Moisture

Sulfur Forms (Dry)
Pyritic Sulfur
Sulfate
Organic
Sulfur, Total

HGI/FSI
HGI
FSI

As Determined Moisture 0.17 %

These values have been reviewed and are approved for transmission.

CONSOLENERGY

Research and Development
www.consolenergy.com
4000 Brownsville Rd.
South Park, PA 15129

Sample Description.: **ESP HOPPER ASH HOPPER #4A**
Sample No.: ESP ASH-5-4A
Date Received: 06/21/2005
Date Completed: 07/28/2005

Analytical No.: **20052605**
Project No.: 1621 -087 -000
Submitted By: JAW/SCT/JEL

Proximate (Dry)	Wt%
Ash	94.22
Volatile Matter	
Fixed Carbon	
BTU/lb	
MAF BTU/lb	

Ultimate (Dry)%	
Carbon	5.38
Hydrogen	
Nitrogen	
Chlorine	0.0005
Sulfur, Total	
Ash	94.22
Oxygen (DIFF)	

Major Ash Elem. (Dry)	
SiO2	44.56
Al2O3	19.55
TiO2	0.98
Fe2O3	23.27
CaO	3.58
MgO	0.91
Na2O	0.44
K2O	2.18
P2O5	0.10
SO3	1.12
Undetermined	3.31

Total Moisture

Sulfur Forms (Dry)
Pyritic Sulfur
Sulfate
Organic
Sulfur, Total

Ash Fusion Reducing Temp (F)
Initial
Softening
Hemispherical.
Fluid

Ash Fusion Oxidizing
Initial
Softening
Hemispherical.
Fluid

Misc.
Analysis Value

HGI/FSI
HGI
FSI

Trace Elements (ppm)	
Hg	0.088
F	

Seive Analysis	
SIZE	WT %

As Determined Moisture 0.26 %

These values have been reviewed and are approved for transmission.

CONSOLENERGY

Research and Development
www.consolenergy.com
4000 Brownsville Rd.
South Park, PA 15129

Sample Description.: LIMESTONE SLURRY SOLIDS TEST 3
Sample No.: LS 3
Date Received: 06/21/2005
Date Completed: 08/16/2005

Analytical No.: 20052619
Project No.: 1621 -087 -000
Submitted By: JAW/SCT/JEL

Proximate (Dry)	Wt%
Ash	60.43
Volatile Matter	
Fixed Carbon	
BTU/lb	
MAF BTU/lb	

Ultimate (Dry)%	
Carbon	11.22
Hydrogen	
Nitrogen	
Chlorine	0.0034
Sulfur, Total	
Ash	60.43
Oxygen (DIFF)	

Major Ash Elem. (Dry)	
SiO2	2.41
Al2O3	0.32
TiO2	0.01
Fe2O3	0.22
CaO	51.53
MgO	0.37
Na2O	
K2O	0.09
P2O5	0.01
SO3	3.81
Undetermined	41.23

Total Moisture

Sulfur Forms (Dry)
Pyritic Sulfur
Sulfate
Organic
Sulfur, Total

Ash Fusion Reducing Temp (F)	
Initial	
Softening	
Hemispherical	
Fluid	

Ash Fusion Oxidizing	
Initial	
Softening	
Hemispherical	
Fluid	

Misc.	
Analysis	Value
%solids, d	25.6
density, a	1.172

HGI/FSI
HGI
FSI

Trace Elements (ppm)	
Hg	0.038
F	

As Determined Moisture 0.24 %

These values have been reviewed and are approved for transmission.

CONSOLENERGY

Research and Development
www.consolenergy.com
4000 Brownsville Rd.
South Park, PA 15129

Sample Description.: **ESP HOPPER ASH HOPPER #8A**
Sample No.: ESP ASH-5-8A
Date Received: 06/21/2005
Date Completed: 07/28/2005

Analytical No.: **20052606**
Project No.: 1621 -087 -000
Submitted By: JAW/SCT/JEL

Proximate (Dry)	Wt%
Ash	93.42
Volatile Matter	
Fixed Carbon	
BTU/lb	
MAF BTU/lb	

Ultimate (Dry)%	
Carbon	6.70
Hydrogen	
Nitrogen	
Chlorine	0.0007
Sulfur, Total	
Ash	93.42
Oxygen (DIFF)	

Ash Fusion Reducing Temp (F)
Initial
Softening
Hemispherical.
Fluid

Ash Fusion Oxidizing
Initial
Softening
Hemispherical.
Fluid

Trace Elements (ppm)	
Hg	0.066
F	

Major Ash Elem. (Dry)	
SiO2	43.30
Al2O3	18.78
TiO2	0.92
Fe2O3	24.19
CaO	3.96
MgO	0.88
Na2O	0.40
K2O	2.02
P2O5	0.07
SO3	1.11
Undetermined	4.37

Total Moisture

Misc.
Analysis Value

Seive Analysis	
SIZE	WT %

Sulfur Forms (Dry)
Pyritic Sulfur
Sulfate
Organic
Sulfur, Total

HGI/FSI
HGI
FSI

As Determined Moisture 0.21 %

These values have been reviewed and are approved for transmission.

CONSOL ENERGY

Research and Development
www.consolenergy.com
4000 Brownsville Rd.
South Park, PA 15129

Sample Description.: **ESP HOPPER ASH HOPPER #1B**
Sample No.: ESP ASH-5-1B
Date Received: 06/21/2005
Date Completed: 07/20/2005

Analytical No.: **20052607**
Project No.: 1621 -087 -000
Submitted By: JAW/SCT/JEL

Proximate (Dry)	Wt%
Ash	92.40
Volatile Matter	
Fixed Carbon	
BTU/lb	
MAF BTU/lb	

Ash Fusion Reducing Temp (F)	
Initial	
Softening	
Hemispherical.	
Fluid	

Trace Elements (ppm)	
Hg	0.083
F	

Ultimate (Dry)%	
Carbon	5.28
Hydrogen	
Nitrogen	
Chlorine	<.0005
Sulfur, Total	
Ash	92.40
Oxygen (DIFF)	

Ash Fusion Oxidizing	
Initial	
Softening	
Hemispherical.	
Fluid	

Major Ash Elem. (Dry)	
SiO2	40.77
Al2O3	20.16
TiO2	1.12
Fe2O3	20.88
CaO	2.75
MgO	1.00
Na2O	0.48
K2O	2.17
P2O5	0.27
SO3	2.89
Undetermined	7.51

Misc.	
Analysis	Value

Seive Analysis	
SIZE	WT %

Total Moisture

Sulfur Forms (Dry)
Pyritic Sulfur
Sulfate
Organic
Sulfur, Total

HGI/FSI
HGI
FSI

As Determined Moisture 0.29 %

These values have been reviewed and are approved for transmission.

CONSOLENERGY

Research and Development
www.consolenergy.com
4000 Brownsville Rd.
South Park, PA 15129

Sample Description.: **ESP HOPPER ASH HOPPER #4B**
Sample No.: ESP ASH-5-4B
Date Received: 06/21/2005
Date Completed: 07/20/2005

Analytical No.: **20052608**
Project No.: 1621 -087 -000
Submitted By: JAW/SCT/JEL

Proximate (Dry)	Wt%
Ash	93.48
Volatile Matter	
Fixed Carbon	
BTU/lb	
MAF BTU/lb	

Ultimate (Dry)%	
Carbon	4.56
Hydrogen	
Nitrogen	
Chlorine	<.0005
Sulfur, Total	
Ash	93.48
Oxygen (DIFF)	

Ash Fusion Reducing Temp (F)
Initial
Softening
Hemispherical.
Fluid

Ash Fusion Oxidizing
Initial
Softening
Hemispherical.
Fluid

Trace Elements (ppm)	
Hg	0.114
F	

Major Ash Elem. (Dry)	
SiO2	43.06
Al2O3	19.62
TiO2	1.06
Fe2O3	21.15
CaO	2.98
MgO	1.00
Na2O	0.48
K2O	2.16
P2O5	0.20
SO3	2.31
Undetermined	5.98

Total Moisture

Misc.	
Analysis	Value

Seive Analysis	
SIZE	WT %

Sulfur Forms (Dry)
Pyritic Sulfur
Sulfate
Organic
Sulfur, Total

HGI/FSI
HGI
FSI

As Determined Moisture 0.43 %

These values have been reviewed and are approved for transmission.

CONSOLENERGY

Research and Development
www.consolenergy.com
4000 Brownsville Rd.
South Park, PA 15129

Sample Description.: **ESP HOPPER ASH HOPPER #8B**
Sample No.: ESP ASH-5-8B
Date Received: 06/21/2005
Date Completed: 07/20/2005

Analytical No.: **20052609**
Project No.: 1621 -087 -000
Submitted By: JAW/SCT/JEL

Proximate (Dry)	Wt%
Ash	88.98
Volatile Matter	
Fixed Carbon	
BTU/lb	
MAF BTU/lb	

Ultimate (Dry)%	
Carbon	10.00
Hydrogen	
Nitrogen	
Chlorine	0.0038
Sulfur, Total	
Ash	88.98
Oxygen (DIFF)	

Ash Fusion Reducing Temp (F)	
Initial	
Softening	
Hemispherical.	
Fluid	

Ash Fusion Oxidizing	
Initial	
Softening	
Hemispherical.	
Fluid	

Trace Elements (ppm)	
Hg	0.084
F	

Major Ash Elem. (Dry)	
SiO2	40.67
Al2O3	19.47
TiO2	0.98
Fe2O3	21.67
CaO	2.99
MgO	0.87
Na2O	0.47
K2O	2.31
P2O5	0.12
SO3	1.79
Undetermined	8.66

Total Moisture

Misc.	
Analysis	Value

Seive Analysis	
SIZE	WT %

Sulfur Forms (Dry)
Pyritic Sulfur
Sulfate
Organic
Sulfur, Total

HGI/FSI
HGI
FSI

As Determined Moisture 0.46 %

These values have been reviewed and are approved for transmission.

CONSOLENERGY

Research and Development
www.consolenergy.com
4000 Brownsville Rd.
South Park, PA 15129

Sample Description.: **ESP HOPPER ASH HOPPER #1A**

Sample No.: ESP ASH-6-1A
Date Received: 06/21/2005
Date Completed: 07/20/2005

Analytical No.: **20052610**
Project No.: 1621 -087 -000
Submitted By: JAW/SCT/JEL

Proximate (Dry)	Wt%
Ash	96.60
Volatile Matter	
Fixed Carbon	
BTU/lb	
MAF BTU/lb	

Ultimate (Dry)%	
Carbon	3.14
Hydrogen	
Nitrogen	
Chlorine	<.0005
Sulfur, Total	
Ash	96.60
Oxygen (DIFF)	

Ash Fusion Reducing Temp (F)
Initial
Softening
Hemispherical.
Fluid

Ash Fusion Oxidizing
Initial
Softening
Hemispherical.
Fluid

Trace Elements (ppm)	
Hg	0.072
F	

Major Ash Elem. (Dry)	
SiO2	45.63
Al2O3	20.71
TiO2	1.00
Fe2O3	22.53
CaO	3.28
MgO	0.89
Na2O	0.47
K2O	2.46
P2O5	0.07
SO3	0.98
Undetermined	1.98

Total Moisture

Misc.	
Analysis	Value

Seive Analysis	
SIZE	WT %

Sulfur Forms (Dry)
Pyritic Sulfur
Sulfate
Organic
Sulfur, Total

HGI/FSI
HGI
FSI

As Determined Moisture 0.21 %

These values have been reviewed and are approved for transmission.

CONSOLENERGY

Research and Development
www.consolenergy.com
4000 Brownsville Rd.
South Park, PA 15129

Sample Description.: **ESP HOPPER ASH HOPPER #4A**
Sample No.: ESP ASH-6-4A
Date Received: 06/21/2005
Date Completed: 07/20/2005

Analytical No.: **20052611**
Project No.: 1621 -087 -000
Submitted By: JAW/SCT/JEL

Proximate (Dry)	Wt%
Ash	94.75
Volatile Matter	
Fixed Carbon	
BTU/lb	
MAF BTU/lb	

Ash Fusion Reducing Temp (F)	
Initial	
Softening	
Hemispherical	
Fluid	

Trace Elements (ppm)	
Hg	0.090
F	

Ultimate (Dry)%	
Carbon	4.84
Hydrogen	
Nitrogen	
Chlorine	<.0005
Sulfur, Total	
Ash	94.75
Oxygen (DIFF)	

Ash Fusion Oxidizing	
Initial	
Softening	
Hemispherical	
Fluid	

Major Ash Elem. (Dry)	
SiO2	43.90
Al2O3	20.11
TiO2	0.97
Fe2O3	22.92
CaO	3.78
MgO	0.88
Na2O	0.46
K2O	2.36
P2O5	0.06
SO3	1.03
Undetermined	3.53

Misc.
Analysis Value

Seive Analysis	
SIZE	WT %

Total Moisture

Sulfur Forms (Dry)
Pyritic Sulfur
Sulfate
Organic
Sulfur, Total

HGI/FSI
HGI
FSI

As Determined Moisture 0.19 %

These values have been reviewed and are approved for transmission.

CONSOLENERGY

Research and Development
www.consolenergy.com
4000 Brownsville Rd.
South Park, PA 15129

Sample Description.: **ESP HOPPER ASH HOPPER #8A**
Sample No.: ESP ASH-6-8A
Date Received: 06/21/2005
Date Completed: 07/20/2005

Analytical No.: **20052612**
Project No.: 1621 -087 -000
Submitted By: JAW/SCT/JEL

Proximate (Dry)	Wt%
Ash	94.14
Volatile Matter	
Fixed Carbon	
BTU/lb	
MAF BTU/lb	

Ash Fusion Reducing Temp (F)	
Initial	
Softening	
Hemispherical.	
Fluid	

Trace Elements (ppm)	
Hg	0.063
F	

Ultimate (Dry)%	
Carbon	5.71
Hydrogen	
Nitrogen	
Chlorine	<.0005
Sulfur, Total	
Ash	94.14
Oxygen (DIFF)	

Ash Fusion Oxidizing	
Initial	
Softening	
Hemispherical.	
Fluid	

Major Ash Elem. (Dry)	
SIO2	42.69
Al2O3	19.55
TiO2	0.92
Fe2O3	23.98
CaO	3.86
MgO	0.83
Na2O	0.44
K2O	2.29
P2O5	0.05
SO3	1.04
Undetermined	4.35

Misc.	
Analysis	Value

Seive Analysis	
SIZE	WT %

Total Moisture

Sulfur Forms (Dry)
Pyritic Sulfur
Sulfate
Organic
Sulfur, Total

HGI/FSI	
HGI	
FSI	

As Determined Moisture 0.17 %

These values have been reviewed and are approved for transmission.

CONSOLENERGY

Research and Development
www.consolenergy.com
4000 Brownsville Rd.
South Park, PA 15129

Sample Description.: **ESP HOPPER ASH HOPPER #1B**
Sample No.: ESP ASH-6-1B
Date Received: 06/21/2005
Date Completed: 07/20/2005

Analytical No.: **20052613**
Project No.: 1621 -087 -000
Submitted By: JAW/SCT/JEL

Proximate (Dry)	Wt%
Ash	92.95
Volatile Matter	
Fixed Carbon	
BTU/lb	
MAF BTU/lb	

Ultimate (Dry)%	
Carbon	4.30
Hydrogen	
Nitrogen	
Chlorine	<.0005
Sulfur, Total	
Ash	92.95
Oxygen (DIFF)	

Major Ash Elem. (Dry)	
SiO2	41.71
Al2O3	22.29
TiO2	1.19
Fe2O3	19.97
CaO	2.65
MgO	0.99
Na2O	0.55
K2O	2.66
P2O5	0.28
SO3	3.07
Undetermined	4.64

Total Moisture

Sulfur Forms (Dry)
Pyritic Sulfur
Sulfate
Organic
Sulfur, Total

Ash Fusion Reducing Temp (F)
Initial
Softening
Hemispherical.
Fluid

Ash Fusion Oxidizing
Initial
Softening
Hemispherical.
Fluid

Misc.
Analysis Value

HGI/FSI
HGI
FSI

Trace Elements (ppm)
Hg 0.914
F

Seive Analysis	
SIZE	WT %

As Determined Moisture 0.43 %

These values have been reviewed and are approved for transmission.

CONSOLENERGY

Research and Development
www.consolenergy.com
4000 Brownsville Rd.
South Park, PA 15129

Sample Description.: **ESP HOPPER ASH HOPPER #8B**
Sample No.: ESP ASH-6-8B
Date Received: 06/21/2005
Date Completed: 07/20/2005

Analytical No.: **20052614**
Project No.: 1621 -087 -000
Submitted By: JAW/SCT/JEL

Proximate (Dry)	Wt%
Ash	90.60
Volatile Matter	
Fixed Carbon	
BTU/lb	
MAF BTU/lb	

Ultimate (Dry)%	
Carbon	7.86
Hydrogen	
Nitrogen	
Chlorine	<.0005
Sulfur, Total	
Ash	90.60
Oxygen (DIFF)	

Ash Fusion Reducing Temp (F)
Initial
Softening
Hemispherical.
Fluid

Ash Fusion Oxidizing
Initial
Softening
Hemispherical.
Fluid

Trace Elements (ppm)	
Hg	0.064
F	

Major Ash Elem. (Dry)	
SiO2	41.12
Al2O3	20.45
TiO2	1.04
Fe2O3	21.85
CaO	2.76
MgO	0.87
Na2O	0.47
K2O	2.41
P2O5	0.12
SO3	1.89
Undetermined	7.02

Total Moisture

Misc.	
Analysis	Value

Seive Analysis	
SIZE	WT %

Sulfur Forms (Dry)
Pyritic Sulfur
Sulfate
Organic
Sulfur, Total

HGI/FSI
HGI
FSI

As Determined Moisture 0.3 %

These values have been reviewed and are approved for transmission.

CONSOL ENERGY

Research and Development
www.consolenergy.com
4000 Brownsville Rd.
South Park, PA 15129

Sample Description.: **ESP HOPPER ASH HOPPER #6C**
Sample No.: ESP ASH-6-6C
Date Received: 06/21/2005
Date Completed: 07/20/2005

Analytical No.: **20052615**
Project No.: 1621 -087 -000
Submitted By: JAW/SCT/JEL

Proximate (Dry)	Wt%
Ash	89.91
Volatile Matter	
Fixed Carbon	
BTU/lb	
MAF BTU/lb	

Ultimate (Dry)%	
Carbon	6.65
Hydrogen	
Nitrogen	
Chlorine	0.0010
Sulfur, Total	
Ash	89.91
Oxygen (DIFF)	

Ash Fusion Reducing Temp (F)
Initial
Softening
Hemispherical.
Fluid

Ash Fusion Oxidizing
Initial
Softening
Hemispherical.
Fluid

Trace Elements (ppm)	
Hg	0.061
F	

Major Ash Elem. (Dry)	
SiO2	40.75
Al2O3	19.78
TiO2	1.05
Fe2O3	20.77
CaO	2.35
MgO	0.84
Na2O	0.46
K2O	2.33
P2O5	0.14
SO3	3.46
Undetermined	8.07

Total Moisture

Misc.	
Analysis	Value

Seive Analysis	
SIZE	WT %

Sulfur Forms (Dry)
Pyritic Sulfur
Sulfate
Organic
Sulfur, Total

HGI/FSI
HGI
FSI

As Determined Moisture 0.69 %

These values have been reviewed and are approved for transmission.

CONSOLENERGY

Research and Development
www.consolenergy.com
4000 Brownsville Rd.
South Park, PA 15129

Sample Description.: **ESP HOPPER ASH HOPPER #8C**
Sample No.: ESP ASH-6-8C
Date Received: 06/21/2005
Date Completed: 07/20/2005

Analytical No.: **20052616**
Project No.: 1621 -087 -000
Submitted By: JAW/SCT/JEL

Proximate (Dry)	Wt%
Ash	92.08
Volatile Matter	
Fixed Carbon	
BTU/lb	
MAF BTU/lb	

Ultimate (Dry)%	
Carbon	4.48
Hydrogen	
Nitrogen	
Chlorine	0.0008
Sulfur, Total	
Ash	92.08
Oxygen (DIFF)	

Major Ash Elem. (Dry)	
SiO2	41.60
Al2O3	21.32
TiO2	1.16
Fe2O3	19.74
CaO	2.83
MgO	0.95
Na2O	0.54
K2O	2.56
P2O5	0.26
SO3	4.57
Undetermined	4.47

Total Moisture

Sulfur Forms (Dry)
Pyritic Sulfur
Sulfate
Organic
Sulfur, Total

Ash Fusion Reducing Temp (F)
Initial
Softening
Hemispherical
Fluid

Ash Fusion Oxidizing
Initial
Softening
Hemispherical
Fluid

Misc.	
Analysis	Value

HGI/FSI
HGI
FSI

Trace Elements (ppm)	
Hg	0.025
F	

Seive Analysis	
SIZE	WT %

As Determined Moisture 0.28 %

These values have been reviewed and are approved for transmission.

CONSOLENERGY

Research and Development
www.consolenergy.com
4000 Brownsville Rd.
South Park, PA 15129

Sample Description.: FGD SLURRY SOLIDS TEST 1
Sample No.: FGD SOLIDS 1
Date Received: 06/21/2005
Date Completed: 08/16/2005

Analytical No.: 20052623
Project No.: 1621 -087 -000
Submitted By: JAW/SCT/JEL

Proximate (Dry)	Wt%
Ash	97.02
Volatile Matter	
Fixed Carbon	
BTU/lb	
MAF BTU/lb	

Ultimate (Dry)%	
Carbon	0.42
Hydrogen	
Nitrogen	
Chlorine	0.0267
Sulfur, Total	
Ash	97.02
Oxygen (DIFF)	

Major Ash Elem. (Dry)	
SiO2	1.49
Al2O3	0.30
TiO2	0.01
Fe2O3	0.20
CaO	41.45
MgO	0.15
Na2O	0.08
K2O	0.08
P2O5	
SO3	53.09
Undetermined	3.15

Total Moisture

Sulfur Forms (Dry)
Pyritic Sulfur
Sulfate
Organic
Sulfur, Total

Ash Fusion Reducing Temp (F)
Initial
Softening
Hemispherical
Fluid

Ash Fusion Oxidizing
Initial
Softening
Hemispherical
Fluid

Misc.	
Analysis	Value
%solids, a	30.42
%moistur	49.2
density, a	1.090

HGI/FSI
HGI
FSI

Trace Elements (ppm)	
Hg	0.554
F	

As Determined Moisture 1.33 %

These values have been reviewed and are approved for transmission.

CONSOL ENERGY

Research and Development
www.consolenergy.com
4000 Brownsville Rd.
South Park, PA 15129

Sample Description.: FGD SLURRY SOLIDS TEST 2
Sample No.: FGD SOLIDS 2
Date Received: 06/21/2005
Date Completed: 08/16/2005

Analytical No.: 20052624
Project No.: 1621 -087 -000
Submitted By: JAW/SCT/JEL

Proximate (Dry)	Wt%
Ash	97.89
Volatile Matter	
Fixed Carbon	
BTU/lb	
MAF BTU/lb	

Ultimate (Dry)%	
Carbon	0.42
Hydrogen	
Nitrogen	
Chlorine	0.0193
Sulfur, Total	
Ash	97.89
Oxygen (DIFF)	

Major Ash Elem. (Dry)	
SIO2	1.49
Al2O3	0.28
TiO2	0.01
Fe2O3	0.19
CaO	41.42
MgO	0.16
Na2O	0.09
K2O	0.06
P2O5	
SO3	53.44
Undetermined	2.86

Total Moisture

Sulfur Forms (Dry)
Pyritic Sulfur
Sulfate
Organic
Sulfur, Total

Ash Fusion Reducing Temp (F)
Initial
Softening
Hemispherical
Fluid

Ash Fusion Oxidizing
Initial
Softening
Hemispherical
Fluid

Misc.	
Analysis	Value
%solids, a	25.2
%moistur	44.8
density, a	1.092

Trace Elements (ppm)	
Hg	0.509
F	

HGI/FSI
HGI
FSI

As Determined Moisture 0.96 %

These values have been reviewed and are approved for transmission.

CONSOL ENERGY

Research and Development
www.consolenergy.com
4000 Brownsville Rd.
South Park, PA 15129

Sample Description.: **FGD SLURRY SOLIDS TEST 3**
Sample No.: FGD SOLIDS 3
Date Received: 06/21/2005
Date Completed: 08/16/2005

Analytical No.: **20052625**
Project No.: 1621 -087 -000
Submitted By: JAW/SCT/JEL

Proximate (Dry)	Wt%
Ash	97.52
Volatile Matter	
Fixed Carbon	
BTU/lb	
MAF BTU/lb	

Ultimate (Dry)%	
Carbon	0.52
Hydrogen	
Nitrogen	
Chlorine	0.0283
Sulfur, Total	
Ash	97.52
Oxygen (DIFF)	

Major Ash Elem. (Dry)	
SIO2	1.63
Al2O3	0.28
TiO2	0.01
Fe2O3	0.19
CaO	41.16
MgO	0.16
Na2O	0.09
K2O	0.06
P2O5	
SO3	53.06
Undetermined	3.36

Total Moisture

Sulfur Forms (Dry)
Pyritic Sulfur
Sulfate
Organic
Sulfur, Total

Ash Fusion Reducing Temp (F)
Initial
Softening
Hemispherical,
Fluid

Ash Fusion Oxidizing
Initial
Softening
Hemispherical,
Fluid

Misc.	
Analysis	Value
%solids, a	30.5
%moistur	43.3
density, a	1.120

Trace Elements (ppm)	
Hg	0.507
F	

HGI/FSI
HGI
FSI

As Determined Moisture 0.77 %

These values have been reviewed and are approved for transmission.

CONSOL ENERGY

Research and Development
www.consolenergy.com
4000 Brownsville Rd.
South Park, PA 15129

Sample Description.: **FGD SLURRY SOLIDS TEST 4**

Sample No.: FGD SOLIDS-4
Date Received: 06/21/2005
Date Completed: 08/16/2005

Analytical No.: **20052626**
Project No.: 1621 -087 -000
Submitted By: JAW/SCT/JEL

Proximate (Dry)	Wt%
Ash	97.99
Volatile Matter	
Fixed Carbon	
BTU/lb	
MAF BTU/lb	

Ash Fusion Reducing Temp (F)	
Initial	
Softening	
Hemispherical	
Fluid	

Trace Elements (ppm)	
Hg	0.575
F	

Ultimate (Dry)%	
Carbon	0.47
Hydrogen	
Nitrogen	
Chlorine	0.0245
Sulfur, Total	
Ash	97.99
Oxygen (DIFF)	

Ash Fusion Oxidizing	
Initial	
Softening	
Hemispherical	
Fluid	

Major Ash Elem. (Dry)	
SiO2	1.63
Al2O3	0.27
TiO2	0.01
Fe2O3	0.18
CaO	41.02
MgO	0.17
Na2O	0.10
K2O	0.06
P2O5	
SO3	52.60
Undetermined	3.96

Misc.	
Analysis	Value
%solids, a	31.7
%moistur	44.4
density, a	1.124

Total Moisture

Sulfur Forms (Dry)
Pyritic Sulfur
Sulfate
Organic
Sulfur, Total

HGI/FSI
HGI
FSI

As Determined Moisture 0.79 %

These values have been reviewed and are approved for transmission.

CONSOLENERGY

Research and Development
www.consolenergy.com
4000 Brownsville Rd.
South Park, PA 15129

Sample Description.: **FGD SLURRY SOLIDS TEST 5**
Sample No.: FGD SOLIDS 5
Date Received: 06/21/2005
Date Completed: 08/16/2005

Analytical No.: **20052627**
Project No.: 1621 -087 -000
Submitted By: JAW/SCT/JEL

Proximate (Dry)	Wt%
Ash	96.85
Volatile Matter	
Fixed Carbon	
BTU/lb	
MAF BTU/lb	

Ultimate (Dry)%	
Carbon	0.50
Hydrogen	
Nitrogen	
Chlorine	0.0302
Sulfur, Total	
Ash	96.85
Oxygen (DIFF)	

Major Ash Elem. (Dry)	
SIO2	1.91
Al2O3	0.29
TiO2	0.01
Fe2O3	0.20
CaO	40.00
MgO	0.15
Na2O	0.10
K2O	0.06
P2O5	0.01
SO3	50.38
Undetermined	6.89

Total Moisture

Sulfur Forms (Dry)
Pyritic Sulfur
Sulfate
Organic
Sulfur, Total

Ash Fusion Reducing Temp (F)
Initial
Softening
Hemispherical
Fluid

Ash Fusion Oxidizing
Initial
Softening
Hemispherical
Fluid

Misc.	
Analysis	Value
%solids, a	30.6
%moistur	42.3
density, a	1.115

HGI/FSI
HGI
FSI

Trace Elements (ppm)	
Hg	0.549
F	

As Determined Moisture 1.08 %

These values have been reviewed and are approved for transmission.

CONSOLENERGY

Research and Development
www.consolenergy.com
4000 Brownsville Rd.
South Park, PA 15129

Sample Description.: **FGD SLURRY SOLIDS TEST 6**
Sample No.: FGD SOLIDS 6
Date Received: 06/21/2005
Date Completed: 08/16/2005

Analytical No.: **20052628**
Project No.: 1621 -087 -000
Submitted By: JAW/SCT/JEL

Proximate (Dry)	Wt%
Ash	98.78
Volatile Matter	
Fixed Carbon	
BTU/lb	
MAF BTU/lb	

Ultimate (Dry)%	
Carbon	0.53
Hydrogen	
Nitrogen	
Chlorine	0.0476
Sulfur, Total	
Ash	98.78
Oxygen (DIFF)	

Major Ash Elem. (Dry)	
SIO2	1.79
Al2O3	0.27
TIO2	0.01
Fe2O3	0.18
CaO	40.00
MgO	0.16
Na2O	0.12
K2O	0.06
P2O5	0.01
SO3	49.97
Undetermined	7.43

Total Moisture

Sulfur Forms (Dry)
Pyritic Sulfur
Sulfate
Organic
Sulfur, Total

Ash Fusion Reducing Temp (F)
Initial
Softening
Hemispherical
Fluid

Ash Fusion Oxidizing
Initial
Softening
Hemispherical
Fluid

Misc.	
Analysis	Value
%solids, a	32.6
%moistur	46.1
density, a	1.122

HGI/FSI
HGI
FSI

Trace Elements (ppm)	
Hg	0.515
F	

As Determined Moisture 1.12 %

These values have been reviewed and are approved for transmission.

CONSOL ENERGY
Research and Development
www.consolenergy.com
4000 Brownsville Rd.
South Park, PA 15129

FGD SLURRY LIQUID TEST 1

Sample No.: FGD LIQ 1
Date Received: 06/22/2005
Date Completed: 08/24/2005

Analytical No.: **20052642**
Project No.: 1621 -087 -000

Submitter: JAW/SCT/JEL

Parameter	Water Result (mg/L unless noted otherwise) Value	Value	Units	Avg Value
pH				
Acidity, $CaCO_3$				
Alkalinity, $CaCO_3$				
Hydroxide, $CaCO_3$				
Carbonate, $CaCO_3$				
Bicarbonate, $CaCO_3$				
Total Suspended Solids				
Total Dissolved Solids				
Specific Conductivity				
Hardness				
Turbidity				
Osmotic Pressure				
Dissolved Oxygen				
Ammonia, N	<10			
Total Elements				
Aluminum	<0.50			
Calcium	178.37			
Iron	1.69			
Magnesium	979.20			
Manganese	1.44			
Potassium	16.45			
Phosphorous				
Silicon	22.61			
Sodium	698.68			
Chromium	<0.50			
Anions:				
Sulfate	4542.33			
Chloride	750	800		
Nitrate, N see NO_3	492			
Nitrite, N				
Bromide				
Fluoride				

Quality Control Calculations

Ion Sum	9372.23
Cation Sum	120.35
Anion Sum	151.63
Ion Balance	12.73
% Ion Imbalance	-11.50

Hg 1.1

These values have been reviewed and are approved for transmission.

CONSOLENERGY
Research and Development
www.consolenergy.com
4000 Brownsville Rd.
South Park, PA 15129

FGD SLURRY LIQUID TEST 2

Sample No.: FGD LIQ 2
Date Received: 06/22/2005
Date Completed: 08/24/2005

Analytical No.: **20052643**
Project No.: 1621 -087 -000

Submitter: JAW/SCT/JEL

Parameter	Water Result (mg/L unless noted otherwise) Value	Value	Units	Avg Value
pH				
Acidity, $CaCO_3$				
Alkalinity, $CaCO_3$				
Hydroxide, $CaCO_3$				
Carbonate, $CaCO_3$				
Bicarbonate, $CaCO_3$				
Total Suspended Solids				
Total Dissolved Solids				
Specific Conductivity				
Hardness				
Turbidity				
Osmotic Pressure				
Dissolved Oxygen				
Ammonia, N	<10			
Total Elements				
Aluminum	<0.50			
Calcium	325.29			
Iron	0.63			
Magnesium	848.05			
Manganese	1.23			
Potassium	14.32			
Phosphorous				
Silicon	21.34			
Sodium	651.69			
Chromium	<0.50			
Anions:				
Sulfate	4505.27			
Chloride	1020			
Nitrate, N NO_3	481			
Nitrite, N				
Bromide				
Fluoride				

Quality Control Calculations

Ion Sum	9496.83
Cation Sum	114.75
Anion Sum	156.98
Ion Balance	16.63
% Ion Imbalance	-15.54

Hg 2.6

These values have been reviewed and are approved for transmission.

CONSOL ENERGY
Research and Development
www.consolenergy.com
4000 Brownsville Rd.
South Park, PA 15129

FGD SLURRY LIQUID TEST 3

Sample No.: FGD LIQ 3
Date Received: 06/22/2005
Date Completed: 08/24/2005

Analytical No.: **20052644**
Project No.: 1621 -087 -000

Submitter: JAW/SCT/JEL

Parameter	Water Result (mg/L unless noted otherwise) Value	Value	Units	Avg Value
pH				
Acidity, $CaCO_3$				
Alkalinity, $CaCO_3$				
Hydroxide, $CaCO_3$				
Carbonate, $CaCO_3$				
Bicarbonate, $CaCO_3$				
Total Suspended Solids				
Total Dissolved Solids				
Specific Conductivity				
Hardness				
Turbidity				
Osmotic Pressure				
Dissolved Oxygen				
Ammonia, N	<10			
Total Elements				
Aluminum	<0.50			
Calcium	124.90			
Iron	1.07			
Magnesium	1078.28			
Manganese	1.51			
Potassium	16.37			
Phosphorous				
Silicon	23.83			
Sodium	788.42			
Chromium	<0.50			
Anions:				
Sulfate	4733.48			
Chloride	1630			
Nitrate, N NO_3	707			
Nitrite, N				
Bromide				
Fluoride				

Quality Control Calculations

Ion Sum	11505.33
Cation Sum	129.71
Anion Sum	195.08
Ion Balance	20.88
% Ion Imbalance	-20.13

Hg 1.8

These values have been reviewed and are approved for transmission.

CONSOL ENERGY
Research and Development
www.consolenergy.com
4000 Brownsville Rd.
South Park, PA 15129

FGD SLURRY LIQUID TEST 4

Sample No.: FGD LIQ 4
Date Received: 06/22/2005
Date Completed: 08/24/2005

Analytical No.: **20052645**
Project No.: 1621 -087 -000

Submitter: JAW/SCT/JEL

Parameter	Water Result (mg/L unless noted otherwise) Value	Value	Units	Avg Value
pH				
Acidity, $CaCO_3$				
Alkalinity, $CaCO_3$				
Hydroxide, $CaCO_3$				
Carbonate, $CaCO_3$				
Bicarbonate, $CaCO_3$				
Total Suspended Solids				
Total Dissolved Solids				
Specific Conductivity				
Hardness				
Turbidity				
Osmotic Pressure				
Dissolved Oxygen				
Ammonia, N	<10			
Total Elements				
Aluminum	<0.50			
Calcium	241.81			
Iron	<0.50			
Magnesium	1034.32			
Manganese	1.31			
Potassium	19.04			
Phosphorous				
Silicon	24.64			
Sodium	797.87			
Chromium	<0.50			
Anions:				
Sulfate	5221.97			
Chloride	1560			
Nitrate, ~~N~~ SOW NO_3	738	739		
Nitrite, N				
Bromide				
Fluoride				

Quality Control Calculations

Ion Sum	12147.14
Cation Sum	132.37
Anion Sum	205.53
Ion Balance	22.22
% Ion Imbalance	-21.65

Hg 1.8

These values have been reviewed and are approved for transmission.

CONSOLENERGY
Research and Development
www.consolenergy.com
4000 Brownsville Rd.
South Park, PA 15129

FGD SLURRY LIQUID TEST 5

Sample No.: FGD LIQ 5
Date Received: 06/22/2005
Date Completed: 08/24/2005

Analytical No.: **20052646**
Project No.: 1621 -087 -000

Submitter: JAW/SCT/JEL

Parameter	Water Result (mg/L unless noted otherwise) Value	Value	Units	Avg Value
pH				
Acidity, $CaCO_3$				
Alkalinity, $CaCO_3$				
Hydroxide, $CaCO_3$				
Carbonate, $CaCO_3$				
Bicarbonate, $CaCO_3$				
Total Suspended Solids				
Total Dissolved Solids				
Specific Conductivity				
Hardness				
Turbidity				
Osmotic Pressure				
Dissolved Oxygen				
Ammonia, N	<10			
Total Elements				
Aluminum	<0.50			
Calcium	133.43			
Iron	0.98			
Magnesium	992.57			
Manganese	1.43			
Potassium	18.55			
Phosphorous				
Silicon	23.00			
Sodium	776.46			
Chromium	<0.50			
Anions:				
Sulfate	4661.82			
Chloride	1560			
Nitrate, N SW NO_3	622			
Nitrite, N				
Bromide				
Fluoride				

Quality Control Calculations

Ion Sum	10900.08
Cation Sum	122.62
Anion Sum	185.54
Ion Balance	21.10
% Ion Imbalance	-20.42

Hg 2.2

These values have been reviewed and are approved for transmission.

CONSOLENERGY
Research and Development
www.consolenergy.com
4000 Brownsville Rd.
South Park, PA 15129

FGD SLURRY LIQUID TEST 6

Sample No.: FGD LIQ 6
Date Received: 06/22/2005
Date Completed: 08/24/2005

Analytical No.: **20052647**
Project No.: 1621 -087 -000

Submitter: JAW/SCT/JEL

Parameter	Water Result (mg/L unless noted otherwise) Value	Value	Units	Avg Value
pH				
Acidity, $CaCO_3$				
Alkalinity, $CaCO_3$				
Hydroxide, $CaCO_3$				
Carbonate, $CaCO_3$				
Bicarbonate, $CaCO_3$				
Total Suspended Solids				
Total Dissolved Solids				
Specific Conductivity				
Hardness				
Turbidity				
Osmotic Pressure				
Dissolved Oxygen				
Ammonia, N	<10			
Total Elements				
Aluminum	<0.50			
Calcium	181.38			
Iron	1.04			
Magnesium	1031.50			
Manganese	1.43			
Potassium	18.47			
Phosphorous				
Silicon	24.30			
Sodium	813.82			
Chromium	<0.50			
Anions:				
Sulfate	4631.60			
Chloride	2320			
Nitrate, ~~N~~ NO_3	634			
Nitrite, N				
Bromide				
Fluoride				

Quality Control Calculations

Ion Sum	11807.23
Cation Sum	129.84
Anion Sum	207.20
Ion Balance	23.32
% Ion Imbalance	-22.95

Hg 4.1

These values have been reviewed and are approved for transmission.

CONSOL ENERGY

Research and Development
www.consolenergy.com
4000 Brownsville Rd.
South Park, PA 15129

Sample Description.: **FGD MAKEUP SOLIDS TEST 1**
Sample No.: FGD MAKEUP 1
Date Received: 06/21/2005
Date Completed: 08/16/2005

Analytical No.: **20052629**
Project No.: 1621 -087 -000
Submitted By: JAW/SCT/JEL

Proximate (Dry)	Wt%
Ash	100.07
Volatile Matter	
Fixed Carbon	
BTU/lb	
MAF BTU/lb	

Ash Fusion Reducing Temp (F)	
Initial	
Softening	
Hemispherical.	
Fluid	

Trace Elements (ppm)	
Hg	0.631
F	

Ultimate (Dry)%	
Carbon	0.29
Hydrogen	
Nitrogen	
Chlorine	0.0189
Sulfur, Total	
Ash	100.07
Oxygen (DIFF)	

Ash Fusion Oxidizing	
Initial	
Softening	
Hemispherical.	
Fluid	

Major Ash Elem. (Dry)	
SiO2	1.55
Al2O3	0.30
TiO2	0.01
Fe2O3	0.18
CaO	37.21
MgO	0.12
Na2O	0.14
K2O	0.08
P2O5	0.01
SO3	63.02
Undetermined	-2.62

Total Moisture

Misc.	
Analysis	Value
%solids, a	8.90
%moistur	44.7
density, a	1.043

Sulfur Forms (Dry)
Pyritic Sulfur
Sulfate
Organic
Sulfur, Total

HGI/FSI
HGI
FSI

As Determined Moisture 2 %

These values have been reviewed and are approved for transmission.

CONSOL ENERGY

Research and Development
www.consolenergy.com
4000 Brownsville Rd.
South Park, PA 15129

Sample Description.: FGD MAKEUP SOLIDS TEST 2
Sample No.: FGD MAKEUP 2
Date Received: 06/21/2005
Date Completed: 08/16/2005

Analytical No.: 20052630
Project No.: 1621 -087 -000
Submitted By: JAW/SCT/JEL

Proximate (Dry)	Wt%
Ash	98.18
Volatile Matter	
Fixed Carbon	
BTU/lb	
MAF BTU/lb	

Ultimate (Dry)%	
Carbon	0.54
Hydrogen	
Nitrogen	
Chlorine	0.0151
Sulfur, Total	
Ash	98.18
Oxygen (DIFF)	

Major Ash Elem. (Dry)	
SiO2	1.60
Al2O3	0.31
TiO2	0.02
Fe2O3	0.20
CaO	40.17
MgO	0.13
Na2O	0.09
K2O	0.06
P2O5	<0.01
SO3	50.18
Undetermined	7.24

Total Moisture

Sulfur Forms (Dry)
Pyritic Sulfur
Sulfate
Organic
Sulfur, Total

Ash Fusion Reducing Temp (F)
Initial
Softening
Hemispherical
Fluid

Ash Fusion Oxidizing
Initial
Softening
Hemispherical
Fluid

Misc.	
Analysis	Value
%solids, a	8.00
%moistur	46.2
density, a	1.034

Trace Elements (ppm)	
Hg	0.585
F	

HGI/FSI
HGI
FSI

As Determined Moisture 1.9 %

These values have been reviewed and are approved for transmission.

CONSOL ENERGY

Research and Development
www.consolenergy.com
4000 Brownsville Rd.
South Park, PA 15129

Sample Description.: **FGD MAKEUP SOLIDS TEST 3**
Sample No.: FGD MAKEUP 3
Date Received: 06/21/2005
Date Completed: 08/16/2005

Analytical No.: **20052631**
Project No.: 1621 -087 -000
Submitted By: JAW/SCT/JEL

Proximate (Dry)	Wt%
Ash	99.89
Volatile Matter	
Fixed Carbon	
BTU/lb	
MAF BTU/lb	

Ash Fusion Reducing Temp (F)	
Initial	
Softening	
Hemispherical	
Fluid	

Trace Elements (ppm)	
Hg	0.570
F	

Ultimate (Dry)%	
Carbon	0.18
Hydrogen	
Nitrogen	
Chlorine	0.0156
Sulfur, Total	
Ash	99.89
Oxygen (DIFF)	

Ash Fusion Oxidizing	
Initial	
Softening	
Hemispherical	
Fluid	

Major Ash Elem. (Dry)	
SiO2	1.37
Al2O3	0.30
TiO2	0.02
Fe2O3	0.18
CaO	40.24
MgO	0.11
Na2O	0.11
K2O	0.05
P2O5	0.01
SO3	52.35
Undetermined	5.27

Misc.	
Analysis	Value
%solids, a	3.7
%moistur	50.8
density, a	1.019

Total Moisture

Sulfur Forms (Dry)
Pyritic Sulfur
Sulfate
Organic
Sulfur, Total

HGI/FSI
HGI
FSI

As Determined Moisture 0.71 %

These values have been reviewed and are approved for transmission.

CONSOL ENERGY

Research and Development
www.consolenergy.com
4000 Brownsville Rd.
South Park, PA 15129

Sample Description.: **FGD MAKEUP SOLIDS TEST 4**
Sample No.: FGD MAKEUP 4
Date Received: 06/21/2005
Date Completed: 08/16/2005

Analytical No.: **20052632**
Project No.: 1621 -087 -000
Submitted By: JAW/SCT/JEL

Proximate (Dry)	Wt%
Ash	97.07
Volatile Matter	
Fixed Carbon	
BTU/lb	
MAF BTU/lb	

Ultimate (Dry)%	
Carbon	0.35
Hydrogen	
Nitrogen	
Chlorine	0.0086
Sulfur, Total	
Ash	97.07
Oxygen (DIFF)	

Major Ash Elem. (Dry)	
SiO2	1.39
Al2O3	0.28
TiO2	0.01
Fe2O3	0.17
CaO	40.27
MgO	0.11
Na2O	0.08
K2O	0.06
P2O5	<0.01
SO3	52.47
Undetermined	5.16

Total Moisture

Sulfur Forms (Dry)
Pyritic Sulfur
Sulfate
Organic
Sulfur, Total

Ash Fusion Reducing Temp (F)
Initial
Softening
Hemispherical.
Fluid

Ash Fusion Oxidizing
Initial
Softening
Hemispherical.
Fluid

Misc.	
Analysis	Value
%solids, a	7.89
%moistur	48.2
density, a	1.032

HGI/FSI
HGI
FSI

Trace Elements (ppm)	
Hg	0.536
F	

As Determined Moisture 1.16 %

These values have been reviewed and are approved for transmission.

CONSOLENERGY

Research and Development
www.consolenergy.com
4000 Brownsville Rd.
South Park, PA 15129

Sample Description.: **FGD MAKEUP SOLIDS TEST 5**
Sample No.: FGD MAKEUP 5
Date Received: 06/21/2005
Date Completed: 08/16/2005

Analytical No.: **20052633**
Project No.: 1621 -087 -000
Submitted By: JAW/SCT/JEL

Proximate (Dry)	Wt%
Ash	98.72
Volatile Matter	
Fixed Carbon	
BTU/lb	
MAF BTU/lb	

Ash Fusion Reducing Temp (F)	
Initial	
Softening	
Hemispherical.	
Fluid	

Trace Elements (ppm)	
Hg	0.556
F	

Ultimate (Dry)%	
Carbon	0.23
Hydrogen	
Nitrogen	
Chlorine	0.0095
Sulfur, Total	
Ash	98.72
Oxygen (DIFF)	

Ash Fusion Oxidizing	
Initial	
Softening	
Hemispherical.	
Fluid	

Major Ash Elem. (Dry)	
SiO2	1.29
Al2O3	0.27
TiO2	0.01
Fe2O3	0.16
CaO	40.33
MgO	0.10
Na2O	0.09
K2O	0.08
P2O5	<0.01
SO3	53.30
Undetermined	4.37

Misc.	
Analysis	Value
%solids, a	6.55
%moistur	53.6
density, a	1.020

Total Moisture

Sulfur Forms (Dry)
Pyritic Sulfur
Sulfate
Organic
Sulfur, Total

HGI/FSI
HGI
FSI

As Determined Moisture 0.55 %

These values have been reviewed and are approved for transmission.

CONSOLENERGY

Research and Development
www.consolenergy.com
4000 Brownsville Rd.
South Park, PA 15129

Sample Description.: **FGD MAKEUP SOLIDS TEST 6**
Sample No.: FGD MAKEUP 6
Date Received: 06/21/2005
Date Completed: 08/16/2005

Analytical No.: **20052634**
Project No.: 1621 -087 -000
Submitted By: JAW/SCT/JEL

Proximate (Dry)	Wt%
Ash	96.89
Volatile Matter	
Fixed Carbon	
BTU/lb	
MAF BTU/lb	

Ash Fusion Reducing Temp (F)	
Initial	
Softening	
Hemispherical.	
Fluid	

Trace Elements (ppm)	
Hg	0.545
F	

Ultimate (Dry)%	
Carbon	0.42
Hydrogen	
Nitrogen	
Chlorine	0.0134
Sulfur, Total	
Ash	96.89
Oxygen (DIFF)	

Ash Fusion Oxidizing	
Initial	
Softening	
Hemispherical.	
Fluid	

Major Ash Elem. (Dry)	
SiO2	1.35
Al2O3	0.28
TiO2	0.01
Fe2O3	0.16
CaO	39.23
MgO	0.11
Na2O	0.08
K2O	0.08
P2O5	<0.01
SO3	55.27
Undetermined	3.43

Total Moisture

Misc.	
Analysis	Value
%solids, a	9.50
%moistur	54.5
density, a	1.034

Sulfur Forms (Dry)
Pyritic Sulfur
Sulfate
Organic
Sulfur, Total

HGI/FSI
HGI
FSI

As Determined Moisture 2 %

These values have been reviewed and are approved for transmission.

CONSOL ENERGY

Research and Development
www.consolenergy.com
4000 Brownsville Rd.
South Park, PA 15129

FGD MAKEUP LIQUID TEST 1

Sample No.: FGD MK LIQ 1
Date Received: 06/22/2005
Date Completed: 08/24/2005

Analytical No.: **20052648**
Project No.: 1621 -087 -000

Submitter: JAW/SCT/JEL

Water Result
(mg/L unless noted otherwise)

Parameter	Value	Value	Units	Avg Value
pH				
Acidity, $CaCO_3$				
Alkalinity, $CaCO_3$				
Hydroxide, $CaCO_3$				
Carbonate, $CaCO_3$				
Bicarbonate, $CaCO_3$				
Total Suspended Solids				
Total Dissolved Solids				
Specific Conductivity				
Hardness				
Turbidity				
Osmotic Pressure				
Dissolved Oxygen				
Ammonia, N	<10			
Total Elements				
Aluminum	<0.50			
Calcium	250.90			
Iron	4.67			
Magnesium	616.12			
Manganese	1.37			
Potassium	14.53			
Phosphorous				
Silicon	16.80			
Sodium	1647.03			
Chromium	<0.50			
Anions:				
Sulfate	4304.47			
Chloride	3050			
Nitrate, N see NO_3	142			
Nitrite, N				
Bromide				
Fluoride				

Quality Control Calculations

Ion Sum	10518.01
Cation Sum	135.42
Anion Sum	185.83
Ion Balance	16.88
% Ion Imbalance	-15.69

Hg 2.3

These values have been reviewed and are approved for transmission.

CONSOLENERGY

Research and Development
www.consolenergy.com
4000 Brownsville Rd.
South Park, PA 15129

FGD MAKEUP LIQUID TEST 2

Sample No.: FGD MK LIQ 2
Date Received: 06/22/2005
Date Completed: 08/24/2005

Analytical No.: **20052649**
Project No.: 1621 -087 -000

Submitter: JAW/SCT/JEL

Water Result
(mg/L unless noted otherwise)

Parameter	Value	Value	Units	Avg Value
pH				
Acidity, $CaCO_3$				
Alkalinity, $CaCO_3$				
Hydroxide, $CaCO_3$				
Carbonate, $CaCO_3$				
Bicarbonate, $CaCO_3$				
Total Suspended Solids				
Total Dissolved Solids				
Specific Conductivity				
Hardness				
Turbidity				
Osmotic Pressure				
Dissolved Oxygen				
Ammonia, N	<10			
Total Elements				
Aluminum	<0.50			
Calcium	104.84			
Iron	2.70			
Magnesium	811.43			
Manganese	1.40			
Potassium	14.92			
Phosphorous				
Silicon	20.39			
Sodium	1157.51			
Chromium	<0.50			
Anions:				
Sulfate	4784.06			
Chloride	1130			
Nitrate, N SW NO_3	439			
Nitrite, N				<1.0
Bromide				
Fluoride				

Quality Control Calculations

Ion Sum	9951.19
Cation Sum	122.84
Anion Sum	162.89
Ion Balance	15.22
% Ion Imbalance	-14.02

These values have been reviewed and are approved for transmission.

CONSOLENERGY
Research and Development
www.consolenergy.com
4000 Brownsville Rd.
South Park, PA 15129

FGD MAKEUP LIQUID TEST 3

Sample No.: FGD MK LIQ 3
Date Received: 06/22/2005
Date Completed: 08/24/2005

Analytical No.: **20052650**
Project No.: 1621 -087 -000

Submitter: JAW/SCT/JEL

Water Result
(mg/L unless noted otherwise)

Parameter	Value	Value	Units	Avg Value
pH				
Acidity, $CaCO_3$				
Alkalinity, $CaCO_3$				
Hydroxide, $CaCO_3$				
Carbonate, $CaCO_3$				
Bicarbonate, $CaCO_3$				
Total Suspended Solids				
Total Dissolved Solids				
Specific Conductivity				
Hardness				
Turbidity				
Osmotic Pressure				
Dissolved Oxygen				
Ammonia, N	<10			
Total Elements				
Aluminum	<0.50			
Calcium	533.18			
Iron	1.32			
Magnesium	655.96			
Manganese	0.99			
Potassium	11.66			
Phosphorous				
Silicon	18.05			
Sodium	1139.95			
Chromium	<0.50			
Anions:				
Sulfate	5496.41			
Chloride	1070	1130		
Nitrate, N ~~N~~ NO_3	477			
Nitrite, N				
Bromide				
Fluoride				

Quality Control Calculations

Ion Sum	11052.10
Cation Sum	130.52
Anion Sum	179.60
Ion Balance	16.98
% Ion Imbalance	-15.83

Hg 1.0

These values have been reviewed and are approved for transmission.

CONSOLENERGY
Research and Development
www.consolenergy.com
4000 Brownsville Rd.
South Park, PA 15129

FGD MAKEUP LIQUID TEST 4

Sample No.: FGD MK LIQ 4
Date Received: 06/22/2005
Date Completed: 08/24/2005

Analytical No.: **20052651**
Project No.: 1621 -087 -000

Submitter: JAW/SCT/JEL

Water Result
(mg/L unless noted otherwise)

Parameter	Value	Value	Units	Avg Value
pH				
Acidity, $CaCO_3$				
Alkalinity, $CaCO_3$				
Hydroxide, $CaCO_3$				
Carbonate, $CaCO_3$				
Bicarbonate, $CaCO_3$				
Total Suspended Solids				
Total Dissolved Solids				
Specific Conductivity				
Hardness				
Turbidity				
Osmotic Pressure				
Dissolved Oxygen				
Ammonia, N	<10			
Total Elements				
Aluminum	<0.50			
Calcium	296.34			
Iron	2.25			
Magnesium	846.81			
Manganese	1.36			
Potassium	17.41			
Phosphorous				
Silicon	22.22			
Sodium	986.81			
Chromium	<0.50			
Anions:				
Sulfate	5124.02			
Chloride	970			
Nitrate, ~~N~~ see NO_3	348			
Nitrite, N				
Bromide				
Fluoride				

Quality Control Calculations

Ion Sum	9786.29
Cation Sum	127.93
Anion Sum	158.96
Ion Balance	12.07
% Ion Imbalance	-10.82

Hg 1.2

These values have been reviewed and are approved for transmission.

CONSOLENERGY

Research and Development
www.consolenergy.com
4000 Brownsville Rd.
South Park, PA 15129

FGD MAKEUP LIQUID TEST 5

Sample No.: FGD MK LIQ 5
Date Received: 06/22/2005
Date Completed: 08/24/2005

Analytical No.: **20052652**
Project No.: 1621 -087 -000

Submitter: JAW/SCT/JEL

Water Result
(mg/L unless noted otherwise)

Parameter	Value	Value	Units	Avg Value
pH				
Acidity, $CaCO_3$				
Alkalinity, $CaCO_3$				
Hydroxide, $CaCO_3$				
Carbonate, $CaCO_3$				
Bicarbonate, $CaCO_3$				
Total Suspended Solids				
Total Dissolved Solids				
Specific Conductivity				
Hardness				
Turbidity				
Osmotic Pressure				
Dissolved Oxygen				
Ammonia, N	<10			
Total Elements				
Aluminum	<0.50			
Calcium	296.22			
Iron	1.65			
Magnesium	915.22			
Manganese	1.34			
Potassium	18.60			
Phosphorous				
Silicon	23.60			
Sodium	1169.68			
Chromium	<0.50			
Anions:				
Sulfate	5688.03			
Chloride	1260	1280		
Nitrate, N ~~N~~ NO_3	444			
Nitrite, N				
Bromide				
Fluoride				

Quality Control Calculations

Ion Sum	11327.22
Cation Sum	141.51
Anion Sum	186.03
Ion Balance	14.89
% Ion Imbalance	-13.59

Hg 1.4

These values have been reviewed and are approved for transmission.

CONSOL ENERGY
Research and Development
www.consolenergy.com
4000 Brownsville Rd.
South Park, PA 15129

FGD MAKEUP LIQUID TEST 6

Sample No.: FGD MK LIQ 6
Date Received: 06/22/2005
Date Completed: 08/24/2005

Analytical No.: **20052653**
Project No.: 1621 -087 -000

Submitter: JAW/SCT/JEL

Water Result
(mg/L unless noted otherwise)

Parameter	Value	Value	Units	Avg Value
pH				
Acidity, $CaCO_3$				
Alkalinity, $CaCO_3$				
Hydroxide, $CaCO_3$				
Carbonate, $CaCO_3$				
Bicarbonate, $CaCO_3$				
Total Suspended Solids				
Total Dissolved Solids				
Specific Conductivity				
Hardness				
Turbidity				
Osmotic Pressure				
Dissolved Oxygen				
Ammonia, N	<10			
Total Elements				
Aluminum	<0.50			
Calcium	368.61			
Iron	1.60			
Magnesium	876.28			
Manganese	1.60			
Potassium	17.06			
Phosphorous				
Silicon	22.96			
Sodium	964.55			
Chromium	<0.50			
Anions:				
Sulfate	4126.69			
Chloride	3500			
Nitrate, N Sep NO3	433	413		
Nitrite, N				
Bromide				
Fluoride				

Quality Control Calculations

Ion Sum	11729.86
Cation Sum	132.96
Anion Sum	214.89
Ion Balance	23.83
% Ion Imbalance	-23.55

Hg 2.3

These values have been reviewed and are approved for transmission.

CONSOLENERGY
Research and Development
www.consolenergy.com
4000 Brownsville Rd.
South Park, PA 15129

ME WASH WATER TEST 1

Sample No.: ME WW 1
Date Received: 06/22/2005
Date Completed: 08/24/2005

Analytical No.: **20052654**
Project No.: 1621 -087 -000

Submitter: JAW/SCT/JEL

Water Result
(mg/L unless noted otherwise)

Parameter	Value	Value	Units	Avg Value
pH				
Acidity, $CaCO_3$				
Alkalinity, $CaCO_3$				
Hydroxide, $CaCO_3$				
Carbonate, $CaCO_3$				
Bicarbonate, $CaCO_3$				
Total Suspended Solids				
Total Dissolved Solids				
Specific Conductivity				
Hardness				
Turbidity				
Osmotic Pressure				
Dissolved Oxygen				
Ammonia, N	<10			
Total Elements				
Aluminum	<0.05			
Calcium	84.74			
Iron	<0.05			
Magnesium	24.41			
Manganese	0.18			
Potassium	1.83			
Phosphorous				
Silicon	5.005			
Sodium	9.07			
Chromium	<0.05			
Anions:				
Sulfate	41.00			
Chloride	40			
Nitrate, N SW NO_3	<2.0			
Nitrite, N				
Bromide				
Fluoride				

Quality Control Calculations

Ion Sum	201.23
Cation Sum	6.68
Anion Sum	1.98
Ion Balance	-34.26
% Ion Imbalance	54.25

<1.0

These values have been reviewed and are approved for transmission.

CONSOLENERGY
Research and Development
www.consolenergy.com
4000 Brownsville Rd.
South Park, PA 15129

ME WASH WATER TEST 2

Sample No.: ME WW 2
Date Received: 06/22/2005
Date Completed: 08/24/2005

Analytical No.: **20052655**
Project No.: 1621 -087 -000

Submitter: JAW/SCT/JEL

Parameter	Water Result (mg/L unless noted otherwise) Value	Value	Units	Avg Value
pH				
Acidity, $CaCO_3$				
Alkalinity, $CaCO_3$				
Hydroxide, $CaCO_3$				
Carbonate, $CaCO_3$				
Bicarbonate, $CaCO_3$				
Total Suspended Solids				
Total Dissolved Solids				
Specific Conductivity				
Hardness				
Turbidity				
Osmotic Pressure				
Dissolved Oxygen				
Ammonia, N	<10			
Total Elements				
Aluminum	<0.05			
Calcium	82.04			
Iron	<0.05			
Magnesium	23.86			
Manganese	0.16			
Potassium	1.60			
Phosphorous				
Silicon	4.919			
Sodium	8.75			
Chromium	<0.05			
Anions:				
Sulfate	39.81			
Chloride	30			
Nitrate, N see NO_3	<2.0			
Nitrite, N				
Bromide				
Fluoride				

Quality Control Calculations

Ion Sum	186.22
Cation Sum	6.48
Anion Sum	1.68
Ion Balance	-36.29
% Ion Imbalance	58.93

<1.0

These values have been reviewed and are approved for transmission.

CONSOL ENERGY
Research and Development
www.consolenergy.com
4000 Brownsville Rd.
South Park, PA 15129

ME WASH/WELL WATER TEST 3

Sample No.: ME WW 3
Date Received: 06/22/2005
Date Completed: 08/24/2005

Analytical No.: **20052656**
Project No.: 1621 -087 -000

Submitter: JAW/SCT/JEL

Water Result
(mg/L unless noted otherwise)

Parameter	Value	Value	Units	Avg Value
pH				
Acidity, $CaCO_3$				
Alkalinity, $CaCO_3$				
Hydroxide, $CaCO_3$				
Carbonate, $CaCO_3$				
Bicarbonate, $CaCO_3$				
Total Suspended Solids				
Total Dissolved Solids				
Specific Conductivity				
Hardness				
Turbidity				
Osmotic Pressure				
Dissolved Oxygen				
Ammonia, N	<10			
Total Elements				
Aluminum	<0.05			
Calcium	83.98			
Iron	0.15			
Magnesium	24.47			
Manganese	0.14			
Potassium	1.49			
Phosphorous				
Silicon	4.833			
Sodium	8.21			
Chromium	<0.05			
Anions:				
Sulfate	39.64			
Chloride	33			
Nitrate, N see NO_3	<2.0			
Nitrite, N				<1.0
Bromide				
Fluoride				

Quality Control Calculations

Ion Sum	191.08
Cation Sum	6.61
Anion Sum	1.76
Ion Balance	-36.28
% Ion Imbalance	58.01

These values have been reviewed and are approved for transmission.

CONSOLENERGY
Research and Development
www.consolenergy.com
4000 Brownsville Rd.
South Park, PA 15129

ME WASH WATER TEST 4

Sample No.: ME WW 4
Date Received: 06/22/2005
Date Completed: 08/24/2005

Analytical No.: **20052657**
Project No.: 1621 -087 -000

Submitter: JAW/SCT/JEL

Water Result
(mg/L unless noted otherwise)

Parameter	Value	Value	Units	Avg Value
pH				
Acidity, $CaCO_3$				
Alkalinity, $CaCO_3$				
Hydroxide, $CaCO_3$				
Carbonate, $CaCO_3$				
Bicarbonate, $CaCO_3$				
Total Suspended Solids				
Total Dissolved Solids				
Specific Conductivity				
Hardness				
Turbidity				
Osmotic Pressure				
Dissolved Oxygen				
Ammonia, N	<10			
Total Elements				
Aluminum	<0.05			
Calcium	85.36			
Iron	0.05			
Magnesium	24.76			
Manganese	0.16			
Potassium	1.51			
Phosphorous				
Silicon	4.995			
Sodium	8.46			
Chromium	<0.05			
Anions:				
Sulfate	40.66			
Chloride	33			
Nitrate, ~~N~~ NO_3	<2.0			
Nitrite, N				
Bromide				
Fluoride				

Quality Control Calculations

Ion Sum	193.96
Cation Sum	6.71
Anion Sum	1.78
Ion Balance	-36.79
% Ion Imbalance	58.11

<1.0

These values have been reviewed and are approved for transmission.

CONSOLENERGY
Research and Development
www.consolenergy.com
4000 Brownsville Rd.
South Park, PA 15129

ME WASH WATER TEST 5

Sample No.: ME WW 5
Date Received: 06/22/2005
Date Completed: 08/24/2005

Analytical No.: **20052658**
Project No.: 1621 -087 -000

Submitter: JAW/SCT/JEL

Parameter	Water Result (mg/L unless noted otherwise) Value	Value	Units	Avg Value
pH				
Acidity, $CaCO_3$				
Alkalinity, $CaCO_3$				
Hydroxide, $CaCO_3$				
Carbonate, $CaCO_3$				
Bicarbonate, $CaCO_3$				
Total Suspended Solids				
Total Dissolved Solids				
Specific Conductivity				
Hardness				
Turbidity				
Osmotic Pressure				
Dissolved Oxygen				
Ammonia, N	<10			
Total Elements				
Aluminum	<0.05			
Calcium	82.60			
Iron	0.07			
Magnesium	24.03			
Manganese	0.20			
Potassium	1.67			
Phosphorous				
Silicon	4.800			
Sodium	7.21			
Chromium	<0.05			
Anions:				
Sulfate	38.43			
Chloride	30			
Nitrate, N NO_3	<2.0			
Nitrite, N				
Bromide				
Fluoride				

Quality Control Calculations	
Ion Sum	184.21
Cation Sum	6.46
Anion Sum	1.65
Ion Balance	-36.49
% Ion Imbalance	59.40

<1.0

These values have been reviewed and are approved for transmission.

CONSOL ENERGY
Research and Development
www.consolenergy.com
4000 Brownsville Rd.
South Park, PA 15129

ME WASH WATER TEST 6

Sample No.: ME WW 6
Date Received: 06/22/2005
Date Completed: 08/24/2005

Analytical No.: **20052659**
Project No.: 1621 -087 -000

Submitter: JAW/SCT/JEL

Parameter	Water Result (mg/L unless noted otherwise) Value	Value	Units	Avg Value
pH				
Acidity, $CaCO_3$				
Alkalinity, $CaCO_3$				
Hydroxide, $CaCO_3$				
Carbonate, $CaCO_3$				
Bicarbonate, $CaCO_3$				
Total Suspended Solids				
Total Dissolved Solids				
Specific Conductivity				
Hardness				
Turbidity				
Osmotic Pressure				
Dissolved Oxygen				
Ammonia, N	<10			
Total Elements				
Aluminum	<0.05			
Calcium	70.21			
Iron	0.11			
Magnesium	23.86			
Manganese	0.06			
Potassium	1.82			
Phosphorous				
Silicon	4.821			
Sodium	7.16			
Chromium	<0.05			
Anions:				
Sulfate	38.52			
Chloride	35			
Nitrate, N sw NO_3	<2.0			
Nitrite, N				
Bromide				
Fluoride				

Quality Control Calculations

Ion Sum	176.74
Cation Sum	5.83
Anion Sum	1.79
Ion Balance	-30.10
% Ion Imbalance	53.03

<1.0

These values have been reviewed and are approved for transmission.