DOE/FE-0137

Circulate
File No.

Comprehensive Report to Congress Clean Coal Technology Program

Innovative Coke Oven Gas Cleaning System for Retrofit Applications

August 1989

U.S. Department of Energy
Assistant Secretary for Fossil Energy
Office of Clean Coal Technology

Comprehensive Report to Congress
Clean Coal Technology Program

Innovative Coke Oven Gas Cleaning System for Retrofit Applications

A Project Proposed By Bethlehem Steel Corporation

August 1989

U.S. Department of Energy
Assistant Secretary for Fossil Energy
Office of Clean Coal Technology
Washington, DC 20585

TABLE OF CONTENTS

		Page
1.0	EXECUTIVE SUMMARY	1
2.0	INTRODUCTION AND BACKGROUND	4
2.1	Requirement for Report to Congress	4
2.2	Evaluation and Selection Process	5
3.0	TECHNICAL FEATURES	8
3.1	Project Description	8
3.1.1	Project Summary	9
3.1.2	Project Sponsorship and Cost	9
3.2	Coke Oven Gas Desulfurization Process	10
3.2.1	Overview of Process Development	10
3.2.2	Process Description	11
3.2.3	Application of Process in Proposed Project	17
3.3	General Features of the Project	18
3.3.1	Evaluation of Developmental Risk	18
3.3.1.1	Similarity of Project to Other Demonstration and/or Commercial Efforts	19
3.3.1.2	Technical Feasibility	20
3.3.1.3	Resource Availability	20
3.3.2	Relationship Between Project Size and Projected Scale of Commercial Facility	21
3.3.3	Role of the Project in Achieving Commercial Feasibility of the Technology	21
3.3.3.1	Applicability of the Data to Be Generated	21
3.3.3.2	Identification of Features That Increase Potential for Commercialization	22
3.3.3.3	Comparative Merits of Project, and Projection of Future Commercial Economic and Market Acceptability	24
4.0	ENVIRONMENTAL CONSIDERATIONS	25
5.0	PROJECT MANAGEMENT	27
5.1	Overview of Management Organization	27
5.2	Identification of Respective Roles and Responsibilities	28
5.3	Project Implementation and Control Procedures	31
5.4	Key Agreements Impacting Data Rights, Patent Waivers, and Information Reporting	32
5.5	Procedures for Commercialization of Technology	33
6.0	PROJECT COST AND EVENT SCHEDULING	34
6.1	Project Base-Line Costs	34
6.2	Milestone Schedule	35
6.3	Repayment Plan	35

1.0 EXECUTIVE SUMMARY

In December 1987, Public Law No. 100-202, as amended by Public Law No. 100-446, provided $575 million to conduct cost-shared Innovative Clean Coal Technology (ICCT) projects to demonstrate emerging clean coal technologies that can be used to retrofit or repower existing facilities. To that end, a Program Opportunity Notice (PON) was issued by the Department of Energy (DOE) in February 1988 to solicit proposals to demonstrate technologies that were capable of being commercialized in the 1990's, that were more cost effective than current technologies, and that could achieve a significant reduction of sulfur dioxide and/or nitrogen oxides emissions from existing coal-burning facilities, particularly those that contribute to transboundary and interstate pollution.

In response to the PON No. DE-PS01-88FE61530, fifty-five proposals were received by the DOE in May 1988. After the proposals were evaluated, sixteen projects were selected for award. These projects involve advanced pollution control equipment that can be "retrofitted" to existing facilities, or "repowering" technologies that not only reduce air pollution but also increase generating-plant capacity and extend the operating life of the facility.

One of the sixteen projects selected for funding is a project proposed by Bethlehem Steel Corporation to demonstrate an innovative technology that removes sulfur-bearing compounds and ammonia from coke oven gas (COG) before it is used as a fuel in the steel mill. Approximately 80 percent of the sulfur and 98% of the ammonia is removed from the COG. This project will also reduce benzene and hydrogen cyanide emissions.

If successful, this project would demonstrate an innovative COG cleaning technology that provides a cost-effective alternative to other COG desulfurization technologies while also reducing the emission rates of several other pollutants. Traditional COG processing to remove ammonia results in the production of crude ammonium sulfate, a by-product that is very difficult to sell and that requires sulfuric acid to produce. The technology to be demonstrated destroys the ammonia, thus eliminating problems with disposal of an unmarketable by-product and problems with handling sulfuric acid.

The proposed technology is a first-time integration of four commercially available technologies. The four steps, or stages, in the proposed process are the following:

- Secondary Gas Cooling
- Hydrogen Sulfide and Ammonia Removal
- Hydrogen Sulfide and Ammonia Recovery
- Ammonia Destruction and Sulfur Recovery

The process uses contaminated water produced in the coke oven plant to absorb sulfur compounds and ammonia. Both the sulfur compounds and ammonia are steam stripped from the contaminated water, and then the ammonia is destroyed in a catalytic reactor. This reactor is followed by a conventional Claus Plant that catalytically converts the sulfur compounds to elemental sulfur, which is sold. Since each process unit has individually achieved commercial status, the technical risk for the project is significantly reduced.

The benefits of this process are the reduction of sulfur, ammonia, and organic compound emissions in the plant, and no production of a solid waste.

The demonstration project will be conducted at Bethlehem Steel Corporation's Sparrows Point Plant located in Baltimore County, Maryland (Figure 1). It is located about 10 miles southeast of downtown Baltimore on a peninsula extending into the Patapsco River. The Patapsco River estuary is also called the Baltimore Harbor. A fully integrated facility to cool the COG, remove and recover hydrogen sulfide and ammonia from the COG, destroy the ammonia, and recover by-product sulfur will be installed at the Coal Chemical Plant associated with Bethlehem Steel Corporation's Coke Plant. The demonstration facility will process the entire COG stream of 74 million standard cubic feet per day. The coke plant processes approximately 2 million tons of coal per year to produce 1.4 million tons of metallurgical coke. This is a slightly larger than average coke-making facility.

This project offers a number of benefits to various parties. It offers the DOE the opportunity to participate in a demonstration project that will be carried out at full scale in a commercial operating facility. It will demonstrate a technology that is applicable to all U.S. coke ovens. The Participant is a large U.S. industrial company and is the sole corporate sponsor, thus assuring participant funding. The Participant is offered the benefit of DOE involvement in meeting its environmental obligations in an economical manner. The State of Maryland and its citizens benefit from the long-term reduction in the emission of pollutants.

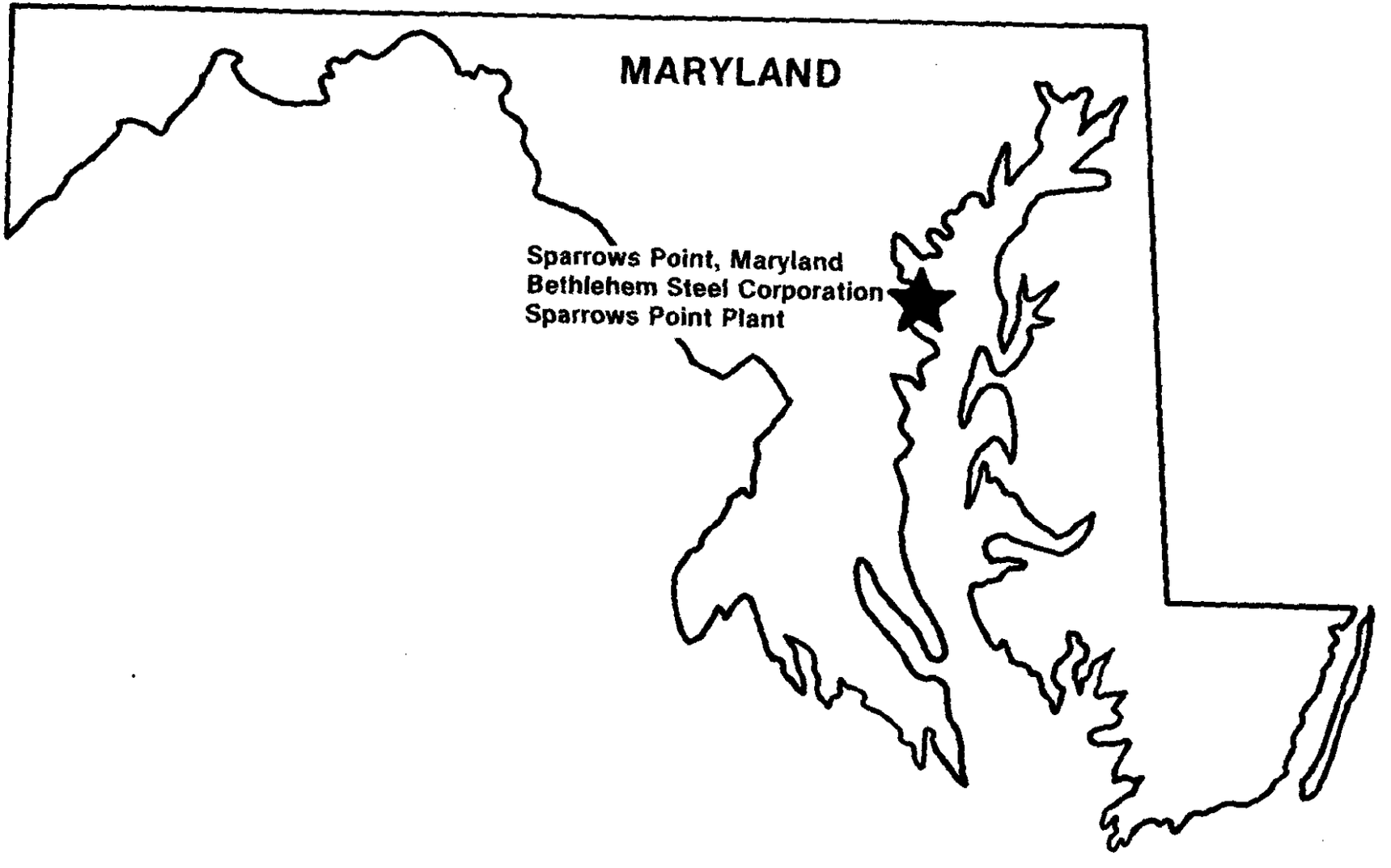

FIGURE 1. INNOVATIVE COKE OVEN GAS CLEANING SYSTEM FOR RETROFIT APPLICATIONS PROJECT SITE.

No 118 016

The project will be performed over a 49-month period. The total estimated cost is $45,239,781, of which $13,500,000 will be provided by DOE, and $31,739,781 will be provided by the Bethlehem Steel Corporation. Design and other engineering services will be carried out by Davy/Still-Otto as the prime subcontractor to Bethlehem Steel Corporation. Bethlehem Steel Corporation will retain the services of a general contractor for construction. The DOE and Bethlehem Steel Corporation are the only co-funders.

2.0 INTRODUCTION AND BACKGROUND

The domestic coal resources of the United States play an important role in meeting current and future energy needs. During the past 15 years, considerable effort has been directed to developing improved coal combustion, conversion, and utilization processes to provide efficient and economic energy options. These technology developments permit the use of coal in a cost-effective and environmentally acceptable manner.

2.1 Requirement for Report to Congress

In December 1987, Congress made funds available for the ICCT Program in Public Law No. 100-202, "An Act Making Appropriations for the Department of Interior and Related Agencies for the Fiscal Year Ending September 30, 1988, and for Other Purposes" (the "Act"). This Act provided funds for the purpose of conducting cost-shared clean coal technology projects to demonstrate emerging clean coal technologies that are capable of retrofitting or repowering existing facilities and authorized DOE to conduct the ICCT Program. Public Law No. 100-202, as amended by Public Law No. 100-446, provided $575 million, which will remain available until expended, and of which (1) $50,000,000 was available for the fiscal year beginning October 1, 1987; (2) an additional $190,000,000 was available for the fiscal year beginning October 1, 1988; (3) an additional $135,000,000 will be available for the fiscal year beginning October 1, 1989; and (4) $200,000,000 will be available for the fiscal year beginning October 1, 1990. Of this amount, $6,782,000 will be set aside for the Small Business and Innovative Research Program, and is unavailable to the ICCT Program.

In addition, after the projects to be funded had been selected, DOE prepared a comprehensive report on the proposals received. The report was submitted in October 1988 and was entitled "Comprehensive Report to Congress: Proposals Received in Response to the Innovative Clean Coal Technology Program Opportunity

Notice" (DOE/FE-0114). Specifically, the report outlines the solicitation process implemented by DOE for receiving proposals for ICCT projects, summarizes the project proposals that were received, provides information on the technologies that are the focus of the ICCT Program, and reviews specific issues and topics related to the solicitation.

Public Law No. 100-202 directed DOE to prepare a full and comprehensive report to Congress on each project selected for award under the ICCT Program. This report is in fulfillment of this directive and contains a comprehensive description of the "Innovative Coke Oven Gas Cleaning System for Retrofit Applications" Demonstration Project.

2.2 Evaluation and Selection Process

A PON was issued by DOE on February 22, 1988, to solicit proposals for conducting cost-shared ICCT demonstrations. Fifty-five proposals were received. All proposals were required to meet the six qualification criteria provided in the PON. Failure to satisfy one or more of these criteria resulted in rejection of the proposal. Proposals that passed Qualification Review proceeded to Preliminary Evaluation. Three preliminary evaluation requirements were identified in the PON. Proposals were evaluated to determine whether they met these requirements; those proposals that did not were rejected.

Of those proposals remaining in the competition, each offeror's Technical Proposal, Business and Management Proposal, and Cost Proposal were evaluated. The PON provided that the Technical Proposal was of somewhat greater importance than the Business and Management Proposal and that the Cost Proposal was of minimal importance; however, everything else being equal, the Cost Proposal was very important.

The Technical Evaluation Criteria were divided into two major categories. The first, "Commercialization Factors," addressed the projected commercialization of the proposed technology. This was different from the proposed demonstration project itself and dealt with factors involved in the commercialization process. The criteria in this section provided for consideration of (1) the potential of the technology to reduce total national emissions of sulfur dioxide and/or nitrogen oxides and to reduce transboundary and interstate air pollution with minimal adverse environmental, health, safety, and socioeconomic (EHSS) impacts; and (2) the potential of the proposed technology to improve the cost-effectiveness of controlling emissions of sulfur dioxide and nitrogen oxides when compared to commercially available technology options.

The second major category, "Demonstration Project Factors," recognized that the proposed demonstration project represents the critical step between "predemonstration" scale of operation and commercial readiness, and dealt with the proposed project itself. Criteria in this category provided for consideration of the following: the technical readiness for scale-up; the adequacy and appropriateness of the demonstration project; the EHSS and other site-related aspects; the reasonableness and adequacy of the technical approach; and the quality and completeness of the Statement of Work.

The Business and Management Proposal was evaluated to determine the business and management performance potential of the offeror, and was used as an aid in determining the offeror's understanding of the technical requirements of the PON. The Cost Proposal was reviewed and evaluated to assess the validity of the proposer's approach to completing the project in accordance with the proposed Statement of Work and the requirements of the PON.

Consideration was also given to the following program policy factors:

1. The desirability of selecting projects for retrofitting and/or repowering existing coal-fired facilities that collectively represent a diversity of methods, technical approaches, and applications (including both industrial and utility).

2. The desirability of selecting projects that collectively produce some near-term reduction of transboundary transport of emitted sulfur dioxide and nitrogen oxides.

3. The desirability of selecting projects that collectively represent an economic approach applicable to a combination of existing facilities that significantly contribute to transboundary and interstate transport of sulfur dioxide and nitrogen oxides in terms of facility types and sizes, and coal types.

The PON also provided that, in the selection process, DOE would consider giving preference to projects located in states where the rate-making bodies of those states treat innovative clean coal technologies the same as pollution control projects or technologies. The inclusion of this project selection consideration was intended to encourage states to utilize their authorities to promote the adoption of innovative clean coal technology projects as a means of improving the management of air quality within their areas and across broader geographical areas.

The PON provided that this consideration would be used as a tie breaker if, after application of the evaluation criteria and the program policy factors, two projects received identical evaluation scores and remained essentially equal in value. This consideration would not be applied if, in doing so, the regional geographic distribution of the projects selected would be altered significantly.

An overall strategy for compliance with the National Environmental Policy Act (NEPA) was developed for the ICCT Program, consistent with the Council on Environmental Quality NEPA regulations and the DOE guidelines for compliance with NEPA. This strategy includes both programmatic and project-specific environmental impact considerations during and after the selection process.

In light of the tight schedule imposed by Public Law No. 100-202 and the confidentiality requirements of the competitive PON process, DOE established alternative procedures to ensure that environmental factors were fully evaluated and integrated into the decision-making process to satisfy its NEPA responsibilities. Offerors were required to submit both programmatic and project-specific environmental data and analyses as a discrete part of their proposal.

The DOE strategy for NEPA compliance has three major elements. The first involves preparation of a comparative programmatic environmental impact analysis, based on information provided by the offerors and supplemented by DOE, as necessary. This environmental analysis ensures that relevant environmental consequences of the ICCT Program and reasonable programmatic alternatives are evaluated in the selection process. The second element involves preparation of a preselection project-specific environmental review. The third element provides for preparation by DOE of publicly available site-specific NEPA documents for each project selected for financial assistance under the PON.

No funds from the ICCT Program will be provided for detailed design, construction, operation, and/or dismantlement until the third element of the NEPA process has been successfully completed. In addition, each Cooperative Agreement entered into will require an Environmental Monitoring Plan (EMP) to ensure that significant technology, project, and site-specific environmental data are collected and disseminated.

After considering the evaluation criteria, the program policy factors, and the NEPA strategy, sixteen proposals were selected for award. The proposal submitted by Bethlehem Steel Corporation was one of these proposals.

3.0 TECHNICAL FEATURES

3.1 Project Description

The Bethlehem Steel Corporation project will demonstrate the feasibility of integrating four separate process stages in the cleaning of coke oven gas. Each separate stage has been proven and several commercial-sized installations of each process stage are presently being operated. This project will be the first demonstration integrating all four of these technologies in a retrofit application.

This project will take place at Bethlehem Steels Corporation's Sparrows Point Plant in Baltimore, Maryland, and will service a coke plant rated at a nominal production of 1,400,000 tons per year of metallurgical coke.

The four separate process stages to be integrated into the retrofit demonstration are the following:

- Secondary Gas Cooling
- Hydrogen Sulfide and Ammonia Removal
- Hydrogen Sulfide and Ammonia Recovery
- Ammonia Destruction and Sulfur Recovery

This project is intended to reduce by more than 60% the current emission of sulfur dioxide at Sparrows Point, Maryland, from the combustion of COG. This reduction of sulfur dioxide emissions will be accomplished through the removal of hydrogen sulfide from the COG prior to its combustion. At present, only a portion of the COG is desulfurized with the current technology. The process to be demonstrated will remove 80% of the hydrogen sulfide from all of the COG produced. More than 98% of the ammonia will also be removed and destroyed. Changes proposed in the gas-processing system as part of this project will also result in reductions in the quantities of benzene and other volatile hydrocarbons emitted to the atmosphere.

3.1.1 Project Summary

Project Title:	Innovative Coke Oven Gas Cleaning System for Retrofit Applications
Proposer:	Bethlehem Steel Corporation
Project Location:	Sparrows Point, Maryland, Baltimore County
Technology:	Coke Oven Gas Cleaning with Integrated Gas Cooling, Ammonia and Hydrogen Sulfide Removal and Recovery, Ammonia Destruction, and Sulfur Recovery
Application:	Retrofit to Coke Oven By-Product Plants
Types of Coal Used:	Pittsburgh No. 8 and Lower Kittanning or Equivalent
Product:	Clean COG and Sulfur
Project Size:	5687 Tons Per Day Coal Feed to Coke Plant (74,000,000 Standard Cubic Feet/Day of COG)
Project Start Date:	April 1, 1989
Project End Date:	April 30, 1993

3.1.2 Project Sponsorship and Cost

Project Sponsor:	Bethlehem Steel Corporation
Co-Funders:	U.S. Department of Energy
Estimated Project Cost:	$45,239,781

Project Cost Distribution:

Participant Share(%)	DOE Share(%)
70.2	29.8

3.2 Coke Oven Gas Desulfurization Process

3.2.1 Overview of Process Development

This project consists of the integration of four separately developed processes. Specifically these are the following:

- Secondary Gas Cooling
- Hydrogen Sulfide and Ammonia Removal
- Hydrogen Sulfide and Ammonia Recovery
- Ammonia Destruction and Sulfur Recovery

The development of each one will be discussed separately prior to considering the proposed integration of these technologies.

Secondary Gas Cooling - This degree of cooling is commonly used in Europe, where standard operating practices produce lower gas temperatures at the inlet of the gas-processing equipment. The first coolers of the type used in this project were installed in the United States more than ten years ago in steelmaking facilities.

Hydrogen Sulfide and Ammonia Removal - This process was developed by Firma Carl Still specifically for the purpose of treating COG. Since the early 1950's, more than 40 of these plants have been built by Davy/Still-Otto and associated companies. The process was developed to allow removal of hydrogen sulfide from the COG using, as reagents, chemicals that are part of the process streams produced in normal coke plant operations. Early installations were tied to sulfuric acid production facilities, but more recent installations have produced elemental sulfur. In either case, the process that removes the ammonia and hydrogen sulfide from the COG is the same.

Hydrogen Sulfide and Ammonia Recovery - This process, also developed by Firma Carl Still, consists of first removing the ammonia and hydrogen sulfide from the absorbing solution by contacting it with steam, and then recovering the ammonia and hydrogen sulfide gases by condensing the steam.

Ammonia Destruction and Sulfur Recovery - The basis for this part of the overall process is the Claus Plant, in which hydrogen sulfide and sulfur dioxide are catalytically reacted to produce elemental sulfur and water vapor. Many Claus Plants are in existence. Claus Plants produce sulfur from gas streams that are rich in hydrogen sulfide. The basic Claus Plant design was modified by Firma Carl Still to destroy the ammonia via catalytic decomposition in the first stage of the process. Subsequently, up to 96.5% of the sulfur present in the feed gas is recovered in the remaining stages of the Claus Plant. Modified Claus Plants of this type have been operating in Germany for over 20 years and in the United States since the late 1970's.

Other Combined Processes - Various combinations of the above process steps have been in commercial operation since the late 1960's. In 1982, an installation at a coke plant in Sweden integrated all processes proposed for this project except for Secondary Gas Cooling. The capacity of this Swedish coke plant, operated with European coal, is about two-thirds that of the Sparrows Point Plant.

In summary, the overall process proposed for this project consists of four individual process steps that are commercially proven. This project is intended to be the first commercial demonstration integrating these four proven process steps.

3.2.2 Process Description

A simplified block flow diagram for the process is shown in Figure 2. The schematic process flow diagram for the retrofit COG-cleaning system at the Sparrows Point Plant is shown in Figures 3 and 4.

The COG entering the new cleaning system has been cooled by contact with flushing liquor in the existing piping that carries the gas from the coke ovens. Flushing liquor is obtained as a condensate from cooling the COG and contains water, tars, and oils. It also contains a number of dissolved salts and gases. Tars and oils are separated and sold as by-products. Of the remaining material, which is mostly water with some tar and oil, a small portion is used as a makeup to the secondary cooler. Excess flushing liquor is treated in a waste water treatment facility.

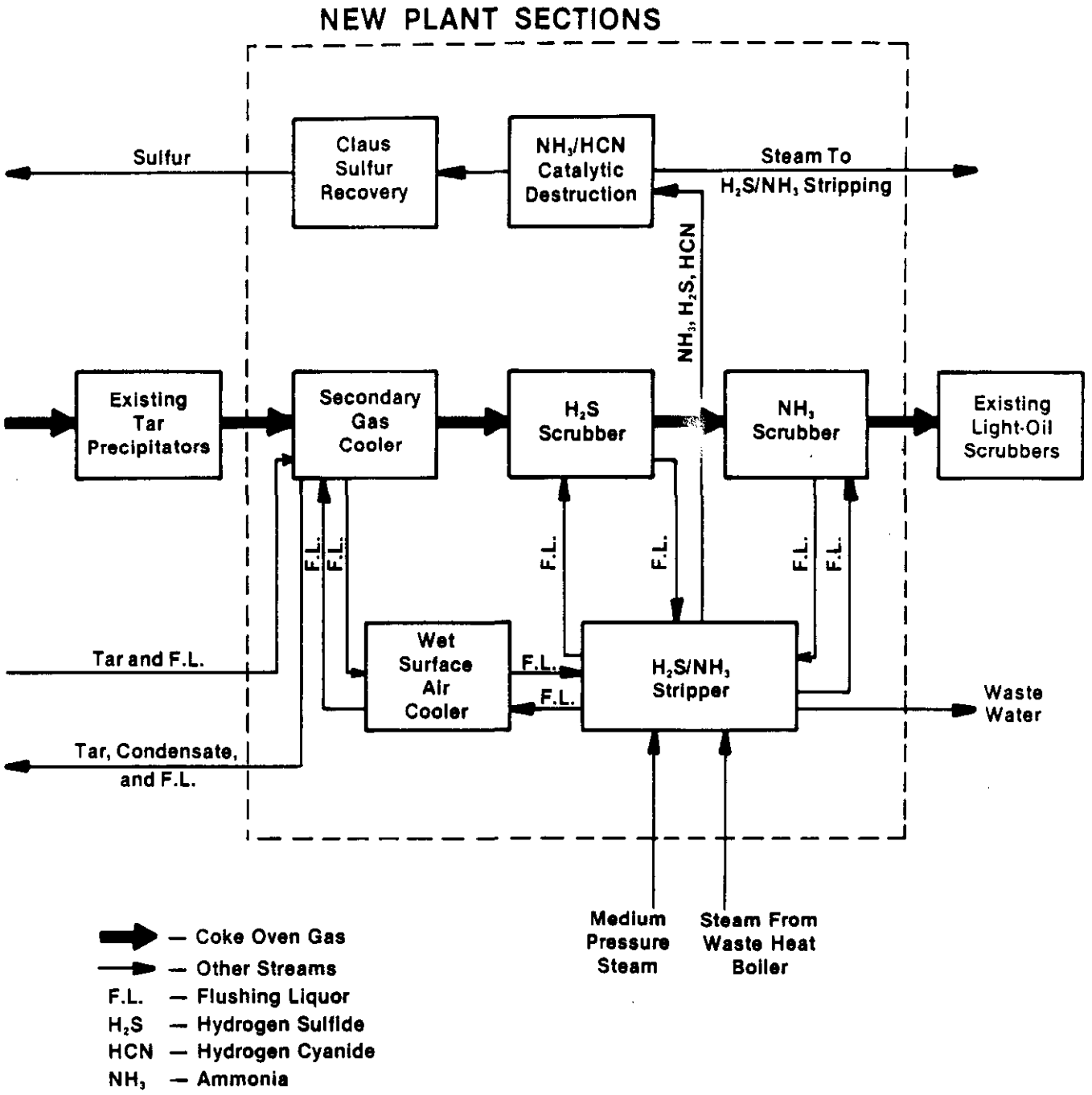

FIGURE 2. SIMPLIFIED BLOCK FLOW DIAGRAM OF THE INNOVATIVE COKE OVEN GAS CLEANING SYSTEM.

NO./18,164

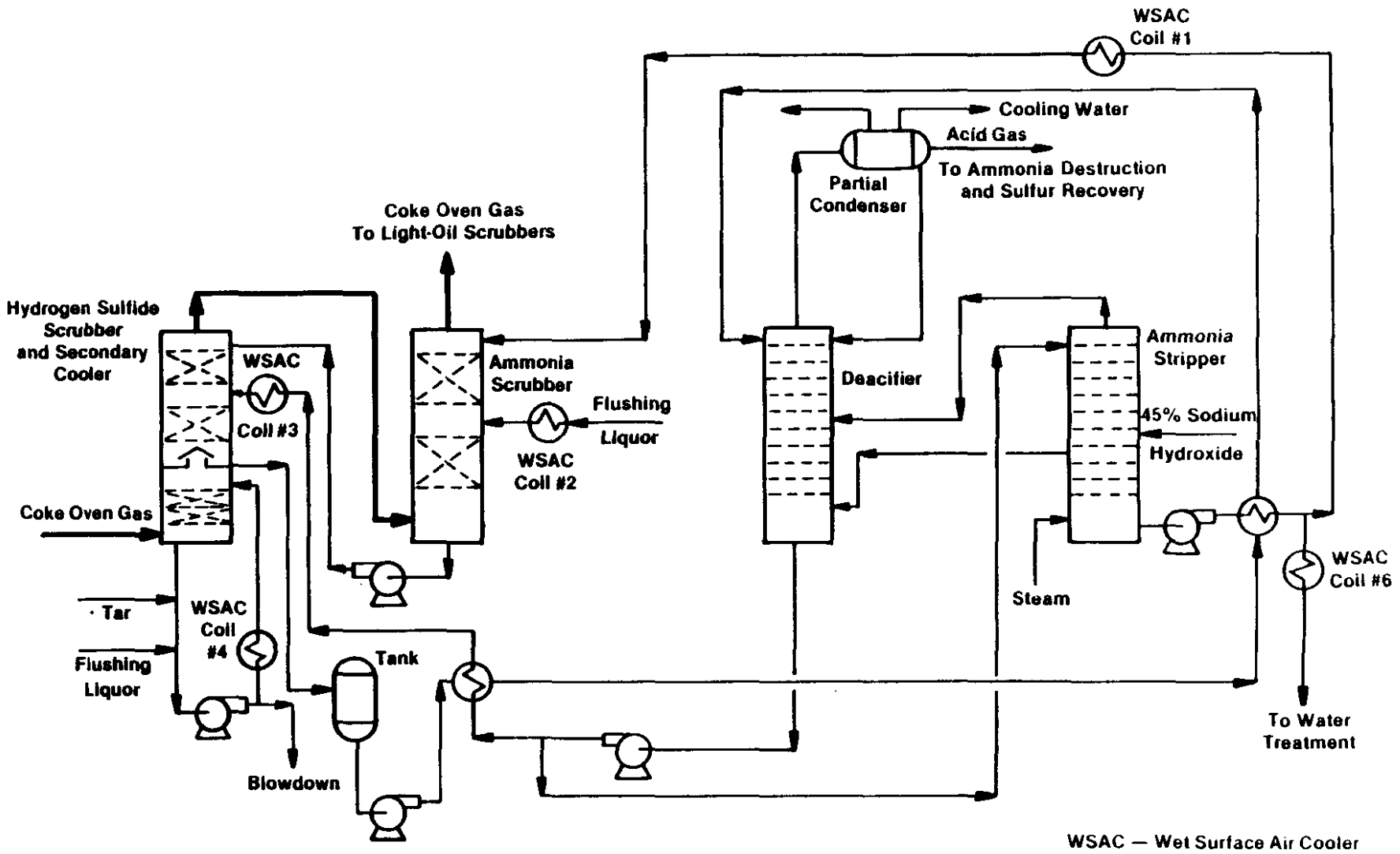

FIGURE 3. AMMONIA/HYDROGEN SULFIDE REMOVAL AND FLUSHING LIQUOR REGENERATION.

No 718 018

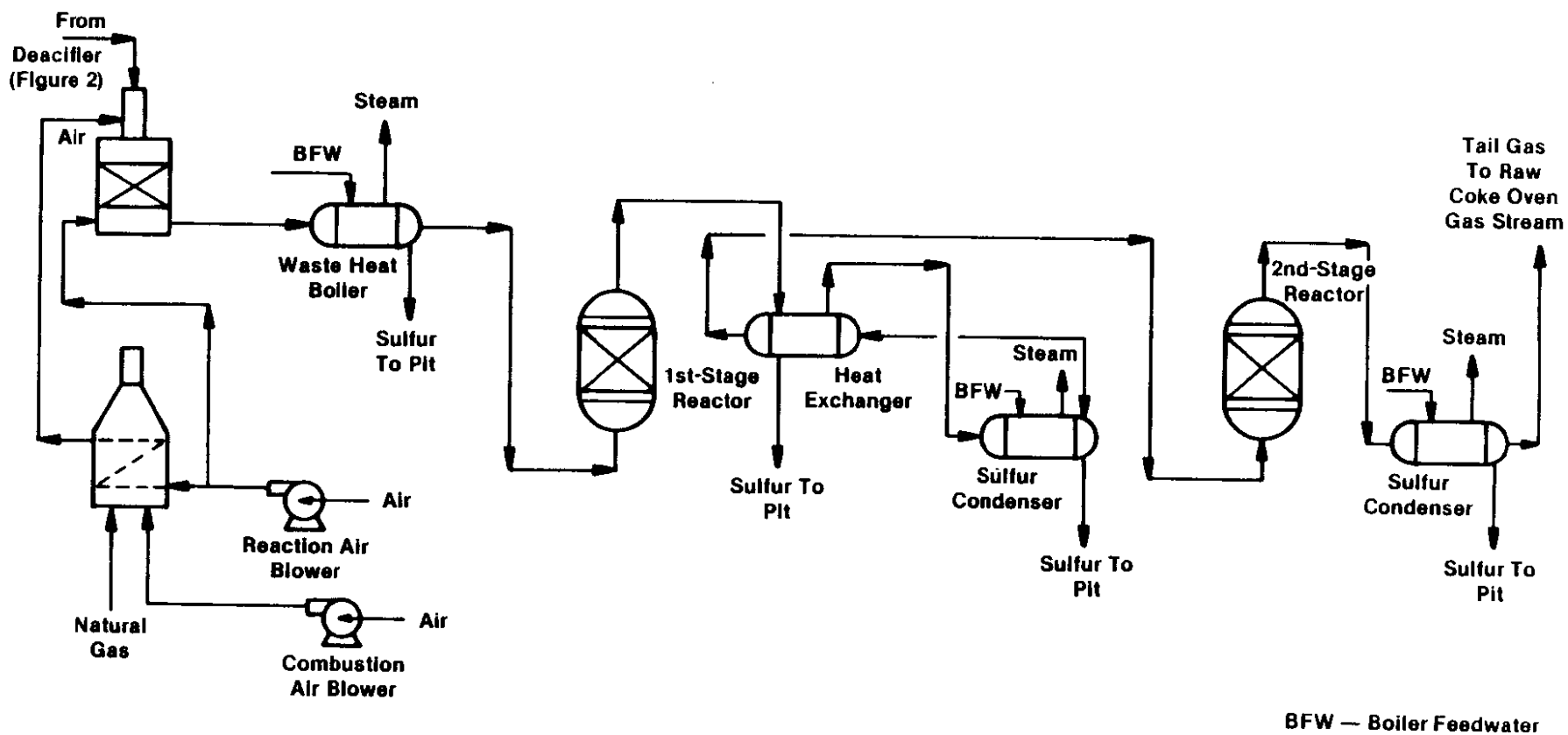

FIGURE 4. AMMONIA DESTRUCTION AND SULFUR RECOVERY.

No./18,017

The COG that has been cooled in the existing primary coolers is passed through the existing exhausters (blowers) to increase gas pressure and then passed to the existing electrostatic precipitators to remove tar mist. The COG, which is then relatively free of tar mist, enters the new system.

The COG enters the new system (proposed addition to be cost-shared by DOE) at the secondary cooler. The secondary cooler is a vessel that contains expanded metal packing to provide a large surface area. The gas passes upward through the packing and comes in contact with cool flushing liquor, which reduces the temperature of the gas. A small quantity of tar is added to the flushing liquor to dissolve any naphthalene that condenses from the gas. The warm flushing liquor is pumped through a coil of the wet surface air cooler (WSAC), where it is cooled and returned to the top of the secondary cooler. The WSAC consists of a series of tube bundles through which the warm flushing liquor flows. This prevents any contact between the atmosphere and flushing liquor. The tube bundles are externally cooled by blowing air and a water spray. The combination of air and wetting provides efficient evaporative cooling. In conventional systems, the flushing liquor is cooled in a cooling tower by direct contact with air. This results in the release of pollutants to the atmosphere. Some of the materials dissolved in the flushing liquor that may be released to the environment in conventional systems include benzene -- a carcinogen -- as well as ammonia, hydrogen sulfide, and hydrogen cyanide. Tar and fresh flushing liquor are continuously added to and removed from this circuit to prevent excessive salt buildup in the tar or flushing liquor.

The cooled COG leaving the secondary cooler section enters the hydrogen sulfide scrubber section, which also contains an expanded-metal packing to provide excellent contact between the gas and the flushing liquor. As in the secondary cooler, the gas flows upward and is contacted by a liquid flowing downward. The hydrogen sulfide is removed by absorption in the ammonia-rich flushing liquor stream. The ammonia-rich flushing liquor stream is recycled back from the deacifier and the ammonia scrubber.

The gas exiting the top of the hydrogen sulfide scrubber enters the base of the ammonia scrubber, which also contains expanded-metal packing designed to promote good contact between the liquid and gas. The liquid that flows downward is the clean flushing liquor that exits the bottom of the ammonia stripper essentially free of ammonia and hydrogen sulfide. The ammonia is removed from the gas, and the clean gas returns to the existing facilities for further processing.

The flushing liquor leaving the base of the ammonia scrubber, rich in ammonia, is pumped to the hydrogen sulfide scrubber, where it absorbs the hydrogen sulfide as described previously. The flushing liquor, rich in hydrogen sulfide and ammonia, leaving the base of the hydrogen sulfide scrubber section flows to the surge tank. After being pumped from the surge tank, it is heated and transferred to the top of the deacifier.

In the deacifier, a trayed column, the flushing liquor is countercurrently contacted with steam and ammonia vapors from the ammonia stripper to strip the acid gases (hydrogen sulfide, carbon dioxide, hydrogen cyanide), along with some dissolved ammonia, from the flushing liquor. These gases are sent to the catalytic destruction unit, where undesirable gases, such as ammonia and hydrogen cyanide, are destroyed. From the catalytic destruction unit, the gas is passed to sulfur recovery facilities that will be described later. The flushing liquor leaving the base of the deacifier is split into two streams. One stream is cooled and returned to the hydrogen sulfide scrubber section, where it is used to absorb the hydrogen sulfide. The other flushing liquor stream goes to the ammonia stripper, which is also a trayed column, for ammonia removal. The ammonia-rich liquor is countercurrently contacted with steam in the ammonia stripper to remove the dissolved ammonia. Sodium hydroxide is added in the middle of the column to release the ammonia that is chemically bound as fixed salts. The ammonia vapors from the ammonia stripper are sent to the deacifier, which maximizes the concentration of the ammonia in the deacifier bottoms. The ammonia stripper bottoms may be split into two streams, both of which are cooled in separate WSAC coils. One stream may be recycled to the ammonia scrubber to absorb ammonia and, ultimately, hydrogen sulfide. The other stream, which is essentially the excess clean flushing liquor within the system, is removed from the gas-cleaning facility and sent to the existing waste water treatment facility.

The gases that were stripped from the flushing liquor in the deacifier contain mainly hydrogen cyanide, hydrogen sulfide, and ammonia. These gases are first combusted with heated air to raise the temperature to that required by the catalytic reactor downstream. The amount of air is controlled so that no oxygen remains in the heated gas passed through the catalytic decomposition reactor that destroys the ammonia and hydrogen cyanide. Sufficient additional air is added at the exit of the catalytic reactor to oxidize approximately one-third of the hydrogen sulfide to sulfur dioxide. The hot gases are cooled in the waste heat boiler prior to entering to the Claus reactors. The hydrogen sulfide and

sulfur dioxide in the exiting gases react to form elemental sulfur and water vapor.

The waste heat boiler is used to condense the sulfur product and generate steam for use elsewhere in the gas-cleaning facility.

The remaining gas containing the unreacted hydrogen sulfide and sulfur dioxide then enters the first Claus reactor, where a catalyst promotes further reaction. The product gases pass through the tube side of a gas-to-gas heat exchanger, where they are cooled and sent into a sulfur condenser for additional cooling and sulfur recovery. The relatively cool gas exiting the sulfur condenser passes through the shell side of the gas-to-gas heat exchanger to be reheated to reaction temperature. The heated gas then enters the second Claus reactor, where additional hydrogen sulfide is oxidized to sulfur dioxide. At this point, about 96% of the hydrogen sulfide and sulfur dioxide have been reacted. The gas exiting the second-stage Claus reactor is again cooled in a sulfur condenser to recover sulfur. The remaining tail gas is returned as a recycle to the COG entering the new system, where its remaining heating value can be used and residual hydrogen sulfide removed.

In summary, this process removes most of the sulfur, ammonia, and other pollutants in the COG, using, as reagents, materials contained in the COG. The bulk of ammonia and hydrogen cyanide present in the gas is destroyed. Using the new secondary cooler prevents the release of benzene, other volatile hydrocarbons, and traces of hydrogen cyanide, ammonia, and hydrogen sulfide to the atmosphere.

3.2.3 Application of Process in Proposed Project

This demonstration project is intended to satisfy the terms of an Administrative Consent Order between Bethlehem Steel Corporation and the State of Maryland, Department of the Environment. This Consent Order requires Bethlehem to desulfurize all COG at its Sparrows Point Plant near Baltimore, Maryland.

The coke-making facility at Sparrows Point consists of three batteries of ovens. Currently, Battery A has its own by-product processing facilities, and Batteries 11 and 12 (Plant B) have common processing facilities. These two COG streams will continue to be processed separately through primary cooling, compression, and tar mist removal.

The integrated process described in the previous section of this report will be used in a retrofit application to treat the combined COG stream from Batteries A and 11 and 12. The demonstration project will utilize the new COG cleaning system to remove and destroy ammonia and hydrogen cyanide and to remove hydrogen sulfide and recover a salable sulfur product from the COG. The existing COG cleaning facilities are not as efficient as the demonstration project and produce ammonium sulfate solid waste.

The demonstration project will confirm the ability of the four process steps to operate effectively and reliably when integrated together.

This project will demonstrate the technology's ability to reduce the sulfur content of the COG from 340 grains per 100 standard cubic feet (scf) to as low as 70 grains per/100 scf and the ammonia content from 300 to 4 grains per 100 scf. In addition, emissions of benzene and hydrogen cyanide will be greatly reduced, the ammonium sulfate solid waste will be eliminated, and a salable sulfur by-product will be produced.

3.3 General Features of the Project

3.3.1 Evaluation of Developmental Risk

Like all first-of-a-kind demonstrations, the process to be used in this project has some associated risk. However, as described previously, all four process steps have been individually proven in multiple commercial installations. In addition, combinations of two and three of the four process steps have been proven in commercial plants.

Review of the data base for the proposed demonstration has resulted in the determination that the project represents a low technical risk approach to satisfying environmental and economic goals. As mentioned previously, all four process steps are commercially proven on an individual basis and in combination with one or two of the other process steps. In addition, the engineering firm for the demonstration project was responsible for the design and construction of these commercial installations. The demonstration plant design is such that the system can be adjusted to handle any likely changes in gas flow and analysis while meeting performance requirements. The equipment design, construction, and operation will be managed by Bethlehem Steel Corporation personnel who are well experienced in operating COG by-product processing equipment and in conducting construction projects at the site. This combination of commercial design

experience with the individual process steps and with the experience of the operators minimizes construction, start-up, and operating risks for this project.

3.3.1.1 Similarity of the Project to Other Demonstration and/or Commercial Efforts

A number of processes desulfurize COG. All currently available processes use a liquid to selectively absorb the hydrogen sulfide from the COG. One group of these processes then uses a stripping operation to remove the hydrogen sulfide from the absorbing solution, with the hydrogen sulfide being further processed to produce by-product sulfur or sulfuric acid. The other group oxidizes the dissolved hydrogen sulfide in the absorbing solution and separates the solid elemental sulfur from the absorbing solution. These processes, when used to treat COG, typically have problems with sulfur quality because of contamination from traces of tar and oil in the COG and from trace elements (vanadium, arsenic) from the scrubbing solution.

A number of processes remove the hydrogen sulfide from the absorbing solution and recover either elemental sulfur or sulfuric acid. A Claus Plant, similar to the one proposed for this project, is normally used to produce elemental sulfur. Claus Plant sulfur is usually high quality. Some of the absorption and desorption types of processes that are commercially available use an absorbing solution based on sodium or potassium carbonate or on an amine or similar organic compound. The effectiveness, cost, and reliability of these processes vary somewhat. Many, especially the amine-based processes, are subject to solution degradation by impurities in the COG. This is also true of the liquid oxidation processes.

Both the liquid oxidation processes and the processes using absorption and desorption, excluding the proposed process, require that reagents present in the scrubbing liquid be purchased. Often, additional liquid or solid wastes, some of which contain organic sludges and/or heavy metals, are produced. Except for the purchase of very small amounts of caustic to free ammonia from the ammonium salts, all chemicals needed for the proposed demonstration are produced in the coke-making process. The only additional waste is a small amount of boiler feedwater blowdown.

3.3.1.2 Technical Feasibility

All four process stages being integrated for this project have operated successfully on a commercial scale. Different combinations of two process stages have been used in commercial applications. One successful operation uses three of the process stages, namely Hydrogen Sulfide and Ammonia Removal, Hydrogen Sulfide and Ammonia Recovery, Ammonia Destruction, and Sulfur Recovery. The fourth process stage, Secondary Gas Cooling, has been demonstrated in two commercial applications. All these commercial installations are being used to treat COG successfully. Therefore, the project is considered to have a strong data base supporting the technical feasibility.

3.3.1.3 Resource Availability

Because of its location in the Baltimore metropolitan area, the Sparrows Point Plant has access to a large urban work force with the skill necessary to construct and operate the proposed facility. The proposed project is located within an existing large steel plant employing many thousands of people. The plant has good access to the surrounding area by both land and water modes. The plant has its own docking facilities to accommodate deep-draft vessels and barges. Rail service is by Bethlehem Steel Corporation's own railroad, which interconnects to the Chessie System, the Penn Central, and the Western Maryland Railway. Access by major highways is comparatively good for a peninsula. This is largely due to the completion of the Patapsco freeway -- a four-lane divided highway connecting Sparrows Point directly to the Baltimore Beltway. Access has been further improved by the completion of the new Outer Harbor Bridge between Hawkins Point and Sollers Point.

The Sparrows Point Plant coal requirements will not change in either quantity or quality on account of the proposed project. The coal utilized in the coking process is a combination of low- and high-volatility coking coals from Bethlehem Steel Corporation's own mines in Pennsylvania, West Virginia, and Kentucky. This coal is sometimes supplemented with purchased domestic coal.

The Bethlehem Steel Corporation has coal reserves sufficient for decades and has the ability to mine and deliver sufficient quantities of coal to the Sparrows Point Plant to maintain maximum coke production. In general, coal is shipped from the mines to the Baltimore area by rail. The coal is then loaded onto barges for delivery to the coal storage area at Sparrows Point.

The Sparrows Point Plant has three water systems. Potable water is obtained from Baltimore; industrial water is supplied from the treated effluent of the City of Baltimore's Back River Sewage Treatment Plant; and saltwater from the bay is used for emergencies and some non-contact cooling. All water and water treatment chemicals are available in sufficient quantities to serve the proposed project.

The reagents required for this process are obtained in the quantities needed from the coke-making and gas-treating operations. The only exception is the caustic used in the ammonia stripper to free the chemically bound ammonia in the fixed salts. This stripper is a very small quantity of a widely used industrial chemical, and its use will have no discernible effect on caustic supplies.

3.3.2 Relationship Between Project Size and Projected Scale of Commercial Plant

The technology proposed for this project will be designed to treat 74 million standard cubic feet per day of COG. This is a typical commercial facility. Most coke plants are smaller, but a few are significantly larger. Therefore, all equipment will be demonstrated at a size or capacity near the upper limit of the range required to retrofit COG-treating facilities.

3.3.3 Role of the Project in Achieving Commercial Feasibility of the Technology

This project will demonstrate the integrated operation of the four process steps in a retrofit application in a commercial COG-treating facility. The ability of these four process steps operated in a coordinated fashion to attain design levels of hydrogen sulfide and ammonia removal will be demonstrated. The successful demonstration of the integrated process in this commercial COG-processing facility will prove its suitability for retrofit to other COG-treating plants.

3.3.3.1 Applicability of the Data to Be Generated

When the new facility is operational, the hydrogen sulfide levels will be monitored routinely in the COG entering and exiting the demonstration facility. Ammonia levels will also be similarly monitored. In addition, sufficient analyses will be carried out to determine what, if any, effect the desulfurization facility has on the total composition of the COG. Stack sampling

will be performed on facilities that burn the cleaned COG to determine the impact that the new COG cleaning facility has on emissions from these sources.

In addition to the performance monitoring, detailed operating data and data on utility consumption will be collected. This information will provide the economic data necessary to fully evaluate the merits of the new cleaning facility.

To facilitate the collection of plant data, a distributed control system will be provided with the new facility. This system will provide comprehensive control, monitoring, and recording of the process operations; trend presentation; and data logging. Environmental performance data, such as the hydrogen sulfide and ammonia concentrations of the gas entering and exiting the facility, will be monitored on a regular basis, in addition to the flow rate and composition of all effluent streams. Detailed performance data, utility requirements, and operating cost information will be developed to support the commercialization of the technology.

Since the new facility will be installed in a fairly typical existing commercial COG by-product facility, the cost and performance data will be directly applicable to other COG by-product plants. Therefore, the cost and performance data generated by this project are expected to aid in the commercialization of this technology in the United States and abroad.

3.3.3.2 Identification of Features That Increase Potential for Commercialization

The use of this new approach to COG cleanup will demonstrate the ability to modernize a COG by-product system by retrofitting facilities that combine desulfurization and sulfur recovery with ammonia removal and destruction. The demonstration facility will be designed for a plant life exceeding 20 years to provide operational reliability beyond the year 2000 and will comply with all environmental regulations.

This new method to treat and clean up COG will be the first United States use of this design and will demonstrate its application to the metallurgical coke industry. This design offers several advantages over existing cleanup and treatment facilities:

- First system in the United States to combine desulfurization and sulfur recovery with ammonia removal and destruction for coke oven gas processing.

- Operating flexibility and reliability.

- Reduced manpower and chemical requirements when compared to the conventional systems.

- Use of reagents indigenous to coke oven facilities.

- Reduced by-product and waste disposal requirements for disposal of nuisance by-products.

- Reduced benzene and other organic emissions.

- Sulfur dioxide emissions from the combustion of the COG reduced by at least 80% to as low as 0.27 lb/MMBtu (equivalent to hydrogen sulfide concentrations in the COG as low as 55 grains/100 scf).

- No solid wastes.

Since by-product gas-processing arrangements at the demonstration site are very similar to those of other coal chemical facilities, the retrofitting of this technology should have wide industry application. Utilization of the demonstration process could reduce the overall cost of desulfurization, overcome existing environmental problems, and ensure reliable hydrogen sulfide removal. A preliminary cost comparison of combined operating and capital cost has shown that retrofitting Sparrows Point with the demonstration project is more cost effective than expanding the usage of the current desulfurization technology or selecting a different process.

The combination of cost, performance, and ease of retrofit is expected to lead to increased commercial use of the integrated process to reduce sulfur dioxide emissions from the combustion of COG.

3.3.3.3 Comparative Merits of Project and Projection of Future Commercial Economics and Market Acceptability

This project, when completed, will demonstrate that the technology, consisting of four integrated process steps, is both economically and technically attractive. In doing so, it will prove that this process is available for retrofit application in COG processing plants for the control of the acid rain precursor - sulfur dioxide.

Specifically, the technical objectives and benefits of this project will demonstrate the following:

- o Simultaneous hydrogen sulfide and ammonia removal from COG, hydrogen sulfide and ammonia recovery, ammonia destruction, and sulfur recovery resulting in a cleaner fuel gas for plant usage. Employment of this technology will substantially reduce
  - Sulfur dioxide emissions when the fuel gas is burned
  - Volatile organic compound emissions
  - Ammonia discharge to waste water treatment
- o Use of reagents indigenous in COG for hydrogen sulfide removal resulting in reduced costs for
  - Purchase and/or handling of feed reagents
  - Handling and/or treatment of by-products
  - Utilities
  - Manpower
- o Retrofit to an existing facility without significant downtime
- o Operational reliability beyond the year 2000, and compliance with all environmental regulations

The experience of the Participant and the prime subcontractor represents a positive factor in ensuring the success of the project. Bethlehem Steel Corporation has been operating coke-making and COG treatment facilities for many years. Davy/Still-Otto and associated companies have been active in the design

and construction of coke-making and COG treatment facilities for many years. Both have committed highly experienced personnel to the project.

The design for the demonstration project is based on operating data that have been collected from individual process steps or combinations of individual process steps that have been successfully operated at commercial size facilities. Because the demonstration facility will be designed to handle 74 million scf of COG per day, the demonstration project will be of a commercial size that is retrofitted into an above-average-sized coke-making facility. For this reason, essentially no scale-up is involved.

Demonstration of this COG cleanup technology is critical to commercialization. The demonstration facility will be the first integration of the four commercially available process steps anywhere in the world. Since the existing COG treatment facility at the demonstration site is very similar to other COG treatment facilities, the retrofitting of this technology has wide industry application. The combination of desulfurization, sulfur recovery, ammonia removal and recovery, and secondary cooling is very desirable for commercialization. When compared to existing COG treatment facilities, the retrofit design is expected to reduce the overall cost of desulfurization, ensure reliable removal of hydrogen sulfide from COG, and provide an alternative to overcoming a variety of environmental problems. The detailed performance data, utility requirements, and operating cost information derived from the demonstration project will be used to support the commercialization of this technology. Furthermore, demonstration of this technology will show that conventionally accepted equipment and process steps in COG treatment facilities can be eliminated, that retrofit into any existing coke-making facility in the United States is possible without significant downtime, and that COG evolved from coals mined in the United States can be cleaned successfully.

4.0 ENVIRONMENTAL CONSIDERATIONS

The overall strategy for compliance with the NEPA, cited in Section 2.2, contains three major elements. The first element, the programmatic environmental impact analysis (PEIA), was issued as a public document in September 1988. In the PEIA, the Regional Emission Data-Base and Evaluation System Model at DOE's Argonne National Laboratory was used to estimate the environmental impacts that may occur by the year 2010 if each technology reaches full commercialization and

captures 100 percent of its applicable market. The environmental impacts were compared to the no-action alternative, which assumes that use of conventional coal technologies continues through the year 2010, and that new plants use conventional flue gas desulfurization controls to meet New Source Performance Standards.

The expected performance characteristics and applicable market of the proposed coke oven gas cleaning system were used to estimate the environmental impacts that may occur if this technology reaches full commercialization. The existing thirty coke oven plants in the United States emit approximately 300,000 tons of sulfur dioxide per year. This technology could be applicable to twenty-four plants with corresponding emission levels of approximately 200,000 tons of sulfur dioxide per year. If the technology were installed in all twenty-four plants, the sulfur dioxide emissions could be reduced by 160,000 tons per year. The nitrogen dioxide emissions from burning the coke oven gas would not be affected by the technology. The ammonium sulfate, which is difficult to market or is disposed of as a solid waste would be eliminated. Solid waste from the proposed coke oven gas cleaning technology would include five tons of spent nickel catalyst every five to eight years to be returned to the vendor or disposed of as a hazardous waste in compliance with the Resource Conservation and Recovery Act. Also, ten tons of spent alumina catalyst will be produced, to be disposed of as a non-hazardous solid waste.

Depending on the configuration of the coke oven facility where the technology is being implemented, the amount of water needed for cooling purposes would remain the same or be reduced, and the amount of pollutants in the water processed in the waste water treatment system would remain the same or be reduced.

The second element of DOE's NEPA strategy for the ICCT Program involves preparation of a preselection environmental review based on project-specific environmental data and analyses that offerors supplied as a part of each proposal. This analysis, developed for internal DOE use only, contained a discussion of the site-specific EHSS issues associated with the demonstration project. It included a discussion of the advantages and disadvantages of the proposed and alternative processes reasonably available to the offeror. A discussion of the environmental impacts of the proposed project on the environment, and a list of permits that must be obtained to implement the proposal, were included. It also contained options for controlling discharges and management of solid and liquid wastes. Finally, the risks and impacts of

the proposed project were assessed. Based on the information available during selection and pre-award, no environmental, health, and safety issues have been identified that would result in any significant adverse environmental impacts resulting from construction and operation of the proposed coke oven gas cleaning system.

As the third element of the NEPA strategy, the Participant has submitted the environmental information specified in Appendix J of the PON. This detailed site- and project-specific information will be used as the basis for the development of the NEPA documents to be prepared by DOE for each project awarded funding. These documents, which are made publicly available by DOE, will be completed and approved in full conformance with the requirements of 40 CFR Parts 1500-1508 before federal funds are provided for detailed design, construction, and operation.

Obtaining the permits for construction and operation of the project is anticipated to proceed without difficulty because the project is to assist Bethlehem Steel Corporation in complying with an administrative consent order from the State of Maryland. The necessary state and federal air permits will be obtained, and the existing water and solid waste permits should not be affected by the project.

In addition to the NEPA requirement, the Participant must prepare and submit an Environmental Monitoring Plan (EMP). Guidelines for the development of the EMP are provided in Appendix N of the PON. The EMP is intended to ensure that significant technical, project-specific, and site-specific environmental data are collected and disseminated to provide health, safety, and environmental information should the technology be used in commercial applications.

The project site is located within the Chesapeake Bay Critical Area and the Maryland Coastal Zone. Plans for this project will be coordinated with the appropriate state and local agencies involved with these jurisdictions.

5.0 PROJECT MANAGEMENT

5.1 Overview of Management Organization

The DOE will enter into a Cooperative Agreement with the Participant, Bethlehem Steel Corporation, to conduct this project. The DOE will monitor the project

through the Contracting Officer (CO) and the Contracting Officer's Technical Representative (COTR). The Participant will manage the project through a Program Director, who will be assisted by a team of technical and managerial personnel from Bethlehem Steel Corporation and from the prime subcontractor, Davy/Still-Otto.

The Bethlehem Steel Corporation organizational chart for this project is shown in Figure 5.

5.2 Identification of Respective Roles and Responsibilities DOE

The DOE will be responsible for monitoring all aspects of the project and for granting or denying approvals required by this Cooperative Agreement. The DOE CO is the authorized representative of the DOE for all matters related to the Cooperative Agreement.

The DOE CO will appoint a COTR, who will be the authorized representative for all technical matters and will have the authority to issue "Technical Advice" that may do the following:

- Suggest redirection of the Cooperative Agreement effort, recommend a shifting of work emphasis between work areas or tasks, and suggest pursuit of certain lines of inquiry that assist in accomplishing the Statement of Work.

- Approve those reports, plans, and technical information required to be delivered by the Participant to the DOE under the Cooperative Agreement.

The DOE COTR does not have the authority to issue any technical advice that does the following:

- Constitutes an assignment of additional work outside the Statement of Work.

- In any manner causes an increase or decrease in the total estimated cost or in the time required for performance of the Cooperative Agreement.

- Changes any of the terms, conditions, or specifications of the Cooperative Agreement.

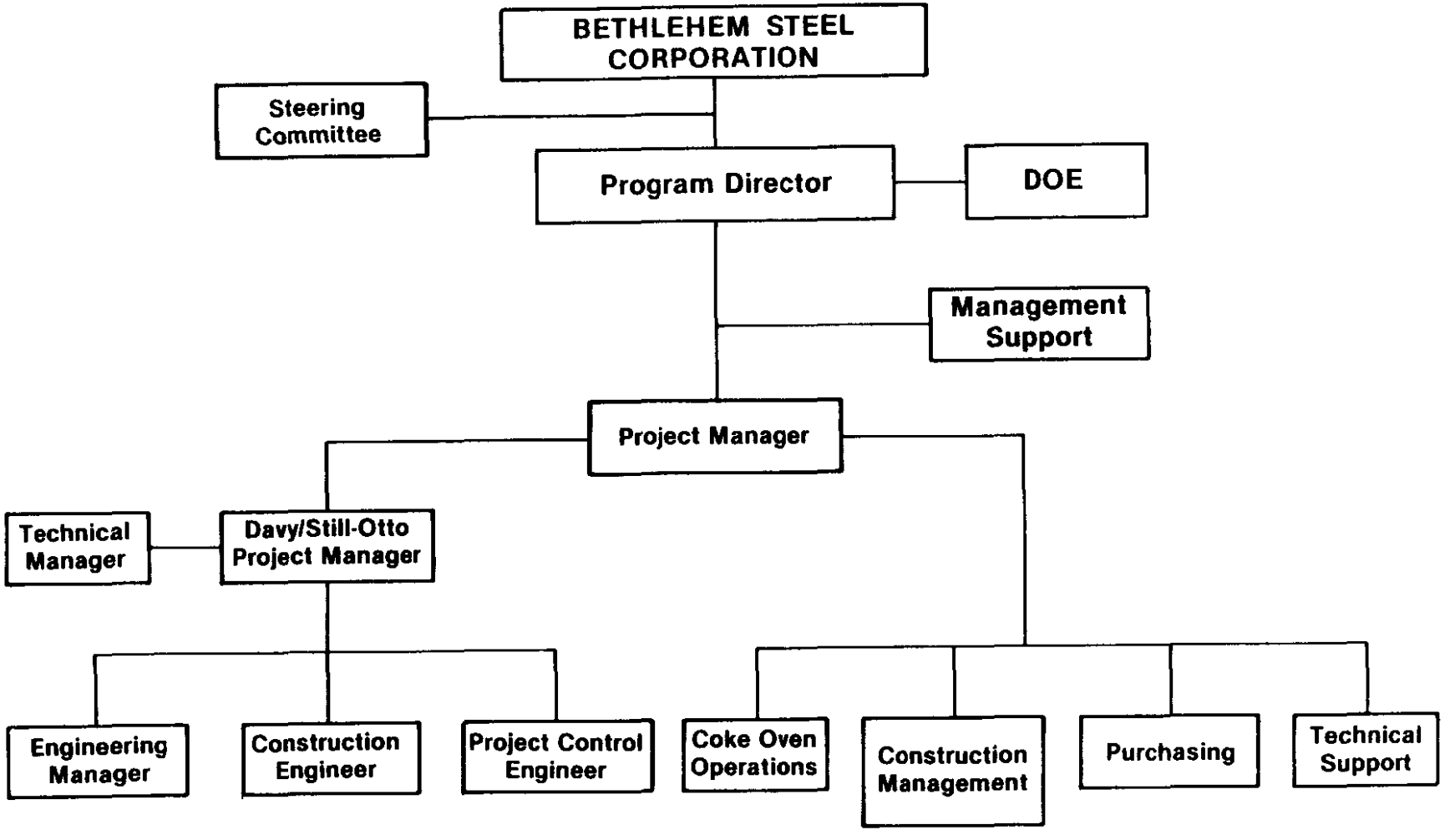

FIGURE 5. ORGANIZATIONAL CHART FOR BETHLEHEM STEEL CORPORATION'S INNOVATIVE COKE OVEN GAS CLEANING SYSTEM FOR RETROFIT APPLICATIONS DEMONSTRATION PROJECT.

NO./18,165

- Interferes with the Participant's right to perform the terms and conditions of the Cooperative Agreement.

All Technical Advice will be issued in writing by the DOE COTR.

Participant

The Program Director will coordinate the overall project and will be responsible for all communication with the DOE and for interfacing with the DOE COTR. Within Bethlehem Steel Corporation, the Program Director will report to Bethlehem Steel Corporation's Senior Vice President-Operations, who reports directly to the Chairman of the Board and Chief Executive Officer, ensuring top level attention to the project.

A Bethlehem Steel Corporation Steering Committee has been established to provide overall direction for this specific project. The committee, composed of key management personnel, includes the following:

- General Manager, Sparrows Point Plant
- General Manager, Facilities Engineering
- General Manager, Technology
- General Manager, Environmental Affairs
- Manager, Government Programs

The Bethlehem Steel Corporation Steering Committee will periodically review the progress of the work to verify that key project goals and objectives are being given the priority necessary for success. The committee will provide any special guidance as may be necessary to minimize the potential for serious problems and to help in resolving any major problems that may arise.

The Program Director will be the primary focal point for this project, having responsibility and authority for direction of the project subsequent to the signing of the Cooperative Agreement. He will be the principal representative between Bethlehem Steel Corporation and the DOE, and the principal point-of-contact between the DOE, Bethlehem Steel Corporation, and Davy/Still-Otto (the prime subcontractor).

The Program Director's responsibilities will encompass both technical and fiscal considerations, including the following:

- Overall technical coordination of the program
- Monitoring of program cost
- Monitoring of program planning
- Monitoring of program schedule
- Commitment of resources to optimize contract performance
- Reporting requirements
- Final review of all contract deliverables

The Project Manager, designated by Bethlehem Steel Corporation, is responsible for defining design criteria and performance requirements and for continual interactions as necessary to ensure that Davy/Still-Otto is getting the technical information necessary to support the detailed design of the facility. The Project Manager will also be responsible for exercising detailed management controls to see that work is done on schedule and within budget.

For Phase III, Plant Operation, the project team will be kept in place with some modification. During Phase III, the Project Manager will continue to support the Program Director in interactions with Davy/Still-Otto in order to promptly resolve any system performance problems and to assist in the evaluation of test results. The Project Manager is also responsible for assuring that system guarantees and warranties are met.

5.3 Project Implementation and Control Procedures

All work to be performed under the Cooperative Agreement is divided into three main phases. Those phases and their expected duration are as follows:

Phase I: Design and Permitting (3 months)
Phase II: Procurement, Construction, and Start-up (35 months)
Phase III: Demonstration Plant Operation (14 months)

Overall project duration is 49 months.

Budget periods will be established. Consistent with Public Law No. 100-202, as amended by Public Law No. 100-446, DOE intends to obligate sufficient funds to cover its share of the cost for each budget period.

Throughout the course of this project, reports dealing with technical, cost, and environmental aspects of the project will be prepared by Bethlehem Steel Corporation and provided to DOE.

5.4 Key Agreements Impacting Data Rights, Patent Waivers, and Information Reporting

The near-term incentive of the Participant, Bethlehem Steel Corporation, for developing this technology is that it will enable them to meet the terms of an Administrative Consent Order that requires the desulfurization of all the COG at its Sparrows Point Plant. However, it is the business of Bethlehem Steel Corporation's prime subcontractor, Davy/Still-Otto, to sell, design, and build coke-making and COG by-product facilities. Davy/Still-Otto's incentive for developing this technology is that it will enable them to market the four integrated process steps as a proven technology to desulfurize COG.

The key agreements with respect to patents and data are as follows:

- Standard data provisions are included, giving the DOE the right to have delivered, and use with unlimited rights, all technical data first produced in the performance of the Cooperative Agreement.

- An advance patent waiver has been requested which, if granted, would give Bethlehem Steel Corporation the right to elect title for all inventions under the cooperative agreement, including those of its large business subcontractors, subject to a government license and standard march-in and preference for U.S. industry provisions. Davy/Still-Otto, Bethlehem Steel Corporation's principal subcontractor under the waiver, concurred with Bethlehem Steel Corporation's waiver request.

- Sufficient third-party license rights to proprietary data and background patents have been obtained to assure commercial availability of the technology.

5.5 Procedures for Commercialization of the Technology

Significant potential exists for commercialization of the proposed technology. Thirty coke-making plants are in the United States; and approximately twenty, or two-thirds, of these facilities have no existing desulfurization systems. During the installation of the proposed demonstration plant, Davy/Still-Otto will visit these facilities to explain what is being done at Sparrows Point and describe the advantages of the technology. Following Phase III, a dedicated sales and technical team from Davy/Still-Otto will revisit each coke-making facility and use the operating and cost information obtained from the demonstration facility to actively promote the proposed technology. To assist in the commercialization, Bethlehem Steel Corporation will welcome other coke plant operators into the Sparrows Point Plant to see the performance of the system and evaluate the applicability of the system based on a full-scale domestic installation. Bethlehem Steel Corporation plans to conduct seminar(s) to inform steel companies and coke oven operators about the design, construction, and operations of the demonstration project. Since there will be a priority use of U.S. equipment in the demonstration project, the commercialization of the technology in U.S. coke oven facilities will be enhanced.

In addition, Bethlehem Steel Corporation and Davy/Still-Otto will prepare technical papers describing the proposed technology, its advantages, and the operating results from the demonstration facility. Presentations will be jointly made by Bethlehem Steel Corporation and Davy/Still-Otto at suitable coke-making and iron and steel conferences.

To summarize, Bethlehem Steel Corporation and Davy/Still-Otto will promote the commercialization of the proposed technology for desulfurization, sulfur removal and recovery, and ammonia removal and destruction.

6.0 PROJECT COST AND EVENT SCHEDULING

6.1 Project Base-Line Costs

The total estimated cost for this project is $45,239,781. The Participant contribution and the Government share in the costs of this project are as follows:

	Dollar Share ($)	Percent Share (%)
PRE-AWARD		
Government	200,000	29.3
Participant	482,000	70.7
PHASE I		
Government	2,650	5.0
Participant	50,350	95.0
PHASE II		
Government	11,713,150	34.8
Participant	21,971,686	65.2
PHASE III		
Government	1,584,200	14.6
Participant	9,235,745	85.4
TOTAL PROJECT		
Government	13,500,000	29.8
Participant	31,739,781	70.2
TOTAL	45,239,781	100.0

At the beginning of each budget period, DOE will obligate sufficient funds to pay its share of expenses for that budget period.

6.2 Milestone Schedule

Environmental permits and preliminary design will be completed prior to the execution of the Cooperative Agreement. Project construction is scheduled to start in April 1990 and will take twenty-two months to complete. Operations are scheduled to begin in the Spring of 1992 and are to continue for fourteen months. Disposition of the demonstration project equipment is not anticipated, since Bethlehem Steel Corporation plans to continue operation beyond the period of DOE cost sharing.

The critical project tasks are identified and scheduled as shown in Figure 6.

6.3 Repayment Plan

Based on DOE's recoupment policy as stated in Section 6.4 of the PON, DOE is to recover an amount up to the Government's contribution to the project. Bethlehem Steel Corporation has agreed to repay the Government in accordance with the stated Recoupment/Repayment Plan to be included in the final negotiated Cooperative Agreement.

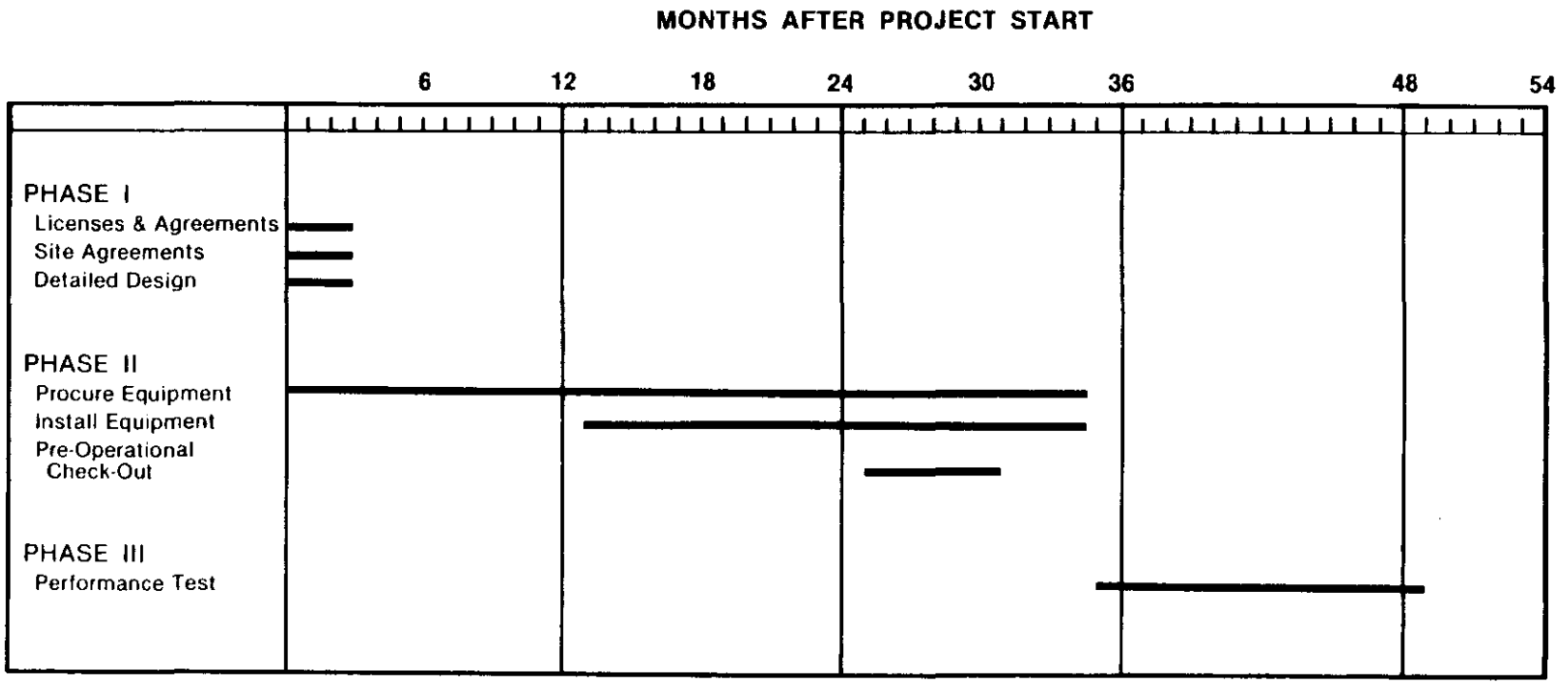

FIGURE 6. INNOVATIVE COKE OVEN GAS CLEANING SYSTEM FOR RETROFIT APPLICATIONS INDUSTRIAL DEMONSTRATION PROJECT SCHEDULE.

No./18,015