DOE/MC/29310 -- 5260
(DE96011350)

RECEIVED
OCT 15 1996
OSTI

Wabash River Coal Gasification Repowering Project Public Design Report

Topical Report
July 1995

DISCLAIMER

This report was prepared as an account of work sponsored by an agency of the United States Government. Neither the United States Government nor any agency thereof, nor any of their employees, makes any warranty, express or implied, or assumes any legal liability or responsibility for the accuracy, completeness, or usefulness of any information, apparatus, product, or process disclosed, or represents that its use would not infringe privately owned rights. Reference herein to any specific commercial product, process, or service by trade name, trademark, manufacturer, or otherwise does not necessarily constitute or imply its endorsement, recommendation, or favoring by the United States Government or any agency thereof. The views and opinions of authors expressed herein do not necessarily state or reflect those of the United States Government or any agency thereof.

Work Performed Under Contract No.: DE-FC21-92MC29310

For
U.S. Department of Energy
Office of Fossil Energy
Morgantown Energy Technology Center
Morgantown, West Virginia

MASTER

By
Wabash River Coal Gasification Repowering Project
Joint Venture
2500 Citywest Boulevard, Suite 150
Houston, Texas 77042

DISTRIBUTION OF THIS DOCUMENT IS UNLIMITED

DISCLAIMER

Portions of this document may be illegible in electronic image products. Images are produced from the best available original document.

DOE/MC/29310 -- 5260
(DE96011350)
Distribution Category UC-109

Wabash River Coal Gasification Repowering Project
Public Design Report

Topical Report
July 1995

Work Performed Under Contract No.: DE-FC21-92MC29310

For
U.S. Department of Energy
Office of Fossil Energy
Morgantown Energy Technology Center
P.O. Box 880
Morgantown, West Virginia 26507-0880

By
Wabash River Coal Gasification Repowering Project
Joint Venture
2500 Citywest Boulevard, Suite 150
Houston, Texas 77042

Disclaimer

This report was prepared as an account of work sponsored by an agency of the United States Government. Neither the United States Government nor any agency thereof, nor any of their employees, makes any warranty, express or implied, or assumes any legal liability or responsibility for the accuracy, completeness, or usefulness of any information, apparatus, product, or process disclosed, or represents that its use would not infringe privately owned rights. Reference herein to any specific commercial product, process, or service by trade name, trademark, manufacturer, or otherwise does not necessarily constitute or imply its endorsement, recommendation, or favoring by the United States Government or any agency thereof. The views and opinions of authors expressed herein do not necessarily state or reflect those of the United States Government or any agency thereof.

DOE/MC/29310 -- 5260
(DE96011350)
Distribution Category UC-109

Wabash River Coal Gasification Repowering Project

Final Report
July 1995

Work Performed Under Contract No.: DE-FC21-92MC29310

For
U.S. Department of Energy
Office of Fossil Energy
Morgantown Energy Technology Center
P.O. Box 880
Morgantown, West Virginia 26507-0880

By
Wabash River Coal Gasification Repowering Project
Joint Venture
2500 Citywest Boulevard, Suite 150
Houston, Texas 77042

PUBLIC DESIGN REPORT

TABLE OF CONTENTS

		PAGE
SECTION I:	Overview	1
SECTION II:	Project History	2
SECTION III:	Project Technical Overview	7
SECTION IV:	Description of Systems in the Coal Gasification Process	12
SECTION V:	Supporting Facilities in the Coal Gasification Process	16
SECTION VI:	Description of Systems in the Air Separation Unit	18
SECTION VII:	Description of Systems in the Combined Cycle Power Unit	21
SECTION VIII:	Design Considerations for the HRSG	24

APPENDIX 1 - OVERALL MATERIAL AND ENERGY BALANCE

APPENDIX 2 - SUMMARY PROCESS BLOCK DIAGRAM

APPENDIX 3 - OVERALL PLOT PLAN

APPENDIX 4 - REPRESENTATIVE ELEVATION DRAWING

APPENDIX 5 - EQUIPMENT LIST

APPENDIX 6 - PROJECT MILESTONE SCHEDULE

I. OVERVIEW

The Wabash River Coal Gasification Repowering Project (the Project), conceived in October of 1990 and selected by the United States Department of Energy as a Clean Coal IV demonstration project in September 1991, is expected to begin commercial operations in August of 1995.

The Participants, Destec Energy, Inc., (Destec) of Houston, Texas and PSI Energy, Inc., (PSI) of Plainfield, Indiana, formed the Wabash River Coal Gasification Repowering Project Joint Venture (the JV) to participate in the DOE's Clean Coal Technology (CCT) program by demonstrating the coal gasification repowering of an existing 1950's vintage generating unit affected by the Clean Air Act Amendments (CAAA). The Participants, acting through the JV, signed the Cooperative Agreement with the DOE in July 1992.

The Participants jointly developed, and separately designed, constructed, own, and will operate an integrated coal gasification combined cycle (CGCC) power plant using Destec's coal gasification technology to repower Unit #1 at PSI's Wabash River Generating Station located in Terre Haute, Indiana. PSI is responsible for the new power generation facilities and modification of the existing unit, while Destec is responsible for the coal gasification plant.

The Project demonstrates integration of the pre-existing steam turbine generator, auxiliaries, and coal handling facilities with a new combustion turbine generator/heat recovery steam generator tandem and the coal gasification facilities.

The Project will convey substantial benefits to PSI and its customers. It will process locally-mined Indiana high-sulfur coal to produce 262 megawatts (net) of clean, low-cost, energy efficient baseload capacity. The Project is anticipated to function as a substantial element of PSI's plan to comply with the Clean Air Act because, with SO_2 emissions at less than .02lb/MMBTU of fuel, it exceeds the Phase II requirements of those regulations. The Project will dispatch as base load in PSI's system on the basis of both environmental emissions and efficiency, with a net plant heat rate of approximately 9,000 BTU/kWh (HHV) and the ability to produce some of the lowest cost electricity on the PSI system. It is expected to operate as part of PSI's baseload generating resources for a period of at least 25 years, the first three years of which function as the Demonstration Period under the DOE CCT program.

When commercial operation is achieved, the project will represent the world's largest single-train coal gasification combined cycle (CGCC) power plant to be operated in a fully commercial setting. In addition, the Project will emit lower emissions than other high sulfur coal fired power plants, will improve the heat rate of the repowered unit by approximately twenty percent, and will have the lowest capital cost in terms of $/KW of all past and current CGCC demonstration Plants. The Project demonstrates how coal gasification combined cycle technology can be used to meet domestic and global energy and environmental needs.

II. PROJECT HISTORY

2.1 Background

The Destec Coal Gasification process was originally developed by the Dow Chemical Company during the 1970's in order to diversify it's fuel base from natural gas to lignite and other coal. The technology being used at Wabash is an extension of the experience gained from that time through pilot plants and up to the Louisiana Gasification Technology, Inc. (LGTI) facility in Plaquemine, Louisiana. LGTI is a 160 MW coal gasification facility which has been operating since April 1987.

Using data and experience gained at LGTI, Destec approached PSI in 1990 and discussions concerning the Wabash Project were initiated. Subsequently, Destec and PSI formed a joint venture for the purpose of participating in the U.S. DOE's Clean Coal Technology Program. In September 1991, the Project was selected by the U.S. DOE as a Clean Coal Round IV project to demonstrate integration of an existing PSI steam turbine generator and auxiliaries, a new combustion turbine, a heat recovery steam generator, and a coal gasification facility to achieve improved efficiency and reduced emissions. In July 1992, a Cooperative Agreement was signed with the U.S. DOE. Under the terms of this agreement, the Wabash River Coal Gasification Repowering Project Joint Venture developed, constructed, and will operate a coal gasification combined cycle (CGCC) facility, with the U.S. DOE providing cost-sharing funds for construction and a three year Demonstration Period.

2.2 Project Organization and Structure

In general, Destec has responsibility for financing, construction, and operation of the gasification portion of the Project, and PSI has responsibility for financing, construction, and operation of the power generation portion of the Project. The Project involved a construction period of approximately two years and an operating period of at least 25 years.

Two agreements establish the basis for the relationship between PSI and Destec. The Joint Venture Agreement created the Wabash River Coal Gasification Repowering Project Joint Venture in order to administer the Project under the DOE Cooperative Agreement. The Gasification Services Agreement includes the commercial terms between PSI and Destec under which the Project will be developed and operated. The structure of the Gasification Services Agreement allows the Project to be integrated for high efficiency and provides for the use of common facilities to eliminate duplication. The major provisions of these agreements include:

PSI Responsibilities:

- to build the power generation facility to an agreed common schedule
- to own and operate the power generation facility
- furnish Destec with a site, coal, electric power, stormwater and wastewater facilities, and other utilities and services
- pay a monthly fee to Destec for gasification services

Destec Responsibilities:

- to build gasification facility to an agreed common schedule
- own and operate the coal gasification facility
- guarantee operating and environmental performance of the coal gasification facility
- deliver syngas and steam to the power generation facility.

Sargent & Lundy provided engineering services to PSI for the design and procurement of the modifications to the existing station, the new power block equipment and the system integration interface to Destec. PSI managed the construction of those facilities. Dow Engineering Company, previous engineer for the LGTI facility, provided engineering services to Destec for the design and procurement of the gasification plant and the system integration interface to PSI. The air separation unit that provides oxygen for the gasification process was designed and built by Liquid Air Engineering Corporation. Destec managed the construction of those facilities.

2.3 Site Selection and Preparation

Early site feasibility studies resulted in locating the new coal gasification repowering facilities northwest of PSI's existing Wabash River Generating Station. The land for the Project was donated by the Peabody Coal Company. This property was formerly the Viking Mine, which once supplied the existing station with coal.

Locating the Project adjacent to the existing six-unit Wabash Generating Station minimized the cost of expensive alloy steam piping associated with connecting the repowered Unit #1 steam turbine to the new CGCC facilities. Only Unit #1, a Westinghouse reheat unit originally placed in service in 1953, was repowered as part of the Project. Other existing facilities to be used by the Project include the railroad, coal unloading facilities, the steam turbine, generator, condenser and auxiliaries, the substation, and related interconnects. The pulverized coal fired boiler associated with the #1 Unit was decommissioned. No new construction was required within the existing boiler and turbine buildings except for the steam piping and service water interconnections.

Although the integration of the coal gasification project with the existing station provides efficiency and cost advantages, the limitations on space presented challenges during construction, particularly the challenge of managing a construction manpower peak of over 1000 people for two separately-managed jobs on a small site.

Additional site challenges included: 1) the need to reorient the physical layout of the gasification plant to protect against potential subsidence (based on site-specific data obtained during the engineering phase); 2) unstable mine spoils that made planned construction laydown and parking areas unsuitable for use; and 3) all of the site preparation work occurred in the spring of 1993, concurrent with rain that caused the 500 year flood in the midwest. Site mobilization was delayed three months.

2.4 Permitting and Regulatory Approval

As a DOE sponsored project, the Project was subject to the requirements of the National Environmental Policy Act (NEPA). PSI, Destec and two environmental consulting firms were involved in the preparation of a detailed environmental information volume which was the basis for DOE's development of an Environmental Assessment of the impact of the Project. The favorable NEPA assessment resulted in DOE issuing a Finding of No Significant Impact (FONSI) in May 1993. Although the DOE supported the joint venture's efforts by expediting the review process, the FONSI was received approximately six months later than the original Project schedule. The Project was the first of it's scope, under the DOE Clean Coal Technology Program, to obtain this status. The FONSI also demonstrates the advantage of a repowering application over greenfield construction.

The Project was also required to obtain other environmental permits. The most significant of these was the air permit. Because Destec had responsibility for the gasification plant and PSI had responsibility for the power generation portion of the Project, it was necessary for Destec and PSI to each obtain separate permits. However, for consistency and expediency, the Participants elected to perform air quality modeling studies on a combined basis. The total project was considered a modification to the PSI Wabash River Generating Station and environmental impact information was provided in combined form when possible. Communications between PSI, Destec, environmental consultants, and the permitting agencies (both state and federal) were managed through a multitude of face-to-face meetings. Both Destec and PSI received the requisite air permits in May 1993.

In addition to the challenge of permitting a joint venture-type project, the Project faced the additional challenge of educating the permitting agencies about CGCC. Destec was specifically concerned about protection of proprietary technology and establishing a reasonable permitting precedent for future CGCC plants. PSI was concerned about obtaining credit for sulfur emission reductions. These goals were obtained, essentially establishing CGCC technology as a new emission credit methodology in the process.

Finally, in order for PSI to include its portion of the Project in its ratebase, it was necessary to obtain a Certificate of Need from the Indiana Utility Regulatory Commission (IURC). PSI and Destec both prepared testimony for the IURC and a Certificate of Need was issued to PSI in May 1993. Careful coordination between PSI and Destec, combined with clear communication between PSI and the Indiana Utility Regulatory Commission (IURC) allowed the Project to receive a Certificate of Need despite opposition from others who wanted to supply capacity to PSI's system and an IURC that was unfamiliar with CGCC. Careful structuring of the commercial arrangements between PSI and Destec, especially with regard to risk (through the Gasification Services Agreement), was essential to developing a project that could obtain regulatory approval. PSI received the required Certificate of Need in May 1993.

2.5 Construction

Extensive pre-construction site work was required to level the Project site. Over 1 million cubic yards of dirt was moved in 1993 prior to mobilization of construction contractors. New construction took place in two areas. The 15 acre plot containing the gasification island, oxygen plant, water treatment facility and gas turbine-heat recovery steam generator block is on a hill overlooking the existing station. The new wastewater and storm water ponds are located nearby in an area previously used as an ash pond.

New facilities for the project, and the party responsible for their construction, include the following:

Gasification Facilities (Destec):

- Slurry preparation
- Gasification and heat recovery
- Slag removal
- Gas cleanup
- Sulfur recovery
- Oxygen plant
- Control, administration & maintenance building

Power Generation Facilities (PSI):

- Combustion turbine
- Heat recovery steam generator
- Modifications to coal handling
- Oil storage tanks
- Piping additions
- Water treatment facilities
- Control room and buildings
- Stormwater and wastewater ponds

Early in the construction schedule, activities were hampered by unusual weather conditions. The summer of 1993 was the wettest summer in Indiana history, with rains reaching the 500-year flood level. This was followed by the wettest November since 1888 and snow from Halloween through Easter. In addition, 1994 brought the coldest January on record for the state of Indiana, and ice storms shut down construction work in February. In order to stay on schedule, both PSI and Destec selectively employed 7-day construction schedules while trying to balance budget and schedule needs.

Peak construction activity brought over 1000 workers to the site daily, all working for a host of contractors and subcontractors, all ultimately reporting to either Destec or PSI. Project management expertise and coordination with, and support from, the local labor unions and contractors was critical to maintaining the Project schedule.

Other significant construction challenges were encountered, including:

- transport of large equipment to the site (some shipments had less than 2" clearance), despite flooded rivers, transportation strikes, and cross-country transport logistics;
- coordination of timing for interconnection responsibilities between the Destec and PSI portions of the Project; this challenge became critical as permitting and weather delays compressed the original construction schedule;
- the need to carry out a complex construction job with minimal impact to the existing PSI generating station;
- the need to make several heavy equipment lifts (up to 650,000 lbs) in a short period of time without disrupting other site activities.
- managing the disruption and schedule pressure associated with replacing key construction subcontractors.

The challenges of weather, schedule constraints, a small site, ongoing operations, component delivery and erection problems, the complexity of the job, labor shortages and subcontractor problems were all successfully met due to effective communication and coordination between the two Participants.

2.6 Startup and Commissioning Activities

The Project created approximately 100 new operations and support jobs. Hiring was essentially complete by late 1994. Training activities began in mid 1994 and were virtually complete by spring 1995. PSI, due to limited experience with gas fired turbines, developed new training programs. Among these is a full scale power block simulator developed with funding from EPRI. This simulator is being used as a training tool for the Project. In a modified form it can also be used for future CGCC projects.

Detailed commissioning packages were developed jointly by construction and operating personnel. Coordination of startup and commissioning activities between Destec and PSI, and between construction and operations was a highly beneficial activity.

Coal for the Project, a high sulfur midwestern bituminous from the #6 seam at Peabody's Hawthorn Mine, was selected with a view toward optimizing both the cost of coal and the overall performance of the CGCC system. It will be stored separately from the compliance coal to be burned in Units 2 through 6 of the existing station. Existing coal unloading facilities will be shared with the new facility.

The Participants have the additional flexibility to substitute an alternative feedstock once per year for a maximum of 60 days during each of the three years of the Demonstration Period if they so choose. The alternative feedstock actually chosen for testing will be selected from among those which represent either a presently viable opportunity for commercial application of the subject technology or an opportunity to evaluate the system-wide economic efficiency of alternative coals.

III. PROJECT TECHNICAL OVERVIEW

3.1 General Design

The Destec coal gasification process features an oxygen-blown, two stage entrained flow gasifier. A process block flow diagram is shown in Appendix 2. The coal is ground with water to form a slurry which is then pumped into a gasification vessel where oxygen is added to form a hot, raw gas through partial combustion. The non-carbon minerals in the coal melt and flow out of the bottom of the vessel to leave the process chemically bound as slag - a black, glassy, nonleaching, sand-like material. The hot, raw gas is then cooled in a heat exchanger which produces high pressure steam. Particulates, sulfur, and other impurities are removed from the gas before combustion to make it an acceptable fuel for the gas turbine.

The syngas is piped to a General Electric 7FA high temperature, combustion turbine generator which produces approximately 192 MW of electricity with syngas fuel. The Project is the first application of advanced gas turbine technology for syngas fuel. A heat recovery steam generator recovers gas turbine exhaust heat to produce high pressure steam. This steam and the steam generated in the gasification process supply the pre-existing, repowered steam turbine generator in PSI's plant to produce an additional 104 MW. Plant auxiliaries in the power generation and coal gasification areas consume approximately 34 MW, for a nominal net power generation for export of 262 MW.

The combustion turbine has steam injection for NOx control. The amount of this injection flow is reduced compared to conventional systems because the syngas burned in the combustion turbine is moisturized at the gasification facility, making use of low level heat in the process. The water consumed in this process is continuously made up at the power block by clarification and treatment of river water.

The air separation unit (ASU), which provides oxygen and nitrogen for use in the gasification process, is not an integral part of the plant thermal balance. The ASU will utilize services such as cooling water and steam from the gasification facilities, and will be operated from the gasification plant control room. The air compression at the ASU is not integrated with the combustion turbine compressor. While some studies show that such integration can improve plant efficiencies, project participants felt that implementing new compression integration concepts would detract from the operability and availability of the WRCGRP in most operating scenarios.

Natural gas will be used for startup of the gasifier. Indiana Gas Company installed a new natural gas supply line to service the project.

The CGCC plant will have two commercial byproducts during operation. Sulfur removed as 99.7 percent pure elemental sulfur via the gas clean-up systems will be marketed to sulfur users. Slag will be sold as aggregate in asphalt roads and as structural fill in various types of construction applications.

The Wabash plant is designed to accept coal with a maximum sulfur content of 5.9% (dry basis) and a minimum energy content of 13,500 BTU/pound (moisture and ash free basis).

3.2 General Process flow

Although Destec and PSI independently designed, procured, and constructed their respective portions of the WRCGRP, cooperation in the design effort and integration of systems allowed the participants to maximize efficiency via thermal integration and reduce costs by minimizing redundant systems. Condensate, feedwater, and steam flows are exchanged between the gasification island and the powerblock HRSG to maximize efficiency by making the best use of different levels of heat in each area.

Condensate from the steam turbine generator hotwell ("cold condensate" at about 88°F) is pumped to the power block, conditioned for cycle chemistry requirements, and transferred to the gasification plant, where it is heated by hot syngas in need of cooling for the last stages of sulfur removal. Sulfur is removed from the syngas using conventional "cold" gas cleanup systems, some of which must operate at near-ambient temperatures.

This stream, now called "warm condensate", is combined with condensate produced by various intermediate pressure steam uses at the gasification plant and returned to the power block for combined cycle use. Intermediate pressure steam is supplied to the gasification plant by the steam turbine in the form of cold reheat steam. The warm condensate (about 185°F) is returned to the power block, where it is heated in the feedwater heater, which is the last heating section of the HRSG. This stream is then fed to the powerblock deaerator.

Boiler feedwater from the power block deaerator is pumped through the HRSG economizer section. The water temperature is now elevated to approximately 560°F. A portion of this hot boiler feedwater flow continues through the HRSG in the conventional manner and becomes high pressure saturated steam (at about 1650 PSIA) in the HRSG evaporator section. The other split of hot boiler feedwater from the HRSG economizer is piped across the fence to the gasification plant, where it is split again. The main part of this flow acts as boiler feedwater for the gasification plant boiler, becoming high pressure saturated steam (1650 PSIA, 640°F). The remaining split of hot boiler feedwater is used for heating in the gasification process before it is piped back to the economizer section of the HRSG as "boiler feedwater return" at about 410°F. High pressure saturated steam from the gasification plant is piped to the powerblock where it is combined with high pressure saturated steam from the HRSG. The combined flow passes through the HRSG superheater, exits at about 1010°F, and becomes the throttle steam for the repowered steam turbine. The cold reheat extraction flow from the steam turbine is heated in the HRSG and returned to the steam turbine after relinquishing splits for gas turbine NOx control steam injection and gasification plant intermediate pressure steam uses. This hot reheat flow is expanded through the steam turbine and condensed.

3.3 Technical Advances

The application of integrated coal gasification combined cycle technology to the repowering of an existing coal-fired power generating unit demonstrates a technical advance in and of itself.

More specifically, high energy efficiency and superior environmental performance while using high sulfur bituminous coal is the result of several improvements to Destec's gasification technology, including:

- **Hot/Dry Particulate Removal**, applied here at full commercial scale.
- **Syngas Recycle,** which provides fuel and process flexibility while maintaining high efficiency.

- **A High Pressure Boiler**, which cools the hot, raw gas by producing steam at a pressure of 1,600 psia.
- **A Dedicated Oxygen Plant**, which produces 95% pure oxygen for use by the Project. Use of 95% purity increases overall efficiency of the Project by lowering the power required for production of oxygen.
- **Integration Between the Heat Recovery Steam Generator and the Gasification Facility**, which has been optimized to yield higher efficiency and lower operating costs.
- The **Carbonyl Sulfide ("COS") Hydrolysis system**, which will attain the high percent removal of sulfur at the Project.
- The **Slag Fines Recycle system**, which recovers carbon remaining in the slag byproduct stream and recycles it back for enhanced carbon conversion. This also results in a high quality byproduct slag.
- **Fuel Gas Moisturization**, which uses low-level heat to reduce steam injection required for NO_x control. The water required for this flow is continuously made up at the power block by water treatment systems which clarify and treat river water.
- **Sour water treatment**, which is processed to allow more complete recycling of combustible elements, thereby reducing waste water and increasing efficiency.

The Project's superior energy efficiency is also attributable to the power generation facilities included in the Project. These facilities incorporate the latest advancements in combined cycle system design while accommodating design constraints necessary to repower the exiting Unit #1 steam turbine, including:

- The Project incorporates an Advanced Gas Turbine with new design compressor and turbine stages, higher firing temperatures and higher pressure ratios, specially modified for syngas combustion.
- Integration between the heat recovery steam generator ("HRSG") and the gasification facility has been optimized at the Project to yield high efficiency and lower operating costs.
- Repowering of the Existing Steam Turbine involved upgrading the unit in order to accept increased steam flows generated by the HRSG. In this manner, the cycle efficiency is maximized because more of the available energy in the cycle is utilized.

3.4 Operations

Although Destec and PSI will independently operate their respective gasification and power generation facilities, significant integration exists at the operating level. Operating interface parameters and other key data will be interchanged continuously between the gasification and power generation control rooms. In normal operation, syngas production will follow combustion turbine fuel demand. Thermal balance between the facilities is flexible to a certain extent, utilizing the heat recovery steam generator and gasification facility heat exchangers to follow syngas production.

Operation of the facilities will be closely coordinated during startup and shutdown. The combustion turbine operates on auxiliary fuel (#2 distillate) at low loads during startup and

shutdown. A "flying switch" will be made to syngas and the combustion turbine will ramp up to full load at its normal rates.

3.5 Cost and Efficiency

Integration of the new and existing power generation facilities and the new gasification facility have resulted in a lower installed cost and better efficiency than other "environmentally equivalent" coal based power generating projects. Reduced development effort and a shorter schedule have also resulted from choosing to repower an existing station rather than developing a greenfield installation. This advantage is evidenced by the rapid development and construction progress described below.

The net plant heat rate for the entire new and repowered unit is expected to be approximately 9000 Btu/kWh, representing an approximate 20 percent improvement over the existing unit. Certain major component manufacturer margins and guarantees (combustion turbine, HRSG, HTHRU, *etc.*) are included in this energy balance calculation; actual operation is expected to be slightly better. This heat rate will be among the lowest of commercially operated coal-fired facilities in the United States. The Project is expected to produce some of the lowest cost electricity on the PSI system.

Repowering the existing unit, and utilizing the existing site facilities mentioned above, in addition to the existing steam turbine generator, auxiliaries, and electrical interconnections, represent an installed cost savings of approximately $30 to $40 million as opposed to an entirely new, greenfield installation.

The total estimated installed cost for the Project is $389 million, of which Destec's and PSI's facilities are $255 million and $134 million, respectively. These estimated figures include escalation through 1995 (5% annually), environmental and permitting costs, startup costs, and license fees. On this basis, the total estimated developed and installed cost of the project is less than $1500 per kW of net generation.

The U.S. Department of Energy's Clean Coal Technology Program (Round IV) provided partial funding for the project ($169 million for the design and construction phases, and $52 million for the three year demonstration phase). PSI and Destec will provide the balance of the funds for their respective portion of the job. The DOE funding reduces the estimated installed cost to less than $900 per kW of net generation.

3.6 Environmental Benefits

The plant is designed to substantially outperform the standards established in the Clean Air Act Amendments (CAAA) for the year 2000. The Destec gasification technology will remove at least 98 percent of the sulfur in the coal. Expected SO_2 emissions will be less than 0.02 pounds per MMBTU of fuel. NO_x emissions from both the gasification block and the power block are expected to be less than 0.7 lb/MWh. CO_2 emissions will also be reduced approximately 20 percent on a per kilowatt-hour basis by virtue of the increased system efficiency. Figure 1 compares emissions of the pre-existing Wabash Unit #1 with expected emissions from the Project. By providing an efficient, reliable and environmentally superior alternative to utilities for achieving compliance with the CAAA requirements, the Wabash Project represents a significant demonstration of Clean Coal Technology.

A. EXPECTED PROJECT EMISSIONS

CGCC EMISSIONS	SO_2	NO_X	CO	PM	PM-10	VOC
Gasification Block Tons/Yr.	23	18	124	25	20	12
Power Block Tons/Yr.	204	774	374	46	42	13
Total CGCC Tons/Yr. (note 1)	227	792	498	71	62	25

B. COMPARISON TO EXISTING UNIT

EMISSIONS, LBS/MWH	SO_2	NO_X	CO	PM	PM-10	VOC
Unit 1 Boiler	38.2	9.3	0.64	0.85	0.85	0.03
CGCC	0.21	0.75	0.47	0.07	0.06	0.02
EMISSIONS, LBS/MMBtu						
Unit 1 Boiler	3.1	0.8	0.05	0.07	0.07	0.003
CGCC	0.02	0.08	0.05	0.01	0.01	0.003

Note: 1) Based on 2,065,600 MW/hr estimated annual generation (262 MW at 90% capacity factor)

Figure 1 - Environmental Emissions

IV. DESCRIPTION OF SUBSYSTEMS IN THE COAL GASIFICATION PROCESS

The coal gasification plant consists of several subsystems including coal slurry preparation, gasification and high temperature heat recovery, slag dewatering and handling, particulate removal and low temperature heat recovery, sour water treatment, acid gas removal, sulfur recovery, tail gas treatment, tank vent incineration, and a flare. Each of these subsystems is briefly discussed below.

4.1 Coal Slurry Preparation

Coal slurry feed for the gasification plant is produced by wet grinding in an open circuit rod mill. Coal is delivered by the PSI conveyor into the rod mill feed hopper. In order to produce the desired slurry solids concentration, coal is fed to the rod mill with water that is recycled from other areas of the gasification plant. The use of a wet rod mill reduces fugitive particulate emissions from the grinding operations. Collection and reuse of water within the gasification plant minimizes water consumption and the volume of effluent ultimately needing treatment.

Prepared slurry is stored in an agitated tank. The capacity of the tank is sufficiently large to supply the gasifier needs so that the rod mill may undergo routine maintenance without interrupting gasifier operation.

All tanks, drums, and other areas of potential atmospheric exposure of the product slurry or recycle water are covered and vented into the tank vent collection system for vapor emission control. The entire slurry preparation facility is enclosed, with interior surfaces finished and curbed to contain spills, leaks, and wash down water. All water collected is carried by a trench system to a sump where it is pumped into the recycle water storage tank.

4.2 Gasification and High Temperature Heat Recovery

The Destec gasification process consists of two-stages, a slagging first stage and an entrained flow non-slagging second stage. The slagging section, or first stage, is a horizontal refractory lined vessel into which oxygen and preheated coal slurry are atomized via opposing burner nozzles. The coal slurry and oxygen are fed in partial combustion quantities at an elevated temperature and pressure to produce a high temperature syngas. The oxygen feed rate to the burners is carefully controlled to maintain gasification temperature above the ash fusion point, thereby ensuring good slag removal while producing high quality syngas.

The coal is almost totally gasified in this environment to form synthetic fuel gas consisting primarily of hydrogen, carbon monoxide, carbon dioxide and water. Sulfur in the coal is converted to primarily hydrogen sulfide (H_2S) with a small portion converted to carbonyl sulfide (COS); both are easily removed downstream in the process.

Mineral matter in the coal forms a molten slag which flows continuously through the tap hole into a water quench bath located below the first stage. The slag is then crushed and removed through a continuous pressure let-down system as a slag/water slurry. This continuous slag removal technique eliminates high-maintenance, problem-prone lock hoppers and completely prevents the escape of raw gasification products to the atmosphere during slag removal. The slag is then dewatered and removed from the process.

The raw synthetic gas generated in the first stage flows up from the horizontal section into the second stage of the gasifier. The non-slagging second stage of the gasifier is a vertical refractory-lined vessel into which additional coal slurry is injected via an atomizing nozzle to mix with the hot syngas stream exiting the first stage. This additional coal feed serves to lower the temperature of the gas exiting the first stage by the endothermic nature of the equilibrium reactions. The coal undergoes devolatilization and pyrolysis thereby generating more gas at a higher heating value. No oxygen is introduced into the second stage. The partially reacted coal (char) is entrained overhead with the gas.

The gas and entrained particulate matter exiting the gasifier system is further cooled in a firetube heat recovery boiler system where saturated 1650 psia steam is produced. Steam from this high temperature heat recovery system is super-heated in the gas turbine heat recovery system for use in power generation.

4.3. Slag Dewatering and Handling

The slag slurry leaving the crusher on the outlet of the quench section of the gasifier flows continuously through the pressure let down system and into a dewatering bin. The bulk of the slag settles out in the bin while water overflows a weir in the top of the bin and goes to a settler where the remaining slag fines settle. The clear water gravity flows out of the settler and is pumped through heat exchangers where it is cooled as the final step before being returned to the gasifier quench section. Dewatered slag is loaded into a truck or rail car for transport to market or its storage site. The fines slurry from the bottom of the settler is recycled to the slurry preparation area.

The dewatering system contains dewatering bins, a water tank and a water circulation pump. All tanks, bins, and drums are vented to the tank vent collection system. Clean make-up water for the system is supplied from the sour water treatment system.

4.4 Particulate Removal and Low Temperature Heat Recovery

The raw gas leaving the high temperature heat recovery unit passes through a barrier filter unit to remove the particulates. The recovered particulates are recycled to the gasifier. The particulate-free gas is then sent to the carbonyl sulfide (COS) hydrolysis unit.

Since COS is not removed efficiently by the Acid Gas Removal (AGR) system, the COS must be converted to H_2S in order to obtain the high sulfur removal level. This is accomplished by a catalytic reaction of the COS with water vapor to create hydrogen sulfide and carbon dioxide. The hydrogen sulfide formed is removed in the AGR section and the carbon dioxide is carried with the raw syngas to the turbine.

After exiting the COS hydrolysis unit, the syngas is cooled through a series of shell-and-tube heat exchangers before entering the AGR system. This cooling condenses water, ammonia, carbon dioxide, and some hydrogen sulfide (H_2S) in a solution which is collected and sent to the sour water treatment unit. The heat removed prior to the AGR system provides moisturizing heat for the product syngas, steam for the AGR H_2S stripper, and condensate heat. Cooling water provides trim cooling to ensure the syngas enters the AGR at a sufficiently low temperature. The cooled "sour" syngas is fed to an absorber in the AGR system where the solvent selectively removes the H_2S to produce a "sweet" syngas (H_2S free syngas).

4.5 Sour water Treatment System

Water condensed during cooling of the "sour" syngas contains small amounts of dissolved gases, i.e. carbon dioxide (CO_2), ammonia (NH_3), hydrogen sulfide, and trace contaminants. The gases are stripped out of the "sour" water in a two step process. First the CO_2 and the bulk of the H_2S is removed in the CO_2 stripper column by steam stripping. The stripped gasses are directed to the Sulfur Recovery Unit (the SRU). The water exits the bottom of the column, is cooled and a major portion is recycled to slurry preparation. The remaining water is treated in the ammonia stripper column to remove the ammonia, filtered to remove trace organics and solids, and then directed to the wastewater management system. The stripped ammonia is combined with the recycled slurry water. Water recycled to the slurry preparation area is cooled in an exchanger using cooling tower water.

4.6 Acid Gas Removal (AGR)

The first step in the sulfur removal process is the Acid Gas Removal system (AGR) which removes the hydrogen sulfide present in the "sour" syngas. The AGR system also produces concentrated H_2S that is fed to the SRU. The AGR system does not produce any emissions to the atmosphere.

Hydrogen sulfide is removed in an absorber column at high pressure and low temperature using a H_2S solvent, methyldiethanolamine (MDEA). The hydrogen sulfide rich MDEA/water solution exits the absorber and flows to a reboiled stripper column where the hydrogen sulfide is removed by lowering the pressure and steam-stripping the amine. The concentrated H_2S exits the top of the stripper column and flows to the sulfur recovery unit. The lean amine exits the bottom of the stripper and is cooled, then recycled to the absorber.

4.7 Moisturizing of Product Syngas

The "sweet" syngas is sent from the AGR to the low temperature heat recovery area and moisturized. Moisturization is accomplished by contacting the "sweet" syngas with hot water countercurrently in a high surface area contacting column. After the moisturizer, the syngas is preheated in a shell and tube exchanger using hot boiler feed water before being directed to the combustion turbine.

4.8 Sulfur Recovery Unit (SRU)

The concentrated hydrogen sulfide from the AGR system, and the CO_2 and H_2S stripped from the sour process water, are fed to a reaction furnace followed by a waste heat recovery boiler followed by a series of catalytic reaction stages where the H_2S is converted to elemental sulfur. Oxygen is utilized in the reaction furnace to reduce equipment size and allow an appropriate temperature in the furnace. The sulfur from the sulfur recovery unit (SRU) is recovered as a molten liquid and sold as a by-product.

The tailgas stream, composed of mostly carbon dioxide and nitrogen with trace amounts of hydrogen sulfide and sulfur dioxide, exits the last catalytic stage and is directed to tailgas recycling.

4.9 Tailgas recycling

The tailgas is hydrogenated to convert all the sulfur species to H_2S, cooled to condense the bulk of the water, compressed, and then injected into the gasifier. This allows for a very high sulfur removal efficiency while requiring low recycle requirements.

4.10 Incineration System

The tank vent stream is composed of air purged through various in-process storage tanks and may contain very small amounts of acid gases. The high temperature incinerator efficiently destroys H_2S left in the tail gas stream before the tail gas is vented to the atmosphere. During process upsets, the SRU tailgas stream may be directed to a high temperature incinerator rather than the gasifier. The high temperature produced in the incinerator thermally oxidizes all hydrogen sulfide in the stream to SO_2 before the gas is vented to the atmosphere. Heat recovery is provided in the hot exhaust gas of the incinerator.

4.11 Flare

The process design provides for diverting syngas from the combustion turbine to a flare. This would occur during gasification plant startup, shutdown and during short-term upset periods when the turbine is unable to accept the syngas. The flare includes a natural gas fired pilot flame to ensure that the flare is continually operable.

V. SUPPORTING FACILITIES IN THE COAL GASIFICATION PROCESS

Supporting facilities for the coal gasification plant include a cooling water system, wastewater management systems, instrument air systems, and ancillary buildings.

5.1 Cooling Water System

Destec's gasification plant uses a separate cooling water system, independent of the PSI system. The Destec system transfers heat from the plant equipment and process coolers to the atmosphere via a cooling tower.

The gasification plant's cooling water system's major components consist of a cooling tower and circulating water pumps. All plant cooling requirements are provided via a piping loop running both underground and in the pipe rack. The gasification plant cooling tower is a multi-cell mechanical draft tower, sized to provide the maximum required heat rejection for any startup or transient conditions at the ambient conditions corresponding to the maximum summer temperature. Cooling tower blowdown discharges to the new process wastewater pond which, in turn, discharges to the Station's existing ash pond system.

Chemical treatment systems, including metering pumps, storage tanks and unloading facilities provide the necessary biocide, pH treatment and corrosion inhibiting chemicals for the circulating water systems.

5.2 Wastewater Management Systems

Process wastewater includes treated, unrecycled coal slurry water, oxygen unit condensate, cooling tower blowdown, flushes and purges from equipment maintenance, filtered water from the ammonia stripper column, clarifier blowdown, coalpile runoff, and treated domestic sewage. These effluent streams are analyzed and treated and/or recycled until they meet permitted outfall specifications for discharge.

Stormwater from the non-process gasification area will be collected in a new Project stormwater pond before flowing via natural drainage to the Wabash River.

5.3 Instrument Air Systems

A separate instrument air system serves the needs of the gasification plant area. Major components of the system include air compressors, storage vessels, and air drying equipment. A cross-tie provides linkage with the PSI combined cycle power unit header.

5.4 Buildings

The gasification area includes one major building housing the gasification plant control room, office, training, and other administrative areas, and a warehouse/maintenance area. The building is heated and air conditioned to provide a climate controlled area for personnel and electrical control equipment.

The control room area contains the primary control system computers for monitoring and controlling the gasification plant along with other systems for monitoring and tabulating emissions and production data. This building contains offices for plant administration and supervision personnel, a safety and training center, conference rooms, and break rooms.

The warehouse area includes a large enclosed area for small parts storage and another area with large forklift-accessible racks for larger spares, components, and other supplies. The maintenance area has a machine shop, an instrument shop, maintenance personnel offices, space for minor equipment repair, a gantry crane, and other support facilities. This warehouse/maintenance area is heated, ventilated, and equipped with automatic fire sprinklers for fire protection in appropriate areas.

Bulk items such as lubricants, resins and chemicals are stored outdoors in a fenced area.

Several other areas are enclosed in buildings for equipment protection, freeze protection, and enclosure of maintenance areas. These include the slurry prep and pump areas, the water handling facilities, the slag dewatering area, and the instrument control area.

VI. DESCRIPTION OF SUBSYSTEMS IN THE AIR SEPARATION UNIT

The Air Separation Unit (the ASU) consists of several subsystems and major pieces of equipment, including the air compressor, air cooling system, the air purification system, the cold box, and the product handling and backup system. Each of these subsystems is briefly discussed below.

6.1 Air Compression

Atmospheric air is drawn through an inlet air filter to remove particulate matter and compressed in a centrifugal compressor. The compression occurs in stages with cooling of the air in water cooled heat exchangers between each stage.

6.2 Air Cooling

A shell and tube aftercooler is used for air pre-cooling in order to avoid direct contact between the process air and the gasification system cooling water. The aftercooler is followed by a direct contact single stage water wash tower using clarified water in a partially open loop chilled by nitrogen. The chiller loop requires little or no makeup water. All clarified makeup water fed to the chiller tower leaves the loop as overflow from the water wash tower. It is then available for cooling tower makeup. Mechanical refrigeration is not required as there is enough chilling provided by the dry nitrogen.

6.3 Air Purification

An adsorption type purification system removes water and carbon dioxide from the air feed. It is a two bottle, two bed system containing alumina and molecular sieve adsorbent. The beds are arranged as vertical concentric cylinders held within grids. This design is very compact and allows the use of only two vertical vessels instead of multiple vessels or long horizontal vessels. By means of a set of automatically controlled switching valves, the compressed air passes alternately through one bottle or the other. Moisture, carbon dioxide, and most other impurities are removed by adsorption. At the end of each period, the air is switched and the bottle containing the adsorbed impurities is regenerated by heating and purging with waste nitrogen. The sequence is such that once the desired temperature is reached, heating is stopped and the bottle is cooled back down ready for the next cycle.

Refrigeration is provided with a compressor/expander which takes a slip stream of air, compresses it, sends it to the main exchanger for cooling, and then expands the air for subcooling prior to admission to the high pressure column.

6.4 Cold Box

The compressed and purified air enters the ASU "cold box", an enclosed steel structure containing the cryogenic equipment and piping. This cold box is filled with insulating material. The air first enters the main exchangers where it is cooled to nearly liquefaction temperature by exchanging heat with out-flowing product and waste streams. It then enters the bottom of the high pressure column as feed. The principal functions of this column are to 1) provide nitrogen

at the top as reflux for the high and low pressure columns, and 2) provide a oxygen-rich liquid at the bottom as feed for the low pressure column.

Reflux for the high pressure column and the low pressure column is provided by the main vaporizer, which by vaporizing liquid oxygen in the sump of the low pressure column, condenses nitrogen rising from the high pressure column.

Oxygen-rich liquid from the sump of the high pressure column is withdrawn and, after subcooling, is expanded into the low pressure column as feed.

The final separation of air takes place in the low pressure column. The low pressure column operates with boil up from the main vaporizer. Oxygen-rich liquid feed and liquid nitrogen refluxes are provided by the high pressure column. Waste nitrogen is withdrawn from the top of the low pressure column and heated in the liquid subcooler before leaving the unit via the main exchangers.

Liquid oxygen from the bottom of the sump of the low pressure column is continuously pumped through a liquid oxygen filter and to a vaporizer. It is then warmed to ambient temperature in the main heat exchangers and passed out of the plant to the product compressor suction line.

The liquid oxygen filter is provided as an additional safety precaution. The filter is filled with adsorbent to remove remaining hydrocarbons not adsorbed in the air purification system and is periodically reactivated according to the atmospheric contaminant level. This filter serves to reduce the concentration of hydrocarbons in the vaporizer and to attenuate any peaks of hydrocarbons caused by transient emissions into the atmosphere.

Liquid nitrogen is continuously withdrawn from the high pressure column and flows to an external storage tank. A portion of the stream remains in the tank as net liquid nitrogen product. The remainder is pumped from the storage tank at approximately 600 psia and delivered to the cold box where it is vaporized and warmed to ambient temperature in the main heat exchangers. The nitrogen stream leaves the cold box as gaseous nitrogen product at 550 psia. Gaseous nitrogen compression is not required.

6.5 Product Handling and Backup System

Gaseous oxygen leaves the cold box at moderate pressure and is then compressed in a centrifugal compressor and delivered to the gasifier.

A liquid nitrogen tank with a steam vaporizer is provided to meet peak demands for gaseous nitrogen. This tanks also serves as a transfer/buffer vessel for normal gaseous production as described above.

During normal operation, liquid nitrogen from the cold box flows to the tank at a rate of 88 ST/D which covers both the net liquid production (3 ST/D which accumulates in the tank) and the normal gaseous nitrogen requirement (85 ST/D). When nitrogen demand increases, the pumping system automatically delivers up to 115 ST/D to the steam vaporizer. This vaporized nitrogen joins the normal gaseous product to provide for up to a total of 200 ST/D. A standby pump with immediate, automatic switchover ensures system reliability.

When demand for nitrogen is less than 85 ST/D, the excess is automatically vented. If continuous demand is always less than 85 ST/D, then the nitrogen flow rate controller may be set lower to reduce consumption. The Plant can produce up to 30 ST/D of net liquid nitrogen for refilling of the storage tank.

VII. DESCRIPTION OF SUBSYSTEMS IN THE COMBINED CYCLE POWER UNIT

The major components of the combined-cycle power unit include the gas turbine, heat recovery steam generator, the steam turbine, and numerous supporting facilities, including the power delivery system, feedwater demineralizer system, cooling water system, wastewater management systems, fire and service water systems, instrument air systems, and ancillary buildings.

7.1 Gas Turbine

The gas turbine (GT) is a General Electric 7FA, nominal 192 MW unit. For NO_x emissions control, the GT utilizes fuel moisturization and steam injection. Combustion exhaust gases are routed to the HRSG. Number 2 fuel oil will be used as back-up fuel for the gas turbine startup, shutdown, and short duration transients in syngas supply. The fuel oil tank is located in the Station's existing north-gate area.

7.2 Heat Recovery Steam Generator

The heat recovery steam generator (HRSG) receives GT exhaust gases and generator steam at the main steam and reheat steam energy levels. It generates HP steam and provides condensate heating for both the combined cycle and the gasification facility.

The HRSG is specifically designed for high operating efficiency and configured to employ a horizontal gas flow through a series of vertical heat transfer modules. Design of the HRSG has been optimized based on a GT fired with syngas.

The HRSG boiler includes a steam drum for proper steam purity and to reduce surge during cold start. Large down comers assure proper circulation in each of the banks. Heat transfer surface is of the extended surface type, with a serrated fin design with continuous high frequency welding to the generating tubes for all other sections. All pressure parts are fully drainable and ventable. The boiler includes internally lined gas ductwork and casing. The ductwork and boiler casing is designed using proven methods for positive pressure heat recovery boilers to maintain low outer-face temperatures and low thermal expansion. A complete set of instrument connections for monitoring water, steam, gas pressures and temperatures has been provided. A system of platforms, stairways, and ladders provide access to valves, instrumentation, and test ports. Access for inspection and maintenance is provided by suitably located horizontal-hinged access doors in the casing and ductwork.

7.3 Repowered Steam Turbine

The Wabash River Station Unit #1 steam turbine (located in the Station's enclosed powerhouse) was originally supplied by Westinghouse and went into commercial operation in 1953 at a nominal rating of 99 MW. The turbine was designed for reheat operation with five levels of extraction steam used to perform feedwater heating.

In the repowered configuration, the gasification facility and the HRSG is capable of providing 763,800 lb/hr of main steam flow and 616,600 lb/hr of hot reheat steam flow. To maximize efficiency, the feedwater heating in the repowered configuration is conducted in both the HRSG

and the gasification plant. Cold condensate from the steam turbine condenser is preheated in the gasifier area to about 180°F and heated further in the HRSG before entering the DA. Therefore, the need for extraction steam from the steam turbine is eliminated and steam that would otherwise have been extracted is now passed through the turbine to increase generator output to 104 MW. To achieve this, some minor modifications to the turbine steam path were installed to ensure acceptable steam path velocities. The generator and main power transformer were reused and required certain modifications as well.

7.4 Power Delivery System

The power delivery system includes the combustion turbine's generator output, at 18 kilovolts (kV), connected through a generator breaker to the main power step-up transformer. The step-up transformer is connected to the existing WRS 230kV switchyard through a newly installed buss extension.

Two auxiliary transformers are connected between the generator breaker and the step-up transformer. One supplies the power block auxiliary equipment loads at 4.16 kV. The second auxiliary transformer supplies the gasification plant loads at 13.8 kV. Emergency shutdown power requirements are supplied from a 13.8 kV tertiary winding in an existing plant transformer.

7.5 Demineralizer System

Two trains, complete with carbon filters, cation-, anion-, and mixed bed vessels and a state of the distributed control system, comprise the demineralizer system. Two operating demineralizer systems will have sufficient capacity to meet the make up water requirements of HRSG blowdown, GT steam injection, gasification plant make-up and balance of plant make-up. The demineralizer is located in a new building which includes a laboratory and motor control center. Acid and caustic storage tanks are also located in the building.

The demineralizer receives clarified and filtered Wabash River water. Demineralized water is stored in a tank prior to use. The demineralizer is regenerated, as required, using H_2SO_4 and NaOH. The regeneration waste is then neutralized and discharged into the Project's new process wastewater pond prior to discharge to the station's existing ash pond system. Additional clarified water is utilized as make-up to the gasification plant cooling tower.

7.6 Cooling Water System

PSI's power generation facility and Destec's gasification plant each use a separate, independent cooling water system. The power generation facility utilizes the Wabash River Station's existing once-through cooling water system.

7.7 Fire and Service Water Systems

The fire water system includes a loop around the principal facilities with fire hydrants located for easy access. The system loops around the GT/HRSG area, the gasification/oxygen unit areas, and the switchyard. Raw water from the Wabash River will be screened to remove debris and used

as the supply to the system. A booster pump will be used to maintain line pressure in the loop during stand-by periods. During period of high water usage, a motor driven fire pump will be used. A diesel driven firepump will be used in case of power loss.

7.8 Buildings

The powerblock area includes three major buildings: an administration/control room building, a pump building, and a building containing the water treatment equipment.

The administration/control building houses the power block control room and office areas needed for plant personnel. The primary control system computers for monitoring and control of the GT, the HRSG, and the water treatment facilities are be located in the control room area along with other systems for monitoring and tabulating emissions and production data. The building is heated and air conditioned to provide a climate controlled area for personnel and electrical control equipment.

The pump building is a pre-engineered metal building containing the boiler feedpumps, station air compressors, and fire water supply pump.

The water treatment building houses the clarifier, carbon filters, demineralizers, and associated water treatment equipment.

7.9 Stormwater handling

Stormwater will be collected in a new Project stormwater pond. This pond will intermittently discharge to a tributary which flows into the Wabash River via existing natural drainage.

VIII. DESIGN CONSIDERATIONS FOR THE HRSG

The steam turbine for the Project is a refurbished Westinghouse turbine previously fed by a conventional boiler but which remains in its original location connected to its original generator. Thus, the steam requirements of the repowered steam turbine are a function of the original characteristics of the steam turbine with modifications to accommodate the changes made during the upgrading

The design considerations[1] associated with integrating the HRSG with the steam turbine, the gas turbine, and the gasification facility include those relating to system interfaces, the superheater/reheater, the evaporator, the economizer, and the deaerator and feedwater heater.

8.1 SYSTEM FLOW INTERFACES

Since the gas turbine is configured to start up on #2 oil and then make a flying switch to syngas at about half load, accurate prediction of the off-load performance of the HRSG was vital to the successful handling of the various combinations of flows and temperatures and restrictions imposed by auxiliary systems, the gas turbine, the steam turbine, and the HRSG.

The HRSG receives exhaust gas from the firing of syngas in the gas turbine at full load and at loads as low as 50%. The gas turbine is fired with light oil during start-up only. At full load, the unit is designed to produce 733,000 pph of 1565 psia HP steam at 1010°F. The HP steam flow is produced from both the HRSG evaporator and includes the gasifier system contribution of 484,000 pph of 1655 psia saturated steam. The HP economizer receives 280°F water from a pegged deaerator external to the HRSG and supplies the gasifier plant with 703,000 pph of 1790 psia water at 560°F. An auxiliary economizer heats 118,000 pph of 405°F water to 575°F for injection into the HP steam drum. The feedwater heater raises the 80°F inlet water to 292°F for injection into the 64 psia deaerator.

8.2 SUPERHEATER/REHEATER DESIGN CONSIDERATIONS

The reheat and superheat exit temperatures requirement is 1010°F at full load because operating conditions were set by the upgraded steam turbine. The HRSG is not auxiliary fired; hence, the only heat available for producing the desired reheat and superheat exit steam temperature comes from the gas turbine exhaust gas. Thus, it was important to have a suitable HRSG inlet gas temperature to achieve the required superheater and reheater outlet steam temperatures. When firing synthetic gas, the maximum assured gas temperature is 1090°F. If the HP superheater and reheater are arranged in series, that is with the reheater following the superheater, the available temperature difference between the gas and steam would be 80°F for the superheater and about 70°F for the reheater. In normal HRSG designs, these temperature differences are at least 100°F. A further complication for the reheater is the requirement that the frictional pressure loss is limited to 2% of the incoming 419 psi steam pressure. Thus, the adding of heat transfer surface to the reheater to comply with low gas-to-fluid temperature difference is not practical. Also, due to this allowable reheat steam pressure drop, flow maldistribution can develop affecting

---

[1] The Participants gratefully acknowledge the contributions of Jack Polcer of Foster Wheeler Energy Corporation to this section.

metal temperatures and performance. The designer, therefore, had reservations in arranging the reheater and superheater in parallel.

Given the variety in potential operating modes which can be experienced by this unit, parallel arrangement creates another set of complications. For example, under normal operation, the superheater is to receive saturated steam from the syngas plant and then superheat it. However, during the course of start-up, reheat steam is not initially available. Thus, under some modes of operation, with a dry reheater in a purely parallel flow, the hot inlet gas could penetrate deep into the bank and increase cold superheater metal temperatures above their design temperature. This would also increase the evaporator gas inlet temperature. Excessively high evaporator gas inlet temperatures can result in significant steam drum level upsets and water carryover from excessive steam generation, and a generally unstable system start-up.

It was further realized that because of the tie-in of all the various systems to the HRSG (e.g., syngas plant, the steam turbine, and the gas turbine), the HRSG would need to be designed to be as flexible as practical in its system operation. Therefore, the reheater and superheater tubes are arranged in an internested fashion, whereby reheater tubes and superheater tubes alternate across the width of the unit. The gas passing across the reheater tubes is mixed with gas passing across the superheater tubes and temperature uniformity entering the next tube banks is always assured. Furthermore, the internested design acts as a parallel flow unit and maximizes the temperature difference between steam and gas for the most efficient use of surface area.

With this internested superheater reheater design, the HRSG is capable of superheating the steam produced from the HRSG evaporator, the saturated steam from the syngas plant, and the cold reheat steam, while delivering the desired steam outlet temperatures and not exceeding the low reheater friction loss.

The location of the superheater and reheater attemperators were carefully chosen to assure proper temperature control at all planned operating modes and to minimize operating tube metal temperatures.

8.3 EVAPORATOR DESIGN CONSIDERATIONS

The HP evaporator (the HPEV) had to be capable of handling the steam flow generator duty both with and without saturated steam supply from the syngas plant. For example, when no process steam is available for superheating, the gas inlet temperature is higher and the HRSG produces more steam in the HPEV. When the syngas plant steam is available, then steam drying of this process steam must be performed. Consequently, an independent dryer unit is mounted above the steam drum to handle the wet steam from the gasifier and the drier drains are routed into the steam drum.

8.4 ECONOMIZER DESIGN CONSIDERATIONS

The HP economizer (the HPEC) handles a greater flow rate of water at a higher pressure than would be required to feed the HRSG evaporator alone. The HPEC supplies hot water to the syngas plant. The cold water returned from the gasifier is then heated by an auxiliary economizer prior to its introduction into the HRSG HP steam drum. The auxiliary economizer is located in parallel with the main HP economizer and operates at lower pressure than HPEC. Since there may be times when water is not provided to the auxiliary economizer from the gasification plant,

the design had to incorporate the valving and controls to essentially convert the auxiliary economizer into part of the HP economizer. Thus, a partial economizer bypass was provided and will operate when the gasifier is at part load in order to prevent boiling in the economizer when the economizer flow rate is reduced to one-third its full load flow.

8.5 DEAERATOR/FEEDWATER HEATER DESIGN CONSIDERATIONS

The HRSG has only two pressure levels, which is unusual for such a large gas turbine. The steam/water system of the HRSG was influenced by the need to provide heated feedwater to the syngas plant and to perform superheat duty for process steam from syngas plant. These dual needs were met by combining a large feedwater heater bank with an external deaerator. Based on the unique requirements of the integrated IGCC system, the engineering consultant determined the most economical arrangement as consisting of a large feedwater heater which heats feedwater almost to the saturation temperature of the deaerator. The separate deaerator was mounted on top of the HRSG and the feedwater heater system was fitted with a full flow bypass system in order to avoid cold end corrosion during oil firing.

Appendix 1

OVERALL MATERIAL AND ENERGY BALANCE

PRELIMINARY

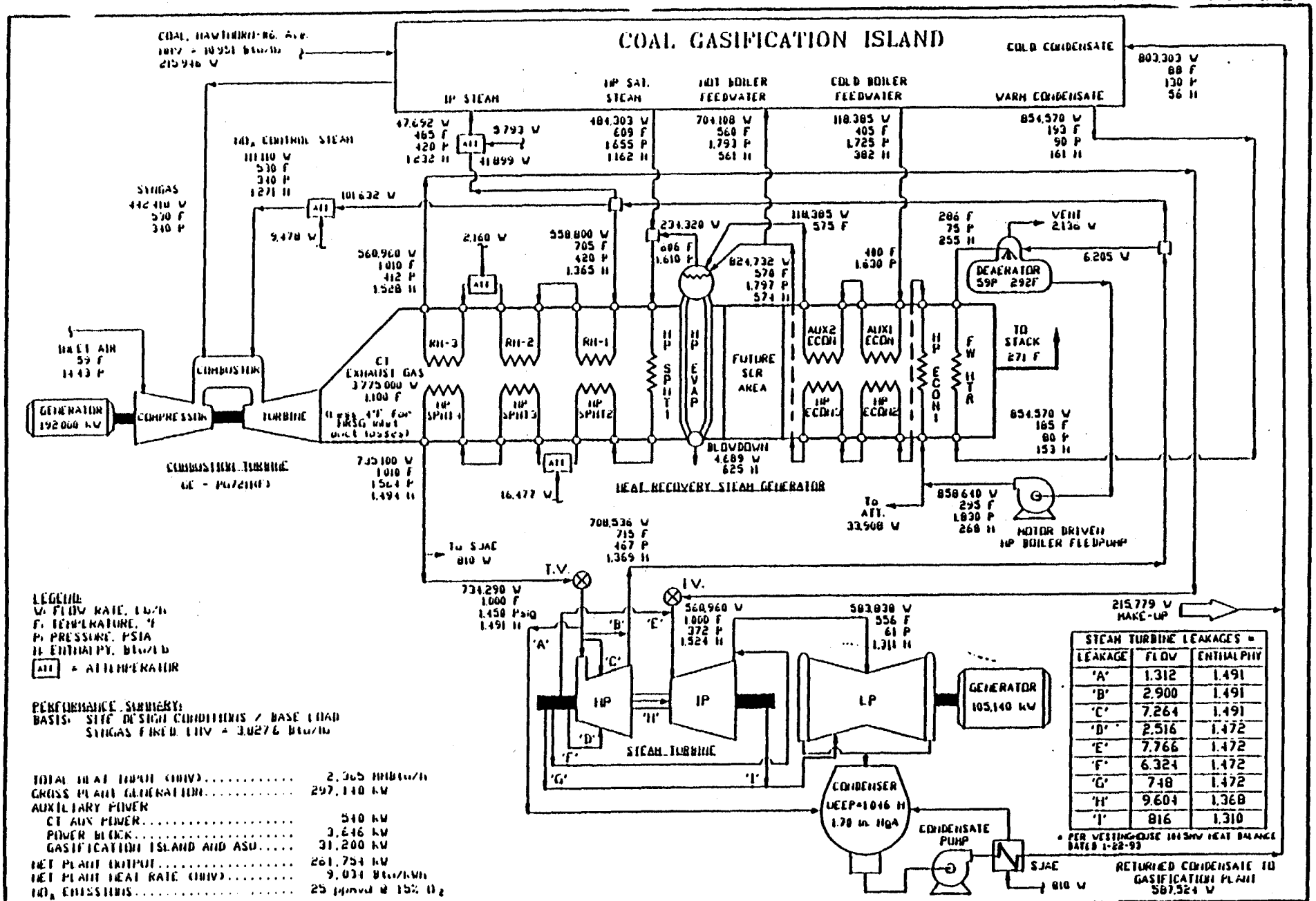

LEGEND
W: FLOW RATE, LB/H
F: TEMPERATURE, °F
P: PRESSURE, PSIA
H: ENTHALPY, BTU/LB
ATT = ATTEMPERATOR

PERFORMANCE SUMMARY:
BASIS: SITE DESIGN CONDITIONS / BASE LOAD
SYNGAS FIRED LHV = 3,0276 BTU/LB

TOTAL HEAT INPUT (HHV)	2,365 MMBTU/H
GROSS PLANT GENERATION	297,140 kW
AUXILIARY POWER	
CT AUX POWER	540 kW
POWER BLOCK	3,646 kW
GASIFICATION ISLAND AND ASU	31,200 kW
NET PLANT OUTPUT	261,754 kW
NET PLANT HEAT RATE (HHV)	9,034 BTU/kWh
NO_x EMISSIONS	25 ppmvd @ 15% O_2

STEAM TURBINE LEAKAGES *

LEAKAGE	FLOW	ENTHALPHY
'A'	1.312	1.491
'B'	2.900	1.491
'C'	7.264	1.491
'D'	2.516	1.472
'E'	7.766	1.472
'F'	6.324	1.472
'G'	748	1.472
'H'	9.604	1.368
'I'	816	1.310

* PER WESTINGHOUSE 101 SHV HEAT BALANCE DATED 1-22-93

DRAWING RELEASE RECORD

REV	DATE	PREPARED BY	REVIEWED BY	APPROVED BY	PURPOSE
E2	08-17-93	EAG			REVISED CONDENSATE FLOWS AND DA APPROACH

SCALE: NONE
PROJECT NUMBER: 8997-05

PSI - ENERGY
WEST TERRE HAUTE, INDIANA

WABASH RIVER UNIT 1 REPOWERING
WRCGRP HEAT BALANCE AND
IGCC PROCESS FLOW DIAGRAM

SARGENT & LUNDY ENGINEERS CHICAGO

DRAWING No. PSIGE7F6
REV. E2
SHEET 1 OF 1

Appendix 2

SUMMARY PROCESS BLOCK DIAGRAM

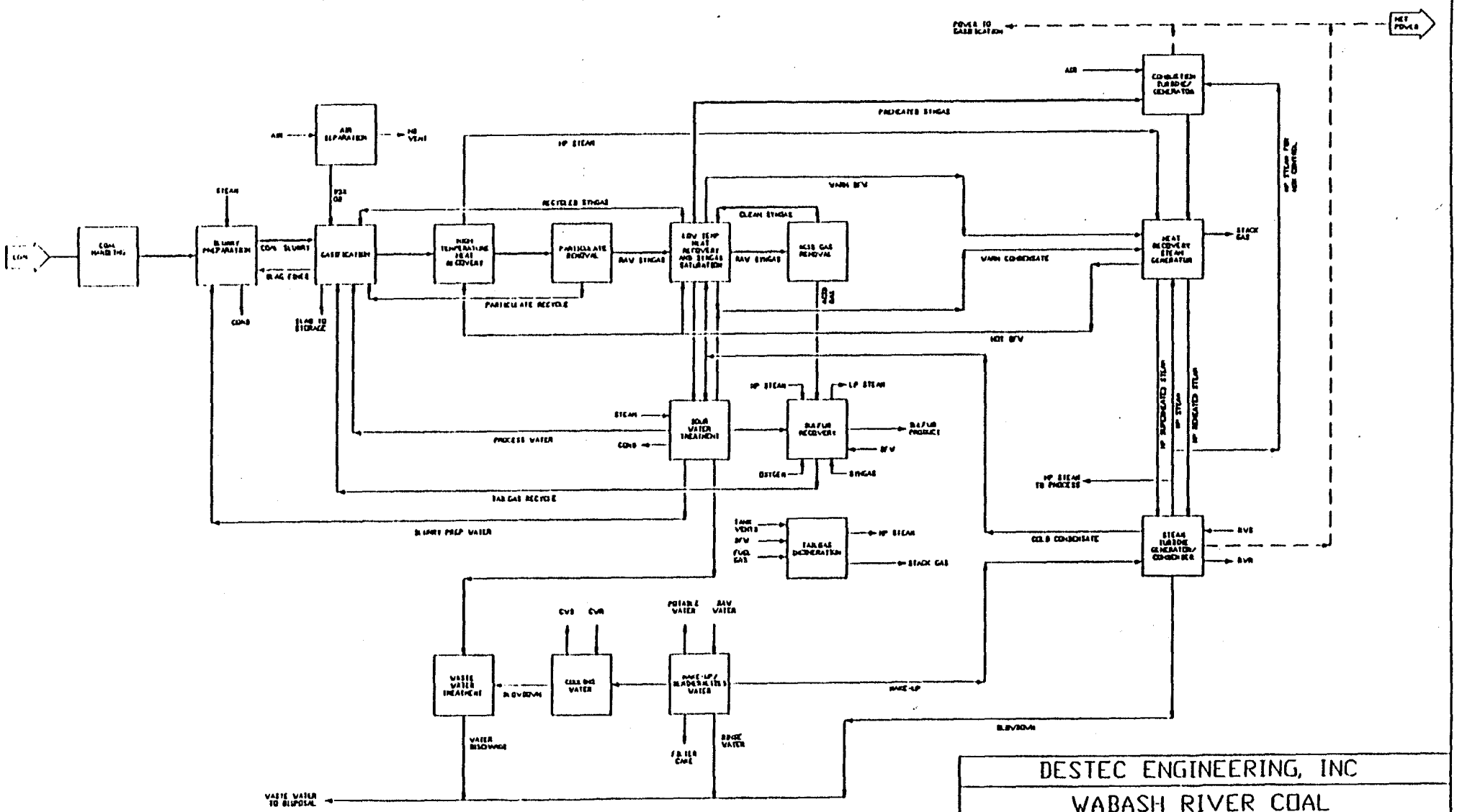

DESTEC ENGINEERING, INC

WABASH RIVER COAL GASIFICATION REPOWERING PROJECT

SUMMARY PROCESS BLOCK DIAGRAM

JUNE 1993

Appendix 3

OVERALL PLOT PLAN

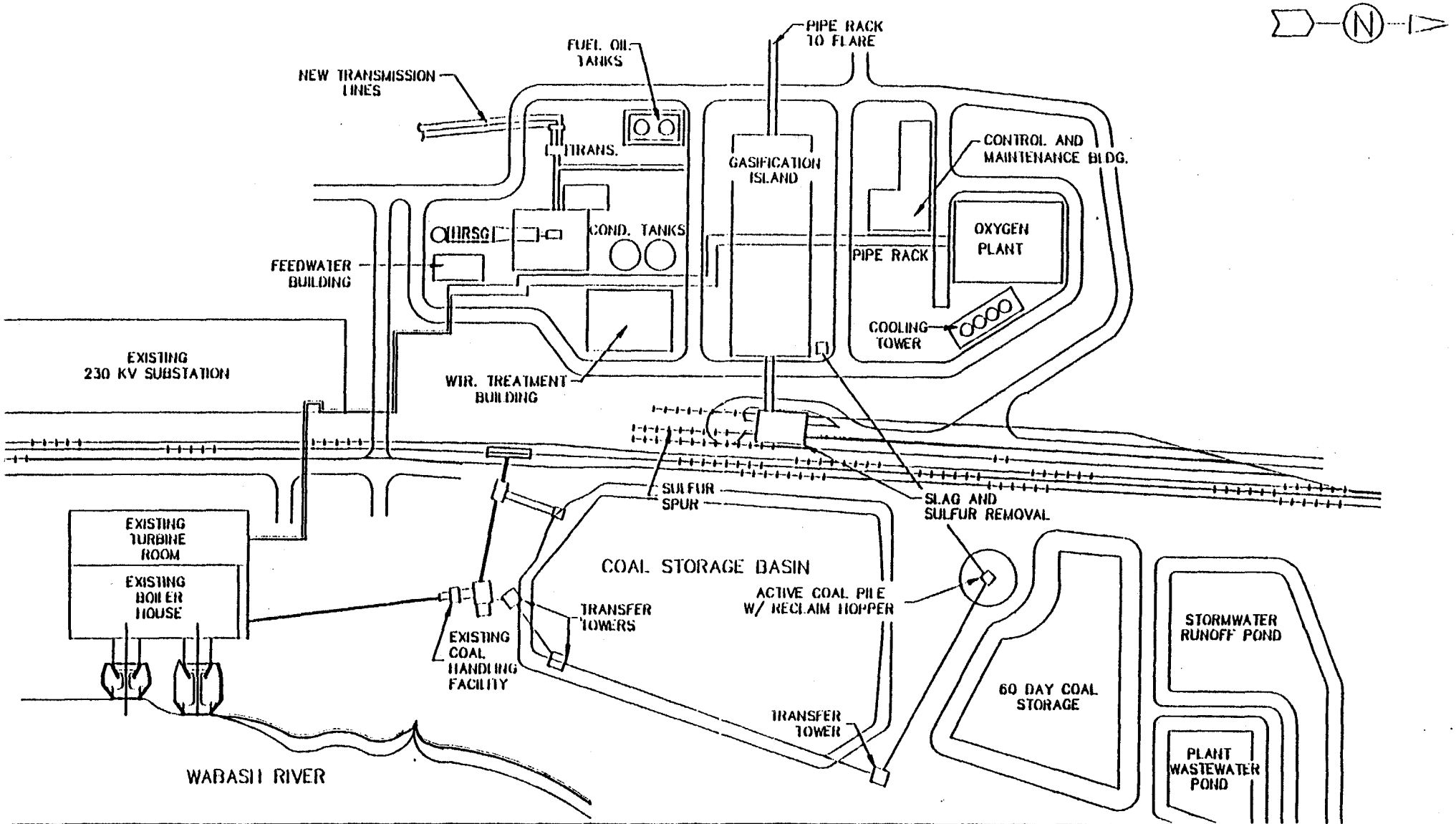

DRAWINGS

NO.	DATE	REVISION	BY	APPV.
6	7-27-93	REVISED SITE PLAN	FAR	PA
4	6-10-92	REVISED SITE PLAN	BIG	PA
3	12-12-91	RELOCATED G.T. & RESIZED DEMIN. BLD'G.	BIG	PA
2	11-26-91	REVISED LAYOUT	BIG	PA
1	11-8-91	REVISED LAYOUT	BIG	PA

SCALE: 1"=200'

DWN. FAR — DATE 3-21-91

CHK. — DATE

APPV. AMICK — DATE 5-10-91

DESTEC ENGINEERING

WABASH RIVER COAL GASIFICATION REPOWERING PROJECT SITE PLAN

PROJECT NO.: 1162

CLIENT: WRCGRP,JV

DWG. NO.: 1162-SK-5190

Appendix 4

REPRESENTATIVE ELEVATION DRAWING

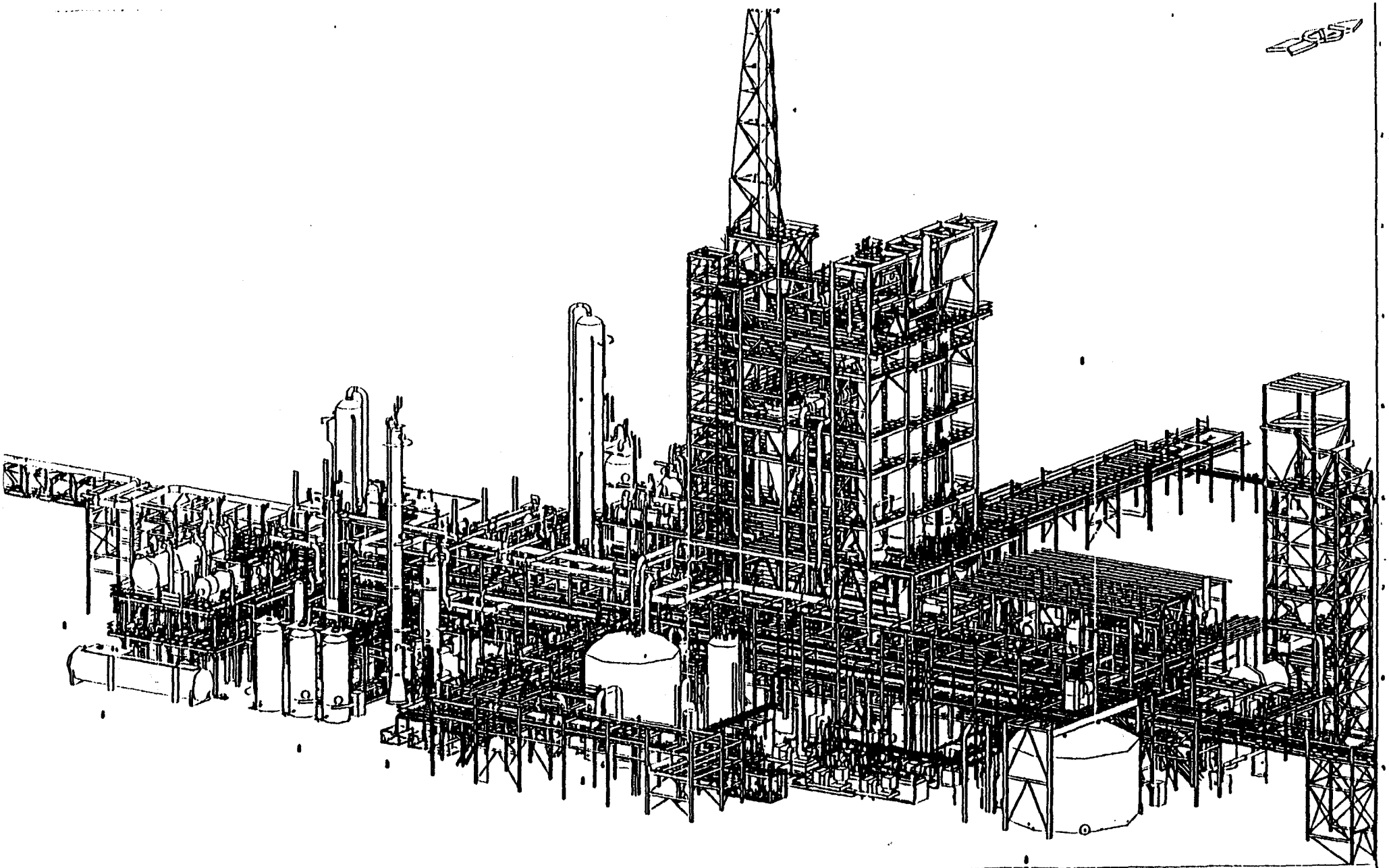

REVISION	REVISION	DRAWING ISSUE RECORD	DOW ENGINEERING COMPANY

Appendix 5

EQUIPMENT LIST

WABASH RIVER COAL GASIFICATION REPOWERING PROJECT

GASIFICATION PLANT EQUIPMENT LIST

Tag Number	Description
B-100	Weigh Belt Feeder
H-100	Coal Hopper
T-100	Recycle Water Storage
P-100 A/B	Recycle Water Pumps
G-101	Coal Rod Mill
D-101	Rod Mill Product Tank
A-101	D-101 Agitator
P-101 A/B	Rod Mill Product Pumps
T-102	Coarse Slurry Storage Tank
A-102	T-102 Agitator
P-102 A/B	Slurry Recirc Pumps
P-104	Rod Charger
T-106	Solids Recycle Tank
A-106	T-106 Agitator
P-106 A/B	Solids Recycle Pumps
P-108A/B	Rod Mill Lube Oil Pumps
P-109A/B	Lube Oil Pumps
P-110 A/B/C	R-120 Feed Pumps
E-110	Slurry Primary Heater
P-111 A/B	HR-120 Feed Pumps
E-111 A/B	Slurry Secondary Heaters
R-120 A/B	Gasification Reactors
G-120 A/B	Slag Pre-Crushers
G-121A/B	Slag Crushers

GASIFICATION PLANT EQUIPMENT LIST (CONT)

T-120	Post-Reactor Residence Vessel
PRU-120 A/B	Pressure Reduction Units
P-122A/B	Reactor Nozzle Cooling Pumps
P-125A/B	Crusher Seal Water Pumps
K-130	Syngas Recycle Compressor
D-130	Recycle Compressor K.O. Drum
T-140 A/B/C	Slag Dewatering System
P-141A/B	Slag Water Pumps
T-143	Slag Lamella
A-143	T-143 Agitator
P-143 A/B	Lamella Bottoms Pumps
T-144	Slag Recycle Water Tank
P-144 A/B	Slag Feedwater Quench Pumps
E-145	Slag Recycle Water Cooler
P-145 A/B	Slag Water Recirc Pumps
P-148A/B	Polymer Pumps
E-150	Boiler
M-155	Syngas Desuperheater
V-155 A/B	Char Filters
E-155	Nitrogen Heater
D-156	Pulse Gas Surge Drum
V-157 A/B	Secondary Char Filters
R-160 A/B	Carbonyl Reactors
D-160	Sour Water Level Control Drum
E-160	Syngas Cooler
E-161	Amine Boiler
D-161	Sour Water Level Control Drum
D-162	Sour Water Receiver
P-162 A/B	Reactor Quench Water Pumps
E-162	Sour Water Condenser

GASIFICATION PLANT EQUIPMENT LIST (CONT)

E-163	Sour Gas Condensate Condenser
E-164	Sour Gas CTW Condenser
D-164	Sour Gas Knockout Pot
V-166 A/B	Sour Water Carbon Filter
V-167 A/B	Sour Water Filter
T-170	MDEA Storage Tank
P-170 A/B	Lean Amine Pumps
C-170	Acid Gas Absorber
E-170 A/B/C	MDEA Cross Exchangers
V-170	MDEA Pre-Filter
E-171 A/B/C/D	MDEA CTW Coolers
V-171	MDEA Carbon Bed
V-172	MDEA Post-Filter
P-176	MDEA Area Sump Pump
C-180	Acid Gas Stripper
E-180 A/B	AG Stripper Recirc. Cooler
D-180	AG Stripper Reflux Drum
P-180 A/B	C-180 Quench Pumps
V-180 A/B	AG Stripper Carbon Bed
E-181	AG Stripper Reboiler
V-181 A/B	AG Stripper Ovhd Filter
P-181 A/B	Lean MDEA Transfer Pumps
D-182	AG Stripper KO Drum
P-182	Tail gas KO Pot Pump
E-182	Acid Gas Preheater
C-195	Syngas Water Saturator
E-195	Syngas Preheater
P-195 A/B	C-195 Recirc. Pumps
R-200	Acid Gas Burner Residence Vessel
B-200	Acid Gas Burner

GASIFICATION PLANT EQUIPMENT LIST (CONT)

E-200	Acid Gas Heat Recovery Boiler
D-200	Condensate Flash Drum
T-201	Sulfur Storage Tank
P-201	Sulfur Pump
R-210	Claus First Stage Reactor
R-220	Claus Second Stg. Reactor
R-230	Claus Third Stg. Reactor
E-201	Burner Sulfur Condenser
E-211	No. 2 Sulfur Condenser
E-221	No. 3 Sulfur Condenser
E-231	No. 4 Sulfur Condenser
E-210	No. 1 Gas Heater
D-210	Condensate Level Drum
E-220	No. 2 Gas Heater
E-230	No. 3 Gas Heater
R-235	Hydrogenation Reactor
E-235	Hydrogenation Gas Heater
D-235	Hydrogenation Steam Drum
YE-236	Hydrogenation Cooler
C-240	Quench Column
P-240 A/B	Quench Column Pumps
E-240	Quench Column Cooler
V-240 A/B	Quench Strainer
V-241 A/B	Quench Filter
E-242A/B	1st Stage Tail Gas Recycle Compressor Intercoolers
E-243A/B	Tail Gas Recycle Compressor Intercoolers
K-245A/B	Tail Gas Recycle Compressors
B-250	Tail Gas Burner

GASIFICATION PLANT EQUIPMENT LIST (CONT)

R-250	Tail Gas Incinerator Residence Vessel
E-250	Tail Gas Quench Cooler
STK-250	Tail Gas Dispersion Stack
D-251	Tank Vent Gas KO Pot
K-251 A/B	Tank Vent Blower
K-252 A/B	Combustion Air Blower
D-253	Tail Gas KO Drum
P-260A/B	Main Sump Pump
C-270	Condensate Degassing Column
E-270	Degassing Column Btms Cooler
P-270 A/B	Sour Water Transfer Pumps
C-271	Ammonia Stripper
E-271	Ammonia Stripper Btms Cooler
P-271 A/B	Stripped Water Transfer Pumps
C-272	Quench Column
E-272	Quench Column Bottoms Cooler
P-272 A/B	Stripped Water Transfer Pumps
E-273	Degassing Column Reboiler
E-274	Ammonia Stripper Reboiler
D-280	LP Cond. Flash Drum
P-280 A/B	LP Cond. Pump
P-283A/B	BFW Treatment Feed Pump
P-284A/B	BFW Treatment Feed Pump
D-290	Flare Knockout Drum
FL-290	Flare
P-290 A/B	Flare KO Drum Pump
T-295 A/B/C/D/E/F	Outfall Water Day Tanks
P-295 A/B	Discharge Water Pumps
V-295	Outfall Water Filter
K-300	Instrument Air Compressor

GASIFICATION PLANT EQUIPMENT LIST (CONT)

CT-310	Cooling Tower
FN-310A/B/C	Cooling Tower Fans
P-310 A/B/C	Cooling Water Pumps
P-311	Water Treatment Pump
T-326	NaOH Storage
P-326	Caustic Pump
T-330	Sulfuric Acid Tank
P-330	Sulfuric Acid Pump
P-331	Sulfuric Acid PD Pump

G:\BUSMGMT\MRW\WP94\GBU\PDREPORT\EQUIP.MRW

Appendix 6

PROJECT MILESTONE SCHEDULE

WABASH RIVER COAL GASIFICATION REPOWERING PROJECT

LIST OF PROJECT MILESTONES

AS OF JUNE 2, 1995

WBS	MILESTONE	Nov. 1992 Proj. Mgmt. Plan Original Baseline	Nov. 1993 Proj. Eval. Plan Revised Baseline	June 2, 1995 Contin. Appl'n Current Baseline	Completion Date
1.1.04	Signing of Gasification Services Agreement	06/24/92	06/24/92	06/24/92	06/24/92
1.1.05	Completion of Funding	03/15/92	11/19/92	11/19/92	11/19/92
1.1.06	Receipt of Air Permits	03/01/93	05/28/93	05/27/93	05/27/93
	Receipt of NPDES Permit Modifications	12/01/92	12/01/92	12/06/93	12/06/93
1.1.07	NEPA Completion	10/01/92	05/28/93	05/28/93	05/28/93
1.1.08	Receipt of IURC Certificate of Need	03/01/93	05/26/93	05/26/93	05/26/93
1.1.10	Project Management				
	Project Management Plan	10/31/92	12/04/92	12/04/92	12/04/92
	Financing Plan & Licensing Agreements	02/28/93	04/30/93	04/30/93	04/30/93
	Project Definition & Preliminary Plant Design	02/28/93	03/15/93	03/15/93	03/15/93
	Continuation Application	02/28/93	05/05/93	05/28/93	05/28/93
	Formal Project Review	03/15/93	03/30/93	03/30/93	03/30/93
	Draft Environmental Monitoring Plan	04/30/93	03/31/93	03/31/93	03/31/93
1.1.13	DOE Award	07/27/92	07/27/92	07/27/92	07/27/92
1.1.30	Award of EPC Subcontract for Oxygen Plant	11/15/92	12/15/92	12/15/92	12/15/92
1.2.01	Project Management				
	Environmental Monitoring Plan	06/30/93	06/30/93	07/28/93	07/28/93

WBS	MILESTONE	Nov. 1992 Proj. Mgmt. Plan Original Baseline	Nov. 1993 Proj. Eval. Plan Revised Baseline	June 2, 1995 Contin. Appl'n Current Baseline	Completion Date
	40% Completion Formal Project Review	06/30/94	06/30/94	04/05/94	04/05/94
	90% Completion Formal Project Review	04/30/95	04/30/95	03/09/95	03/09/95
	Final Public Design Report	07/31/95	01/31/95	07/01/95	
	Test Plan	05/25/95	05/25/95	07/01/95	
	Plant Startup Plan	07/31/95	07/31/95	05/25/95	05/25/95
	Continuation Application	07/31/95	01/31/95	06/02/95	06/02/95
1.2.04	Start of On-Site Dirtwork	12/01/92	06/01/93	06/01/93	06/01/93
	Release of Gasification Plant Site	09/01/93	09/10/93	09/17/93	09/17/93
1.2.05	Mobilization to Site	09/01/93	09/10/93	09/17/93	09/17/93
1.2.20	Award of High Temperature Heat Recovery Unit	11/01/92	11/03/92	11/03/92	11/03/92
	Award of Gasifier Vessels	01/10/93	01/21/93	01/21/93	01/21/93
	Jobsite Reciept of HTHRU	09/01/94	09/01/94	07/15/94	07/15/94
	Jobsite Reciept of Gasifier	07/01/94	07/01/94	05/15/94	05/15/94
1.2.22	Start of Foundation Work	09/15/93	10/08/93	10/08/93	10/08/93
	Setting of First Gasifier	09/01/94	09/01/94	06/08/94	06/08/94
	Setting of Second Gasifier	11/01/94	11/01/94	06/14/94	06/14/94
	Start of Refractory Installation	09/15/94	09/15/94	08/10/94	08/10/94
	Initial Firing with Coal	08/15/95	07/01/95	07/01/95	
	Initial Delivery of Syngas	08/15/95	07/01/95	07/01/95	
1.2.29	Completion of 100 Hour Test	10/01/95	08/15/95	08/15/95	
1.2.30	Jobsite Receipt of Main Air Compressor	09/01/94	09/01/94	07/15/94	07/15/94
	Setting of Column	08/01/94	08/01/94	03/30/94	03/30/94
	Delivery of Oxygen	07/15/95	07/01/95	06/19/95	
1.2.43	Construction Power/Water Available	09/01/93	10/06/93	10/20/93	10/20/93
1.2.50	Award of Coal Handling Subcontract	04/01/93	09/03/93	09/03/93	09/03/93
	Delivery of Coal to Syngas Facility	07/15/94	01/15/95	05/18/95	05/18/95
1.2.60	Award of STG Modification Subcontract	01/01/93	01/01/93	06/04/93	06/04/93
1.2.70	Award of Gas Turbine Generator (GTG)	01/31/92	01/31/92	01/31/92	01/31/92
	Award of Heat Recovery Steam Generator (HRSG)	10/15/92	10/15/92	10/15/92	10/15/92
	Jobsite Delivery of GTG	03/01/94	01/01/94	03/18/94	03/18/94

WBS	MILESTONE	Nov. 1992 Proj. Mgmt. Plan Original Baseline	Nov. 1993 Proj. Eval. Plan Revised Baseline	June 2, 1995 Contin. Appt'n Current Baseline	Completion Date
1.2.75	Hydrotest of HRSG	04/15/95	04/15/95	03/31/95	03/31/95
	Synchronization of GTG	05/15/95	01/15/95	06/07/95	
1.2.81	GTG Operation on Oil	01/01/95	01/01/95	06/07/95	
	GTG Operation on Syngas	05/15/95	08/15/95	08/15/95	
1.3.01	Project Management				
	Startup and Modification Report	12/01/95	12/01/95	11/01/95	
	Project Management Plan Update		not presented	11/01/95	
	Formal Project Reviews	Annual			
	Draft Final Technical Report	07/31/98	07/31/98	09/30/98	
	Technology Performance & Economic Evaluation	11/30/98	11/30/98	10/01/98	
	Final Technical Report	12/31/98	12/31/98	11/30/98	