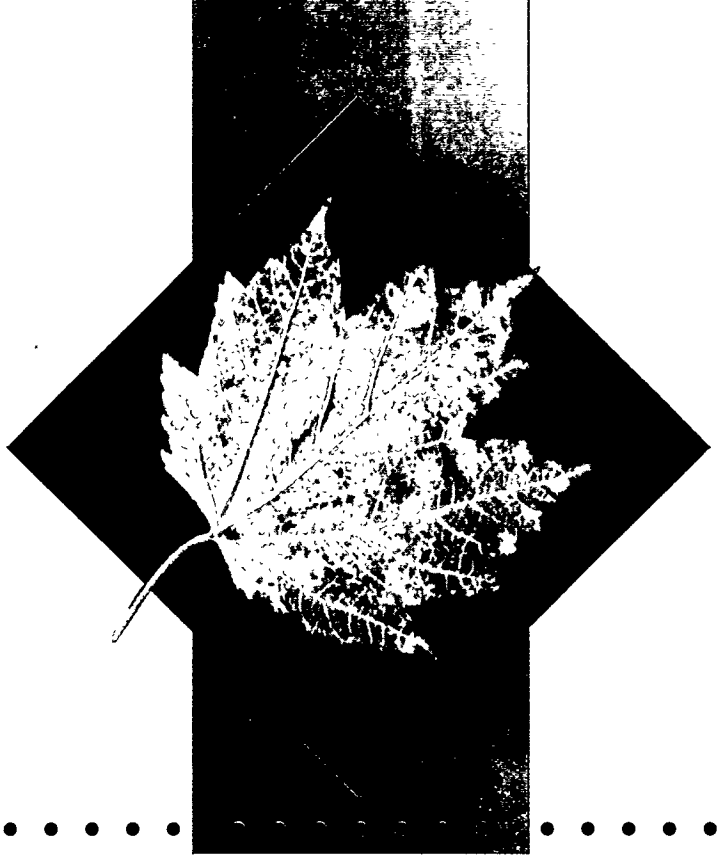

Advanced Flue Gas Desulfurization (AFGD)
Demonstration Project

Cooperative Agreement No. DE-FC22-90PC89660

Final Technical Report

Prepared by

Pure Air on the Lake
7540 Windsor Drive
Allentown, PA 18195

Prepared for

U.S. Department of Energy
Pittsburgh Energy Technology Center
P.O. Box 10940
Pittsburgh, PA 15236

MASTER

Pure Air

(16420)

DISTRIBUTION OF THIS DOCUMENT IS UNLIMITED

DOE/PC/89660--T7

M96050313

Advanced Flue Gas Desulfurization (AFGD) Demonstration Project

Cooperative Agreement No. DE-FC22-90PC89660

Final Report, Volume 2
Project Performance and Economics

30 April 1996

We have no objection from a patent standpoint to the publication or dissemination of this material.
Mark P Dowscak 7-10-96
Office of Intellectual Property Counsel
DOE Field Office, Chicago
Date

Prepared By
PURE AIR
7540 Windsor Drive
Allentown, PA 18195

Prepared For

U.S. DEPARTMENT OF ENERGY
Pittsburgh Energy Technology Center
P.O. Box 10940
Pittsburgh, PA 15236

MASTER

W3720aWCA

DISCLAIMER

Portions of this document may be illegible in electronic image products. Images are produced from the best available original document.

DISCLAIMER

This report was prepared as an account of work sponsored by an agency of the United States Government. Neither the United States Government nor any agency thereof, nor any of their employees, makes any warranty, express or implied, or assumes any legal liability or responsibility for the accuracy, completeness, or usefulness of any information, apparatus, product, or process disclosed, or represents that its use would not infringe privately owned rights. Reference herein to any specific commercial product, process, or service by trade name, trademark, manufacturer, or otherwise does not necessarily constitute or imply its endorsement, recommendation, or favoring by the United States Government or any agency thereof. The views and opinions of authors expressed herein do not necessarily state or reflect those of the United States Government or any agency thereof.

DISCLAIMER

This report was prepared by Pure Air pursuant to a cooperative agreement funded partially by the U.S. Department of Energy, and neither Pure Air nor any of its subcontractors, nor the U.S. Department of Energy, nor any person acting on behalf of either:

(a) Makes any warranty or representation, express or implied, with respect to the accuracy, completeness, or usefulness of the information contained in this report, or that the use of any information, apparatus, or process disclosed in this report may not infringe privately owned rights; or

(b) Assumes any liabilities with respect to the use of, or for damages resulting from the use of, any information, apparatus, method, or process disclosed in this report.

Reference herein to any specific commercial product, process, or service by trade name, trademark, manufacturer, or otherwise, does not necessarily constitute or imply its endorsement, recommendation, or favoring by the U.S. Department of Energy. The views and opinions of authors expressed herein do not necessarily state or reflect those of the U.S. Department of Energy.

ABSTRACT

This report details the activities performed under Cooperative Agreement No. DE-FC22-90PC89660 with the United States Department of Energy as part of the Clean Coal legislation. The purpose of this project was to demonstrate a significant reduction in SO_2 emissions coupled with reduced space requirements using an advanced flue gas desulfurization (AFGD) technology at a power generating station. In addition to the AFGD technology, the demonstration incorporated highly efficient, sophisticated plant operation and maintenance capabilities and product gypsum sales. The key features successfully demonstrated were a single 600 MWe module design that reduces costs; an adsorber design with in-situ oxidation that produces high-quality gypsum while operating with a wide range of high-sulfur coals; a contractual arrangement whereby the FGD supplier owns and operates the plant for 20 or more years; the sale of commercial-grade gypsum to a wallboard manufacturer; direct injection of powdered limestone; up to 95% SO_2 removal efficiency; use of a wastewater evaporation system that reduces wastewater disposal problems inherent in many U.S. power plants; multiple boilers feeding flue gas to a single absorber module, significantly reducing costs at power plants with multiple boiler units; and demonstration of the feasibility to produce an agglomerated physical form of gypsum that can be handled and transported with the same means as natural rock gypsum.

POINTS OF CONTACT

DOE Personnel:

Thomas A. Sarkus
P.O. Box 10940,
MS 920
Pittsburgh, PA 15236
(412) 892-5981

Karen M. Khonsari
P.O. Box 10940,
MS 920
Pittsburgh, PA 15236
(412) 892-6106

Pure Air Personnel:

Don Vymazal
7540 Windsor Dr.
Allentown, PA 18195
(610) 481-3687

John L. Henderson
P.O. Box 949
Chesterton, IN 46304
(610) 481-8274

Ghassem Manavizadeh
7540 Windsor Drive
Allentown, PA 18195
(610) 481-6278

TABLE OF CONTENTS

List of Tables		vii
List of Figures		viii
Acronyms and Definitions		x
Table of Units		xii
Unit Conversions		xiv
Glossary of Terms		xv
Executive Summary		xx
1.0	**INTRODUCTION**	1-1
1.1	Purpose of the Project Performance and Economics Report	1-1
1.2	Overview and Project	1-1
	1.2.1 Background and History of Project	1-1
	1.2.2 Project Organization	1-2
	1.2.3 Project Description	1-2
	1.2.4 Site	1-5
	1.2.5 Project Schedule	1-6
1.3	Objectives of the Project	1-8
1.4	Significance of the Project	1-8
1.5	DOE's Role in the Project	1-9
2.0	**TECHNOLOGY DESCRIPTION**	2-1
2.1	Description of the Demonstrated Technology	2-1
2.2	Description of the Demonstration Facilities	2-3
2.3	Proprietary Information	2-18
2.4	Stream Data	2-18
2.5	Process and Instrumentation Diagrams	2-19
3.0	**UPDATE OF THE PUBLIC DESIGN REPORT**	3-1
3.1	Design and Equipment Changes	3-1
3.2	Demonstration Plant Capital Cost Update	3-6
3.3	Demonstration Plant Operating Cost Update	3-9
4.0	**DEMONSTRATION PROGRAM**	4-1
4.1	Test Plans	4-1
	4.1.1 Short-term Tests	4-1
	4.1.2 Long-term Tests	4-2
4.2	Operating Procedures	4-3
	4.2.1 Instrumentation and Data Acquisition	4-3
	4.2.2 Test Methods	4-7

TABLE OF CONTENTS
(continued)

4.3	Analysis of Feed Stocks, Products and Reagents	4-7
4.4	Data Analysis Methodology	4-12
4.5	Data Summary	4-12
4.6	Operability and Reliability	4-13
	4.6.1 Critical Component Failure Analysis	4-14
	4.6.2 Critical Component Failure Discussion	4-17
	4.6.3 Major Equipment Repair History	4-29
5.0	**TECHNICAL PERFORMANCE**	5-1
5.1	Effects of Operating Variable and Correlation of Results	5-1
5.2	WES Testing	5-29
5.3	PowerChip® Gypsum	5-31
6.0	**ENVIRONMENTAL PERFORMANCE**	6-1
6.1	Impact on the Environment	6-1
6.2	Waste Streams and Their Disposal	6-3
6.3	Potential Environmental Concerns	6-5
7.0	**ECONOMICS**	7-1
7.1	Economic Parameters	7-1
7.2	Estimate of Process Capital Costs	7-2
7.3	Projected Operating and Maintenance Costs	7-4
7.4	Summary of Performance and Economics	7-5
7.5	Effect of Variables on Economics	7-6
8.0	**COMMERCIALIZATION POTENTIAL AND PLANS**	8-1
8.1	Market Analysis	8-1
	8.1.1 Applicability of the Technology	8-6
	8.1.2 Market Size	8-6
	8.1.3 Market Barriers	8-7
	8.1.4 Economic Comparison with Competing Technologies	8-7
8.2	Commercialization Plant	8-9
9.0	**CONCLUSIONS AND RECOMMENDATIONS**	9-1
9.1	Conclusions	9-1
9.2	Recommendations	9-2

TABLE OF CONTENTS
(continued)

10.0 BIBLIOGRAPHY OF OTHER PROJECT REPORTS..... 10-1

11.0 APPENDICES..... 11-1

Appendix A Process and Instrumentation Diagrams
Appendix B Revised Equipment List
Appendix C Operating Procedures for Demonstration Unit
Appendix D Pure Air Analytical Testing Program
Appendix E Data Macro Source Code
Appendix F Material Balance Spreadsheet
Appendix G Data Summary for Major Process Variables
Appendix H Major Equipment Repair History
Appendix I WES Test Data
Appendix J References

LIST OF TABLES

	Acronyms and Definitions	ix
	Table of Units	xi
	Unit Conversions	xiii
Table 3-1	Major Equipment Costs	3-6
Table 3-2	Summary of Fixed Operating Costs	3-9
Table 3-3	Variable Operating Cost	3-9
Table 4-1	Short-Term Testing Parameters	4-1
Table 4-2	Long-Term Tests	4-2
Table 4-3	Data Logger Scanned Variables	4-4
Table 4-4	Continuous Process Analyzers	4-6
Table 4-5	Coal Analysis	4-8
Table 4-6	Limestone Analysis	4-9
Table 4-7	Gypsum Analysis	4-10
Table 4-8	Fly Ash Trace Metal Analysis	4-11
Table 4-9	Critical Components Failure Analysis	4-14
Table 6-1	No AFGD in Operation	6-1
Table 6-2	AFGD in Operation	6-2
Table 7-1	Economic Parameters	7-1
Table 7-2	Major Equipment Costs	7-2
Table 7-3	Fixed and Variance Operating and Maintenance Costs	7-3
Table 7-4	Total O&M Costs	7-4
Table 7-5	Summary of Performance and Cost Data	7-5
Table 7-6	Capital Cost for an AFGD System	7-7
Table 7-7	Levelized Cost for AFGD System	7-8
Table 7-8	Present Worth of an Escalating Series Tables	7-9
Table 7-9	10.00% Per Period Compound Interest Factors	7-10

LIST OF FIGURES

Figure 1-1	AFGD Project Structure	1-2
Figure 2-1	Process Flow Diagram	2-4
Figure 2-2	Absorber Module	2-6
Figure 5-1	SO_2 Removal Performance at Bailly AFGD (100% Boiler Load). (Absorber Recirculation Rate, 2.25% Sulfur)	5-2
Figure 5-2	SO_2 Removal Performance at Bailly AFGD (67% Boiler Load)... (Absorber Recirculation Rate, 2.25% Sulfur)	5-3
Figure 5-3	SO_2 Removal Performance at Bailly AFGD (33% Boiler Load)... (Absorber Recirculation Rate, 2.25% Sulfur)	5-4
Figure 5-4	SO_2 Removal Performance at Bailly AFGD (100% Boiler Load). (Stoichiometric Ratio, 2.25% Sulfur)	5-5
Figure 5-5	SO_2 Removal Performance at Bailly AFGD (67% Boiler Load)... (Stoichiometric Ratio, 2.25% Sulfur)	5-6
Figure 5-6	SO_2 Removal Performance at Bailly AFGD (100% Boiler Load). (Stoichiometric Ratio, 2.75% Sulfur)	5-8
Figure 5-7	SO_2 Removal Performance at Bailly AFGD (67% Boiler Load)... (Absorber Recirculation Rate, 2.75%)	5-9
Figure 5-8	SO_2 Removal Performance at Bailly AFGD (33% Boiler Load)... (Absorber Recirculation Rate, 2.75%)	5-10
Figure 5-9	SO_2 Removal Performance at Bailly AFGD (100% Boiler Load). (Stoichiometric Ratio, 2.75% Sulfur)	5-11
Figure 5-10	SO_2 Removal Performance at Bailly AFGD (67% Boiler Load)... (Stoichiometric Ratio, 2.75% Sulfur)	5-12
Figure 5-11	SO_2 Removal Performance at Bailly AFGD (33% Boiler Load)... (Stoichiometric Ratio, 2.75% Sulfur)	5-13
Figure 5-12	SO_2 Removal Performance at Bailly AFGD (100% Boiler Load). (Absorber Recirculation Rate, 3.1%)	5-15
Figure 5-13	SO_2 Removal Performance at Bailly AFGD (67% Boiler Load)... (Absorber Recirculation Rate, 3.1%)	5-16
Figure 5-14	SO_2 Removal Performance at Bailly AFGD (100% Boiler Load). (Stoichiometric Ratio, 3.1% Sulfur)	5-17
Figure 5-15	SO_2 Removal Performance at Bailly AFGD (67% Boiler Load)... (Stoichiometric Ratio, 3.1% Sulfur)	5-18
Figure 5-16	SO_2 Removal Performance at Bailly AFGD (100% Boiler Load). (Percent of Design, 4% Sulfur)	5-20
Figure 5-17	SO_2 Removal Performance at Bailly AFGD (67% Boiler Load)... (Absorber Recirculation Rate, 4%)	5-21
Figure 5-18	SO_2 Removal Performance at Bailly AFGD (33% Boiler Load)... (Absorber Recirculation Rate, 4% Sulfur)	5-22
Figure 5-19	SO_2 Removal Performance at Bailly AFGD (100% Boiler Load). (Stoichiometric Ratio, 4% Sulfur)	5-23
Figure 5-20	SO_2 Removal Performance at Bailly AFGD (67% Boiler Load)... (Stoichiometric Ratio, 4% Sulfur)	5-24

LIST OF FIGURES
(continued)

Figure 5-21	SO_2 Removal Performance at Bailly AFGD (100% Boiler Load). (Absorber Recirculation Rate, 4.5% Sulfur)	5-26
Figure 5-22	SO_2 Removal Performance at Bailly AFGD (67% Boiler Load)... (Absorber Recirculation Rate, 4.5% Sulfur)	5-27
Figure 5-23	SO_2 Removal Performance at Bailly AFGD (100% Boiler Load). (Stoichiometric Ratio, 4.5% Sulfur)	5-28
Figure 5-24	Example of Flow Function Plot for PowerChip® Gypsum.....	5-35
Figure 5-25	Example of Flow Criterion Concepts for a Bulk Material ..... Element in a Cylindrical Silo	5-36
Figure 5-26	Example of Flow Function Plot for Various FGD Gypsums..... in Free Moisture Range of 7 - 15% as Filter Cake	5-37
Figure 5-27	Example of Design Requirements for a Specific Tested FGD ..... Gypsum as a Filter Cake - Not Agglomerated, Chipped or Briquetted	5-38
Figure 5-28	Example of Critical Diameters for Flow in Cylindrical Hoppers ... FGD Gypsum as a Filter Cake with Moistures from 1 - 15%	5-39
Figure 5-29	Comparison of Industrial Gypsum to Nova Scotia Natural ..... Gypsum	5-40
Figure 8-1	500 MW FGD Economics (Capital + O&M).....	8-10
Figure 8-2	Flue Gas Desulfurization Economics ..... (Allowance Value = $300/Ton)	8-11
Figure 8-3	Flue Gas Desulfurization Economics ..... (Allowance Value = $600/Ton)	8-12
Figure 8-4	Flue Gas Desulfurization Economics (2% Sulfur Fuel).....	8-13
Figure 8-5	Flue Gas Desulfurization Economics ..... (Gypsum Disposal = $8/Ton)	8-14

ACRONYMS AND DEFINITIONS

AA	-	Atomic Absorption
AFGD	-	Advanced Flue Gas Desulfurization
Air Products	-	Air Products and Chemicals, Inc.
ARS	-	Air Rotary Sparger
BFC	-	Base Facility Charge
BOP	-	Balance of Plant
Ca	-	Calcium
CEM	-	Continuous Emissions Monitoring
CI	-	Cast Iron
COTR	-	Contracting Officer Technical Reviewer
CS	-	Carbon Steel
DCAA	-	Defense Contract Audit Agency
DI	-	Ductile Iron
DOE	-	U.S. Department of Energy
DCS	-	Distributed Control System
EES	-	Air Products Environmental Energy Systems Division
EHSS	-	Environmental, Health, Safety, and Socioeconomic Aspects
EMP	-	Environmental Monitoring Plan
EMPO	-	Environmental Monitoring Plan Outline
EPA	-	U.S. Environmental Protection Agency
EPRI	-	Electric Power Research Institute
ESP	-	Electrostatic Precipitator
FAS	-	Fixed Air Sparger
FGD	-	Flue Gas Desulfurization
Hg	-	Mercury
I&C	-	Instrumentation and Control
ISBL	-	Inside Battery Limits
FIC	-	Flow Indicating Controller
kW	-	KiloWatt
L/G	-	Liquid to Gas Ratio
LHV	-	Lower Heating Value
MHIA	-	Mitsubishi Heavy Industries America
MW	-	Megwatt
Ni	-	Nickel
NI	-	Northern Indiana Public Service Company
NIPSCO	-	Northern Indiana Public Service Company
NPDES	-	National Pollution Discharge Elimination System
NSPS	-	New Source Performance Standards
OA	-	Operating Agreement
O&M	-	Operating and Maintenance
OSBL	-	Outside Battery Limits
PAL	-	Pure Air on the Lake
PCFB	-	Pressurized Circulating Fluidized Bed
PC	-	Pulverized Coal

ACRONYMS AND DEFINITIONS
(continued)

PFBC	-	Pressurized Fluidized Bed Combustor
PDR	-	Public Design Report
PFD	-	Process Flow Diagram
P&ID	-	Piping and Instrumentation Diagram
PON	-	Program Opportunity Notice
PSD	-	Prevention of Significant Deterioration
PSG	-	Air Products Process Systems Group
PURPA	-	Public Utilities Regulatory Policies Act
QA/QC	-	Quality Assurance/Quality Control
RCRA	-	Resource Conservation Recovery Act
RFQ	-	Request for Quotation
SNCR	-	Selective Non-Catalytic NOx Reduction
SOW	-	Statement of Work
SS	-	Stainless Steel
TDH	-	Total Dynamic Head
TDS	-	Total Dissolved Solids
TSP	-	Total Suspended Particulates
TSS	-	Total Suspended Solids
TVA	-	Tennessee Valley Authority
USG	-	United States Gypsum
U.K.	-	United Kingdom
U.S.	-	United States
WBS	-	Work Breakdown Structure
WEC	-	Westinghouse Electric Corporation
WES	-	Waste Evaporation System
WWTP	-	Wastewater Treatment Plant

TABLE OF UNITS

$	-	U.S. Dollars
%	-	Percent
acf	-	Actual cubic feet
acfh	-	Actual cubic feet per hour
acfm	-	Actual cubic feet per minute
atm	-	Atmosphere(s)
bbl	-	Barrel
bhp	-	Brake horsepower
Btu	-	British thermal units
cfs-day	-	Cubic feet per second in a 24-hour day
cm^3	-	Cubic centimeters
cm	-	Centimeters
cp	-	Centipoise
cu	-	Cubic
DM	-	Deutschmarks
°C	-	Degrees Celsius
°F	-	Degrees Fahrenheit
fpm	-	Feet per minute
ft	-	Feet
gal	-	Gallons
g-mol	-	Gram-moles
gph	-	Gallons per hour
gpm	-	Gallons per minute
hp	-	Horsepower
hr	-	Hours
in	-	Inches
kg	-	Kilograms
kcal	-	Kilocalorie
kPa	-	Kilopascals
kW	-	Kilowatts
kWhr	-	Kilowatt-hours
l	-	Liters
lb	-	Pounds
lb/hr	-	Pounds per hour
lb-mole	-	Pound mole
long ton	-	2,200 lb
LTPD	-	Long tons per day
M	-	Thousand
m^3	-	Cubic meters
mg	-	Milligrams
min	-	Minutes
ml	-	Milliliters
mm	-	Millimeters

TABLE OF UNITS
(continued)

MM	-	Million
mol%	-	Mole percent
mPa	-	Megapascals
MWe	-	Megawatts electric
MWt	-	Megawatts thermal
N	-	Normal
Nm^3	-	Normal cubic meter
ppb	-	Parts per billion, by volume (v) for gas, by weight (w) for liquid
ppm	-	Parts per million, by volume (v) for gas, by weight (w) for liquid or solid
psia	-	Pounds per square inch absolute
psid	-	Pounds per square inch differential
psig	-	Pounds per square inch gauge
s	-	Seconds
scf	-	Standard cubic feet
scfd	-	Standard cubic feet per day
scfh	-	Standard cubic feet per hour
scfm	-	Standard cubic feet per minute
sq	-	Square
TPD	-	Short tons per day
TPH	-	Tons per hour
tons	-	Short tons (2,000 lb)
vol%	-	Volume percent
W.C	-	Water column
wt%	-	Weight percent

UNIT CONVERSIONS

FROM	TO	MULTIPLY	FROM	TO	MULTIPLY	
ft	m	0.3048	m	ft	3.281	
in	mm	25.4	mm	in	0.039	
ft^2	m^2	0.0929	m^2	ft^2	10.76	
acf	m^3	0.02832	m^3	acf	35.31	
scf	Nm^3	0.02679	Nm^3	scf	37.33	60°F
		0.02629			38.04	70°F
scfm	Nm^3/hr	1.607	Nm^3/hr	scfm	0.6221	60°F
		1.577			0.6341	70°F
lb	kg	0.4536	kg	lb	2.204	
long ton (UK)	ton	1.016	ton	long ton (UK)	0.9842	
short ton (vS)	ton	0.9072	ton	short ton(vS)	1.1032	
lb/ft^3	kg/m^3	16.018	kg/m^3	Ib/ft^3	0.06243	
lb/in^2	kg/cm^2	0.07031	kg/cm^2	Ib/in^2	14.22	
gal (US)	l	3.785	l	gal (US)	0.2642	
gpm	m^3/hr	0.2271	m^3/hr	gpm	4.403	
hp (US, UK)	kW	0.746	kW	hp (US, UK)	1. 34	
PS (FR)	kW	0.7355	kW	PS (FR)	1. 35	
Btu/hr	kcal/hr	0.252	kcal/hr	Btu/hr	3.968	
Btu/ft^2hr °F	$kcal/m^2hr$ °C	4.882	$kcal/m^2hr$ °C	Btu/ft^2hr °F	0.204	
Btu/fthr °F	cal/mhr °C	1.488	kcal/mhr°C	Btu/fthr °F	0.67	
Btu/lb	kcal/kg	0.556	kcal/kg	Btu/lb	1.8	
$gal/10^3$ scf	$1/Nm^3$	0.1407	$1/Nm^3$	$gal/10^3$ scf	7.11	
grains/acf	g/m^3	2.288	g/m^3	grains/acf	0.43	

GLOSSARY OF TERMS

Absorbance - a measure of optical density; results from interception of light by particulate matter suspended in a liquid sample.

Accuracy - degree of conformity of a measurement to a standard or a true value; agreement between a measured value and the true value; includes effects of both random error (precision) and systematic error (bias).

Activity - a quantity replacing actual molar concentration in mathematical expressions for the equilibrium constant so as to eliminate the effect of concentration on the equilibrium constant. The apparent or effective concentration of a substance in a non-ideal system (such as an aqueous solution).

Activity coefficient - a fractional number which, when multiplied by the molar concentration of a substance in solution, yields the chemical activity. This term indicates the amount of interaction between molecules at higher concentrations.

Agglomeration - a process of contacting several particles of smaller physical size using pressure forces to form a combination thereof held together by cohesive forces, chemical bonding or electrostatic forces.

Alkalinity - a performance indicator describing the capacity of an alkaline scrubbing liquor to remove acidic SO_2 from flue gas by absorption and neutralization. Calculated by the Species Distribution Model as the amount of SO_2 that could be absorbed without exceeding an SO_2 vapor pressure over the solution of 100 ppm SO_2. Also calculated as the sum of activities of ions and ion pairs for all species more alkaline than bisulfite ion.

Anhydrous - free from water, especially water of crystallization.

Anion - a negatively charged ion.

Average particle size - a characteristic value, usually the diameter, of a particle that is taken to be the best single value representative of the whole size distribution.

Blank - a sample containing only reagents and deionized water, which is carried through an analytical procedure as if it were an unknown. The purpose of analyzing a blank is to determine a correction to be applied to the results of analysis of an unknown.

Blinding - condition in which sieve openings are effectively plugged, allowing no openings for particle passage. Or, precipitation of one substance on the surface of a particle of another substance.

GLOSSARY OF TERMS
(continued)

Buffer capacity - The quantity of acid or base that can be added to a solution to produce a specified change in pH; the number of millimoles of strong acid or base required to cause a specific decrease in the pH of a fixed volume of solution.

Calcite - a mineral $CaCO_3$ consisting of calcium carbonate crystallized in hexagonal form. Includes common limestone, chalk, and marble.

Calibrate - to standardize by determining the deviation from a standard so that a proper correction factor can be applied.

Calibration curve or line - a curve or line produced by plotting known concentrations in standard solutions versus measured instrument responses on the horizontal and vertical axes of a coordinate system.

Cation - positively charged ion.

Chelation - combining with a metal to form a ring structure containing the metal held by coordination bonds.

Coagulant - agent added to a slurry to promote particle agglomeration and to cause precipitation from a dispersed state of suspended particles. The larger the mass (or particle), the faster it will settle. Coagulants are added to promote rapid settling (see flocculant).

Conductivity - the quality or power of transmitting heat, light, sound, or electricity.

Co-precipitation - precipitation from solution of more than one species at the same time. Used in analytical chemistry to describe the processes of occlusion, solid solution formation, blinding and simultaneous separate crystallization of two species.

Correlation coefficient - a quantitative measure of the linear relationship between two variables, x and y, or an independent variable and a dependent variable.

Decant - to draw off liquid without disturbing the sediment or the lower liquid layers.

Effluent - a substance that flows out or is discharged.

Hydrated lime - slaked lime, lime treated with water. Commercial material is usually at least 95 percent calcium hydroxide.

Indicator - a supplementary substance that exhibits a change in color as a result of concentration changes occurring near the titration end point.

GLOSSARY OF TERMS
(continued)

Individual particles - the smallest discrete units. Particles may be single crystals, polycrystalline particles, liquid droplets, or amorphous materials.

Inerts - acid insoluble or unreactive portion of a dissolved solid.

L/G - ratio of alkaline slurry or liquor flow rate to the absorber divided by flue gas flow rate to the absorber in an FGD system. Calculated from absorber recycle rate divided by flue gas flow rate at scrubber outlet conditions and expressed in units of gallons per 10^3 actual cubic feet.

Loss on ignition - the loss in weight expressed as the percent of the initial "as received" sample weight, obtained after ignition of a sample at 1000°C to a constant weight.

Molality - number of gram-moles of an ion or chemical species in one kilogram of solvent. The abbreviation for molality is m.

Molarity - number of gram-moles of an ion or chemical species in one liter of solution. The abbreviation for molarity is M.

Morphology - structure or form.

NBS - National Bureau of Standards.

Normality - number of gram equivalents of an ion or chemical species in one liter of solution. The abbreviation for normality is N.

Occlusion - the inclusion or adsorption of one material trapped during solidification of another.

Oxidation - the removal or loss of one or more electrons from an atom, ion, or molecule.

Parameter - a variable or an arbitrary constant appearing in a mathematical expression, each value of which restricts or determines the specific form of the expression.

Plugging - condition in which FGD system slurry solids block the path of gas flow through mist eliminator or slurry flow through spray nozzles.

PowerChip® gypsum - a registered trademark of Pure Air which describes a unique physical form of FGD gypsum and which appears as a thick flake and performs a flow function similar to natural rock gypsum.

GLOSSARY OF TERMS
(continued)

Precipitate - a solid substance separated from a solution or suspension by chemical or physical change.

Quicklime (CaO) - the first solid product obtained by calcining (kiln-roasting) limestone to drive off carbon dioxide. Contains calcium oxide or calcium oxide in association with magnesium oxide and is capable of reaction with water to form the hydroxide.

Reagent Ratio - a performance indicator describing the amount of lime or limestone used in FGD systems. Calculated as the molar ratio of calcium feed rate to sulfur removed from wet scrubbing FGD systems. This term is used interchangeably with stoichiometric ratio.

Reagent utilization - a performance indicator describing the amount of excess lime or limestone present in slurries from FGD systems. Calculated as the molar ratio of total sulfur removed (sulfite plus sulfate) to calcium in reaction products from wet scrubbing processes. The inverse of reagent utilization is called reagent ratio (or stoichiometric ratio).

Reduction - process in which an atom, ion, or molecule gains one or more electrons.

Relative saturation - a performance indicator describing the tendency for a solid to dissolve in or precipitate from a solution. Calculated as the product of activities of the component ions divided by the solubility product constant of the solid. When relative saturation is greater than one, the solution is supersaturated; less than one, sub-saturated.

Residue - acid insoluble portion, or the salts remaining after evaporation of a solution.

Saturated - most concentrated solution that can persist in the presence of an excess of the dissolved substance.

Scaling - accumulation by precipitation of gypsum or calcium sulfite solids on FGD system equipment surfaces (mist eliminator blades, scrubber internals, vessel walls, piping, or monitoring probes).

Sludge - precipitated solid matter resulting from flue gas desulfurization processes.

Solid solution - a homogeneous phase formed from two substances by direct substitution of one ion for another in the crystal lattice of an ionic compound not containing that ion.

GLOSSARY OF TERMS
(continued)

Stoichiometric ratio - is defined as the moles of calcium feed divided by the moles of SO_2 removed in the scrubber. This term is used interchangeably with reagent ratio. The inverse of stoichiometric ratio is called reagent utilization.

Supersaturated - beyond saturation, made possible by temperature or pressure differential.

Suspended solids - particles carried by a liquid medium; in flue gas desulfurization systems, the solid portion of a slurry containing lime or limestone and reaction products.

Thickener - process unit used to separate suspended particles from slurry liquid by settling. The unit is also referred to as a clarifier, and the process is also known as dewatering.

Thixotropic - describes the property of a gel (or dewatered slurry) of becoming fluid when disturbed (as by shaking).

Titration - a process for determining the amount of a substance by measuring the volume of a reagent required to react completely with a known volume of sample containing that substance.

Viscosity - the property of a fluid or semifluid that enables it to offer continued resistance to flow.

Volumetric - involving the accurate measurement of volume through the use of calibrated glass vessels (flasks and pipettes).

EXECUTIVE SUMMARY

Project Objective:

To demonstrate removal of 90-95% or more of the SO_2 at approximately one-half the cost of conventional scrubbing technology; and to demonstrate significant reduction of space requirements.

Technology/Project Description:

In this project, Pure Air has built a single SO_2 absorber for a 528-MWe power plant. Although this was the largest capacity absorber module in the United States, it has relatively modest space requirements because no spare or backup absorber modules are required. The absorber performs three functions in a single vessel: prequencher, absorber, and oxidation of sludge to gypsum. Additionally, the absorber is of a co-current design, in which the flue gas and scrubbing slurry move in the same direction and at a relatively high velocity compared to conventional scrubbers. These features all combine to yield a state-of-the-art SO_2 absorber that is more compact and less expensive than conventional scrubbers.

The project incorporated a number of technical features including the injection of pulverized limestone directly into the absorber, a device called an air rotary sparger located within the base of the absorber, and a novel wastewater evaporation system. The air rotary sparger combines the functions of agitation and air distribution into one piece of equipment to facilitate the oxidation of calcium sulfite to gypsum. Additionally, wastewater treatment is being demonstrated to minimize water disposal problems inherent in many high-chloride coals.

Bituminous coals primarily from the Indiana, Illinois coal basin containing 2-4.5% sulfur were tested during the demonstration. The Advanced Flue Gas Desulfurization (AFGD) process has demonstrated removal of 95% or more of the SO_2 while providing a commercial gypsum by-product in lieu of solid waste. A portion of the commercial gypsum is being agglomerated into a product known as PowerChip® gypsum which exhibits improved physical properties, easier flowability and more user friendly handling characteristics to enhance its transportation and marketability to gypsum end-users.

The project also seeks to demonstrate a novel business concept whereby Pure Air owns and operates the AFGD facility. Thus, Pure Air specializes in pollution control activities, relieving the electric utility of the operation of the AFGD unit. After the 3-year demonstration period, Pure Air will continue to own the AFGD facility and to operate it as a contracted service to the utility for an additional 17-year period. The demonstration project is located at Northern Indiana Public Service Company's 528-MWe Bailly Generating Station near Chesterton, Indiana.

Accomplishments:

During the operation portion, a number of tests on various types of coal were performed. Tests on the utility's standard coal (3-3.5% sulfur) were completed in 1992. During 1993, tests were conducted on coals with 3.5-4% sulfur and 2.5-3% sulfur. In 1994, tests were completed on coals with 4-4.5% sulfur and 2-2.5% sulfur. The scrubber is achieving SO_2 removals in excess of 95% while producing a commercial gypsum by-product with an average purity level of 97%. Smooth operation continues, and performance continues to be very good.

As of the end of June 1995, the AFGD facility had accumulated almost 26,280 hours of operation with an availability of 99.5%. Approximately 237,000 tons of SO_2 have been removed and over 210,000 tons of salable, dry, commercial-grade gypsum produced.

Commercial Applications:

The AFGD process is attractive for both new and retrofit utility applications. The demonstration project is using bituminous coals primarily from the Indiana-Illinois coal basin, with sulfur content ranging from 2.0% to 4.5%.

The AFGD facility will reduce SO_2 emissions at the Bailly Station by approximately 75,000 tons/yr. Further, the gypsum by-product and wastewater evaporation will demonstrate that SO_2 control can occur without increased solid waste or wastewater production.

All this can be accomplished with costs (and space requirements) that are roughly one-half of those associated with a conventional scrubber.

In April 1994, Pure Air of Manatee, L.P. entered into a contract to provide 1,600 MWe of SO_2 scrubbing capability at Florida Power & Light Company's Manatee power plant, on an own-and-operate basis. The Manatee scrubber will feature two 800 MWe absorber vessels.

Project Schedule:

DOE Selected Project (CCT-II)	09/28/88
Cooperative Agreement Awarded	12/20/89
NEPA Process Completed (Environmental Assessment)	04/16/90
Environmental Monitoring Plan Completed	01/31/91
Construction	04/90-09/92
Operational Testing	06/92-06/95
Project Completed	4/30/96

Project Economics:

During the design and construction phases of this program the project was slightly ahead of schedule and on budget. During the operation phases of this program, the project was on schedule and slightly under budget.

Pure Air completed the project ahead of schedule and at a cost of $144,172,139, $7,133,498 below the original estimate of $151,305,637.

Major Project Conclusion:

This demonstration project has met or exceeded all of its stated objectives. This success has advanced the confidence of the power industry in utilizing a single large wet limestone scrubbing module, and eliminating the need for any redundant spares. It is significant that there has also been a shift in interest to the own and operate concept that the project introduced on a large scale to the power industry.

Commercialization Plans:

The commercialization of the AFGD system has focused on pursuing Clean Coal driven projects in the area of retrofits. The development of this market has been slowed due to the number of utilities switching to a low sulfur fuel, by fuel switching. Recently, a market has appeared that promises to provide a considerable commercial opportunity. This market is driven by sources of low cost fuel. The combustion of coal for power is found primarily in the middle part of the country where the coal fields are located, and fuel oil combustion for power is found largely on the east coast. A relatively new fuel has become available from Venezuela, called "Orimulsion." This material is a emulsified bitumen material that behaves very much like heavy fuel oil. A power station firing this material could save a considerable amount of money for its rate payer. Orimulsion contains the equivalent sulfur content of 3.2% sulfur coal, and as a consequence SO_2 abatement equipment is required for the fuel conversion. Pure Air sees an opportunity to capture a large share of this market.

1.0 INTRODUCTION

1.1 Purpose of the Project Performance and Economics Report

The Performance and Economics Report is the last report of the program that gives a comprehensive coverage of the activities that relate to the execution of the program as defined by the cooperative agreement. This report will tie the program together as a comprehensive document addressing virtually every aspect of the project. It is expected that this report will advance the use of wet limestone scrubber technology for flue gas desulfurization in the next decade. In this manner, the United States will be able to utilize its abundant supply of high sulfur coal located in the Midwest.

1.2 Overview of the Project

1.2.1 Background and History of Project

Pure Air, a general partnership between Air Products and Chemicals, Inc. (Air Products) and Mitsubishi Heavy Industries America, Inc. (MHIA), was established in 1985 to market flue gas desulfurization (FGD) equipment and services in North America. MHIA is a wholly-owned subsidiary of Mitsubishi Heavy Industries, Ltd. which had sold 92 FGD units worldwide, with a total of over 500 years of operating time on all the units combined. The joint venture combines Mitsubishi's Advanced FGD (AFGD) technology with Air Products' plant construction and operations capability to form a company which can either sell the FGD equipment or design, construct, finance, own, operate, and maintain FGD plants. Air Products pioneered the "on-site" concept over 50 years ago, and currently owns and operates over 200 industrial gas, chemical, cogeneration, and waste-to-energy plants around the world. Many of the same types of economic benefits successfully demonstrated in other industries with own and operate project services provided by an experienced chemical plant operator can be transferred to the FGD market.

Pure Air began development efforts in early 1988 for an on-site Advanced FGD facility serving the Northern Indiana Public Service Company (NIPSCO). With the cooperation of NIPSCO, the project was submitted to the United States Department of Energy (DOE) for consideration under the Innovative Clean Coal Technology Program (Solicitation II), and was selected in September 1988 to receive cooperative funding of $63,913,200.

In September 1989, an agreement was signed with NIPSCO, whereby an AFGD facility would be constructed at its Bailly Generating Station in Dunes Acres, Porter County, Indiana (on the southern shore of Lake Michigan adjacent to the Indiana Dunes National Lake Shore). The facility

provides flue gas processing services for Bailly Units #7 and #8 which together have a nameplate capacity of approximately 600 megawatts (MW). The AFGD project involved innovative FGD technology, sale of wallboard grade gypsum by-product, and a unique third-party arrangement for processing power plant flue gas.

1.2.2 Project Organization

Figure 1-1 shows the relationships of the various partners in the AFGD project.

FIGURE 1-1
AFGD PROJECT STRUCTURE

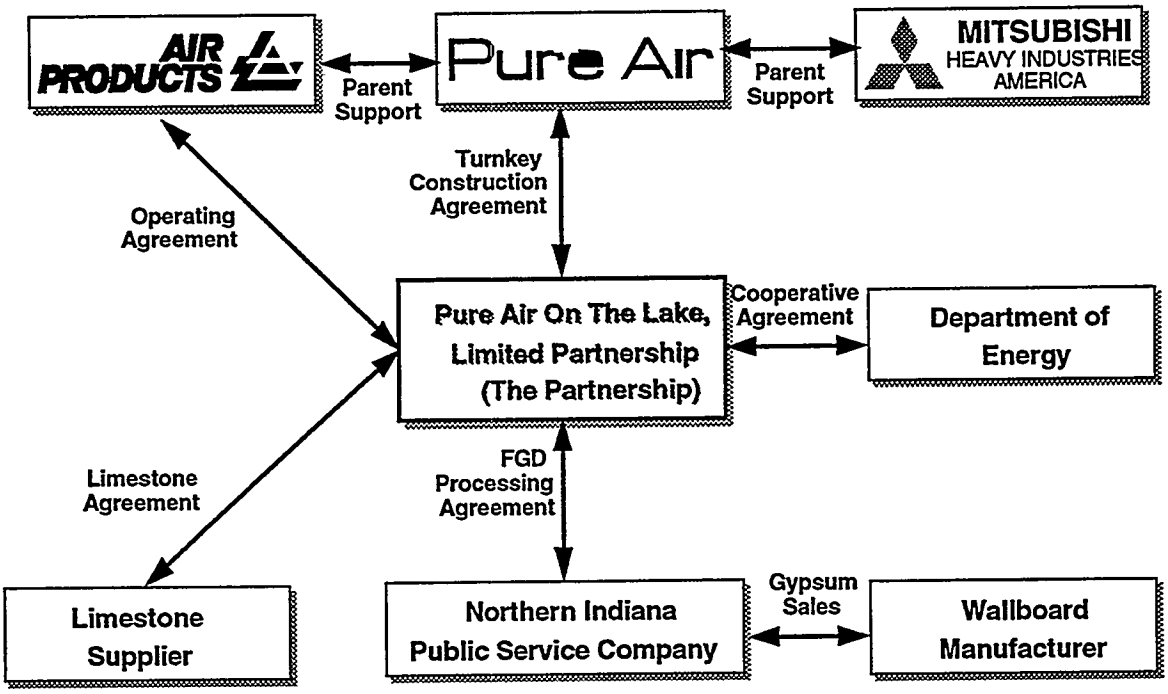

1.2.3 Project Description

The basic technology used in this project is a wet limestone scrubbing process, whereby the flue gas is scrubbed with an alkaline slurry in a co-current spray tower to remove SO_2. The sorbent used in this process is limestone. A schematic diagram of a wet limestone scrubbing system is shown in Figure 2-1. The SO_2 contained in the flue gas reacts with the sorbent in the spray tower to form an insoluble calcium compound that is separated from the absorption process, and dewatered for disposal or use, in the cement or wallboard industries. Through the use of an oxidation step, which is integral to the absorption vessel, gypsum by-product is produced.

Halides removed from the flue gas are concentrated in the circulating slurry. A key feature of the AFGD system is that it is a closed-loop process. Except for a small bleed stream all water is recycled to the process. The configuration of the wet limestone scrubber used in is this program was developed by Mitsubishi Heavy Industries (MHI). The plant was designed to handle coals with a sulfur content of up to 4.5%, and as low as 2.0%. This sulfur range permits the use of many coals from the Illinois basin, many of which would not have been usable due to the implementation of the Clean Air Act Amendments of 1990.

The project introduces several unique features that extend the technology of wet limestone scrubbing. The purpose of the project is to demonstrate that the AFGD system can significantly reduce SO_2 emissions in an environmentally sound manner at a cost of approximately 50% of conventional FGD systems, without generating continuous solid or liquid waste disposal problems. The production of a salable by-product gypsum instead of a scrubber sludge reduces solid waste production. The enhanced technology which produced an agglomerated gypsum product, known as PowerChip® gypsum, is a unique and novel development of Pure Air. Liquid waste is minimized through use of a Wastewater Evaporation System (WES). The WES evaporates wastewater upstream of the Bailly Station's Unit No. 8 electrostatic precipitator (ESP) and thus minimizes wastewater production.

The design life of the project is 20 years. The first 3 years comprise the demonstration period of the project, whereas the remaining 17 years are for full commercial operation. During the 3 year demonstration phase, special test runs were conducted using a variety of midwestern coals. Environmental monitoring focused primarily on environmental baseline or characterization monitoring and compliance monitoring. Also during the initial demonstration phase, the PowerChip® gypsum production was evaluated.

NIPSCO signed a flue gas processing agreement with Pure Air, whose scope includes the following: design, engineer, fabricate, construct, finance, own, operate and maintain an AFGD facility adjacent to the Bailly generating station. Under this agreement, Pure Air is responsible for (i) procurement of limestone, (ii) processing and returning of flue gas, (iii) delivery of wallboard grade gypsum to NIPSCO, and (iv) treatment of the wastewater from the AFGD facility. Pure Air also assisted in the development of a gypsum sales contract as part of its services to NIPSCO on this project.

Under the own and operate agreement, NIPSCO pays a monthly Base Facility Charge (BFC) for flue gas processing services. The BFC was

essentially fixed at contract execution, almost three years before commercial operation. The BFC comprises the following components:

- Fixed Component - Fixed for 20 years (Capital recovery, financing costs, start-up cost, spare parts, and risk premium).

- Fixed Variable Component - Escalates with indices (Base operating and maintenance cost recovery).

- Limestone Component - Escalates with indices (Utilization guarantee).

The Fixed Component is constant over the life of the agreement. It should be noted that this price was determined at contract execution and any cost overruns due to Pure Air's estimate are to Pure Air's account, thus providing a fixed lump sum capital cost contract.

The Fixed Variable and Limestone Components were determined at contract execution and are subject to adjustment on a quarterly basis. The Limestone Component is adjusted for the sulfur content of the coal and plant capacity factor. The Fixed Variable Component provides NIPSCO with fixed base operating and maintenance costs for the term of the agreement, thus providing a long-term fixed operating contract to NIPSCO. This approach makes Pure Air responsible for the turnkey, financing, operating and maintenance risks as well as the FGD system performance.

After completion of the demonstration period, NIPSCO entered into a long-term commercial agreement with Pure Air to process the flue gas from the Bailly Station. Pure Air guarantees the following items:

- Sulfur dioxide removal efficiency
- Reliability
- Gypsum quality (purity and moisture content)
- Capital cost of the AFGD Facility (at execution of the agreement)
- Base operating and maintenance costs (at execution of the agreement and for the term of the agreement)
- Power consumption
- Pressure drop
- Process water usage
- Wastewater quality

Over the last five years, U.S. utilities have recognized the viability of worldwide FGD trends previously not demonstrated in the United States. These include such concepts as fully oxidized systems producing wallboard grade gypsum from a single high reliability absorber unit operated by an outside company. Pure Air is currently marketing the AFGD process to utility and industrial customers. This Pure Air AFGD system incorporates

virtually all of the features recommended in the AFGD philosophy which the Electric Power Research Institute recommended to the utility marketplace[1] at the First Combined FGD and Dry SO_2 Removal Symposium in St. Louis in October, 1988.

Older "conventional" FGD systems were based on the scrubbing of SO_2 from flue gas using a low weight percent limestone/calcium sulfite/calcium sulfate slurry. The solids produced by the process were partially dewatered then sent to a landfill. The solids generated were a sludge with poor handling characteristics. The formation of the calcium sulfate component is accomplished through natural oxidation in the absorber tower, where residual oxygen in the flue gas oxidizes the calcium sulfite to calcium sulfate. The formation of a mixture of these two species causes severe scaling and plugging of the circulation loop as a result of the scaling problems. The industry was driven to install multiple 100% modules that would be put in service during maintenance outages of the modules. The installation of multiple modules forces the manufacturer of the scrubbing equipment to have non-utilized installed capital. The development of the single train, fully oxidized wet limestone system has significantly reduced the installed cost of flue gas scrubbing equipment. There are additional advanced features in the Pure Air AFGD system that are expected to further the development of the flue gas scrubbing technology. These features are the Air Rotary Sparger (ARS), which provides a new and novel way of oxidizing the circulating slurry to virtually 100% gypsum, and the demonstration of the WES, which is an attempt at achieving zero wastewater discharge through evaporating the AFGD wastewater stream in the hot flue gas produced by the power station.

1.2.4 Site

The project is located at NIPSCO's Bailly Generating Station. The station is situated along the shore of Lake Michigan approximately 12 miles northeast of Gary, Indiana. The station is bordered on the south and west by Bethlehem Steel Corporation's Burns Harbor complex. The Indiana Dunes National Lakeshore borders the site to the east. The area to the west of the site is heavily industrialized.

The location of an FGD unit significantly affects the cost of its operation. Access to a source of limestone is important; even though limestone is abundant, transportation costs can become a major factor. This same criterion applies to the handling of the by-product gypsum. Transportation costs again are important; even though a plant may produce wallboard quality gypsum, there may not be convenient routes for transporting the

[1]"Advanced Simplified FGD Design," Dalton, Stuart M., Moser, Robert E., Electric Power Research Institute, and Burke, Jack M., Colley, J. David, Radian Corporation, October 1988.

product to ready markets. The site selected for this project is ideal from both points of view; the limestone supply is located on the northern peninsula of Michigan, but barge transportation is available. Proximity to a major metropolitan area, such as Chicago, provides a ready outlet for wallboard grade gypsum.

1.2.5 Project Schedule

The overall project schedule was as follows:

1. Last quarter 1988 through third quarter 1992 - Phase 1 Design and Permitting: included development of the Environmental Information Volume (EIV) and Environmental Assessment (EA), developing design data, process engineering, detailed engineering, equipment procurement, obtaining all engineering and environmental permits, and developing the EMPO and EMP.

2. Second quarter 1990 through second quarter 1992 - Phase 2 Construction and Start-Up: included providing construction utilities, modifying Bailly Station facilities, calibration and pre-commissioning start-up.

3. Third quarter 1992 through third quarter 1995 - Phase 3 Demonstration Operation: included providing utilities for operation, monitoring engineering and environment parameters, and reporting results of operation to the DOE.

4. Third quarter 1995 through 2012 - Phase 4 Commercial Operation: included compliance monitoring and commercial operation arrangement between Pure Air on the Lake, L.P. and NIPSCO.

The breakdown test plan schedule for the short-term and the long-term tests is presented in the project schedule.

PROJECT SCHEDULE

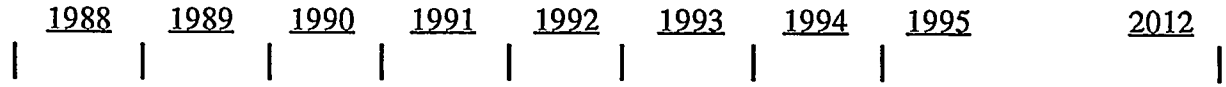

PHASE I
Design & Permitting

PHASE II
Construction & Start-up

PHASE III
Demonstration of Operation
- Demo Test I (2.0 to 2.5%)
- Demo Test II (2.5 to 3.0%)
- Demo Test III (3.0 to 3.5%)
- Demo Test IV (3.5 to 4.0%)
- Demo Test V (4.0 to 4.5%)
- Demo Test VI (optimum sulfur)

WES Demonstration
- Test 1
- Test 2
- Test 3

PHASE IV
Commercial Operation

1.3 Objectives of the Project

The purpose of the Bailly project was to demonstrate that by combining AFGD technology, highly efficient sophisticated plant operation and maintenance capabilities, and by-product gypsum sales, a significant reduction of SO_2 emissions could be achieved at a substantially lower cost than the then currently available conventional FGD systems. The Bailly Project used the following advanced features which will have economic effects on future FGD systems:

- Single 600 MW module design which reduces costs. Use of a single 100% capacity absorber module eliminates the need for spare modules due to the high reliability of the module design.

- Co-current, single loop absorber design with in-situ oxidation, which produces high quality gypsum while operating with a wide range of high sulfur coals. Oxidation is accomplished by an innovative air rotary sparger system.

- A contractual arrangement whereby the FGD supplier owns and operates the plant for 20 years or more, with ongoing performance guarantees which reduce operating risk and cost to utilities and their customers.

- Sale of commercial grade gypsum to a wallboard manufacturer.

- Direct injection of powdered limestone.

- High SO_2 removal efficiency, up to 95%.

- Use of a wastewater evaporation system, which reduces water disposal problems inherent in many U.S. power plants.

- Multiple boilers feeding flue gas to a single absorber module, which significantly reduces costs at power plants with multiple boiler units.

- Demonstration of feasibility to produce an agglomerated physical form of gypsum which could be handled and transported in the same methods as natural rock gypsum.

1.4 Significance of the Project

The operation of conventional wet limestone FGD processes, with partial or no oxidation of the calcium sulfite to calcium sulfate, was characterized by the large quantity of solid waste generated. The production of a solid sludge by-product that can only be landfilled is trading one form of

pollution for another. The operation of a fully oxidized wet limestone scrubber producing a salable by-product was demonstrated in the AFGD project.

The operation of wet limestone scrubbers in the past has been characterized by poor reliability, high installed capital costs due to multiple backup modules, high operating costs associated with poor limestone utilization, and high costs of waste disposal. The project also demonstrated that large single FGD modules can be operated cost effectively with high levels of reliability. This project will provide baseline information to the power industry concerning the operation of single FGD modules, in virtually every aspect of plant operation, including plant reliability, maintenance issues, and environmental issues. It is believed that this project will encourage and promote the utilization of AFGD technology.

The operation of any wet limestone scrubber has the problem of treatment and disposal of a liquid waste stream. This stream has a high chloride content that can cause some disposal problems. The WES demonstrated the ability to approach zero discharge of wastewater. The wastewater from the AFGD was injected into the hot flue gas of the power station upstream of the ESP units where the dried material was removed with the fly ash. The goal of "zero discharge" for a wet limestone scrubbing system is desirable from an environmental viewpoint.

The use of conventional FGD gypsum which is much like wet fine sand has slowed its acceptance in certain industries, such as cement production plants which typically use natural rock gypsum. The PowerChip® gypsum can improve the cohesive stickiness of this gypsum and allow the plant to handle PowerChip® gypsum in the same equipment designed for natural rock gypsum.

1.5 DOE's Role in the Project

The DOE, through its administration of Clean Coal funds authorized by Congress, has encouraged the movement of new technologies into the marketplace that promote the utilization of coal. The DOE is administering the funds in such a way as to encourage the use coal as an energy source and to demonstrate technologies that will do so in an environmentally sound manner. This AFGD project provided the DOE with baseline data for the operation of an advanced wet limestone scrubber that will aid in the development of future scrubbers. The scrubber design represented by the Bailly AFGD has several novel features that will have use in future FGD units.

The DOE's role was to monitor the project, evaluate the environmental impacts, share in project costs and risk, and play a limited role at key project decision points.

Under the terms of the cooperative agreement, the DOE was responsible for monitoring all aspects of the project and for granting or denying all approvals required by the cooperative agreement.

2.0 TECHNOLOGY DESCRIPTION

2.1 Description of the Demonstrated Technology

The AFGD system installed on Bailly Unit #7 and Unit #8 was designed from a long term operating viewpoint. Since the anticipated useful life of the scrubber is 20 years, an effort was made to achieve maximum reliability and component life for this time span. The use of spare parts, future expansion capability and top quality materials of construction ensures project continuity through its initial 20-year life. Further, at the end of 20 years, NIPSCO will have the option to extend the agreement with Pure Air and the facility's use into the future. The following list details the unique features of the AFGD unit.

- **Single Large Absorber**

  Ordinarily, an FGD facility contains several SO_2 absorber or "scrubber" modules, with one spare module added to improve system reliability. The AFGD facility at Bailly utilizes a single nominal 600 MWe absorber module. At the time of its construction, it was the largest capacity absorber module in the United States, scrubbing all the flue gases from the Bailly station's two coal-fired boilers. There are no spare or back-up modules thereby requiring a high degree of system reliability. This high level of reliability enables the scrubber to remove 95% or more of the SO_2 without the use of performance-enhancing chemical additives.

- **Single Loop Scrubber with In-Situ Oxidation**

  Another space-saving feature is the utilization of the SO_2 absorber to perform three separate functions: prequencher, absorber, and oxidation of scrubber sludge ($CaSO_3$, calcium sulfite) to gypsum ($CaSO_4$, calcium sulfate). Older FGD systems often employ two or three separate vessels to perform these functions. The AFGD system at Bailly produces a gypsum by-product that is suitable for commercial uses such as wallboard or cement. This is in lieu of producing scrubber sludge, which would have to be landfilled as solid waste.

- **High Velocity Co-Current Absorber**

  The SO_2 absorber utilizes a high velocity co-current design, in which the scrubbing slurry moves in the same direction as the flue gas flow. Operation at a relatively high flue gas velocity of approximately 20 feet per second allows for a more compact absorber. This feature, combined with the absence of any back-up modules, contributes to reduced space requirements for the AFGD system.

- **Direct Limestone Injection**

  At Bailly, pulverized limestone is injected directly into the SO_2 absorber. The pulverized limestone is purchased from a limestone supplier, thereby eliminating the need for on-site wet grinding systems. This reduces the overall spare requirement for the AFGD system.

- **Air Rotary Sparger**

  The ARS is a novel device incorporated within the absorber module. Basically, the ARS combines the functions of mixing and air distribution within the absorber, thereby facilitating the oxidation of scrubber sludge to gypsum. In a conventional FGD system, mixing would be done by agitators while oxidation air distribution would be performed by a separate fixed sparger arrangement. Merging these functions into one equipment item provides better mixing within the base of the absorber.

- **Wastewater Evaporation System**

  Wastewater disposal often poses a difficult problem for scrubber operators, particularly where the oxidation of scrubber sludge to gypsum is employed. The AFGD project at Bailly uses a WES, a novel system in which process wastewater is injected into the flue gas ductwork upstream of the existing electrostatic precipitator (ESP). The hot flue gas evaporates the wastewater, and dissolved solids in the wastewater solidify so that they are collected by the ESP along with the fly ash. At Bailly, the WES was demonstrated only on one boiler unit (i.e., 345 MWe). Since this application was successful, the WES concept can be used in future designs for zero liquid discharge scrubbers. That is, the scrubbers would produce a usable gypsum by-product and no wastewater effluent.

2.2 Description of the Demonstration Facilities

System Division

The AFGD facility consists of the following sections:

Section 100	Absorption Section
Section 300	Dewatering, Gypsum Handling and Wastewater Evaporation Section
Section 500	Limestone Feed Section
Section 600	Utility Section
Section 700	Sump Section
Section 800	Hydrated Lime Feed Section

These sections are described on the following pages. For a summary of the equipment designations, refer to the process flowsheet, Figure 2-1. For detail equipment designation, refer to the Process and Instrumentation Diagrams presented in Appendix A.

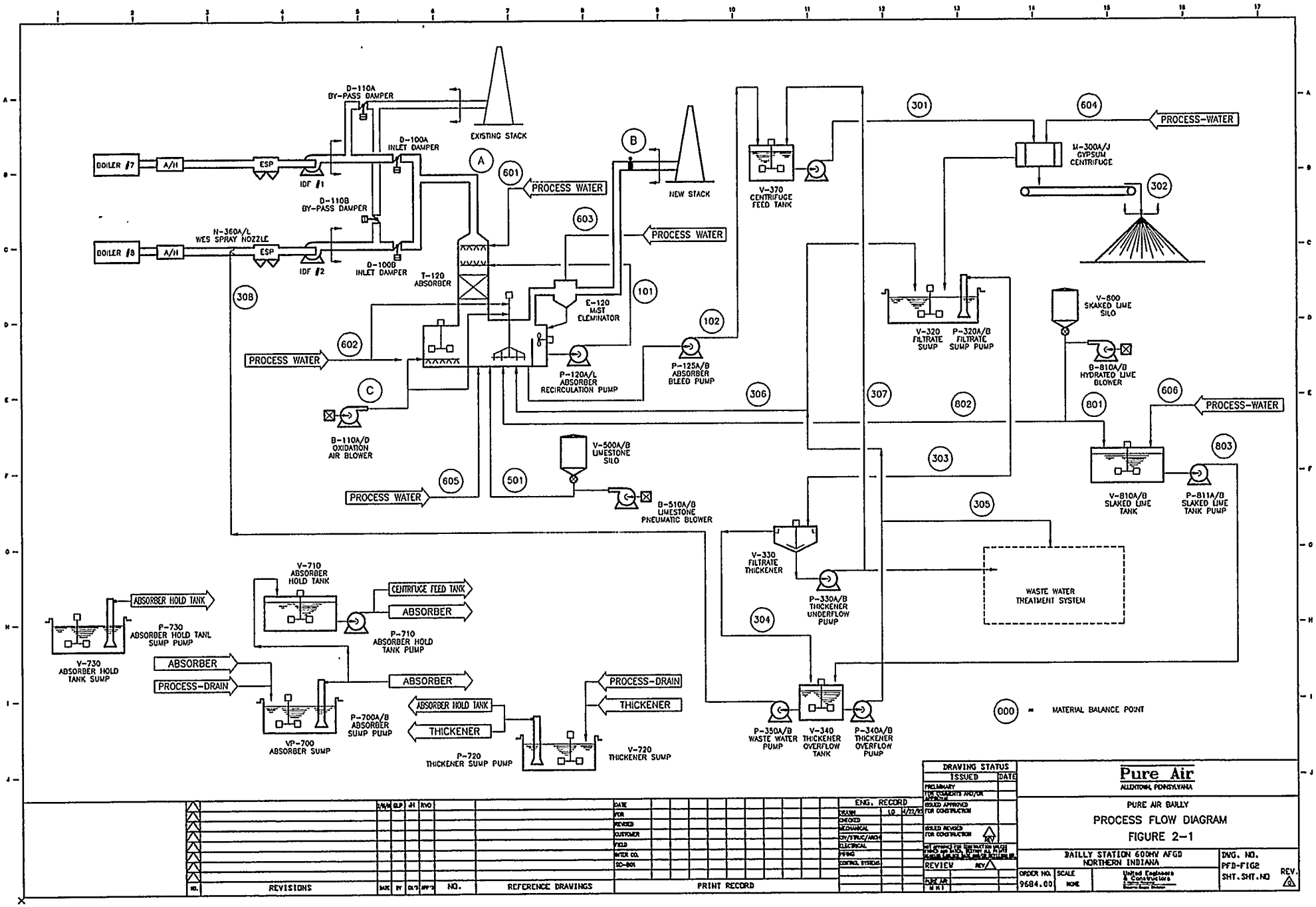
BOILER #7
A/H
ESP
IDF #1
D-110A BY-PASS DAMPER
D-100A INLET DAMPER
EXISTING STACK
BOILER #8
IDF #2
D-110B BY-PASS DAMPER
D-100B INLET DAMPER
N-360A/L WES SPRAY NOZZLE
T-120 ABSORBER
PROCESS WATER
NEW STACK
E-120 MIST ELIMINATOR
P-120A/L ABSORBER RECIRCULATION PUMP
P-125A/B ABSORBER BLEED PUMP
B-110A/D OXIDATION AIR BLOWER
V-500A/B LIMESTONE SILO
B-510A/B LIMESTONE PNEUMATIC BLOWER
V-370 CENTRIFUGE FEED TANK
M-300A/J GYPSUM CENTRIFUGE
PROCESS-WATER
V-320 FILTRATE SUMP
P-320A/B FILTRATE SUMP PUMP
V-800 SLAKED LIME SILO
B-810A/B HYDRATED LIME BLOWER
V-810A/B SLAKED LIME TANK
P-811A/B SLAKED LIME TANK PUMP
V-330 FILTRATE THICKENER
P-330A/B THICKENER UNDERFLOW PUMP
WASTE WATER TREATMENT SYSTEM
V-710 ABSORBER HOLD TANK
CENTRIFUGE FEED TANK
ABSORBER
P-710 ABSORBER HOLD TANK PUMP
ABSORBER HOLD TANK
P-730 ABSORBER HOLD TANL SUMP PUMP
V-730 ABSORBER HOLD TANK SUMP
PROCESS-DRAIN
VP-700 ABSORBER SUMP
P-700A/B ABSORBER SUMP PUMP
THICKENER
P-720 THICKENER SUMP PUMP
V-720 THICKENER SUMP
P-350A/B WASTE WATER PUMP
V-340 THICKENER OVERFLOW TANK
P-340A/B THICKENER OVERFLOW PUMP
000 = MATERIAL BALANCE POINT
DRAWING STATUS
ISSUED
DATE
ENG. RECORD
Pure Air
ALLENTOWN, PENNSYLVANIA
PURE AIR BAILY
PROCESS FLOW DIAGRAM
FIGURE 2-1
BAILLY STATION 600MW AFGD
NORTHERN INDIANA
DWG. NO.
PFD-FIG2
SHT. SHT. NO
REV.
ORDER NO. 9684.00
SCALE NONE
REVISIONS
REFERENCE DRAWINGS
PRINT RECORD

Process Description

Section 100 Absorption Section

Major Equipment

Absorber	T-120
Air Rotary Spargers	A-120A/C
Fixed Air Sparger	A-120D
Oxidation Agitators	A-140A/B
Neutralization Agitators	A-130A/B
Absorber Recirculation Pumps	P-120A/L
Absorber Bleed Pumps	P-125A/B
Oxidation Air Blowers	B-110A/D
Mist Eliminator	E-120

Flue Gas

The FGD system is separated from the boiler ductwork by guillotine dampers supplied by NIPSCO. Each boiler is supplied with a damper to the existing stack, designated the FGD bypass, and an FGD inlet damper to the Pure Air system. Operation of the dampers is under NIPSCO control.

Flue gas exiting the ID fans is monitored for pressure, temperature, opacity and SO_2 concentration; this information is displayed on the Distributed Control System (DCS). A series of flow measuring probes is used to approximate the flue gas flow rate. This signal, along with signals from NIPSCO for boiler load, air flow and the SO_2 analysis, forms the basis for the FGD load calculation. Flue gas leaving the absorber is also monitored for pressure, temperature and SO_2 levels.

Absorber and Ancillaries

Absorber

The single 100 percent absorber (T-120) is a co-current flow grid-packed tower with a combined reaction tank at the bottom designed to incorporate humidification of the incoming gas, absorption of the SO_2, dissociation of the sulfurous acid, oxidation to sulfuric acid, crystallization to form gypsum (with simultaneous oxidation of sulfite into sulfate), and neutralization with limestone. The flue gas enters the top of the absorber where it contacts recirculating slurry. The area directly above the sprays, called the wet/dry interface, receives a wash with process water to prevent the formation and growth of any deposits. Grid packing (made of a plastic polymer) is located at an intermediate portion of the tower to provide a large surface area for gas/liquid contact to enhance the SO_2 removal efficiency (Figure 2-2).

FIGURE 2-2

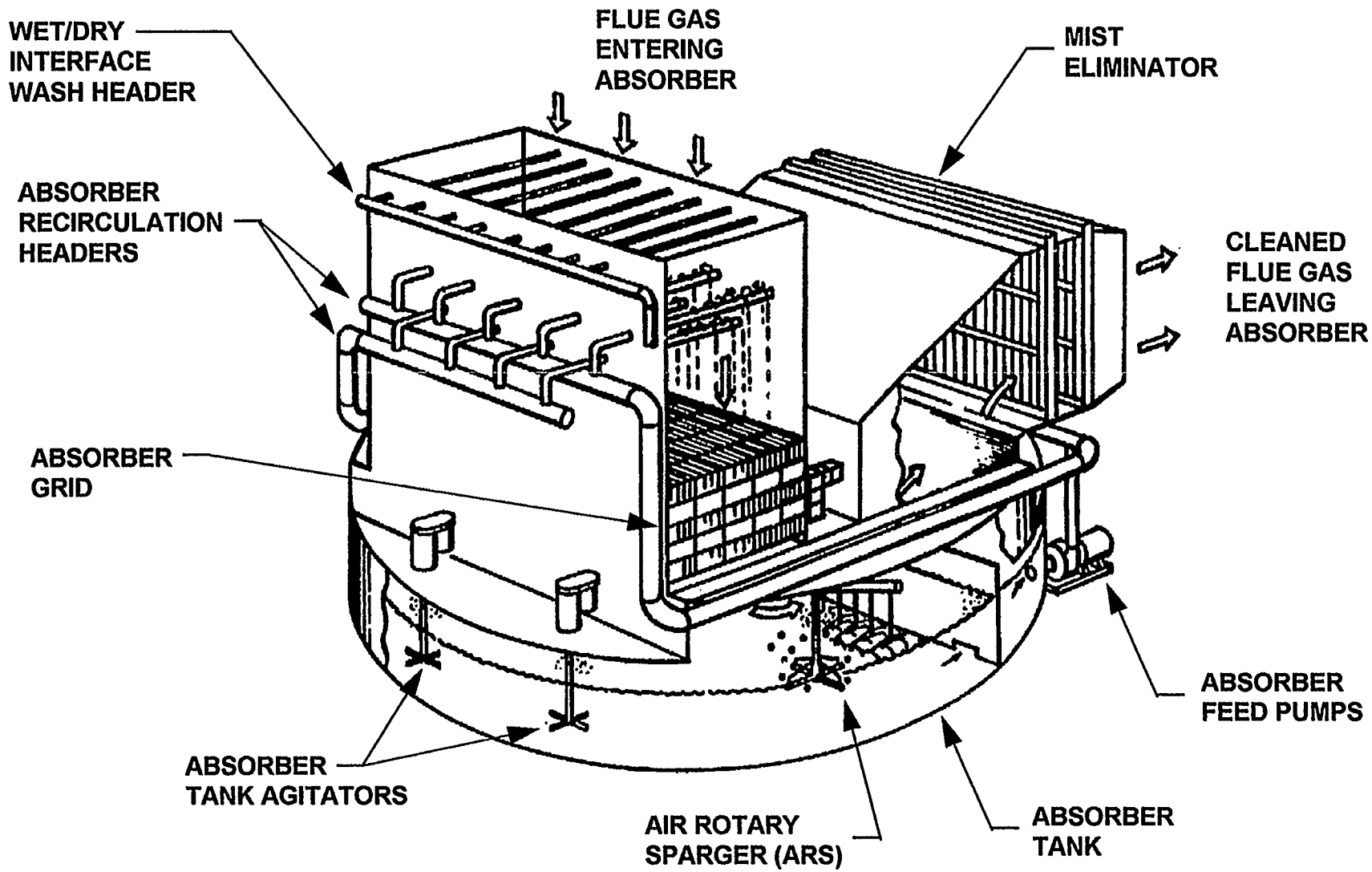

ABSORBER MODULE

The SO_2 in the flue gas is absorbed into the recirculating slurry as the gas flows downward through the tower. The absorbed SO_2 is partially oxidized in the absorber by oxygen in the flue gas. Complete oxidation is accomplished in the reaction tank. After flowing through the absorber tower, the flue gas turns over the reaction tank; the flue gas then flows upward through the mist eliminator (E-120) located vertically in the horizontal outlet duct.

To ensure the complete oxidation of calcium sulfite, oxidation air is injected by means of an air sparging system consisting of three (3) air rotary spargers (A-20A/C) and a fixed air sparger (A-20D).

The ARS is an innovative and unique device which combines agitation with oxidation. The ARS is composed of a hollow shaft, incorporating four horizontal arms with holes for air sparging. By rotation of the ARS and the introduction of feed air, fine bubbles are formed. This increases the contact area between air and slurry and results in high O_2 utilization efficiency.

The Fixed Air Sparger (FAS) is located near the bottom of the tank. It is composed of a piping network of high-velocity nozzles which enable the formation of fine air bubbles and thus force complete oxidation before the recirculating slurry passes from the oxidation tank to the neutralization tank. This sparger ensures uniform distribution of air bubbles throughout its length. The majority of the sulfur oxides in the slurry are oxidized by the three ARSs with the remainder being oxidized by the FAS before leaving the oxidation tank.

Process Chemistry

The chemistry of SO_2 absorption from the flue gas and its conversion into gypsum is as follows. First, in the absorber tower:

$$SO_2 + H_2O \rightarrow H_2SO_3$$
$$H_2SO_3 \rightarrow H^+ + HSO_3^-$$
$$(H^+ + HSO_3^- + \tfrac{1}{2}O_2 \rightarrow 2H^+ + SO_4^{-2})$$
$$(2H^+ + SO_4^{-2} + CaCO_3 + H_2O \rightarrow CaSO_4 \cdot 2H_2O + CO_2)$$

The SO_2 is absorbed into H_2O to form H_2SO_3, which then dissociates to $H^+ + HSO_3^-$. A portion of the HSO_3^- is oxidized by oxygen in the flue gas and is converted into H_2SO_4 (sulfuric acid). The $CaCO_3$ (calcium carbonate) in the slurry neutralizes a portion of the H_2SO_4, helping to balance the slurry pH. The conversion to gypsum is completed as follows:

$$H^+ + HSO_3^- + \tfrac{1}{2}O_2 \rightarrow 2H^+ + SO_4^{-2}$$
$$2H^+ + SO_4^{-2} + CaCO_3 + H_2O \rightarrow CaSO_4 \cdot 2H_2O + CO_2$$

All remaining HSO_3^- in the slurry is oxidized by air from either the ARS or the fixed air sparger and converted into H_2SO_4. This H_2SO_4 in turn is neutralized with $CaCO_3$ to form $CaSO_4 \cdot 2H_2O$.

Surplus $CaCO_3$ is suspended in the slurry, providing a source of carbonate ion through dissolution as the carbonate is consumed and maintaining the pH of the slurry. The resultant slurry, in which the concentration of SO_2 or SO_3^{-2} is almost nil, is pumped back up to the top of the absorber to contact with the flue gas. Make-up pulverized limestone is pneumatically injected into the neutralization tank through piping from the limestone feed area.

The absorber module has two tiers of spray headers, with each tier having an independent slurry recirculation line. Six absorber recirculating pumps (P-120) are connected to each recirculation line. The number of recirculating pumps in use depends on plant operating conditions.

The SO_2 concentration in the flue gas leaving the absorber is monitored and controlled by regulating the number of recirculating pumps running and by the amount of limestone injected into the neutralization tank. In order to ensure the stable operation of the centrifuges and prevent scaling, the gypsum slurry concentration in the oxidation tank is maintained between 20 and 25 weight percent.

Water in the reaction tank is consumed through evaporation into the flue gas and as water of hydration during gypsum formation. With the loss of water, the addition of limestone and the formation of gypsum, the slurry concentration in the oxidation tank increases. This slurry concentration is monitored by a density meter, and on a demand signal from it, fresh make-up water is added to the absorber tank.

Oxidation Air Blowers

Three oxidation air blowers (B-110 B/D) are provided to supply the oxidation air to the ARSs and the FAS. The air flow rate to the spargers is controlled by FIC-344 for the FAS and FIC-345 for the ARSs (see Appendix A - page 14). The controller setpoints are automatically calculated by the DCS, depending on the process air requirements.

Flue gas exiting the absorber enters a vertical mist eliminator located in the horizontal outlet duct leading from the reaction tank. An intermittent spray water washing system is installed in front of both stages of the mist elements and at the rear side of the first stage, to wash the elements and reduce gypsum deposit buildup. After passing through the mist eliminators, the scrubbed flue gas exits through the outlet duct to the new NIPSCO stack.

Section 300 Dewatering Section

The gypsum slurry drawn off by the absorber bleed pump is fed to the V-370 centrifuge feed tank. From this tank it is then pumped by the P-370A/B centrifuge feed pump(s) to the centrifuge head tank (V-300), which is located above the centrifuge feed slurry header, to ensure stable back pressure and a constant feed rate to the centrifuges.

The Bailey DCS batch program coordinates the choice of centrifuges to be operated. Nine basket type centrifuges (M-300A/I) are provided to reduce the gypsum slurry to a dewatered cake containing less than 10 percent moisture by weight.

The cake washing cycle is part of the centrifuge operating cycle. Cake is washed with process water to reduce the chloride content to less than 120 ppm, which meets the requirement of wallboard manufacturers. Upon completion of the drying cycle, the gypsum cake is scraped out of the centrifuge onto a conveyor and sent to storage.

During the feed, dewatering, and washing cycles, filtrate is drained from the centrifuges and collected in the filtrate sump. Filtrate produced by the dewatering process is recycled and used as make-up water. Before it is returned to the absorber, fly ash and impurities suspended in the filtrate water are removed in order to avoid the accumulation of such materials in the slurry. For this purpose, filtrate is sent to the filtrate thickener (V-330) for solids separation.

In the filtrate thickener, the supernatant, with suspended solid content of less than 500 ppm, overflows the weir and collects in the thickener overflow tank (V-340). Sediment is raked out and pumped to the centrifuge feed tank via the thickener underflow pump, where it is combined with the absorber bleed slurry flow. Fly ash is recovered as a component of the by-product gypsum. In the event that the fly ash is not recovered in the by-product gypsum, it accumulates in the dewatering loop. Since this may have an adverse effect on dewatering performance and/or gypsum quality, the thickener underflow line is piped to the Wastewater Treatment Plant (WWTP).

A portion of the thickener overflow is not recycled but discharged to either the WWTP or the WES. This is done to avoid the accumulation of surplus impurities in the process, especially chlorides. The accumulation of chlorides in the slurry negatively impacts absorber performance and gypsum quality, and increases the risk of metal surface corrosion. The total wastewater quantity discharged is controlled so that the maximum chloride concentration in the slurry is 20,000 ppm. The boiler load signal is used to control the chloride level since most of the chloride comes from the flue gas. The total amount of chloride supplied is proportional to the flue gas flow rate. The following flows are taken into account as wastewater flow quantity:

a. Thickener underflow to the WWTP.
b. Thickener overflow to the WWTP.
c. WES system supply flow.

The amount of wastewater discharged is controlled so that the sum of the above flow rates becomes the target value which is calculated based on the boiler load signal.

Wastewater Evaporation System (WES)

In the original design of the WES as presented in the Public Design Report Volume 1, wastewater is sent to the WES (at 850 psig) by the P-350 wastewater pump. Two flue gas ducts are branched from the outlet of the air heater of No. 8 boiler unit and lead to the ESPs. The WES nozzles are located inside the flue gas duct between the air heater and the ESPs. There are six WES nozzles in each of these ducts (a total of 12), and they are installed upstream of the ESPs.

Wastewater is sprayed through the WES nozzles to form a fine mist and then mixed with the flue gas. The fine mist is evaporated by the heat energy of the flue gas and both the suspended and dissolved particles are dried to solids, which are removed by the ESPs together with other fly ash. Since spray water robs heat energy from the flue gas during evaporation, the quantity of spray water is restricted so that the downstream temperature remains high enough to protect the duct surface against sulfuric acid attack. The quantity of spray water is controlled by the number of WES nozzles in use. The start-up/shutdown of every WES nozzle is sequentially controlled by a remote signal from the DCS.

The original concept of high pressure atomization was considered to be the most cost effective method for a 3 year demonstration period; however, difficulties experienced in operating the single fluid system precluded its continued use. The analysis of the performance of the single fluid nozzle showed several areas of concern with long-term operability. One major problem with the spray head design with multiple nozzles was interference with the spray patterns from individual nozzles. The interference was verified using laser particle size measurement techniques. Measurement of the spray patterns showed coalescence of the drops. These large particles were greater than 100 microns, traveled ballistically and impacted the floors and walls, causing a buildup of solids. The conclusion reached from the first demonstration period was that the reliability of a single fluid nozzle was not sufficient to continue with its use. The single fluid nozzle was changed to a dual fluid nozzle design that ensured a consistent particle size distribution of less than 50 microns.

Section 500 Limestone Feed Section

Major Equipment

Limestone Silos	V-500A/B
Limestone Rotary Feeders	M-500A/B
Limestone Transfer Blowers	B-510A/B
Limestone Unloading Blowers	B-520A/C
Limestone Feed Pumps	M-530A/B
Limestone Dust Collector and Fan	M-540A/B

Limestone Unloading and Storage

Limestone, supplied by truck in a pulverized form (99.4% passing through a 325 mesh), is pneumatically unloaded to the limestone silos (V-500A/B) by the limestone unloading blowers (B-520A/C). To avoid bridge formation of the stored limestone in the silos, and to fluidize it for smooth discharge, compressed air is injected into the silos intermittently from the B-810A/C aeration-airslide recirculation blowers along the bottom plate of the silos.

Limestone Feed

The limestone feed rate to the absorber is controlled to maintain the FGD outlet SO_2 concentration in the gas within the pre-set value. Upon receipt of the demand signal from the control circuit, limestone is discharged from the bottom of a silo by a rotary feeder, and the feed rate is changed by varying the rotating speed of the feeder.

Limestone discharged by the feeder is gravity fed to a screw pump where it is then pneumatically transferred to the absorber with the help of the compressed air supplied by the limestone transfer compressors (B-510A/B). Limestone injection nozzles are provided at the neutralizing section of the absorber tank and dipped into the slurry to allow pulverized limestone to be mixed with the slurry.

There are two independent limestone transfer systems that include piping, screw pumps, and limestone injection nozzles. This establishes a completely redundant system.

Section 600 Utility Section

Major Equipment

Instrument Air Compressors	K-600A/B
Instrument Air Dryers	M-600A/B
Inhibited Cooling Water Pumps	P-610A/B

Process Water

Process water passes through a duplex filter (ST-1) to eliminate large particles and is then distributed as follows:

- Absorber tank make-up
- Mist eliminator washing
- Wet/dry interface washing
- Centrifuge cake washing
- ARS and fixed sparger nozzle washing
- Analyzer/instrument washing
- Process line flushing
- Pump sealing
- Utility stations

Prior to being supplied for the wet/dry interface wash and pump sealing, process water is passed through a cyclone self cleaning screen and duplex strainer to eliminate the fine particles, thereby avoiding nozzle plugging and protecting the pumps from damage.

Potable Water

Potable water is used to supply all of the water needs in the Administration Building as well as the safety showers and eyewash stations throughout the facility. This water comes from wells drilled in the area of the Administration Building (there is one north and one south of the building). Their combined flow is 50 gallons per minute. Submersible well pumps are used to pump the water from the wells to the building and maintain the system pressure at about 45 psig.

To purify the water, a water treatment system is used consisting of cyclone separators, sand filters and a water softener. The cyclone separators are designed to remove sand and other suspended particles from the water.

The WWTP has a potable water system provided to it by NIPSCO. Safety showers and eyewash stations are provided in the chemical storage area. It is recognized that the supply of emergency showers and eyewash stations from wells cannot be 100% guaranteed. In dry summers the water table level may fall and, of course, a well pump may fail. For this reason, an emergency backup system has been installed. The potable water system in the WWTP is tied into the potable water system in the dewatering

building. In this way, a low pressure condition in the Pure Air on the Lake (PAL) system will be detected by a pressure switch, which will then open a solenoid operated valve in the tie-in line, and join the two systems together. A backflow preventer ensures that water from the AFGD system cannot flow into NIPSCO's system.

Inhibited Cooling Water System

This plant utilizes a closed loop cooling water system which consists of two coolers (H-610A&B), two circulation pumps (P-600A and P-600B), an expansion tank (V-610) and a piping network. The makeup water for this system comes from the process water. The system provides cooling for the instrument air compressors and the oxidation air blower lube oil coolers.

Instrument Air System

Plant operating, control and utility air is provided by two (100% each) sets of instrument air compressors, two (100% each) dryer units with prefilters, afterfilters and the dryers themselves, a surge vessel (1060 ft^3 volume) and a pressure relief device on the surge vessel set at 150 psig. Only one compressor and one dryer system is on-line at a time; the other unit is on standby.

A continuous dew point monitoring system is in place. It insures that a very low moisture content (-40°F dew point) is maintained in the instrument air system by continually verifying that the air dryers are functioning properly. In the event of a moisture breakthrough, the moisture analyzer will issue an alarm to the control room.

Emergency Quench System

The emergency quench system is provided to protect the absorber from being damaged by excessive heat during an upset condition such as a total power outage, the absorber recirculation pumps trip, etc. This happens when hot flue gas enters the absorber while there is insufficient quenching water available. There are three hard-wired temperature switches, installed on the outlet of the mist eliminator, to detect this condition. As soon as this occurs, a trip signal is initiated by a 2 out of 3 voting system of these temperature switches. This method of initiation safeguards against an accidental shutdown of the FGD facility caused by any instrument malfunction. With this signal, the main diesel quench pump switches on and NV-124 (see Appendix A - page 3) opens automatically to commence spraying through the nozzles located at the absorber duct inlet. Meanwhile, the same signal is sent to NIPSCO's power station requesting closure of the inlet guillotine dampers and opening of the by-pass dampers.

Section 700 Sump Section

Major Equipment

Absorber Sump Agitator	A-700
Absorber Sump Pumps	P-700A/B
Absorber Sump	V-700
Absorber Hold Tank Agitator	A-710
Absorber Hold Tank Pump	P-710
Absorber Hold Tank	V-710
Thickener Sump Agitator	A-720
Thickener Sump Pump	P-720
Thickener Sump	V-720
Absorber Hold Tank Sump Agitator	A-730
Absorber Hold Tank Sump Pump	P-730
Absorber Hold Tank Sump	V-730

The absorber hold tank (V-710) is provided to receive and hold slurry in the event that,

- the absorber is to be drained or
- wastewater from the thickener overflow and/or underflow cannot be discharged to the WWTP while the plant is operating or
- the dewatering system is out of service while the plant is operating or
- a large amount of slurry is needed to be stored for some other reason.

Under such conditions, depending on valve arrangements, slurry can be sent to the absorber hold tank. Conversely, slurry in the hold tank can be transferred to the absorber and/or the centrifuge feed tank by the P-710 absorber hold tank pump or through the V-730 absorber hold tank sump to the V-700 absorber sump and then to the absorber. Adjacent to the absorber hold tank, the absorber hold tank sump (V-730) is provided to collect the hold tank drain and other drains around the sump.

Absorber Sump

The V-700 absorber sump is generally used for drains from the pH, SO_3 and CO_3 analyzers and process drains from the absorber and recirculating pump areas. These collected drains are pumped by the absorber sump pump (P-700A/B) to the absorber. When the absorber is to be drained, valves are opened and while the absorber is draining into the sump, the absorber sump pumps are pumping to the absorber hold tank. The absorber sump pumps start and stop automatically to control the sump level. If the level reaches a high position while one pump is running, the standby pump starts automatically.

Thickener Sump

The thickener sump (V-720) is located beneath the filtrate thickener. Usually, floor drains such as pump sealing water spillage and flushing water are flowing into this sump. Once the liquid level in this sump reaches a high level setpoint, the thickener sump pump (P-720) automatically starts and the liquid is pumped to the filtrate thickener. When it becomes necessary to drain out the thickener, the liquid is stored in this sump.

In a situation where the thickener underflow slurry cannot be sent to either the wastewater treatment plant or recycled to the centrifuge feed tank but plant operation has to be continued, slurry is sent to this sump. If required, the slurry can be transferred to the absorber hold tank through the thickener sump pump (V-720) to allow longer operation.

Section 800 Hydrated Lime Feed Section

Major Equipment

Hydrated Lime Rotary Feeder	M-800
Hydrated Lime Silo	V-800
Hydrated Lime Injection Tank Agitators	A-810A/B
Aeration Air Slide Recirculation/Transfer Blowers	B-810A/B
Hydrated Lime Injection Tanks	V-810A/B
Neutralization Pumps	P-811A/B
Hydrated Lime Silo Dust Collector and Fan	M-840

Hydrated Lime Unloading and Storage

Hydrated lime is supplied by truck in a pulverized form and pneumatically unloaded to the hydrated lime silo (V-800) by operating the unloading blower mounted on the truck. Hydrated lime, by nature, absorbs atmospheric moisture and gradually loses much of its fluidity during its storage in a silo. To avoid the above phenomenon, a hydrated lime recirculation system is provided. The recirculation system activates automatically once the manually initiated start command is given.

Hydrated Lime Feed to the Hydrated Lime Injection Tank

Normally, hydrated lime is supplied to the V-810A/B hydrated lime injection tanks where it is used to neutralize the filtrate discharged from the centrifuges. In these tanks, hydrated lime is mixed with water to form a 10 wt% slurry. Upon receiving a signal from AIC-190 (Alarm Indicator Control), the neutralizing slurry is pumped to the filtrate sump V-320. The two tanks are used alternately so that when one tank becomes empty, the other tank is put into service and the empty tank gets refilled.

Hydrated Lime Feed to the Absorber

During normal operation, the concentration of fly ash in the slurry is kept below 2 g/l to avoid any reduction in limestone reactivity. If the fly ash concentration increases, it reduces limestone reactivity, which results in an increase in the outlet SO_2 concentration as well as in a reduction in the pH value of the absorber recirculating slurry.

This situation can happen if a large amount of fly ash is introduced into the absorber as a result of an upset of the ESP, an accumulation of fly ash in the process due to a malfunction of the thickener, or a misoperation.

Once limestone reactivity is inhibited, it cannot be improved by the addition of fresh limestone. The only way improvement can be made is by the addition of a strong alkali. For this purpose, a hydrated lime feed system is incorporated in this plant. As soon as the above situation develops, the hydrated lime feed system is put into service.

Hydrated lime is raked out of the silo by a rotary feeder and fed to the screw pump (M-530A or B) under operation via an airslide conveyor and then pneumatically transferred to the absorber together with the limestone powder. Between the airslides and the M-530A/B hoppers is a manual knife gate for circuit isolation and for prevention of pressure feedback between the two airslides. The feed rate is changed by varying the speed of the rotary feeder; the feed rate is controlled by the signal which is integrated in the sulfur emission control loop. During the hydrated lime feeding period, the limestone feed rate is adjusted to supply the required amount of alkali according to process conditions.

2.3 Proprietary Information

There is no information in this report that is considered to be proprietary.

2.4 Stream Data

See Figure 2-1 on page 2-4 for location of material balance points.

STREAM DATA

Conditions: Fuel = Coal
SO_2 Removal Efficiency = 95.0%

Relevant PFD No.: Figure 2-1

1. Gas

Stream No.	Flow Rate (SCFM)	Temp. (°F)	H_2O (Vol. %)	SO_2 (ppm-d)	Dust (grains/SCF-d)	Remarks
A	1,416,900	257.2	10.45	3,055		
B	1,537,800	132.4	16.13	150		
C	23,000	133.6	1.60	0		Air

2. Liquid and Solid

Stream No.	Flow Rate (gpm)	Flow Rate (TPH)	Temp. (°F)	Slurry Conc. (wt%) *3	Density (lb/gal)	Remarks
101	242,154.0	67,537.9	132.4	20.0	9.30	
102	983.1	274.2	132.4	20.0	9.30	
301	282.7	56.6	116.2	90.0	6.68 *1	*2
302	418.7	104.8	116.2	1.8	8.34	
303	711.9	177.6	116.2	1.1	8.31	
304	1,014.8	252.7	116.2	0.9	8.30	
305	372.5	92.4	116.2	0.3	8.27	*4. S. S. Conc. 500 ppm
306	46.2	12.4	116.2	13.0	8.92	
307	302.5	75.1	116.2	0.3	8.27	S.S. Conc. 500 ppm
308	70.4	17.5	116.2	0.3	8.27	S.S. Conc. 500 ppm
501	136.9	30.9	68.0	100.0	7.51 *1	as 100% $CaCO_3$
601	11.2	2.8	59.0	0.0	8.34	
602	50.7	12.7	59.0	0.0	8.34	
603	0.4	0.1	59.0	0.0	8.34	
604	259.2	64.8	59.0	0.0	8.34	
605	400.7	100.2	59.0	0.0	8.34	
606	0.4	0.1	59.0	0.0	8.34	
801	0.0	0.0	68.0	100.0	7.51 *1	as 100% $Ca(OH)_2$
802	0.0	0.0	59.0	10.0	8.83	
803	0.4	0.1	59.0	10.0	8.83	

*1 Bulk density
*2 Not including limestone inert
*3 Slurry concentration include dissolved solid as well as suspended solid.
*4 Suspended solids concentration.

2.5 Process and Instrumentation Diagrams

Process and instrumentation diagrams are given in Appendix A.

3.0 UPDATE OF THE PUBLIC DESIGN REPORT

3.1 Design and Equipment Changes

A revised equipment list is given in Appendix B.

3.1.1 Dewatering System Centrifuge Chute Modifications

Many of the design changes associated with the operation of the AFGD system were in the area of material handling. The flow characteristics of synthetic gypsum differ from those of natural rock gypsum. The residence time in the system and the type of fly ash affect the flow characteristics of the gypsum. The first problem encountered in handling the gypsum was its flow characteristics in chutes leaving the centrifuge area. It was necessary to modify the angle as well as the orientation of the chutes and to add "air cannons," which are devices that release surges of air on a routine basis, and thereby eliminate the bridging of the gypsum in the chutes.

3.1.2 Filtrate Sump Ventilation

Even though housekeeping is normally not thought of as a critical element to reliability, good housekeeping practices do in fact lead to higher on-stream time and to a better safety record. One of the nuisance problems associated with the operation of the dewatering system was the generation of water vapor. The filtrate separated from the gypsum slurry has a temperature of approximately 150°F. At this temperature the system generated large quantities of water vapor, which condensed on cold lines and raised the humidity in the building to nearly 100%, resulting in a severe maintenance problem due to localized corrosion. A blower was added to the system to pull a vacuum on the filtrate sump; however, it had insufficient capacity to handle all of the water vapor due to the large volume of air incursion. A second modification to the system involved elimination of the traditional tub assembly to catch filtrate from the centrifuges; the tubs were replaced with a sealed piping system which reduced the air infiltration. As a result of the piping changes, the modifications to the vent system worked and the humidity in the dewatering building was greatly reduced.

3.1.3 Absorber Sidemount Agitators

Inspection of the absorber tank revealed that large deposits of gypsum had settled in the neutralization tank, causing problems for cleaning the tank. One concern of single large modules is the problem of solids handling generated during an outage. The neutralization tank could easily hold 100 tons of settled gypsum solids that would have to be removed by hand. The problem with the neutralization tank was that there were "dead corners" where there was insufficient agitation. Two sidemount agitators were added

to both sides of the neutralization tank. As a result of this modification, there now is virtually no solids build-up in the tank.

3.1.4 Maintenance Access Doorway

The size of a single 600 MW module caused some difficulties with maintenance activities such as resin lining inspection and repair. The original design of the absorber tank called for small access manways 24 inches in diameter, but these small access ways interfered with the efficient maintenance of the scrubber module. A large rectangular doorway 6 feet by 8 feet was installed in the sidewall of the scrubber to accommodate personnel and rubber tired vehicles such as scissor lifts used for inspection.

3.1.5 WES Modifications

The original concept of high pressure atomization was considered to be the most cost effective method for a 3 year demonstration period; however, the difficulties of operation of the single fluid system precluded its continued use. The analysis of the performance of a single fluid nozzle showed several areas of concern with the long term operability. One major problem with the spray head design with multiple nozzles was the interference of the spray patterns from individual nozzles, and the interference was verified using laser particle size measurement techniques. Measurement of the spray patterns showed coalescence of the droplets. These large particles were greater than 100 microns, traveled ballistically and impacted the floors and walls, causing a buildup of solids. The conclusion reached from the first demonstration period was that the reliability of the single fluid nozzle was not sufficient to continue with its use. The single fluid nozzle was changed to a dual fluid nozzle design, thus ensuring a consistent particle size distribution of less than 50 microns.

3.1.6 Absorber Spray Header Modifications

The absorber module has two separate slurry headers for the circulation of slurry to the absorber tower. There is a lower and an upper header. During the commissioning of the unit it was observed that the spray height of the upper header was higher than design, and the spray was in fact impinging into an area of the absorber that did not have corrosion resistant coatings. The height of the recirculating slurry was reduced by adding more nozzles to the main headers in the tower.

3.1.7 PowerChip® Gypsum

Although none of the gypsum from this project has been landfilled, in the past, most FGD by-product gypsum produced in the U.S. has been landfilled. One of the reasons for landfilling by other FGD projects was

that the material produced was the consistency of wet sand, and was very difficult to handle. PowerChip® Gypsum involves the reformulation and modification of the physical structure of the by-product gypsum to avoid that problem.

This demonstration program produced 5-7 tons/hour of stable, semi-dry, agglomerated flakes of calcium sulfate dehydrate which were 1/8" to 1/4" thick and 3/8" to 1-1/4" in length and width. This densified agglomerated and flaked structure was more suitable and more easily handled for direct utilization in existing cement plants. The material was hauled in hopper trucks or hopper rail cars and stored in bins and silos which were designed for and are currently operated on 2" x 0" natural rock gypsum without costly equipment modification associated with handling other forms of FGD gypsum.

The technology includes the commercial use of a mechanical agglomeration machine to compact the small, finely divided, moist crystals of calcium sulfate dehydrate into larger reformulated flakes which are stable, more free flowing and less dusty in transfer and processing.

Another feature of the program was to mix FGD gypsum together with fly ash and FGD wastewater plant solids. The use of this product by cement companies recycled another, formerly landfilled waste, into a usable product.

In essence, current FGD technology enables continued burning of high sulfur coal and compliance with environmental regulations, while producing an industrial gypsum product. Adding a PowerChip® process to the FGD technology enhances the entire system by producing an industrial substitute for natural rock gypsum which may be used more easily in existing cement and wallboard plants.

3.1.8 PowerChip® Program

This new PowerChip® Gypsum program, started up January 1994, demonstrated the technology, validated the scale-up to commercial operation, developed a value added market-driven industrial product gypsum, and demonstrated the actual performance of this environmentally acceptable form of industrial gypsum.

This program produced test and commercial lots of PowerChip® gypsum for trials at various cement and wallboard plants. Approximate capacity of this demonstration unit was 5-7 tons/hr.

This program was conducted over an 18 month period and produced about 8,000 tons of PowerChip® product for test purposes. In simplified terms, this program's objectives were as follows:

- validation of technology and scale-up
- optimization of physical performance of the chip product
- reduction in processing costs and energy by integration within the power plant
- improvement in durability of chips
- collection of performance data on actual test runs in commercial plants

Two unique features of this program are the capability of blending coal fly ash and wastewater treatment sludge into the industrial gypsum at low levels for several specific end users and their testing of this co-product.

3.1.9 Description of Pressure Roll Forced Compaction Used in PowerChip® Process

The agglomeration of FGD gypsum has passed from the lab through pilot plant tests using several pieces of machinery designed and applied to other industries and other minerals. Previously, Pure Air had produced in its laboratories agglomerated gypsum chips on three different machines, from industrial gypsum crystals at 88% to 94% solids concentration and an average particle size of 40 microns. The importance of the demonstration program was confirmation of scale-up, including the optimum compacting force and the curing time/temperature relationship.

The novel process feature observed was that the developed strength of the agglomerated chips approaches that of natural rock gypsum. The concepts used to develop this technology were based on the models for metal rolling and followed observations and experiences in the compaction of metal powders and inorganic minerals in roll presses. Based on experimental observations, it was determined that during rotation of rolls, there is a layer of the material moving together with each roll. The nip angle is defined as where these two layers meet. It was confirmed that above the nip angle of the compaction rolls, peripheral velocity is higher than the velocity of material to be compacted, and below the nip angle, slip between material and roll surface vanishes. In this model, one basic conclusion was to use smooth rolls and to consider only planar stress relations. The value of nip angle according to this model depends only on the material properties and is not affected by roll diameter, roll gap and stress conditions in the material being compacted. In this case, the value of the nip angle depends on material properties, precompaction pressure, and on roll diameters. To determine the pressure distribution in the nip region, the elementary layer of material trapped at the position of nip angle must be compressed between the rolls with constant incremental thickness. The pressure at a point in the nip region can then be determined by pressure-density relationships

obtained experimentally. To determine the characteristics of the pressure exerted by the rolls upon the compacted material, the balance of forces acting upon an elementary section of the material was evaluated. From this balance, a relationship was obtained which linked the properties of the compacted material with the design parameters of the pressure roll forced compaction mill.

For high ranges of compaction pressure, industrial gypsum performs as a solid body and then shear strength is equal to the shear yield stress of the compacted chip product. The angle of release was experimentally determined from the elastic expansion ratio of the product. A compression tester and the angular shear-friction "tester" were used to determine and record the characteristics of the gypsum being compacted.

3.2 Demonstration Plant Capital Cost Update

There were no major differences in capital cost between that actually expended on the demonstration plant and the estimate given in the project proposal.

TABLE 3-1 - MAJOR EQUIPMENT COSTS

ITEM NO.	ITEM NAME	COST/UNIT	SALES TAX/UNIT	FREIGHT COST/UNIT	INSTALLATION COST/UNIT	TOTAL COST/UNIT	NUMBER OF UNITS	TOTAL COST	PURCHASE YEAR
	Absorption:								
A-120	Air Rotary Sparger	$595,479		$17,864	$1,488,698	$2,102,041	3	$6,306,123	1991
B-100	Oxidation Air Blower	$388,002		$11,640	$970,004	$1,369,645	2	$2,739,291	1991
E-120	Mist Eliminator	$171,547		$5,146	$428,868	$605,561	1	$605,561	1991
P-120	Recirculation Pump	$108,838		$3,265	$272,094	$384,197	12	$4,610,364	1991
P-125	Adsorber Bleed Pump	$15,936		$478	$39,839	$56,252	2	$112,505	1991
T-120	Absorber Tank	$2,051,619		$81,549	$5,129,000	$7,242,168	1	$ 7,242,168	1991
	Subtotal Absorption							$21,616,010	
	Dewatering:								
C-310	Belt Conveyor	$204,828		$6,145	$512,070	$723,043	2	$1,446,086	1992
M-300	Centrifuge	$207,934		$6,238	$519,836	$734,008	9	$6,606,074	1991
P-320	Filtrate Sump Pump	$35,855		$1,076	$89,638	$126,568	2	$253,136	1991
P-330	Underflow Pump	$3,541		$106	$8,853	$12,501	3	$37,503	1991
P-340	Overflow Pump	$19,920		$598	$49,799	$70,316	2	$140,632	1991
P-350	WES Pump	$73,267		$2,198	$183,168	$258,633	1	$258,633	1991
P-370	Centrifuge Feed Pump	$15,936		$478	$39,839	$56,252	2	$112,505	1991
V-300	Centrifuge Head Tank	$85,244		$2,557	$213,110	$300,911	1	$300,911	1991
V-320	Filtrate Sump				$226,900*	$226,900	1	$226,900	1991
V-330	Filtrate Thickener	$376,706		$11,301	$941,765	$1,329,772	1	$1,329,772	1991
V-340	Thickener Overflow Tank	$78,811		$2,364	$197,028	$278,203	1	$ 278,203	1991
	Subtotal Dewatering							$10,990,354	
	Limestone Preparation:								
B-510	Limestone Transfer Compressor	$5,188		$156	$12,969	$18,312	2	$36,624	1991
M-500	Silo Rotary Feeder	$90,108		$2,703	$225,269	$318,079	2	$636,159	1991
M-530	Screw Pump	$90,108		$2,703	$225,269	$318,079	2	$636,159	1991
V-500	Limestone Silo				$967,227*	$967,227	2	$1,934,454	1990
B-520	Limestone Unloading Blower	$51,008		$1,530	$127,519	$180,057	3	$ 540,171	1991
	Subtotal Limestone Prep.							$3,783,567	

*This includes total cost to install.

TABLE 3-1 - MAJOR EQUIPMENT COSTS
(continued)

ITEM NO.	ITEM NAME	COST/UNIT	SALES TAX/UNIT	FREIGHT COST/UNIT	INSTALLATION COST/UNIT	TOTAL COST/UNIT	NUMBER OF UNITS	TOTAL COST	PURCHASE YEAR
	Sumps:								
P-700	Absorber Sump Pump	$21,248		$637	$53,119	$75,004	2	$150,007	1991
V-700	Absorber Sump				$50,501	$50,501	1	$50,501	1990
P-710	Absorber Hold Tank Pump	$10,624		$319	$26,560	$37,503	1	$37,503	1991
V-710	Absorber Hold Tank	$463,956		$13,919	$1,159,890	$1,637,765	1	$1,637,765	1991
P-720	Thickener Sump Pump	$21,247		$637	$53,118	$75,002	1	$75,002	1991
V-720	Thickener Sump				$252,910	$252,910	1	$252,910	1991
P-730	Absorber Hold Tank Pump	$5,312		$159	$13,280	$18,751	1	$18,751	1991
V-730	Absorber Hold Tank Sump				$11,660	$11,660	1	$ 11,660	1990
	Subtotal Sump							$2,234,099	
	Additive:								
B-810	Hydrated Lime Tfr. Blowers	$11,242		$337	$28,105	$39,684	3	$119,053	1991
M-800	Lime Feeder	$21,709		$651	$54,273	$76,633	1	$76,633	1991
V-800	Hydrated Lime Silo	$60,148		$1,804	$150,370	$212,322	1	$212,322	1991
	Subtotal Additive							$408,008	
	Other:								
	Agitators	$28,696		$861	$71,740	$101,297	8	$810,375	1992
P-600	Quench Pump	$71,536		$2,146	$178,840	$252,522	1	$ 252,522	1992
	Subtotal Other							$ 1,062,897	
	Grand Total Equipment							$40,094,935	

*This includes total cost to install.

TABLE 3-1 - MAJOR EQUIPMENT COSTS
(continued)

ITEM NO.	ITEM NAME	COST/UNIT	SALES TAX/UNIT	FREIGHT COST/UNIT	INSTALLATION COST/UNIT	TOTAL COST/UNIT	NUMBER OF UNITS	TOTAL COST	YEAR
	Other Project Costs:								
	Engineering							$12,160,036	
	Civil Construction							$3,300,029	
	Insulation/Painting/Paving							$1,840,000	
	Wastewater Treatment Facility							$4,942,000	
	Home Office Costs							$4,726,000	
	Cost of Money							$12,864,000	
	G & A							$ 6,643,000	
	Total Other Project Cost							$46,475,065	
	NIPSCO Plant Modifications:								
	Engineering							$2,869,000	
	Capital Modifications							$14,145,000	
	Total NIPSCO Plant Modifications							$17,014,000	
	Grand Total Equipment/Engineering/Construction/Plant Modifications							$103,584,000	

3.3 Demonstration Plant Operating Cost Update

TABLE 3-2 SUMMARY OF FIXED OPERATING COSTS

	Average Annual Cost, $/yr	Yr1	Yr2	Yr3
Operating Labor Cost Details				
. Total Annual Operating Labor Cost	$1,791,400	1,716,000	1,840,500	1,817,700
. Total Annual Maintenance Labor Cost	$ 743,200	687,500	630,000	912,000
. Total Annual Maintenance Material Cost	$1,113,000	1,028,500	942,400	1,368,000
. Total Annual Administrative and Support Labor Cost	$ 560,000	572,000	507,000	602,000
. Total Annual Fixed O&M Cost	$4,207,600	4,004,000	3,919,900	4,699,700

TABLE 3-3 VARIABLE OPERATING COST

Commodity	Unit	$/Unit	Quantity/hr	Cost $/hr
Limestone	tons	25.51	18.4	469.38
Power	kWhr	.003	6,370	204.00
Chem & Lubes				2.60
Total Variable Operating Cost				675.98

Total planned operating hours for demonstration 19,710
75% Availability Capacity Factor used for the power station

4.0 DEMONSTRATION PROGRAM

4.1 Test Plans

4.1.1 Short-Term Tests (Average Duration - 30 Days)

Six short-term tests were conducted during the three year demonstration program. These tests were used to evaluate the performance of the AFGD system with different coals. Coals were combusted having sulfur contents of 2.0%, 2.5-3.0%, 3.0-3.5%, 3.5-4.0%, and 4.5% sulfur in coal. Table 4-1 details the parameters used in the testing effort.

Table 4-1 Short-Term Testing Parameters

Parameter	Minimum	Maximum
Sulfur Content, %	2.0	4.5
Load, MW	140	540
Ca/Sulfur Molar Ratio	1.01	1.07
L/G (Liquid to Gas) Ratio, gal/1,000 ACF	50	128
Oxidation Air Rate, scfm	10000	20000

The major parameter investigated in the test program was the sulfur content of the coal; five coals were selected to span the range from 2.0% to 4.5%. This range was selected to represent the typical range of sulfur content in the Midwest. The endpoints of this range present their own particular problems in the operation of a FGD facility. The high range sulfur coal offers the challenge of meeting the design requirement for the scrubber. This is where the accuracy of design correlations is tested. The lower end is not a test of the absolute ability to scrub since the unit is operated quite a distance from its maximum performance capability; however, the ability of the model to predict performance is important. The prediction of a lower than actual performance causes higher capital expenditures to be made; conversely a model that predicts higher than actual performance will cause insufficient capital to be spent and also runs the risk that contract obligations will not be met. A secondary issue that comes with the operation of the scrubber with low sulfur coals is the purity of the by-product gypsum. A wet limestone scrubber operating on high sulfur coal produces a higher quality gypsum compared to burning low sulfur coal due to the higher sulfur to fly ash ratio in the system. For any given fly ash loading, the high sulfur coal produces more pounds of calcium sulfate per pound of fly ash; consequently, the by-product gypsum has a higher purity.

The other parameters represent operating conditions for each sulfur level. The range of 140 MW to 540 MW was the power generation available at the demonstration facility. The calcium/sulfur reagent ratio range was set at 1.01 to 1.07 (Ca/sulfur ratio is the moles of calcium in the reagent feed to the absorber divided by the moles of SO_2 removed in the scrubber). The maximum of 1.07 is set by the total purity requirements of the product gypsum, which contains unreacted limestone.

The parameter of L/G ratio was investigated in the 50 to 128 gal/1,000 acf range, where 50 represented the minimum turndown capability for the facility based on solids settling rates in the slurry and full wetting of the internal packing grid. The maximum of 128 was selected based on the judgment that the L/G effects level out and do not significantly impact scrubber performance.

A general objective of the testing was to fill the gaps for SO_2 removal technology at high sulfur loadings and large module configurations.

4.1.2 Long-Term Tests

Three tests associated with the program were identified as long term. They are provided in Table 4-2.

TABLE 4-2
LONG-TERM TESTS

Test No.	Name of Test	Objective	Duration
1	Normal	Daily Monitoring	40 weeks
2	Wastewater Evaporation System	Check Operation of WES	3x 2 Weeks
3	Maintenance Evaluation	Baseline Maintenance Information	156 Weeks

Test number 1 consisted of daily monitoring of the condition of the facility as related to such conditions as load factor and process conditions. These results are summarized in Appendix G.

Test number 2 consisted of three separate tests that were conducted to determine the "status" of the WES unit during the course of the three year operation.

Test number 3 was one of the most challenging of the program since rather extensive documentation of maintenance activities at the facility was required. The documentation was accomplished through the use of a personal computer (PC) based maintenance management system. The data base was structured to meet the reporting needs of the test plan.

4.2 Operating Procedures

4.2.1 Instrumentation and Data Acquisition

The AFGD unit was built using a DCS, which represents the current state of the art in plant operation. Every important variable in plant operation is monitored and recorded. These data are instantly available to the plant operator via a computer terminal. Process readings are converted by the electronic system into digital signals that are transmitted on a plant loop or data highway, where the data can be accessed when needed. A commercially available product was chosen as a data logger that could easily access the DCS and move data into computer files that could be manipulated. The most important variables were identified, and the data logger was configured to read and save the data points onto a PC hard disk.

The plant was equipped with a LAN (Local Area Network) to which the data logger was connected. Software was written that transferred the data from the data logger onto the LAN hard drive, where the data were accessible by anyone on the LAN. It is more and more common for data manipulation to be done with a spreadsheet program. In the case of this facility, EXCEL was chosen due to its powerful macro language capability. Several large EXCEL macros were written to handle data manipulation. The access to plant data was readily automated through the use of a DCS system. Table 4-3 shows the list of variables that are scanned by the data logger. Table 4-4 lists the continuous analyzers used in the demonstration project.

TABLE 4-3
DATA LOGGER
SCANNED VARIABLES

	DCS Signal		Units
1	Time		
2	NI Air Flow #7	NI Air Flow	lb/hr
3	NI Air Flow #8	NI Air Flow	lb/hr
4	NI MW LD #7	NI MW Load	MW
5	NI MW LD #8	NI MW Load	MW
6	AI-110A	Unit #7 Fluegas Opacity	%
7	AI-110B	Unit #8 Fluegas Opacity	%
8	PT-105A	#7 Duct Pressure	"H2O
9	PT-105B	#8 Duct Pressure	"H2O
10	PT-117	Pressure Before Mist Eliminator	"H2O
11	PT-118	Pressure After Mist Eliminator	"H2O
12	TI-209	#8 Duct Upstream WES	F
13	TR-111	Flue Gas Inlet FGD Temperature	F
14	AIT-109	SO2 Inlet FGD	PPM
15	FR-112	Flue Gas Flow	MSCFM
16	SIC-425A	Limestone Feed to Absorber	Stons/hr
17	SIC-425B	Limestone Feed to Absorber	Stons/hr
18	SIC-399	Limestone Feed to Absorber	Stons/hr
19	AR-126	SO2 Outlet	PPM
20	FIC-127	Absorber Make-up Flow	gpm
21	LI-129-01	Absorber Level	ft
22	LI-129-02	Absorber Level	ft
23	LI-146	Cntrifg Fd Tank	%
24	AIC-134	Slurry Den.	GM/ML
25	AIC-138A	Slurry pH	pH
26	AIC-138B	Slurry pH	pH
27	AIC-136	Slurry Sulfite	MMOL/L
28	AIT-135	Slurry Carbonate	MMOL/L
29	PI-147A	"A" Header Pressure	psig
30	PI-147B	"B" Header Pressure	psig
31	LI-194	Filtrate Sump Level	%
32	AIT-190A	Filtrate Sump pH	pH
33	AIT-190B	Filtrate Sump pH	pH
34	FI-212	WES Water Flow	gpm
35	LI-220	Thickener Overflow Tank Level	%
36	AIT-221	Wastewater Chloride	PPM
37	FI-216	Wastewater Flow to Wastewater Treatment Facility	gpm
38	FI-236	Thickener Underflow to Wastewater	gpm
39	LI-239	Absorber Sump Level	%
40	LI-200	Absorber Hold Tank Sump	%
41	LI-203	Absorber Hold Tank	%
42	LI-206	Thickener Sump Level	%
43	FI-264	Total Water to Facility	gpm
44	FQI-264	Totalized Water	gal
45	FIC-344	Air to FAS	scfm
46	FIC-345	Air to ARS	scfm

TABLE 4-3 (continued)

	DCS Signal		Units
47	WI-455	Gypsum Weight	tons
48	WQI-455	Gypsum Total Weight	ktons
49	PI-023	Limestone Xfer "A"	psig
50	PI-028	Limestone Xfer "B"	psig
51	PDI-114	Absorber Differential Pressure	H2O"
52	PDI-115-01	Total FGD Differential Pressure	H2O"
53	PDI-116	M/E Differential Pressure	H2O"
54	PI-147A	Rec Hdr "A" Pressure	psig
55	PI-147B	Rec Hdr "A" Pressure	psig
56	PI-214	WES Nozzle Press.	psig
57	PI-300	Oxidation Air Press	psig
58	UI-152	Number of Pumps Running	#
59	IL153A	Rec Pump (P-120A) Amps	amps
60	IL153B	Rec Pump (P-120B) Amps	amps
61	IL153C	Rec Pump (P-120C) Amps	amps
62	IL153D	Rec Pump (P-120D) Amps	amps
63	IL153E	Rec Pump (P-120E) Amps	amps
64	IL153F	Rec Pump (P-120F) Amps	amps
65	IL153G	Rec Pump (P-120G) Amps	amps
66	IL153H	Rec Pump (P-120H) Amps	amps
67	IL153I	Rec Pump (P-120I) Amps	amps
68	IL153J	Rec Pump (P-120J) Amps	amps
69	IL153K	Rec Pump (P-120K) Amps	amps
70	IL153L	Rec Pump (P-120L) Amps	amps
71		WAC Amps	amps
72	IL340B	B-111B Amps	amps
73	IL340C	B-111C Amps	amps
74	IL340D	B-111D Amps	amps
75	Power Var	Northern Ind. Var. Hor	KVA
76	NI KWH	N.I. Watt Hour	KWH
77	NI KWH	N.I. Watt Hour	KWH
78	KI-001C	#7 Unit Hours On-Stream	hrs
79	KI-001D	#8 Unit Hours On-Stream	hrs
80	IL-355A	"A" ARS Amps	amps
81	IL-355B	"B" ARS Amps	amps
82	IL-355C	"C" ARS Amps	amps
83	TISH-210	#8 Duct Downstream WES	F
84	TISH-213	#8 Duct Downstream WES	F
85	NI-SO2-Eff	SO2 Removal Eff.	lb/MMBtu
86	FIC-191	Feed to Thickener	gpm
87	TR-124-03	FGD Outlet Temp	F
88	AI-1001	New/Desat Tank pH	pH
89	AI-102	WWTR Outlet pH	pH
90	LI-429A	A Silo Level	%
91	LI-429B	B Silo Level	%
92		#7 Damper Open	yes/no
93		#8 Damper Open	yes/no

TABLE 4-4
CONTINUOUS PROCESS ANALYZERS

A1-110A	Unit 7 Opacity Analyzer
A1-110B	Unit 2 Opacity Analyzer
AR-126	AFGD Inlet SO_2
AIT-134	AFGD Outlet SO_2
AIC-138A	Absorber pH
AIC-138B	Absorber pH
AIC-136	Absorber Carbonate Analyzer
AIT-135	Absorber Sulfite Analyzer
AIT-190A	Filtrate Sump pH
AIT-190B	Filtrate Sump pH
AIT-221	Filtrate Sump Chloride Analyzer

4.2.2 Test Methods

In order to evaluate the AFGD system performance, the following streams (see Figure 2-1) were analyzed:

Stream No.	Location I.D.	Parameters Tested
N/A	Coal from Units 7 & 8	Ultimate and proximate analysis
A	Absorber Inlet	Temperature, moisture, oxygen, CO_2, particulate, SO_2, NOx, SO_3, HCl, HF
B	Stack Inlet	Temperature, moisture, oxygen, CO_2, particulate, SO_2, NOx, SO_3, HCl, HF
101	Absorber Slurry	Temperature, pH, density, solids content, sulfite, calcium, sulfate, carbonate, Mg, F, Cl
302	Gypsum	pH, free moisture, water of hydration, calcium, sulfate, carbonate, Mg, F, and Cl
303	Filtrate Sump Slurry	Same as absorber slurry
304	Thickener Overflow	Same as absorber slurry
307	Thickener Underflow	Same as absorber slurry

It should be pointed out that the testing procedures for streams A and B follow the EPA test methods (such as EPA Methods 1, 2, 3, 4, 5B, 6C, 8, 26, 29 and ASTM D3226-73T). For all other analytical test procedures, see Appendix D.

4.3 Analyses of Feed Stocks, Products and Reagents

The summary of coal, limestone, gypsum and ash analysis used during the DOE demonstration test program is included in Tables 4-5 through 4-8.

For detailed analyses of coal (both ultimate and proximate as well as higher heating value and type of coal) and gypsum, please refer to DOE Test Reports #1 through #5.

TABLE 4-5
COAL ANALYSIS

	DOE Demo I (S=2.25%)	DOE Demo II (S=2.75%)	DOE Demo III (S=3%)	DOE Demo IV (S=4%)	DOE Demo V (S=4.5%)
Carbon	66.56	61.61	62.1	59.14	69.32
Hydrogen	4.5	4.39	4.09	4.37	4.94
Nitrogen	1.44	1.23	1.22	1.26	1.17
Sulfur	2.21	2.91	3.21	3.79	4.73
Oxygen	6.71	7.45	8.19	7.19	5.63
Chlorine	0.14	0.1	0.06	0.03	0.07
Moisture	8.6	12.92	11.14	13.72	4.74
Ash	9.53	9.63	10.1	10.7	9.3
Btu/lb.	11,932	11,022	10,874	11,000	12,700

TABLE 4-6
LIMESTONE ANALYSIS

	DOE Demo I (S=2.25%)	DOE Demo II (S=2.75%)	DOE Demo III (S=3.1%)	DOE Demo IV (S=4.0%)	DOE Demo V (S=4.5%)
Acid Insoluble (%)	0.52	0.42	0.49	0.57	0.45
SiO_2 (%)	0.35	0.16	0.25	0.28	0.22
$CaCO_3$ (%)	97.78	97.91	97.70	97.21	97.86
$MgCO_3$ (%)	1.33	1.21	1.48	1.92	1.46
Al_2O_3 (%)	0.17	0.17	0.16	0.18	0.14
Fe_2O_3 (%)	0.07	0.06	0.06	0.07	0.07
Moisture (%)	0.1	0.1	0.1	0.1	0.1

TABLE 4-7
GYPSUM ANALYSIS

Ultimate Analysis (As Rec'd Weight %)

	DOE Demo I (S=2.25%)	DOE Demo II (S=2.75%)	DOE Demo III (S=3%)	DOE Demo IV (S=4%)	DOE Demo V (S=4.5%)
Gypsum ($CaSO_4 \cdot 2H_2O$, %)	96.7 - 99.7	96.3 - 99.4	94.6 - 98.8	93.5 - 97.3	95.6 - 99.7
Calcium Carbonate ($CaCO_3$, %)	0.7 - 2.8	0.4 - 2.8	1.5 - 3.7	0.4 - 4.5	1.6 - 2.9
Chloride (Cl, ppm)	<20 - 37	<20 - 38	<20 - 38	9 - 148	<20 - 37
Magnesium Oxide (MgO, %)	0.04 - 0.17	0.04 - 0.2	0.08 - 0.23	0.08 - 0.51	0.08 - .21
Free Moisture (%)	4.6 - 7.8	4.3 - 8.4	3.7 - 8.4	4.2 - 8.8	5.8 - 9.6

TABLE 4-8
FLY ASH TRACE METAL ANALYSIS

Sample Date	05/06/94	05/10/94	05/28/94
	µg/g	µg/g	µg/g
Aluminum (AI)	99629	94759	90206
Antimony (Sb)	.78	.57	.44
Arsenic (As)	66.7	46.8	46.7
Barium (Ba)	627	627	627
Beryllium (Be)	<20.0	<20.0	<20.0
Boron (B)	3000	26620	2316
Cadmium (Cd)	<20.0	20.0	20.0
Calcium (Ca)	29021	20586	25733
Chromium (Cr)	260	360	240
Cobalt (Co)	200	<200	200
Copper (Cu)	200	220	180
Cyanide	<250	<250	<250
Fluorine (F)	24.0	17.2	17.2
Iron (Fe)	135385	125874	133846
Lead (Pb)	260	<100	140
Lithium (Li)	45.0	32	40.0
Magnesium (Mg)	6273	6152	6031
Manganese (Mn)	126	126	126
Mercury (Hg)	<.015	<.15	<0.15
Molybdenum (Mo)	<1400	<1400	<1400
Nickel (Ni)	140	860	160
Potassium (K)	22573	20747	21577
Selenium (Se)	10.7	5.71	5.29
Silicon (Si)	231884	223469	226274
Silver (Ag)	<20.0	20.0	<20.
Sodium (Na)	6825	11276	10386
Tin (Sn)	2.00	12.0	2.00
Titanium (Ti)	7554	7434	7314
Vanadium (V)	400	400	200
Zinc (Zn)	1080	1220	760

4.4 Data Analysis Methodology

The data acquired during the normal operation of the AFGD outside the six short term tests are from continuous monitoring equipment. The data are monitored by the plant computer system, and deviations from expected results are investigated immediately; as a result, there is very little data rejection in the database. As an example, the circulating slurry pH is monitored by two pH meters, AIC-138 A&B. If these devices show a deviation from each other of more than 5%, the cause is investigated and corrected. The SO_2 inlet and outlet meters are EPA certified devices and as a result have daily calibration checks. The daily data composite was examined to determine consistency with operating parameters (i.e., expected performance compared to measured performance).

The raw data are taken in 5 minute increments and converted to a 1 hour average and then to a 24 hour average by the EXCEL macro shown in Appendix E. The material balance for the plant is calculated by the EXCEL spreadsheet shown in Appendix F.

4.5 Data Summary

The data summary for the AFGD for the period 6 June 1992 to 12 June 1995 is presented in Appendix G.

The following data associated with the operation of the FGD are considered to be important. Data were gathered at a 5 minute scan rate and summarized as one hour averages, then reduced to 24 hour averages. The total number of data points scanned was larger than needed for the monitoring of the technology, but was used for maintenance functions as well. The monitoring data can be divided into several areas of detail:

Megawatt Load
Sulfur in Coal
SO_2 Inlet Concentration

Power Consumption
Inlet Gas Temperature
Facility Pressure Drop
SO_2 Outlet Concentration
SO_2 Removal Rate
Calcium Carbonate Level
Number of recirculating pumps
Gypsum Purity
Limestone Feed Rate

Certain variables, though important, are not directly measured and are not reported. These variables are Ca/S (calcium/sulfur ratio) and L/G (liquid to gas ratio). The "G" in L/G is calculated by multiplying 22,000 gpm times the number of recirculating pumps that are in operation.

4.6 Operability and Reliability

A detailed fault tree analysis of potential failure modes was conducted during the design phase of the project, and as a result, design modifications were made that would help avert the impact of process upsets on the operation of the AFGD facility. The loss of electrical power to the AFGD system is the most significant event that can affect the operation of the facility. Loss of electrical power means the loss of slurry circulation in the scrubber module and the exposure of internal components to the high temperature of the inlet flue gas (350°F), which would cause resin liner damage and damage to the AFGD grid packing, and would result in extended outages. One of the key safety features of the facility is an emergency quench system that sprays water into the absorber flue gas stream above the grid packing. This spraying action would cool the inlet gas to a safe temperature; the quench continues until the absorber module can be safely secured. There is sufficient redundancy in other systems that the on stream factor has been above 98.0% for three years.

A careful review of the facility has been used to improve the potential reliability of the facility. The following original spare equipment was added to the facility:

Electrical Power	Dual high voltage feeders
Sump Pumps	One installed spare pump
Centrifuges	One installed spare centrifuge
Circulation Pumps	One installed spare pump
Limestone System	One installed spare system

4.6.1 Critical Component Failure Analysis

Table 4-9 summarizes the component failures that have occurred in the three year operating period.

TABLE 4-9
CRITICAL COMPONENTS FAILURE ANALYSIS

Plant Subsystem	Subsystem Component	No. of Failures	Time Period (hours)	MTBF(1) (hours)	MTTR(2) (hours)
Instrument Air					
	K-600A	5	26520	5304	0.95
	K-600B	5	26520	5304	9.10
	M-600A	5	26520	5304	4.40
	M-600B	6	26520	4420	3.33
	V-600	0	26520	0	0.00
Utility Water					
	P-610A	6	25413	4235	4.58
	P-610B	1	25413	25413	1.00
Limestone System					
	B-520A	11	25413	2310	3.29
	B-520B	1	25413	25413	16.00
	B-520C	10	25413	25413	4.10
	M-500A	1	25413	25413	7.00
	M-500B	0	25413	0	0.00
	M-530A	4	25413	6353	1.93
	M-530B	8	25413	3176	4.96
	Piping	4	25413	6353	4.08
Process Air					
	B-110A	6	25413	4235	3.92
	B-110B	1	25413	25413	4.00
ARS/FAS					
	A-120A	4	25775	6443	8.75
	A-120B	4	25775	6443	4.00
	A-120C	10	25775	2577	4.05
	NV-311A	2	25775	12887	3.50
	NV-311B	1	25775	25775	9.00
	NV-311C	0	25775	0	0.00
	NV-311D	1	25775	25775	8.00

(1) MTBF - mean time before failure
(2) MTTR - mean time to repair

TABLE 4-9
(continued)

Plant Subsystem	Subsystem Component	No. of Failures	Time Period (hours)	MTBF(1) (hours)	MTTR(2) (hours)
Expansion Joints					
	EXP-102	2	25413	12706	99.50
	EXP-103	1	25413	25413	12.00
	EXP-105	1	25413	25413	130.00
	EXP-106	1	25413	25413	4.00
	EXP-107	1	25413	25413	11.60
	EXP-108	1	25413	25413	12.00
	EXP-109	4	25413	6353	7.25
	EXP-110	1	25413	25413	12.00
Recirc Pumps					
	P-120A	4	25413	6353	30.25
	P-120B	5	25413	5082	8.20
	P-120C	6	25413	4235	4.50
	P-120D	3	25413	8471	34.17
	P-120E	7	25413	3630	5.29
	P-120F	6	25413	4235	32.08
	P-120G	9	25413	2823	21.67
	P-120H	3	25413	8471	2.67
	P-120I	0	25413	0	0.00
	P-120J	0	25413	0	0.00
	P-120K	3	25413	8471	28.83
	P-120L	4	25413	6353	26.00
Absorber					
	A-130A	4	25775	6443	2.69
	A-130B	7	25775	3682	2.43
	A-140A	4	25775	644	3.03
	A-140B	5	25775	5155	2.07
	T-120	10	25775	1356	16.37
Mist Eliminator					
	NV-159C	2	25413	12706	4.50
	NV-159D	1	25413	25413	3.75
	NV-159F	1	25413	25413	3.00
	NV-159H	1	25413	25413	3.00
	NV-159K	2	25413	12706	5.00
	NV-159L	2	25413	12706	3.75
	NV-159M	2	25413	12706	5.50
	NV-159N	3	25413	6471	8.67
	NV-159O	4	25413	25413	6.00
	NV-159Q	1	25413	6353	1.88

TABLE 4-9
(continued)

Plant Subsystem	Subsystem Component	No. of Failures	Time Period (hours)	MTBF(1) (hours)	MTTR(2) (hours)
Abs Bleed Pumps					
	P-125A	7	25509	3644	8.57
	P-125B	3	25509	8503	1.33
Cent Feed System					
	P-370A	6	25509	4251	6.76
	P-370B	3	25509	8503	2.33
Centrifuges					
	M-300A	36	25509	708	4.06
	M-300B	27	25509	944	5.13
	M-300C	50	25509	510	3.55
	M-300D	36	25509	708	5.20
	M-300E	30	25509	850	4.18
	M-300F	11	25509	2319	14.82
	M-300G	35	25509	728	3.55
	M-300H	35	25509	728	4.25
	M-300I	27	25509	944	5.68
Filtrate Sump					
	A-320	1	25413	25413	12.00
Overflow Tank					
	P-340A	4	25413	6353	8.88
	P-340B	7	25413	3630	8.57
Conveyor					
	C-310A	5	25509	5101	5.70
	C-310B	8	25509	3188	5.81
	C-311	11	25509	2319	6.18
Cooling Water					
	H-610A	1	25413	25413	0.50
	H-610B	1	25413	25413	1.50
Quench Pump					
	P-600	1	25413	25413	0.50
Electrical					
	Electgene	2	25413	25413	1.50

4.6.2 Critical Component Failure Discussion

- **Instrument Air**

Identification of Failed Component: M-600A Instrument Air Switching Valve

Instrument air failure constitutes one of the worst failure modes for the facility since the loss of instrument air results in the loss of control of all control valves and actuators in the facility. Unless special measures are taken, the valve and actuators will fail to their shelf state, i.e., their position with no air pressure.

One of the most significant failures occurred when a three way switching valve failed, which in effect closed off the supply of air to the system. The standby air compressor did not respond since the on line air compressor continued to run and no loss of instrument air was indicated to the control system.

Operation and Maintenance History

The switching valve had opened for 17,328 hours without failure.

Analysis of Cause of Failure

The failure of the valve was determined to be the use of improper materials of construction. The valve was manufactured with carbon steel which corroded in the wet environment of the instrument air system. The corrosion products caused the valve to stick in place thus blocking off the instrument air supply.

Action Taken to Overcome the Problem

The valve was replaced with one constructed of stainless steel.

Remarks/Recommendations/Additional Information

The materials of construction of the instrument air dryer system should be reviewed for compatibility.

- **Utility Water**

Identification of Failed Component: ST-1 Utility Strainer Valve

The utility water strainer system consists of two identical strainers and a switching valve. Only one strainer is in use at a time to allow

cleaning and maintenance of the other. The utility water strainer system protects the pipes, valves, and pumps of the utility water system from damage due to sand and other foreign matter in the utility water.

One major failure occurred when the linkage to the switching valve broke. This failure limited the system to only one filter until the valve could be repaired.

Operation and Maintenance History

The utility water strainer valve had operated for 14,832 hours without failure.

Analysis of Cause of Failure

The failure was caused by foreign matter trapped in the filter which backed up into the switching valve workings. When it was attempted to switch filters, the obstruction jammed the valve workings and broke the linkage.

Action Taken to Overcome the Problem

The valve linkage was replaced and the valve returned to service.

Remarks/Recommendations/Additional Information

The filters are now switched on a daily basis to ensure the valve linkage remains clear.

- **Limestone**

Identification of Failed Component: NV-21A Silo Valve

A steady supply of limestone to the absorber is critical to gypsum purity and SO_2 removal. Failure of the limestone silo valve effectively eliminates half of the limestone reserves by making it impossible to remove limestone from one of the two silos at the facility. This could become a serious problem if it occurred on a weekend when limestone deliveries are suspended. One such failure occurred when the valve draining the V-500A silo became frozen in the closed position.

Operation and Maintenance History

The limestone silo valve had operated for 4,032 hours without failure.

Analysis of Cause of Failure

The valve workings became worn away from the friction generated by the constant flow of abrasive limestone through the valve.

Action Taken to Overcome the Problem

The valve was rebuilt and returned to service.

- **Process Air**

Identification of Failed Component: NV-305A Process Air Switching Valve

The process air system consists of compressors and feed valve which provide the absorber with the air required to ensure the oxidation of SO_2 at or above the 90% level specified in the contract. A failure in this system critically inhibits the plant's ability to process stack gas.

A typical failure to the system occurred when a process air switching valve housing cracked. The resulting leak forced the removal of one of the air rotary spargers from service.

Operation and Maintenance History

The switching valve had operated for 18,024 hours without failure.

Analysis of Cause of Failure

It was determined that moisture in the process air system had collected in the valve and corroded the housing.

Action Taken to Overcome the Problem

The valve was replaced and the affected air rotary sparger returned to service.

- **ARS/FAS**

Identification of Failed Component:

The air rotary spargers are unique devices which combine agitation with oxidation air distribution to the absorber. The failure of an air rotary sparger not only seriously reduces the distribution of oxidation air but also inhibits the agitation of slurry on the oxidation side of the absorber. A major failure occurred when the BARCO joint of the

A-120A air rotary sparger began squeaking loudly indicating impending failure of the joint. The BARCO joint is located on top of each air rotary sparger outside of the absorber tank and controls rotation of the agitator shaft as well as air distribution through the shaft.

Operation and Maintenance History

The air rotary sparger had operated for 12,192 hours without failure.

Analysis of Cause of Failure

Upon inspection of the BARCO joint it was discovered that the joint did not fit properly in its housing. Consequently, air leaked from the joint and the shaft moved within the joint. This movement caused the joint to wear prematurely.

Action Taken to Overcome the Problem

The BARCO joint was redesigned for a better fit around the agitator shaft and a new joint installed.

Remarks/Recommendations/Additional Information

Existing BARCO joints on other air rotary spargers were machined to the new design.

- **Expansion Joints**

Identification of Failed Component: EXP-109 Expansion Joint

Leaks in the expansion joints are not directly detrimental to the desulfurization process, yet they directly affect any surrounding equipment. Leaks in expansion joints allow unprocessed gas to escape into the atmosphere which defeats the goal of the facility to improve the environment. Condensation inside the expansion joints may also escape through these leaks and fall on the roadways, vehicles, or equipment below the joints. The corrosive nature of such condensate has a detrimental long-term effect on anything it contacts as evidenced by yellowed pipes and pitted roadways.

Operation and Maintenance History

The expansion joint had operated for 8,136 hours without failure.

Analysis of Cause of Failure

Condensation inside the ductwork combined with the untreated process gas to form weak sulfuric acid. Over time, this acid collected in the expansion joints and slowly corroded the joint's surface. Eventually a leak formed in the joint allowing both gas and condensate to escape.

Action Taken to Overcome the Problem

The expansion joint was replaced and gutters installed below the expansion joints to protect surrounding equipment in the event of another leak.

Remarks/Recommendations/Additional Information

Insulating jackets installed around the expansion joints are currently being tested. In theory, the insulation will keep cooler surrounding air from lowering the temperature of the process gas locally in the area of the expansion joints. Higher temperatures in the expansion joints will prevent condensation and the formation of sulfuric acid.

- **Recirculation Pumps**

Identification of Failed Component: P-120L Recirculation Pump

Failure of a single recirculation pump is usually not a problem because typically only five of the twelve pumps are in operation. During times of high load, however, recirculation pump failure could cause the facility to fall below the 90% removal level guaranteed by contract.

Operation and Maintenance History

The recirculation pump had operated for 7,896 hours without failure.

Analysis of Cause of Failure

Over time, the abrasive nature of the slurry had eroded the protective rubber lining of the reducing spool piece. Once the slurry was through the hard rubber lining, the vulnerable metal quickly wore away forming a pinhole leak which forced the pump to be shut down.

Action Taken to Overcome the Problem

The reducing spool piece was replaced and surrounding rubber lined pipe inspected for rubber damage to prevent further damage.

- **Absorber**

Identification of Failed Component: 72" Header Pipe

The integrity of the 72" header pipe is critical to plant operation. All of the recirculation pumps feed to the top of the absorber through one main pipe. Failure of this pipe would cause an immediate shutdown of the facility until the pipe could be replaced.

Operation and Maintenance History

The 72" header pipe had operated for 11,664 hours without failure.

Analysis of Cause of Failure

The 72" header suffered from the same weakness as all of the facility's rubber lined pipes. Once the protective rubber lining was removed, the metal of the pipe quickly succumbed to the abrasive nature of the slurry.

Action Taken to Overcome the Problem

The damaged section of pipe was removed, surrounding pipe inspected for possible rubber damage, and a new 72" header installed.

- **Mist Eliminator**

Identification of Failed Component: NV-159O Mist Eliminator Valve

The mist eliminator is a general term used to refer to a system of valves, nozzles, and shutters designed to remove particulate matter from the gas stream before it exits to the environment through the stack. This prevents the stack and surroundings from becoming coated with a layer of dust from fallout from the stack plume. Particulate removal is also stipulated in the operating permits for the facility, and a mist eliminator failure is a serious concern. A series of redundant valves helps to ensure a complete failure is unlikely, but failures to individual components do occur.

Operation and Maintenance History

The mist eliminator valve had operated for 22,824 hours without failure.

Analysis of Cause of Failure

The internal workings of the NV-159O mist eliminator valve became corroded and the valve actuator became frozen. The valve became locked in the open position and was removed from service.

Action Taken to Overcome the Problem

The valve actuator was replaced and returned to service.

- **ABS Bleed Pumps**

Identification of Failed Component: P-125A Absorber Bleed Pump

Only one of the two available bleed pumps is required to draw off slurry from the absorber. Should both pumps become unavailable, however, the facility could be operated for up to five hours before the density and slurry level inside the absorber became too high, depending on the load conditions.

A typical failure occurred when a pinhole leak developed in the pump housing near the impeller.

Operation and Maintenance History

The absorber bleed pump had operated for 7,248 hours without failure.

Analysis of Cause of Failure

It was determined that a piece of the impeller became fatigued and cracked off, damaging the protective rubber lining. The lining wore away leaving bare metal which was easily eroded by slurry.

Action Taken to Overcome the Problem

The rubber damage to the pump casing was repaired and the impeller replaced.

- **Centrifuge Feed System**

Identification of Failed Component: P-370A Centrifuge Feed Pump

While only one of the two available centrifuge feed pumps is necessary to provide slurry to the centrifuge feed loop, the loss of both pumps would constitute a serious failure. The facility could operate for up to three days without either centrifuge feed pump before the absorber hold tank became full under normal operating conditions. A typical failure occurred when the pump casing developed a leak.

Operation and Maintenance History

The centrifuge feed pump had operated for 12,144 hours without failure.

Analysis of Cause of Failure

Upon disassembling the pump it was determined that the protective lining had been damaged and the exposed metal eroded by the slurry.

Action Taken to Overcome the Problem

The pump's shaft and throat bushing were replaced, the lining damage repaired, and the pump returned to service.

- **Centrifuges**

Identification of Failed Component: Centrifuge Spokes

The nine centrifuges are critical to the operation of the facility. Typically four to six centrifuges are in use drying the product gypsum down to approximately 7% moisture by weight. Achieving a moisture level this low is critical to the wallboard company that eventually utilizes the gypsum.

Because of the abrasive nature of the gypsum slurry, the internal components of the centrifuges must be coated with rubber to protect the vulnerable metal from erosion. The common condition of rubber damage requires the removal of a centrifuge from service until rubber repair can be effected.

Operation and Maintenance History

The centrifuge had operated for 5,616 hours without failure.

Analysis of Cause of Failure

The flow of slurry over the spokes wore away their protective rubber coating.

Action Taken to Overcome the Problem

The rubber damage was patched using a rubber repair kit from the manufacturer.

Remarks/Recommendations/Additional Information

New rubber formulas and ceramic resins are being tested for better durability in the centrifuges.

- **Filtrate Sump**

Identification of Failed Component: P-320A Filtrate Sump Pump

Filtrate from the centrifuges drains into the filtrate sump. From the filtrate sump, slurry is pumped to the filtrate thickener tank for the further recovery of solids. A failure of the sump pump limits the removal of gypsum because the centrifuges cannot drain their filtrate. The P-320A pump was taken out of service when the upper shaft bearings wore out.

Operation and Maintenance History

The filtrate sump pump had operated for 3,072 hours without failure.

Analysis of Cause of Failure

It was determined that the high speeds of operation caused vibrations in the pump housing which caused the bearings to wear excessively and fail prematurely.

Action Taken to Overcome the Problem

The bearings were replaced and the pump returned to service.

Remarks/Recommendations/Additional Information

The filtrate sump pump bolts and operating speeds were modified to reduce vibrations and extend bearing life.

- **Overflow Tank**

Identification of Failed Component: V-330 Thickener Feed Pipe

Filtrate from centrifuges and recirculating slurry from the filtrate tank and the filtrate thickener sump are fed through the top of the filtrate thickener tank. The three pipes feed into a single pipe which carries the slurry near the bottom of the tank to allow the majority of solids to settle out. When a rubber connection near the top of the tank failed, slurry was released near the top of the tank. Solids were not given sufficient time to settle. This had the immediate effect of clouding the overflow tank and increasing the density of the tank's slurry. Had the situation been allowed to continue, the overflow tank would have filled with solids.

Operation and Maintenance History

The thickener feed pipe had operated for 24,024 hours without failure.

Analysis of Cause of Failure

The abrasive filtrate slurry had eroded the rubber connector used to join two portions of the fill pipe.

Action Taken to Overcome the Problem

The rubber connector was replaced with a thicker material to restore the flow of solids to the bottom of the thickener tank.

- **Conveyor**

Identification of Failed Component: C-312 Gypsum Conveyor Belt

The system of conveyor belts is responsible for the transportation of gypsum from each centrifuge to the gypsum storage building. The most serious failure to the system occurred when excessive wear to the edges of the belt caused the belts to track incorrectly on the rollers.

Operation and Maintenance History

The conveyor belt had operated for 7,176 hours without failure.

Analysis of Cause of Failure

The damage to the edges of the belts was caused by friction between the belt and the side curtain.

Action Taken to Overcome the Problem

The conveyor belt was replaced and the conveyor returned to service.

Remarks/Recommendations/Additional Information

The side curtains on all conveyors were changed to a softer rubber compound to ensure the contact of the belt and side curtain wears out the side curtain and not the belt in the future.

- **Cooling Water**

Identification of Failed Component: H-610B Cooling Water Discharge Valve

The cooling water system is responsible for keeping the various components of the plant operating within safe temperature ranges. A failure of this system would cause a shutdown of the facility to prevent damage to the components of other systems. One critical failure occurred when a cooling water discharge valve near the H-610B water cooler developed a leak.

Operation and Maintenance History

The cooling water valve had operated for 19,968 hours without failure.

Analysis of Cause of Failure

It was determined that sand in the cooling water system had collected in the valve. The action of the sand in the moving water had eroded the valve workings until a leak developed.

Action Taken to Overcome the Problem

The valve was replaced and the water cooler returned to service.

Remarks/Recommendations/Additional Information

The mesh size on the cooling water system filters was reduced to trap smaller particulate matter and prevent this problem from reoccurring.

- **Quench Pump**

Identification of Failed Component: P-600 Diesel Quench Pump

The quench pump is one of the most important pieces of protective equipment to the facility. In the event of a loss of recirculation in the absorber tower such as a leak in the distribution header, the quench pump must provide cooling water inside the tower. Failure of the quench pump would allow the hot process gas to severely damage the grid packing inside the tower.

In one instance the pump could not maintain a prime when a foot valve failed in the open position.

Operation and Maintenance History

The quench pump had operated for 19,128 hours without failure.

Analysis of Cause of Failure

The failure of the valve in the open position was determined to be caused by a bent valve actuator. Zebra mussels were found clogging the valve. The actuator was bent by the force of trying to close on the zebra mussels.

Action Taken to Overcome the Problem

Zebra mussels were cleaned from the valve and the actuator replaced.

Remarks/Recommendations/Additional Information

A hypochlorite dosing system has since been installed to combat the growth of zebra mussels throughout the facility.

- **Electrical**

Identification of Failed Component: Digital Output Control Card

The Bailey control system is the nerve center for the plant. Every automatic piece of equipment is controllable from one of the system's terminals. A failure of the Bailey system would be catastrophic. The entire plant would be running with only manual control to change the current settings. Localized failures to individual control components could also be serious depending on which pieces of equipment were affected. One such failure occurred when the digital output control

card for a recirculation pump discharge valve stopped responding to the system.

Operation and Maintenance History

The digital output control card had operated for 16,848 hours without failure.

Analysis of Cause of Failure

It was determined the card stopped responding due to a component failure on the control board.

Action Taken to Overcome the Problem

The faulty terminal board and output slave module were replaced and the pump returned to service.

4.6.3 Major Equipment Repair History

A record of major equipment repair is given in Appendix H.

5.0 TECHNICAL PERFORMANCE

5.1 Effects of Operating Variables and Results

The general concepts of SO_2 removal using a wet limestone system are well known. The rate of SO_2 absorption in a wet limestone system is determined from the following equation:

$$\log \frac{Y_{in}-Y^*}{Y_{out}-Y^*} - k_e L^a \bullet \frac{Z_{eff}}{G}$$ [1,2,3]

where:

Yin	is inlet SO_2 concentration (ppm)
Yout	is outlet SO_2 concentration (ppm)
Y*	is SO_2 equilibrium partial pressure in the absorber tower (ppm) and is a function of operating temperature, pH, and SO_3 in the absorber liquid
ke	is absorption coefficient and is a function of operating pH, gas velocity and inlet SO_2 concentration
Zeff	is effective absorbing height (m) and is a function of tower height, spray height, and packing height
L	is recirculation liquid volume ($m^3/m^2 \bullet H$)
G	is gas molar flow ($kgmol/m^3 \bullet H$)
a	is a constant

(1) Rochelle, G. T., "Chemistry of Limestone Scrubbing," Appendix A of "Limestone FGD Scrubbers: Users Handbook," EPA Contract No. 68-02-3173, April, 1981.

(2) Gage, C. L., "Limestone Dissolution in Modeling of Slurry Scrubbing for Flue Gas Desulfurization," Ph.D. Dissertation, December, 1989.

(3) Agarwal, R. S., and Rochelle, G. T., "Chemistry of Limestone Slurry Scrubbing," presented at the SO_2 Control Symposium Boston, Massachussetts, August, 1993.

The variables that affect SO_2 removal are: inlet SO_2 concentration (fuel sulfur content), stoichiometric ratio of calcium to sulfur (SR), absorption coefficient (absorber pH, gas velocity, sulfur content), the effective absorption height (cannot be varied due to constant absorber height and packing height), and L/G ratio. Of these, the process variables studied in the demonstration project where L/G, SR, and sulfur content of the coal burned. Also studied were process variables such as boiler load (absorber gas velocity). The results are given in Figures 5-1 through 5-23.

Note that 100 percent of absorber recirculation rate refers to 241,154 gpm (corresponding to L/G of 128 gal/1,000 acf at full boiler load).

5.1.1 Demonstration Test No. I (Coal Sulfur Content 2.25%)

The coal used for this demonstration test had a sulfur content of approximately 2.25% and heating value of 11,932 Btu/lb.

A total of 41 tests were conducted with this coal: 19 tests at full load (520 MWe), 14 tests at 67% load (345 MWe), and 8 tests at 33% load (175 MWe). Variables studied were the effect of liquid to gas ratio, calcium utilization, and by-product quality on system performance (e.g., SO_2 removal efficiency).

The results of Demonstration Test No. I are presented in Figures 5-1 through 5-5. For the detailed discussion, refer to DOE Test Report #4. By-product gypsum quality is presented in Figure 4-7.

FIGURE 5 - 1

SO2 REMOVAL PERFORMANCE AT BAILLY AFGD (100% BOILER LOAD)

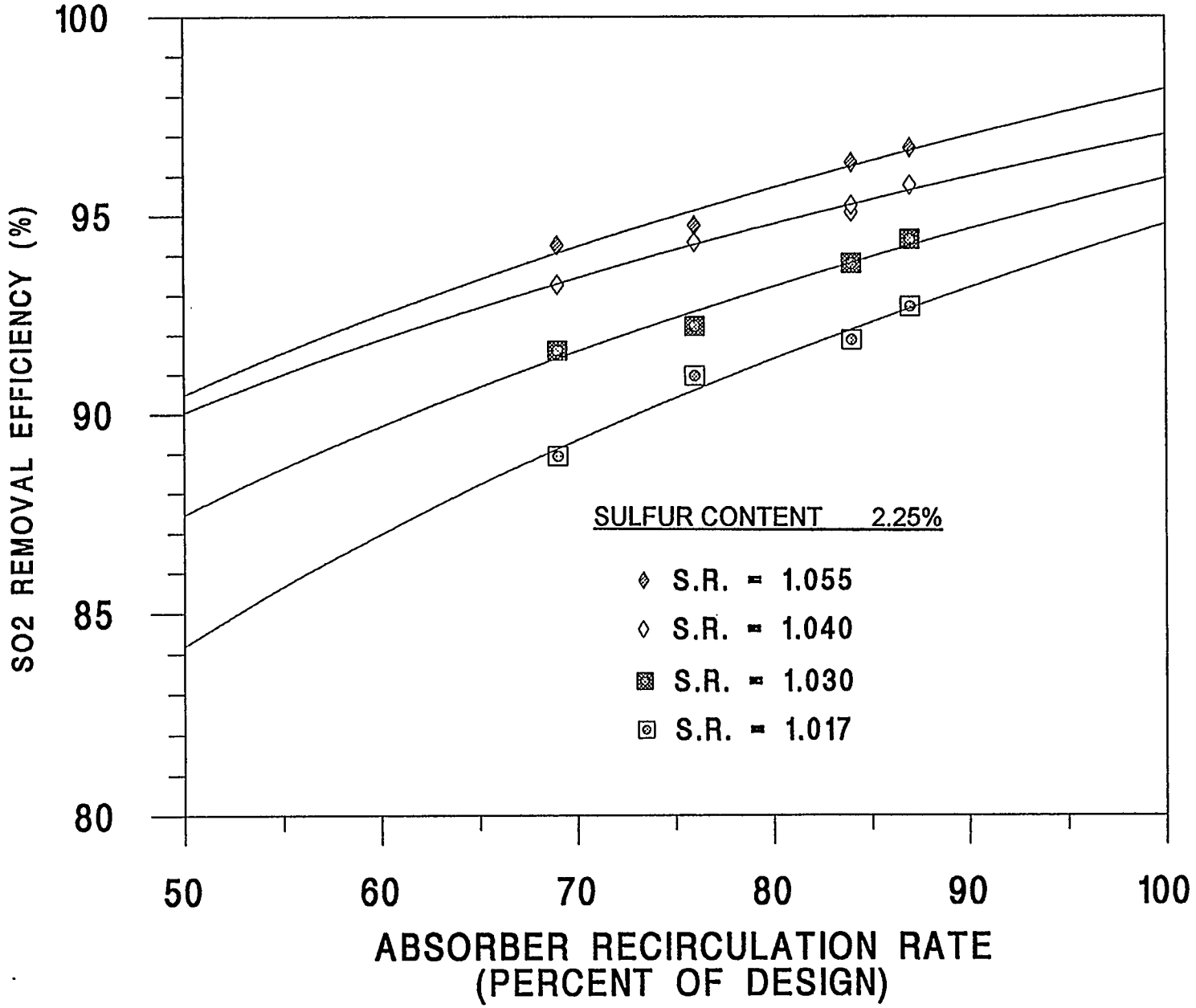

FIGURE 5-2

SO2 REMOVAL PERFORMANCE AT BAILLY AFGD (67% BOILER LOAD)

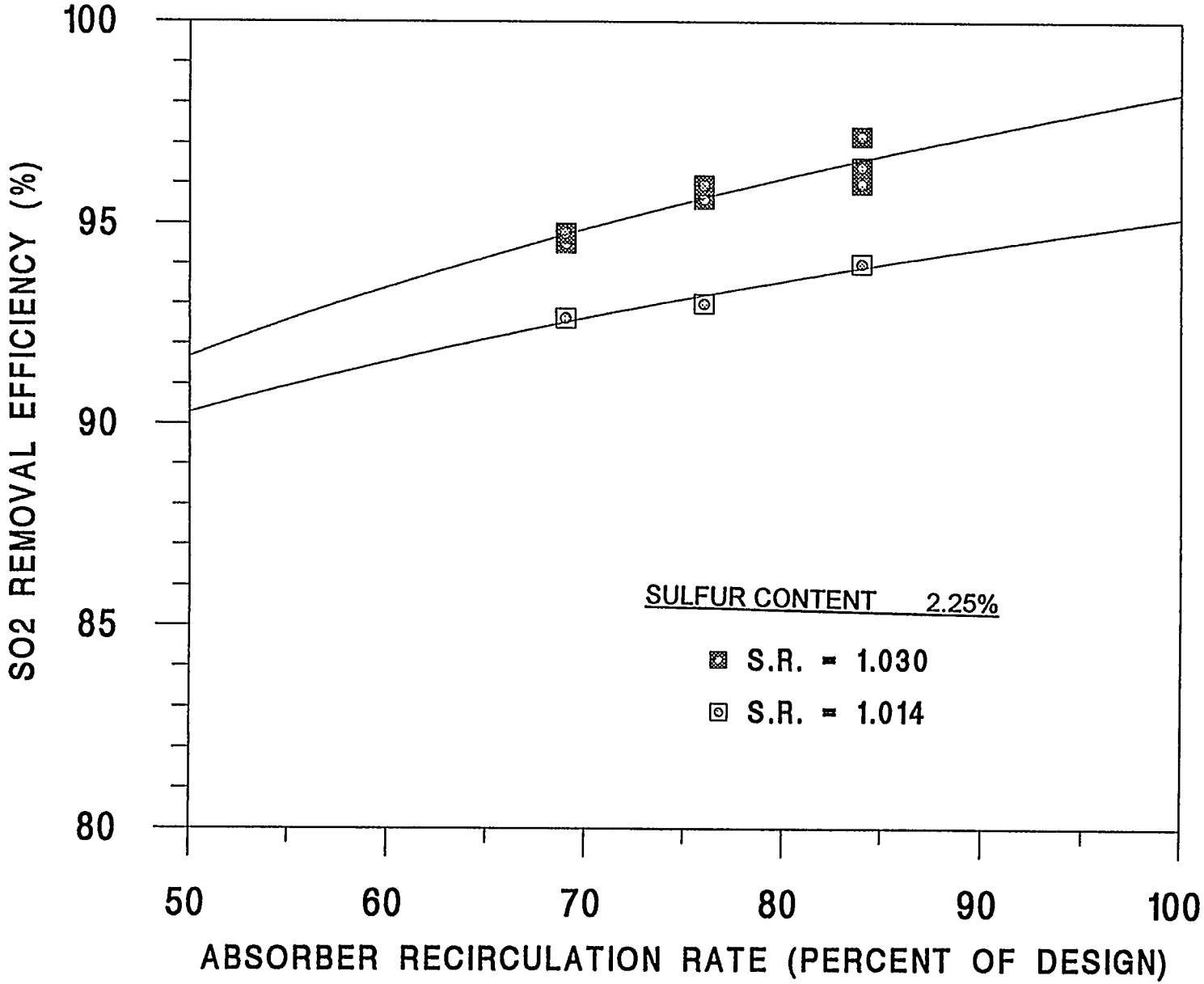

FIGURE 5 - 3

SO2 REMOVAL PERFORMANCE AT BAILLY AFGD (33% BOILER LOAD)

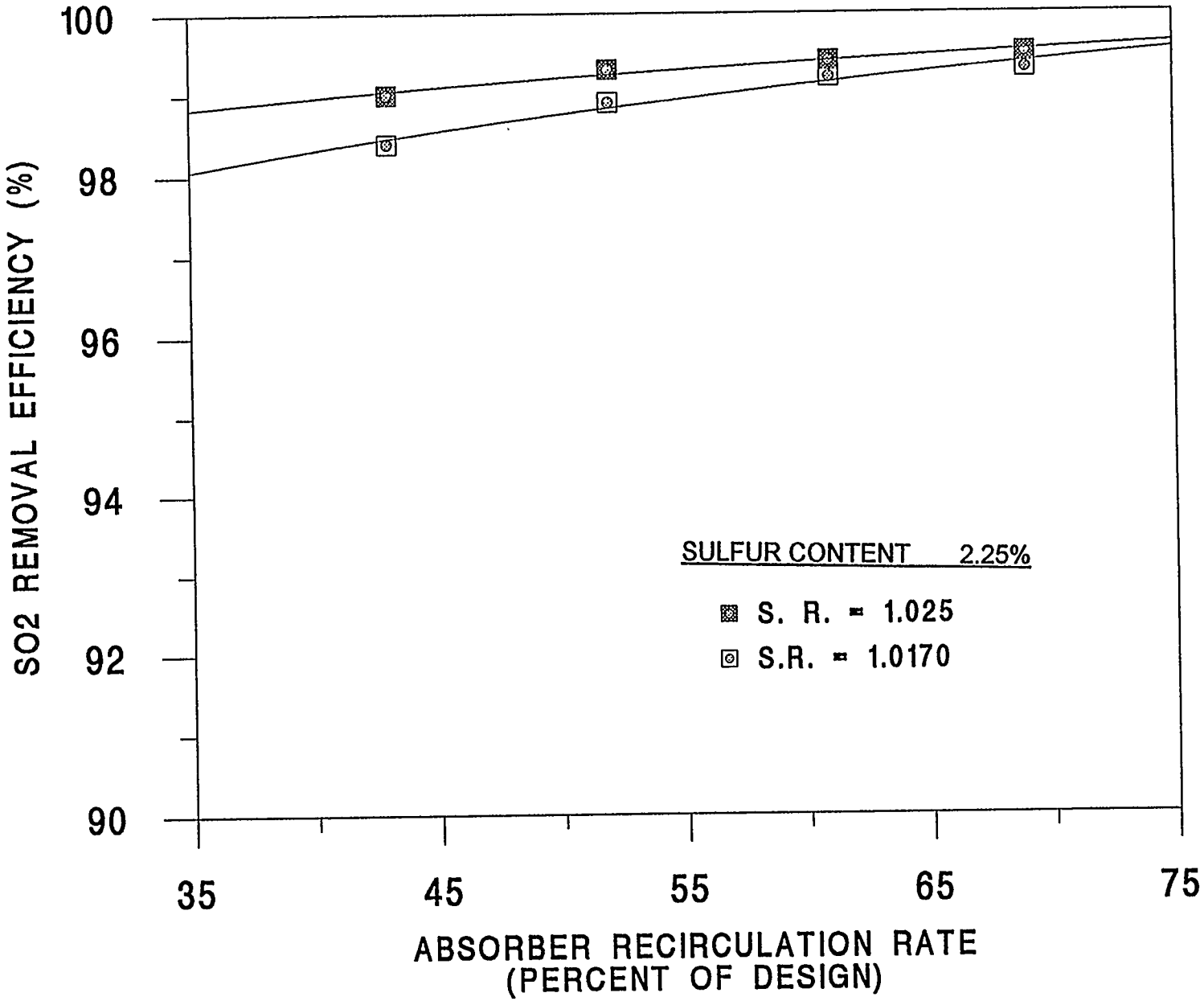

FIGURE 5 - 4

SO2 REMOVAL PERFORMANCE AT BAILLY AFGD (100% BOILER LOAD)

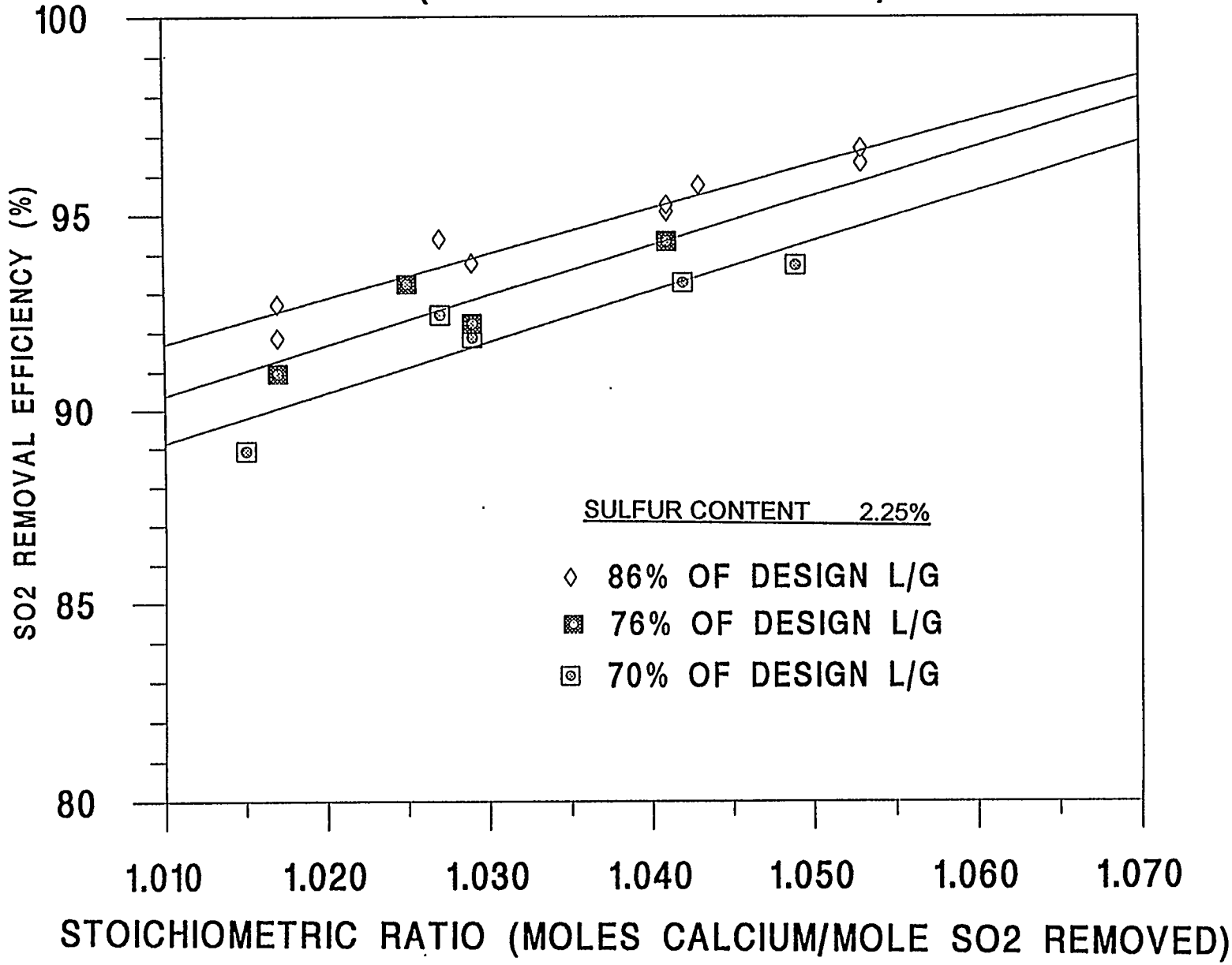

FIGURE 5 - 5

SO2 REMOVAL PERFORMANCE AT BAILLY AFGD (67% BOILER LOAD)

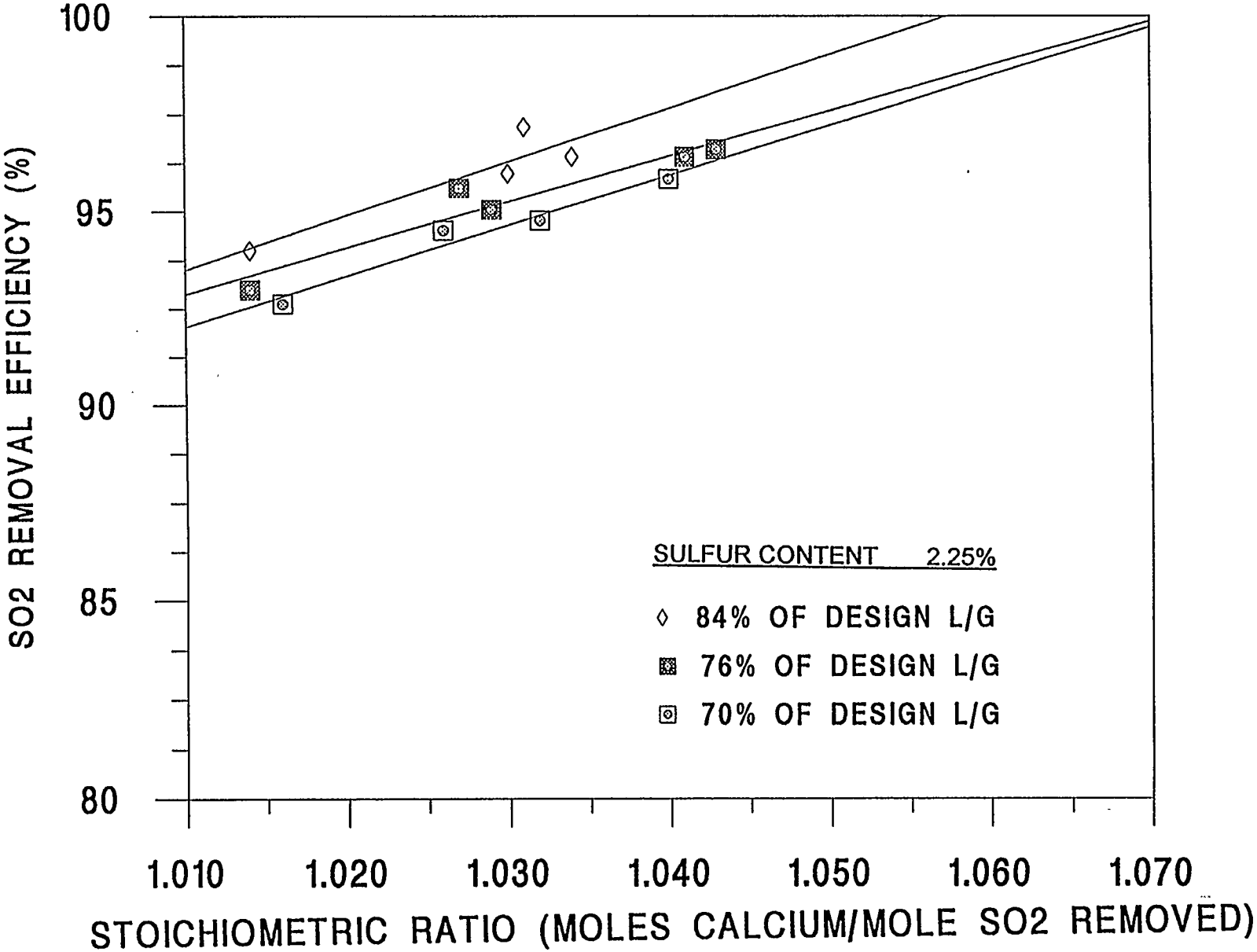

5.1.2 Demonstration Test No. II (Coal Sulfur Content 2.75%)

The coal used for this demonstration test contained approximately 2.75% sulfur and 11,022 Btu/lb of higher heating value.

A total of 32 tests were conducted during this demonstration test period, which consisted of 14 tests at full load, 11 tests at 67% load and 7 tests at 33% load. Variables evaluated during this testing were the effect of liquid to gas ratio, calcium utilization, oxidation, and by-product quality on system performance.

The results of Demonstration Test No. II are presented in Figures 5-6 through 5-11. For the detailed discussion, refer to DOE Test Report #5. By-product gypsum quality is presented in Figure 4-7.

FIGURE 5 - 6

SO2 REMOVAL PERFORMANCE AT BAILLY AFGD
(100% BOILER LOAD)

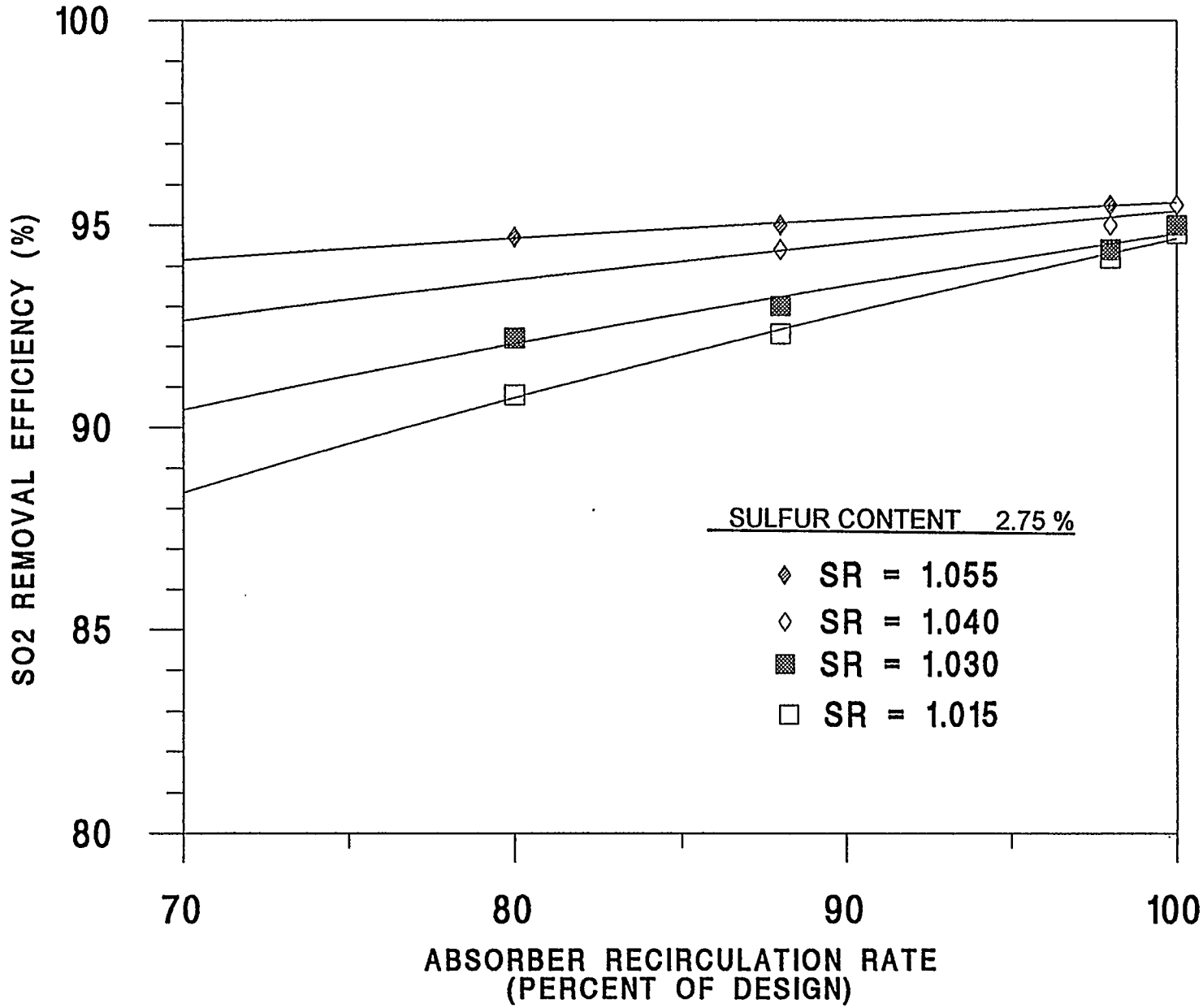

FIGURE 5 - 7

SO2 REMOVAL PERFORMANCE AT BAILLY AFGD
(67% BOILER LOAD)

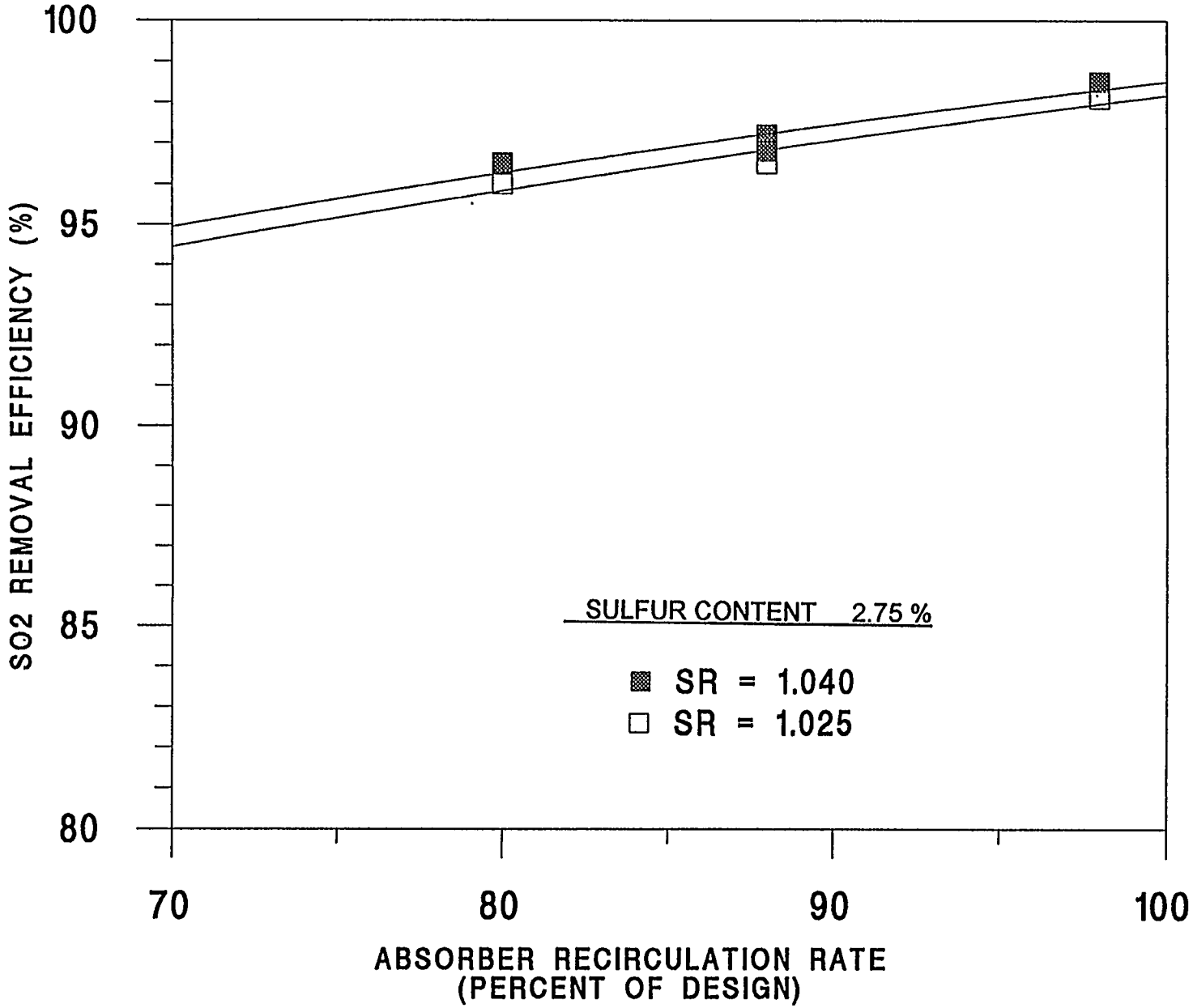

FIGURE 5 - 8

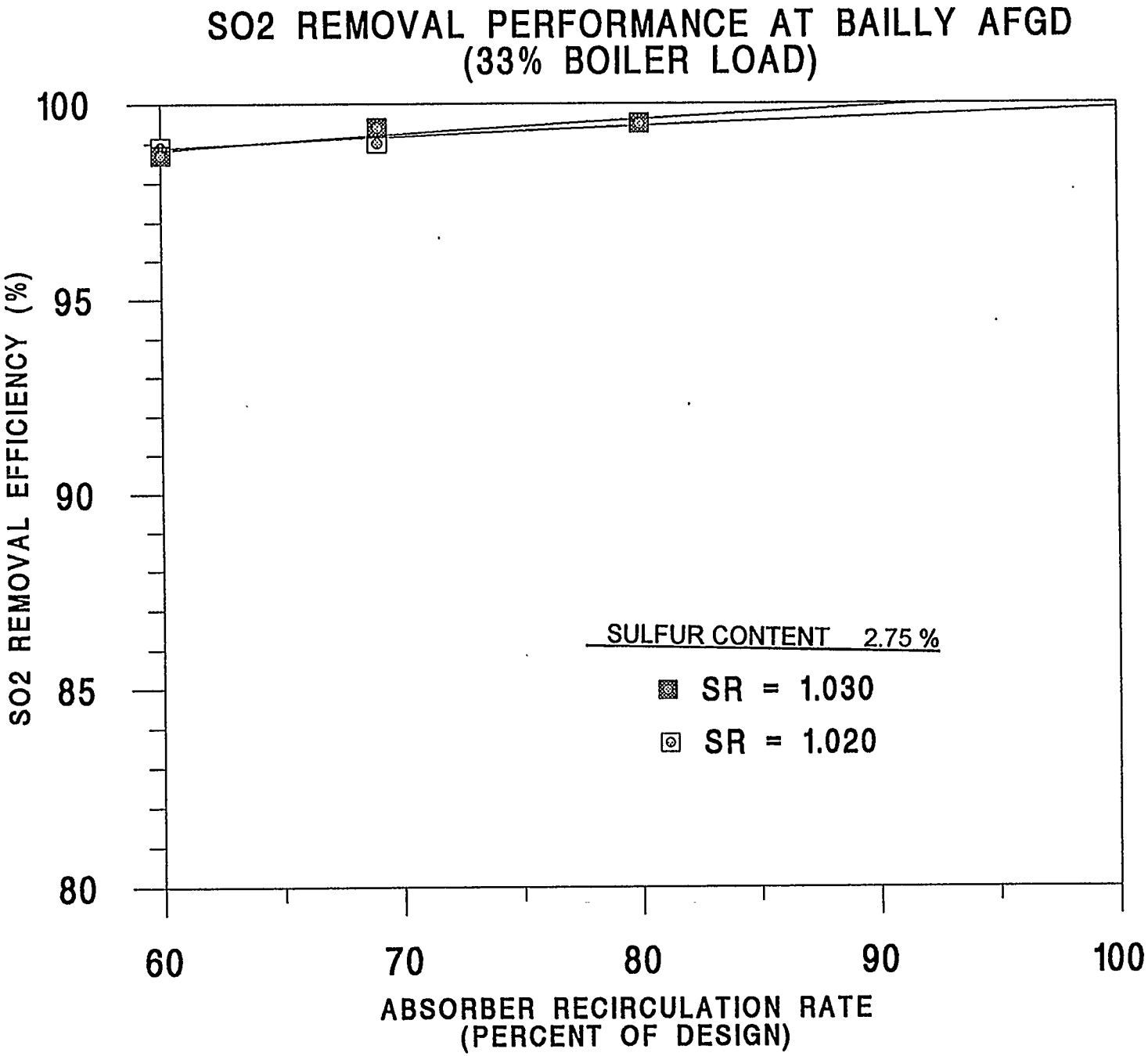
SO2 REMOVAL PERFORMANCE AT BAILLY AFGD
(33% BOILER LOAD)
100
95
90
85
80
SO2 REMOVAL EFFICIENCY (%)
SULFUR CONTENT 2.75 %
SR = 1.030
SR = 1.020
60
70
80
90
100
ABSORBER RECIRCULATION RATE
(PERCENT OF DESIGN)

FIGURE 5 - 9

SO2 REMOVAL PERFORMANCE AT BAILLY AFGD
(100% BOILER LOAD)

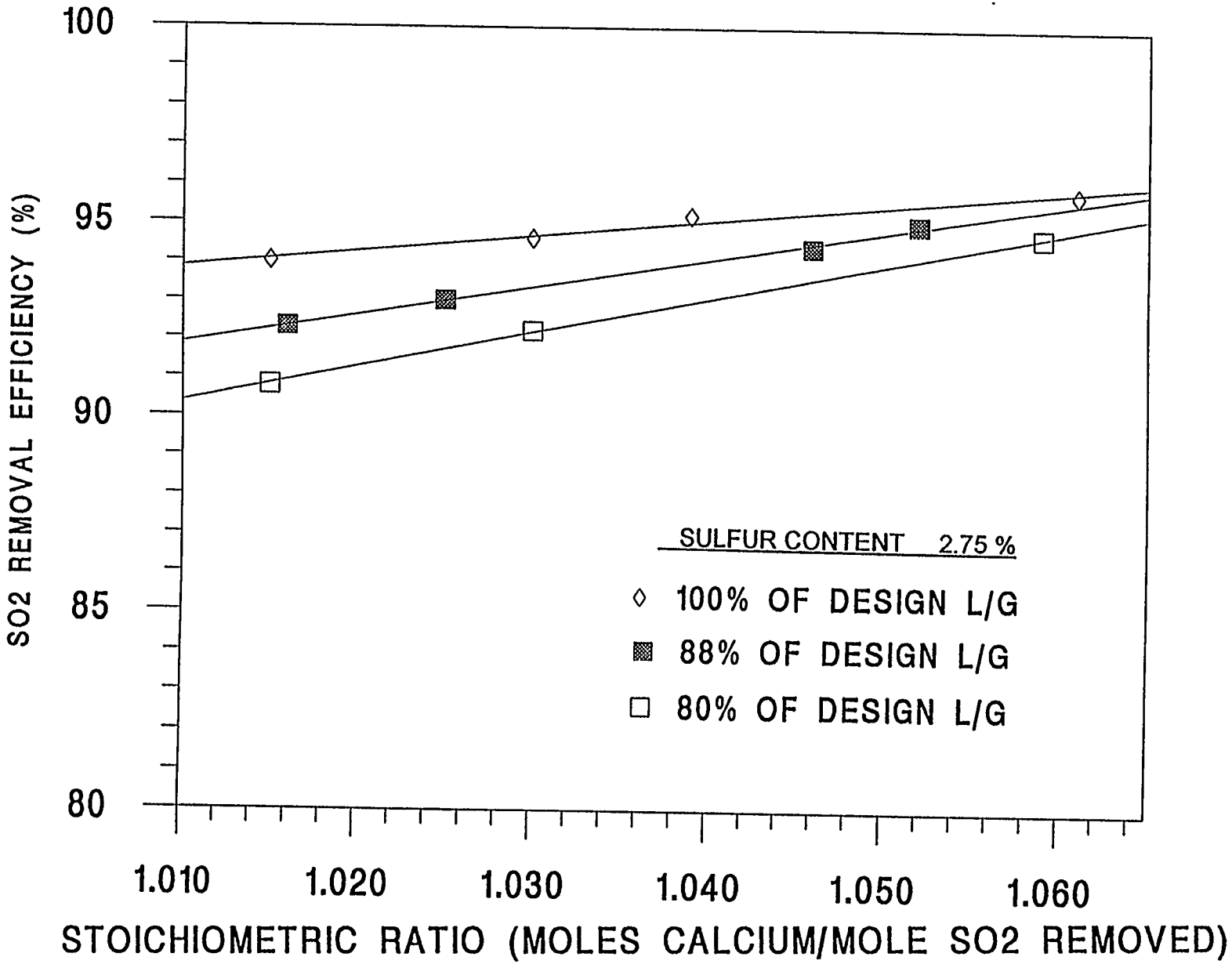

FIGURE 5 - 10

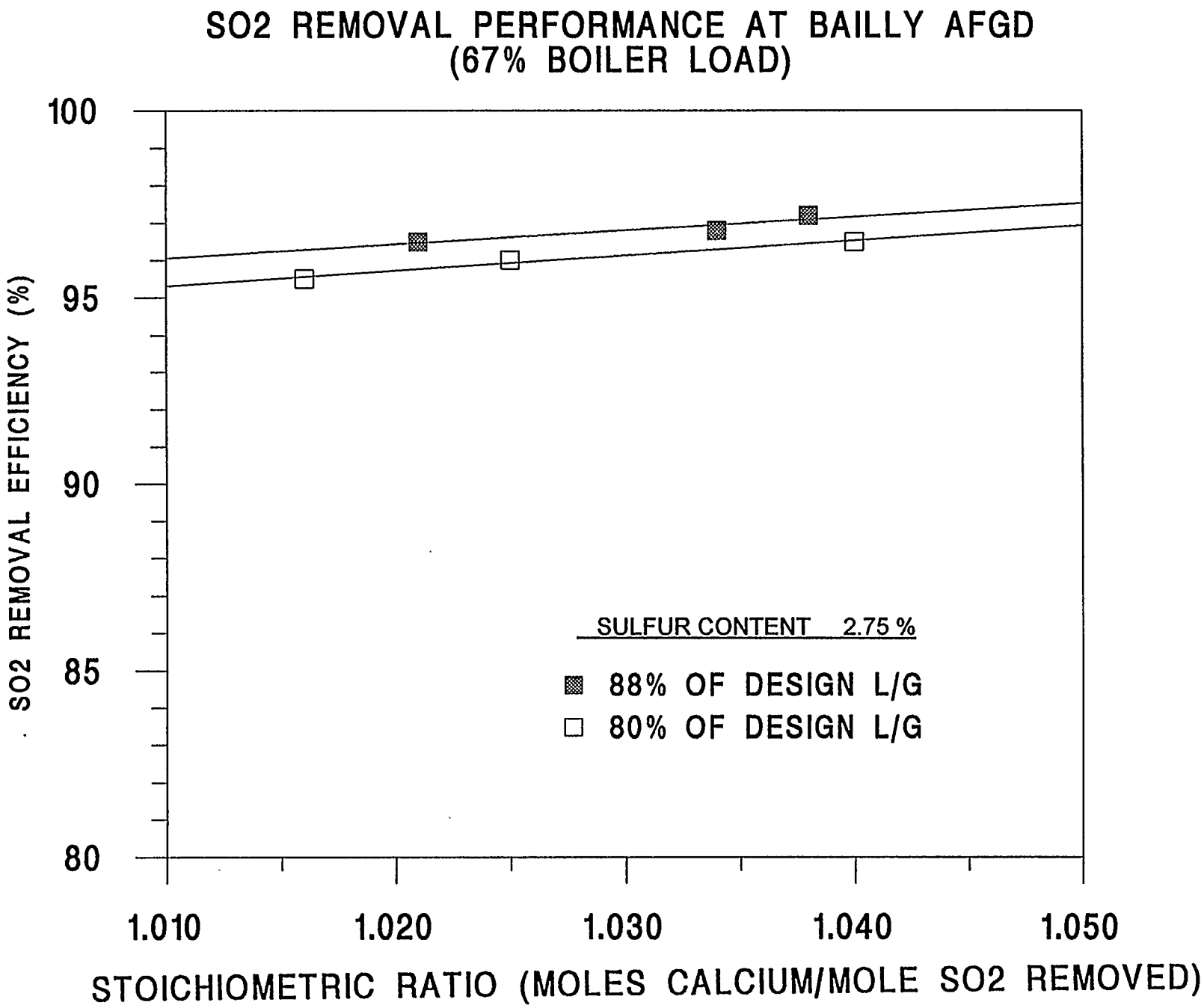
SO2 REMOVAL PERFORMANCE AT BAILLY AFGD
(67% BOILER LOAD)
100
95
90
85
80
SO2 REMOVAL EFFICIENCY (%)
SULFUR CONTENT 2.75 %
88% OF DESIGN L/G
80% OF DESIGN L/G
1.010
1.020
1.030
1.040
1.050
STOICHIOMETRIC RATIO (MOLES CALCIUM/MOLE SO2 REMOVED)

FIGURE 5 - 11

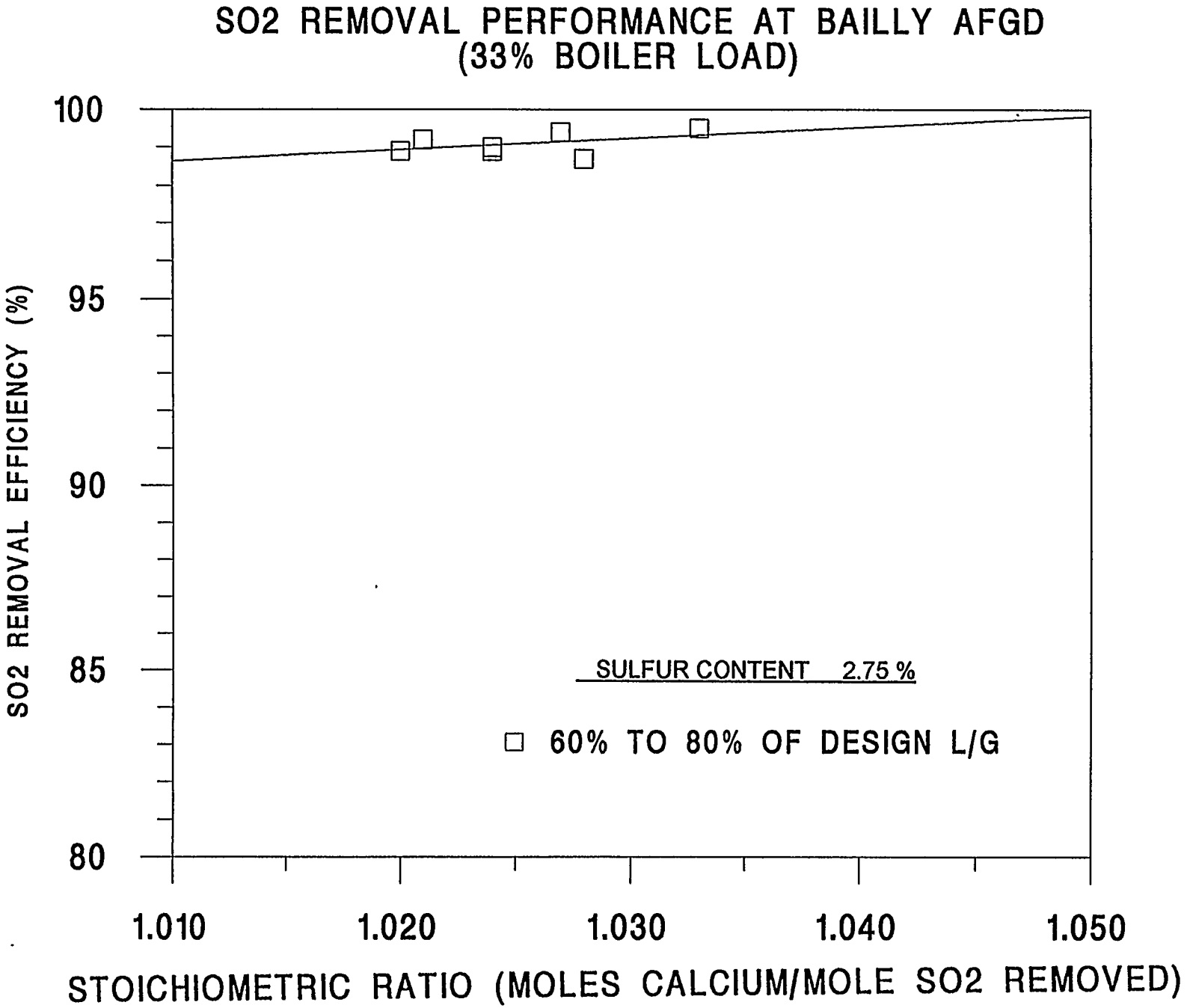
SO2 REMOVAL PERFORMANCE AT BAILLY AFGD
(33% BOILER LOAD)
100
95
90
85
80
SO2 REMOVAL EFFICIENCY (%)
SULFUR CONTENT 2.75 %
60% TO 80% OF DESIGN L/G
1.010
1.020
1.030
1.040
1.050
STOICHIOMETRIC RATIO (MOLES CALCIUM/MOLE SO2 REMOVED)

5.1.3 Demonstration Test No. III (Coal Sulfur Content 3.1%)

The coal used for Test No. III had a sulfur content of approximately 3.1% and higher heating value of 10,874 Btu/lb.

A total of 34 tests were conducted during this demonstration test period and they consisted of 18 tests at full boiler load, 11 tests at 67% boiler load and 5 tests at 33% boiler load. The overall objectives of the DOE Demonstration Test Plan No. III were to evaluate (1) the effect of L/G ratio, (2) the effect of calcium utilization, and (3) oxidation system performance, including SO_2 removal efficiency and by-product gypsum quality.

The results of Demonstration Test No. III are presented in Figures 5-12 through 5-15. For the detailed discussion, refer to DOE Test Report #1. By-product gypsum quality is presented in Figure 4-7.

FIGURE 5 - 12

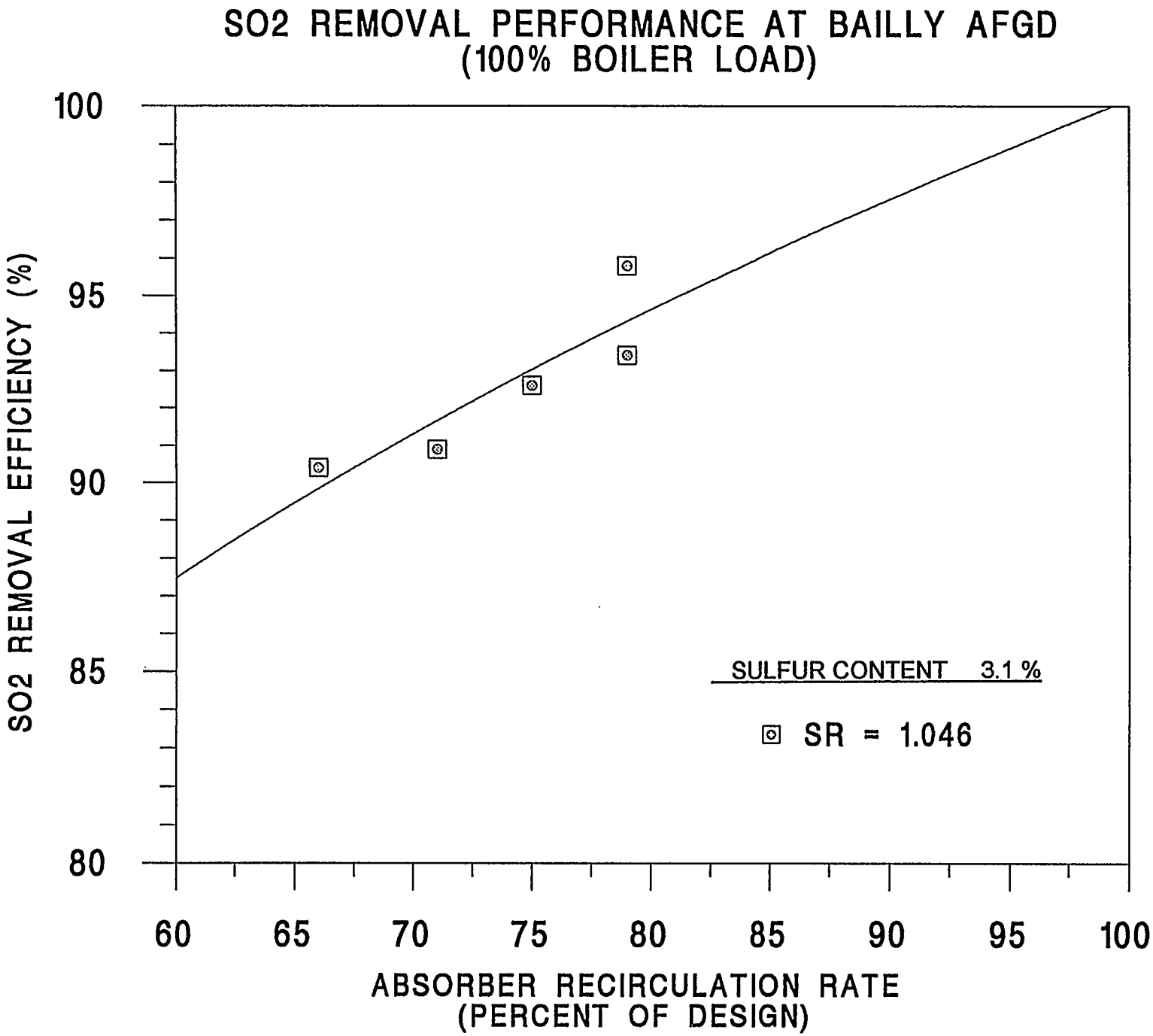
SO2 REMOVAL PERFORMANCE AT BAILLY AFGD
(100% BOILER LOAD)
SO2 REMOVAL EFFICIENCY (%)
100
95
90
85
80
60
65
70
75
80
85
90
95
100
ABSORBER RECIRCULATION RATE
(PERCENT OF DESIGN)
SULFUR CONTENT 3.1 %
SR = 1.046

FIGURE 5 - 13

SO2 REMOVAL PERFORMANCE AT BAILLY AFGD
(67% BOILER LOAD)

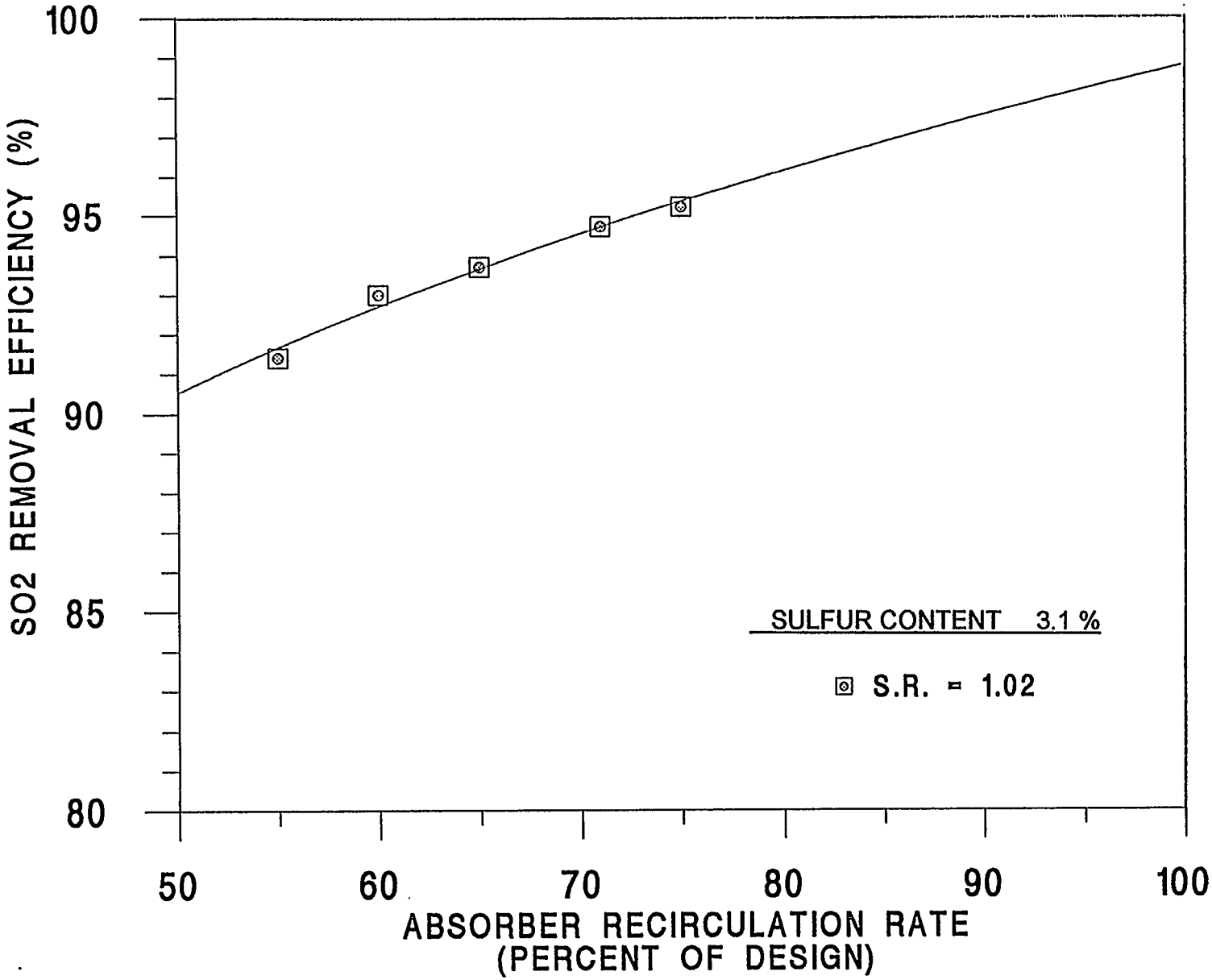

FIGURE 5 - 14

SO2 REMOVAL PERFORMANCE AT BAILLY AFGD
(100% BOILER LOAD)

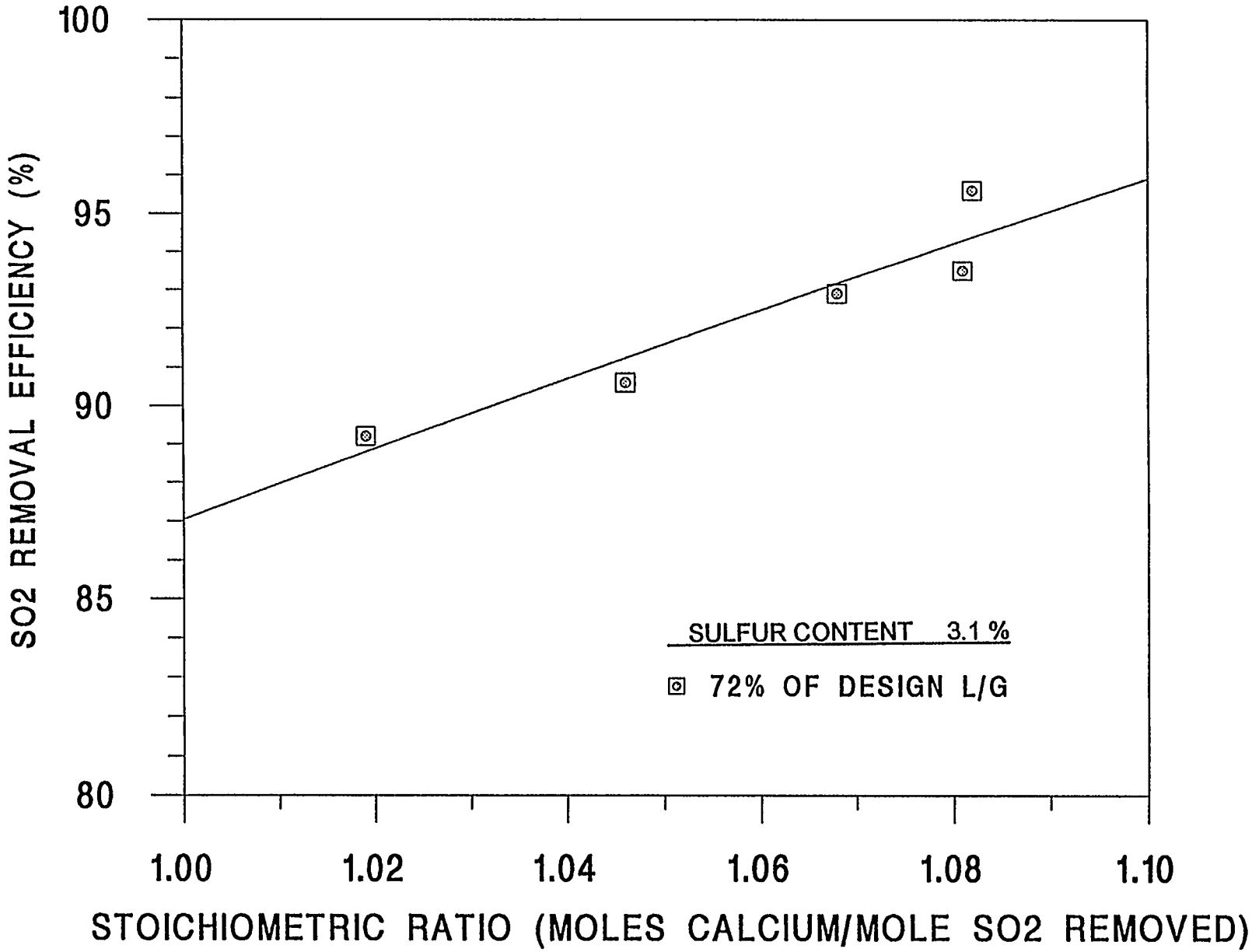

FIGURE 5 - 15

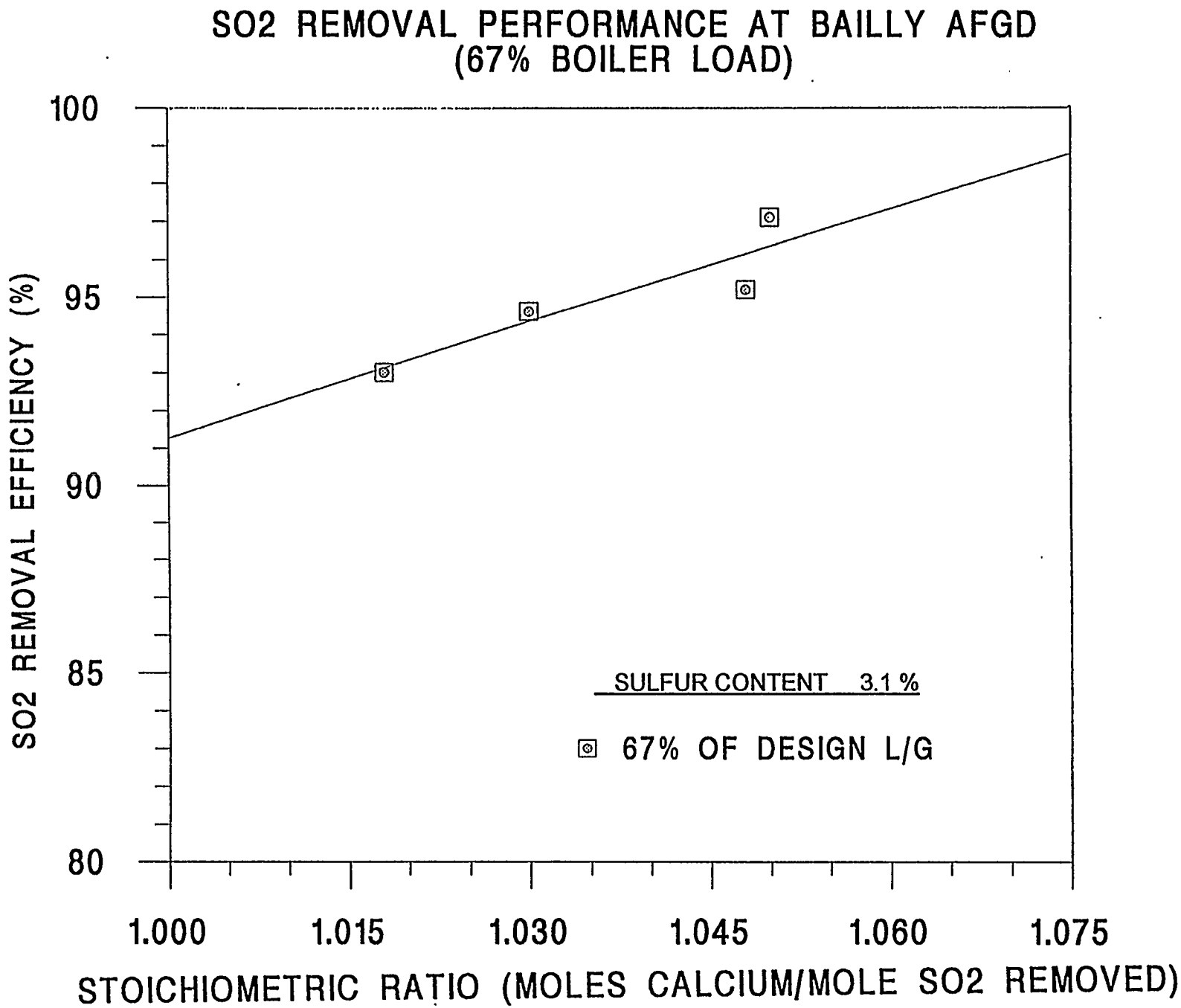
SO2 REMOVAL PERFORMANCE AT BAILLY AFGD
(67% BOILER LOAD)
100
95
90
85
80
SO2 REMOVAL EFFICIENCY (%)
SULFUR CONTENT 3.1 %
67% OF DESIGN L/G
1.000
1.015
1.030
1.045
1.060
1.075
STOICHIOMETRIC RATIO (MOLES CALCIUM/MOLE SO2 REMOVED)

5.1.4 Demonstration Test No. IV (Coal Sulfur Content 4.0%)

The coal used for Demonstration Test No. IV had a sulfur content of approximately 4.0% and higher heating value of 11,000 Btu/lb.

A total of 48 tests were conducted during this Demonstration Test No. IV. They consisted of 19 tests at full boiler load, 24 tests at 67% boiler load and 5 tests at 33% boiler load. The overall objectives of DOE Test No. IV were to evaluate (1) the effect of liquid to gas ratio, (2) the effect of calcium utilization, and (3) oxidation system performance, including SO_2 removal efficiency and by-product gypsum quality.

The results of Demonstration Test No. IV are presented in Figures 5-16 through 5-20. For the detailed discussion, refer to DOE Test Report #2. By-product gypsum quality is presented in Figure 4-7.

FIGURE 5 - 16

SO2 REMOVAL PERFORMANCE AT BAILLY AFGD
(100% BOILER LOAD)

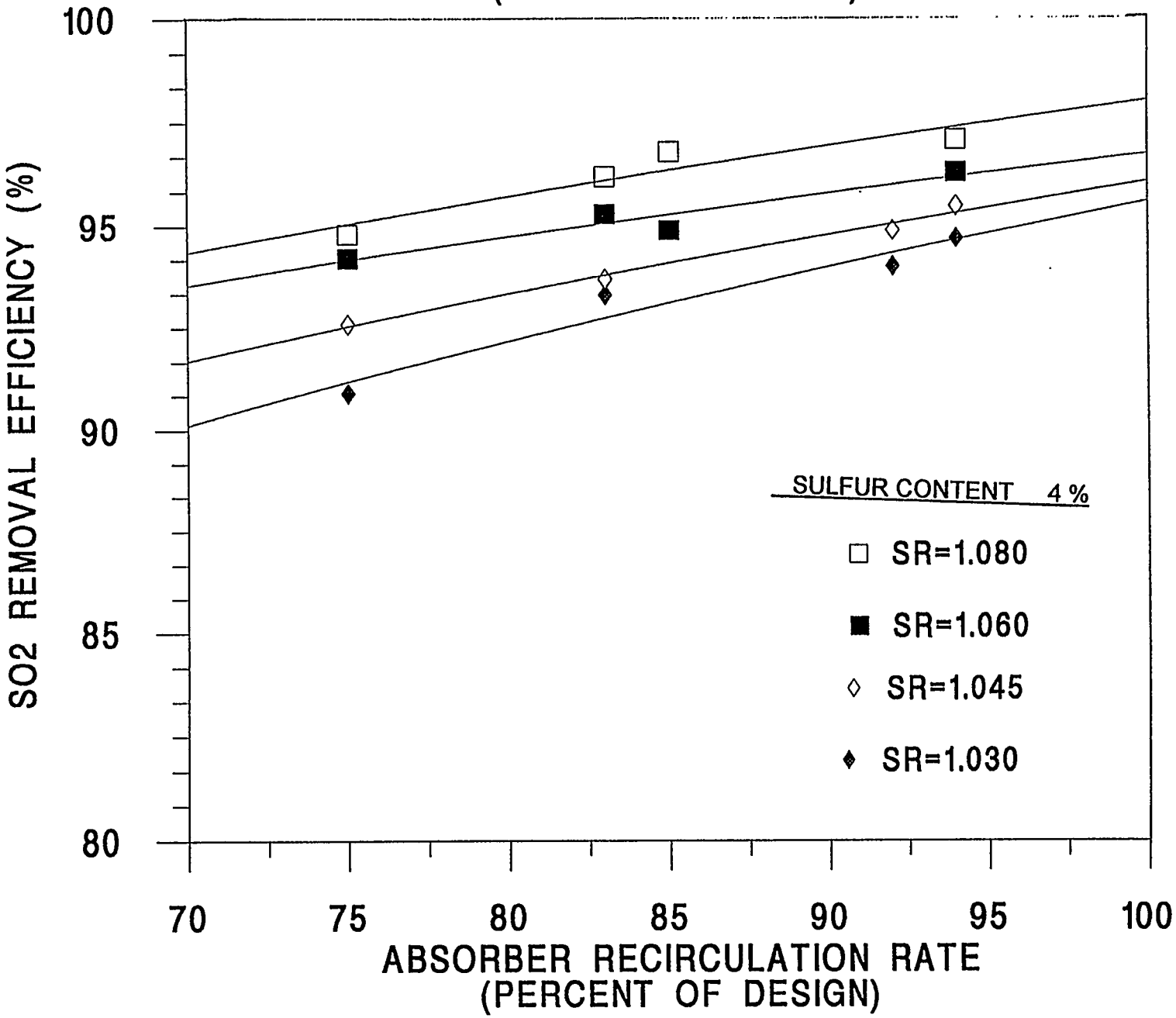

FIGURE 5 - 17

SO2 REMOVAL PERFORMANCE AT BAILLY AFGD
(67% BOILER LOAD)

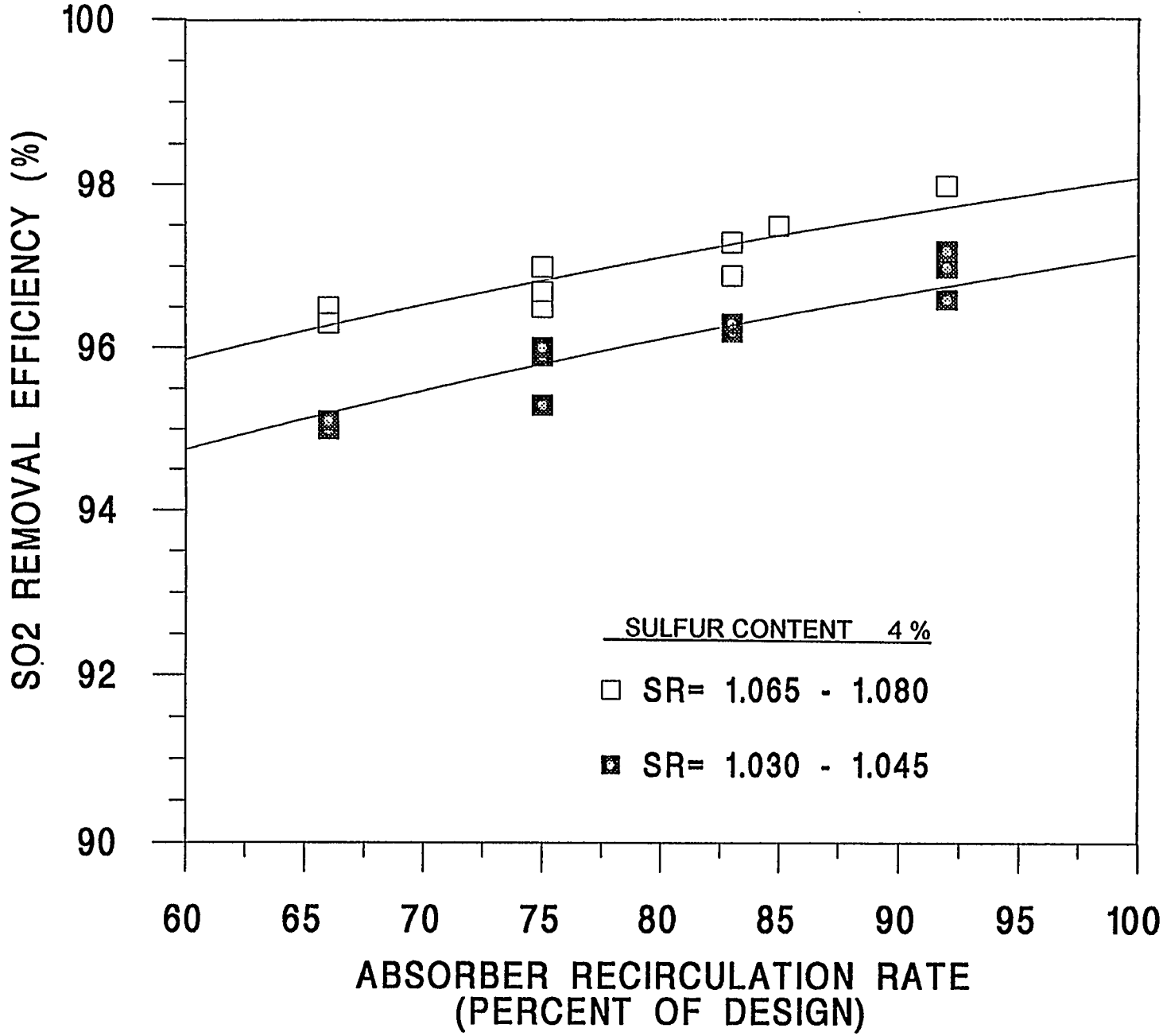

FIGURE 5 - 18

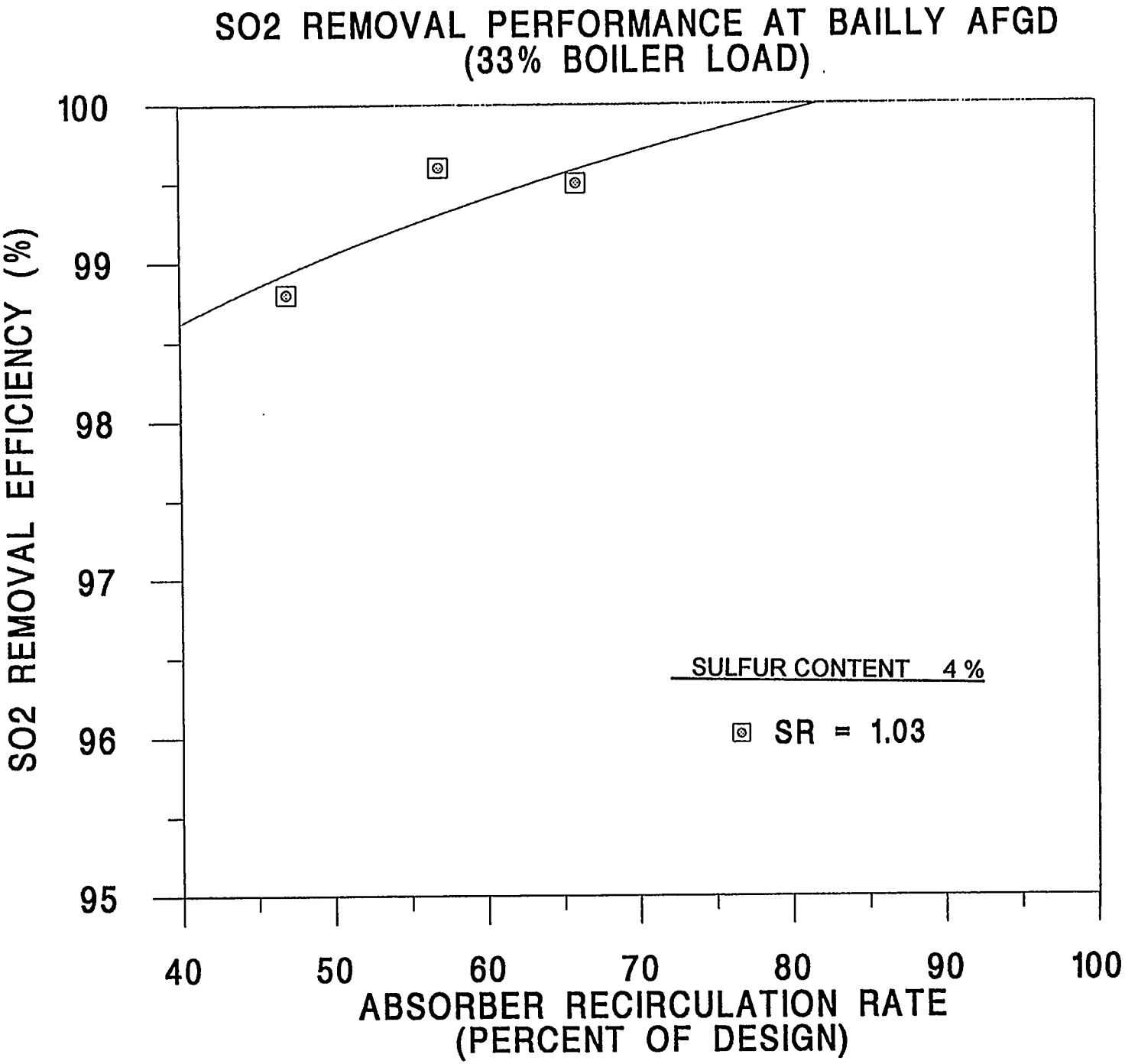
SO2 REMOVAL PERFORMANCE AT BAILLY AFGD
(33% BOILER LOAD)
SO2 REMOVAL EFFICIENCY (%)
100
99
98
97
96
95
40
50
60
70
80
90
100
ABSORBER RECIRCULATION RATE
(PERCENT OF DESIGN)
SULFUR CONTENT 4 %
SR = 1.03

FIGURE 5 - 19

SO2 REMOVAL PERFORMANCE AT BAILLY AFGD
(100 % BOILER LOAD)

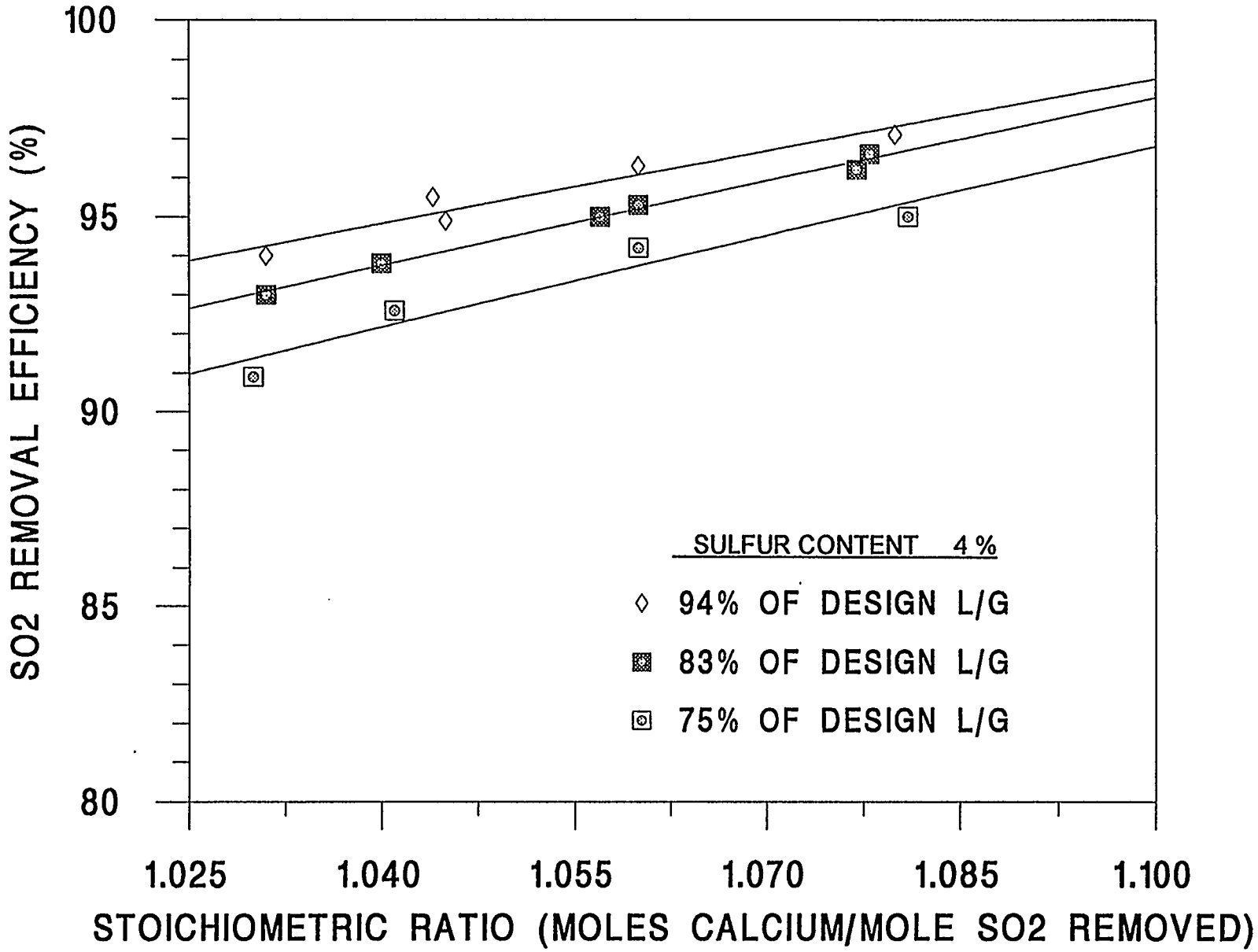

FIGURE 5 - 20

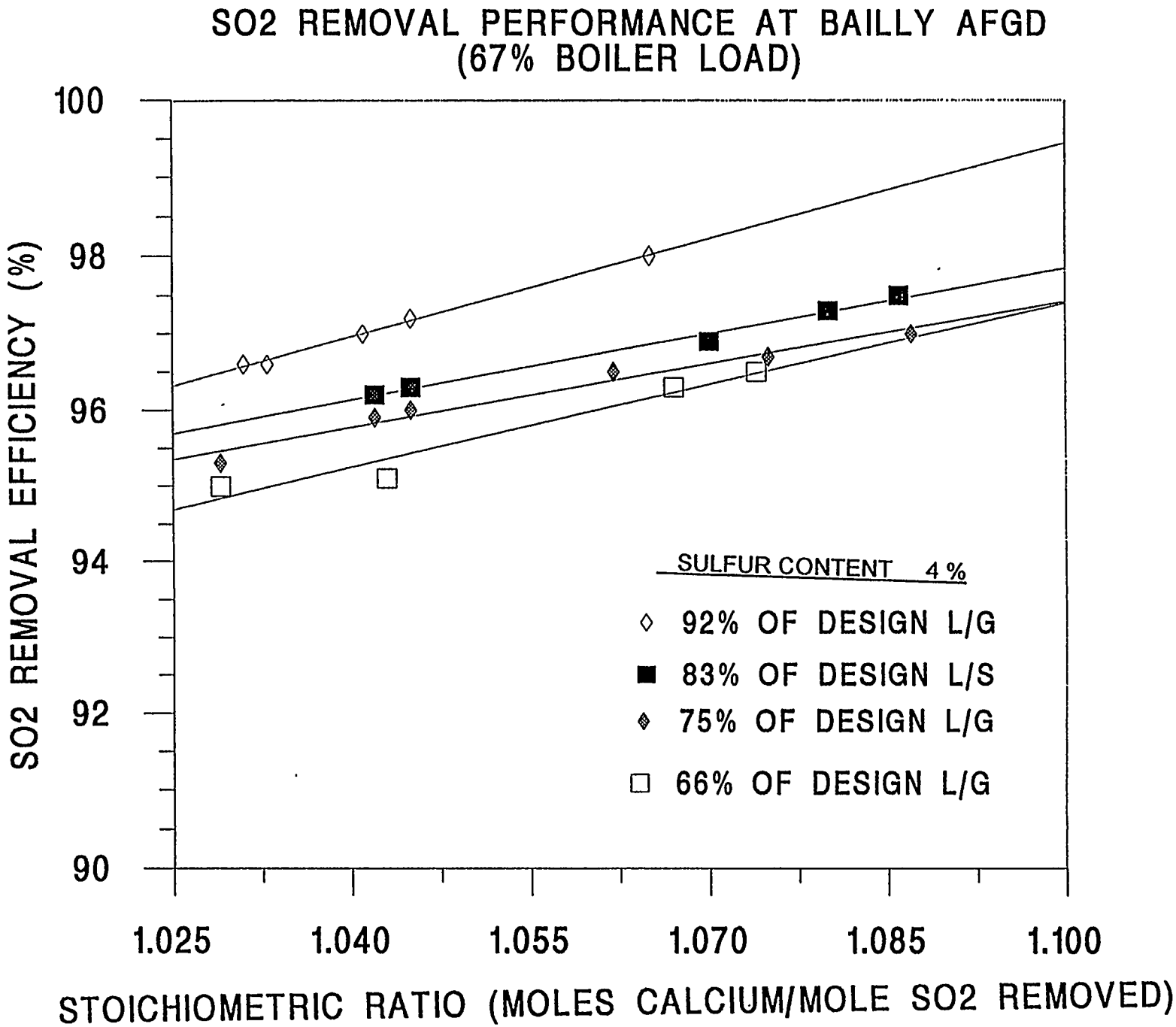
SO2 REMOVAL PERFORMANCE AT BAILLY AFGD
(67% BOILER LOAD)
SO2 REMOVAL EFFICIENCY (%)
100
98
96
94
92
90
1.025
1.040
1.055
1.070
1.085
1.100
STOICHIOMETRIC RATIO (MOLES CALCIUM/MOLE SO2 REMOVED)
SULFUR CONTENT 4 %
92% OF DESIGN L/G
83% OF DESIGN L/S
75% OF DESIGN L/G
66% OF DESIGN L/G

5.1.5 Demonstration Test No. V (Coal Sulfur Content 4.5%)

The coal used for Demonstration Test No. V had a sulfur content of approximately 4.5% and higher heating value of 12,700 Btu/lb.

A total of 20 tests were conducted during this test period which consisted of 15 tests at full boiler load and 5 tests at partial boiler load. The overall objectives of DOE Test V were to evaluate the ability of the AFGD system to remove and process high amounts of sulfur dioxide while maintaining at least 95% gypsum purity. The secondary objectives of this test were to evaluate (1) the effect of liquid to gas ratio, and (2) the effect of calcium utilization on system performance, including SO_2 removal efficiency and by-product gypsum quality.

The results of Demonstration Test No. V are presented in Figures 5-21 through 5-23. For the detailed discussion, refer to DOE Test Report #3. By-product gypsum quality is presented in Figure 4-7.

FIGURE 5 - 21

SO2 REMOVAL PERFORMANCE AT BAILLY AFGD
(100% BOILER LOAD)

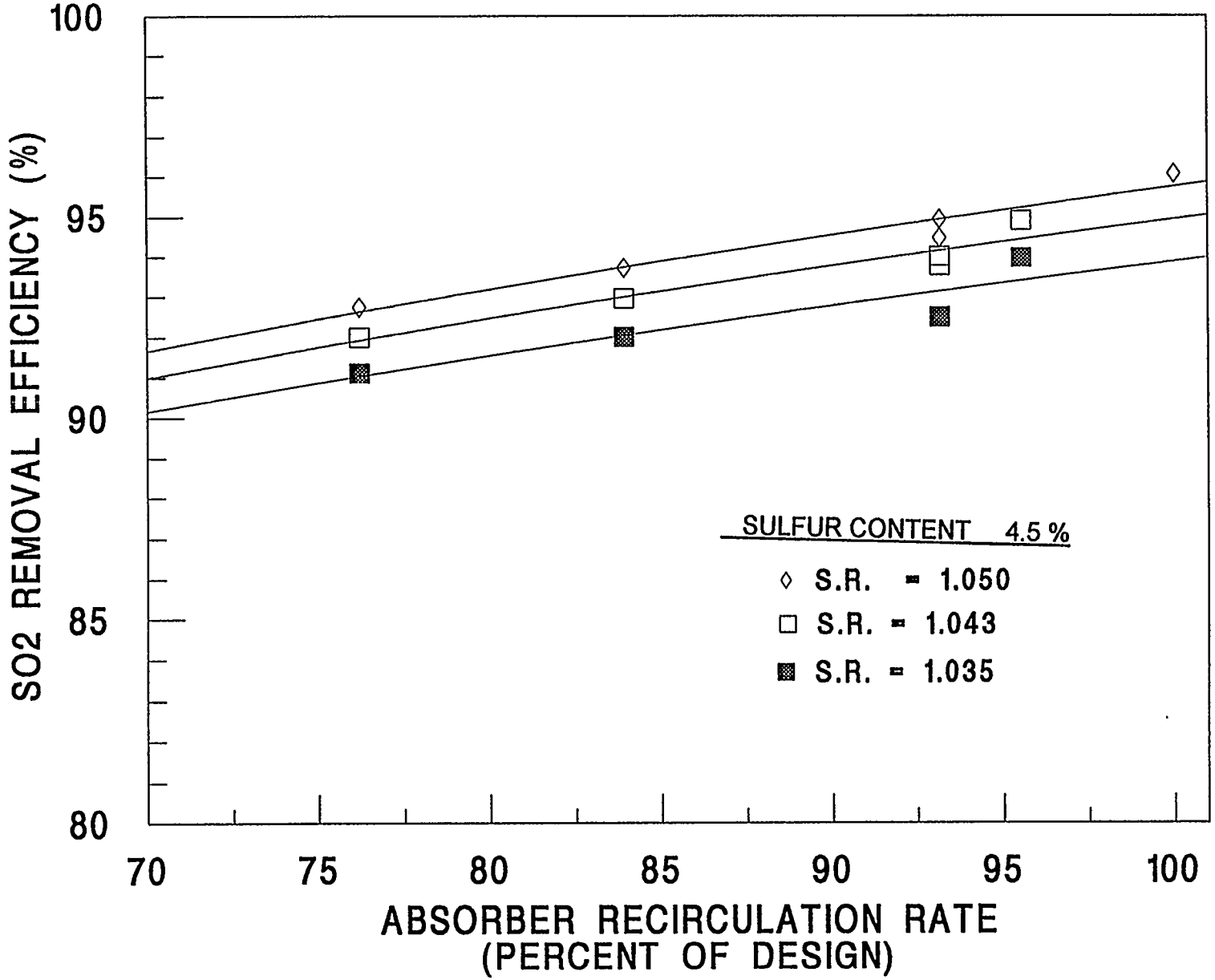

FIGURE 5 - 22

SO2 REMOVAL PERFORMANCE AT BAILLY AFGD
(67% BOILER LOAD)

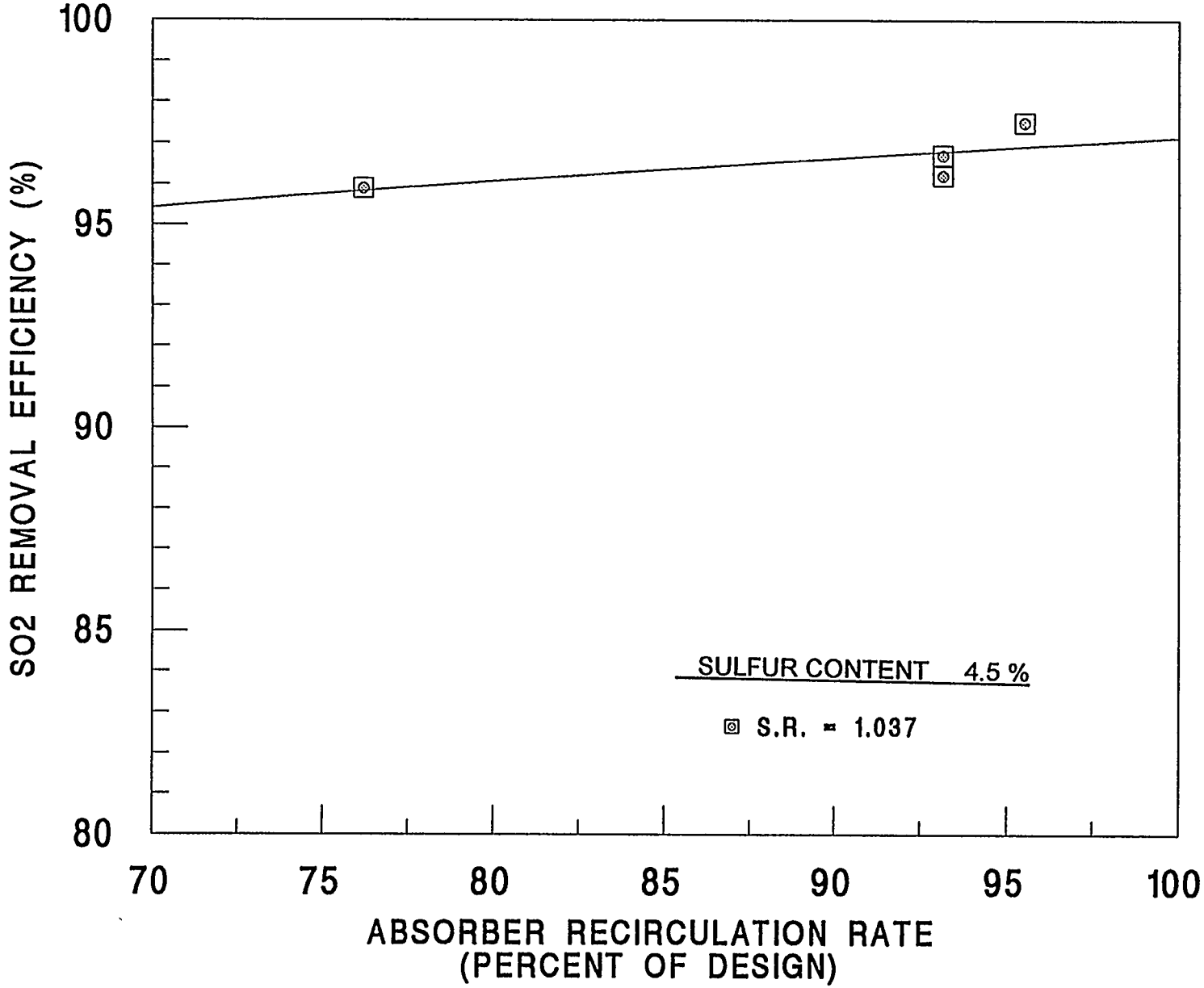

FIGURE 5 - 23

SO2 REMOVAL PERFORMANCE AT BAILLY AFGD
(100% BOILER LOAD)

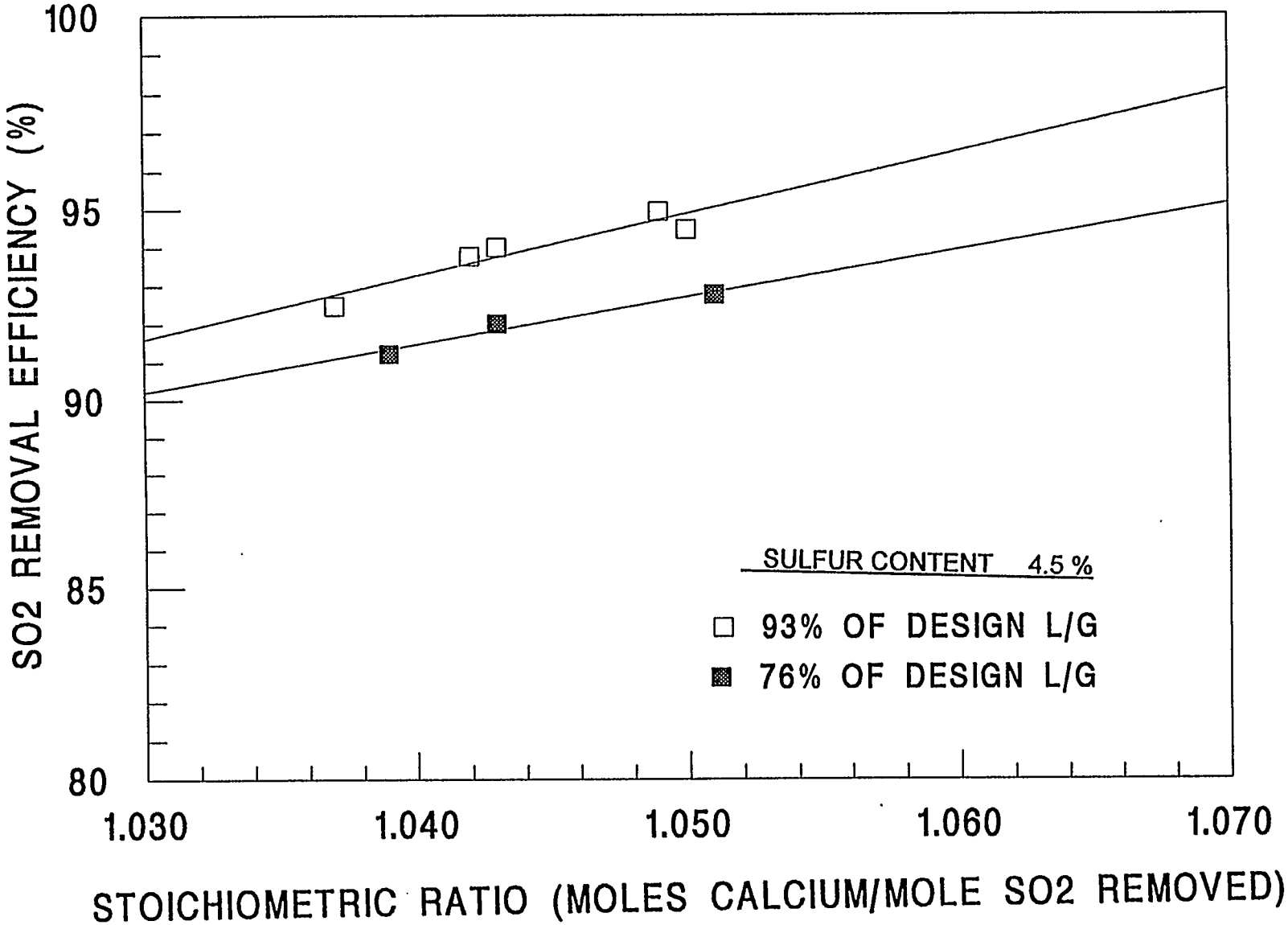

5.2 WES Testing

The overall objectives of the WES testing were to evaluate (1) the performance of nozzles, (2) the extent to which a closed loop system could be accomplished using WES, and (3) the effect of wastewater injection on system performance (i.e., ESP and FGD performance).

The WES was operated continuously for a 9-month period between 1 July 1994 and 31 March 1995.

Based on observations during the testing, it was determined that each nozzle was capable of injecting 3.5 gpm (for a total of 21 gpm in each duct work) for an approximately 20°F temperature drop. The average temperatures of the flue gas leaving the air heater on the West and East ducts were 353°F and 355°F, respectively (see Table I-1).

The setpoint for controlling the ESP inlet temperature was selected to be 300°F so that at all times the flue gas temperature would be above the sulfuric acid mist dew point (approximately 285°F). The flue gas temperature distribution leaving the air heaters was not uniform; thus an average 20°F temperature drop due to WES injection ensured operating the WES above the acid dew point at all times.

To evaluate zero discharge using the WES, it was decided to concentrate testing on the West duct of Unit 8. This decision was mostly due to the fact that the flue gas in the West duct was hotter and more uniform than in the East duct.

As stated above, the maximum wastewater injection in the West duct with a 20°F temperature drop was approximately 20 gpm (15 to 22 gpm operating range). The average chloride quantity generated by Unit 8 was about 230 lbs/hr. Assuming that one-half of this chloride would be on the East and one-half on the West duct of Unit 8, to maintain the closed loop with respect to chloride, each duct of Unit 8 should be able to evaporate the quantities of wastewater shown in the table below.

The following table presents the relationship between chloride concentration in the absorber and the amount of water needed to be evaporated to maintain a closed-loop system:

Chloride Concentration in Absorber (ppm)	WES Injection for Closed Loop Operation (gpm)
20,000	11.5
15,000	15.3
10,000	23.0
7,500	30.7

It was not possible to operate the WES during periods of low boiler load due to the 300°F minimum temperature limitation; as a result, the WES was run during daytime hours. Tables I-1 and I-2 show data during the period 25 January 1995 through 3 February 1995, which represent typical data for the WES operation. Figure I-1 shows the arrangement of the thermocouple array used downstream of the injection nozzles, which are shown in Figure I-2.

5.3 PowerChip® Gypsum

5.3.1 Technical Performance of PowerChip® Gypsum

The resulting PowerChip® Gypsum product was a stable, semi-dry pressure agglomeration which had a thickness of 1/8" to 1/4" and a face profile of 3/8" to 1-1/4" in length and width. The specific density of the PowerChip® Gypsum was about 90 #/ft^3 and an average untapped bulk density was in the range of 60-65 #/ft^3. The process included a final screening of chips and the finished products were consistently less than 10% minus #8 US mesh.

The PowerChip® Gypsum product was pure gypsum, $CaSO_4 \cdot H_2O$, without any chemical binders or additives. The process did not employ preheating, predrying or precalcining of the feed gypsum. This chip had no hemi-hydrate phase.

In this technology demonstration unit, the final product as PowerChip® Gypsum was continuously stacked out in a storage pile and loaded into trucks and railcars via front end loaders. In a commercial plant, it would be feasible to discharge directly into a silo or railcar.

The PowerChip® Gypsum product from this demonstration and commercialization unit was delivered and tested in full-scale trials at more than 8 wallboard plants and in more than 12 cement plants. In most cases, the PowerChip® Gypsum material flow properties were acceptable to the plant operator without modification. In some tests, the material feeders required adjustment to compensate for the difference in bulk density or to restrict the material from "flooding" into processing mills. Most plant trials were conducted at older units designed for a 2" x 0" natural rock gypsum feed source. The logistics of economic delivery of industrial gypsum to the customer's plant was another aspect evaluated in this PowerChip® Gypsum demonstration. This included covered hoppers in the range of 4,000 cubic feet to 4,785 cubic feet. Specific railcar descriptions were as follows:

- Norfolk and Southern, car class HCS63, a 50' covered hopper with 3 outlets sized for an open gate cross section of 46" x 22", with rack and pinion gate plate.

- Conrail, car class H54, a 55' covered hopper with 3 outlets sized for an open gate cross section of 25" x 22" with rack and pinion gate plate.

Several of these trials involved material transport via railcar of 1,000 miles or more and as much as 3 weeks in a railcar prior to discharge.

5.3.2 Weathering Results of PowerChip® Gypsum

Exposure of PowerChip® Gypsum to weather conditions was evaluated in lab accelerated weathering tests and also in outside pile placements. PowerChip® Gypsum endures exposure to rain, snow, and freeze/thaw cycles with the following observed effects:

- moisture (free water, not chemically bound) increased to about 10-11% in a heavy rain; chips did not dissolve but lost about 30-35% of their compression strength at 10% moisture conditions.

- exposure to hundreds of freeze/thaw cycles increased the internal stresses within the chips, and caused surface cracks and edge failures, resulting in some additional fines in outside unprotected piles.

- wet exposed chips regained their strength in outside storage piles after rain had stopped and after air drying to an equilibrium free moisture range of 5-7% depending on the ambient conditions.

These conclusions on weather effects suggest that a simple shed roof provides prudent protection for most site locations where chips would be stored or piled on the ground.

5.3.3 Flowability Index for PowerChip® Gypsum

Flowability of conventional FGD gypsum is a difficult challenge in terms of handling, storage, reclaim and feed into industrial equipment.

This is a result of the large quantity of similar sized particles, perhaps 92+% by weight in the range of 22-45 microns. Depending upon the dewatering process used in the FGD system, the industrial gypsum can be produced with a moisture (free water) as low as 6.5% or more typically at 8% or 12%. When this filter cake is stored outside, exposed to weather, it can become saturated to about 15% moisture.

A program was undertaken by Pure Air to characterize the flowability of gypsum at various moistures. This evaluation was performed by Hendrik Colijn of H. Colijn and Associates.

Research for the past 30 years by the pioneers in this field such as Andrew Jenike, I.A. Peschl, Henk Colijn and Jerry Johanson was founded on work by civil engineers studying soil mechanics.

To characterize a cohesionless bulk solid, it was only necessary to determine the angle of internal friction. For the more common and problematic cohesive bulk solids, the following must be measured:

- cohesion
- effective angle of friction
- unconfined yield strength of the bulk solid

These "mechanical properties" were measured by various shear tests:

- unconfined uni-axial shear test method
- bi-axial shear test method
- tri-axial shear test method

The practical applications of these measured strength values were primarily in the proper and prudent sizing of hopper and bin outlet dimensions.

Also, by measuring the unconfined yield strength as a function of the consolidation pressure, a FLOW FUNCTION was established to describe the specific behavior of a specific bulk solid at various moisture and consolidation conditions. (An example of a FLOW FUNCTION plotted for a specific industrial gypsum is included as Figure 5-24.)

Once the FLOW FUNCTION was established, engineers skilled in this specialized area can use established relationships for bin and hopper flow conditions to predict or recommend the outlet size for mass flow, funnel flow, or expanded flow patterns.

The key consideration in this process was to measure and understand the material strength of the bulk solid or granular product via initial testing; then, if any arching or doming situations could develop inside the bin, the design engineer should ensure the creation of a geometric configuration whereby the stresses in the material are greater than the strength of the material.

The basic flow criterion requires $f<s$ to maintain gravity flow, where f=strength and s=stress.

See Figure 5-25 as an example of the flow criterion concept.

The filter cake form of gypsum was prepared and placed in a 3-3/4" diameter size shear cell tester with very repeatable results. Attached as Figure 5-26 are results for several gypsum sources. Attached as Figure 5-27, predicted design requirements for bins and hoppers for a specific gypsum were developed. Figure 5-28 is an example of critical diameters for flow in cylindrical hoppers using FGD gypsum as a filter cake, and Figure 5-29 compares industrial gypsum to Nova Scotia natural gypsum.

As results of the PowerChip® Program were evaluated, several performance observations were obvious:

- PowerChip® Gypsum flowed consistently and without interruption from a feed bin with a 14" x 16" opening into a weigh belt feeder running at 2 tons per hour.

- PowerChip® Gypsum flowed consistently and without interruption from a silo with an outlet of 16" x 20" onto a weigh belt feeder running at 5 tons per hour.

- PowerChip® Gypsum flowed through 18" rotary rock feeders into Raymond Mills at a rate of about 24 tons per hour.

- PowerChip® Gypsum flowed out of conventional bottom discharge railcars of 100 ton capacity and was unloaded in the range of 15-30 minutes with conventional use of "pocket type vibrators" or top shakers.

FIGURE 5-24

EXAMPLES OF FLOW FUNCTION PLOTS FOR POWERCHIP* GYPSUM

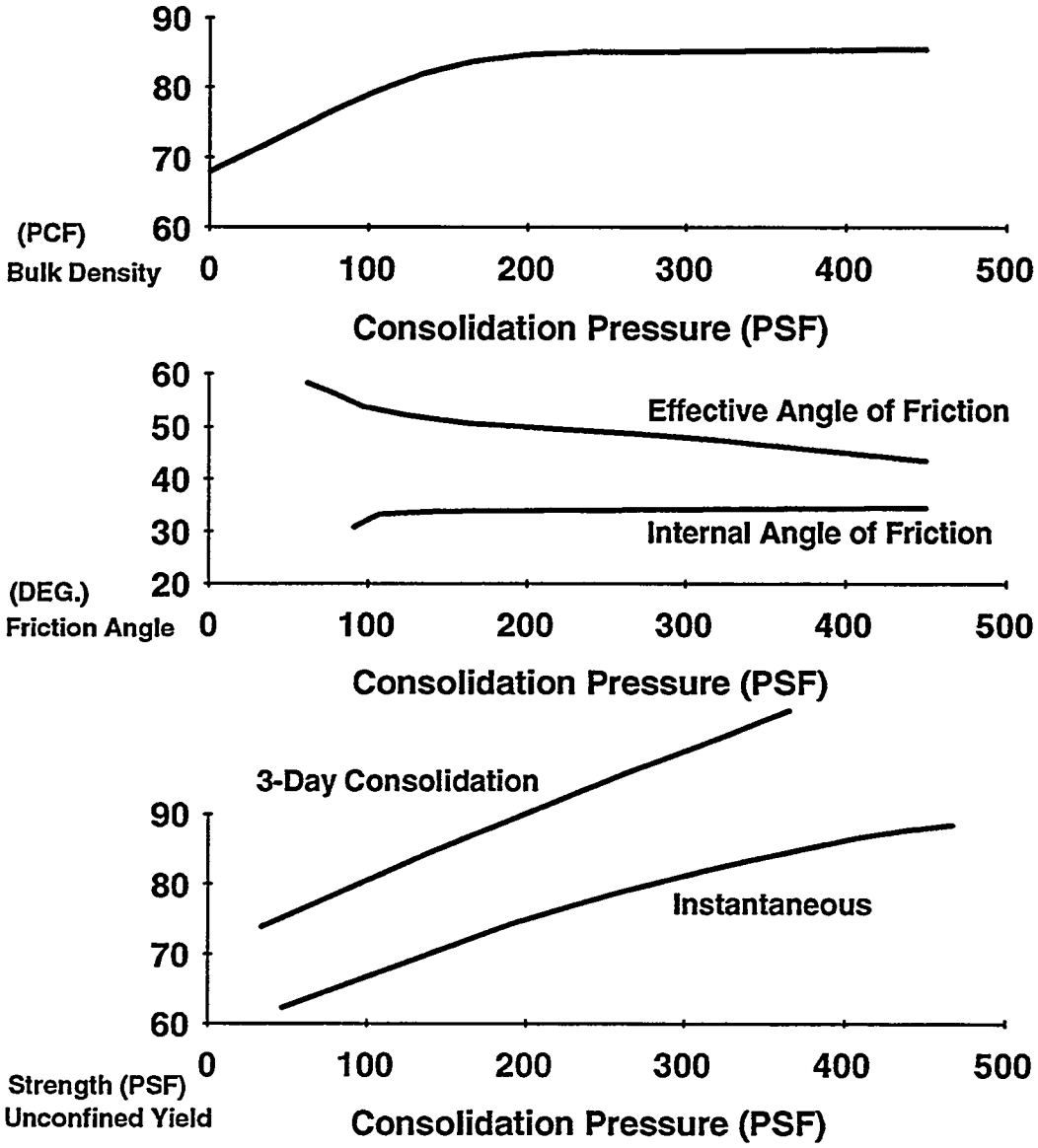

Source of Gypsum: Pure Air Bailly/NIPSCO AFGD

FIGURE 5-25

EXAMPLE OF FLOW CRITERION CONCEPTS FOR A BULK MATERIAL ELEMENT IN A CYLINDRICAL SILO

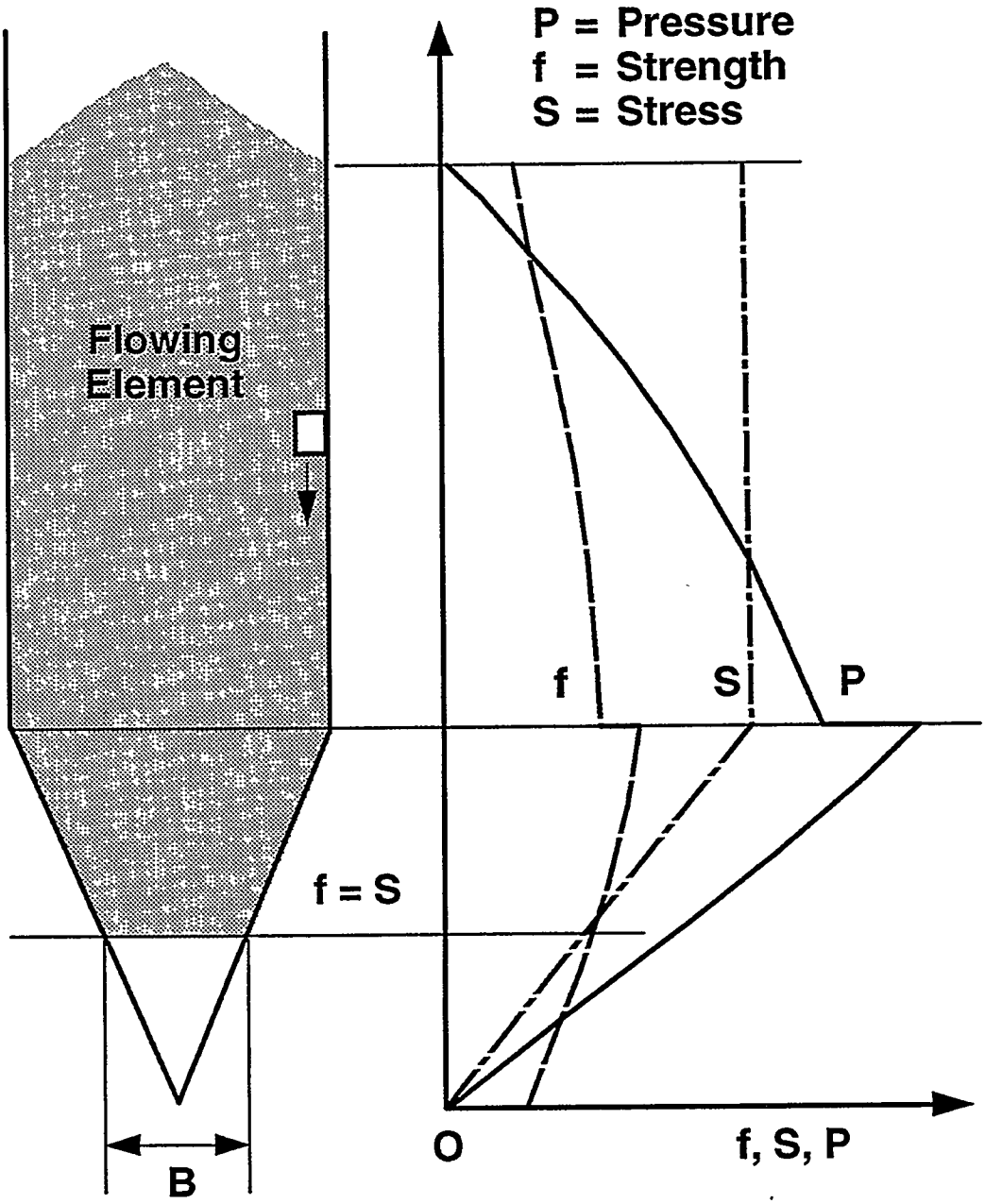

FIGURE 5-26

EXAMPLE OF FLOW FUNCTION PLOTS FOR VARIOUS FGD GYPSUMS IN FREE MOISTURE RANGE OF 7 - 15% AS FILTER CAKE

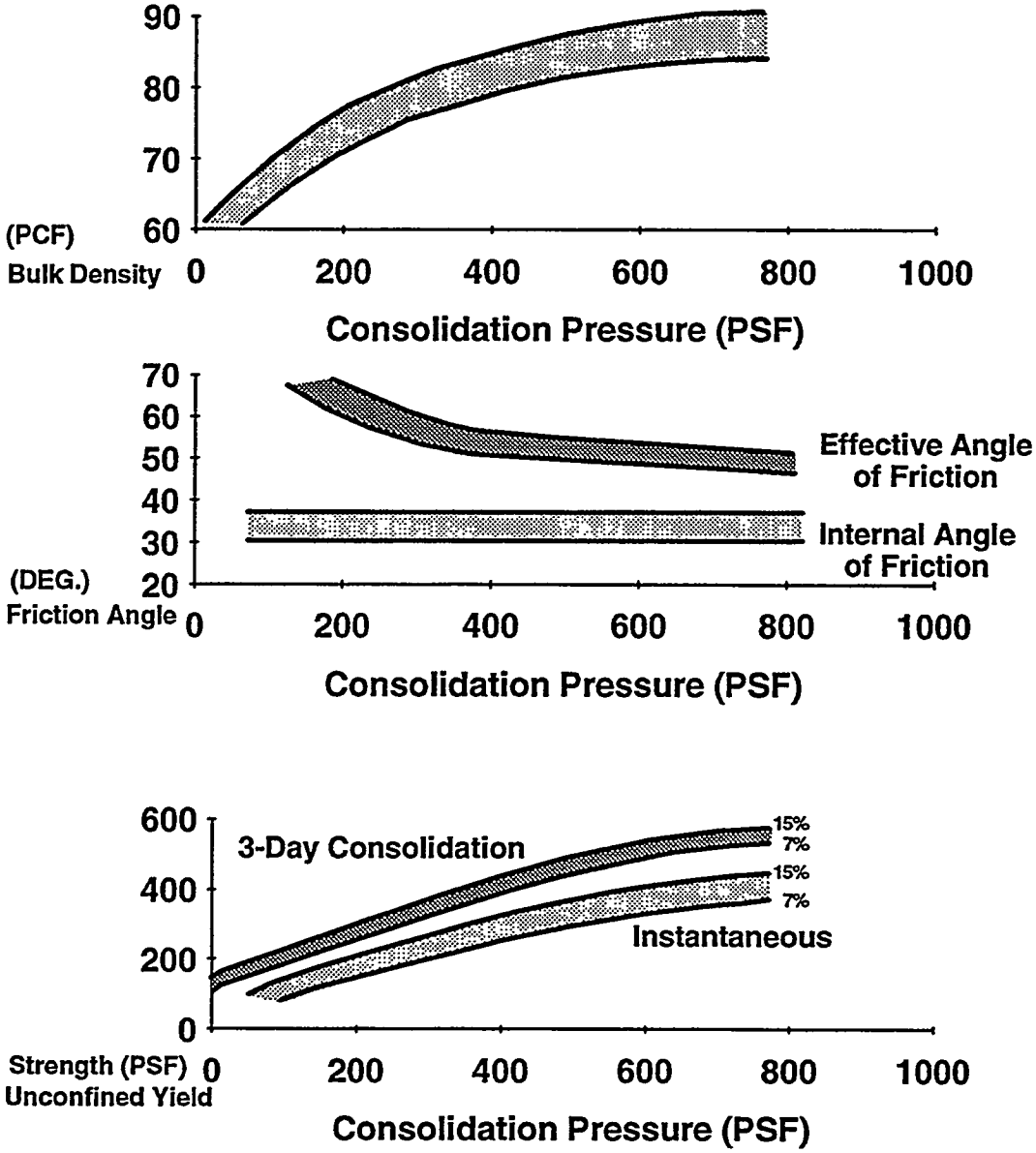

FIGURE 5-27

EXAMPLE OF DESIGN REQUIREMENTS FOR A SPECIFIC TESTED FGD GYPSUM AS A FILTER CAKE - NOT AGGLOMERATED, CHIPPED OR BRIQUETTED

	Free Moisture in Gypsum		
Bin & Hopper Design Criteria	7.0%	11.0%	15.0%
Critical Arching Dimension (feet) for mass-flow:			
Steady flow:			
round outlet diameter	5.0	5.1	5.2
slot outlet dimension	2.4 X 7.2	2.4 X 7.2	2.5 X 7.5
Time Consolidation (3 days):			
round outlet diameter	9.3	9.5	9.8
slot outlet dimension	4.3' X 12.9'	4.4' X 13.2'	4.5'X 13.5'
Stable rat-hole diameters: (feet)			
Steady flow	9.6	10.0	10.5
Time Consolidation (3 days)	14.0	16.0	*
Minimum hopper slope angles (with horizontal) for mass flow (deg):			
Cone:			
UHMP TIVAR 88-2	70	73	77
304-2B stainless steel	90	90	90
Wedge:			
UHMP TIVAR 88-2	62	66	70
304-2B stainless steel	85	85	85
Self-cleaning hopper and chute angle (with horizontal) (deg):			
UHMP TIVAR 88-2	60	75	80
304-2B stainless steel	90	90	90
Smooth carbon steel	90	90	90

*Too large to compute based on available test data

Source of Gypsum: Kashima Kita Power Plant in Japan equipped with Mitsubishi AFGD unit

FIGURE 5-28

EXAMPLE OF CRITICAL DIAMETERS FOR FLOW IN CYLINDRICAL HOPPERS FGD GYPSUM AS A FILTER CAKE WITH MOISTURES FROM 1 - 15%

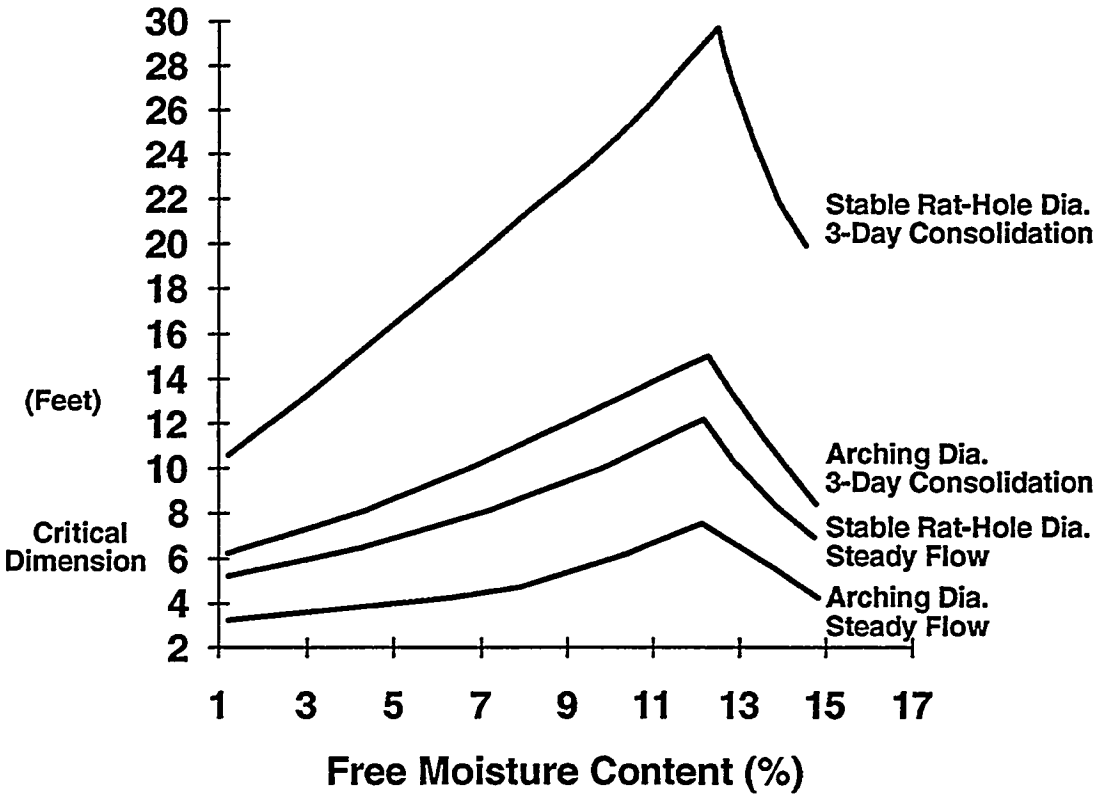

Source of Gypsum: Pure Air Bailly/NIPSCO AFGD

FIGURE 5-29

COMPARISON OF INDUSTRIAL GYPSUM TO NOVA SCOTIA NATURAL GYPSUM

Basic Material Flow Criteria and Hopper Design	Industrial Gypsum from FGD Unit[1]		Natural Rock Gypsum from Nova Scotia[2]		
	PowerChip® Gypsum	Filter Cake Gypsum			
Free Moisture	5.6% Ave.	6.5-8.5% range	5.3%	8.0%	10.5%
Critical Arching Dimension (feet) for mass-flow:					
Steady flow:					
round outlet diameter	1.3	5.0	1.6	1.75	2.1
slot outlet dimension	0.6x1.8	2.2x6.6	0.8x2.4	0.9x2.7	1.0x3.0
Time Consolidation:					
round outlet diameter	10.0	11.1	4.5	5.5	6.6
slot outlet dimension	5 x15	5x15	2.1x6.3	2.6x7.8	3.0x9.0
Stable rat-hole diameters: (feet)					
Steady flow	4	8.5	3.2	3.6	4.2
Time Consolidation	22.1	22.3	13.0	14.7	17
Minimum hopper slope angles (with horizontal) for mass flow (deg):					
Cone:					
UHMP	74	75	75	73	72
304-2B stainless steel	80	90	80	80	77
Wedge:					
UHMP	64	65	65	63	62
304-2B stainless steel	70	81	70	70	67
Self-cleaning hopper and chute angle (with horizontal) (deg):					
UHMP	52	53	60	55	55
304-2B stainless steel	60	75	65	65	60
Rusted carbon steel	70	75	70	70	70

Notes:
[1] Source of gypsum: Pure Air Bailly/NIPSCO AFGD
[2] Source of gypsum: National Gypsum Company

6.0 ENVIRONMENTAL PERFORMANCE

6.1 Impact on the Environment

Removal of SO_2 from flue gas does not come without a cost and other tradeoffs. Evaluation of the effect of AFGD unit operation on the environment is part of the three year DOE program conducted at the Bailly station. This section of the program is covered by the environmental monitoring plan (EMP), which calls for a series of reports on the various waste streams associated with the operation of the AFGD system. The subject of air toxics has become important, since it is recognized that in addition to SO_2 and CO_2 generation, there are certain quantities of volatile airborne metals that are released to the atmosphere during the combustion of coal. A series of special tests for air toxics was conducted during six special coal runs and the results are summarized in the respective DOE test reports 1 through 6. In addition to testing at the Bailly Station, another study was conducted by the Southern Research Institute that was part of a survey of sixteen utility power plants.

Some order of magnitude calculations involving operation of the power station with and without the AFGD system are given in the following discussion to show the reader the general impact of scrubber operation on the environment.

The nominal coal consumption rate for the Bailly facility is 5,000 tons/day. Assuming 85% load factor with 85% availability and a typical coal analysis of 3.2% sulfur, 10% ash and .07% Cl, the power station will release to the environment the following quantities (without controls):

TABLE 6-1
NO AFGD IN OPERATION
TONS/YEAR

Components in Flue Gas	Generated By Combustion	Recycle	Discharge		
			Land	Air	Water
SO_2	84,400		8,440	75,960	Nil
Ash	132,000	65,350	65,350	1,300	Nil
HCl	950		Nil	950	Nil

Table 6-2 shows the impact on the environment with the scrubber in operation.

TABLE 6-2
AFGD IN OPERATION
TONS/YEAR

Components in Flue Gas	Generated By Combustion	Recycle	Discharge		
			Land	Air	Water
SO_2	84,400	71,600	8,440	3,800	Nil
Ash	132,000	65,350	65,350	650	Nil
HCl	950		Nil	Nil	950

Note: The quantities calculated assume 95% removal of SO_2 and 99.5% removal of ash.

The term recycle in these tables represents quantities of material that are reused. The SO_2 number represents that quantity of SO_2 contained in wallboard gypsum produced by the facility. The fly ash is recycled in the cement industry.

The numbers given are typical for the Bailly Station, but change significantly from day to day, and season to season. It is apparent from these order of magnitude numbers that the benefit of the scrubber is to remove SO_2 and fly ash. The downside impact is that some ionic species show up in the waste water; as shown in Table 6-2, there is an increase in chlorides and sulfates in the wastewater stream.

The Environmental Monitoring Reports issued during the three year testing period show the analysis of the various waste streams produced by the facility.

An important feature of the DOE demonstration project is the WES. The WES is designed to reduce the effect of scrubber operation on wastewater by the evaporation of some or all of the water in the hot flue gas leaving the power station. The solids remaining are collected by the ESP and removed with the fly ash. The result is a slight increase in solids to the landfill (or to sales) and a reduction in the impact on water quality.

6.2 Waste Streams and Their Disposal

The waste streams identified in the EMP are as follows:

1.0 Class I Source Emissions Discharges
1.1 Air Emissions
- 1.1.1 Bailly Station Stack
- 1.1.2 AFGD System Stack Without WES Operation (APC-200)
- 1.1.3 AFGD System Stack With WES in Operation (APC-200 Coal)
- 1.1.4 AFGD System Stack Without WES Operation
- 1.1.5 AFGD System Stack With WES Operation
- 1.1.6 Before AFGD System Without WES Operation (APC-200 Coal)
- 1.1.7 Before AFGD System With WES (APC-200)
- 1.1.8 Before AFGD System Without WES (Different Coal)
- 1.1.9 Before AFGD System With WES
  - 1.1.9.1 $SO_2/SO_3/H_2SO_4$ (Different Coal)

1.2 Wastewater Discharges
- 1.2.1 Main Outfall
- 1.2.2 Main Outfall - Sulfate (Different Coal)
- 1.2.3 Sewage Outfall 201
- 1.2.4 AFGD Wastewater Treatment Facility Inlet (APC-200 Coal)
- 1.2.5 AFGD Wastewater Treatment Facility Inlet-Sulfate (Different Coal)
- 1.2.6 AFGD System W/W Facility - Effluent (APC-200)
- 1.2.7 AFGD System W/W Facility Effluent Sulfate (Different Coal)
- 1.2.8 Inlet Process Water

1.3 Solid and Solid Waste Discharges
- 1.3.1 Coal Used for APC-200 Test Analysis
- 1.3.3 Limestone
- 1.3.4 Hydrated Lime
- 1.3.5 Gypsum
- 1.3.6 Gypsum-Without WES in Operation (Different Coal)
- 1.3.7 Gypsum-With WES in Operation (Different Sulfur Coal)
- 1.3.8 Ash - APC-200 Test
- 1.3.9 Ash - APC-200 Similar Coal Without WES in Operation
- 1.3.10 Ash - APC-200 Coal With WES in Operation
- 1.3.11 Ash - Different Coal Without WES in Operation
- 1.3.12 Ash - Different Coal With WES in Operation

2.0 Class II Source Emissions and Discharges (Compliance Monitoring)

2.1 Air Emissions

- 2.1.1 Bailly Station Stack
- 2.1.2 AFGD Inlet Duct 1
- 2.1.3 AFGD Inlet Duct 2
- 2.1.4 AFGD System Outlet Stack

2.3 Solid and Solid Waste Discharges

- 2.3.1 Coal
- 2.3.2 Gypsum
- 2.3.3 Ash
- 2.3.4 Waste Water Treatment Solids

This list is derived from the EMP, as are all of the possible permutations involving the use of the WES.

6.3 Potential Environmental Concerns

The operation of a wet limestone scrubber, as with virtually any chemical process, generates waste materials. The removal of SO_2 from a flue gas stream benefits the environment because of the reduction of acid rain precursors. In accomplishing this removal, the wet limestone scrubber releases CO_2 and generates a liquid waste stream as well as two solid streams--one gypsum and the other a fly ash gypsum sludge. The AFGD project has successfully demonstrated the production of commercial grade gypsum for wallboard manufacture, and as a result there has been no disposal of gypsum to a landfill. The sludge is more troublesome since it must be landfilled. The quantity of sludge disposed of has been remarkably low since the ESPs have been working well and the recycling of fly ash components into the gypsum has been successful. This material has the same basic constituents as fly ash with water and some gypsum. It has been the goal of the project to achieve zero discharge. The PowerChip® program has offered a way of disposal of sludge by combining it with gypsum and producing a flaked product that is acceptable to the concrete industry.

Wastewater poses more of a problem for the operation of an FGD since a certain amount of high chloride bearing water must be removed from the system to maintain an ion balance. This stream of 60-80 gpm is small in comparison to other streams, but nevertheless poses some impact on the environment. The WES addresses this problem. The ability to evaporate wastewater in the flue gas and remove the solids via the ESP offers a great deal of potential to the power industry to solve their water problems.

The original installation of the WES was plagued with pluggage of the high pressure nozzles and never produced the particle size distribution required for the successful operation of the system. The second phase of the WES using dual fluid nozzles was very successful with over 9 months of operation without significant impact on the ESPs. The demonstration of the WES technology was very successful. The results of the testing were such that the unit has been commercialized in our subsequent FGD projects.

7.0 ECONOMICS

This section provides estimated economics for an AFGD system at a commercial power plant having a normal capacity of 500 MWe (net). These economics are derived from cost and performance data on the demonstration plant, but site-specific factors and special requirements of the demonstration unit are eliminated. Because of the very nature of AFGD facilities, the capital costs are applicable to retrofit applications. As stated throughout this report, the reagent used in this program is limestone, and the limestone reagent ratio of 1.04 to 1 is assumed for the economic calculation.

7.1 Economic Parameters

TABLE 7-1
ECONOMIC PARAMETERS

Item	Units	Value
Cost of debt	%	8.5
Dividend rate for preferred stock (pre-tax)	%	7.0
Dividend rate for common stock (pre-tax)	%	7.5
Debt/total capital	%	50.0
Preferred stock/total capital	%	15.0
Common stock/total capital	%	35.0
Income tax rate	%	38.0
Investment tax credit	%	0.0
Property taxes and insurance	%	3.0
Inflation rate	%	4.0
Discount rate (with inflation)	%	7.925
Discount rate (without inflation)	%	3.774
Escalation of raw materials above inflation	%	0.0
Construction period	Years	2
Allowance for funds during construction	%	3.81
Construction downtime	Days	0
Remaining life of power plant	Years	15
Year for cost presented in this report	-	1995
Royalty allowance (based on total process capital)	%	0.5
Capital charge factor (current dollars)		0.160
(constant dollars)	-	0.124
O&M cost levelization factor (current dollars)		1.314
(constant dollars)	-	1.000
Power plant capacity factor	%	65
Sales tax rate	%	5.0
Cost of freight for process equipment	%	2.0
General facilities/total process capital	%	10.0
Engineering and home office fees/total process capital	%	10.0

7.2 Estimate of Process Capital Costs

7.2.1 Major Equipment Costs

TABLE 7-2
MAJOR EQUIPMENT COSTS

Section No.	Section Description	Installation Cost/Unit	Freight Cost/Unit	Installation Cost/Unit	Total Cost Per Unit	Number of Units	Total Cost
	PURCHASED EQUIPMENT						
06.00.00	Manual Valves	$133,394	$4,002	$333,486	$470,882	1	$470,882
12.10.00	Digital Control System	$719,922	$21,598	$1,799,806	$2,541,326	1	$2,541,326
12.20.00	Analyzers	$8,470	$254	$21,176	$29,900	1	$29,000
12.21.00	Other Analyzers	$160,482	$4,814	$401,204	$566,500	1	$566,500
12.40.00	Control Valves	$512,229	$15,367	$1,280,572	$1,808,168	1	$1,808,168
12.50.00	Instruments	$537,099	$16,113	$1,342,747	$1,895,959	1	$1,895,959
13.20.00	Medium Voltage Electric Equ.	$135,636	$4,069	$339,091	$478,796	1	$478,796
13.60.00	Power Control Rooms	$1,494,938	$44,848	$3,737,345	$5,277,131	1	$5,277,131
18.01.01	Fixed Air Spargers	$118,750	$3,563	$296,875	$419,188	1	$419,188
18.02.00	Absorber Tank Agitators	$54,522	$1,636	$136,306	$192,464	4	$769,856
18.11.00	Oxidation Air Blowers	$184,301	$5,529	$460,752	$650,582	4	$2,602,328
18.12.00	Limestone Pneumatic Blower	$4,928	$148	$12,320	$17,396	2	$34,792
18.13.00	Limestone Unloading Blower	$48,457	$1,454	$121,143	$171,054	3	$513,162
18.15.00	Gypsum conveyor/Tripper	$389,173	$11,675	$972,933	$1,373,781	1	$1,373,781
18.19.00	Mist Eliminator Elements	$162,970	$4,889	$407,424	$575,283	1	$575,283
18.21.00	Instrument Air Compressors	$99,818	$2,995	$249,546	$352,359	2	$704,718
18.22.00	Centrifuges	$197,538	$5,926	$493,844	$697,308	9	$6,275,772
18.24.00	WES Spray Nozzles	$127,920	$3,838	$319,801	$451,559	1	$451,559
18.25.00	Absorber Recirculation Pumps	$103,396	$3,102	$258,489	$364,987	12	$4,379,844
18.26.00	Absorber Bleed Pumps	$148,884	$4,467	$372,211	$525,562	2	$1,051,124
18.30.00	Thickener Overflow Pumps	$9,529	$286	$23,822	$33,637	2	$67,274
18.31.00	Wastewater Pump	$34,802	$1,044	$87,005	$122,851	2	$245,702
19.01.00	Limestone Truck Scale	$39,810	$1,194	$99,524	$140,528	1	$140,528
19.02.00	Cranes, Hoists & Monorails	$282,783	$8,483	$706,957	$998,223	1	$998,223
19.03.00	Ductwork Expansion Joints	$51,157	$1,535	$127,891	$180,583	1	$180,583
19.04.00	Absorber Grid Packing	$146,211	$4,386	$365,527	$516,124	1	$516,124
19.13.00	Glycol Equipment	$28,602	$858	$71,504	$100,964	1	$100,964
19.22.00	Centrifuge Feed Tank	$80,982	$2,429	$202,455	$285,866	1	$285,866
	Total						$34,754,433

[A]	Subtotal Installed Cost	$ 34,754,433	[C]	Process Contingency (.05 x [A]+[B])	$ 1,911,493
[B]	Retrofit Cost (.1 x [A])	$ 3,475,443	[D]	Total Installed Equipment Cost	$ 40,141,369

7.2.2 Total Capital Requirement (500 MWe)

TABLE 7-3
TOTAL CAPITAL REQUIREMENT

Area No.	Total Installed Equipment Cost	10^6	$/kW
100	Raw material receiving and handling system	4.0	8.00
200	Fuel preparation and storage system	0	0.
300	Fuel and oxidant feed handling system	0	0
400	Combustion/steam generation system	0	0
500	Combustion modification equipment	0	0
600	Fuel gas processing and handling system	0	0
700	Power generating system	0	0
800	SO_2 removal system	25.97	51.94
900	NOx removal system	0	0
1000	Particulate removal system	0	0
1100	Flue gas handling system	2.0	4.00
1200	Raw material regeneration system	0	0
1300	By-Product processing and handling system	8.0	16.00
1400	Waste handling system	0	0
1500	Common support systems	0	0
1600	Other systems	0	0
(A)	Total Process Capital (sum of process areas)	39.97	79.94
(B)	General Facilities (10% of A)	4.00	8.00
(C)	Engineering and home office fees (10% of A)	4.00	8.00
(D)	Project contingency (5% of A+B+C)	2.40	4.80
(E)	Total Plant Cost (A+B+C+D)	50.37	100.74
(F)	Allowance for funds during construction (3.8% of E)	1.92	3.84
(G)	Total Plant Investment (E+F)	52.28	104.55
(H)	Royalty allowance (.5% of A)	0.20	0.40
(I)	Preproduction costs (3 months of start-up)	1.15	2.30
(J)	Inventory capital	1.00	2.00
(K)	Initial catalyst and chemicals	.20	.40
(L)	Subtotal Capital (G+H+I+J+K)	54.83	109.66
(M)	Cost of construction downtime	.78	1.56
(N)	Total Capital Requirement (L+M)	55.61	111.22

7.3 Projected Operating and Maintenance Costs

Base Case 500 MWe at 3.0% Sulfur in coal.

TABLE 7-4
TOTAL O&M COSTS

Fixed O&M Costs	Units	Quantity	$/Unit	$10⁶/yr
Operating labor	Man hr/hr	19	23.00	0.91
Maintenance labor				0.48
Maintenance material				0.72
Administration/support labor				0.42
Subtotal Fixed Costs				2.52
Variable Operating Costs	**Units/hr**	**Quantity**	**$/Unit**	**$10⁶/yr**
Sorbent				
Limestone	Ton	18.4	25.51	2.67
Chemicals/Lubes				.035
Utilities				
Electric power	kWh	5,300	.03	0.91
By-Product Credits				
Gypsum	Ton	30.6	1	(0.17)
Emission Credits	Ton	1.36	150	(1.16)
Subtotal Variable Cost				2.29
TOTAL O&M COST (FIXED AND VARIABLE)				4.81

7.4 Summary of Performance and Economics

TABLE 7-5
SUMMARY OF PERFORMANCE AND COST DATA

Power Plant Attributes	Units	Value
Plant capacity, net	MWe	500
Power produced, net	10^6 kWh/yr	2,847
Capacity factor	%	65
Plant life	yr	15
Coal feed	10^6 tons/yr	1.14
Sulfur in coal	wt%	3.0

Emission Control Data	Units	SO_2	NOx	TSP	PM_{10}
Removal efficiency	%	90	NA	NA	NA
Emissions standard	lb/10^6 Btu	1.2	NA	.2	NA
Emissions without controls	lb/10^6 Btu	4.8	NA	.2	NA
Emissions with control	lb/10^6 Btu	0.48	NA	.2	NA
Amount removed	tons/yr	61,495	NA	NA	NA

	Current Dollars		Constant Dollars	
Levelized Cost - SO_2 Basis	Factor	$/ton removed	Factor	$/ton removed
Capital Charge (incl. Fixed Cost)	0.160	142	0.124	1.10
Variable O&M Cost	1.314	103	1.000	78
Total Cost	-	245	-	188

7.5 Effect of Variables on Economics

Capital Cost of FGD Systems

Table 7-6 shows the variation of capital cost for an AFGD system with unit size and sulfur content of the coal feed. The cost data are shown in $/kW, based on a turnkey plant. The evaluation includes unit sizes of 100, 300, and 500 MW, and a coal feed sulfur content of 1.5%, 3.0%, and 4.5%.

Calculation of Levelized Cost Data for FGD Systems

Table 7-7 shows the variation of levelized cost for an AFGD system with unit size and sulfur content of the coal feed.

The calculation of levelized cost is based on guidelines discussed in EPRI's Technical Assessment Guide. The levelized cost, in $/ton SO_2 removed, is the sum of the levelized fixed cost and the levelized variable cost divided by the tons of SO_2 removed:

$$\text{Levelized Cost} = (\text{Capital Recovery} + \text{Levelized Fixed Costs} + \text{Levelized Variable Cost}) \div (\text{tons of } SO_2 \text{ removed})$$

The capital recovery costs were derived by multiplying the capital investment by the levelized fixed charge rate. The levelized fixed costs include property taxes, income taxes and insurance.

The levelized annual variable costs are derived from the estimate of first year costs adjusted by the following formula:

$$\text{Levelized Variable Cost} = \text{First Year Variable Cost} * (P/AE, i\,\%, esc\,\%, yrs) * (A/P, i\%, esc\,\%, yrs)$$

where: P/AE factor calculates the present worth of a series of dollar amounts which escalate and a uniform escalation rate. See Table 7-8.

A/P factor calculates the levelized annual equivalent. See Table 7-9.

The calculation of the variable cost includes the cost of labor, maintenance, limestone, and power consumption offset by revenue for gypsum sold and emission allowances sold. All quantity and cost assumptions are listed in Table 7-7.

TABLE 7-6
CAPITAL COST FOR AN AFGD SYSTEM*

	Case 1	Case 2	Case 3	Case 4	Case 5	Case 6	Case 7	Case 8	Case 9
Plant Size (MW)	100	100	100	300	300	300	500	500	500
Sulfur Content of Coal, wt%	1.5	3.0	4.5	1.5	3.0	4.5	1.5	3.0	4.5
Plant Cost ($000's)	19,284	20,970	22,655	33,402	36,320	39,239	43,121	46,889	50,657
Capital Cost ($/kW)	193	210	227	111	121	131	86	94	101

* Current dollar analysis

TABLE 7-7
LEVELIZED COST FOR AN AFGD SYSTEM

INPUTS:	Case 1	Case 2	Case 3	Case 4	Case 5	Case 6	Case 7	Case 8	Case 9
Plant Size (MW)	100	100	100	300	300	300	500	500	500
Sulfur Content of Coal	1.5%	3.0%	4.5%	1.5%	3.0%	4.5%	1.5%	3.0%	4.5%
Capacity Factor	65%	65%	65%	65%	65%	65%	65%	65%	65%
Heat Rate (Btu/kwh)	10,000	10,000	10,000	10,000	10,000	10,000	10,000	10,000	10,000
Heat Value (Btu/lb)	12,500	12,500	12,500	12,500	12,500	12,500	12,500	12,500	12,500
Fuel Consumption (TPY)	227760	227760	227760	683280	683280	683280	1138800	1138800	1138800
Annual Operating Costs ($000's) (Labor, Maintenance, Admin.)	$3,911	$4,251	$4,421	$4,251	$4,421	$4,591	$4,591	$4,761	$4,897
Sulfur Removal	90%	90%	90%	90%	90%	90%	90%	90%	90%
Sulfur Dioxide Removed(TPY)	6150	12299	18449	18449	36897	55346	30748	61495	92243
Emissions Allowances Sold (TPY)	738	1476	2214	2214	4428	6641	3690	7379	11069
Emission Allowance Value ($/ton)	$150	$150	$150	$150	$150	$150	$150	$150	$150
Limestone Consumption (dry TPY)	10401	20802	31203	31203	62407	93610	52005	104011	156016
Limestone Cost ($/dry ton)	$25.00	$25.00	$25.00	$25.00	$25.00	$25.00	$25.00	$25.00	$25.00
Gypsum TPY (dry)	17,445	34,890	52,335	52,335	104,670	157,005	87,225	174,450	261,675
Gypsum($/d ton)	$1.00	$1.00	$1.00	$1.00	$1.00	$1.00	$1.00	$1.00	$1.00
Power Consumption (KW)	1200	1350	1550	2700	3200	3800	4700	5300	6000
Power Cost (c/kwh)	3.0	3.0	3.0	3.0	3.0	3.0	3.0	3.0	3.0
CALCULATED COSTS ($000'S):									
Capital Recovery (1)									
15 year life	$3,047	$3,313	$3,579	$5,277	$5,739	$6,200	$6,813	$7,408	$8,004
20 year life	$2,777	$3,020	$3,262	$4,810	$5,230	$5,650	$6,209	$6,752	$7,295
Levelized Fixed Cost (2)									
15 year life	$752	$818	$884	$1,303	$1,416	$1,530	$1,682	$1,829	$1,976
20 year life	$752	$818	$884	$1,303	$1,416	$1,530	$1,682	$1,829	$1,976
Levelized Variable Costs (3)									
15 year life	$5,533	$6,205	$6,666	$6,701	$7,623	$8,568	$7,979	$9,318	$10,635
20 year life	$5,860	$6,571	$7,060	$7,096	$8,073	$9,074	$8,450	$9,868	$11,263
Total Levelized Cost									
15 year life	$9,332	$10,336	$11,129	$13,281	$14,779	$16,298	$16,474	$18,555	$20,615
20 year life	$9,389	$10,408	$11,206	$13,209	$14,720	$16,255	$16,341	$18,449	$20,533
Levelized Control Cost ($/ton SO2 removed)									
15 year life	$1,518	$840	$603	$720	$401	$294	$536	$302	$223
20 year life	$1,527	$846	$607	$716	$399	$294	$531	$300	$223
Levelized Control Cost (mils/kwh)									
15 year life	16.390	18.152	19.546	7.775	8.652	9.541	5.786	6.517	7.241
20 year life	16.489	18.279	19.680	7.732	8.617	9.516	5.740	6.480	7.212

* Current Dollar Analysis

(1) Capital Recovery
- 15 yr. life assumes 15.8% fixed charge rate
- 20 yr. life assumes 14.4% fixed charge rate

(2) Fixed Costs include property taxes, income taxes, and insurance.
- 15 yr. life assumes 3.9% fixed charge rate
- 20 yr. life assumes 3.6% fixed charge rate

(3) Variable Costs include costs and offsetting revenues subject to inflation or variation in the production rate of the plant;
- Costs include labor, maintenance, limestone, and power consumption and revenues include gypsum and emission allowances.
- Levelized cost assumes 4% inflation, and a 10% minimum acceptable return.

TABLE 7-8
PRESENT WORTH OF AN ESCALATING SERIES TABLES

MAR = 8.0%

ESCALATION	LIFE 5	10	15	20	25	30	35	40
0.0%	3.99271	6.71008	8.55948	9.81815	10.67478	11.25778	11.65437	11.92461
1.0%	4.10782	7.04614	9.14792	10.65132	11.72671	12.49593	13.04615	13.43973
2.0%	4.22588	7.40129	9.78734	11.58028	12.92752	13.93986	14.70055	15.27215
3.0%	4.34696	7.77664	10.48259	12.61754	14.30198	15.63097	16.67953	17.50681
4.0%	4.47113	8.17337	11.23895	13.77756	15.87924	17.61967	19.06081	20.25412
5.0%	4.59845	8.59273	12.06223	15.07589	17.69360	19.96739	21.94244	23.65800
6.0%	4.72899	9.03602	12.95876	16.53149	19.78543	22.74904	25.44822	27.90656
7.0%	4.86281	9.50463	13.93549	18.16498	22.20225	25.05604	29.73469	33.24616
8.0%	5.00000	10.00000	15.00000	20.00000	25.00000	30.00000	35.00000	40.00000
9.0%	5.14062	10.52567	16.16060	22.06337	28.24453	34.71721	41.49514	48.59274
10.0%	5.28473	11.07725	17.42636	24.38552	32.01336	40.37413	49.33825	59.58292
11.0%	5.43242	11.66245	18.80718	27.00092	36.39768	47.17409	59.53272	73.70587
12.0%	5.58376	12.28104	20.31389	29.94866	41.50479	55.36344	71.99019	91.93024
13.0%	5.73883	12.93492	21.95831	33.27303	47.46089	65.25148	87.55964	115.53253
14.0%	5.89769	13.62605	23.75334	37.02418	54.41436	77.20253	107.06425	146.19520

MAR = 10.0%

ESCALATION	LIFE 5	10	15	20	25	30	35	40
0.0%	3.79079	6.14457	7.60608	8.51356	9.07704	9.42691	9.64416	9.77903
1.0%	3.89866	6.44291	8.10327	9.18681	9.89392	10.33538	10.65653	10.85305
2.0%	4.00927	6.75782	8.64208	9.93382	10.81938	11.42647	11.84266	12.12797
3.0%	4.12268	7.09026	9.22637	10.76399	11.87079	12.66789	13.24096	13.65376
4.0%	4.23894	7.44123	9.86039	11.68793	13.06854	14.11151	14.89942	15.49464
5.0%	4.35812	7.81180	10.54874	12.71769	14.43651	15.79863	16.87807	17.73349
6.0%	4.48028	8.20309	11.29658	13.86691	16.00275	17.77749	19.25218	20.47755
7.0%	4.60548	8.61628	12.10918	15.15106	17.80015	20.10718	22.11631	23.86601
8.0%	4.73379	9.05261	12.99283	16.58763	19.86731	22.85948	25.58935	28.07991
9.0%	4.86528	9.51339	13.95403	18.19647	22.24953	26.12169	29.82101	33.35521
10.0%	5.00000	10.00000	15.00000	20.00000	25.00000	30.00000	35.00000	40.00000
11.0%	5.13803	10.51389	16.13859	22.02565	28.18112	34.62561	41.36431	48.41703
12.0%	5.27943	11.05658	17.37837	24.29616	31.86612	40.14975	49.21432	59.13345
13.0%	5.42427	11.62968	18.72872	26.85006	36.14094	46.76978	58.92924	72.83976
14.0%	5.57263	12.23489	20.19982	29.72214	41.10637	54.71658	70.98799	90.44098

MAR = 12.0%

ESCALATION	LIFE 5	10	15	20	25	30	35	40
0.0%	3.60478	5.65022	6.81066	7.46944	7.84314	8.05518	8.17550	8.24378
1.0%	3.70605	5.91622	7.23431	8.02058	8.48917	8.76874	8.93547	9.03490
2.0%	3.80985	6.19667	7.69197	8.62876	9.21364	9.58331	9.81365	9.95796
3.0%	3.91625	6.49237	8.18696	9.30186	10.03491	10.51725	10.83453	11.04326
4.0%	4.02530	6.80421	8.72267	10.04709	10.96143	11.59265	12.02842	12.32926
5.0%	4.13705	7.13309	9.30251	10.87412	12.01205	12.83614	13.43294	13.86514
6.0%	4.25157	7.47998	9.93145	11.79297	13.20650	14.27986	15.09491	15.71382
7.0%	4.36891	7.84588	10.61301	12.81523	14.56785	15.96266	17.07272	17.95615
8.0%	4.48912	8.23187	11.35233	13.95397	16.12305	17.93149	19.43926	20.69634
9.0%	4.61228	8.63906	12.15467	15.22399	17.90368	20.24321	22.28574	24.06899
10.0%	4.73844	9.06864	13.02578	16.64200	19.94667	22.96663	25.72642	28.24844
11.0%	4.86766	9.52185	13.97195	18.22589	22.29525	26.18529	29.90456	33.46082
12.0%	5.00000	10.00000	15.00000	20.00000	25.00000	30.00000	35.00000	40.00000
13.0%	5.13553	10.50446	16.11740	21.98542	28.12013	34.53364	41.23863	48.24835
14.0%	5.27432	11.03668	17.33225	24.21036	31.72491	39.93480	48.90436	58.70390

MAR = 14.0%

ESCALATION	LIFE 5	10	15	20	25	30	35	40
0.0%	3.43308	5.21612	6.14217	6.62313	6.87293	7.00266	7.07005	7.10504
1.0%	3.52831	5.45427	6.50558	7.07945	7.39271	7.56370	7.65704	7.70799
2.0%	3.62589	5.70506	6.89731	7.58098	7.97301	8.19781	8.32672	8.40064
3.0%	3.72588	5.96920	7.31988	8.13311	8.62275	8.91755	9.09505	9.20193
4.0%	3.82833	6.24742	7.77602	8.74193	9.35228	9.73795	9.98166	10.13565
5.0%	3.93329	6.54052	8.26874	9.41432	10.17367	10.67702	11.01067	11.23183
6.0%	4.04082	6.84932	8.80132	10.15802	11.10098	11.75636	12.21187	12.52847
7.0%	4.15097	7.17470	9.37732	10.98179	12.15056	13.00194	13.62212	14.07388
8.0%	4.26379	7.51758	10.00062	11.89549	13.34151	14.44500	15.28710	15.92972
9.0%	4.37934	7.87892	10.67548	12.91025	14.69609	16.12317	17.26357	18.17488
10.0%	4.49767	8.25974	11.40651	14.03363	16.24026	18.08180	19.62217	20.91060
11.0%	4.61884	8.66110	12.19875	15.29478	18.00432	20.37562	22.45090	24.26711
12.0%	4.74292	9.08413	13.05767	16.69467	20.02363	23.07065	25.85960	28.41234
13.0%	4.86995	9.53002	13.98926	18.25631	22.33947	26.24666	29.98546	33.56313

TABLE 7-9
10.00% PER PERIOD COMPOUND INTEREST FACTORS

	SINGLE PAYMENT		UNIFORM SERIES PAYMENTS				GRADIENT SERIES PAYMENTS		
PERIODS	PRESENT WORTH FACTOR (P/F)	FUTURE WORTH FACTOR (F/P)	SINKING FUND FACTOR (A/F)	FUTURE WORTH FACTOR (F/A)	CAPITAL RECOVERY FACTOR (A/P)	PRESENT WORTH FACTOR (P/A)	PRESENT WORTH FACTOR (P/G)	FUTURE WORTH FACTOR (F/G)	UNIFORM SERIES FACTOR (A/G)
1	0.909091	1.100000	1.000000	1.000000	1.100000	0.909091	0.000000	0.000000	0.000000
2	0.826446	1.210000	0.476190	2.100000	0.576190	1.735537	0.826446	1.000000	0.476190
3	0.751315	1.331000	0.302115	3.310000	0.402115	2.486852	2.329076	3.100000	0.936556
4	0.683013	1.464100	0.215471	4.641000	0.315471	3.169865	4.378116	6.410000	1.381168
5	0.620921	1.610510	0.163797	6.105100	0.263797	3.790787	6.861802	11.051000	1.810126
6	0.564474	1.771561	0.129607	7.715610	0.229607	4.355261	9.684171	17.156100	2.223557
7	0.513158	1.948717	0.105405	9.487171	0.205405	4.868419	12.763120	24.871710	2.621615
8	0.466507	2.143589	0.087444	11.435888	0.187444	5.334926	16.028672	34.358881	3.004479
9	0.424098	2.357948	0.073641	13.579477	0.173641	5.759024	19.421453	45.794769	3.372351
10	0.385543	2.593742	0.062745	15.937425	0.162745	6.144567	22.891342	59.374246	3.725461
11	0.350494	2.853117	0.053963	18.531167	0.153963	6.495061	26.396281	75.311671	4.064054
12	0.318631	3.138428	0.046763	21.384284	0.146763	6.813692	29.901220	93.842838	4.388402
13	0.289664	3.452271	0.040779	24.522712	0.140779	7.103356	33.377193	115.227121	4.698792
14	0.263331	3.797498	0.035746	27.974983	0.135746	7.366687	36.800499	139.749834	4.995529
15	0.239392	4.177248	0.031474	31.772482	0.131474	7.606080	40.151988	167.724817	5.278933
16	0.217629	4.594973	0.027817	35.949730	0.127817	7.823709	43.416425	199.497299	5.549341
17	0.197845	5.054470	0.024664	40.544703	0.124664	8.021553	46.581939	235.447028	5.807097
18	0.179859	5.559917	0.021930	45.599173	0.121930	8.201412	49.639539	275.991731	6.052560
19	0.163508	6.115909	0.019547	51.159090	0.119547	8.364920	52.582683	321.590904	6.286095
20	0.148644	6.727500	0.017460	57.274999	0.117460	8.513564	55.406912	372.749995	6.508075
21	0.135131	7.400250	0.015624	64.002499	0.115624	8.648694	58.109523	430.024994	6.718878
22	0.122846	8.140275	0.014005	71.402749	0.114005	8.771540	60.689288	494.027494	6.918886
23	0.111678	8.954302	0.012572	79.543024	0.112572	8.883218	63.146208	565.430243	7.108483
24	0.101526	9.849733	0.011300	88.497327	0.111300	8.984744	65.481297	644.973268	7.288054
25	0.092296	10.834706	0.010168	98.347059	0.110168	9.077040	67.696401	733.470594	7.457982
26	0.083905	11.918177	0.009159	109.181765	0.109159	9.160945	69.794037	831.817654	7.618650
27	0.076278	13.109994	0.008258	121.099942	0.108258	9.237223	71.777257	940.999419	7.770437
28	0.069343	14.420994	0.007451	134.209936	0.107451	9.306567	73.649527	1062.099361	7.913716
29	0.063039	15.863093	0.006728	148.630930	0.106728	9.369606	75.414631	1196.309297	8.048858
30	0.057309	17.449402	0.006079	164.494023	0.106079	9.426914	77.076579	1344.940227	8.176226
31	0.052099	19.194342	0.005496	181.943425	0.105496	9.479013	78.639539	1509.434250	8.296174
32	0.047362	21.113777	0.004972	201.137767	0.104972	9.526376	80.107775	1691.377675	8.409051
33	0.043057	23.225154	0.004499	222.251544	0.104499	9.569432	81.485591	1892.515442	8.515196
34	0.039143	25.547670	0.004074	245.476699	0.104074	9.608575	82.777294	2114.766986	8.614940
35	0.035584	28.102437	0.003690	271.024368	0.103690	9.644159	83.987154	2360.243685	8.708603
40	0.022095	45.259256	0.002259	442.592556	0.102259	9.779051	88.952536	4025.925557	9.096234
45	0.013719	72.890484	0.001391	718.904837	0.101391	9.862808	92.454433	6739.048369	9.374048
50	0.008519	117.390853	0.000859	1163.908529	0.100859	9.914814	94.888369	11139.085288	9.570413
55	0.005289	189.059142	0.000532	1880.591425	0.100532	9.947106	96.561922	18255.914247	9.707539

8.0 COMMERCIALIZATION POTENTIAL AND PLANS

A major objective of the CCT program is to bring the demonstrated technologies to commercial readiness. Therefore, it is of vital importance to address the issues of commercial readiness and commercialization plans.

8.1 Market Analysis

In order to assess the commercialization potential of the technology that was demonstrated, it is important to have an analysis indicating the potential market.

The Clean Air Act Amendments (CAAA) of 1990 and the Energy Policy Act of 1992 have had, and will continue to have, an enormous impact on the power generation marketplace and the related market for air pollution control systems. As the focus of power generation shifts from regulation to a competitive market, decisions will be driven by the need to generate power cost-effectively while meeting more stringent federal, state, and local environmental regulations. At the same time, the flexibility provided in the CAAA for achieving SO_2 emission requirements has shifted pollution control system supply from a "command-and-control" to a "least cost" emphasis. Compliance may be achieved by the use of low sulfur fuels, the purchase or transfer of SO_2 emission allowances, and many other alternatives and does not require the installation of pollution control systems as had historically been required. Therefore, whether for new generation or retrofit applications, the use of FGD or scrubber systems in combination with higher sulfur fuels must offer a cost competitive package as compared to low sulfur fuels or there will be virtually no market for such systems. In order for scrubbers to be cost-effective, it is necessary to combine advanced technology, high levels of system performance, and reduced operating costs.

There are many variables and driving forces that shape what the optimum compliance strategy might be for a particular generating unit or utility system. The impact of these variables and the strength of the driving forces vary widely by project and locale, but understanding and assessing their consequences is critical to selecting the best long term compliance option. As previously discussed, the primary driving force in this decision is cost. Whether in response to a requirement to choose the least cost solution for retrofitting generation or air pollution control systems at an existing unit or responding to the aggressive price competition for new units, power producers are basing their compliance decision on what option has the least cost over the life of the generating unit. Options can be defined in terms of a cost per ton of SO_2 removed or emitted, ¢/kWhr impact on the cost of generating power, or ¢/MMBtu impact on the cost of fuel. Another key driving force is the level of risk associated with each compliance strategy. For example, the risk of building and operating an FGD facility compared

with the risk of fuel switching may vary considerably based on the availability and reliability of supply of low sulfur versus high sulfur fuels. The volatility of fuel prices and key component costs such as transportation may vary widely over time and by location. Compliance with other current or future environmental requirements such as air toxics or disposal of solid and liquid by-product streams are also important variables to be considered in choosing a compliance strategy. Each compliance strategy or combination of compliance strategies has the potential of minimizing costs and mitigating risks. So far, FGD and fuel switching have been the overwhelming choices for compliance in Phase I of the CAAA, while gas-fired combined cycle turbines have dominated the market for new power generation. An evaluation of how advanced scrubbing technology can be used in this very complex decision making process to develop a least cost compliance option demonstrates the potential of allowing the marketplace to develop lower cost solutions than the traditional "command and control" technology mandates.

Advanced Scrubber Systems

What needs to be examined? Power producers can first take advantage of advanced technology. Most of the FGD systems currently operating in the United States are first generation systems. The advanced systems, now in their second and third generation, operating in Germany and Japan offer high removal efficiencies of 95% or greater. Improved, lower cost, corrosion and erosion resistant materials such as rubber and flake glass linings, as well as fiberglass reinforced polyester piping can be utilized in lieu of high alloy materials, substantially reducing system construction costs. Larger and more efficient pumps, fans, oxidation systems, and dewatering equipment offer opportunities to reduce both capital and operating costs. System designers are also reconsidering the need for spare and multiple small absorbers in favor of large absorbers without sparing requirements. Improved process chemistry and control systems eliminate the need for expensive redundancy, which was previously required to maintain high system availability. Many of the FGD systems now being constructed for compliance with Phase I of the CAAA have incorporated these advances in technology.

As a result of these improvements, system costs, including escalation, have actually dropped 25 to 30% over the past decade. In addition to reductions in capital and operating costs, the ability to increase removal efficiency has also improved. This is very important in achieving least cost objectives since the additional capital investment and operating costs required to achieve SO_2 removal of 95% versus 90% refer to a very low incremental cost of generating additional emission allowances and thereby lower the average dollars per ton cost of generating SO_2 emission allowances.

SO_2 Emission Allowances

Emission allowance trading provisions allow the transfer of emission rights from facility to facility and from utility to utility or to independent power producers. Estimates show that emission allowance trading has the potential of reducing the costs of achieving SO_2 emission reduction requirements by 25% or more. The trading system permits utilities and independent power producers to buy, sell, and bank allowances which the EPA has allocated to individual utility generating units. This new type of trading commodity is a license that grants the bearer the right to emit one ton of SO_2 per year per allowance. As a commodity, emission allowances will become a form of currency. Each ton of SO_2 emitted by a facility will have a value in the sense that if it were not emitted it could have been traded or sold to another facility. It may be more cost-effective, for example, for one generating unit to over comply and credit or sell its excess emission allowances to another facility which, in turn, may find it less costly to buy allowances than to install an expensive control system or switch fuels.

Commercial By-Products

The production and sale of commercial quality by-products produced by certain scrubber systems may be another significant cost and environmental variable. The benefit of producing a commercial by-product is not so much a function of the market value of the by-product as it is the avoidance of disposal costs and problems associated with landfilling a waste. Furthermore, landfill permits can be very difficult to obtain since many states mandate the avoidance of generating wastes wherever feasible. The proximity of the by-product to end use markets, such as wallboard and cement manufacturers in the case of gypsum by-product, and the cost of disposal, strongly affect these economics and can be a major factor in the total cost to build and operate the scrubber system.

PowerChip® Gypsum Advantages

There are many different FGD technologies which produce a forced oxidized gypsum product which is calcium sulfate dihydrate. This finely divided moist product gypsum is very cohesive, tends to stick to most handling or storage surfaces and will bridge over outlets in chutework, bins and hoppers. Transportation of conventional wet FGD gypsum with railcars of the bottom discharge design has not been commercially successful for FGD gypsum at 6-15% free moisture. Until the demonstration of PowerChip® Gypsum, the FGD gypsum customers (wallboard and cement producers) had been required to make significant investments in new equipment to utilize FGD gypsum.

This PowerChip® Gypsum demonstration has illustrated the utility of this new physical form of FGD gypsum which is directly compatible with the currently installed equipment used to handle natural rock gypsums.

In essence, current FGD technology enables continued burning of high sulfur coal, and compliance with environmental regulations, while producing an industrial gypsum product. Adding the PowerChip® process to the FGD technology enhances the entire system by producing an industrial substitute for natural rock gypsum which may be used more easily in the cement and wallboard plants.

Cost Analysis

In developing a least cost strategy utilizing FGD technology, it is critical to assess the potential impact of all cost elements. The use of advanced technology, by-product utilization, and most importantly, crediting the value of emission allowances, are key strategies in driving down compliance costs. For example, an analysis was made of the cost of building and operating an FGD system at a hypothetical 500 MWe generating unit located in the Midwest, burning 4.3% sulfur coal and using advanced FGD technology with an own and operate arrangement, by-product sales and emission allowances, as shown in Figure 8-1. A graph depicting the impact of each element and a relative comparison to fuel switching is shown in Figure 8-2. The cost of building and operating a traditional FGD system would be over 50% higher than the compliance cost, which can be achieved by combining the potential savings of each element.

The cost per ton of SO_2 removed based on achieving 95% SO_2 removal efficiency, selling gypsum by-product at $2/ton, and selling or crediting emission allowances at $300/ton, is calculated at $236/ton SO_2 which is equivalent to a fuel delta of $0.80/MMBtu. By comparison, the cost of using a conventional FGD system removing 90%, making a disposal grade by-product, and without crediting the value of allowances is $373/ton SO_2 or $1.26/MMBtu. The reduction of costs which can be achieved by combining the savings of each of these factors is not only important to optimizing the cost of using FGD technology, but is essential to determining whether or not FGD is the least cost compliance alternative. In order for our hypothetical Midwest generating unit to switch to compliance grade fuels, the plant would likely need to abandon the use of local high sulfur coal which it was designed to burn and import low sulfur coal from the West or Southern Appalachian coal regions. Coal price forecasts indicate that the cost delta for low sulfur compliance coal delivered to a midwestern generating station will run approximately $0.70/MMBtu on a 30 year levelized basis versus the cost of burning local coals in such units. The transportation delta alone accounts for 50% of this differential. In addition, even minor plant retrofits such as precipitator upgrades required to allow the

burning of low-sulfur coals would increase the levelized cost to $0.85/MMBtu. This analysis would indicate that without combining the benefits of advanced technology, by-product utilization and emission allowances, it is likely that fuel switching would be a lower cost compliance strategy.

Looking at the sensitivity of key cost variables such as the value of emission allowances, the sulfur content of the fuel burned, and the impact of landfilling the gypsum by-product shows a substantial change in the cost per ton of SO_2 removed, but demonstrates that combining the cost savings potential of each element is still essential to achieving the least cost compliance strategy. Figure 8-3 shows that the cost drops to approximately $175 per ton of SO_2 removed if excess allowances were valued at $600 per ton versus $300 per ton. Figure 8-4 shows that the cost increases to approximately $425 per ton of SO_2 removed if the sulfur content of the coal were 2% versus 4.5%. Figure 8-5 shows that landfilling by-product at a disposal cost of $8 per ton increases the cost per ton of SO_2 removed to approximately $275.

Least Cost Implications

The implications of these factors are equally important to retrofit and new plant markets, since the cost of achieving SO_2 emission requirements cannot be viewed simply in terms of the cost of installing and operating a mandated control technology. Use of low sulfur fuels, use of control technologies, and the purchase of emission allowances will all be viable, cost-effective compliance alternatives. Along with the cost and performance risk of building, financing, operating, and maintaining an air pollution control system, the cost or value of buying, selling, or transferring emission allowances will become a critical factor in determining if advanced scrubbing technology and producing and selling commercial by-products is a least cost compliance alternative. The ability of suppliers to provide more than just equipment may become a key determinant in the ability of the marketplace to capitalize on the potential value of these factors. It is likely that the provisions of the CAAA of 1990 and Energy Policy Act legislation will drive the marketplace for scrubber systems to develop a least cost approach to SO_2 compliance, which will incorporate many of the following factors:

- Reduced capital and operating costs through use of advanced technology.

- Third party financing, ownership, operation, and maintenance alternatives to capitalize on specialization, risk reduction, and economies of scale.

- Production and sale of commercial by-products.

- Creation and credit, lease, or sale of emission allowances from high removal (95% plus) systems.

Least cost for control technologies and all other compliance alternatives will be measured on a total cost basis expressed in terms of $/ton of SO_2, ¢/MMBtu, and/or ¢/kWhr. The ability of power producers, air pollution control system suppliers, and fuel suppliers to work together will be critical in developing these least cost compliance options. In the case of high sulfur fuel, the ability to cost-effectively package the fuel with emission allowances or cleaning services to compete with low sulfur fuels may become an essential sales strategy to market these fuels.

8.1.1 Applicability of the Technology

The AFGD technology has commercial viability in a wide range of coal and non-coal applications. A properly designed unit can handle low sulfur applications as well as high sulfur ones. The application of the technology is not driven by the size of the unit; however it is controlled by the cost of construction. Because of the lower capital cost for duct scrubbers, it will be difficult to compete with other technologies in units of less than 75 MW. The predominant near-term market for this technology will be the retrofit market for those utility power stations affected by the acid rain provisions of the CAAA of 1990. Those stations burning medium to high sulfur coals that choose to install scrubbers will be the primary target for commercialization of this technology. Siting of an FGD unit is driven by the cost of transportation for the by-product gypsum. If a local market is not available it would be cost prohibitive to transport the material to remote sites, and therefore the material must be landfilled. This could be critical when deciding whether to install a scrubber or fuel switch in a certain region.

There is no particular limitation on the type of boiler that can be scrubbed, and proposals have been made for a variety of boiler types.

8.1.2 Market Size

According to the National Energy Strategy, coal use for electric generation will almost triple from its current usage of about 750 million tons per year to a projected level of 2,225 million tons per year by the year 2030. At the same time, electric generation based on oil, gas and nuclear energy will decrease significantly. Consequently, Pure Air anticipates the total new capacity of coal-fired power generation units will be approximately 560,000 MWe in the years 2000 - 2030. Of that, we anticipate that approximately half will be large power plants (greater than 100 MWe)

where wet limestone scrubbing will be considered an economic means of sulfur emissions control. With an expected market penetration of 25%, we anticipate achieving a total market share of approximately 140,000 MWe in the years 2000 - 2030.

8.1.3 Market Barriers

The implementation of scrubber technology has been slowed by the decision of many power companies to fuel switch for the near term. The development of improved mining techniques and the use of new 200 unit trains have kept the price down on western compliance coal. As a result, power companies have elected to fuel switch. While this may not be the best long term solution, it is a short term convenience. Not all boilers lend themselves to burning low sulfur coal, due to its low Btu value and dusting characteristics. As the price of western compliance coals rises, the decision point to use the scrubbing option will be reached.

Due to the size of the investment required for a wet limestone scrubbing system, the technology will likely be economically limited to applications of greater than 100 MWe on an individual basis. Below this 100 MWe minimum size threshold, it is likely that other FGD technologies that require considerably smaller capital investments will be more economic for those applications. Beyond this minimum size threshold, no other size restrictions are expected. In fact, considerable economies of scale can be had by application of the proposed technologies on a large scale, i.e., greater than 500 MWe per single unit.

8.1.4 Economic Comparison with Competing Technologies

<u>Competing Technologies</u>

The AFGD technology will be competing with other wet limestone FGD processes. The majority of these processes are open tower counter-current processes or packed counter-current processes. On a secondary basis, the AFGD system (and limestone systems in general) will compete with systems utilizing lime as the reagent and also with dry scrubbing technologies. The advantages of the AFGD technology over these competing technologies are outlined below.

<u>Other Wet Limestone Processes</u>

The standard co-current process has been shown to be extremely competitive in comparison with counter-current scrubbers. The advantages of the AFGD system over typical counter-current scrubbers include lower pressure drop and the flexibility to increase gas flow beyond a typical

design gas flow rate without either dramatic carryover problems or a quick drop in removal efficiency.

Wet Lime FGD Systems

The ability of wet limestone processes to favorably compete with wet lime systems is well known in the industry. Typically it is the higher operating cost associated with lime systems that enables limestone systems to be selected. The operating cost advantages of the AFGD system will help to heighten this favorable differential in favor of the wet scrubber limestone system. It is true that wet lime systems typically can out perform standard wet limestone systems with respect to sulfur dioxide removal efficiency. The fact that the AFGD system will be able to achieve over 95% SO_2 removal efficiency will be a key factor in competing favorably against wet lime systems.

Dry FGD Systems

In the past, dry FGD systems have been characterized by low-capital, high operating cost versus high-capital, low operating cost for the wet FGD system. Given that the retrofit capital cost of a wet limestone system (vis-a-vis AFGD system) has been reduced, the ability of AFGD system to compete against dry FGD systems will be enhanced. Also, historically wet limestone systems have been able to achieve significantly higher removal efficiencies than dry systems. The ability of dry FGD systems to dramatically improve their removal efficiencies has been documented recently. However, the ability of AFGD system to achieve over 95% removal will greatly differentiate an AFGD system from dry scrubbers. Also, the fact that dry scrubbers produce wastes versus the salable by-products from limestone systems remains an advantage for AFGD system.

In conclusion, it is anticipated that dry FGD systems will continue to capture the market for smaller facilities. However, the high performance and improved cost competitiveness of the AFGD process coupled with the ability to generate high quality salable gypsum, should create a significant competitive advantage in comparison with dry FGD system for capacities above 100 MWe.

Comparison of PowerChip® Gypsum to Briquetted Gypsum

There are two uniquely different and distinguishable technologies for agglomeration of FGD gypsum. One technology makes briquettes and was patented by Mr. Rolf Huller et al. assigned to Knauf Westdeutsche Gipswerk of Germany, U.S. Patent #4,173,610 dated November 6, 1979.

The new PowerChip® technology was patented by Messrs. Roth and Welliver, assigned to Air Products and Chemicals, Inc. (the owner of Pure Air), U.S. Patent #5,362,471 dated November 8, 1994.

Both process technologies greatly enhance the handling and transportation properties of FGD gypsum. The PowerChip® system does not involve a predrying or precalcining step, uses less costly equipment, less energy and in commercial sized plants the cost per ton of final product is 30% to 55% lower for PowerChips® compared to briquetted gypsum.

Final total evaluated costs for this technology are dependent upon site specific factors such as power costs, storage systems, load-out arrangements into trucks, rail or barge, and availability of land adjacent to the unit. To encourage beneficial reuse of industrial gypsum, it must be recognized that the physical form may be a valuable feature to industrial users and the transportation of industrial gypsum to the customer may be a significant factor in the overall economics of its use. Therefore, Pure Air as an alternate choice, demonstrated a more free flowing form of industrial gypsum -- PowerChip® Gypsum.

The estimated range of total costs to produce PowerChip® Gypsum is $2.50-$4.10 per ton of final product. This includes capital cost recovery, operating costs, maintenance costs and all utilities necessary.

8.2 Commercialization Plans

The commercialization of the AFGD system has continued along the lines of pursuing Clean Coal Technology driven projects in the area of retrofits. The development of the market has been slowed by fuel switching.

Recently, a market has appeared that promises to provide a considerable commercial opportunity. This market is driven by a source of low cost fuel. The combustion of coal for power is found primarily in the Midwest, where the coal fields are located, and fuel oil combustion for power is found largely on the East Coast. A relatively new fuel has become available from Venezuela called "Orimulsion." This material is an emulsified bitumen material that behaves very much like heavy fuel oil. A power station firing this material could save a considerable amount of money for its rate payers. "Orimulsion" contains the equivalent sulfur content of 3.2%S coal, and as a consequence SO_2 abatement equipment is required for the fuel conversion. Pure Air sees an opportunity to capture a large share of this market.

FIGURE 8-1
500 MW FGD Economics (Capital + O&M)
Allowance Value + $300/Ton

(1990$)

	30 Year Levelized Costs		
	Annual Costs ($MM)	$/Ton SO2	$/mmBtu
Conventional FGD* (EPRI Cost Model)	37.6	373	1.26
Advanced FGD, Own & Operate	33.3	329	1.12
Advanced FGD, Own & Operate, Byproduct Sale	29.8	295	1.00
Advanced FGD, Own & Operate, Byproduct Sale, Emission Allowance Sale (90% SO2 Removal)	26.4	261	.88
Advanced FGD Own & Operate, Byproduct Sale, Emission Allowance Sale (95% SO2 Removal)	23.9	236	.80

* Derived using EPRI's "Retrofit FGD Cost Estimating Guidelines", March 1990

FIGURE 8-2
Flue Gas Desulfurization Economics
500 MW Plant - 30 Year Levelized Costs
Allowance Value = $300/Ton

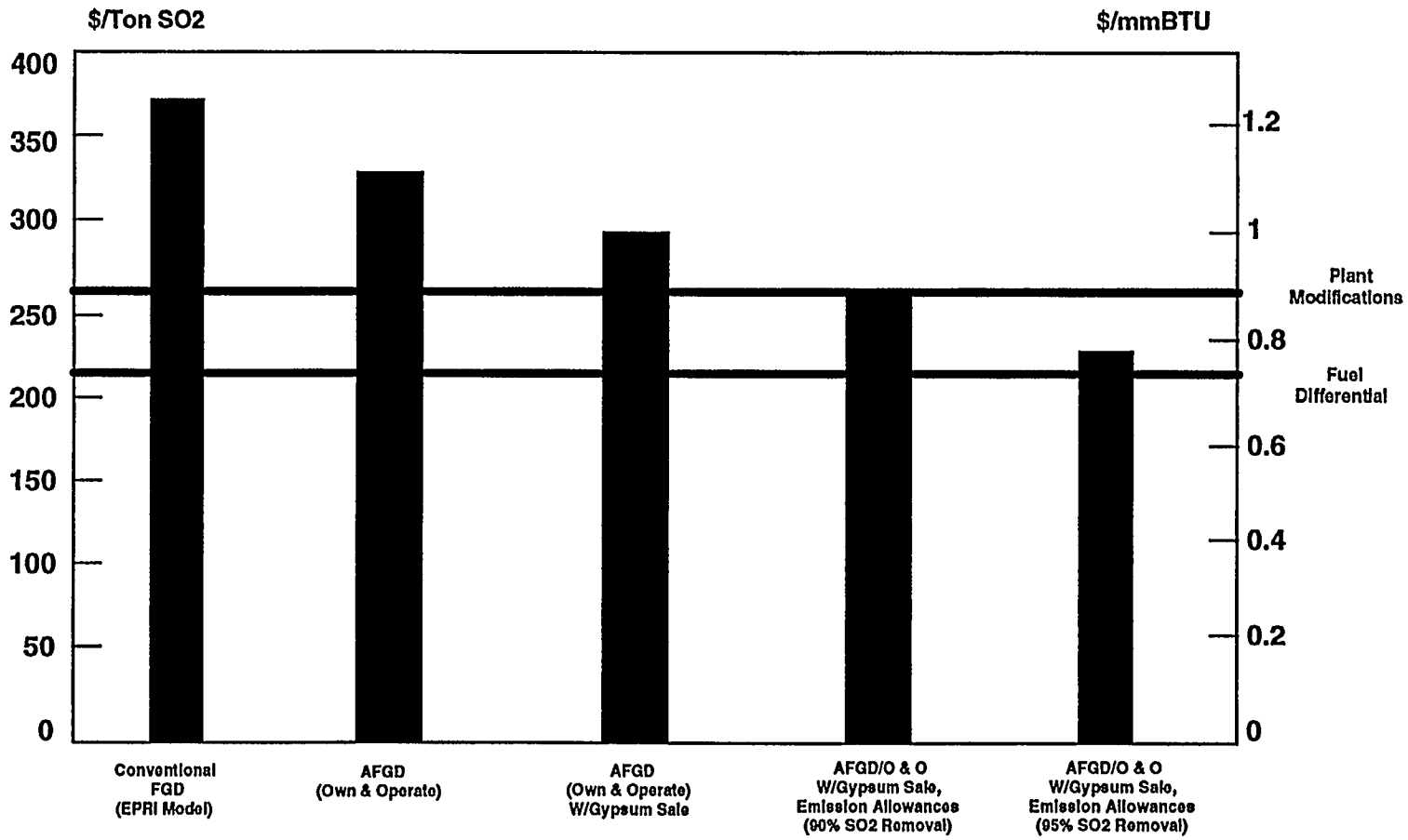

FIGURE 8-3
Flue Gas Desulfurization Economics
500 MW Plant 30 Year Levelized Costs
Allowance Value = $600/Ton

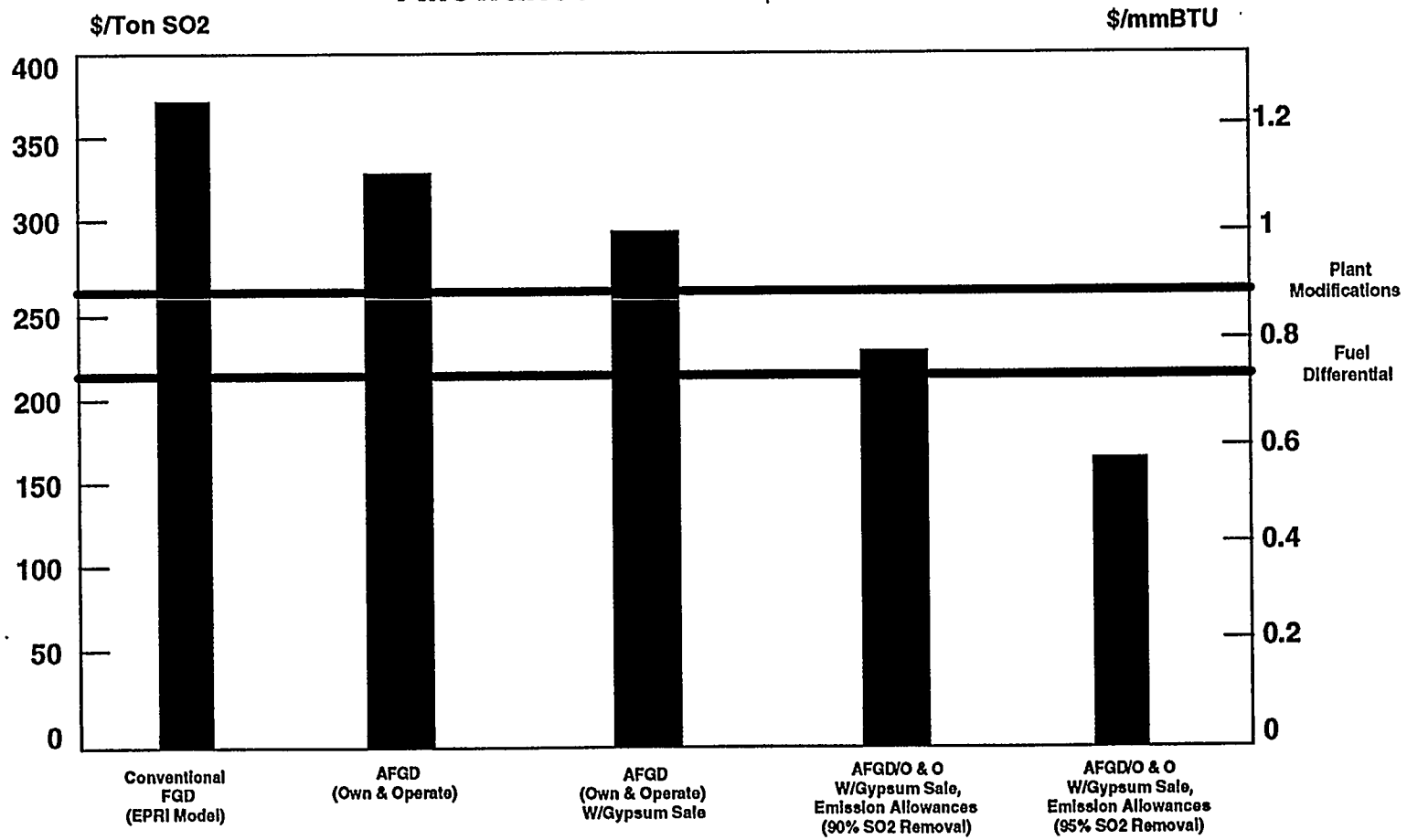

FIGURE 8-4
Flue Gas Desulfurization Economics
500MW Plant - 30 Year Levelized Costs
2% Sulfur Fuel

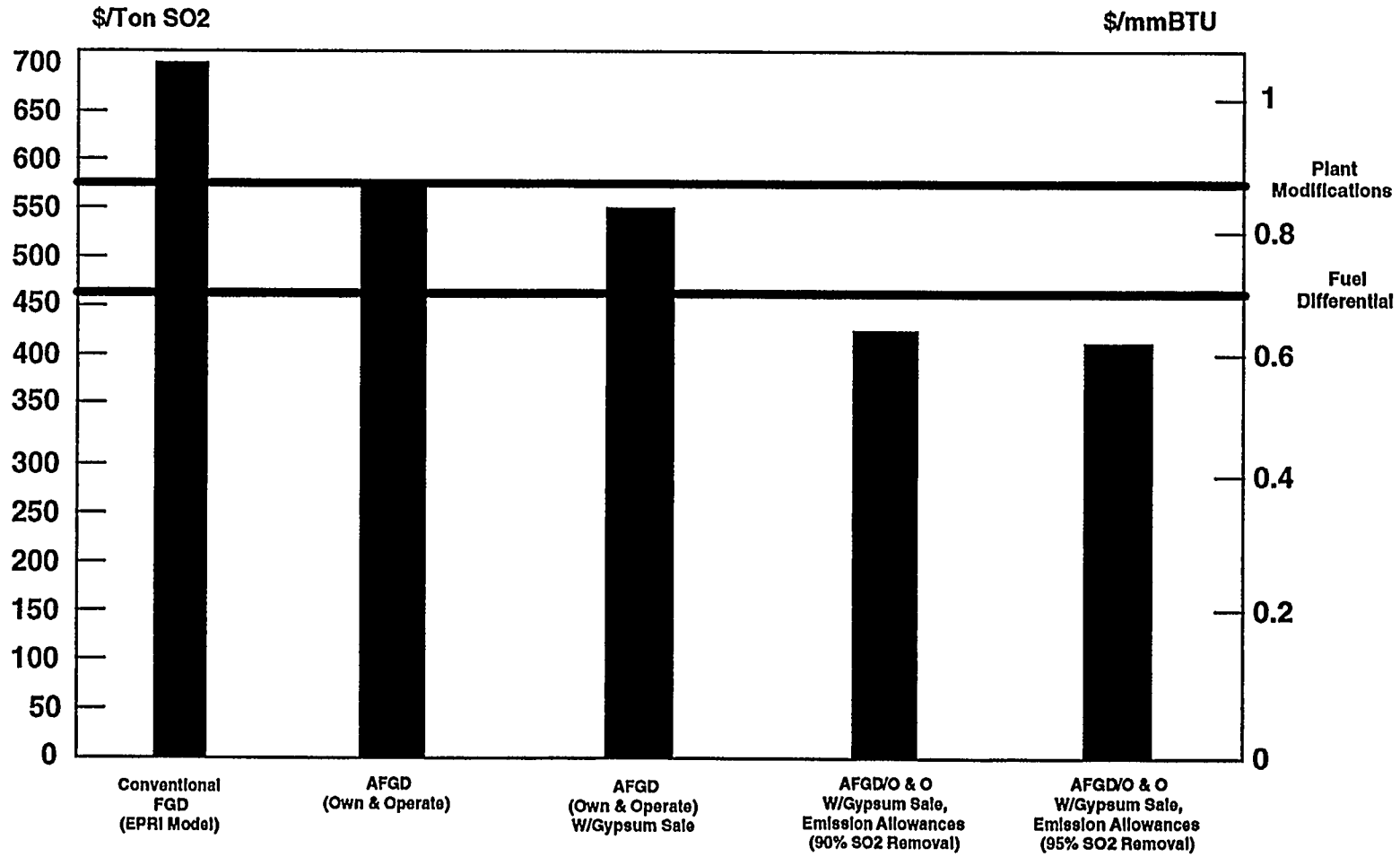

FIGURE 8-5
Flue Gas Desulfurization Economics
500 MW Plant - 30 Year Levelized Costs
Gypsum Disposal = $8/Ton

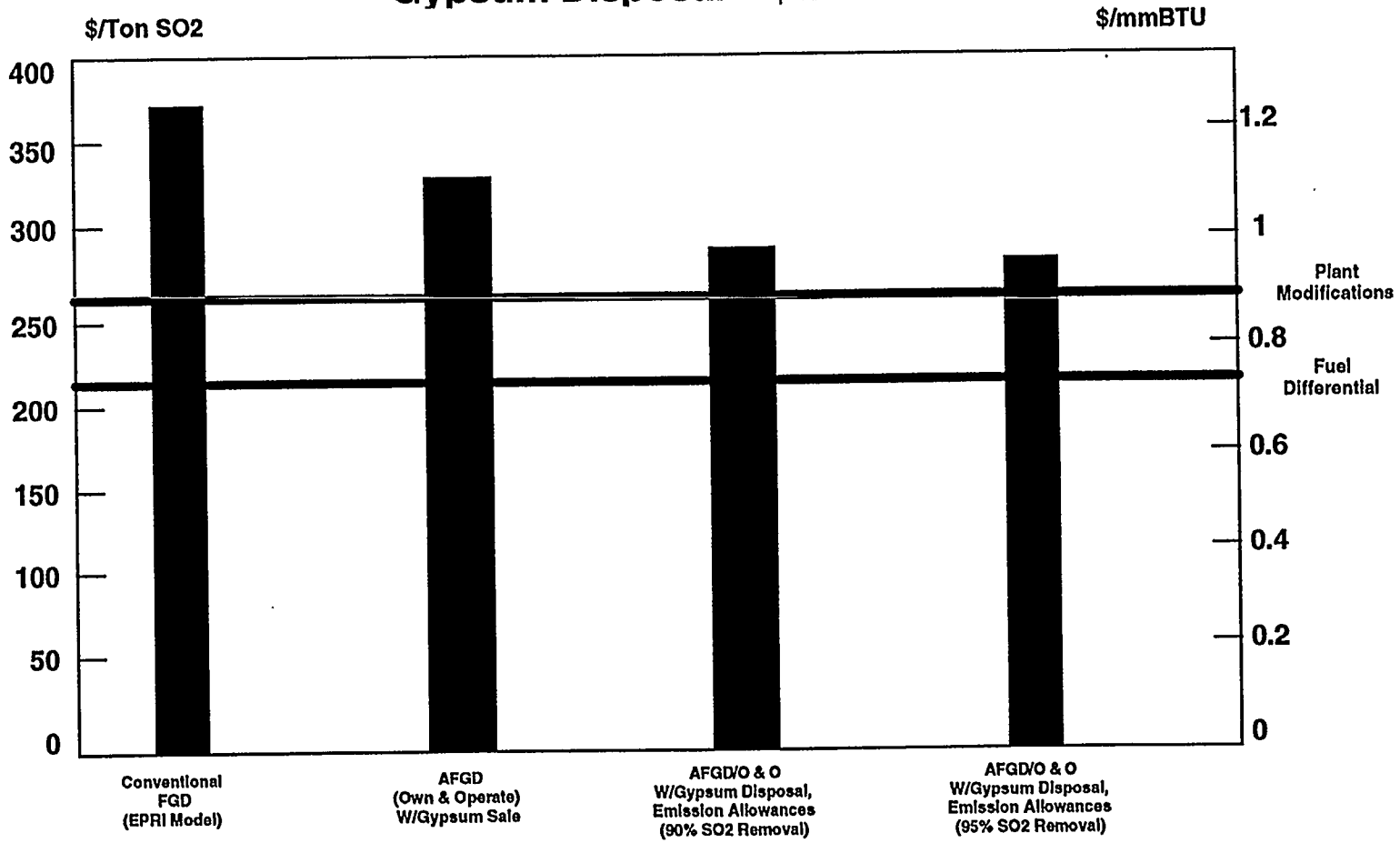

9.0 CONCLUSIONS AND RECOMMENDATIONS

9.1 Conclusions

The AFGD Demonstration Project was a total success.

The purpose of this project was to demonstrate a significant reduction in SO_2 emissions coupled with reduced space requirements. The demonstration incorporated three key elements:

1. AFGD technology;
2. highly efficient, sophisticated plant operation and maintenance capabilities; and
3. by-product gypsum sales.

The key features successfully demonstrated are as follows:

- Single 600 MWe module design that reduces costs. Use of a single 100% capacity absorber module eliminates the need for spare modules due to the high reliability of the module design.

- Co-current, single loop absorber design with in-situ oxidation, which produces high quality gypsum while operating with a wide range of high sulfur coals. Oxidation is accomplished by an innovative air rotary sparger system.

- A contractual arrangement whereby the FGD supplier owns and operates the plant for 20 years or more, with ongoing performance guarantees that reduce operating risk and cost to utilities and their customers.

- Sale of commercial grade gypsum to a wallboard manufacturer.

- Direct injection of powdered limestone.

- High SO_2 removal efficiency, greater than 95%.

- Use of a wastewater evaporation system (WES), which reduces wastewater disposal problems inherent in many U.S. power plants.

- Multiple boilers feeding flue gas to a single absorber module, which significantly reduces costs at power plants with multiple boiler units.

- Demonstration of feasibility to produce an agglomerated physical form of gypsum that could be handled and transported with the same means as natural rock gypsum.

The real proof of the success of this project is its effect on the market place. All of the features that were considered innovative when proposed in 1988 are now incorporated as standard specification for scrubbers built today.

9.2 Recommendations

The next step in the evolution of the wet limestone scrubber is the use of dibasic acids. In the past dibasic acids have been used in older conventional scrubbers as a way of increasing the SO_2 removal rate. These facilities were normally ones that were having difficulty reaching their design removal objective. In addition, because these were older scrubbers they were all generating a waste sludge and not a usable by-product for the wallboard or the cement industry.

Pure Air is currently evaluating what effect, if any, dibasic acids will have on by-product gypsum, and what is the capital equipment cost reduction associated with designing an FGD facility that plans from the beginning to utilize dibasic acids versus the ongoing additional operating costs associated with this process.

10.0 BIBLIOGRAPHY OF OTHER PROJECT REPORTS

References

1. "Acid Rain Compliance - Advanced Co-current Wet FGD Design for the Bailly Station," Wrobel, B. and Vymazal, D. C., First Annual Clean Coal Technology Conference, U.S. Department of Energy, November 1992.

2. "Wet Advanced FGD Design for the Bailly Generating Station," Wrobel, B. and Manavizadeh, G. B., PowerGen '92, Orlando, Florida, 1992.

3. "Advanced Flue Gas Desulfurization: An Integrated Approach to Environmental Management," Sarkus, T. A., Evans, E. W., and Pukanic, G. W., International Symposium on Integrated Energy and Environmental Management, New Orleans, March 1993.

4. "Advanced Flue Gas Desulfurization," Vymazal, D. C., Ashline, P. M., Coal-Fired Power Plant Upgrade 1993 Conference, Warsaw, Poland, June 15-17, 1993.

5. "Project Update: Advanced FGD Design for Northern Indiana Public Service Company's Bailly Generating Station," Henderson, J., Vymazal, D. C., Wrobel, B. A., and Sarkus, T. A. Third Annual Clean Coal Technology Conference, U.S. Department of Energy, September 1994.

6. "PowerChip® Gypsum: A New Choice in Material Handling for Industrial Gypsum," Welliver, W. R., Roth, T. J., Brown, J. R., Hudson, M. S., Colijn, H., Fourth International Conference on FGD and Other Synthetic Gypsum, May 17-18, 1995, Toronto, Canada.

7. "PowerChip® Gypsum: A New Physical Form of FGD Gypsum Which Has Improved Handling Properties," Welliver, W. R., Roth, T. J., Colijn, H., International Ash Utilization Symposium, October 23-25, 1995, Lexington, Kentucky.

8. "A New Choice in Material Handling for Industrial Gypsum," Welliver, W. R., Roth, T. J., Brown, J. R., Hudson, M. S., Colijn, H., World Cement Bulk Materials Handling Review, December 1995; Technical Journal Published by Palladium Ltd., Surrey England.

9. "Advanced Flue Gas Desulfurization (AFGD) Demonstration Project: DOE Test Report #1," prepared by Pure Air under Cooperative Agreement No. DE-FC22-90PC89660 for the U.S. Department of Energy/Pittsburgh Energy Technology Center, 13 October 1993.

10. "Advanced Flue Gas Desulfurization (AFGD) Demonstration Project: DOE Test Report #2," prepared by Pure Air under Cooperative Agreement No. DE-FC22-90PC89660 for the U.S. Department of Energy/Pittsburgh Energy Technology Center, 20 October 1994.

11. "Advanced Flue Gas Desulfurization (AFGD) Demonstration Project: DOE Test Report #3," prepared by Pure Air under Cooperative Agreement No. DE-FC22-90PC89660 for the U.S. Department of Energy/Pittsburgh Energy Technology Center, 3 May 1995.

12. "Advanced Flue Gas Desulfurization (AFGD) Demonstration Project: DOE Test Report #4," prepared by Pure Air under Cooperative Agreement No. DE-FC22-90PC89660 for the U.S. Department of Energy/Pittsburgh Energy Technology Center, 30 May 1995.

13. "Advanced Flue Gas Desulfurization (AFGD) Demonstration Project: DOE Test Report #5," prepared by Pure Air under Cooperative Agreement No. DE-FC22-90PC89660 for the U.S. Department of Energy/Pittsburgh Energy Technology Center, 7 June 1995.

14. "Advanced Flue Gas Desulfurization (AFGD) Demonstration Project: DOE Test Report #6," prepared by Pure Air under Cooperative Agreement No. DE-FC22-90PC89660 for the U.S. Department of Energy/Pittsburgh Energy Technology Center, 20 September 1995.

15. "Advanced Flue Gas Desulfurization (AFGD) Demonstration Project: Quarterly Environmental Monitoring Report, July-September 1992," prepared by Pure Air under Cooperative Agreement No. DE-FC22-90PC89660 for the U.S. Department of Energy/Pittsburgh Energy Technology Center.

16. "Advanced Flue Gas Desulfurization (AFGD) Demonstration Project: Quarterly Environmental Monitoring Report, October-December 1992, " prepared by Pure Air under Cooperative Agreement No. DE-FC22-90PC89660 for the U.S. Department of Energy/Pittsburgh Energy Technology Center.

17. "Advanced Flue Gas Desulfurization (AFGD) Demonstration Project: Quarterly Environmental Monitoring Report, January-March 1993,"prepared by Pure Air under Cooperative Agreement No. DE-FC22-90PC89660 for the U.S. Department of Energy/Pittsburgh Energy Technology Center.

18. "Advanced Flue Gas Desulfurization (AFGD) Demonstration Project: Quarterly Environmental Monitoring Report, April-June 1993," prepared by Pure Air under Cooperative Agreement No. DE-FC22-90PC89660 for the U.S. Department of Energy/Pittsburgh Energy Technology Center.

19. "Advanced Flue Gas Desulfurization (AFGD) Demonstration Project: Quarterly Environmental Monitoring Report, July-September 1993," prepared by Pure Air under Cooperative Agreement No. DE-FC22-90PC89660 for the U.S. Department of Energy/Pittsburgh Energy Technology Center.

20. "Advanced Flue Gas Desulfurization (AFGD) Demonstration Project: Quarterly Environmental Monitoring Report, October-December 1993," prepared by Pure Air under Cooperative Agreement No. DE-FC22-90PC89660 for the U.S. Department of Energy/Pittsburgh Energy Technology Center.

21. "Advanced Flue Gas Desulfurization (AFGD) Demonstration Project: Quarterly Environmental Monitoring Report, January-March 1994," prepared by Pure Air under Cooperative Agreement No. DE-FC22-90PC89660 for the U.S. Department of Energy/Pittsburgh Energy Technology Center.

22. "Advanced Flue Gas Desulfurization (AFGD) Demonstration Project: Quarterly Environmental Monitoring Report, April-June 1994," prepared by Pure Air under Cooperative Agreement No. DE-FC22-90PC89660 for the U.S. Department of Energy/Pittsburgh Energy Technology Center.

23. "Advanced Flue Gas Desulfurization (AFGD) Demonstration Project: Quarterly Environmental Monitoring Report, July-September 1994," prepared by Pure Air under Cooperative Agreement No. DE-FC22-90PC89660 for the U.S. Department of Energy/Pittsburgh Energy Technology Center.

24. "Advanced Flue Gas Desulfurization (AFGD) Demonstration Project: Quarterly Environmental Monitoring Report, October-December 1994," prepared by Pure Air under Cooperative Agreement No. DE-FC22-90PC89660 for the U.S. Department of Energy/Pittsburgh Energy Technology Center.

25. "Advanced Flue Gas Desulfurization (AFGD) Demonstration Project: Quarterly Environmental Monitoring Report, January-March 1995," prepared by Pure Air under Cooperative Agreement No. DE-FC22-90PC89660 for the U.S. Department of Energy/Pittsburgh Energy Technology Center.

26. "Advanced Flue Gas Desulfurization (AFGD) Demonstration Project: Quarterly Environmental Monitoring Report, April-June 1995," prepared by Pure Air under Cooperative Agreement No. DE-FC22-90PC89660 for the U.S. Department of Energy/Pittsburgh Energy Technology Center.

27. "Advanced Flue Gas Desulfurization (AFGD) Demonstration Project: Environmental Monitoring Report, Annual 1993," prepared by Pure Air under Cooperative Agreement No. DE-FC22-90PC89660 for the U.S. Department of Energy/Pittsburgh Energy Technology Center.

28. "Advanced Flue Gas Desulfurization (AFGD) Demonstration Project: Environmental Monitoring Report, Annual 1994," prepared by Pure Air under Cooperative Agreement No. DE-FC22-90PC89660 for the U.S. Department of Energy/Pittsburgh Energy Technology Center.

11.0 APPENDICES

Appendix A	Process and Instrumentation Diagrams
Appendix B	Revised Equipment List
Appendix C	Operating Procedures for Demonstration Unit
Appendix D	Pure Air Analytical Testing Program
Appendix E	Data Macro Source Code
Appendix F	Material Balance Spreadsheet
Appendix G	Data Summary for Major Process Variables
Appendix H	Major Equipment Repair History
Appendix I	WES Test Data
Appendix J	References

APPENDIX A
PROCESS AND INSTRUMENTATION DIAGRAMS

STANDARD SYMBOLS AND ABBREVIATIONS

LINES

- PROCESS LINE
- NON PROCESS OR UTILITY LINES
- PNEUMATIC LINE
- ELECTRICAL LINE
- INSTRUMENT CAPILLARY TUBING
- INSULATED LINE
- ELECTRICAL TRACED LINE (TEL)
- INSTRUMENT AIR SUPPLY
- HYDRAULIC SIGNAL LINE
- STEAM TRACED LINE

VALVES

- PLUG VALVE
- DIAPHRAGM VALVE
- KNIFE VALVE
- PINCH VALVE
- GATE VALVE
- GLOBE VALVE
- NEEDLE VALVE
- LOCK-OUT VALVE
- CHECK VALVE
- BUTTERFLY VALVE
- THREE-WAY VALVE
- FOUR-WAY VALVE
- MANIFOLD VALVE
- ANGLE VALVE
- BALL VALVE
- SWITCHING CHECK VALVE
- SLIDE GUILLOTINE VALVE

NOTE: SHADED VALVES ARE NORMALLY CLOSED
UNSHADED VALVES ARE NORMALLY OPEN

INSTRUMENTS

- (A) FURNISHED BY APCI (VENDOR AREA ONLY)
- (C) FURNISHED BY CUSTOMER
- (P) FURNISHED BY VENDOR (VENDOR AREA ONLY)
- (U) FURNISHED BY MHI
- (N) FURNISHED BY NORTHERN INDIANA
- (W) WINTERIZATION/WET SERVICE
- LOCALLY MOUNTED INSTRUMENT
- PANEL MOUNTED INSTRUMENT W/DESIGNATION
- INSTRUMENT MOUNTED ON BACK OF PANEL W/DESIGNATION
- (Y) COMPUTER RELAY (SQUARE ROOT EXTRACTOR)
- (Y) COMPUTER RELAY (MULTIPLIER)

MISCELLANEOUS

- (TP) PA/HI TIE POINT
- ST- IN-LINE STRAINER
- STY- STRAINER
- MATERIAL BALANCE POINT
- REDUCER
- EXP- EXPANSION JOINT OR FLEX CONNECTION
- (T) TRAP
- OPEN FUNNEL DRAIN
- (SS) STAINLESS STEEL SPOOL PIECE
- (CER) CERAMIC SPOOL PIECE
- FH- FLEXIBLE HOSE
- UNION
- SPEC. OR LIMIT BREAK
- FLANGES
- FLOW SIGHT GLASS
- DIFFUSER
- CHEMICAL SEAL
- X/XX LINE SLOPE
- SAMPLE PAN
- FILL CONNECTION
- (Y) COMPUTER RELAY (DIVIDER)
- (Y) COMPUTER RELAY (SET RATIO STATION)
- (Y) LOW SELECTOR RELAY
- (Y) HIGH SELECTOR RELAY
- (FI) ROTAMETER
- TEMPERATURE ELEMENT W/WELL (LOCAL)
- (TI) TEMPERATURE INDICATOR (TI), REMOTE PANEL MONITORING (RECORDING IF TR). THERMOCOUPLE ELEMENT (TE) THERMOWELL. PANEL LOCATION PER MHI-BUBBLE

LINE DESIGNATION

10"-WS-900-BA00

LINE SIZE | FLUID IN LINE | APCI LINE IDENTIFICATION | PIPING SPEC.

INSULATION LEGEND

A	CALCIUM SILICATE
B	FIBERGLASS
BB	FIBERGLASS W/LEAD JACKET
C	FIBERGLASS
D	URETHANE
E	URETHANE
F	CELLULAR GLASS (FOAMGLAS)
G	CALCIUM SILICATE
H	URETHANE
J	CELLULAR GLASS (FOAMGLAS)
K	FIBERGLASS /CALCIUM SILICATE

LINE SYMBOLS

AI	INSTRUMENT AIR
AO	OXIDATION AIR
AP	PLANT AIR
AS	SEAL AIR
DD	DUCT DRAIN
GS	GYPSUM SLURRY
HL	HYDRATED LIME
K	CONDENSATE
LP	LIMESTONE POWDER
LO	LUBE OIL
LS	LIMESTONE SLURRY
LU	LUBRICATING OIL
MPS	MIDDLE PRESSURE STEAM
OS	OVERFLOW SLURRY
SA	SODA ASH
SLP	LOW PRESSURE STEAM
WC	COOLING WATER
WCR	COOLING WATER RETURN
WE	EMERGENCY WATER
WF	FIRE FIGHTING WATER
WI	INDUSTRIAL WATER
WP	POTABLE WATER
WS	SEAL WATER
WW	WASTE WATER
V	VENT

TRENCH SYMBOLS

- A — TO ABSORBER SUMP (V-700)
- B — TO THICKENER SUMP (V-720)
- C — TO FILTRATE SUMP (V-320)

- (FT) MAG METER
- (FO) FLOW ORIFICE (FIXED RESTRICTION)
- ORIFICE
- ULTRASONIC METER
- VENTURI
- VORTEX METER
- PITOT TUBE
- (A) ANALYZER

SERVICE CLASS AND MATERIAL

AA55	CLASS 150 - CARBON STEEL ISOBUTYLENE ISOPRENE RUBBER LINED
AA60	CLASS 150 - CARBON STEEL ISOBUTYLENE ISOPRENE RUBBER LINED
BA00	CLASS 150 - STAINLESS STEEL
BB00	CLASS 150 - STAINLESS STEEL
CA00	CLASS 150 - CARBON STEEL
CC00	CLASS 150 - CARBON STEEL
CC02	CLASS 150 - CARBON STEEL
CC20	CLASS 150 - CARBON STEEL
FRP	- PLASTIC
PLP	-POLYPROPYLENE LINED PIPE

STD ABBR.

COMP	COMPUTER
COMPR.	COMPRESSOR
(HC)	HYDROCARBON ANALYZER
(N2)	NITROGEN ANALYZER
(O2)	OXYGEN ANALYZER
A.G.	ABOVEGROUND
A/M	AUTO-MANUAL STATION
C.B.	COLD BOX
C.O.	CROSSOVER
F.C.	FAIL CLOSE
F.D.	FIELD
F.H.	FLEX HOSE
F.O.	FAIL OPEN
HPT	HIGH POINT
IAS	INSTRUMENT AIR SUPPLY
I.S.	INSIDE
I/P	CURRENT TO PNEUMATIC TRANSDUCER
K.M.	KRAUSS MAFAI
L.O.	LOCK OPEN
LPT	LOW POINT
M.H.	MANHOLE
NI	NORTHERN INDIANA
N.O.	NORMALLY OPEN VALVE
N.C.	NORMALLY CLOSED VALVE
O.S.	OUTSIDE
PA	PURE AIR
P.T.	PRESSURE TAP
S.P.	SET POINT
T.S.	TO STACK
U.G.	UNDERGROUND
VJ	VACUUM JACKET

- ELECTRO/PNEU POSITIONER
- PNEU POSITIONER
- HAND ACTUATOR

- CRITICAL CONTROL CIRCUIT
- (COMP) --- COMPUTER DATA LOGGER
- (P) PRESS. TAP-PLUGGED

NOTES:

(1) FOR ANY ADDITIONAL INSTRUMENT IDENTIFICATION AND SYMBOLS, REFER TO THE ISA STANDARDS, SECTION S5.1, OR THE FLOWSHEET GROUP

(2) NEW INSTRUMENT NO.S SHOULD BE GENERATED FROM THE FLOWSHEET GROUP.

(3) *CV-FOR VALVE WITH INTERGRAL CONTROL
*V-FOR VALVE WITH SEPARATE CONTROLLER
*-IS THE LETTER FOR MEASURED VARIABLE

(4) ALL N2 PURGE CONNECTIONS TO FLAMMABLE GAS LINES SHALL CONFORM TO ENGR DCS. STD. 570 9

INSTRUMENT VALVES

- PRESSURE CONTROL VALVE
- F.C. TWO-WAY CONTROL VALVE (FAIL CLOSE)
- F.O. TWO-WAY CONTROL VALVE (FAIL OPEN)
- (S) SOLENOID CONTROL VALVE (3-WAY)
- PRESSURE RELIEF VALVE
- THERMAL RELIEF VALVE
- PRESSURE RELIEF DISC
- VACUUM RELIEF DISC
- VAC PRESS PRESSURE-VACUUM RELIEF VALVE
- (S) SWITCHING VALVE (4-WAY)
- LOUVER DAMPER VALVE
- (M) ROTARY MOTOR ACTUATOR
- PNEUMATIC DIAPHRAGM ACTUATOR
- (S) SOLENOID ACTUATOR
- DOUBLE ACTING ACTUATOR

- (1) DENOTES SIGNAL WIRED THROUGH INTERFACE PANEL
- SOFTWARE LINKAGE

- INSTRUMENT FUNCTION IN D.C.S ACCESSIBLE FROM OPERATOR CONSOLE
- INSTRUMENT FUNCTION IN D.C.S NOT NORMALLY ACCESSIBLE FROM OPERATOR CONSOLE
- SEQUENTIAL OR INTERLOCK FUNCTION IN D.C.S. ACCESSIBLE FROM OPERATOR CONSOLE

ACTUATORS

- SEQUENTIAL OR INTERLOCK FUNCTION IN D.C.S. NOT NORMALLY ACCESSIBLE FROM OPERATOR CONSOLE

INSTRUMENT IDENTIFICATION INDEX

	FIRST LETTER		SUCCEEDING LETTERS		
	MEASURED VARIABLE	MODIFIER	PASSIVE FUNCTION	OUTPUT FUNCTION	MODIFIER
A	ANALYSIS		ALARM		
B	BURNER				
C	CONDUCTIVITY			CONTROL	
D	DENSITY	DIFFERENTIAL			
E	VOLTAGE		ELEMENT		
F	FLOW	RATIO			
G	GAUGING		GLASS		
H	HAND				HIGH
I	ELECTRICAL		INDICATE		
J	POWER	SCAN			
K	TIME				
L	LEVEL		LIGHT		LOW
M	HUMIDITY				MIDDLE
N	EMERGENCY				
O			ORIFICE		
P	PRESSURE		POINT		
Q	QUANTITY	INTEGRATE			
R	RADIOACTIVITY				
S	SPEED	SAFETY		SWITCH	
T	TEMPERATURE			TRANSMIT	
U	MULTIVARIABLE		MULTIFUNCTION	MULTIFUNCTION	MULTIFUNCTION
V	VISCOSITY			VALVE	
W	WEIGHT		WELL		
X	SOLENOID				
Y	VIBRATION			RELAY	
Z	POSITION			DRIVE	

PANEL LEGEND

- (1) AUX. CONTROL PANEL
- (2A) LOCAL LIMESTONE PANEL STATION #1
- (2B) LOCAL LIMESTONE PANEL STATION #2
- (2C) LOCAL LIMESTONE PANEL STATION #3
- (3) LOCAL HYDRATED LIME PANEL STATION #1
- (4)-(4) LOCAL M-300 CENTRIFUGE PANELS
- (5) SAMPLER PLC PANEL

SIGNATURES

© PURE AIR 1990-93
ALL RIGHTS RESERVED
UNPUBLISHED

APCI
MHI

NO	FCN'S	DATE	MADE	CHK'D	PROC	PUR	OPER	PROJ	SAFETY	ENGR	MAT	MAT	MAT	MAT	MAT
REVISIONS					APPROVED										

NO	FCN'S	DATE	MADE	CHK'D	PROC	PUR	OPER	PROJ	SAFETY	ENGR	MAT	MAT	MAT	MAT	MAT
1	—	7/6/94	MM	GBM	DOE PUBLIC REPORT										
REVISIONS					APPROVED										

TITLE
PROCESS AND INSTRUMENTATION DIAGRAM
BAILLY GENERATING STATION
AFGD PROJECT
LEGEND

Pure Air a joint venture company
Air Products and Chemicals, Inc. Mitsubishi Heavy Industries America, Inc.

DRG NO 00-9-6992-55.10
SHEET A1
MODULE REF. F6992AA1
REV 1

EQUIPMENT LIST

ITEM NO.	DESCRIPTION	SHT. NO
A-120A/C	GEARBOX AND L.O. SUMP	
A-120AX1	LUBE OIL COOLING FAN	
A-120AX2&3	LUBE OIL PUMPS	
A-120A/O	AIR ROTARY SPARGERS	12
A-130A/B	NEUTRALIZATION TANK AGITATORS	2
A-140A/B	OXIDATION TANK AGITATORS	2
A-320	FILTRATE THICKENER RAKE	5
A-330	FILTRATE THICKENER RAKE	8
A-340	FILTRATE OVERFLOW TANK AGITATOR	8
A-370	CENTRIFUGE FEED TANK AGITATOR	5
A-700	ABSORBER SUMP AGITATOR	6
A-710	ABSORBER HOLD TANK AGITATOR	6
A-720	THICKENER SUMP AGITATOR	8
A-730	ABSORBER HOLD TANK SUMP AGITATOR	8
A-810A&B	AGITATORS	10
A-900	EQUALIZATION TANK AGITATORS	15
A-910	NEUTRALIZATION/DESATURATION AGITATOR	15
A-920	COAGULATION TANK AGITATOR	15
A-930A&B	REACTOR MIXERS	16
A-940A&B	DENSADEG RL #1 AND #2 MIXERS	16
B-110A-D	PROCESS AIR COMPRESSORS	12
B-111A-D	COMPRESSOR MOTORS	12
B-112A-D	INLET AIR FILTERS	12
B-113A-D	INLET AIR FILTER SILENCERS	12
B-114A-D	LUBE OIL RESERVOIRS	
B-115A-D	AUX. LUBE OIL PUMPS	
B-116A-D	MAIN LUBE OIL PUMPS	
B-117A-D	SILENCERS	12
B-118A-D	SPACE HEATERS	
B-119A-D	LUBE OIL FILTERS	
B-120A-D	LUBE OIL COOLERS	
B-510A&B	LIMESTONE TRANSFER COMPRESSORS	9
B-520A,B,C	LIMESTONE UNLOADING BLOWERS	9
B-512A,B,C	LIMESTONE UNLOADING BLOWER SILENCERS	9
B-810A,B,C	AERATION-AIRSLIDE RECIRCULATION BLOWERS	9
C-1	1ST STAGE COMPRESSOR	14
C-2	2ND STAGE COMPRESSOR	14
C-150A-1&2	PREFILTERS	13
C-150B-1&2	PREFILTERS	13
C-310A&B	GYPSUM CONVEYORS	5
C-311	GYPSUM TRANSFER CONVEYOR	5
C-312	TRANSFER BELT	
C-313	SHUTTLE BELT	
CV-1	CAPACITY CONTROL VALVE	14
DS-1&2	DRAIN SEPARATORS	14
E-120	MIST ELIMINATOR	14
EH-120A	ELECTRIC HEATER	
F-1	SUCTION FILTER	14
F-2	OIL FILTER	14
F-3	CONTROL AIR FILTER	14
GP	OIL PUMP	14
H-1	INTERCOOLER	14
H-2	AFTERCOOLER	14
H-610A&B	GLYCOL COOLERS	11
M-1	MAIN MOTOR	14
M-2	OIL PUMP MOTOR	14
M-20A&B	SILO VENT FANS	9
M-300A-1	GYPSUM CENTRIFUGES	5
M-310	SWEEP SAMPLER	5
M-311	ROTARY SAMPLE COLLECTOR	5
M-360	OIL SKIMMER	
M-500A&B	LIMESTONE FEEDERS	9
M-530A&B	SCREW PUMPS	9
M-540	SILO BIN VENT	9
M-600A & B	DRIER ASSEMBLIES	13
M-800	HYDRATED LIME FEEDER	10
M-801	BIN VIBRATOR	10
M-811	FILTER/RECEIVER	10
M-812	MANUAL TWO-WAY DIVERTER VALVE	10

EQUIPMENT LIST

ITEM NO.	DESCRIPTION	SHT. NO
M-840	SILO BIN VENT FAN	10
M-900	FILTER PRESS	17
P-125A&B	ABSORBER BLEED PUMPS	2
P-150A-1&2	AFTERFILTERS	13
P-150B-1&2	AFTERFILTERS	13
P-320A&B	FILTRATE PUMPS	5
P-330A&B	THICKENER UNDERFLOW PUMPS	8
P-340A&B	THICKENER OVERFLOW PUMPS	8
P-350	WASTEWATER PUMP	8,11
P-350A	WASTEWATER (LOW HEAD) PUMP	8
P-360	GYPSUM BUILDING SUMP	
P-370A&B	CENTRIFUGE FEED PUMPS	5,11
P-600	MAIN DIESEL QUENCH PUMP	19
P-608	RECIRCULATION PUMP	19
P-610A & B	GLYCOL PUMPS	11
P-630	CONVEYOR TUNNEL SUMP PUMP	8
P-631A&B	FLOOR DRAIN SUMP PUMPS	11
P-700A&B	ABSORBER SUMP PUMPS	6
P-710	ABSORBER HOLD TANK PUMP	6,11
P-720	THICKENER SUMP PUMP	6
P-730	ABSORBER HOLD TANK SUMP PUMP	8
P-811A&B	NEUTRALIZATION PUMPS	10,11
P-900A&B	FORWARD FEED PUMPS	15
P-940A/C	50% SLUDGE RECYCLE PUMPS	16
P-945A/C	50% SLUDGE WASTE PUMPS	16
P-960A/B	PRESS FEED PUMPS	17
P-980A&B	DOSING PUMPS	18
P-985A&B	DOSING PUMPS	18
P-995A&B	DOSING PUMPS	18
S-1,2,3&4	SILENCERS	14
T-120	ABSORBER TANK	2
V-1	OIL TANK	14
V-320	FILTRATE SUMP	5
V-330	FILTRATE THICKENER	8
V-331	LIFT STATION	11
V-360	GYPSUM BUILDING PUMP	
V-370	CENTRIFUGE FEED TANK	5
V-500A&B	LIMESTONE SILOS	9
V-600	INSTRUMENT AIR SURGE VESSEL	13
V-610	GYLCOL TANK	11
V-630	CONVEYOR TUNNEL SUMP	8
V-710	ABSORBER HOLD TANK	6
V-720	THICKENER SUMP	6
V-730	ABSORBER HOLD TANK SUMP	8
V-800	HYDRATED LIME SILO	10
V-810A&B	HYDRATED LIME INJECTION TANKS	9A
V-900	EQUALIZATION TANK	15
V-910	NEUTRALIZATION/DESATURATION TANK	15
V-920	COAGULATION TANK	15
V-930A&B	REACTORS	16
V-940A&B	DENSADEG RL #1 AND #2 THICKENERS/CLARIFIERS	16
V-950	CLEARWELL	15
V-960	SLUDGEHOLDING TANK	17
V-970	FILTRATE DRAIN SUMP	17
V-980	SULFURIC ACID STORAGE TANK	18
V-990	BULK STORAGE TANK	18
V-995	ABSORBER HOLD TANK SUMP	18
V-XXXX	STATION AIR RECIEVER	19
01.10A	1ST STAGE COMPRESSOR	7
01.10B	1ST STAGE INTERCOOLER	7
01.10C	2ND STAGE COMPRESSOR	7
01.10D	2ND STAGE INTERCOOLER	7
01.10E	3RD STAGE COMPRESSOR	7
01.10H	AUX. LUBE OIL PUMP	
01.10J	LUBE OIL FILTER	
01.10K	MAIN LUBE OIL PUMP	
01.10L	LUBE OIL HEATER	
01.10M	LUBE OIL COOLER	
01.11	COMPRESSOR MOTOR	
01.12	AIR FILTER	
01.13	AFTERCOOLER	
01.14	SEPARATOR	

INDEX

SHT. NO.	TITLE	STATUS REV.	STATUS DATE
A1	LEGEND	1	7FEB94
A2	INDEX, EQUIPMENT AND SHUTDOWN LIST	1	7FEB94
1	FLUE GAS CONTROL	1	7FEB94
2	ABSORBER SYSTEM / ABSORBER BLEED PUMPS	1	7FEB94
3	ABSORBER RECIRCULATION PUMPS / ANALYZER	1	7FEB94
4	ABSORBER MIST ELIMINATOR	1	7FEB94
5	GYPSUM CENTRIFUGE / FEED TANK / DEWATERING SYSTEM	1	7FEB94
6	ABSORBER HOLD TANK SUMP & HOLD TANK / ABSORBER SUMP PUMP / THICKENER SUMP	1	7FEB94
7	WASTE WATER TREATMENT & EVAPORATION SYSTEM / WES AIR COMPRESSOR	1	7FEB94
8	WASTE WATER TREATMENT & EVAPORATION SYSTEM	1	7FEB94
9	LIMESTONE FEED SYSTEM	1	7FEB94
10	HYDRATED LIME ADDITION / LIME INJECTION SYSTEM	1	7FEB94
11	UTILITY WATER SYSTEM / PROCESS & POTABLE WATER	1	7FEB94
12	PROCESS AIR COMPRESSORS / AIR SPARGER SYSTEM	1	7FEB94
13	INSTR. AIR DISTRIBUTION SYSTEM / DRIER ASSEMBLY	1	7FEB94
14	INSTRUMENT AIR COMPRESSOR	1	7FEB94
15	WASTE WATER TREATMENT / CLEARWELL / TREATED WATER PUMPS	1	7FEB94
16	WASTEWATER TREATMENT / SLUDGE RECYCLE / WASTE PUMPS	1	7FEB94
17	SLUDGE TREATMENT SYSTEM	1	7FEB94
18	SERVICE/FIRE,FILTERD & POT. WATER SYSTEM / STORAGE & DOSING SYSTEM	1	7FEB94
19	AIR SUPPLY / QUENCH & FIREWATER SYSTEM	1	7FEB94

SIGNATURES

© PURE AIR 1990-93
ALL RIGHTS RESERVED
UNPUBLISHED

APCI _____
SAG _____

NO	DATE	MADE	CHK'D	PROC	ELEC	OPER	PROJ	SAFETY	CONS. COOR.	MECH. ELE.	DOCS. ADM.	ADV. & ELE.
1	7FEB94	MM	GBM	DOE PUBLIC REPORT								

REVISIONS — APPROVED

TITLE
PROCESS AND INSTRUMENTATION DIAGRAM
BAILLY GENERATING STATION
AFGD PROJECT
INDEX, EQUIPMENT AND SHUTDOWN LIST

Pure Air

DRG NO. 00-9-6992-55.10 SHEET A2
MODULE REF. F6992AA2 REV 1

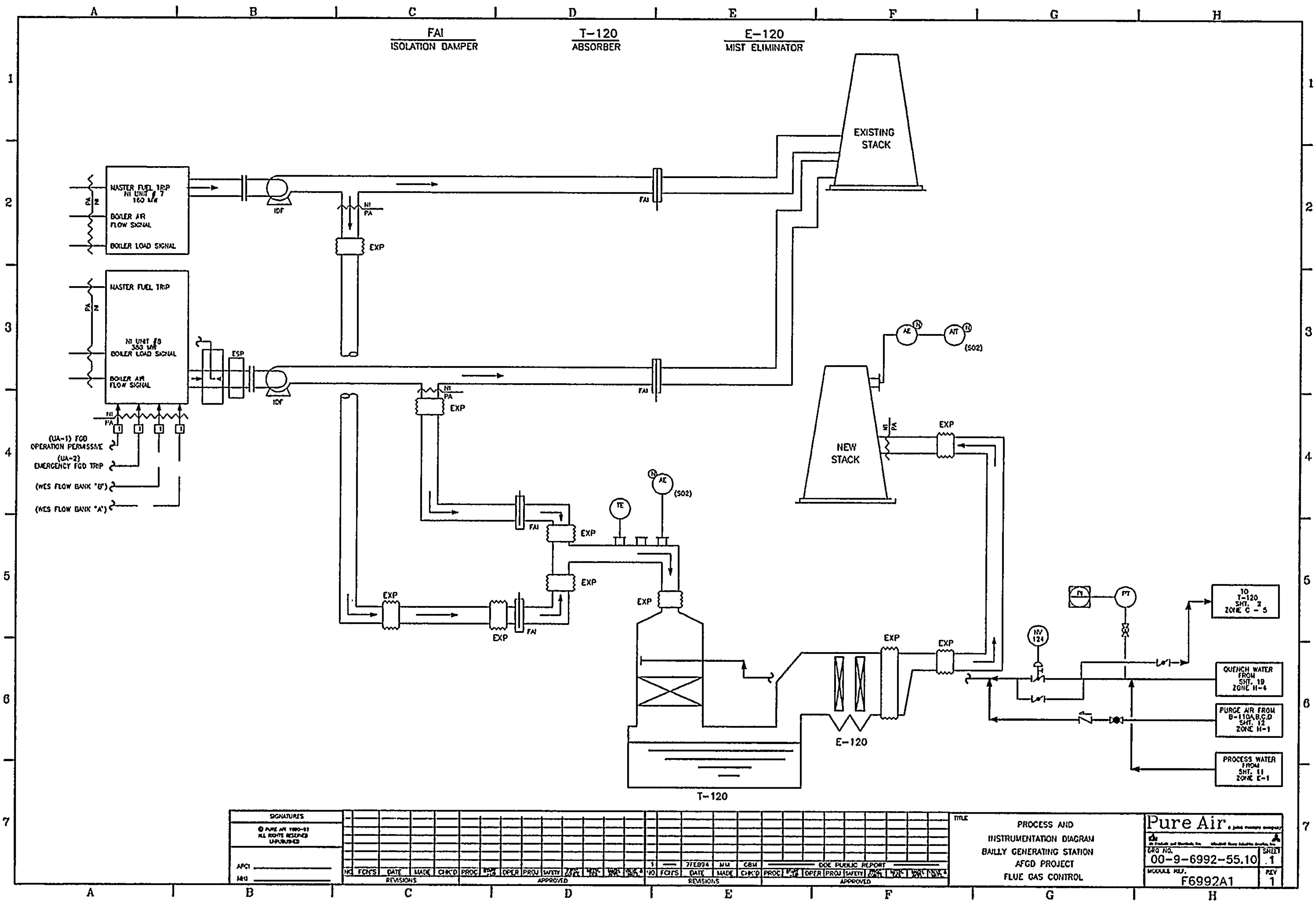
FAI
ISOLATION DAMPER
T-120
ABSORBER
E-120
MIST ELIMINATOR
EXISTING STACK
NEW STACK
MASTER FUEL TRIP
NI UNIT #7
160 MW
BOILER AIR FLOW SIGNAL
BOILER LOAD SIGNAL
MASTER FUEL TRIP
NI UNIT #8
350 MW
BOILER LOAD SIGNAL
BOILER AIR FLOW SIGNAL
(UA-1) FGD OPERATION PERMISSIVE
(UA-2) EMERGENCY FGD TRIP
(WES FLOW BANK "B")
(WES FLOW BANK "A")
ESP
IDF
EXP
NI
PA
FAI
TE
AE
AIT
(SO2)
E-120
T-120
HV 124
PT
TO T-120 SHT. 2 ZONE C - 5
QUENCH WATER FROM SHT. 19 ZONE H-4
PURGE AIR FROM B-110A,B,C,D SHT. 12 ZONE H-1
PROCESS WATER FROM SHT. 11 ZONE E-1
SIGNATURES
© PURE AIR 1990-92 ALL RIGHTS RESERVED UNPUBLISHED
APCI
MHI
NO. FCN'S DATE MADE CHK'D PROC OPER PROJ SAFETY
REVISIONS
APPROVED
1 — 7FEB94 MM CBM
DOE PUBLIC REPORT
TITLE
PROCESS AND INSTRUMENTATION DIAGRAM
BAILLY GENERATING STATION
AFGD PROJECT
FLUE GAS CONTROL
Pure Air
DRG NO.
00-9-6992-55.10
SHEET
1
MODULE REF.
F6992A1
REV
1

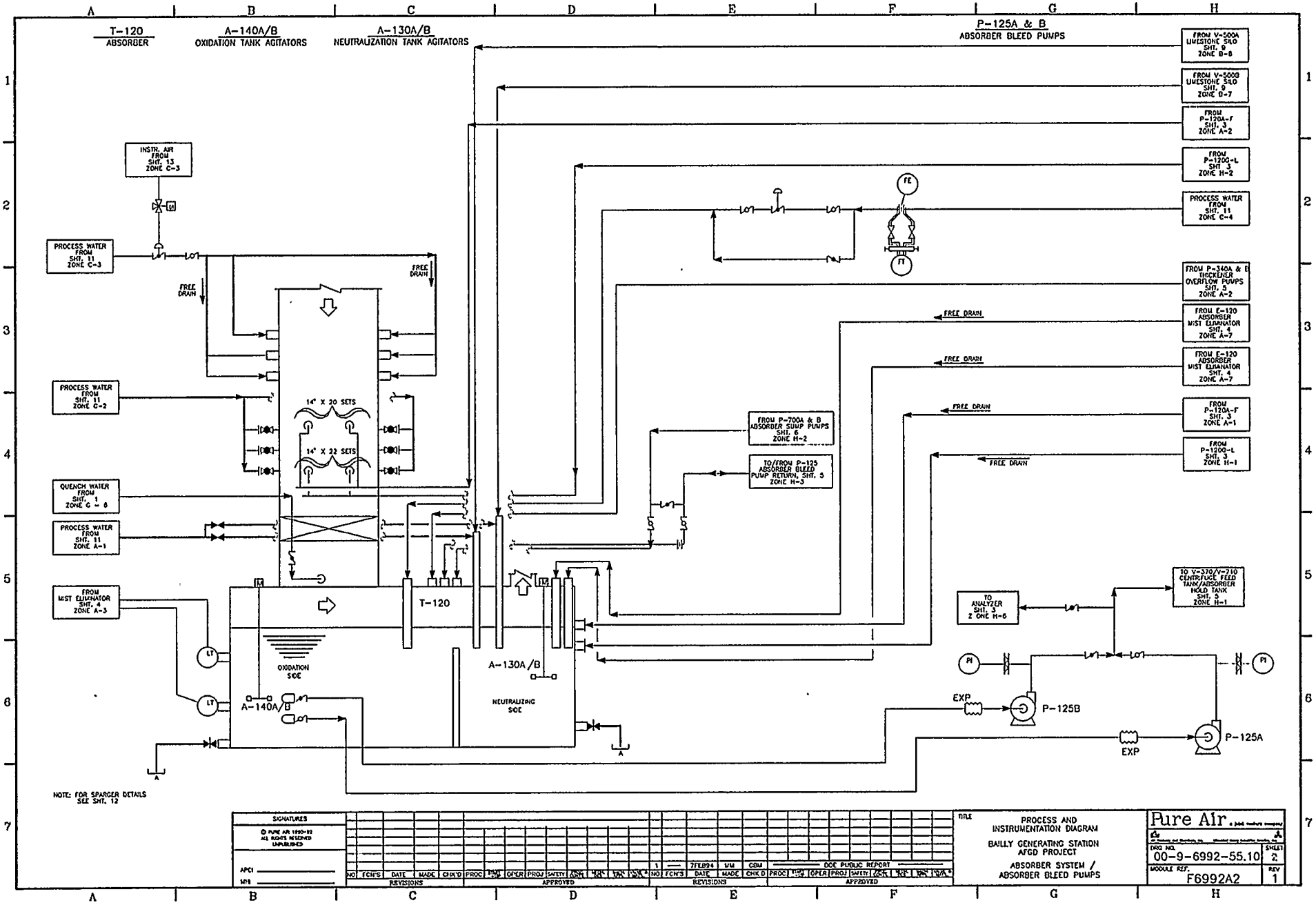
T-120
ABSORBER
A-140A/B
OXIDATION TANK AGITATORS
A-130A/B
NEUTRALIZATION TANK AGITATORS
P-125A & B
ABSORBER BLEED PUMPS
FROM V-500A LIMESTONE SILO SHT. 9 ZONE B-6
FROM V-500B LIMESTONE SILO SHT. 9 ZONE B-7
FROM P-120A-F SHT. 3 ZONE A-2
FROM P-120G-L SHT. 3 ZONE H-2
PROCESS WATER FROM SHT. 11 ZONE C-4
FROM P-340A & B THICKENER OVERFLOW PUMPS SHT. 5 ZONE A-2
FROM E-120 ABSORBER MIST ELIMINATOR SHT. 4 ZONE A-7
FROM E-120 ABSORBER MIST ELIMINATOR SHT. 4 ZONE A-7
FROM P-120A-F SHT. 3 ZONE A-1
FROM P-120G-L SHT. 3 ZONE H-1
INSTR. AIR FROM SHT. 13 ZONE C-3
PROCESS WATER FROM SHT. 11 ZONE C-3
FREE DRAIN
PROCESS WATER FROM SHT. 11 ZONE C-2
14" X 20 SETS
14" X 22 SETS
QUENCH WATER FROM SHT. 1 ZONE G - 6
PROCESS WATER FROM SHT. 11 ZONE A-1
FROM MIST ELIMINATOR SHT. 4 ZONE A-3
FROM P-700A & B ABSORBER SUMP PUMPS SHT. 6 ZONE H-2
TO/FROM P-125 ABSORBER BLEED PUMP RETURN, SHT. 5 ZONE H-3
TO ANALYZER SHT. 3 Z ONE H-6
TO V-370/V-710 CENTRIFUGE FEED TANK/ABSORBER HOLD TANK SHT. 5 ZONE H-1
T-120
OXIDATION SIDE
A-140A/B
A-130A/B
NEUTRALIZING SIDE
EXP
P-125B
P-125A
NOTE: FOR SPARGER DETAILS SEE SHT. 12
SIGNATURES
© PURE AIR 1990-92 ALL RIGHTS RESERVED UNPUBLISHED
APCI
MHI
REVISIONS
APPROVED
7FEB94
DOE PUBLIC REPORT
TITLE
PROCESS AND INSTRUMENTATION DIAGRAM
BAILLY GENERATING STATION AFGD PROJECT
ABSORBER SYSTEM / ABSORBER BLEED PUMPS
Pure Air
DRG NO. 00-9-6992-55.10
SHEET 2
MODULE REF. F6992A2
REV 1

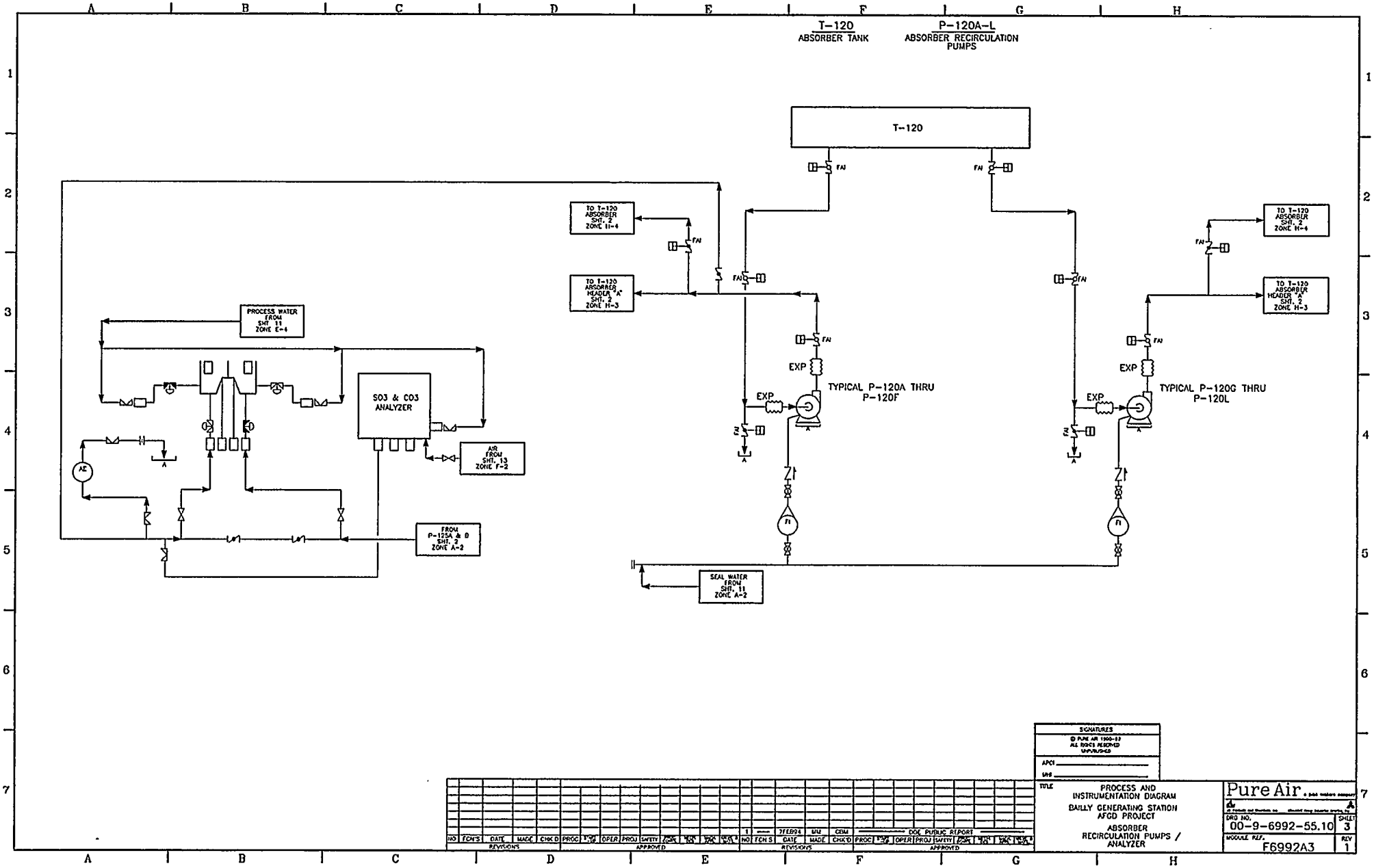
T-120
ABSORBER TANK
P-120A-L
ABSORBER RECIRCULATION PUMPS
T-120
FAI
TO T-120 ABSORBER SHT. 2 ZONE H-4
TO T-120 ABSORBER HEADER "A" SHT. 2 ZONE H-3
EXP
TYPICAL P-120A THRU P-120F
TYPICAL P-120G THRU P-120L
PROCESS WATER FROM SHT. 11 ZONE E-4
SO3 & CO3 ANALYZER
AIR FROM SHT. 13 ZONE F-2
FROM P-125A & B SHT. 2 ZONE A-2
SEAL WATER FROM SHT. 11 ZONE A-2
AE
SIGNATURES
APCI
UNS
TITLE
PROCESS AND INSTRUMENTATION DIAGRAM
BAILY GENERATING STATION
AFGD PROJECT
ABSORBER RECIRCULATION PUMPS / ANALYZER
Pure Air
DRG NO. 00-9-6992-55.10
SHEET 3
MODULE REF. F6992A3
REV 1
REVISIONS
APPROVED
DOC PUBLIC REPORT

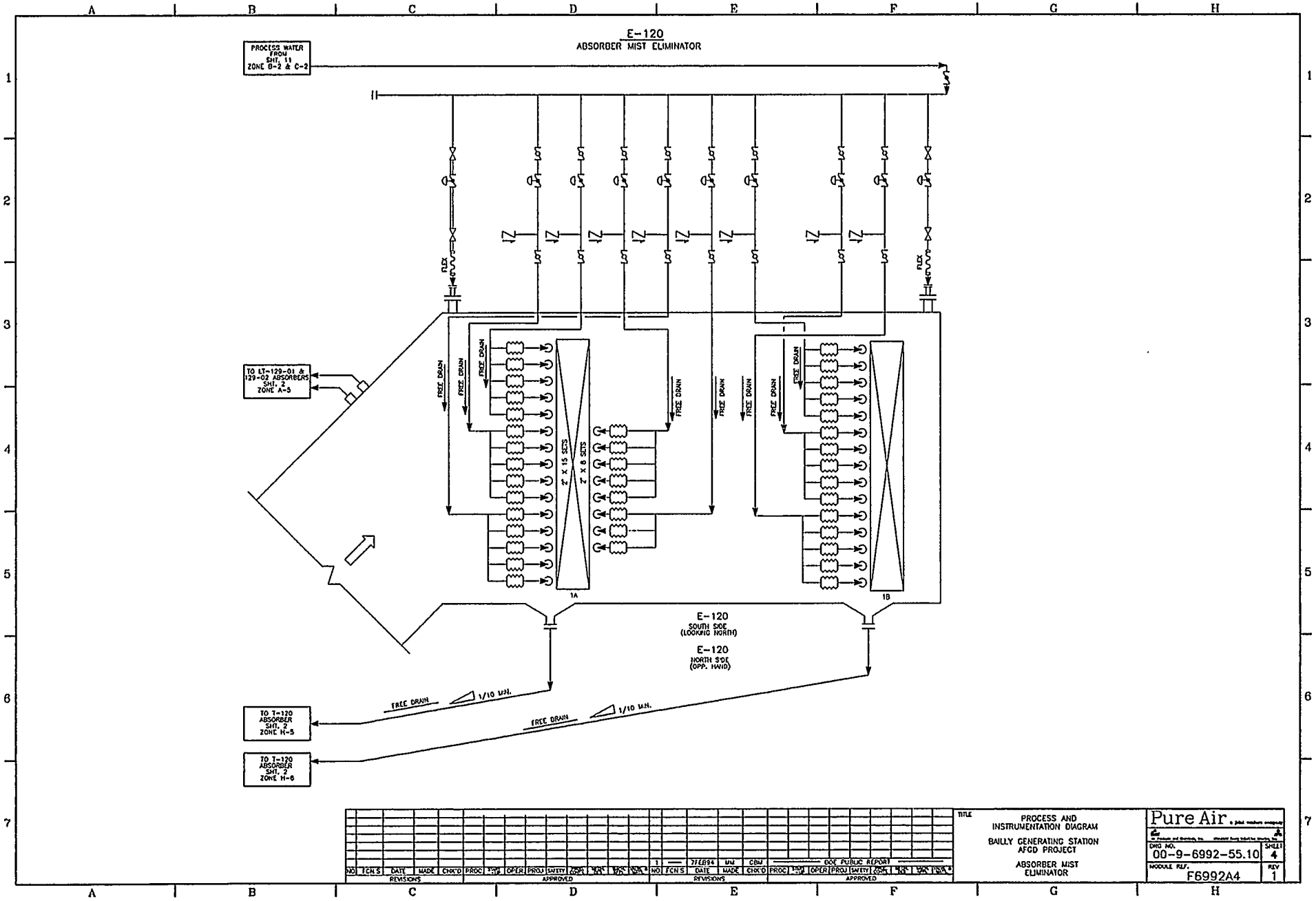
E-120
ABSORBER MIST ELIMINATOR
PROCESS WATER FROM SHT. 11 ZONE B-2 & C-2
FLEX
FREE DRAIN
TO LT-129-01 & 129-02 ABSORBERS SHT. 2 ZONE A-5
2" X 15 SETS
2" X 8 SETS
1A
1B
E-120
SOUTH SIDE (LOOKING NORTH)
E-120
NORTH SIDE (OPP. HAND)
1/10 MIN.
TO T-120 ABSORBER SHT. 2 ZONE H-5
TO T-120 ABSORBER SHT. 2 ZONE H-6
TITLE
PROCESS AND INSTRUMENTATION DIAGRAM
BAILLY GENERATING STATION
AFGD PROJECT
ABSORBER MIST ELIMINATOR
Pure Air
DWG NO. 00-9-6992-55.10
SHEET 4
MODULE REF. F6992A4
REV 1
REVISIONS
APPROVED
DOE PUBLIC REPORT

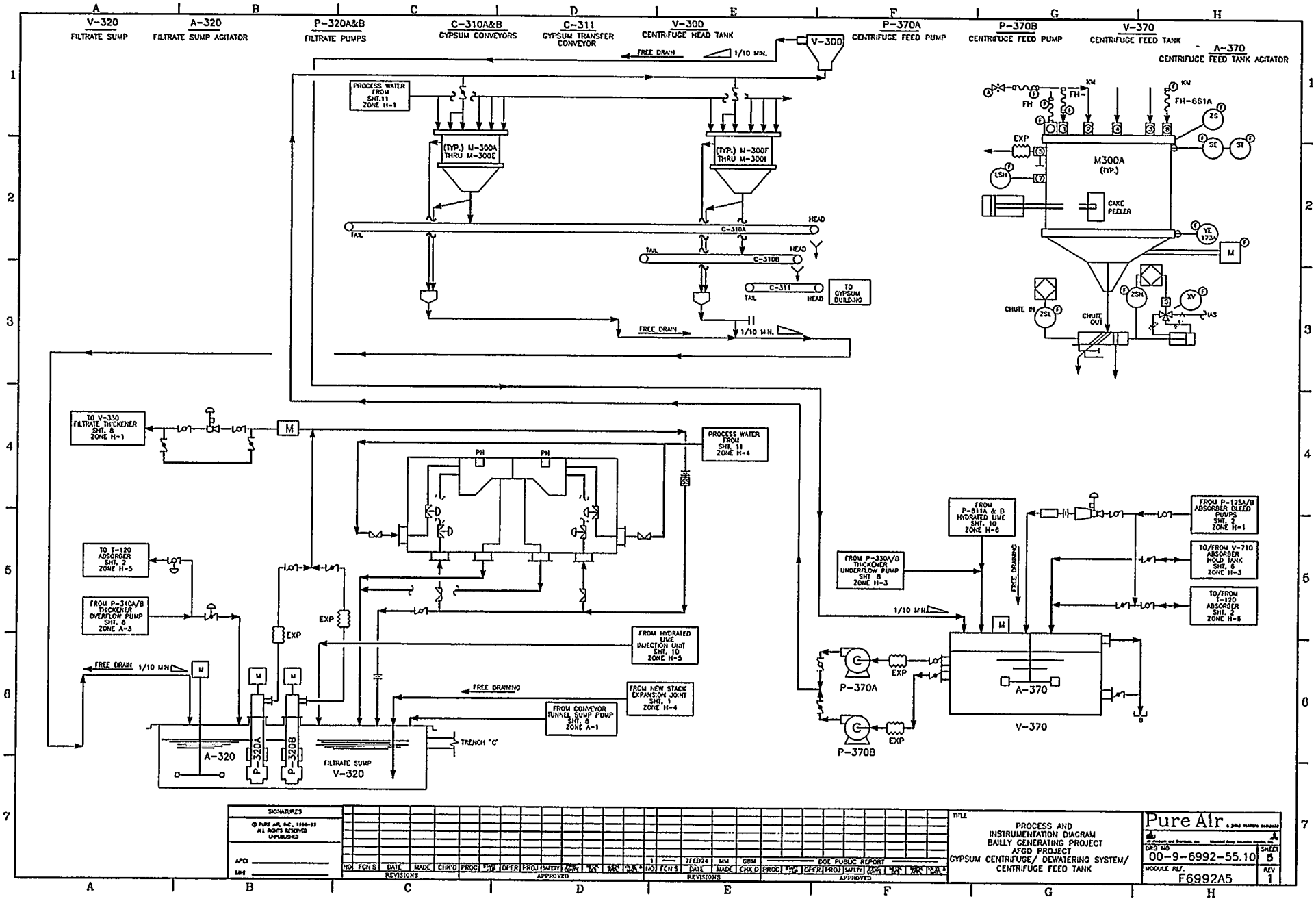
V-320
FILTRATE SUMP
A-320
FILTRATE SUMP AGITATOR
P-320A&B
FILTRATE PUMPS
C-310A&B
GYPSUM CONVEYORS
C-311
GYPSUM TRANSFER CONVEYOR
V-300
CENTRIFUGE HEAD TANK
P-370A
CENTRIFUGE FEED PUMP
P-370B
CENTRIFUGE FEED PUMP
V-370
CENTRIFUGE FEED TANK
A-370
CENTRIFUGE FEED TANK AGITATOR
FREE DRAIN
1/10 MIN.
PROCESS WATER FROM SHT. 11 ZONE H-1
(TYP.) M-300A THRU M-300E
(TYP.) M-300F THRU M-300I
C-310A
C-310B
C-311
TO GYPSUM BUILDING
HEAD
TAIL
M300A (TYP.)
CAKE PEELER
CHUTE IN
CHUTE OUT
FH-661A
TO V-330 FILTRATE THICKENER SHT. 8 ZONE H-1
PROCESS WATER FROM SHT. 11 ZONE H-4
PH
TO T-120 ABSORBER SHT. 2 ZONE H-5
FROM P-340A/B THICKENER OVERFLOW PUMP SHT. 8 ZONE A-3
EXP
FROM HYDRATED LIME INJECTION UNIT SHT. 10 ZONE H-5
FROM NEW STACK EXPANSION JOINT SHT. 1 ZONE H-4
FROM CONVEYOR TUNNEL SUMP PUMP SHT. 8 ZONE A-1
TRENCH "C"
FREE DRAINING
A-320
P-320A
P-320B
FILTRATE SUMP
V-320
FROM P-811A & B HYDRATED LIME SHT. 10 ZONE H-6
FROM P-330A/B THICKENER UNDERFLOW PUMP SHT. 8 ZONE H-3
FROM P-125A/B ABSORBER BLEED PUMPS SHT. 2 ZONE H-1
TO/FROM V-710 ABSORBER HOLD TANK SHT. 6 ZONE H-3
TO/FROM T-120 ABSORBER SHT. 2 ZONE H-6
P-370A
P-370B
A-370
V-370
SIGNATURES
APCI
MHI
REVISIONS
APPROVED
DOE PUBLIC REPORT
TITLE
PROCESS AND INSTRUMENTATION DIAGRAM
BAILLY GENERATING PROJECT
AFGD PROJECT
GYPSUM CENTRIFUGE/ DEWATERING SYSTEM/ CENTRIFUGE FEED TANK
Pure Air
DRG NO 00-9-6992-55.10
SHEET 5
MODULE REF. F6992A5
REV 1

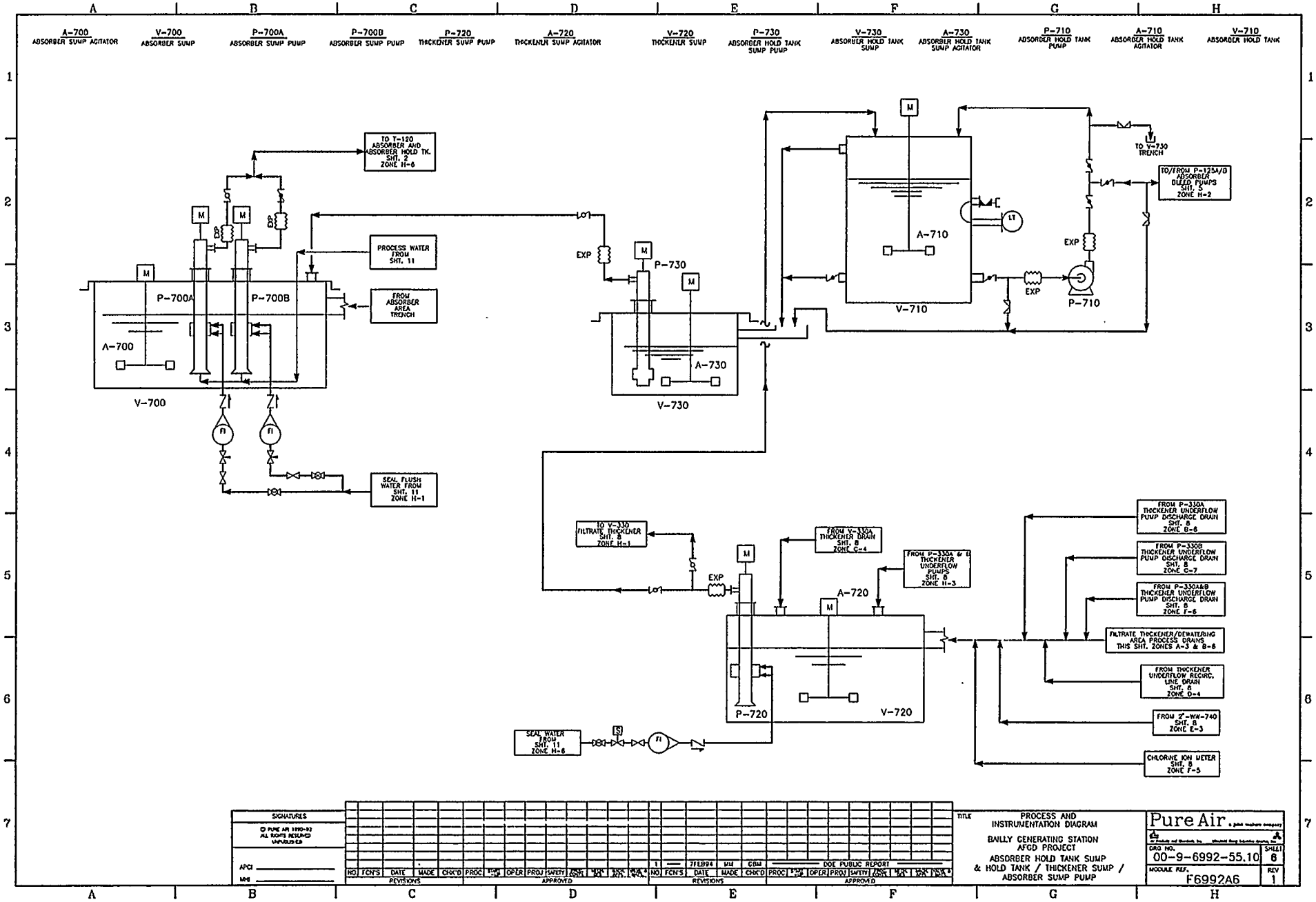
A-700 ABSORBER SUMP AGITATOR
V-700 ABSORBER SUMP
P-700A ABSORBER SUMP PUMP
P-700B ABSORBER SUMP PUMP
P-720 THICKENER SUMP PUMP
A-720 THICKENER SUMP AGITATOR
V-720 THICKENER SUMP
P-730 ABSORBER HOLD TANK SUMP PUMP
V-730 ABSORBER HOLD TANK SUMP
A-730 ABSORBER HOLD TANK SUMP AGITATOR
P-710 ABSORBER HOLD TANK PUMP
A-710 ABSORBER HOLD TANK AGITATOR
V-710 ABSORBER HOLD TANK
TO T-120 ABSORBER AND ABSORBER HOLD TK. SHT. 2 ZONE H-6
PROCESS WATER FROM SHT. 11
FROM ABSORBER AREA TRENCH
SEAL FLUSH WATER FROM SHT. 11 ZONE H-1
TO V-730 TRENCH
TO/FROM P-125A/B ABSORBER BLEED PUMPS SHT. 5 ZONE H-2
TO V-330 FILTRATE THICKENER SHT. 8 ZONE H-1
FROM V-330A THICKENER DRAIN SHT. 8 ZONE C-4
FROM P-330A & B THICKENER UNDERFLOW PUMPS SHT. 8 ZONE H-3
FROM P-330A THICKENER UNDERFLOW PUMP DISCHARGE DRAIN SHT. 8 ZONE B-6
FROM P-330B THICKENER UNDERFLOW PUMP DISCHARGE DRAIN SHT. 8 ZONE C-7
FROM P-330A&B THICKENER UNDERFLOW PUMP DISCHARGE DRAIN SHT. 8 ZONE F-6
FILTRATE THICKENER/DEWATERING AREA PROCESS DRAINS THIS SHT. ZONES A-3 & B-6
FROM THICKENER UNDERFLOW RECIRC. LINE DRAIN SHT. 8 ZONE D-4
FROM 2"-WW-740 SHT. 8 ZONE E-3
CHLORINE ION METER SHT. 8 ZONE F-5
SEAL WATER FROM SHT. 11 ZONE H-6
SIGNATURES
APCI
MNI
NO. FCN'S DATE MADE CHK'D PROC OPER PROJ SAFETY
REVISIONS
APPROVED
1 7FEB94 MM GBM DOE PUBLIC REPORT
TITLE PROCESS AND INSTRUMENTATION DIAGRAM
BAILLY GENERATING STATION AFGD PROJECT
ABSORBER HOLD TANK SUMP & HOLD TANK / THICKENER SUMP / ABSORBER SUMP PUMP
Pure Air
DRG NO. 00-9-6992-55.10
SHEET 6
MODULE REF. F6992A6
REV 1

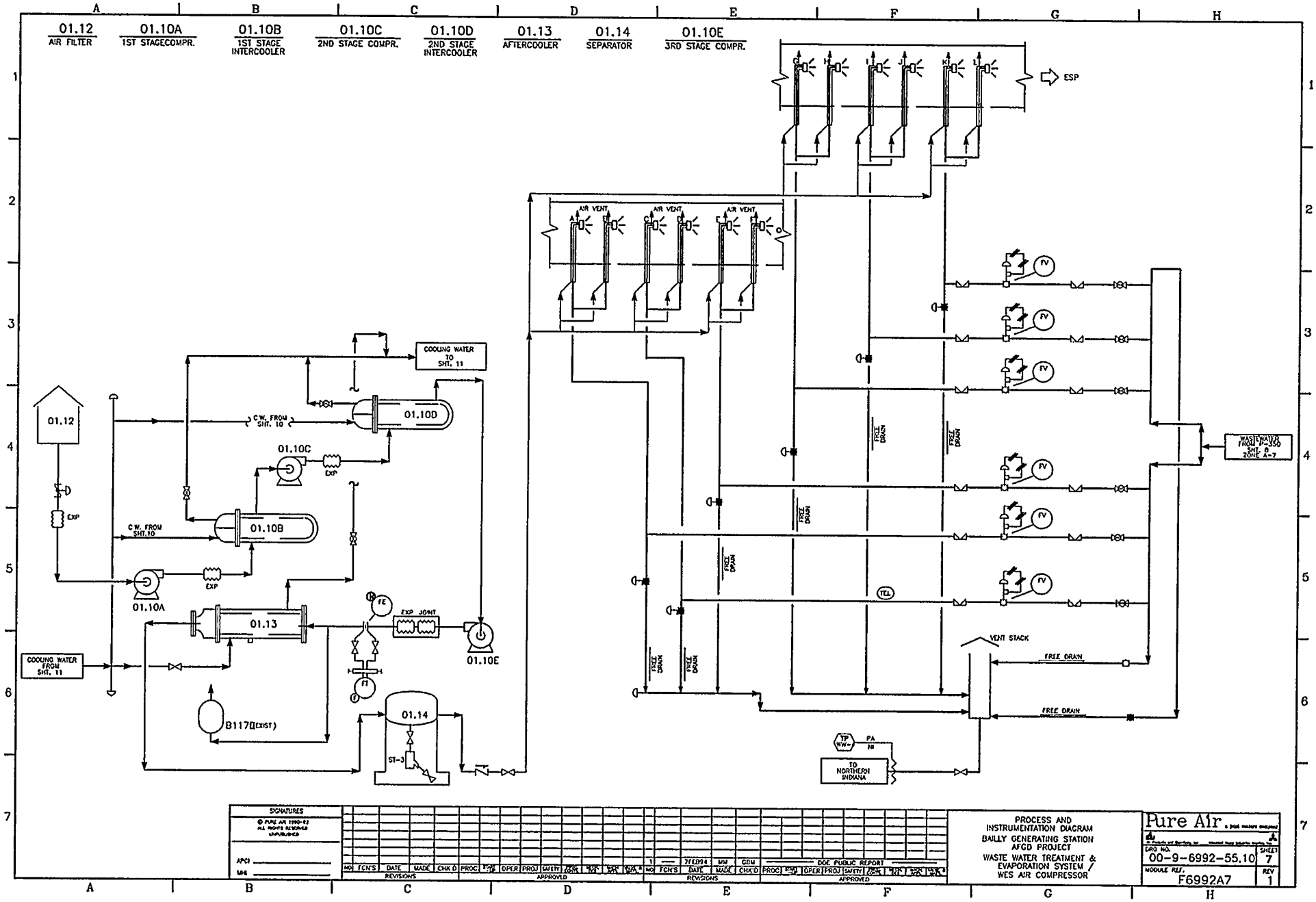
01.12
AIR FILTER
01.10A
1ST STAGECOMPR.
01.10B
1ST STAGE INTERCOOLER
01.10C
2ND STAGE COMPR.
01.10D
2ND STAGE INTERCOOLER
01.13
AFTERCOOLER
01.14
SEPARATOR
01.10E
3RD STAGE COMPR.
ESP
AIR VENT
COOLING WATER TO SHT. 11
C.W. FROM SHT. 10
EXP
EXP JOINT
B117(EXIST)
ST-3
FREE DRAIN
VENT STACK
WASTEWATER FROM P-350 SHT. 8 ZONE A-7
TO NORTHERN INDIANA
SIGNATURES
PROCESS AND INSTRUMENTATION DIAGRAM
BAILLY GENERATING STATION
AFGD PROJECT
WASTE WATER TREATMENT & EVAPORATION SYSTEM / WES AIR COMPRESSOR
Pure Air
DRG NO. 00-9-6992-55.10
SHEET 7
MODULE REF. F6992A7
REV 1

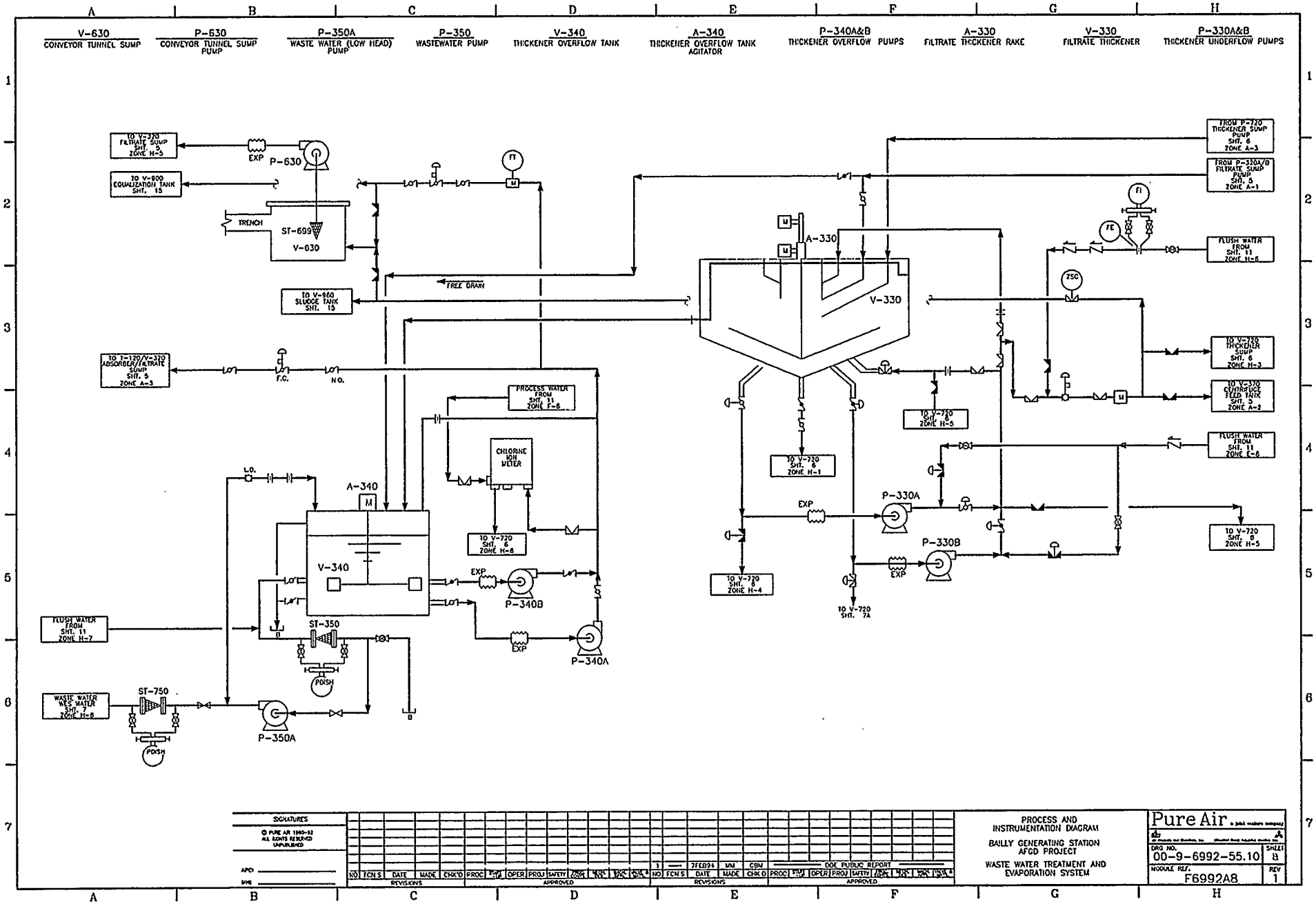
V-630
CONVEYOR TUNNEL SUMP
P-630
CONVEYOR TUNNEL SUMP PUMP
P-350A
WASTE WATER (LOW HEAD) PUMP
P-350
WASTEWATER PUMP
V-340
THICKENER OVERFLOW TANK
A-340
THICKENER OVERFLOW TANK AGITATOR
P-340A&B
THICKENER OVERFLOW PUMPS
A-330
FILTRATE THICKENER RAKE
V-330
FILTRATE THICKENER
P-330A&B
THICKENER UNDERFLOW PUMPS
TO V-320 FILTRATE SUMP SHT. 5 ZONE H-5
TO V-900 EQUALIZATION TANK SHT. 15
TO V-960 SLUDGE TANK SHT. 15
TO T-120/V-320 ABSORBER/FILTRATE SUMP SHT. 5 ZONE A-3
FROM P-720 THICKENER SUMP PUMP SHT. 6 ZONE A-3
FROM P-320A/B FILTRATE SUMP PUMP SHT. 5 ZONE A-1
FLUSH WATER FROM SHT. 11 ZONE H-6
TO V-720 THICKENER SUMP SHT. 6 ZONE H-3
TO V-370 CENTRIFUGE FEED TANK SHT. 5 ZONE A-2
FLUSH WATER FROM SHT. 11 ZONE E-6
TO V-720 SHT. 6 ZONE H-5
TO V-720 SHT. 6 ZONE H-1
TO V-720 SHT. 6 ZONE H-4
TO V-720 SHT. 7A
TO V-720 SHT. 6 ZONE H-6
PROCESS WATER FROM SHT. 11 ZONE F-6
CHLORINE ION METER
FLUSH WATER FROM SHT. 11 ZONE H-7
WASTE WATER WES WATER SHT. 7 ZONE H-6
TRENCH
ST-699
ST-350
ST-750
P-630
P-340B
P-340A
P-350A
P-330A
P-330B
EXP
FREE DRAIN
F.C.
N.O.
L.O.
PDISH
SIGNATURES
PROCESS AND INSTRUMENTATION DIAGRAM
BAILLY GENERATING STATION AFGD PROJECT
WASTE WATER TREATMENT AND EVAPORATION SYSTEM
Pure Air
DRG NO. 00-9-6992-55.10
SHEET 8
MODULE REF. F6992A8
REV 1
DOE PUBLIC REPORT
REVISIONS
APPROVED

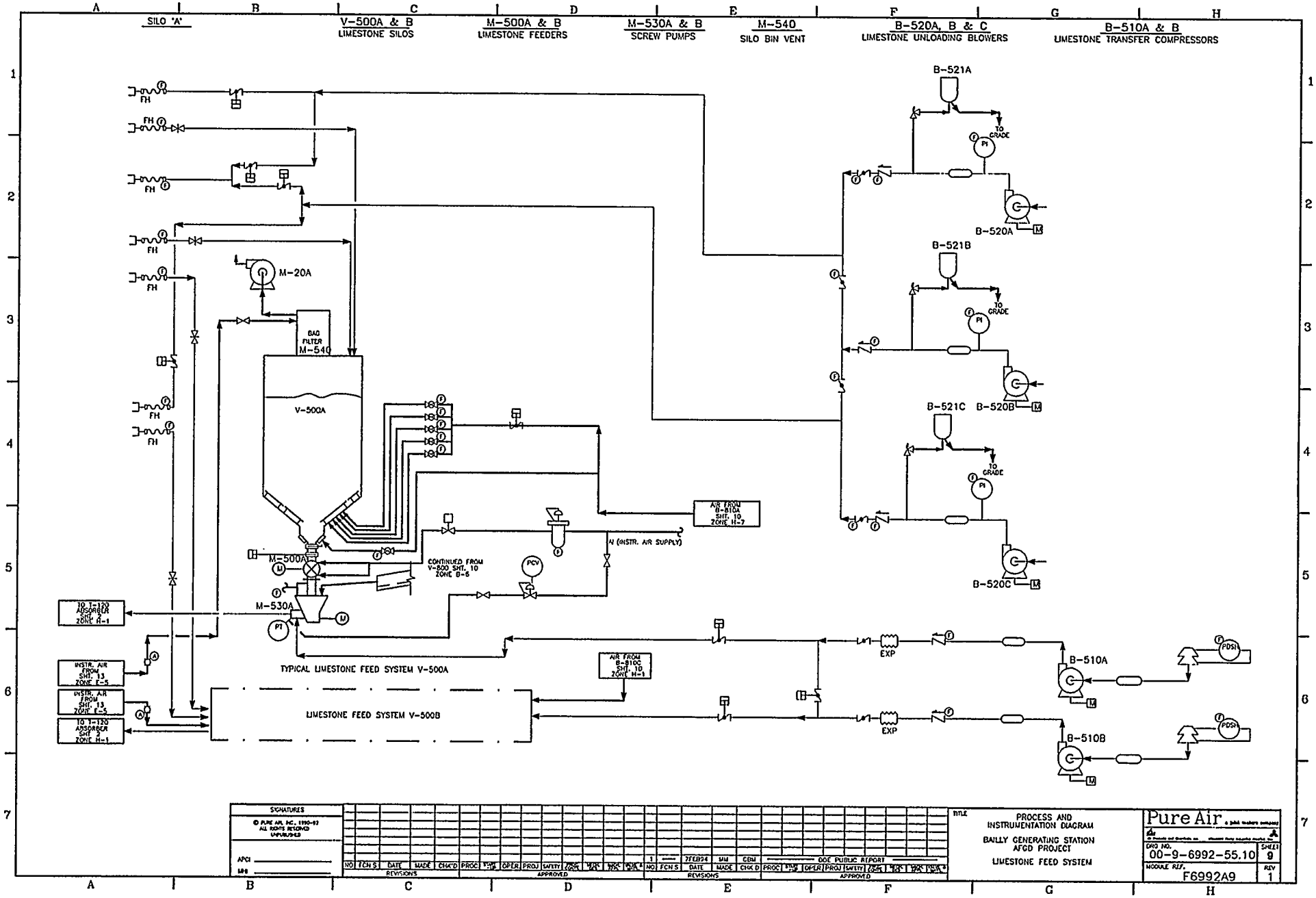
SILO 'A'
V-500A & B
LIMESTONE SILOS
M-500A & B
LIMESTONE FEEDERS
M-530A & B
SCREW PUMPS
M-540
SILO BIN VENT
B-520A, B & C
LIMESTONE UNLOADING BLOWERS
B-510A & B
LIMESTONE TRANSFER COMPRESSORS
B-521A
B-520A
B-521B
B-520B
B-521C
B-520C
TO GRADE
M-20A
BAG FILTER M-540
V-500A
M-500A
M-530A
CONTINUED FROM V-800 SHT. 10 ZONE B-6
AIR FROM B-810A SHT. 10 ZONE H-7
AI (INSTR. AIR SUPPLY)
TO T-120 ADSORBER SHT. 2 ZONE H-1
INSTR. AIR FROM SHT. 13 ZONE E-5
TYPICAL LIMESTONE FEED SYSTEM V-500A
AIR FROM B-810C SHT. 10 ZONE H-1
LIMESTONE FEED SYSTEM V-500B
EXP
B-510A
B-510B
PDSH
SIGNATURES
© PURE AIR, INC., 1990-92
ALL RIGHTS RESERVED
UNPUBLISHED
APCI
MHI
REVISIONS
APPROVED
DOE PUBLIC REPORT
TITLE
PROCESS AND INSTRUMENTATION DIAGRAM
BAILLY GENERATING STATION
AFGD PROJECT
LIMESTONE FEED SYSTEM
Pure Air
DRG NO.
00-9-6992-55.10
SHEET
9
MODULE REF.
F6992A9
REV
1

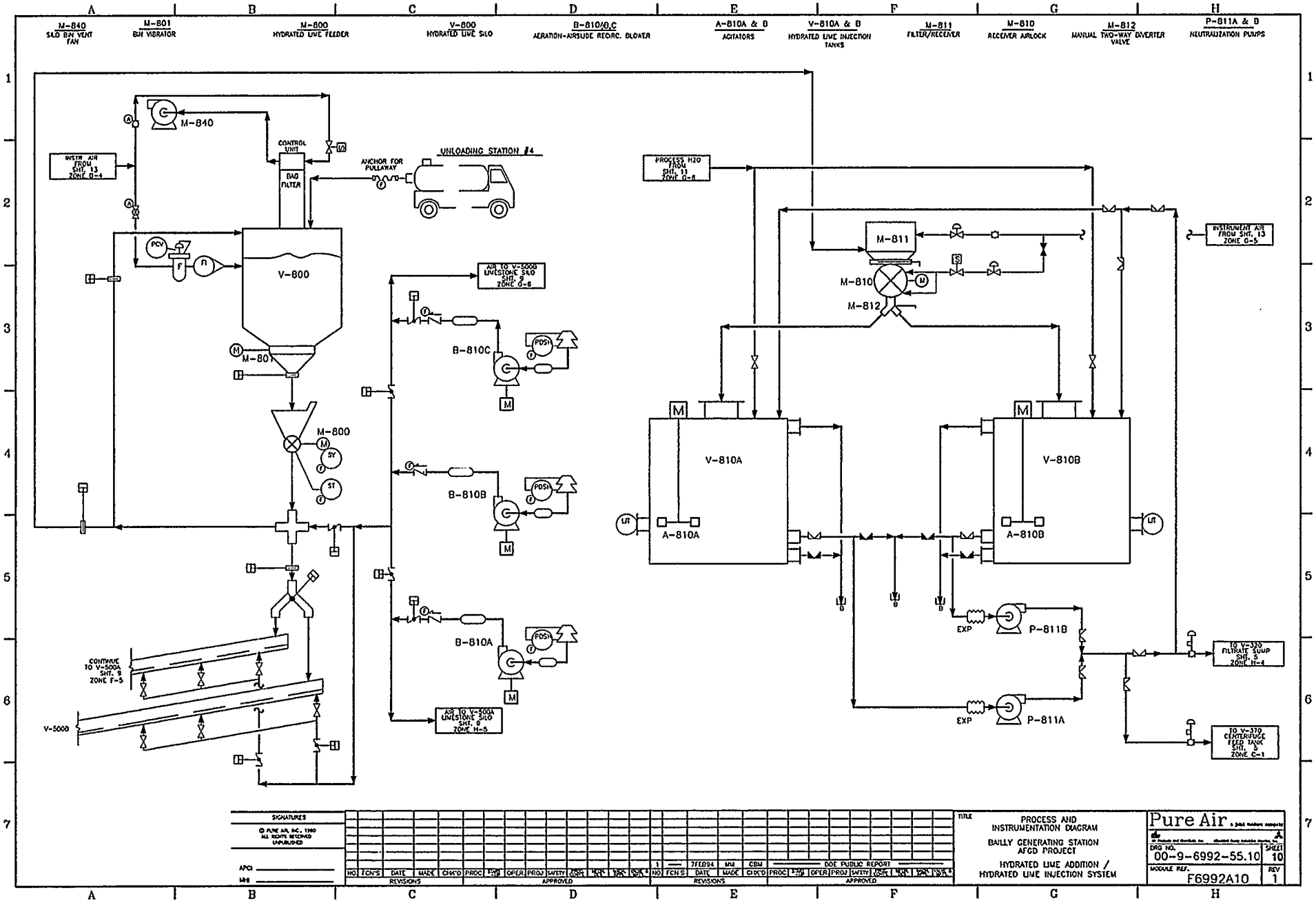
M-840 SILO BIN VENT FAN
M-801 BIN VIBRATOR
M-800 HYDRATED LIME FEEDER
V-800 HYDRATED LIME SILO
B-810A,B,C AERATION-AIRSIDE RECIRC. BLOWER
A-810A & B AGITATORS
V-810A & B HYDRATED LIME INJECTION TANKS
M-811 FILTER/RECEIVER
M-810 RECEIVER AIRLOCK
M-812 MANUAL TWO-WAY DIVERTER VALVE
P-811A & B NEUTRALIZATION PUMPS
M-840
INSTR. AIR FROM SHT. 13 ZONE D-4
CONTROL UNIT
BAG FILTER
ANCHOR FOR PULLAWAY
UNLOADING STATION #4
PCV
FI
V-800
M-801
M-800
SY
ST
AIR TO V-5000 LIMESTONE SILO SHT. 9 ZONE G-6
B-810C
B-810B
B-810A
PDSH
AIR TO V-5000A LIMESTONE SILO SHT. 9 ZONE H-5
CONTINUE TO V-5000A SHT. 9 ZONE F-5
V-5000
PROCESS H2O FROM SHT. 11 ZONE G-8
M-811
M-810
M-812
INSTRUMENT AIR FROM SHT. 13 ZONE D-5
V-810A
V-810B
A-810A
A-810B
LIT
EXP
P-811B
P-811A
TO V-320 FILTRATE SUMP SHT. 5 ZONE H-4
TO V-370 CENTERFUGE FEED TANK SHT. 5 ZONE C-1
SIGNATURES
© PURE AIR, INC., 1990 ALL RIGHTS RESERVED UNPUBLISHED
APCI
NO FCN'S DATE MADE CHK'D PROC OPER PROJ SAFETY
REVISIONS
APPROVED
1 7FEB94 MM CBM
DOE PUBLIC REPORT
TITLE
PROCESS AND INSTRUMENTATION DIAGRAM
BAILLY GENERATING STATION AFGD PROJECT
HYDRATED LIME ADDITION / HYDRATED LIME INJECTION SYSTEM
Pure Air
DRO NO. 00-9-6992-55.10
SHEET 10
MODULE REF. F6992A10
REV 1

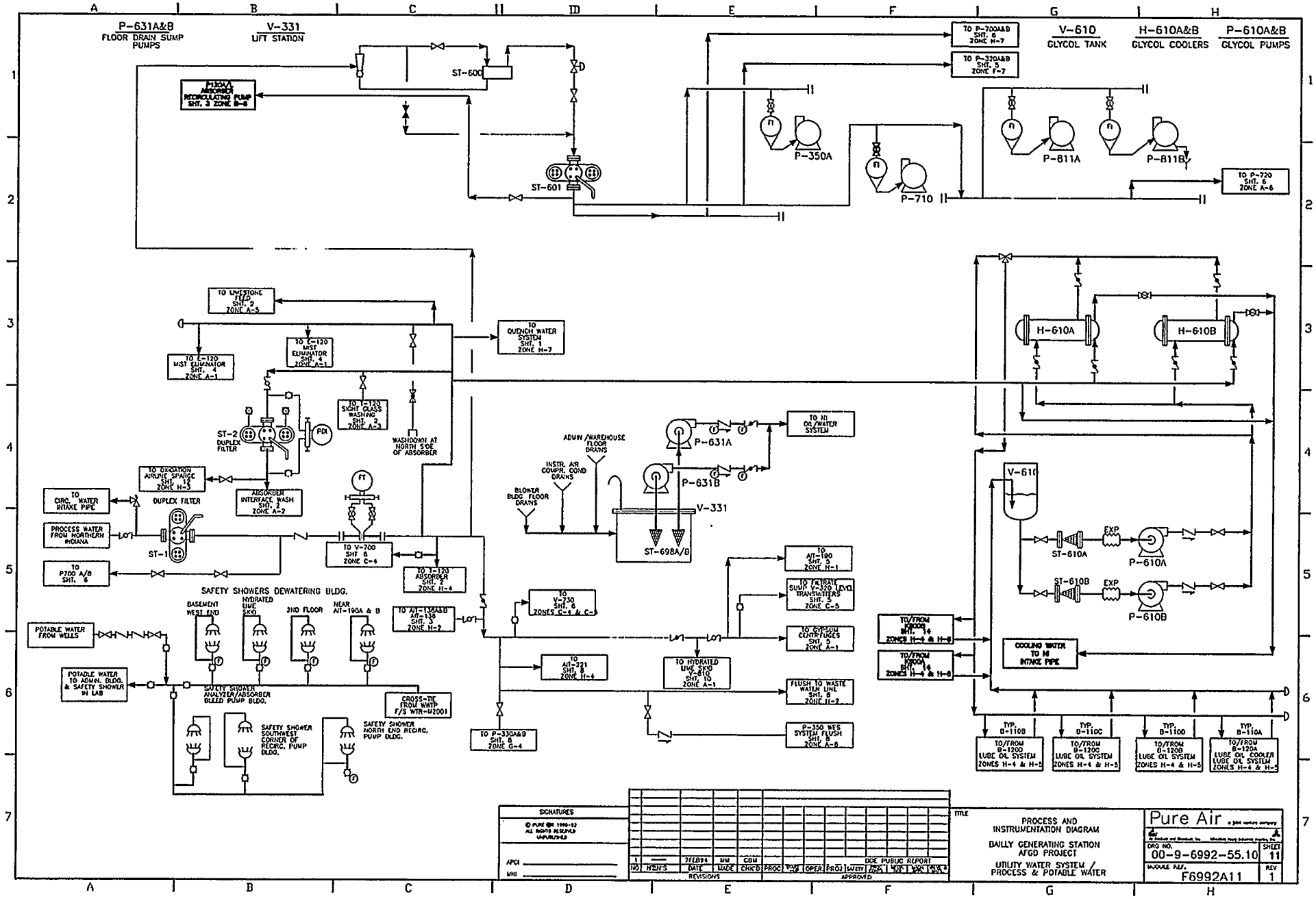
P-631A&B
FLOOR DRAIN SUMP PUMPS
V-331
LIFT STATION
V-610
GLYCOL TANK
H-610A&B
GLYCOL COOLERS
P-610A&B
GLYCOL PUMPS
ST-600
ST-601
P-350A
P-710
P-811A
P-811B
H-610A
H-610B
V-610
ST-610A
ST-610B
P-610A
P-610B
EXP
P-631A
P-631B
V-331
ST-698A/B
ST-2
DUPLEX FILTER
ST-1
DUPLEX FILTER
WASHDOWN AT NORTH SIDE OF ABSORBER
ADMIN./WAREHOUSE FLOOR DRAINS
INSTR. AIR COMPR. COND DRAINS
BLOWER BLDG FLOOR DRAINS
TO NI OIL/WATER SYSTEM
TO QUENCH WATER SYSTEM SHT. 1 ZONE H-7
TO LIMESTONE FEED SHT. 2 ZONE A-5
TO E-120 MIST ELIMINATOR SHT. 4 ZONE A-1
TO T-120 SIGHT GLASS WASHING SHT. 2 ZONE A-3
TO OXIDATION AIRLINE SPARGE SHT. 12 ZONE H-3
ABSORBER INTERFACE WASH SHT. 2 ZONE A-2
TO CIRC. WATER INTAKE PIPE
PROCESS WATER FROM NORTHERN INDIANA
TO P700 A/B SHT. 6
TO V-700 SHT 6 ZONE C-4
TO T-120 ABSORBER SHT. 2 ZONE H-4
SAFETY SHOWERS DEWATERING BLDG.
BASEMENT WEST END
HYDRATED LIME SKID
2ND FLOOR
NEAR AIT-190A & B
POTABLE WATER FROM WELLS
POTABLE WATER TO ADMIN. BLDG. & SAFETY SHOWER IN LAB
SAFETY SHOWER ANALYZER/ABSORBER BLEED PUMP BLDG.
CROSS-TIE FROM WWTP F/S WTR-M2001
SAFETY SHOWER SOUTHWEST CORNER OF RECIRC. PUMP BLDG.
SAFETY SHOWER NORTH END RECIRC. PUMP BLDG.
TO AIT-136A&B AIT-136 SHT. 3 ZONE H-2
TO V-730 SHT. 6 ZONES C-4 & C-5
TO AIT-221 SHT. 8 ZONE H-4
TO P-330A&B SHT. 8 ZONE G-4
TO AIT-190 SHT. 5 ZONE H-1
TO FILTRATE SUMP V-320 LEVEL TRANSMITTERS SHT. 5 ZONE C-5
TO GYPSUM CENTRIFUGES SHT. 5 ZONE A-1
TO HYDRATED LIME SKID V-610 SHT. 10 ZONE A-1
FLUSH TO WASTE WATER LINE SHT. 8 ZONE H-2
P-350 WES SYSTEM FLUSH SHT. 8 ZONE A-6
TO/FROM K600B SHT. 14 ZONES H-4 & H-5
TO/FROM K600A SHT. 14 ZONES H-4 & H-5
COOLING WATER TO NI INTAKE PIPE
TYP. B-110B TO/FROM B-120D LUBE OIL SYSTEM ZONES H-4 & H-5
TYP. B-110C TO/FROM B-120C LUBE OIL SYSTEM ZONES H-4 & H-5
TYP. B-110D TO/FROM B-120B LUBE OIL SYSTEM ZONES H-4 & H-5
TYP. B-110A TO/FROM B-120A LUBE OIL COOLER LUBE OIL SYSTEM ZONES H-4 & H-5
SIGNATURES
APCI
MHI
7FEB94
MM
CBM
DOE PUBLIC REPORT
REVISIONS
APPROVED
TITLE
PROCESS AND INSTRUMENTATION DIAGRAM
BAILLY GENERATING STATION
AFGD PROJECT
UTILITY WATER SYSTEM / PROCESS & POTABLE WATER
Pure Air
DRG NO. 00-9-6992-55.10
SHEET 11
MODULE REF. F6992A11
REV 1

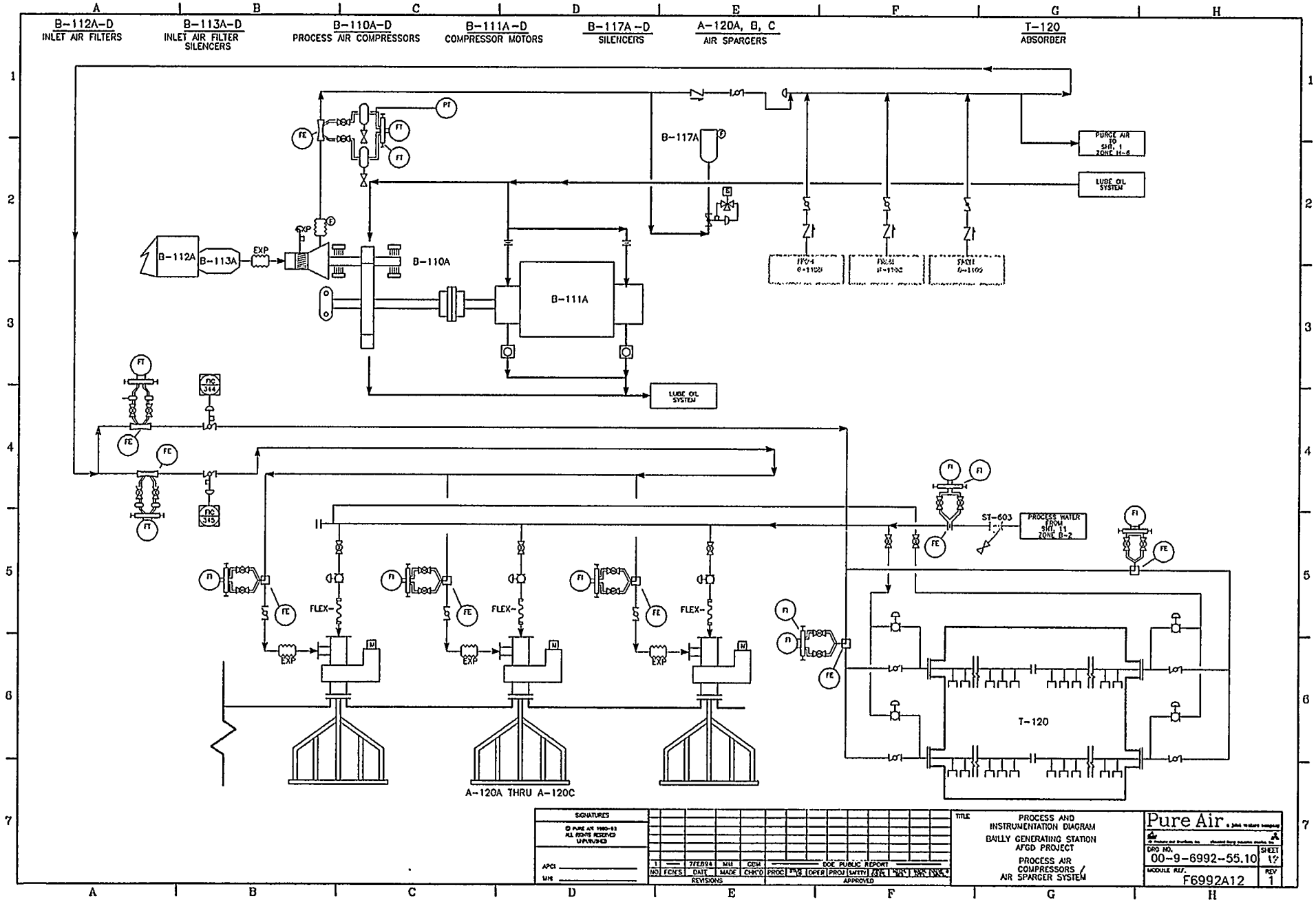
B-112A-D
INLET AIR FILTERS
B-113A-D
INLET AIR FILTER SILENCERS
B-110A-D
PROCESS AIR COMPRESSORS
B-111A-D
COMPRESSOR MOTORS
B-117A-D
SILENCERS
A-120A, B, C
AIR SPARGERS
T-120
ABSORBER
B-117A
B-112A
B-113A
EXP
B-110A
B-111A
LUBE OIL SYSTEM
PURGE AIR TO SHT. 1 ZONE H-6
FIC 344
FIC 345
FLEX-
ST-603
PROCESS WATER FROM SHT. 11 ZONE B-2
T-120
A-120A THRU A-120C
SIGNATURES
APCI
MHI
DOE PUBLIC REPORT
REVISIONS
APPROVED
TITLE
PROCESS AND INSTRUMENTATION DIAGRAM
BAILLY GENERATING STATION
AFGD PROJECT
PROCESS AIR COMPRESSORS / AIR SPARGER SYSTEM
Pure Air
DRG NO.
00-9-6992-55.10
SHEET
MODULE REF.
F6992A12
REV
1

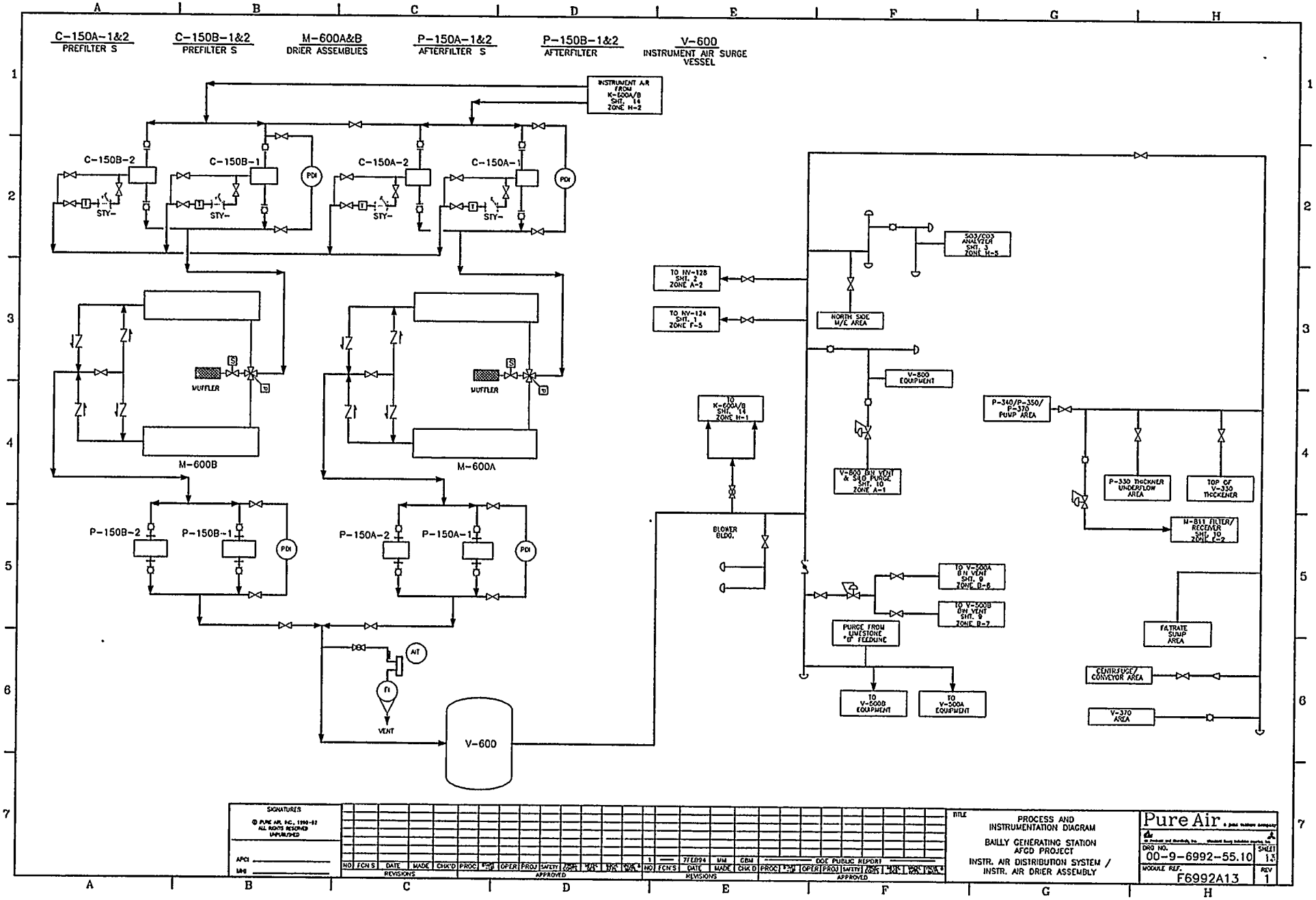
C-150A-1&2
PREFILTER S
C-150B-1&2
PREFILTER S
M-600A&B
DRIER ASSEMBLIES
P-150A-1&2
AFTERFILTER S
P-150B-1&2
AFTERFILTER
V-600
INSTRUMENT AIR SURGE VESSEL
INSTRUMENT AIR FROM K-600A/B SHT. 14 ZONE H-2
C-150B-2
C-150B-1
C-150A-2
C-150A-1
STY-
PDI
MUFFLER
M-600B
M-600A
P-150B-2
P-150B-1
P-150A-2
P-150A-1
AIT
FI
VENT
V-600
TO NV-128 SHT. 2 ZONE A-2
TO NV-124 SHT. 1 ZONE F-5
TO K-600A/B SHT. 14 ZONE H-1
BLOWER BLDG.
SO3/CO3 ANALYZER SHT. 3 ZONE H-5
NORTH SIDE M/E AREA
V-800 EQUIPMENT
V-800 BIN VENT & SILO PURGE SHT. 10 ZONE A-1
P-340/P-350/ P-370 PUMP AREA
P-330 THICKNER UNDERFLOW AREA
TOP OF V-330 THICKENER
M-811 FILTER/ RECEIVER SHT. 10 ZONE E-2
TO V-500A BIN VENT SHT. 9 ZONE B-6
TO V-500B BIN VENT SHT. 9 ZONE B-7
PURGE FROM LIMESTONE "B" FEEDLINE
TO V-500B EQUIPMENT
TO V-500A EQUIPMENT
FILTRATE SUMP AREA
CENTRIFUGE/ CONVEYOR AREA
V-370 AREA
SIGNATURES
© PURE AIR, INC., 1990-92 ALL RIGHTS RESERVED UNPUBLISHED
APCI
MHI
NO FCN'S DATE MADE CHK'D PROC OPER PROJ SAFETY
REVISIONS
APPROVED
1 7FEB94 MM GBM
DOE PUBLIC REPORT
TITLE
PROCESS AND INSTRUMENTATION DIAGRAM
BAILLY GENERATING STATION AFGD PROJECT
INSTR. AIR DISTRIBUTION SYSTEM / INSTR. AIR DRIER ASSEMBLY
Pure Air
DRG NO. 00-9-6992-55.10
SHEET 13
MODULE REF. F6992A13
REV 1

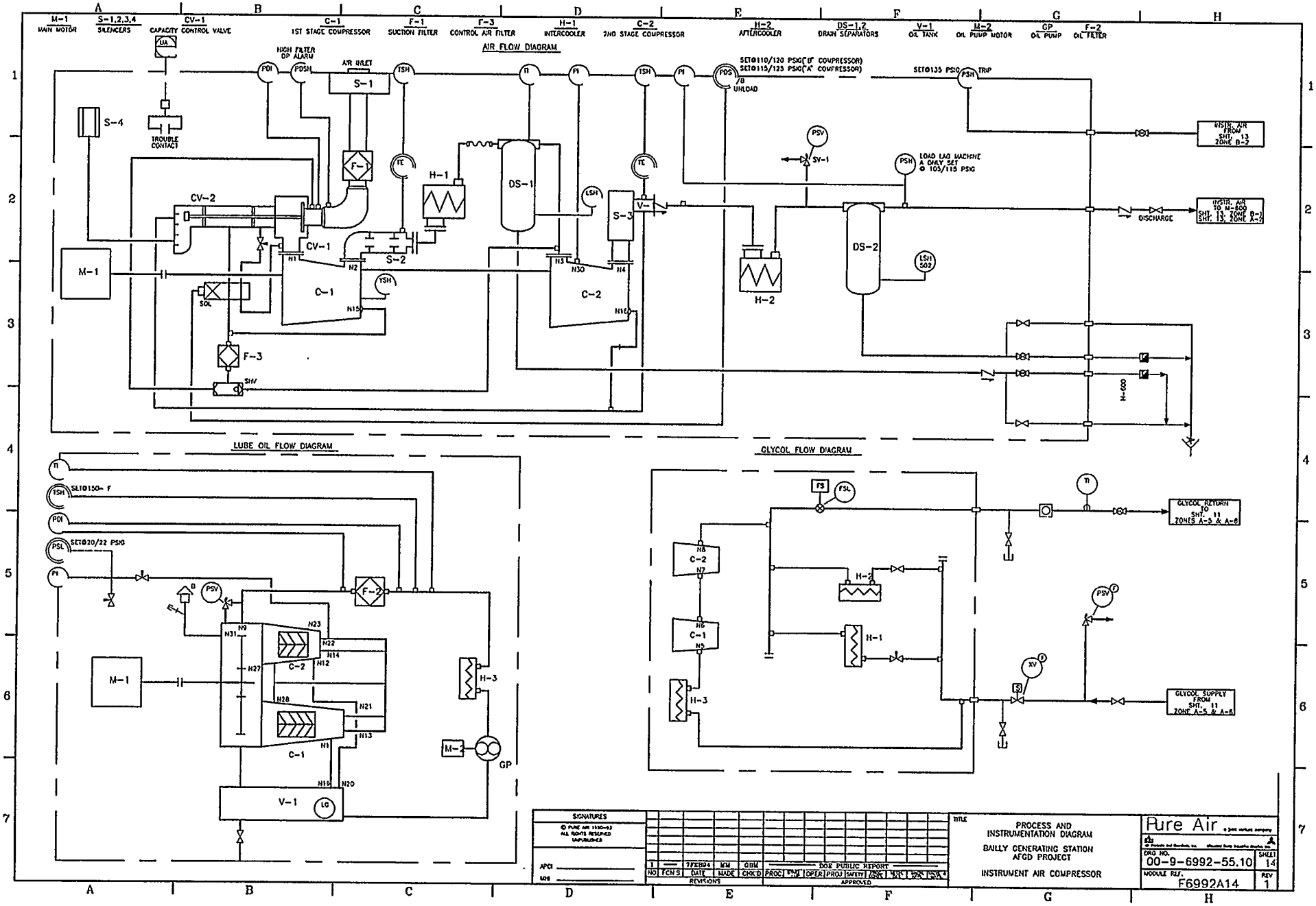
M-1 MAIN MOTOR
S-1,2,3,4 SILENCERS
CV-1 CAPACITY CONTROL VALVE
C-1 1ST STAGE COMPRESSOR
F-1 SUCTION FILTER
F-3 CONTROL AIR FILTER
H-1 INTERCOOLER
C-2 2ND STAGE COMPRESSOR
H-2 AFTERCOOLER
DS-1,2 DRAIN SEPARATORS
V-1 OIL TANK
M-2 OIL PUMP MOTOR
GP OIL PUMP
F-2 OIL FILTER
AIR FLOW DIAGRAM
HIGH FILTER DP ALARM
AIR INLET
SET@110/120 PSIG("B" COMPRESSOR)
SET@115/125 PSIG("A" COMPRESSOR)
UNLOAD
SET@135 PSIG
TRIP
LOAD LAG MACHINE A ONLY SET @ 105/115 PSIG
DISCHARGE
TROUBLE CONTACT
LUBE OIL FLOW DIAGRAM
SET@150~ F
SET@20/22 PSIG
GLYCOL FLOW DIAGRAM
GLYCOL RETURN TO SHT. 11 ZONES A-5 & A-6
GLYCOL SUPPLY FROM SHT. 11 ZONE A-5 & A-6
SIGNATURES
DOE PUBLIC REPORT
REVISIONS
APPROVED
TITLE
PROCESS AND INSTRUMENTATION DIAGRAM
BAILLY GENERATING STATION AFGD PROJECT
INSTRUMENT AIR COMPRESSOR
Pure Air
DRG NO. 00-9-6992-55.10
SHEET 14
MODULE REF. F6992A14
REV 1

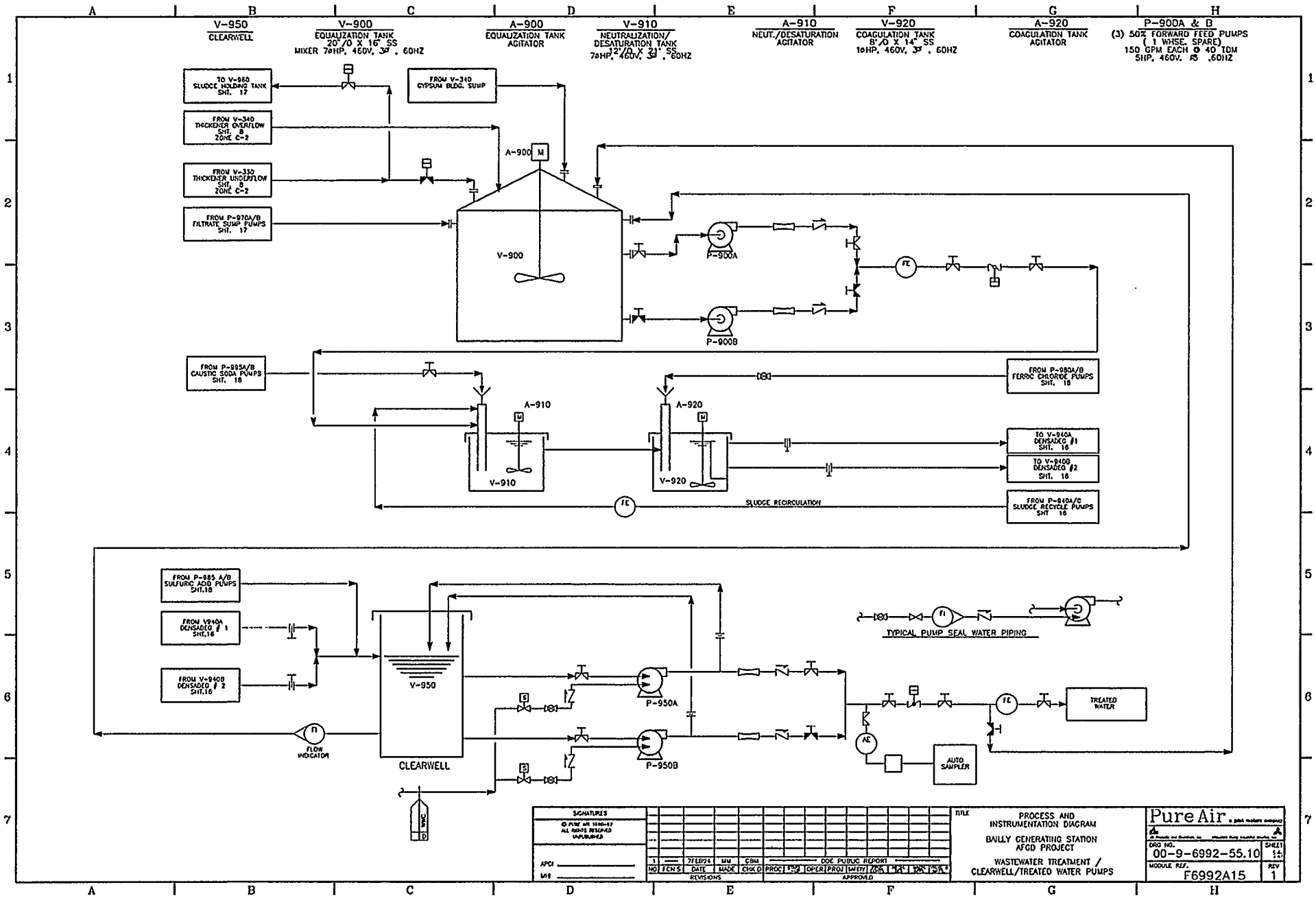
V-950
CLEARWELL
V-900
EQUALIZATION TANK
20"/0 X 16" SS
MIXER 7ØHP, 460V, 3Ø, 60HZ
A-900
EQUALIZATION TANK
AGITATOR
V-910
NEUTRALIZATION/
DESATURATION TANK
12'/0 X 21' SS
7ØHP, 460V, 3Ø, 60HZ
A-910
NEUT./DESATURATION
AGITATOR
V-920
COAGULATION TANK
8'/0 X 14" SS
1ØHP, 460V, 3Ø, 60HZ
A-920
COAGULATION TANK
AGITATOR
P-900A & B
(3) 50% FORWARD FEED PUMPS
(1 WHSE. SPARE)
150 GPM EACH @ 40 TDM
5HP, 460V, Ø, 60HZ
TO V-960 SLUDGE HOLDING TANK SHT. 17
FROM V-340 THICKENER OVERFLOW SHT. 8 ZONE C-2
FROM V-330 THICKENER UNDERFLOW SHT. 8 ZONE C-2
FROM P-970A/B FILTRATE SUMP PUMPS SHT. 17
FROM V-340 GYPSUM BLDG. SUMP
A-900
V-900
P-900A
P-900B
FE
FROM P-995A/B CAUSTIC SODA PUMPS SHT. 18
FROM P-980A/B FERRIC CHLORIDE PUMPS SHT. 18
A-910
A-920
V-910
V-920
TO V-940A DENSADEG #1 SHT. 16
TO V-940B DENSADEG #2 SHT. 16
FROM P-940A/C SLUDGE RECYCLE PUMPS SHT 16
SLUDGE RECIRCULATION
FROM P-985 A/B SULFURIC ACID PUMPS SHT.18
FROM V940A DENSADEG # 1 SHT.16
FROM V-940B DENSADEG # 2 SHT.16
V-950
CLEARWELL
FLOW INDICATOR
P-950A
P-950B
TYPICAL PUMP SEAL WATER PIPING
TREATED WATER
AUTO SAMPLER
SIGNATURES
APCI
MH
1 7FEB94 MM CBM
NO FCN S DATE MADE CHK'D
REVISIONS
DOE PUBLIC REPORT
PROC OPER PROJ SAFETY
APPROVED
TITLE
PROCESS AND INSTRUMENTATION DIAGRAM
BAILLY GENERATING STATION
AFGD PROJECT
WASTEWATER TREATMENT / CLEARWELL/TREATED WATER PUMPS
Pure Air
DRG NO. 00-9-6992-55.10
SHEET
MODULE REF. F6992A15
REV 1

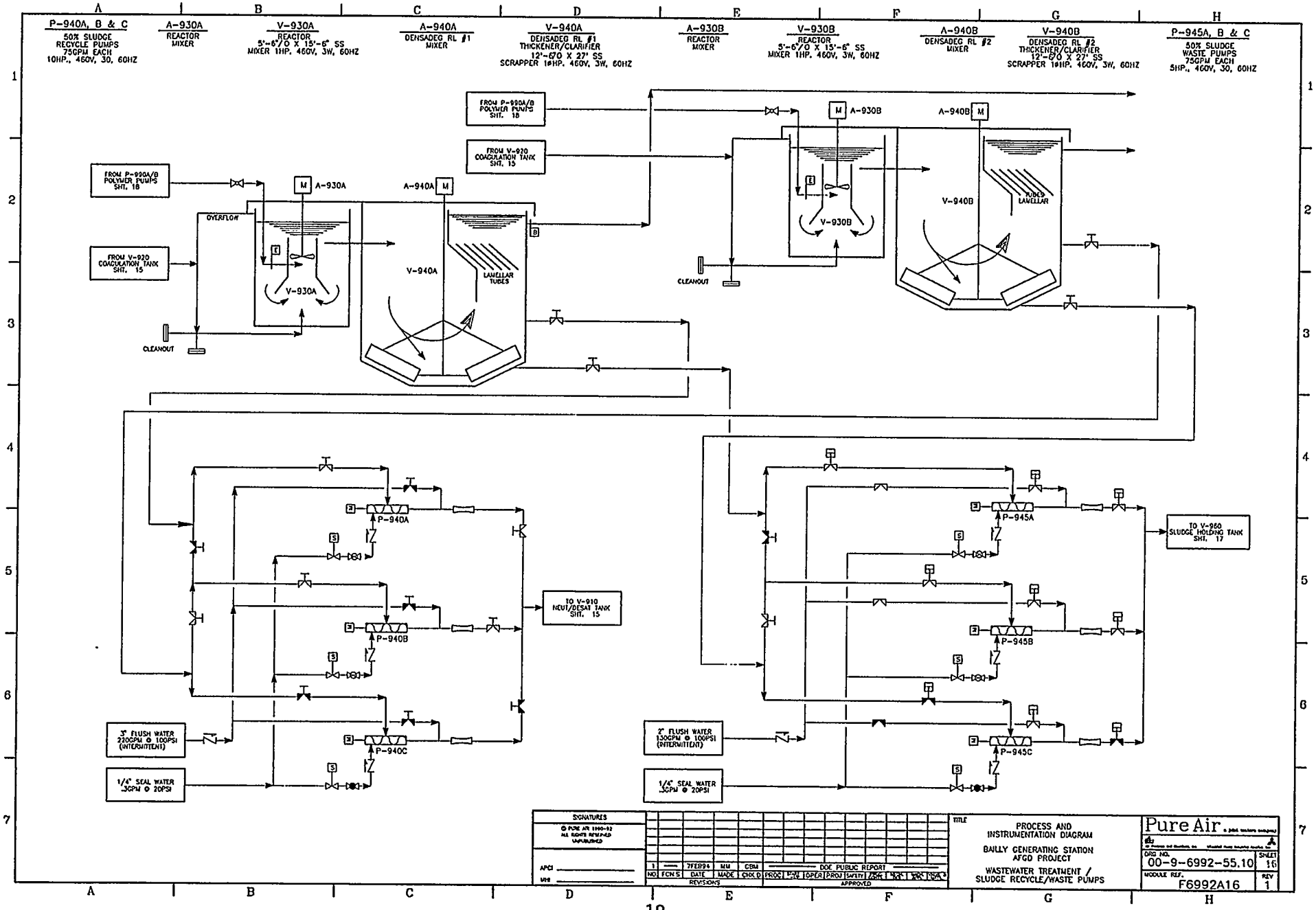
P-940A, B & C
50% SLUDGE RECYCLE PUMPS 75GPM EACH 10HP., 460V, 30, 60HZ
A-930A
REACTOR MIXER
V-930A
REACTOR 5'-6"/0 X 15'-6" SS MIXER 1HP. 460V, 3W, 60HZ
A-940A
DENSADEG RL #1 MIXER
V-940A
DENSADEG RL #1 THICKENER/CLARIFIER 12'-6"/0 X 27' SS SCRAPPER 1ØHP. 460V, 3W, 60HZ
A-930B
REACTOR MIXER
V-930B
REACTOR 5'-6"/0 X 15'-6" SS MIXER 1HP. 460V, 3W, 60HZ
A-940B
DENSADEG RL #2 MIXER
V-940B
DENSADEG RL #2 THICKENER/CLARIFIER 12'-6"/0 X 27' SS SCRAPPER 1ØHP. 460V, 3W, 60HZ
P-945A, B & C
50% SLUDGE WASTE PUMPS 75GPM EACH 5HP., 460V, 30, 60HZ
FROM P-990A/B POLYMER PUMPS SHT. 18
FROM V-920 COAGULATION TANK SHT. 15
OVERFLOW
CLEANOUT
LAMELLAR TUBES
TUBES LAMELLAR
TO V-910 NEUT/DESAT TANK SHT. 15
TO V-960 SLUDGE HOLDING TANK SHT. 17
3" FLUSH WATER 220GPM @ 100PSI (INTERMITTENT)
1/4" SEAL WATER .3GPM @ 20PSI
2" FLUSH WATER 130GPM @ 100PSI (INTERMITTENT)
SIGNATURES
APCI
MHI
NO. FCN S DATE MADE CHK'D
REVISIONS
DOE PUBLIC REPORT
APPROVED
TITLE
PROCESS AND INSTRUMENTATION DIAGRAM
BAILLY GENERATING STATION AFGO PROJECT
WASTEWATER TREATMENT / SLUDGE RECYCLE/WASTE PUMPS
Pure Air
DRG NO. 00-9-6992-55.10
SHEET 16
MODULE REF. F6992A16
REV 1

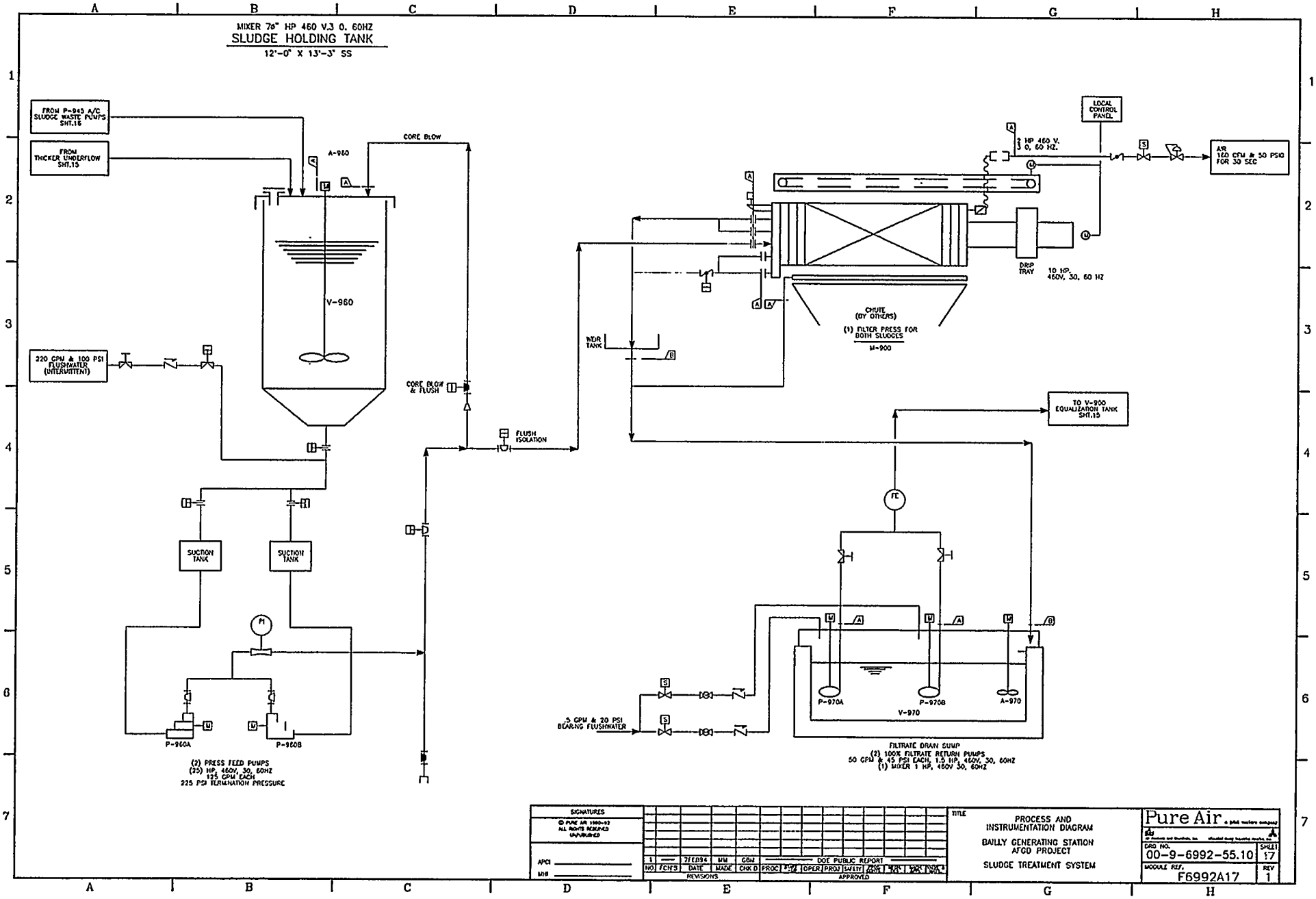
MIXER 7ø" HP 460 V.3 0. 60HZ
SLUDGE HOLDING TANK
12'-0" X 13'-3" SS
FROM P-945 A/C SLUDGE WASTE PUMPS SHT.16
FROM THICKER UNDERFLOW SHT.15
A-960
CORE BLOW
V-960
220 GPM & 100 PSI FLUSHWATER (INTERMITTENT)
CORE BLOW & FLUSH
FLUSH ISOLATION
WEIR TANK
LOCAL CONTROL PANEL
2 HP 460 V. 3 0. 60 HZ.
AIR 160 CFM & 50 PSIG FOR 30 SEC
DRIP TRAY
10 HP. 460V, 30, 60 HZ
CHUTE (BY OTHERS)
(1) FILTER PRESS FOR BOTH SLUDGES
M-900
TO V-900 EQUALIZATION TANK SHT.15
SUCTION TANK
SUCTION TANK
P-960A
P-960B
(2) PRESS FEED PUMPS
(25) HP, 460V, 30, 60HZ
125 GPM EACH
225 PSI TERMINATION PRESSURE
.5 GPM & 20 PSI BEARING FLUSHWATER
P-970A
P-970B
A-970
V-970
FILTRATE DRAIN SUMP
(2) 100% FILTRATE RETURN PUMPS
50 GPM & 45 PSI EACH, 1.5 HP, 460V, 30, 60HZ
(1) MIXER 1 HP, 460V 30, 60HZ
SIGNATURES
APCI
MHI
1 — 7FEB94 MM GBM
NO FCN'S DATE MADE CHK'D
REVISIONS
DOE PUBLIC REPORT
PROC OPER PROJ SAFETY
APPROVED
TITLE
PROCESS AND INSTRUMENTATION DIAGRAM
BAILLY GENERATING STATION
AFGD PROJECT
SLUDGE TREATMENT SYSTEM
Pure Air
DRG NO. 00-9-6992-55.10
SHEET 17
MODULE REF. F6992A17
REV 1

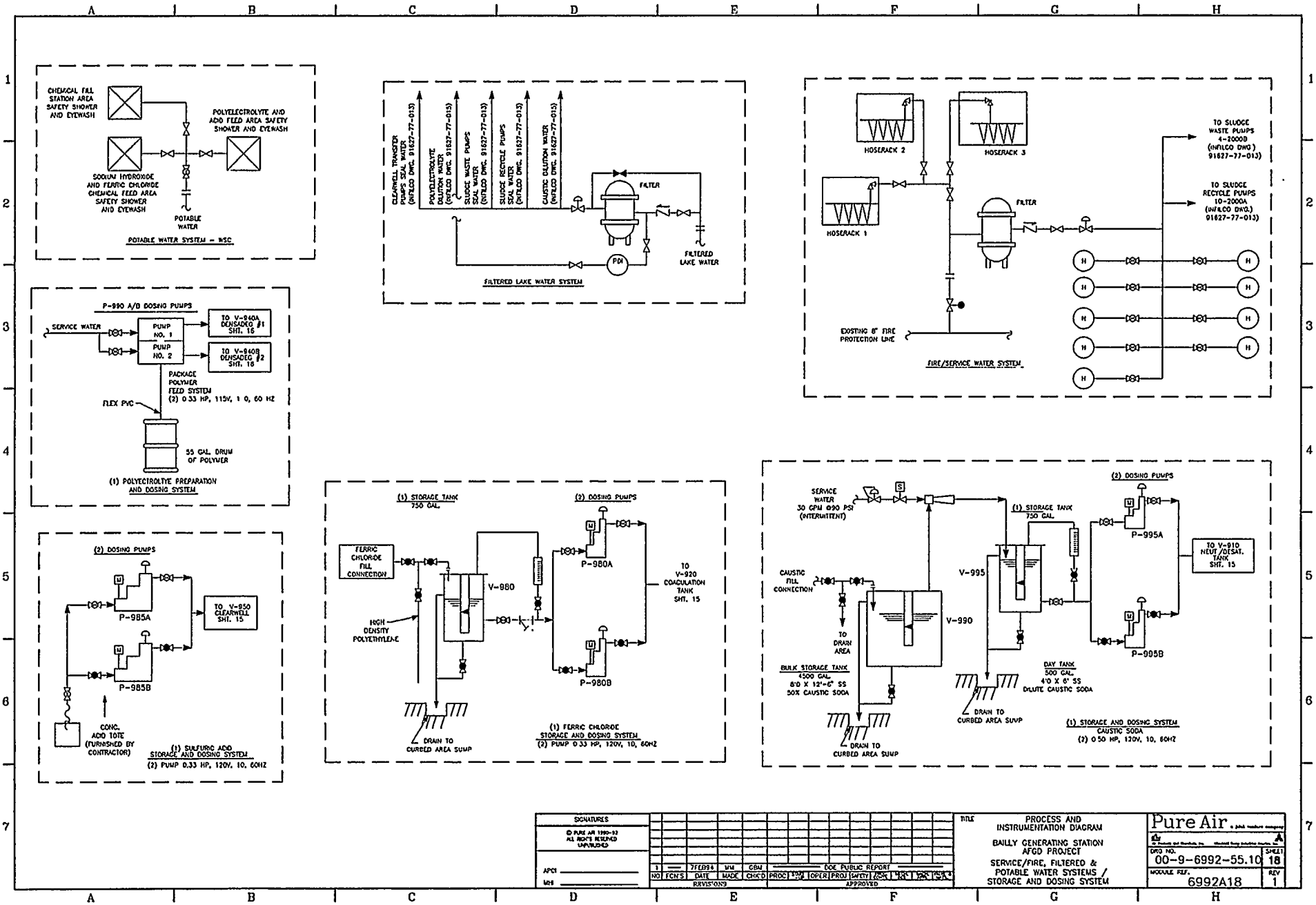
CHEMICAL FILL STATION AREA SAFETY SHOWER AND EYEWASH
POLYELECTROLYTE AND ACID FEED AREA SAFETY SHOWER AND EYEWASH
SODIUM HYDROXIDE AND FERRIC CHLORIDE CHEMICAL FEED AREA SAFETY SHOWER AND EYEWASH
POTABLE WATER
POTABLE WATER SYSTEM – WSC
CLEARWELL TRANSFER PUMPS SEAL WATER (INFILCO DWG. 91627-77-013)
POLYELECTROLYTE DILUTION WATER (INFILCO DWG. 91627-77-015)
SLUDGE WASTE PUMPS SEAL WATER (INFILCO DWG. 91627-77-013)
SLUDGE RECYCLE PUMPS SEAL WATER (INFILCO DWG. 91627-77-013)
CAUSTIC DILUTION WATER (INFILCO DWG. 91627-77-015)
FILTER
PDI
FILTERED LAKE WATER
FILTERED LAKE WATER SYSTEM
HOSERACK 2
HOSERACK 3
HOSERACK 1
FILTER
TO SLUDGE WASTE PUMPS 4-2000B (INFILCO DWG.) 91627-77-013)
TO SLUDGE RECYCLE PUMPS 10-2000A (INFILCO DWG.) 91627-77-013)
EXISTING 8" FIRE PROTECTION LINE
FIRE/SERVICE WATER SYSTEM
P-990 A/B DOSING PUMPS
SERVICE WATER
PUMP NO. 1
PUMP NO. 2
TO V-940A DENSADEG #1 SHT. 16
TO V-940B DENSADEG #2 SHT. 16
PACKAGE POLYMER FEED SYSTEM (2) 0.33 HP, 115V, 1 0, 60 HZ
FLEX PVC
55 GAL. DRUM OF POLYMER
(1) POLYECTROLYTE PREPARATION AND DOSING SYSTEM
(2) DOSING PUMPS
P-985A
P-985B
TO V-950 CLEARWELL SHT. 15
CONC. ACID TOTE (FURNISHED BY CONTRACTOR)
(1) SULFURIC ACID STORAGE AND DOSING SYSTEM
(2) PUMP 0.33 HP, 120V, 10, 60HZ
(1) STORAGE TANK 750 GAL.
(2) DOSING PUMPS
FERRIC CHLORIDE FILL CONNECTION
V-980
HIGH DENSITY POLYETHYLENE
P-980A
P-980B
TO V-920 COAGULATION TANK SHT. 15
DRAIN TO CURBED AREA SUMP
(1) FERRIC CHLORIDE STORAGE AND DOSING SYSTEM
(2) PUMP 0.33 HP, 120V, 10, 60HZ
SERVICE WATER 30 GPM @90 PSI (INTERMITTENT)
(1) STORAGE TANK 750 GAL.
(2) DOSING PUMPS
P-995A
P-995B
TO V-910 NEUT./DESAT. TANK SHT. 15
CAUSTIC FILL CONNECTION
V-995
V-990
TO DRAIN AREA
BULK STORAGE TANK 4500 GAL. 8'0 X 12'-6" SS 50% CAUSTIC SODA
DAY TANK 500 GAL. 4'0 X 6' SS DILUTE CAUSTIC SODA
DRAIN TO CURBED AREA SUMP
DRAIN TO CURBED AREA SUMP
(1) STORAGE AND DOSING SYSTEM CAUSTIC SODA
(2) 0.50 HP, 120V, 10, 60HZ
SIGNATURES
© PURE AIR 1990-92 ALL RIGHTS RESERVED UNPUBLISHED
APCI
MHI
1 — 7FEB94 MM GBM
NO FCN'S DATE MADE CHK'D
REVISIONS
DOE PUBLIC REPORT
PROC OPER PROJ SAFETY
APPROVED
TITLE
PROCESS AND INSTRUMENTATION DIAGRAM
BAILLY GENERATING STATION AFGD PROJECT
SERVICE/FIRE, FILTERED & POTABLE WATER SYSTEMS / STORAGE AND DOSING SYSTEM
Pure Air
DRG NO. 00-9-6992-55.10
SHEET 18
MODULE REF. 6992A18
REV 1

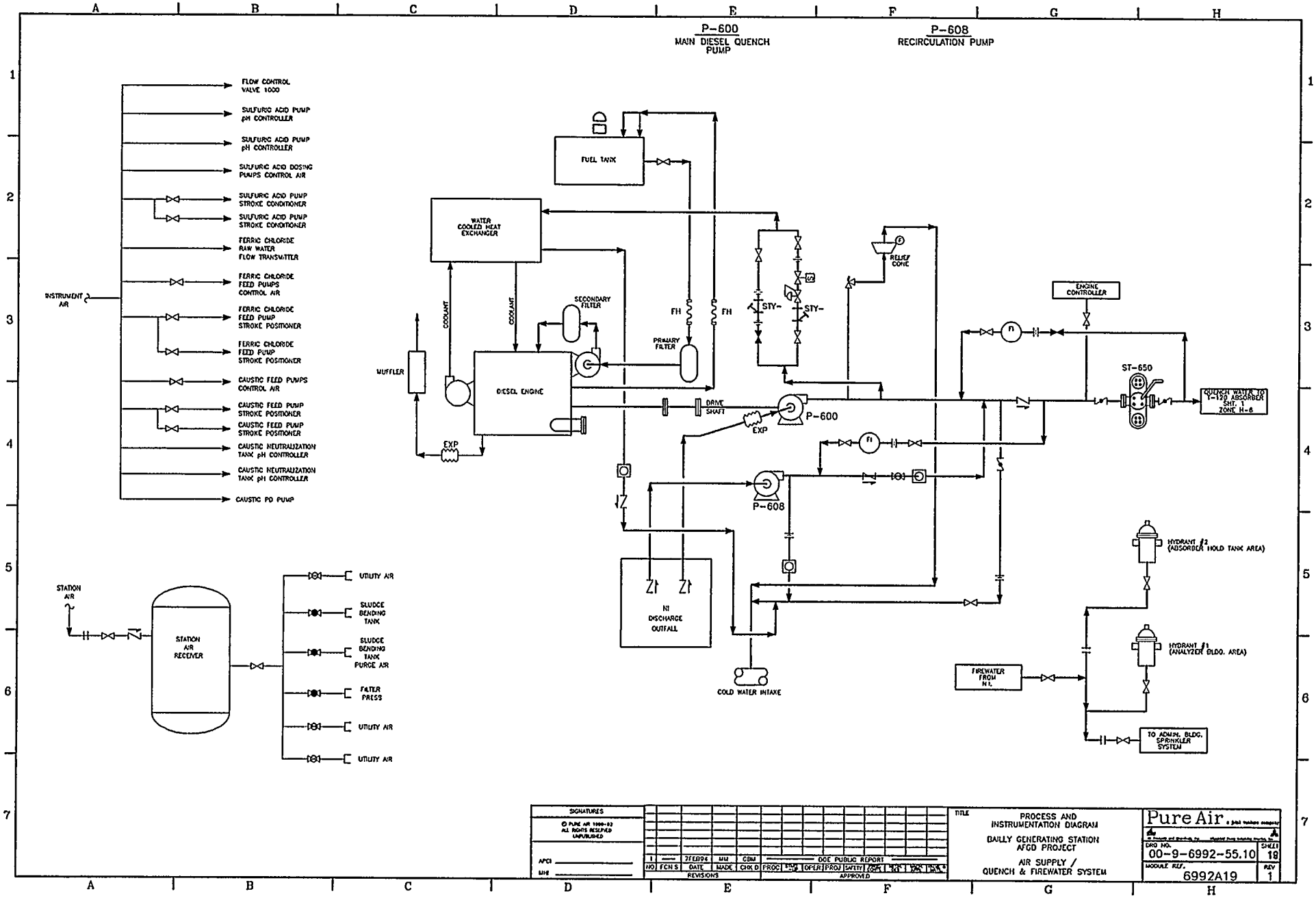
P-600
MAIN DIESEL QUENCH PUMP
P-608
RECIRCULATION PUMP
FLOW CONTROL VALVE 1000
SULFURIC ACID PUMP pH CONTROLLER
SULFURIC ACID PUMP pH CONTROLLER
SULFURIC ACID DOSING PUMPS CONTROL AIR
SULFURIC ACID PUMP STROKE CONDITIONER
SULFURIC ACID PUMP STROKE CONDITIONER
FERRIC CHLORIDE RAW WATER FLOW TRANSMITTER
FERRIC CHLORIDE FEED PUMPS CONTROL AIR
FERRIC CHLORIDE FEED PUMP STROKE POSITIONER
FERRIC CHLORIDE FEED PUMP STROKE POSITIONER
CAUSTIC FEED PUMPS CONTROL AIR
CAUSTIC FEED PUMP STROKE POSITIONER
CAUSTIC FEED PUMP STROKE POSITIONER
CAUSTIC NEUTRALIZATION TANK pH CONTROLLER
CAUSTIC NEUTRALIZATION TANK pH CONTROLLER
CAUSTIC PD PUMP
INSTRUMENT AIR
FUEL TANK
WATER COOLED HEAT EXCHANGER
COOLANT
COOLANT
SECONDARY FILTER
PRIMARY FILTER
FH
FH
STY-
STY-
RELIEF CONE
ENGINE CONTROLLER
MUFFLER
DIESEL ENGINE
DRIVE SHAFT
EXP
EXP
P-600
P-608
ST-650
QUENCH WATER TO T-120 ABSORBER SHT. 1 ZONE H-6
HYDRANT #2 (ABSORBER HOLD TANK AREA)
HYDRANT #1 (ANALYZER BLDG. AREA)
FIREWATER FROM N.I.
TO ADMIN. BLDG. SPRINKLER SYSTEM
N.I. DISCHARGE OUTFALL
COLD WATER INTAKE
STATION AIR
STATION AIR RECEIVER
UTILITY AIR
SLUDGE BENDING TANK
SLUDGE BENDING TANK PURGE AIR
FILTER PRESS
UTILITY AIR
UTILITY AIR
SIGNATURES
© PURE AIR 1990-92 ALL RIGHTS RESERVED UNPUBLISHED
APCI
MHI
1 — 7FEB94 MM CBM
NO FCN S DATE MADE CHK D
REVISIONS
DOE PUBLIC REPORT
PROC OPER PROJ SAFETY
APPROVED
TITLE
PROCESS AND INSTRUMENTATION DIAGRAM
BAILLY GENERATING STATION AFGD PROJECT
AIR SUPPLY / QUENCH & FIREWATER SYSTEM
Pure Air
DRG NO. 00-9-6992-55.10
SHEET 19
MODULE REF. 6992A19
REV 1

APPENDIX B
REVISED EQUIPMENT LIST

Appendix B Revised Equipment List

ITEM #	NAME	IN USE	SPARE	CAPACITY	DESIGN CHARACTERISTICS	MATERIAL OF CONSTRUCTION	VENDOR
A-120	Air Rotary Sparger	3	0	5875 scfm 500hp	diameter = 16.3' speed= 36 rpm	Carbon steel with rubber lining	LIGHTNIN
A-130	Neutralization Agitator	2	0	20 hp	diameter = 72" speed= 54 rpm	Carbon steel with rubber lining	LIGHTNIN
A-140	Oxidation Agitator	2	0	10 hp	diameter = 100" speed= 30.7 rpm	Carbon steel with rubber lining	LIGHTNIN
A-320	Filtrate Sump Agitator	1	0	2 hp	diameter = 90" speed= 37.6 rpm	Carbon steel with rubber lining	LIGHTNIN
A-330	Filtrate Thickener Rake	1	0	2 hp	diameter = 43' speed= .15 rpm	Carbon steel with rubber lining	LIGHTNIN
A-340	Overflow Tank Agitator	1	0	1.5 hp	diameter = 56" speed= 56 rpm	Carbon steel with rubber lining	LIGHTNIN
A-370	Centrifuge Feed Tank Agitator	1	0	1.5 hp	diameter = 56" speed= 68 rpm	Carbon steel with rubber lining	LIGHTNIN
A-700	Absorber Sump Agitator	1	0	3 hp	diameter = 58" speed= 56 rpm	Carbon steel with rubber lining	LIGHTNIN
A-710	Absorber Hold Tank Agitator	1	0	50 hp	diameter = 200" speed= 16.6 rpm	Carbon steel with rubber lining	LIGHTNIN
A-720	Thickener Sump Agitator	1	0	2 hp	diameter = 200" speed= 16.6 rpm	Carbon steel with rubber lining	LIGHTNIN
A-730	Absorber Hold Tank Agitator	1	0	2 hp	diameter = 44" speed= 68 rpm	Carbon steel with rubber lining	LIGHTNIN
A-810	Hydrated Lime Injection Tank Agitator	2	0	2 hp	diameter = 34" speed= 100 rpm	Carbon steel with rubber lining	LIGHTNIN
A-900	Equalization Tank Agitator	1	0	7.5 hp	diameter = 54" speed= 50 rpm	Carbon steel with rubber lining	EKATO
A-910	Neutralization Tank Agitator	1	0	7.5 hp	diameter = 48" speed= 45 rpm	Carbon steel with rubber lining	EKATO
A-920	Coagulation Tank Agitator	1	0	1.5 hp	diameter = 32" speed= 39 rpm	Carbon steel with rubber lining	EKATO
A-930	Reaction Tank Agitator	1	0	1 hp	diameter = 32" speed= 39 rpm	Carbon steel with rubber lining	EKATO
A-940	Sludge Tank Rake	2	0	1.5 hp	diameter = 12' speed= .2 rpm	Carbon steel with rubber lining	EKATO
A-960	Sludge Tank Mixer	1	0	7.5 hp	diameter = 48" speed= 53 rpm	Carbon steel with rubber lining	EKATO
A-970	Filtrate Sump Agitator	1	0	1.5 hp	diameter = 48" speed= 68 rpm	Carbon steel with rubber lining	EKATO

Appendix B Revised Equipment List

ITEM #	NAME	IN USE	SPARE	CAPACITY	DESIGN CHARACTERISTICS	MATERIAL OF CONSTRUCTION	VENDOR
B-110	Process Air Blower	2	0	10500 scfm @ 12.7 psig	800 HP Centrifugal	Carbon steel	INGERSOL RAND
B-510	Limestone Transfer Compressor	2	0	562 scfm @ 35 psig	125 HP Centrifugal	Carbon steel	AERZEN
B-520	Limestone Unloading Blower	3	0	120 scfm @ 15 psig	125 HP Centrifugal	Carbon steel	ROOTS
B-810	Hydrated Lime Transfer Blowers	3	0	307 scfm @ 10 psig	20 HP Centrifugal	Steel	ROOTS
C-310	Belt Conveyor	2	0	200 ton / hr	10HP length= 85' or 79'	Steel with rubber belt	R&S Co.
C-311	Belt Conveyor	1	0	200 ton / hr	30 hp length= 410'	Steel with rubber belt	R&S Co.
C-312	Belt Conveyor	1	0	200 ton / hr	7.5 HP length= 98'	Steel with rubber belt	ANDCO
C-313	Belt Conveyor	1	0	200 ton / hr	7.5 HP length= 96'	Steel with rubber belt	ANDCO
E-120	Mist Eliminator	1	0	7950 gpm	2 primary stages 90* cone spray	GE Noryl EN 212-780 plastic	CRESCENT
H-610	Cooling Water Coolers	2	0	150psig	Counter-current Tube and shell	Steel	BASCO
K-600	Instrument Air Compressor	1	1	50scfm	132 HP Two Stage screw	Steel	KOBELCO
M-300	Centrifuge	8	1	35.3 ft3	200HP Vertical basket	Carbon steel with rubber lining	K-M
M-500	Silo Rotary Feeder	1	1	38 ton / hr	5 HP 18" rotary unit	Steel	J.R. BLOCKINGER
M-530	Screw Pump	1	1	38 ton / hr	75 HP	Steel	IBAU
M-600	Instrument Air Dryer	1	1	50 scfm	Heatless Self-regenerating	Steel	ZURN
M-800	Lime Feeder	1	0	8 ton / hr	2 HP 12" Rotary unit	Steel	J.R. BLOCKINGER
M-900	Filter Press	1	0	20 ton (dry)	area= 4167 ft2 pressure= 100 psig	Carbon steel with rubber lining	R&B
P-120	Recirculation Pump	11	1	22000 gpm	500 HP Horizontal Centrifugal	Carbon steel with rubber lining	WARMAN
P-125	Absorber Bleed Pump	2	0	1760 gpm	60 HP Horizontal Centrifugal	Carbon steel with rubber lining	BGA

Appendix B Revised Equipment List

ITEM #	NAME	IN USE	SPARE	CAPACITY	DESIGN CHARACTERISTICS	MATERIAL OF CONSTRUCTION	VENDOR
P-320	Filtrate Sump Pump	2	0	1350 gpm	150 HP Vertical Centrifugal	Carbon steel with rubber lining	BGA
P-330 A	Underflow Pump	1	0	97 gpm	7.5 HP Horizontal Centrifugal	Carbon steel with rubber lining	BGA
P-330 B	Underflow Pump	1	0	140 gpm	10 HP Horizontal Centrifugal	Carbon steel with rubber lining	BGA
P-340	Overflow Pump	2	0	1625 gpm	125 HP Horizontal Centrifugal	Carbon steel with rubber lining	BGA
P-350	WES Pump	1	0	120 gpm	10 HP Horizontal Centrifugal	Carbon steel with rubber lining	SULZER
P-370	Centrifuge Feed Pump	2	0	2100 gpm	60 HP Horizontal Centrifugal	Carbon steel with rubber lining	BGA
P-600	Quench Pump	1	0	4500 gpm	460 HP Horizontal Centrifugal	Steel	PEERLESS
P-610	Cooling Water Pump	1	1	200 gpm	10 HP Horizontal Centrifugal	Steel	GOULDS
P-630	Conveyor Tunnel Sump Pump	1	0	40 gpm	5 HP Horizontal Centrifugal	Carbon steel with rubber lining	BGA
P-700	Absorber Sump Pump	2	0	1180 gpm	60 HP Vertical Cantilever	Carbon steel with rubber lining	BGA
P-710	Absorber Hold Tank Pump	1	0	1090 gpm	40 HP Horizontal Centrifugal	Carbon steel with rubber lining	BGA
P-720	Thickener Sump Pump	1	0	135 gpm	60 HP Vertical Cantilever	Carbon steel with rubber lining	BGA
P-730	Absorber Hold Tank Pump	1	0	90 gpm	5 HP Horizontal Centrifugal	Carbon steel with rubber lining	BGA
P-811	Neutralization Pumps	2	0	32 gpm	20 HP Horizontal Centrifugal	Carbon steel with rubber lining	GOULDS
P-900	Underflow Feed Pump	2	0	150 gpm	5 HP Horizontal Centrifugal	Carbon steel with rubber lining	BGA
P-940	Sludge Recycle Pump	3	0	75 gpm	10 HP Air Diaphragm	Carbon steel with rubber lining	SEEPX
P-945	Sludge Water Pump	3	0	50 gpm	10 HP Air Diaphragm	Carbon steel with rubber lining	SEEPX
P-950	Treated Water Pump	2	0	125 gpm	125 HP Horizontal Centrifugal	Carbon steel with rubber lining	BGA
P-960	Filter Press Feed Pump	2	0	125 gpm	25 HP Reciprocating	Carbon steel with rubber lining	ABEL

Appendix B Revised Equipment List

ITEM #	NAME	IN USE	SPARE	CAPACITY	DESIGN CHARACTERISTICS	MATERIAL OF CONSTRUCTION	VENDOR
P-970	Filtrate Sump Pump	2	0	50 gpm	1.5 HP Vertical Centrifugal	Carbon steel with rubber lining	BGA
P-990	Polymer Dosing Pump	2	0	1 gpm	0.5 HP Reciprocating	Steel	STRANCO
T-120	Absorber Tank	1	0	1138000 gal	Cocurrent tower with grid packing	Carbon steel with vinyl ester resin lining	
V-300	Centrifuge Head Tank	1	0	845 gal	height= 9' diameter= 2'	Carbon steel with rubber lining	
V-320	Filtrate Sump	1	0	103302 gal	29' x 29' x 16' 5"	Concrete with vinyl ester resin lining	
V-330	Filtrate Thickener	1	0	106822 gal	height= 13' 3" diameter = 43' 4"	Carbon steel with vinyl ester resin lining	
V-340	Thickener Overflow Tank	1	0	30911 gal	height= 13' 3" diameter = 19' 11"	Carbon steel with vinyl ester resin lining	
V-370	Centrifuge Feed Tank	1	0	23381 gal	height= 13' 3" diameter = 17' 4"	Mild steel with vinyl ester resin lining	
V-500	Limestone Silo	2	0	306701 gal	height= 88' diameter = 30'	Concrete	
V-600	Instrument Air Surge Vessel	1	0	7929 gal	height= 11' diameter = 5' 6"	Steel	
V-610	Cooling Water Expansion Tank	1	0	147 gal	height= 48" diameter = 30"	Steel	
V-700	Absorber Sump	1	0	29000 gal	15' 5" x 15' 5" x 15' 5"	Concrete with vinyl ester resin lining	
V-710	Absorber Hold Tank	1	0	820000 gal	height= 49' diameter = 55'	Carbon steel with vinyl ester resin lining	
V-720	Thickener Sump	1	0	105680 gal	29' 4" x 29' 4" x 16' 5"	Concrete with vinyl ester resin lining	
V-730	Absorber Hold Tank Sump	1	0	3825 gal	8' x 8' x 7'	Concrete with vinyl ester resin lining	
V-800	Hydrated Lime Silo	1	0	40395 gal	height= 65' diameter = 14'	Carbon Steel	
V-810	Hydrated Lime Injection Tanks	2	0	4338 gal	height= 144" diameter = 93"	Fiberglass	
V-900	Equalization Tank	1	0	33600 gal	height= 16' diameter = 20'	Carbon steel with rubber lining	
V-910	Neutralization Tank	1	0	16000gal	height= 21' diameter = 12'	Carbon steel with rubber lining	

Appendix B Revised Equipment List

ITEM #	NAME	IN USE	SPARE	CAPACITY	DESIGN CHARACTERISTICS	MATERIAL OF CONSTRUCTION	VENDOR
V-920	Coagulation Tank	1	0	4500 gal	height= 14' diameter = 8'	Carbon steel with rubber lining	
V-930	Reactor	2	0	1350 gal	height= 5' 6" diameter = 15' 6"	Carbon steel with rubber lining	
V-940	Clarifier	2	0	25600 gal	height= 27' diameter = 12' 6"	Carbon steel with rubber lining	
V-950	Clearwell	1	0	2500 gal	height= 28' diameter = 4'	Carbon steel with rubber lining	
V-960	Sludge Holding Tank	1	0	7481 gal	height= 13' 3" diameter = 12'	Carbon steel with rubber lining	
V-970	Filtrate Drain Sump	1	0	5984 gal	10' x 10' x 8'	Concrete with vinyl ester resin lining	
V-980	Ferric Chloride Tank	1	0	1268 gal	height= 6' diameter = 6'	Carbon steel with rubber lining	
V-990	Sodium Hydroxide Tank	1	0	4500 gal	height= 12' 6" diameter = 8'	Carbon steel with rubber lining	
V-995	Sodium Hydroxide Tank	1	0	500 gal	height= 6' diameter = 4'	Carbon steel with rubber lining	

APPENDIX C
OPERATING PROCEDURES FOR DEMONSTRATION UNIT

The operating procedures for the Demonstration is provided under a separate cover title. The table of contents has been provided as a aid. This operating manual contains: equipment descriptions, process descriptions, design basis and operating procedures including start-up, shutdown, and normal operation as well as some troubleshooting guidelines for the operation of the Advanced Flue Gas Desulfurization plant for boiler Unit 7 and 8 at the NIPSCO Bailly Generating Facility.

BAILLY 600 MW

ADVANCED FLUE GAS DESULFURIZATION FACILITY

OPERATING MANUAL

W3720aWCA

BAILLY 600 MW AFGD OPERATING MANUAL

TABLE OF CONTENTS

		Page
1.	INTRODUCTION	1
2.	DESIGN BASIS	2
2.1	Summary of Key Design Parameters	2
2.2	Feed Gas to FGD Plant	3
2.3	Process Gas to Customer	5
2.4	Gypsum Specification	5
2.5	Water Supply Spec. (Boundary Limits)	6
2.6	Wastewater (Boundary Limits)	6
2.7	Power Supply	6
2.8	Limestone Supply	7
2.9	Coal Composition	7
3.	SYSTEM DESCRIPTION	9
3.1	System Division	9
3.2	Process Description	15
3.2.1	Section 100 Absorption Section	15
3.2.1.1	Flue Gas	15
3.2.1.2	Absorber and Ancillaries	16
3.2.1.3	Mist Eliminator	21
3.2.1.4	Equipment List	22
3.2.2	Section 300 Dewatering Section	26
3.2.2.1	Equipment List	31
3.2.3	Section 500 Limestone Feed System	36
3.2.3.1	Equipment List	43
3.2.4	Section 600	45
3.2.4.1	Process and Potable Water	45
3.2.4.2	Inhibited Cooling Water System	49
3.2.4.3	Instrument Air Compression and Supply System	49
3.2.4.4	Fire Protection System	49
3.2.4.5	Emergency Quenching System	51
3.2.4.6	Equipment List	51

BAILLY 600 MW AFGD OPERATING MANUAL

TABLE OF CONTENTS
(continued)

				Page
	3.2.5	Section 700 Sump Section		53
		3.2.5.1	Absorber Hold Tank/Absorber Hold Tank Sump	53
		3.2.5.2	Absorber Sump	53
		3.2.5.3	Thickener Sump	54
		3.2.5.4	Equipment List	54
	3.2.6	Section 800 Hydrated Lime Feed Section		57
		3.2.6.1	Equipment List	58
	3.2.7	Section 900 Wastewater Treatment Plant		67
		3.2.7.1	Equipment List	73
3.3	Control Systems and Procedures			80
	3.3.1	Equipment Operating Procedures		80
		3.3.1.1	P-120A/L Recirculating Pumps	80
		3.3.1.2	B-110A/D Oxidation Air Blowers	84
		3.3.1.3	A-120A/C Air Rotary Spargers	85
		3.3.1.4	P-330A/B Thickener Underflow Pumps	86
		3.3.1.5	P-700A/B Absorber Sump Pumps	90
		3.3.1.6	M-300A/I Centrifuges	90
		3.3.1.7	Limestone Unloading	93
		3.3.1.8	Limestone Transfer	94
		3.3.1.9	Hydrated Lime	94
			3.3.1.9.1 Hydrated Lime Recirculation	95
			3.3.1.9.2 Hydrated Lime Injection	95
		3.3.1.10	K-600A/B Instrument Air Compressor	95
		3.3.1.11	M-600A/B Instrument Air Driers	97
		3.3.1.12	V-600 Air Surge Vessel and Distribution System	98
	3.3.2	Analyzer Operation Sequence		98
	3.3.3	FGD Permissive Start		99
	3.3.4	FGD Emergency Plant Shutdown		108
	3.3.5	Plant Process Controls		109
		3.3.5.1	Sulfur Emission Control	109
		3.3.5.2	Absorber Liquid Level & Slurry Conc. Control	119
		3.3.5.3	Centrifuge Feed Tank Level Control	121
		3.3.5.4	Filtrate Sump Level Control	121
		3.3.5.5	Mist Eliminator & Wet/Dry Interface Washing	129

BAILLY 600 MW AFGD OPERATING MANUAL

TABLE OF CONTENTS
(continued)

			Page
		3.3.5.6 Air Sparger Washing Control	129
		3.3.5.7 Wastewater Evaporation System Control	129
		3.3.5.8 Wastewater Quantity Control	139
		3.3.5.9 Wastewater Treatment Plant	144
		3.3.5.9.1 Filter Press Operation	144
		3.3.5.10 Oxidation Air System Control	147
		3.3.5.11 Absorber & Thickener Sump Level Control	155
4.	**PLANT OPERATING PROCEDURES**		156
4.1	Operational Mode		156
4.2	Start-up Procedure		157
	4.2.1	Liquid Fill-up Operation	157
		4.2.1.1 Absorber Tank Fill-up	157
		4.2.1.2 Centrifuge Feed Tank Fill-up	159
		4.2.1.3 Filtrate Thickener Fill-up	159
		4.2.1.4 Thickener Overflow Tank Fill-up	160
		4.2.1.5 Filtrate Sump Fill-up	160
	4.2.2	Short Term Shutdown Mode Operation	160
		4.2.2.1 Pump Operation	160
		4.2.2.2 Limestone Storage & Feed System Operation	162
		4.2.2.3 Hydrated Lime Storage/Feed System Operation	162
		4.2.2.4 Analyzer Operation	162
	4.2.3	Gas Processing Operation Mode	163
		4.2.3.1 Preparation for Gas Processing	163
		4.2.3.2 Gas Processing	166
	4.2.4	Normal Operating Mode	169
4.3	Shutdown Procedure		170
	4.3.1	Shutdown to Short Term Shutdown Mode	170
		4.3.1.1 Cease of Gas Processing	170
		4.3.1.2 Equipment Shutdown	172
		4.3.1.3 Instrument Post Treatment	172
	4.3.2	Shutdown to Long Term Shutdown Mode	173
		4.3.2.1 Equipment Shutdown	173
		4.3.2.2 Tanks and Pipe Drainage	173

BAILLY 600 MW AFGD OPERATING MANUAL

TABLE OF CONTENTS
(continued)

				Page
	4.3.3	Shutdown to Plant Shutdown Mode		174
		4.3.3.1	Liquid Reduction Operating - Gas Processing	174
		4.3.3.2	Liquid Reduction Operation After Gas Processing	176
		4.3.3.3	Liquid Empty Operation	177
5.	**OPERATION AND TROUBLE SHOOTING**			190
5.1	Major Process Parameters Affecting Plant Performance			190
	5.1.1	FGD Inlet Flue Gas Condition		190
		5.1.1.1	Sulfur Content and Flue Gas Volume	190
		5.1.1.2	Chloride Content in Flue Gas	190
		5.1.1.3	Fly Ash Content in Flue Gas	191
		5.1.1.4	Moisture Content	191
	5.1.2	Absorber Recirculation Flow		191
	5.1.3	Unreacted Limestone Concentration in Slurry		192
	5.1.4	Limestone Composition and Particle Size		192
	5.1.5	Calcium Sulfite Concentration in Recirculating Slurry		192
	5.1.6	Chloride Concentration in the Recirculating Slurry		192
	5.1.7	Fly Ash Concentration in the Recirculating Slurry		193
5.2	Scale Prevention			193
	5.2.1	Mechanism of Scale Formation		193
		5.2.1.1	Soft Scale Formation	193
		5.2.1.2	Hard Scale Formation	194
	5.2.2	Method of Scale Prevention		194
		5.2.2.1	Soft Scale Prevention	194
		5.2.2.2	Hard Scale Prevention	195
5.3	Abnormal Operation			197
	5.3.1	Flue Gas Condition Abnormal		197
		5.3.1.1	Flue Gas Temperature Abnormal	197
		5.3.1.2	Flue Gas Flow Abnormal	197
		5.3.1.3	Sulfur Content Abnormal	198
		5.3.1.4	Fly Ash Content Abnormal	198
	5.3.2	Mechanical Upset		199
		5.3.2.1	Thickener Upset	199
		5.3.2.2	Dewatering System Upset	199

BAILLY 600 MW AFGD OPERATING MANUAL

TABLE OF CONTENTS
(continued)

				Page
		5.3.2.3	Wastewater Treatment Facility Upset	199
		5.3.2.4	Agitator Upset	200
		5.3.2.5	Air Rotary Sparger Upset	200
		5.3.2.6	Wet & Dry Interface Washing System Upset	200
		5.3.2.7	Mist Eliminator Washing System Upset	200
	5.3.3	Instrument Trouble		201
		5.3.3.1	pH Meter Upset	201
	5.3.4	Limestone Reactivity Upset		201
		5.3.4.1	Phenomena of Limestone Reactivity Upset	201
		5.3.4.2	Recovery of Limestone Reactivity Upset	201
		5.3.4.3	Cessation of Hydrated Lime Injection	202
5.4	Trouble Shooting			203
	5.4.1	SO_2 Removal Efficiency Upset		203
	5.4.2	Gypsum Purity Upset		205
	5.4.3	Abnormal Pressure Loss		205
	5.4.4	Slurry Concentration Abnormal		206
	5.4.5	Troubleshooting Tables		207

LIST OF FIGURES AND TABLES

Table 2.5.1	Water Analysis Table	8
Figure 3	Bailly 528 MW Process Flow Diagram	10
Figure 3a	Bailly 528 MW FGD DCS Schematic Flow Diagram Gas Phase	11
Figure 3b	FGD Flue Gas Flow Diagram	13
Figure 3c	Bailly 528 MW FGD Schematic Flow Diagram Liquid Phase	14
Figure 3.2.1.1	Absorber Module	17
Figure 3.2.1.2	Process Flow Diagram Absorption Section	18
Figure 3.2.1.3	Air Rotary Sparger	19
Figure 3.2.2.1	Dewatering Section Process Flow Diagram	27
Figure 3.2.2.2	Centrifuge Cycle	28
Figure 3.2.3.1	Bailly 528 MW FGD Schematic Flow Limestone Feed System	37
Figure 3.2.3.2	B-520A/C Unloading Blowers DCS Graphic	39
Figure 3.2.3.3	Limestone Feed System DCS Graphic	41
Figure 3.2.4.1	NIPSCO Potable Water System	46
Figure 3.2.4.2	Process Water Distribution	47
Figure 3.2.4.3	Potable Water Flow Diagram	48
Figure 3.2.4.4	Instrument Air Distribution	50
Figure 3.2.6.1	Hydrated Lime Storage	61
Figure 3.2.6.2	Hydrated Lime Feed to the Injection Tanks DCS Graphic	63
Figure 3.2.6.3	Hydrated Lime Feed to the Absorber DCS Graphic	65
Figure 3.2.7.1	Wastewater Treatment Plant Simplified Flow Diagram	69
Figure 3.3.1.1	Absorber Recirculation Pump Start-up & Shutdown Sequence	82
Figure 3.3.1.2	Schematic Flow Diagram for Absorber Slurry Recirculation Line	83
Figure 3.3.1.3	Schematic Flow Diagram for Thickener Underflow Line	88
Figure 3.3.1.4	Thickener Underflow Pump Start-up & Shutdown Sequence	89
Figure 3.3.1.5	Absorber Sump Pump Start-up & Shutdown Sequence	91
Figure 3.3.2.1	pH Analyzer AIT-138A/B DCS Graphic	101
Figure 3.3.2.2	pH Analyzer AIT-190A/B DCS Graphic	103
Figure 3.3.3.1	FGD Permissive Start Logic DCS Graphic	105
Figure 3.3.5.1	Absorber Sulfur Emission Control Loop	110
Figure 3.3.5.2	Absorber Sulfur Emission Control Conceptual Diagram	111
Figure 3.3.5.3	Flue Gas Flowrate - DCS Graphic	113
Figure 3.3.5.4	FGD Load Signal - DCS Graphic	117
Figure 3.3.5.5	Absorber Liquid Level Concentration Control Diagram	120
Figure 3.3.5.6	Centrifuge Feed Tank Level Control	122
Figure 3.3.5.7	Centrifuge Feed Tank DCS Graphic	123
Figure 3.3.5.8	Centrifuge Train DCS Graphic	125
Figure 3.3.5.9	Centrifuge DCS Graphic	127
Figure 3.3.5.10	Mist Eliminator and Wet/Dry Interface Washing Pattern	130
Figure 3.3.5.11	Mist Eliminator Wash Piping Arrangement	131
Figure 3.3.5.12	Air Rotary Sparger Air & Wash DCS Graphic	133
Figure 3.3.5.13	Fixed Air Sparger Air & Wash DCS Graphic	135

LIST OF FIGURES AND TABLES
(continued)

Figure 3.3.5.14	WES Piping DCS Graphic	137
Figure 3.3.5.15	WES Operation Sequence	140
Figure 3.3.5.16	Wastewater Effluent Quantity FY-216-01	141
Figure 3.3.5.17	Wastewater Quantity Control	143
Figure 3.3.5.18	Oxidation Air Required to ARS - FY-345 DCS Graphic	149
Figure 3.3.5.19	Oxidation Air Required to FAS - FY-344 DCS Graphic	151
Figure 3.3.5.20	Oxidation Air Blower DCS Graphic	153
Figure 4.2.1.1	Absorber Tank Fill-up Operation Valve Position	158
Figure 4.2.3.1	Limestone Feed Requirement - FY-242 DCS Graphic	167
Table 4.1.a	Plant Shutdown Mode Status Table	178
Table 4.1.b	Long-term Shutdown Mode Status Table	181
Table 4.1.c	Short-term Shutdown Mode Status Table	184
Table 4.1.d	Normal Operating Mode Status Table	187
Figure 5.2.1	Degree Of Super-Saturation vs. Rate of Scale Formation	196
Figure 5.2.2	Seed Crystal Gypsum Concentration vs. Gypsum Super-saturation	196
Table 5-1	Flue Gas Troubleshooting	208
Table 5-2	Absorber Troubleshooting	209
Table 5-3	Limestone/Hydrated Lime Troubleshooting	214
Table 5-4	Dewatering/Gypsum Handling Troubleshooting	216
Table 5-5	Wastewater Treatment Troubleshooting	226

APPENDICES

		Page
Appendix-1	Calculation Formula Used for System Control	232
Appendix-2.a	ARS Feed Air Quantity vs. FGD Load (Normal Operating Condition)	235
Appendix-2.b	FAS Feed Air Quantity vs. FGD Load (Normal Operating Condition)	236
Appendix-2.c	FAS Feed Air Quantity vs. FGD Load (Liquid Reduction Operation)	237
Appendix-2.d	FAS Feed Air Quantity vs. FGD Load (Liquid Reduction Operation)	238
Appendix-3	Wastewater Quantity vs. FGD Inlet Flue Gas Volume	239
Appendix-4	Gypsum Slurry Conc. vs. Liquid Level Correction Factor	240
Appendix-5	Limestone Feed Quantity vs. FGD Load	241
Appendix-6	Required Time for Absorber Slurry Density Adjustment	242
Appendix-7	Correlation Between FGD Inlet vs. FGD Outlet SO_2 Quantity	243
Appendix-8	Number of Absorber Recirculation Pumps Operating vs. FGD Load	244
Appendix-9	Maximum Allowable Unreacted Limestone Conc. vs. FGD Load	245
Appendix-10	Fly Ash Accumulation During Thickener Upset.	246
Appendix-11	Evaporation Water Quantity vs. FGD Inlet Flue Gas Volume	247
Appendix-12	Absorber Liquid Level vs. Liquid Reduction Operating Time	248
Appendix-13.a.	Relation between SO_3 Conc. and Dew Point Temperature	251
Appendix-13.b	Air Heater Outlet Flue Gas Temp vs. Carry Over SO_3 Ratio	252

APPENDIX D
PURE AIR ANALYTICAL TESTING PROGRAM

METHODOLOGY

The sampling followed procedures as detailed in U.S. Environmental Protection Agency (EPA) Methods 1, 2, 3B, 4, 5B, 6C, 8, 26, 26A and 29. The following table summarizes the methods and their respective sources.

Table 4-1:
Summary of Sampling Procedures

Title 40 CFR Part 60 Appendix A	
Method 1	"Sample and Velocity Traverses for Stationary Sources"[1]
Method 2	"Determination of Stack Gas Velocity and Volumetric Flow Rate (Type S Pitot Tube)"
Method 3B	"Gas Analysis for the Determination of Emission Rate Correction Factor or Excess Air"
Method 4	"Determination of Moisture Content in Stack Gases"
Method 5B	"Determination of Nonsulfuric Acid Particulate Matter from Stationary Sources"
Method 6C	"Determination of Sulfur Dioxide Emissions from Stationary Sources (Instrumental Analyzer Procedure)"
Method 8	"Determination of Sulfuric Acid Mist and Sulfur Dioxide Emissions from Stationary Sources"
Method 26	"Determination of Hydrogen Chloride Emissions from Stationary Sources"
Method 26A	"Determination of Hydrogen Halide and Halogen Emissions from Stationary Sources - Isokinetic Method"
Method 29	"Determination of Metals Emissions from Stationary Sources (Draft)"
Also referenced:	
ASTM Method D 3226-73T	"Tentative Method of Test for Sulfur Oxides in Flue Gases (Barium Chloranilate-Controlled Condensation Method)"
TRW Document 28055-6005-RU-00	"Guidelines for Combustion Source Sulfuric Acid Emission Measurements"

[1] At the Unbit 8 East and West ESP Inlets Alternate Method 1 (three dimensional directional probe) was used for velocity traverses.

These methods appear in detail in Title 40 of the Code of Federal Regulations (CFR).

These sampling, recovery and analytical procedures are summarized on pages 4-2 through 4-18.

All equipment was calibrated at the Clean Air Engineering laboratory prior to shipment to the job site. A post calibration was performed on each meter box at the conclusion of testing to verify that calibration was maintained throughout the test program. Calibration sheets can be found in Appendix Section C.

METHODOLOGY

SAMPLING POINT DETERMINATION

Sampling point locations were determined according to EPA Method 1.

Table 4-2 outlines the sampling point configurations. Figure 4-1 through 4-3 illustrate the sampling points and orientation of sampling ports for each of the sources tested in the program.

Table 4-2:
Sampling Points

Location Constituent	Method	Run No.	Ports	Points per Port	Minutes per Point	Total Minutes	Figure
Unit 8 East and West ESP Inlets							
3 Dimensional Flow	Alt. M1	P1-4, 1-6	6	6	Varied	Varied	4-1
Sulfuric Acid Mist	ASTM D3226-73T	P1-4, 1-6	1	1	30	30	4-1
HCl/HF	26	1-6	1	1	60	60	4-1
Combined Units 7 and 8 FGD Inlet							
Volumetric Flow	1-4	P3-4	7	4	Varied	Varied	4-2
Particulate/Metals	5B/29	1-4	7	4	2.5	70	4-2
Sulfur Dioxide	6C	1-4	1	1	60	60[1]	4-2
Sulfuric Acid Mist	ASTM D3226-73T	1,4	1	1	30	30	4-2
HCl/HF	26	3,4	1	1	60	60	4-2
Combined Units 7 and 8 Stack							
Particulate/Metals	5B/29	1-4	4	3	6	72	4-3
Sulfur Dioxide	6C	1-4	1	1	60	60[1]	4-3
Sulfuric Acid Mist	8	1,4	1	1	60	60	4-3
HCl/HF	26A	3,4	1	1	60	60	4-3

[1] Sulfur Dioxide was sampled at a single point which was determined from a SO_2 traverse performed on March 21, 1995.

METHODOLOGY

SAMPLING POINT DETERMINATION (CONTINUED)

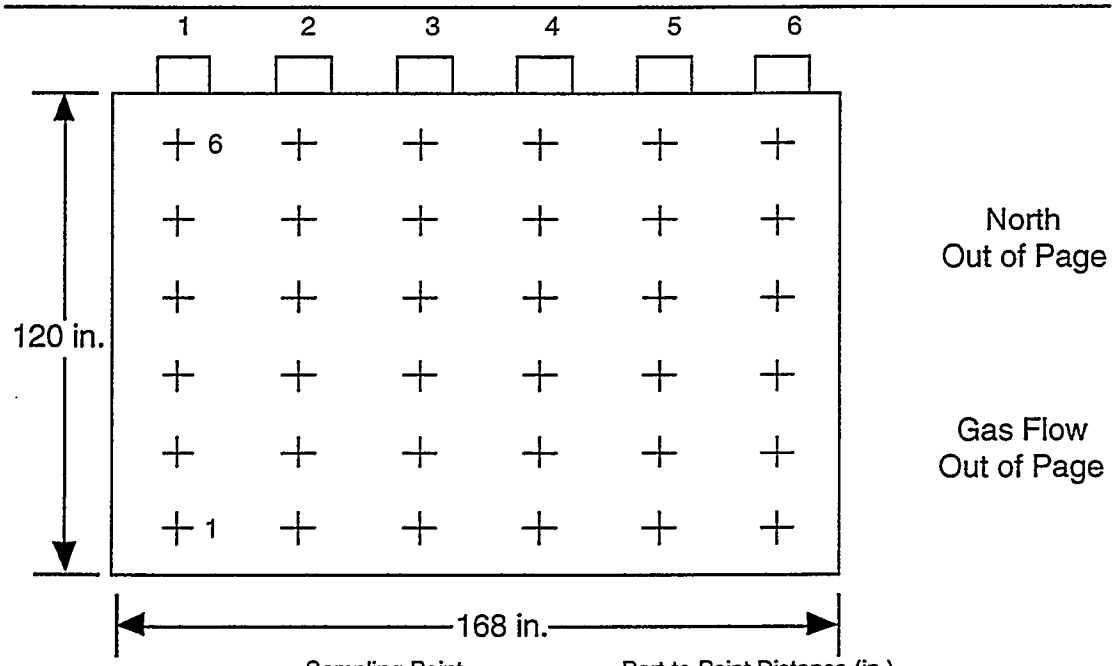

Sampling Point	Port to Point Distance (in.)
1	10.0
2	30.0
3	50.0
4	70.0
5	90.0
6	110.0

Equivalent Diameters to upstream disturbance: 4.28 Limit: 2.0
Equivalent Diameters to downstream disturbance: 2.57 Limit: 0.5

Figure 4-1: Unit 8 East and West ESP Inlets Sampling Point Determination (EPA Method 1)

METHODOLOGY

SAMPLING POINT DETERMINATION (CONTINUED)

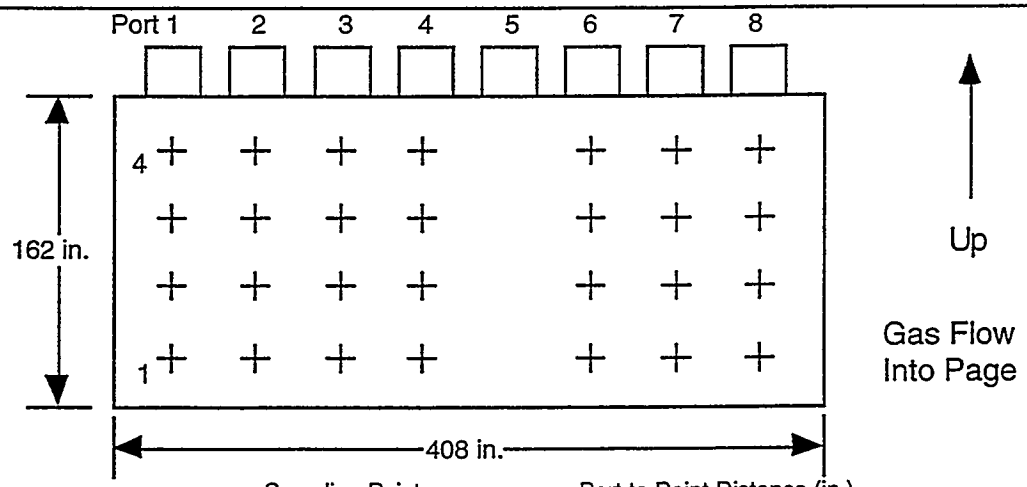

Sampling Point	Port to Point Distance (in.)
1	141.8
2	101.3
3	60.8
4	20.3

Equivalent Diameters to upstream disturbance: 1.03 Limit: 2.0
Equivalent Diameters to downstream disturbance: 0.28 Limit: 0.5

Port 5 was obstructed by a CEM probe and was therefore not sampled.

Figure 4-2: Combined Units 7 and 8 FGD Inlet Sampling Point Determination (EPA Method 1)

METHODOLOGY

SAMPLING POINT DETERMINATION (CONTINUED)

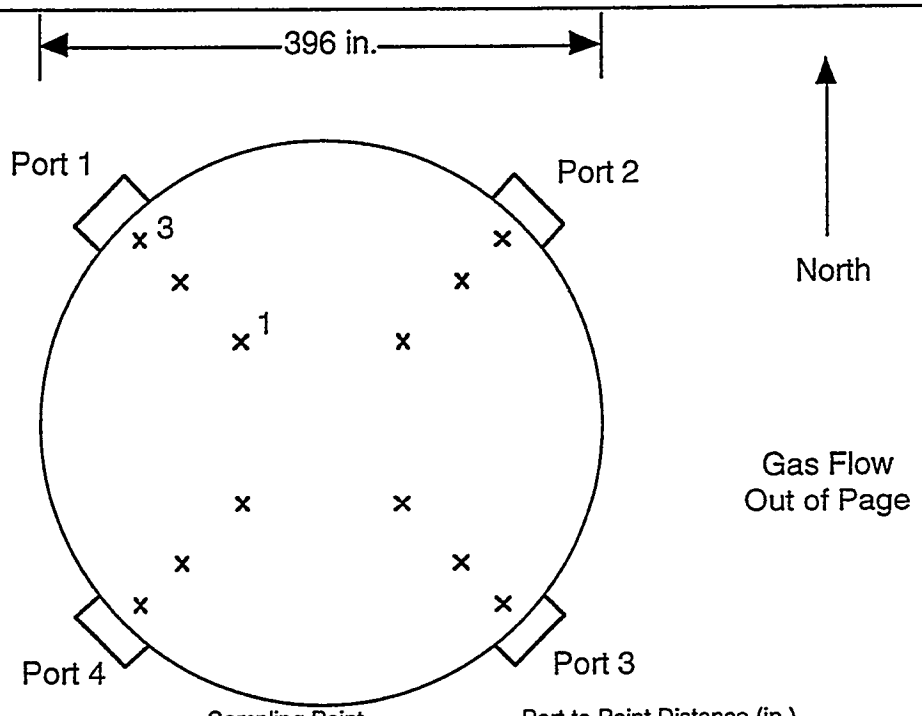

Sampling Point	Port to Point Distance (in.)
1	117.2
2	57.8
3	17.4

Diameters to upstream disturbance: 9 Limit: 2.0
Diameters to downstream disturbance: 3.4 Limit: 0.5

Figure 4-3: Combined Units 7 and 8 Stack Sampling Point Determination (EPA Method 1)

METHODOLOGY

VELOCITY AND VOLUMETRIC FLOW RATE - EPA METHOD 2

EPA Method 2 was used, in conjunction with the EPA Method 5B/29 testing, to determine the gas velocity and flow rate at the Combined Units 7 and 8 FGD Inlet and Stack. Figure 4-4 includes the components of the EPA Method 2 sampling apparatus.

Each set of velocity determinations included the measurement of gas velocity pressure and gas temperature at each of the EPA Method 1 traverse points. The velocity pressures were measured with a Type S pitot tube. Gas temperature measurements were made using a Type K thermocouple and digital pyrometer.

GAS COMPOSITION AND MOLECULAR WEIGHT - EPA METHOD 3B

In order to determine the oxygen (O_2) concentration, carbon dioxide (CO_2) concentration and gas molecular weight, a time-integrated sample of the gas was obtained and analyzed in accordance with EPA Method 3B. The gas sample was collected into a vinyl sample bag from the EPA Method 5B/29 testing at the Combined Units 7 and 8 FGD Inlet and Stack. The gas sample was also collected from EPA Method 26 at the Unit 8 East and West ESP Inlets. The contents of the bag were analyzed for O_2 and CO_2 concentrations using an Orsat gas analyzer.

MOISTURE CONTENT - EPA METHOD 4

The flue gas moisture content at each of the test locations was determined in accordance with EPA Method 4, in conjunction with the EPA Method 5B/29 testing at the Combined Units 7 and 8 FGD Inlet and Stack. Moisture content was also determined with EPA Method 26 at the Unit 8 East and West ESP Inlets. Figure 4-4 includes the components of the EPA Method 4 sampling apparatus. The gas moisture was determined by quantitatively condensing the water in chilled impingers. The amount of moisture condensed was determined gravimetrically. A dry gas meter was used to measure the volume of gas sampled. The amount of water condensed and the volume of gas sampled were used to calculate the gas moisture content in accordance with EPA Method 4.

METHODOLOGY

PARTICULATE AND MULTI-METALS EMISSIONS - EPA METHODS 5B AND 29

The EPA Methods 5B/29 was used to measure particulate matter (PM), Antimony (Sb), Arsenic (As), Barium (Ba), Berylium (Ba), Cadmium (Cd), Chromium (Cr), Copper (Cu), Manganese (Mn), Nickel (Ni), Lead (Pb), Selenium (Se), Silver (Ag) and Zinc (Zn) emissions at the Combined Units 7 and 8 FGD Inlet and Stack. Method 5B defines PM as any material that is collected before or on the surface of a quartz filter maintained at 320°F. The multi-metals are collected in an impinger train following the filter. Stack gas was isokinetically withdrawn through a temperature-controlled probe and high-efficiency quartz filter.

Figure 4-4 illustrates the EPA Method 5B/29 sampling apparatus which was used. The sampling apparatus contained a teflon lined temperature-controlled probe equipped with a Type S pitot tube (for measuring stack gas flow rate) and a sharp-edged glass button-hook nozzle. The exit of the probe was connected to a high efficiency quartz fiber filter (Pallflex 2500QAT-UP) supported in a borosilicate glass filter holder inside an oven. The exit of the filter holder connected to a series of four full size impingers. The first two impingers each contained 100 milliliters of 5% nitric acid/10% hydrogen peroxide solution. The third impinger was left empty. The fourth impinger contained 300 grams of silica gel. The sample gas exiting the last impinger was maintained at a temperature below 68°F for the duration of each test.

Procedures for selecting sampling locations and for operation of the apparatus were derived from EPA Method 5B and associated EPA Methods 1 through 4. The sampling apparatus was leak-checked before and after each test run. Sampling was performed at an isokinetic rate greater than 90% and less than 110%.

At the conclusion of each test run, the teflon probe and nozzle were rinsed and brushed with acetone. The acetone rinse was collected into a glass sample container. The probe and nozzle were then rinsed and brushed with 0.1 Normal nitric acid. This rinse was collected into polyethylene sample container. The quartz fiber filter was recovered and placed into the original filter container and sealed. The impingers were weighed to determine moisture content.

Particulate samples collected on quartz filters were analyzed gravimetrically to a constant weight. The teflon probe and nozzle wash was transferred to tared beakers, evaporated to dryness and weighed to a constant weight. The weight differentials of the filter and acetone washes were combined to determine total PM. The PM analysis was performed by Clean Air Engineering on site.

The liquid from the first three impingers was transferred to a leak-free polyethylene storage container. The back-half of the filter housing, the first three impingers and all connecting glassware were quantitatively rinsed with 0.1 Normal nitric acid which was added to the storage container.

METHODOLOGY

PARTICULATE AND MULTI-METALS EMISSIONS (CONTINUED)

Analyses of the samples for metals were performed in accordance with EPA Method 29 procedures utilizing inductively coupled argon plasma (ICAP) spectroscopy.

The nitric acid probe rinses, and samples recovered from impingers 1 through 3 were each reduced to near dryness and digested with hydrofluoric acid and concentrated nitric acid. The filter was digested with hydrofluoric and nitric acids. These digested samples were analyzed for each of the target metals. All of the analyses were performed by Oxford Laboratories of Wilmington, North Carolina. Appendix Section K contains the laboratory report for the analyses.

METHODOLOGY

PARTICULATE AND MULTI-METALS EMISSIONS (CONTINUED)

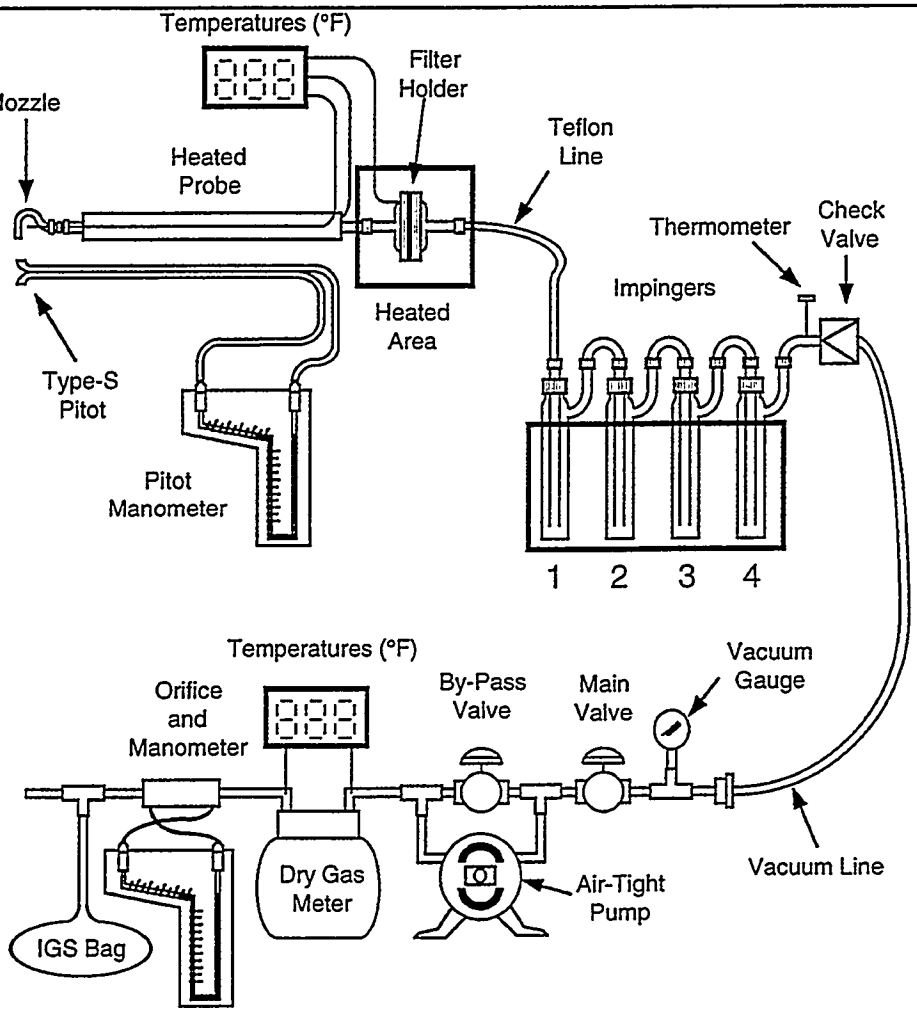

Impinger Contents
1) 100 ml 5% HNO_3/10% H_2O_2
2) 100 ml 5% HNO_3/10% H_2O_2
3) empty
4) 300 g silica gel

Figure 4-4: Particulate and Multi-Metals Sampling Apparatus (EPA Method 5B/29)

METHODOLOGY

SULFUR DIOXIDE AND SULFUR TRIOXIDE - EPA METHOD 8

At the Combined Units 7 and 8 Stack location, sulfuric acid mist concentrations were determined following procedures detailed in EPA Method 8. The sampling apparatus is shown in Figure 4-4 on page 4-8. Gaseous sulfur trioxide, sulfur dioxide and condensed acid mist particles were withdrawn isokinetically, at a rate greater than 90% and less than 110%, from the Combined Units 7 and 8 Stack location in conjunction with the ASTM D 3226-73T testing at the Combined Units 7 and 8 FGD Inlet testing.

The acid mist particles were collected in a teflon lined probe and heated sample line. The probe and heated sample line were heated to 230°F during sampling. Gaseous sulfur trioxide was condensed in the first two impingers which contained 80% isopropanol. To assure collection of condensed acid mist particles, an unheated quartz filter was used between the 80% isopropanol impingers and the 3% hydrogen peroxide impingers. Sulfur dioxide was then collected in two impingers of hydrogen peroxide.

The probe and heated sample line were rinsed with 80% isopropanol into a sample bottle. The unheated filter was combined with the 80% isopropanol solution of the first two impingers into a second sample bottle. The hydrogen peroxide impinger catches were combined into a third sample bottle. The three catches (H_2SO_4 mist, gaseous SO_3 and SO_2) were then analyzed titrimetrically in accordance with EPA Methods 6 and 8.

METHODOLOGY

SULFUR DIOXIDE AND SULFUR TRIOXIDE - EPA METHOD 8 (CONTINUED)

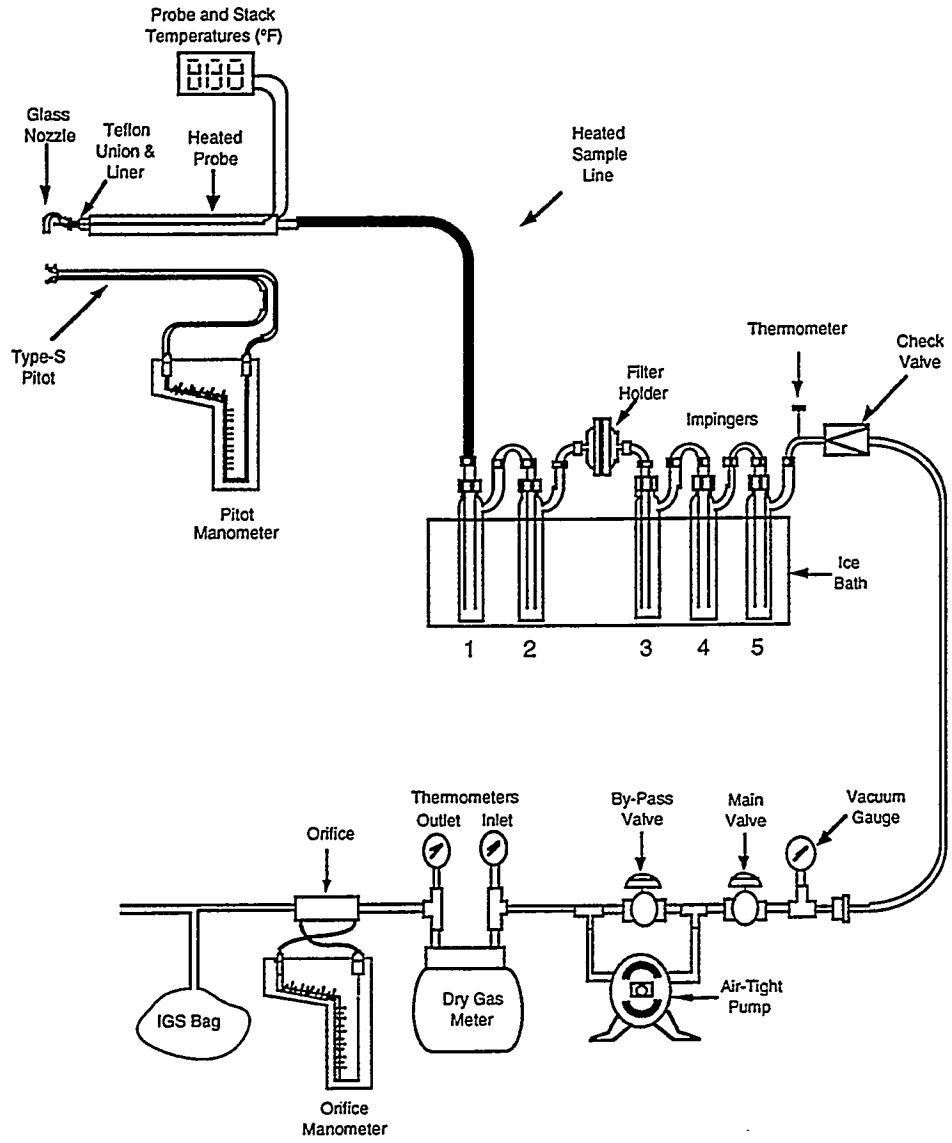

Impinger Contents

1) 100 ml 80% Isopropal Alcohol
2) 100 ml 80% Isopropal Alcohol
3) 100 ml 3% H_2O_2
4) 100 ml 3% H_2O_2
5) 300 g silica gel

Figure 4-5: Sulfuric Acid Mist Sampling Apparatus (EPA Method 8)

METHODOLOGY

HYDROGEN CHLORIDE - EPA METHOD 26A

EPA Method 26A was used to measure hydrogen chloride (HCl) and hydrogen fluoride (HF) at the Combined Units 7 and 8 Stack. Method 26 was used at the Unit 8 East and West ESP Inlets and the Combined Units 7 and 8 FGD Inlet. HCl and HF are collected in an impinger train following a teflon filter. Stack gas was isokinetically withdrawn through a temperature-controlled probe and high-efficiency teflon filter at the stack location. Stack gas was withdrawn at a single point at the three inlet locations.

Figure 4-6 illustrates the EPA Method 26A sampling apparatus which was used at the stack location. The sampling apparatus for the Method 26 is the same as for Method 26A. The sampling apparatus contained a glass lined temperature-controlled probe equipped with a Type S pitot tube (for measuring stack gas flow rate) and a sharp-edged (stainless-steel for Inlet, glass for Stack) button-hook nozzle. The exit of the probe was connected to a high efficiency teflon filter (TX40H120WW 82mm) supported in a borosilicate glass filter holder inside an oven. The exit of the filter holder connected to a series of five full size impingers. The first three impingers each contained 100 milliliters of 0.1 N H_2SO_4. The fourth impinger contained 100 milliliters of 0.1 N NaOH, and the fifth contained a tared quantity of silica gel. The sample gas exiting the last impinger was maintained at a temperature below 68°F for the duration of each test.

Procedures for selecting sampling locations and for operation of the apparatus were derived from EPA Method 26A and associated EPA Methods 1 through 4. The sampling apparatus was leak-checked before and after each test run. Sampling was performed at an isokinetic rate greater than 90% and less than 110% at the stack location.

At the conclusion of each test run, the teflon line to the impingers was rinsed with deionized water into the first impinger. The impingers were weighed to determine a moisture content. The first three impingers and connecting glassware were then recovered and rinsed into a glass sample jar. The fourth impinger and connecting glassware was recovered and rinsed into a separate sample jar.

The contents of the first three impingers were analyzed for chloride and fluoride ions. The results were then converted to hydrogen chloride (HCl) and hydrogen fluoride (HF), respectively. The analysis was performed by Ion Chromatography by Clean Air Engineering located in Palatine, IL.

METHODOLOGY

HYDROGEN CHLORIDE (CONTINUED)

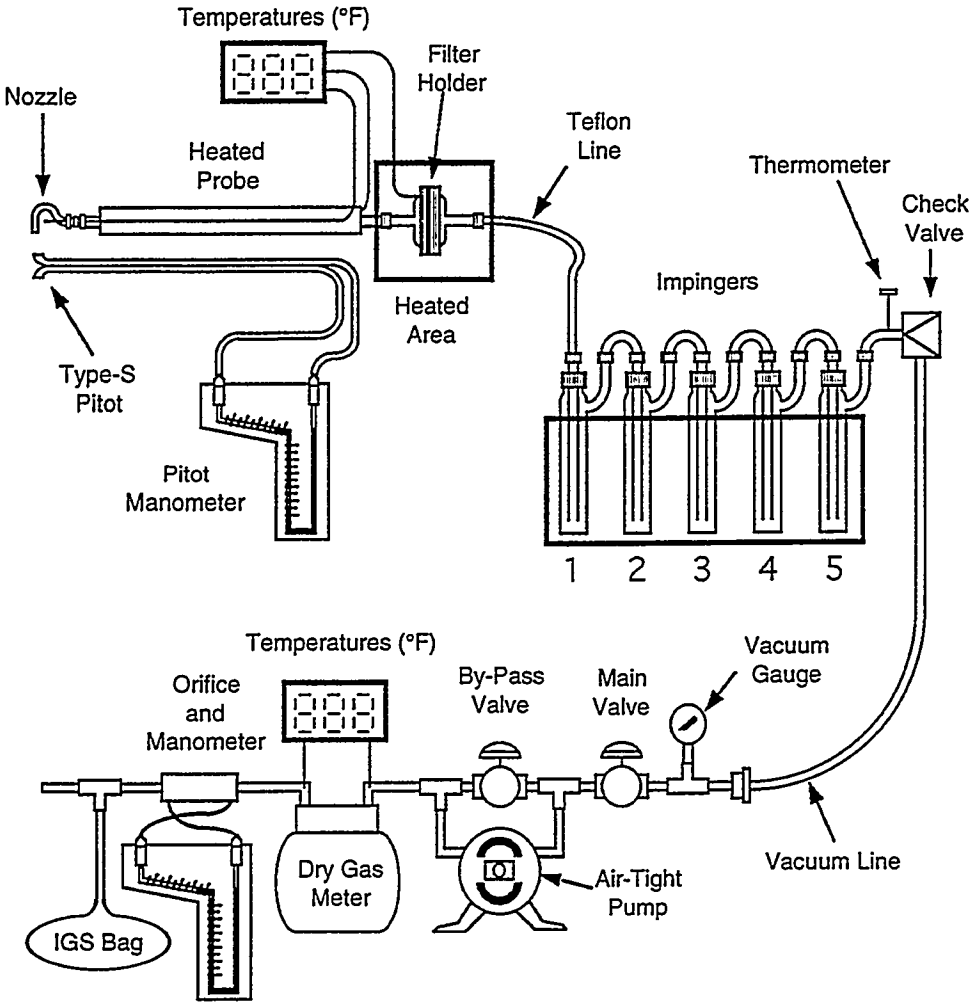

Impinger Contents
1) 100 ml 0.1 N H_2SO_4
2) 100 ml 0.1 N H_2SO_4
3) 100 ml 0.1 N H_2SO_4
4) 100 ml 0.1 N NaOH
5) 300 g silica gel

Figure 4-6: Hydrogen Chloride Sampling Apparatus (EPA Method 26A)

METHODOLOGY

ASTM D 3226-73T CONTROLLED CONDENSATION

The concentrations of sulfur trioxide at the Unit 8 East and West ESP Inlets and the Combined Units 7 and 8 FGD Inlet were determined in accordance with a modified version of ASTM D3226-73T. The testing at the Unit 8 East and West ESP Inlets was performed simutaneously with each other. The testing at the Combined Units 7 and 8 FGD Inlet was performed simultaneously with EPA Method 8 testing at the stack location. The sampling apparatus is shown in Figure 4-7 on Page 4-15. Sampling was performed at a single point located near the center of the duct. The filter holder used during sampling was kept at 550°F to minimize the adsorption of sulfur trioxide by any collected particulate matter. Sulfuric acid vapor was then collected in a "hot" condenser. The "hot" condenser is a straight through glass tube packed with eight inches of acid-rinsed glass wool held at 150°F in a water bath. As sulfur trioxide condenses, it is filtered out by the glass wool packing. Sulfur dioxide was then collected in two impingers containing a 3% solution of hydrogen peroxide in deionized water. Following sampling, the "hot" condenser was rinsed with 75 ml of an 80% isopropanol solution. This catch was labeled rinse one. A second rinse of 50 ml of 80% isopropanol was then performed and saved separately. This second rinse was performed and analyzed separately to assure that greater than 90% of the acid caught, had been recovered in the first rinse. The hydrogen peroxide solution was then recovered into a third container. The three catches were analyzed titrimetrically in accordance with EPA Method 6.

METHODOLOGY

ASTM D 3226-73T CONTROLLED CONDENSATION (CONTINUED)

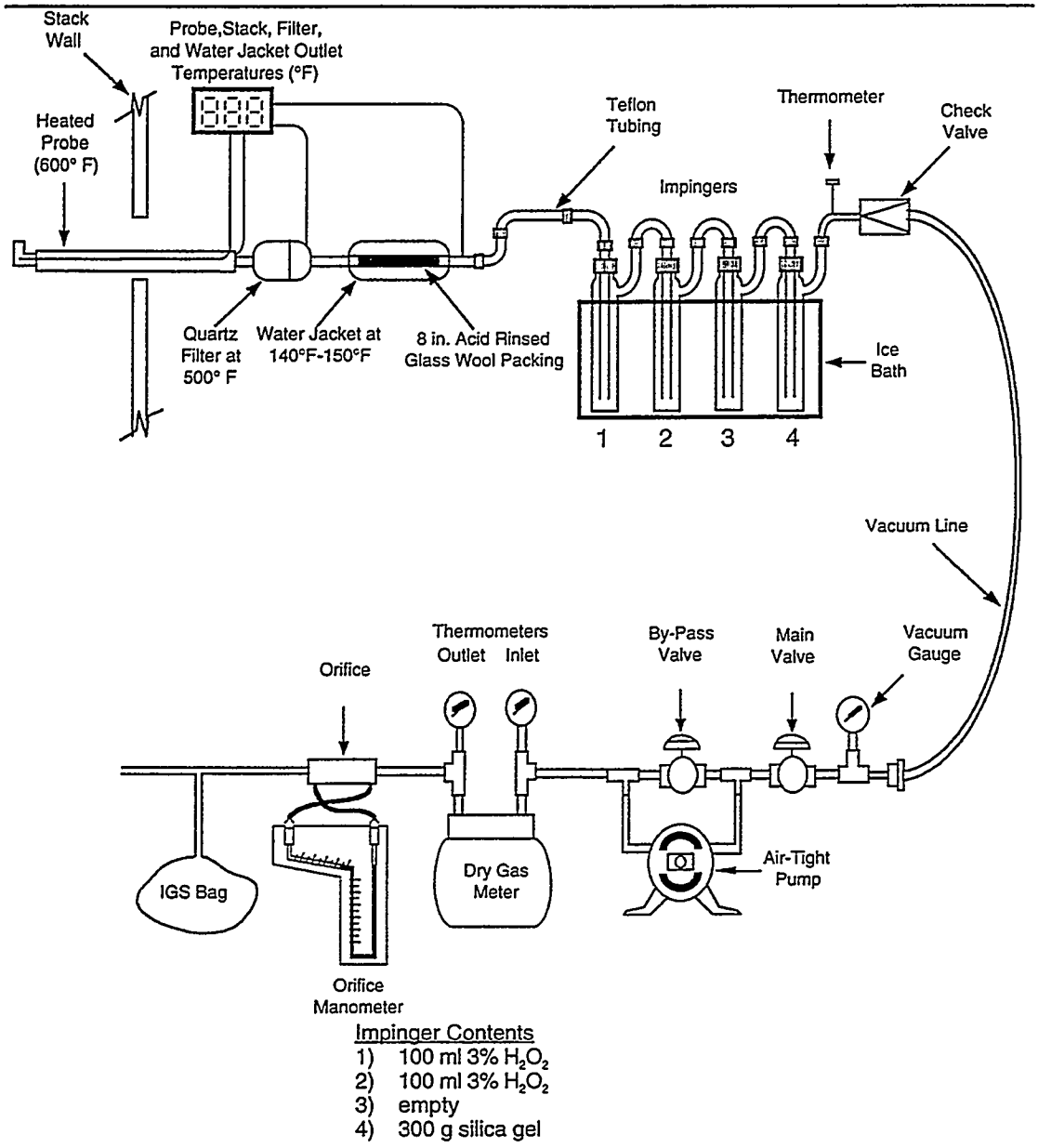

Impinger Contents
1) 100 ml 3% H_2O_2
2) 100 ml 3% H_2O_2
3) empty
4) 300 g silica gel

Figure 4-7: Sulfuric Acid Mist Sampling Apparatus (ASTM D3226-73T)

METHODOLOGY

CONTINUOUS EMISSIONS MONITORING

Monitoring of sulfur dioxide (SO_2) emissions at the Combined Units 7 and 8 FGD Inlet and Stack was performed using EPA Method 6C. A gas sample was continuously extracted from the stack and delivered to a gas analyzer which measured the pollutant concentration in the gas. The analyzer was calibrated on-site using certified mixtures of calibration gases. All calibration gases were blended with nitrogen.

Figure 4-8 contains a general schematic of the continuous emissions monitoring (CEM) system. The system utilized a heated stainless steel probe for gas withdrawal. The end of the probe was connected to a filter inside of a heated box for particulate removal. The filter was connected to a heated teflon sample line which delivered the sample gases from each testing location to the CEM system. The heated sample line was designed to maintain the gas temperature above 250°F in order to prevent condensation of stack gas moisture within the line.

Table 4-3 lists the analyzers used to perform the continuous emissions monitoring.

Table 4-3
Gas Analyzers

GAS	METHOD	REFERENCE ANALYZER MANUFACTURER	PRINCIPLE OF OPERATION
SO2	EPA 6C	Western Research 721AT	UV Absorption

Determination of SO_2 Concentrations
EPA Method 6C
Before entering the analyzers, the gas sample passed directly into a refrigerated condenser which cooled the gas to approximately 35°F to remove the sample gas moisture. After passing through the condenser, the dry gas entered a Teflon-head diaphragm pump and a flow control panel which delivered the gas to the SO_2 analyzer. The analyzer measured the gas concentrations on a dry volumetric basis.

METHODOLOGY

CONTINUOUS EMISSIONS MONITORING (CONTINUED)

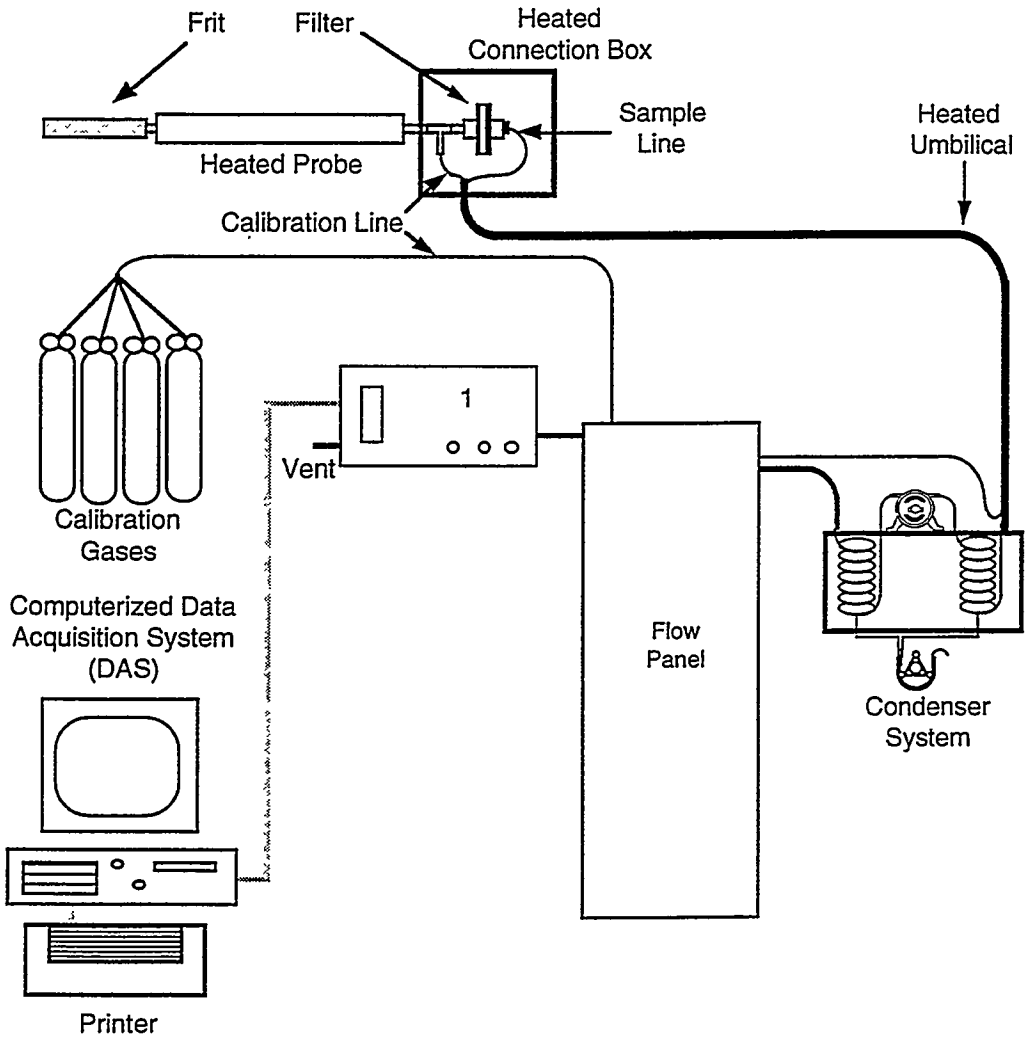

No	Gas	Monitor	Range Used	Calibration Gas Concentrations
1)	SO_2	Western Research 721AT	0-5,000	1,990, 3,578 ppm (Inlet)
	SO_2	Western Research 721AT	0-500	219.4, 449.7 ppm (Stack)

Figure 4-8: CEM Apparatus (EPA Method 6C)

METHODOLOGY

CONTINUOUS EMISSIONS MONITORING (CONTINUED)

The analyzer was calibrated according to the respective reference method procedures. Before testing, the analyzer was checked for calibration error by introducing a zero, mid-level and high-level certified calibration gas directly into the analyzer. All of the reference method criteria for calibration error were demonstrated for the analyzer before testing could proceed.

EPA Protocol No. 1 certified calibration mixtures were used to calibrate the analyzer. All calibration gases were blended with nitrogen.

Before and after each of the test runs, the zero gas and one up-scale gas for each analyzer was introduced into the sampling line at the exit of the heated probe to check for sampling system bias and calibration drift. The demonstration of reference method criteria for bias (pre- and post-test) and calibration drift was required for a valid test run. The results of the pre-test and post-test bias checks were used to correct the average flue gas concentration measured during each test run for analyzer drift during that period.

Pure Air
Analytical Testing Program

Bailly Generation Station Advanced Flue Gas Desulfurization Project

Prepared for

U.S. Department of Energy
Pittsburgh Energy Technology Center
P.O. Box 10940
Pittsburgh, PA 15236-0940

Prepared by

Pure Air On The Lake, Limited Partnership
c/o Air Products and Chemicals, Inc.
7201 Hamilton Boulevard
Allentown, PA 18195-1501

February, 1993

CONTENTS

Section		Page
	Section Summary	iv
6.2.1	**Sample Acquisition, Handling, and Identification**	1-1
	FGD Sampling Locations	1-3
	Absorber Slurry	1-3
	Filtrate Sump	1-4
	Thickener Underflow	1-6
	Thickener Overflow	1-7
	Gypsum By-Product	1-9
	Process Water	1-10
	Wastewater Influent	1-12
	Wastewater Effluent	1-13
6.2.2	**Analytical Methodology**	2-1
	Instrumental Procedures	2-1
	Gypsum By-Product Analytical Procedures	2-7
	Process Slurry Analytical Procedures	2-22
	Limestone Analytical Procedures	2-25
	Coal Analytical Procedures	2-31
	Fly Ash Analytical Procedures	2-40
	Process Water Analytical Procedures	2-52
	Wastewater Influent / Effluent Analytical Procedures	2-58
6.2.3	**Laboratory Operations**	3-1
	Laboratory Layout, Equipment, and Supplies	3-1
	Lab Personnel	3-6
	Quality Assurance	3-9
	Contract Lab Support	3-17
	Laboratory Safety	3-23
6.2.4	**References**	4-1
Appendix A	Contract Laboratories	A-1
Appendix B	Laboratory Products Distributors	B-1
Appendix C	Safe Work Practices	C-1

FIGURES

Figure		Page
1-1	Absorber Slurry Sampling Location	1-5
1-2	Filtrate Sump Sampling Location	1-5
1-3	Thickener Underflow Sampling Location	1-8
1-4	Thickener Overflow Sampling Location	1-8
1-5	Ramsey Sweep Sampler and Gypsum Conveyor Belt Transporting Product to Storage Building	1-11
1-6	Process Water Sampling Location	1-11
1-7	ISCO Sampler at Wastewater Influent Sampling Site	1-14
1-8	ISCO Sampler at Wastewater Effluent Sampling Site	1-14
3-1	FGD Laboratory Floor Plan	3-2
3-2	FGD Lab Daily Analytical Report Form	3-11
3-3	Mean Control Chart of Domtar GYP-D for Chloride	3-16

TABLES

Table		Page
1-1	Sample Identification Procedure	1-2
1-2	Process Water Sample Preservation	1-10
1-3	Wastewater Influent Sample Preservation	1-12
1-4	Wastewater Effluent Sample Preservation	1-13
2-1	Methods for General Metals Analyses of Gypsum	2-8
2-2	Analytical Methods for Gypsum Wallboard Manufacturing	2-13
2-3	Gypsum TCLP Analytical Methods	2-16
2-4	Indiana Neutral Leachate Methods for Gypsum	2-18
2-5	Radioactivity Methods for Gypsum	2-21
2-6	FGD Process Stream Analytical Methods	2-22
2-7	Methods for General Metals Analyses of Limestone	2-26
2-8	Radioactivity Methods for Limestone	2-30
2-9	Methods for General Metals Analyses of Coal	2-32
2-10	Methods for Coal Proximate Analysis	2-37
2-11	Methods for Coal Ultimate Analysis	2-38
2-12	Methods for Coal Radioactivity Analyses	2-39
2-13	Methods for General Metals Analyses of Fly Ash	2-41
2-14	Fly Ash TCLP Analytical Methods	2-46
2-15	Indiana Neutral Leachate Methods for Fly Ash	2-48
2-16	Radioactivity Methods for Fly Ash	2-51
2-17	Methods for General Metals Analyses of Process Water	2-53
2-18	Methods for General Metals Analyses of Wastewater	2-59
3-1	Analytical Instrumentation and Accessories	3-4
3-2	Laboratory Chemical Reagents	3-5
3-3	General Laboratory Glassware	3-7
3-4	General Lab Supplies	3-8
3-5	Bailly FGD Lab Equipment Calibration Schedule	3-12
3-6	Method Validation Testing Results for Bailly Laboratory	3-14
3-7	Contract Lab Performance Evaluation on Gypsum and Limestone	3-19
3-8	Environmental Contract Lab Performance Evaluation	3-21
3-9	Lab Safety and Maintenance Items	3-25

SECTION SUMMARY

This document serves as a reference source for addressing the sampling protocol, analytical testing methods, and laboratory functions associated with the operation of the Pure Air flue gas desulfurization facility. This FGD unit is located at the Northern Indiana Public Service Company's Bailly Generating Station in Chesterton, Indiana.

This document is comprised of four sections. Section 1 describes the sample locations throughout the FGD facility which were used to monitor the performance of the system during various testing programs. Photographs of each sample point are provided along with a brief description of the location with respect to the overall FGD process. Sample acquisition and preservation techniques for each process stream are also outlined in this section.

Section 2 summarizes the analytical testing methods which were used to characterize the raw materials, process intermediates, and by-products associated with the operation of the FGD facility. Detailed information on specific test methods can be obtained by referencing the appropriate source document. Major types of analytical instrumentation and their principles of operation which were used to support the physical and chemical testing process are described in this section.

A description of overall laboratory operations is provided in Section 3. This section of the document discusses the internal functions of the Bailly laboratory of which its primary function is to provide daily reporting of key physical and chemical parameters used to monitor system performance. Discussions on external contract laboratory testing support, laboratory design including analytical equipment and supplies, quality control/quality assurance programs, laboratory safety, and recordkeeping are included in this section.

A list of references cited in the section on analytical methodology is presented in Section 4. These reference sources document detailed test methods used to: characterize FGD process streams during DOE demonstration tests, fulfill environmental monitoring plan reporting requirements, and assess routine FGD system performance.

SECTION 6.2.1

SAMPLE ACQUISITION, HANDLING, AND IDENTIFICATION

This section provides a description of the process stream sampling locations and collection procedures which are utilized to obtain representative samples for laboratory analysis. Methods for acquiring and preserving samples from eight process streams within the FGD facility are discussed separately. Parameters which require immediate attention at the sampling site due to the nature of their stability are also discussed.

The individual assigned to collect samples should perform the following checklist of activities prior to going out to the designated sampling area in the plant.

1. Obtain enough clean, dry sample bottles for the number of desired sample locations. Ensure that any previous sample coding has been removed from the exterior of the bottle. Label the bottles with the new sample code. Record the sample identification on the logsheet.

2. Run a diagnostic and calibration test on the portable pH meter. The meters used at this facility have automatic temperature compensation and provide a temperature readout. This eliminates the need for correcting pH results and using thermometers.

3. Add known amounts of chemical preservatives into separate sample bottles and label with the appropriate sample ID and type of analysis requested (i.e. A0612207 - sulfite).

4. Miscellaneous items to be taken along with the individual while sampling include: disposable gloves, pen, note pad, sample logsheet, marking pen, stopwatch, graduated cylinder (Nalgene), and extra sample bottles. These items can be easily handled using a plastic tote carrier.

The individual should promptly return the samples and logsheet to the laboratory once the sample acquisition process has been completed.

Samples are coded by process stream location, month, day, year, and time of day. Each sample has its own unique eight digit code which is used for reporting analytical results, maintaining hardcopy data files, and for assigning file names for data entry and analysis purposes. Table 1-1 outlines the procedure for assigning an identification code to a sample.

Table 1-1. Sample Identification Procedure

Sample ID Code = L M M D D Y T T

where:

L = location of sample point (see list of options)
M = month (first digit)
M = month (second digit)
D = day of month (first digit)
D = day of month (second digit)
Y = year (last digit)
T = time of day (military time) rounded to the nearest hour

where location (L):

A = Absorber Bleed Pump	L = Limestone
C = Centrifuge Conveyor	P = Process Water
D = Centrifuge Feed	S = Special
E = Equalization Tank	T = Thickener Overflow
F = Filtrate Sump	U = Thickener Underflow
G = Gypsum (composite sampler)	W = Wastewater Effluent
I = Wastewater Influent	Y = Coal

A gypsum sample collected from the Ramsey composite sampler at 10:15 PM on June 18, 1992 would be assigned the sample code G0618222.

FGD SAMPLING LOCATIONS

Absorber Slurry

Absorber slurry samples are collected from the discharge piping off of the absorber bleed pump. The bleed pump directs slurry to the centrifuge feed tank and/or recycles slurry back to the absorber vessel. This sampling location (Figure 1-1) has been determined to provide a sample with the least amount of variation with respect to density and weight percent solids. The nuclear density analyzer is located in this area of the process and its performance can be monitored by density data provided by the lab. This sample point is continuously flowing, therefore no sample line purging is required.

Samples for laboratory analysis are collected in polyethylene bottles. Attention must be given to the process of filling the sample bottle and not allowing slurry to overflow from the top of the container. Overfilling the sample vessel will result in an inaccurate proportion of solids and liquids present in this segment of the process. The collection of a nonrepresentative sample will in turn initiate a large amount of inaccurate analytical data reported. A sample must be discarded and a new one obtained if the container is inadvertently overfilled. These samples are then transported to the FGD laboratory for physical and chemical testing.

Slurry samples for sulfite determination are collected directly into a separate bottle containing a premeasured amount of iodine solution. This procedure is carried out because sulfites are known to readily oxidize or volatilize unless they are preserved. Temperature and pH measurements on the absorber process stream are performed immediately at the sampling location.

Filtrate Sump

Filtrate sump samples are collected after the discharge of the filtrate sump pumps. These pumps typically direct the flow of this material to the thickener tank. Filtrate sump slurry consists of the following materials from the dewatering operation: (1) overflow from the charging of the centrifuges (2) filtrate removed during centrifuge operation and (3) process water used to wash the gypsum after the solids have been separated from the filtrate. At the time of sampling, a pinch valve on a vertical pipe is opened and the filtrate sump material is allowed to blow down for a period of time prior to sampling (Figure 1-2). A splash guard, which directs flow from an open pipe to a drain line equipped with a collection funnel, prevents spattering on nearby equipment.

Samples for laboratory analysis are collected in polyethylene bottles. Attention must be given to the process of filling the sample bottle and not allowing material to overflow from the top of the container. Overfilling the sample vessel will result in an inaccurate proportion of solids and liquids present in this segment of the process. The collection of a nonrepresentative sample will in turn initiate a large amount of inaccurate analytical data reported. A sample must be discarded and a new one obtained if the container is inadvertently overfilled. These samples are then transported to the FGD laboratory for physical and chemical testing.

Filtrate sump samples for sulfite determination are collected directly into a separate bottle containing a premeasured amount of iodine solution. This procedure is carried out because sulfites are known to readily oxidize to sulfate or volatilize to SO_2 unless they are preserved. Temperature and pH measurements on the filtrate sump process stream are performed immediately at the sampling location.

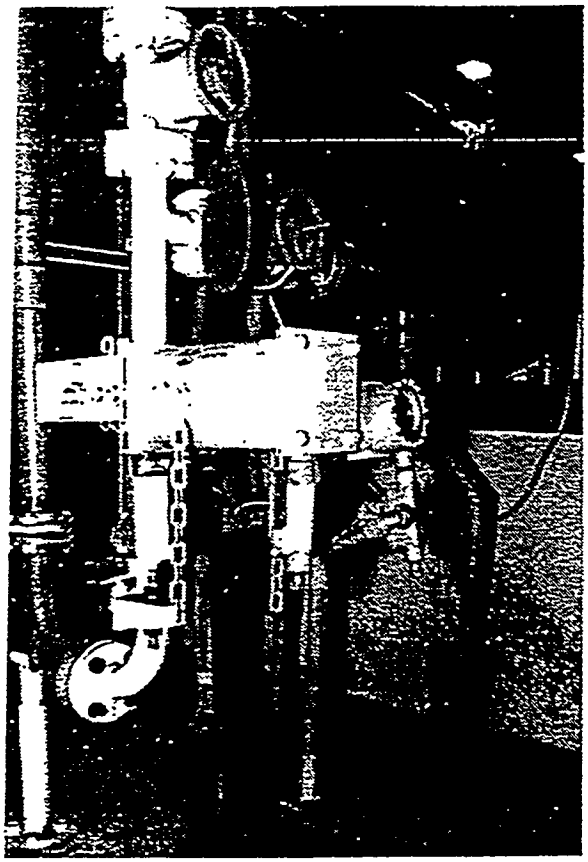

Figure 1-1. Absorber Slurry Sampling Location.

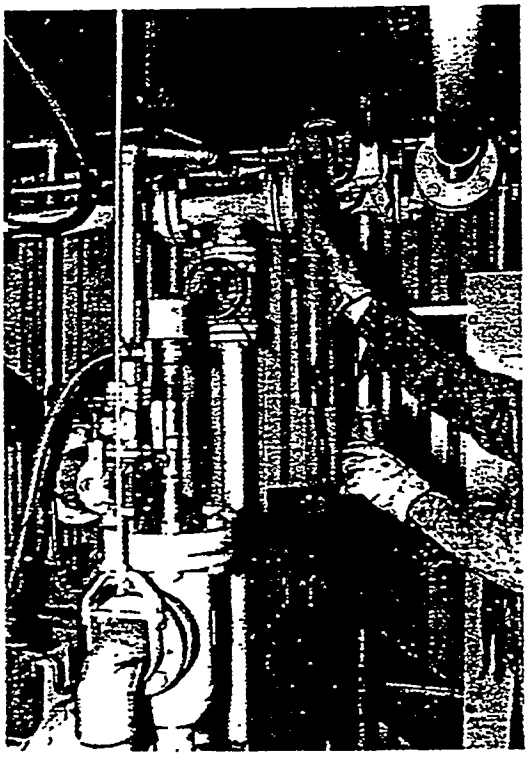

Figure 1-2. Filtrate Sump Sampling Location.

Thickener Underflow

Thickener underflow is sampled at the discharge of the thickener underflow pumps. Underflow material generally consists of the solids which have settled in the thickener tank. These pumps send the process slurry to the centrifuge feed tank or recycles back to the thickener. At the time of sampling, a block valve on vertical piping is opened and underflow material is allowed to blow down for a period of time before sampling (Figure 1-3). A splash guard, which directs slurry from an open pipe to a drain line fitted with a collection funnel, prevents spattering on nearby equipment.

Samples for laboratory analysis are collected in polyethylene bottles. Attention must be given to the process of filling the sample bottle and not allowing slurry to overflow from the top of the container. Overfilling the sample vessel will result in an inaccurate proportion of solids and liquids present in this segment of the process. The collection of a nonrepresentative sample will in turn initiate a large amount of inaccurate analytical data reported. A sample must be discarded and a new one obtained if the container is inadvertently overfilled. These samples are then transported to the FGD laboratory for physical and chemical testing.

Underflow samples for sulfite determination are collected directly into a separate bottle containing a premeasured amount of iodine solution. This procedure is carried out because sulfites are known to readily oxidize or volatilize unless they are preserved. Temperature and pH measurements on the thickener underflow process stream are performed immediately at the sampling location.

Thickener Overflow

Thickener overflow samples are collected at the combined discharge of the thickener overflow pumps. Thickener overflow is the supernatant liquid removed from the thickener tank which then is recycled to the absorber, directed to the filtrate sump, and/or sent to the wastewater treatment facility. At the time of sampling, a pinch valve on a vertical pipe is opened and the thickener overflow material is allowed to blow down for a period of time before sampling (Figure 1-4). A splash guard, which directs flow from an open pipe to a drain line equipped with a collection funnel, prevents spattering on nearby equipment.

Samples for laboratory analysis are collected in polyethylene bottles. Attention must be given to the process of filling the sample bottle and not allowing material to overflow from the top of the container. Overfilling the sample vessel will result in an inaccurate proportion of solids and liquids present in this segment of the process. The collection of a nonrepresentative sample will in turn initiate a large amount of inaccurate analytical data reported. A sample must be discarded and a new one obtained if the container is inadvertently overfilled. These samples are then transported to the FGD laboratory for physical and chemical testing.

Overflow samples for sulfite determination are collected directly into a separate bottle containing a premeasured amount of iodine solution. This procedure is carried out because sulfites are known to readily oxidize or volatilize unless they are preserved. Temperature and pH measurements on the thickener overflow process stream are performed immediately at the sampling location.

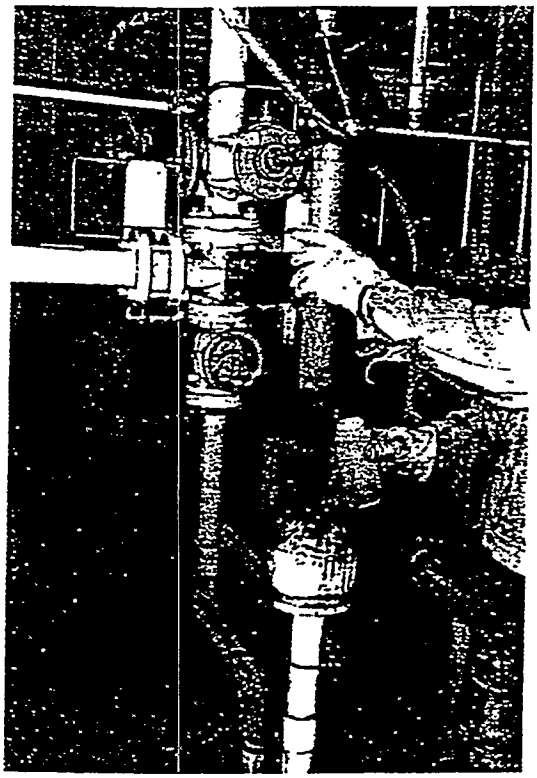

Figure 1-3. Thickener Underflow Sampling Location.

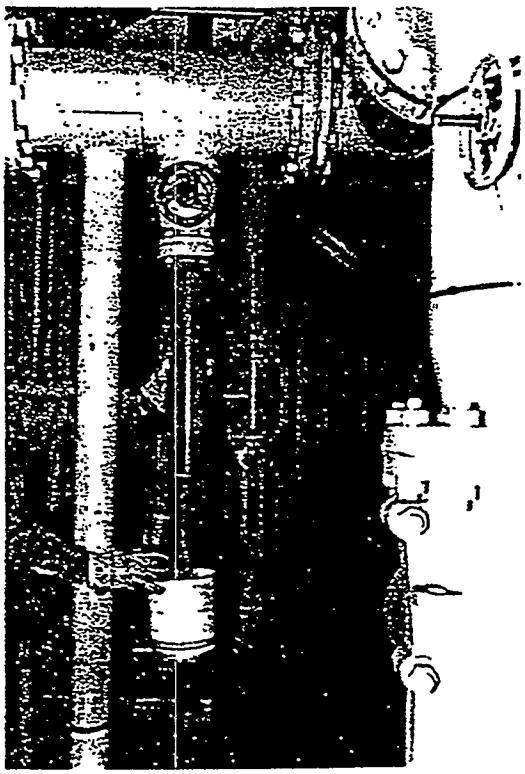

Figure 1-4. Thickener Overflow Sampling Location.

Gypsum By-Product

A conveyor belt transports the finished gypsum product from the dewatering building to the gypsum storage building. Gypsum samples are collected off of the conveyor belt through the use of a Ramsey 2100 Sweep Sampler (Figure 1-5). An interval timer specifies the time period in which to extract a sample of the material passing by on the belt. A mechanical arm sweeps the conveyor belt and directs the material through a feed chute and into a collecting receptacle. The sampler will not attempt to sweep the conveyor belt until the a significant load of gypsum is detected on the belt by a weight scale.

The gypsum is removed from the sampler's compositing container and passed through a riffler to reduce the sample size and to ensure a representative sample is collected from the sampling period. The piece of equipment is equipped with a vibrating mechanism to aid in passing the material through the riffler's chutes.

Free moisture analyses on gypsum samples are conducted as soon as the samples arrive at the FGD laboratory due to the stability of the moisture content of the material.

Process Water

Grab samples of process water are obtained from the main stream serving the FGD facility after passing through a strainer equipped with a 1/8 inch mesh screening (Figure 1-6). Process water is primarily used as make-up water for the absorber, wash water for the dewatering operation, and spray down of the mist eliminators . At the time of sampling, a drain valve located on the strainer is opened and water is allowed to blow down for a period of time prior to sampling. Samples of makeup water are collected and preserved for analysis in accordance with specifications found in Table 1-2.

Table 1-2. Process Water Sample Preservation

Parameter	Sample Type	Container	Preservative	Level
Cyanide, Sulfide	composite	poly bottle	NaOH (10 N)	pH > 12
Metals analyses	composite	poly bottle	HNO_3	0.5%
Nitrate	composite	poly bottle	H_2SO_4	0.2%
Oil and Grease	grab	glass jar	HCl (1:1)	5 ml.
Sulfite	grab	poly bottle	EDTA (2.5% w/v)	1 ml.

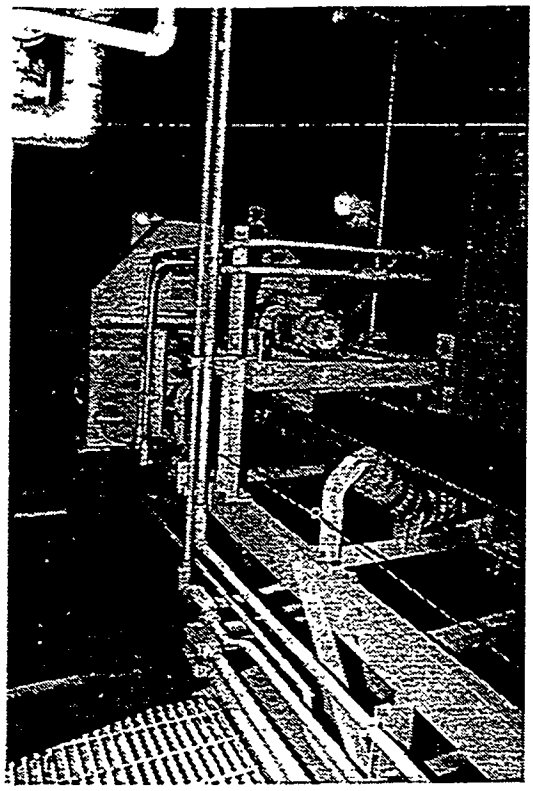

Figure 1-5. Ramsey Sweep Sampler and Gypsum Conveyor Belt Transporting Product to Storage Building.

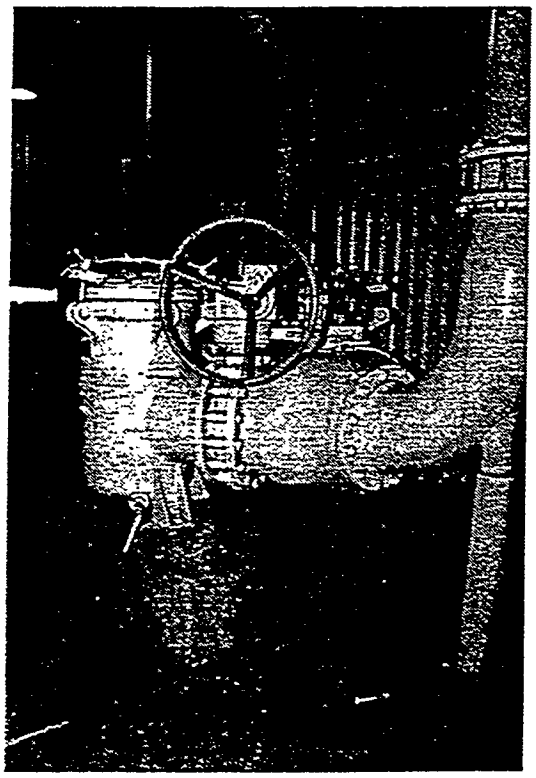

Figure 1-6. Process Water Sampling Location.

Wastewater Influent

An equalization tank acts as a holding vessel for process streams entering the wastewater treatment facility. Composite wastewater influent samples are drawn from a deep well located at the discharge of the forward feed pumps. These pumps provide forward flow to the wastewater treatment facility and are located between the equalization and neutralization tanks. A representative sample of the process stream can be obtained at this point because the equalization tank is well mixed and the influent has not yet undergone any chemical treatment.

An ISCO 3710 portable sampler (Figure 1-7) was programmed to generate composite wastewater influent samples. Uniform sample time intervals were used to configure the sampler. The ISCO sampler features an external liquid presence detector, a peristaltic pump and a patented pump revolution counting system which delivers accurate and repeatable sample volumes. Suction line rinsing assists in reducing sample cross contamination.

Upon completion of the sampling program, the collection bottle was removed from the sampler and the contents were well mixed. Portions of the composited sample were placed into appropriate containers and preserved in accordance with specifications found in Table 1-3.

Table 1-3. Wastewater Influent Sample Preservation

Parameter	Sample Type	Container	Preservative	Level
Cyanide, Sulfide	composite	poly bottle	NaOH (10 N)	pH > 12
Metals analyses	composite	poly bottle	HNO_3	0.5%
Oil and Grease	grab	glass jar	HCl (1:1)	5 ml.

Wastewater Effluent

Effluent from the wastewater treatment plant is composite sampled from a deep well pot located downstream from the discharge of the treated wastewater pumps. A valve controls the flow of this process stream into the main outfall of the utility.

An ISCO 3710 portable sampler (Figure 1-8) was configured to generate composite wastewater effluent samples. Uniform sample time intervals were used to program the sampler. The ISCO sampler features an external liquid presence detector, a peristaltic pump and a patented pump revolution counting system which delivers accurate and repeatable sample volumes. Suction line rinsing assists in reducing sample cross contamination.

Upon completion of the sampling program, the collection bottle was removed from the sampler and the contents were well mixed. Portions of the composited sample were placed into appropriate containers and preserved in accordance with specifications found in Table 1-4.

Table 1-4. Wastewater Effluent Sample Preservation

Parameter	Sample Type	Container	Preservative	Level
Cyanide, Sulfide	composite	poly bottle	NaOH (10 N)	pH > 12
Metals analyses	composite	poly bottle	HNO_3	0.5%
Oil and Grease	grab	glass jar	HCl (1:1)	5 ml.

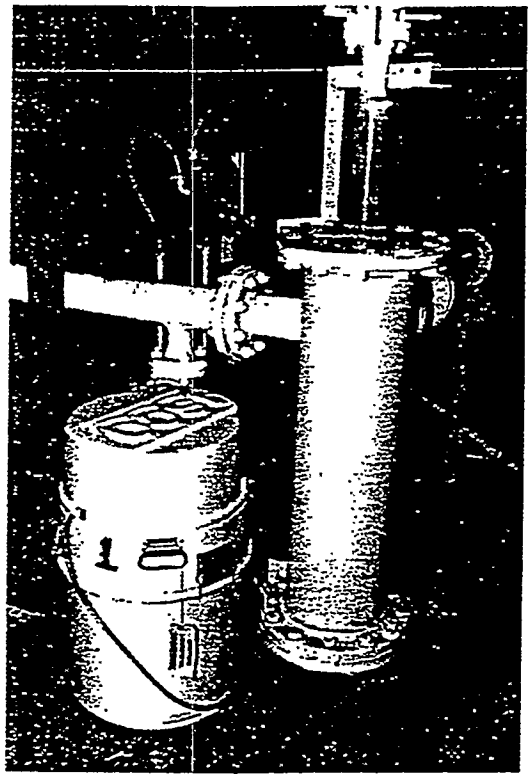

Figure 1-7. ISCO Sampler at Wastewater Influent Sampling Site.

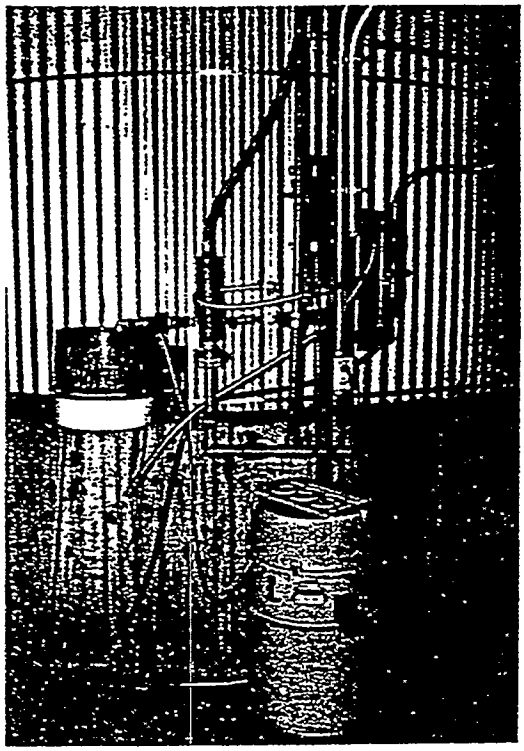

Figure 1-8. ISCO Sampler at Wastewater Effluent Sampling Site.

SECTION 6.2.2

ANALYTICAL METHODOLOGY

A description of the analytical techniques used to characterize the FGD process streams as outlined in the DOE Demonstration Test and Environmental Monitoring Plan (EMP) documents are included in this section.

The first portion of this section provides information on instrumental techniques used in the analytical characterization process. The second part identifies the analytical parameters which were evaluated in each of the process streams. Referenced analytical procedures and method summaries are provided, where applicable. A listing of reference sources which can be consulted to obtain detailed information on specific analytical procedures used in the evaluation process is provided at the end of the section.

Instrumental Procedures

This section provides a description of the types of major analytical instrumentation and sample preparation procedures used to characterize the raw materials, intermediates, and by-products from the Bailly FGD facility. Many of the method summaries found in the section on analytical methodology will reference these types of instrumental techniques.

X-ray Fluorescence (XRF)

X-ray fluorescence spectrometry[13] is a method used to determine the presence and concentration of chemical elements in solid samples. XRF can quantify most chemical elements in the range of 100 parts per million (ppm) to 100 wt.%. Accuracy is limited only by the calibration samples available and the software used to calculate results. XRF can also be used as a rapid cost-effective approach for scanning the sample to determine the presence of elements other than those of primary interest.

The basis of x-ray fluorescence is the relationship between the wavelength or energy of the x-ray photons emitted by the sample element and the atomic number. When an atom is bombarded with x-ray photons, an inner-orbital electron may be displaced leaving the atom in an excited state. The intensity of the emitted radiation is proportional to the concentration of the emitted element.

An X-ray spectrometer consists of three basic components: a primary source unit, spectrometer, and a detector. The primary source unit consists of a sealed X-ray tube and a stable high voltage generator. This X-ray tube delivers an intense source of radiation on the sample. A portion of the characteristic radiation generated is collected by the spectrometer and processed by the detection system.

Solid samples can be presented to the instrument in one of three ways: as-is, pressed powders, or fused discs. The fusion method provides the highest accuracy for a wide range of materials and is typically the method of choice.

Samples for the fusion process are appropriately dried, ground and homogenized, then passed through a sieve. The sample is placed in a crucible and ignited in a furnace at 950 °C. Lithium tetraborate, a fluxing agent, is added to the sample and the crucible is heated on a Claisse Fluxer for a period of time. The molten specimen is casted into a mold and allowed to solidify into a glass disc. The disc is then polished with a fine abrasive prior to analysis.

<u>X-ray Diffraction (XRD)</u>

Crystals in a sample act as a diffraction grating for X-rays due to the similarity of X-ray wavelengths used and distances between atomic planes in the crystals. Diffracted X-rays create a "pattern" unique to each crystal structure. The intensity of this pattern is proportional to the concentration of the crystal structure from which it originates.

XRD phase analysis[13] of fly ash and gypsum samples was carried out using a Philips PW 1720 diffractometer (CuK α) equipped with θ-compensating slit, graphite monochromator, gas proportional counter detector, pulse height selector, and a strip chart recorder.

The fly ash sample was processed to a fine powder (< 45 μm), packed in an Al sample holder and scanned from 65° to 5° 2θ at 1° 2θ per minute. Once the crystalline phase of interest had been detected, its strongest diffraction peak intensity was measured against that of α–quartz, a phase commonly present in fly ash. Then another mounting was prepared where 1% standard addition of that particular phase, using reagent grade material, was added and thoroughly blended with the fly ash. From the measured relative peak intensities at 0% and 1% standard addition, a straight line was drawn, and the amount of the phase of interest present in the fly ash was obtained by extrapolation.

In determining the limit of delectability of the phase of interest in the fly ash, incremental additions of reagent grade material were made to the fly ash until the strongest diffraction peak of that phase was detected.

Inductively Coupled Plasma Atomic Emission Spectroscopy (ICP-AES)

This instrumental technique allows for the simultaneous or sequential multielement determination of trace elements in solution. The basis of the method is the measurement of atomic emission by spectroscopic techniques. Samples are transported into the instrument as a liquid and converted to an aerosol through a nebulization process. The aerosol produced is transported into the center of a high temperature argon plasma torch where excitation and/or ionization occurs. The excited atoms and ions emit their characteristic radiation which is collected by transfer optics. Emission spectra are dispersed via a grating spectrometer and the intensities of the lines are monitored by photomultiplier tubes (PMT). Background correction is utilized to compensate for variable background contribution to the determination of trace elements. The electrical current measured at the anode of the PMT is converted into voltage which in turn is converted into a digital signal which can be used by computers for further processing.

Flame Atomic Absorption Spectroscopy (FAAS)

Metals in solution cab be quantitatively determined by atomic absorption spectroscopy (AAS). In AAS, a sample is aspirated through a nebulizer and atomized in a flame. An atom cloud is produced by supplying enough thermal energy to a sample to dissociate the chemical compounds into free atoms. Under the proper flame conditions, most of the atoms will remain in the ground state form. A light beam from a hallow cathode lamp is directed through the flame into a monochromator and then onto a detector which measures the amount of light absorbed. Absorption depends upon the presence of free unexcited ground state atoms in the flame. Since the wavelength of the light beam is characteristic of only the metal being determined, the light energy absorbed by the flame is a measure of the concentration of that metal in the sample. Beer's Law states that absorbance is directly proportional to the concentration of an absorbing species.

Graphite Furnace Atomic Absorption Spectroscopy (GFAAS)

The extreme sensitivity of graphite furnace analysis makes this instrument a technique of choice for applications where ultra-trace analysis is desired. Since graphite furnace requires only microliters of sample, this technique can be used when a limited quantity of sample is available.

The graphite furnace is a flameless sampling device. The energy required for atomization is supplied by passing a high electric current through a graphite tube into which the sample has been placed. The furnace sample area is aligned with a spectrophotometer and a light beam from a spectral lamp. The atomic vapor generated from a sample absorbs light from the lamp.

The basic difference between FAAS and GFAAS is the absorption response. In graphite furnace, the sample introduced into the graphite tube is totally consumed in a few seconds. This yields a transient peak-shaped absorption signal. The absorption signal for FAAS is steady state. In GFAAS, light absorption depends on the amount of analyte contained in the aliquot of sample injected into the graphite tube. The absorption peak height will indicate the amount of analyte present in the furnace which can be used to quantify the concentration present in the sample.

Particle Size Distribution - SediGraph® 5000E

The SediGraph® Particle Size Analyzer measures[13] the sedimentation rates, according to Stokes' law, of particles dispersed in a liquid and automatically plots this data as cumulative percent versus equivalent spherical diameter. The instrument uses a finely collimated beam of X-rays to measure the concentration of particles.

Prior to analyzing[13] gypsum or limestone samples, the samples are first dried then sieved to pass a No. 140 mesh sieve. Sample preparation for analysis involves dispersion of the powder in a Sedisperse liquid. Approximately 0.45 g of sample is dispersed ultrasonically in 25 ml of Sedisperse A12 liquid. The ultrasonic bath provides energy for dispersion of particles and also helps warm up the sample to the run temperature.

To perform the actual analysis, the operator calculates a rate, which is a function of the sample density and the viscosity and density of the liquid. Sample dispersion is placed in the cell compartment, and then is circulated though the cell and the recorder is adjusted to 100% concentration. Actuation of the "RUN" switch stops the pump and starts an automatic programmed analysis. Analysis of gypsum and limestone starts at 100μm and ends at 0.36μm.

Thermogravimetric Analyzer (TGA)

Thermogravimetric analysis[13] is performed using a LECO TGA-500. Gypsum samples undergoing thermogravimetric analysis are prepared by passing the wet sample through a #10 sieve. Dry grade air at a rate of 2 liters per minute begins to flow while the program ramps at a rate of 4°C per minute to a temperature of 45°C and remains until the samples have achieved a constant weight with a deviation of 0.05%. The result is the free water in the gypsum. The samples are then ramped at a rate of 10°C / min. to a temperature of 230°C and remains until constant weight is achieved with a 0.05 % deviation. This result yields the combined water of the gypsum and can be used to calculate the percent gypsum per ASTM C 471. The temperature then increases to 550°C at a rate of 99°C / minute and remains until constant weight is achieved with a 0.05 % deviation. The fourth step of the TGA program ramps to 950 °C at a rate of 99°C / min. and remains until constant weight is achieved with a deviation of 0.05 %. The difference between 550°C and 950 °C yields % CO_2 which can be expressed as carbonate.

GYPSUM BY-PRODUCT ANALYTICAL PROCEDURES

This section provides information on analytical procedures used to characterize by-product gypsum from the FGD operation. The section is comprised of five elements which include general metals analyses, gypsum wallboard manufacturer specifications, particle size distribution, hazardous waste classification, and radioactivity.

Acid Digestion for Metals Analysis

The digestion procedure for metals analyses of gypsum related materials was performed using a modification of ASTM C 471-87 (9)[2]. This procedure was used to prepare samples for analysis by atomic absorption spectroscopy. Certain exceptions to the above method did apply and modifications were carried out as required. An example would be the analysis of silver where HCl cannot be used in the digestion process.

A sample of 0.5 to 1.0 grams was added to a 25 ml of HCL (1:5) and heated with mixing for 15 minutes. Evaporation to dryness steps in the ASTM procedure were eliminated. The solution was further heated for 10 minutes after the addition of 50 ml of hot water. The solution was cooled and transferred to a 100 ml volumetric flask. Concentrated nitric acid (2 ml.) was added to the vessel and made to volume with deionized water.

GENERAL METALS ANALYSIS

The analytical methodology summarized in the general metals section provides a brief description of the techniques used for major, minor, and trace elemental characterization of gypsum manufactured at the Bailly FGD facility.

Table 2-1. Methods for General Metals Analyses of Gypsum

Parameter	Reference Method	Summary
Aluminum	See Instrumental Procedure Section.	X-ray Fluorescence Spectrometry.
Antimony	EPA SW-846 Method 7041[3]	Graphite furnace analysis at 217.6 nm with deuterium background correction. Ammonium nitrate was used as a chemical modifier.
Arsenic	EPA SW-846 Method 7060[3]	Modified graphite furnace analysis at 193.7 nm with deuterium background correction. Palladium in citric acid was used as a modifier.
Barium	EPA SW-846 Method 7080[3]	Flame atomic absorption analysis at 553.6 nm with a nitrous oxide-acetylene fuel rich flame. Potassium chloride was used as an ionization suppressant.
Beryllium	EPA SW-846 Method 7091[3]	Graphite furnace analysis at 234.9 nm with deuterium background correction.
Boron	CTL Method[13]	Calorimetric method utilizes the addition of quinalizarin solution to an acidified sample.
Cadmium	EPA SW-846 Method 7131[3]	Graphite furnace analysis at 228.8 nm with deuterium background correction. Ammonium phosphate was used as a modifier.
Calcium	See Instrumental Procedure Section.	X-ray Fluorescence Spectrometry.
	ASTM C 25 (36)[2]	Calcium is determined by EDTA titration in an alkaline solution after digestion in HCl. Insolubles are removed by filtration prior to analysis.

Table 2-1. Methods for General Metals Analyses of Gypsum (con.)

Parameter	Reference Method	Summary
Carbonate	See Instrumental Procedure Section.	Thermogravimetric Analysis.
	MHI Method WS-S-CO_2 (modified)[10]	Carbon dioxide is evolved from the decomposition of the sample in HCl. CO_2 is absorbed in a scrubbing solution of BaOH. The absorbing solution is back-titrated to determine carbonate concentration.
Chloride	ASTM C 114 (19)[2] (modified)	Silver-silver sulfide potentiometric measurement after nitric acid dissolution.
	Pure Air Method for Chloride[11]	Solid samples are slurried, heated, and stirred for 15 minutes. Liquid samples are diluted as required. Water soluble chloride is measured directly by ion selective electrode.
Chromium	EPA SW-846 Method 7190[3]	Flame atomic absorption analysis at 347.9 nm with a nitrous oxide-acetylene fuel rich flame.
Cobalt	EPA SW-846 Method 7201[3]	Modified graphite furnace analysis at 240.7 nm with a palladium in citric acid modifier solution.
Copper	Varian Analytical Methods[6]	Graphite furnace analysis at 324.8 nm with a palladium in citric acid modifier solution.
Cyanide	EPA SW-846 Method 9010[3]	Cyanide is evolved as hydrocyanic acid and collected in a sodium hydroxide scrubber. The solution is complexed with a pyridine reagent and measured colorimetrically.
Fluoride	PCA Test Method[13]	Ion selective electrode measurement technique. Sample was digested in HCl.
Iron	See Instrumental Procedure Section.	X-ray Fluorescence Spectrometry.

Table 2-1. Methods for General Metals Analyses of Gypsum (con.)

Parameter	Reference Method	Summary
Lead	EPA SW-846 Method 7420[3]	Flame Atomic Absorption Analysis at 283.3 nm with deuterium background correction. An oxidizing air-acetylene flame was used.
Lithium	Varian Analytical Methods[6]	Graphite furnace analysis at 670.8 nm with a palladium in citric acid modifier solution.
Magnesium	See Instrumental Procedure Section.	X-ray Fluorescence Spectrometry.
	ASTM C 25 (36)[2]	Sample is digestion in HCl and insolubles are removed by filtration. Magnesium is determined by EDTA titration in a pH 10 buffered solution.
Manganese	See Instrumental Procedure Section.	X-ray Fluorescence Spectrometry.
Mercury	EPA SW-846 Method 7471[3]	Cold vapor analysis at 253.7 nm. using stannous sulfate as a reductant. Digestion procedure includes aqua regia and potassium permanganate. Excess permanganate is reduced with sodium chloride-hydroxylamine sulfate.
Molybdenum	Varian Analytical Methods[6]	Graphite furnace analysis at 313.3 nm with a palladium in citric acid modifier solution.
Nickel	EPA SW-846 Method 7520[3]	Flame AA analysis with an oxidizing air-acetylene flame at 352.4 nm. and deuterium background correction.
Potassium	See Instrumental Procedure Section.	X-ray Fluorescence Spectrometry.
Selenium	EPA SW-846 Method 7740[3]	Modified graphite furnace analysis at 196.0 nm with deuterium background correction. Palladium in citric acid was used as a modifier.

Table 2-1. Methods for General Metals Analyses of Gypsum (con.)

Parameter	Reference Method	Summary
Silicon	See Instrumental Procedure Section.	X-ray Fluorescence Spectrometry.
	MHI Method WS-S-Si 01[10] and ASTM C 25 (10)[2]	Initial method collects SiO_2 and insoluble matter through repeated digestions in HCl. The sample is filtered and the residue is ignited and weighed. The ASTM method then volatilizes the silica from the previously ignited residue with hydrofluoric acid. The sample is dried at 1000°C for a few minutes, cooled, and weighed. The SiO_2 content is the difference in weight between the residues ratioed to the original mass of the sample.
Silver	EPA SW-846 Method 7761[3]	Flame AA analysis at 328.1 nm with an air-acetylene flame.
Sodium	See Instrumental Procedure Section.	X-ray Fluorescence Spectrometry.
Sulfate	ASTM C 471 (13)[2]	Sample is digested in HCl and the sulfate is precipitated with barium chloride. The sample is filtered, dried, and ignited. Gravimetric determination is based on recovery of barium sulfate.
	See Instrumental Procedure Section.	X-ray Fluorescence Spectrometry.
Sulfide (acid soluble)	ASTM C 114 (15.2)[2]	Sulfide as H_2S is liberated and captured in a solution of zinc sulfate. This form of sulfur is titrated with potassium iodate.
Sulfide (pyritic)	ASTM D 2492 (7)[1]	Sample is treated with nitric acid after removal of all acid soluble (HCl) and iron. Iron is measured by FAAS and sulfide from the pyrite is calculated stoicheometrically.

Table 2-1. Methods for General Metals Analyses of Gypsum (con.)

Parameter	Reference Method	Summary
Sulfite	EPRI Method 40[7]	Sample is added to a known amount of excess iodine solution and buffered with sodium acetate. A back-titrated with sodium thiosulfate determines sulfite levels.
Titanium	See Instrumental Procedure Section.	X-ray Fluorescence Spectrometry.
Tin	Varian Analytical Methods[6]	Graphite furnace analysis with palladium in citric acid modifier.
Uranium		Radiochemical technique analyzes for alpha-emitting nuclides with an alpha spectrometer using isotope dilution methods.
Vanadium	Varian Analytical Methods[6]	Graphite furnace analysis at 318.5 nm with a palladium citric acid modifier.
Zinc	SW-846 Method 7950[3]	Flame AA analysis at 213.9 nm with an air-acetylene flame.

GYPSUM WALLBOARD MANUFACTURER SPECIFICATIONS

The chemical composition of the gypsum by-product is assayed to determine the suitability of the material for wallboard manufacturing purposes. The parameters found in the following table are those of common interest to the wallboard manufacturing industry.

Table 2-2. Analytical Methods for Gypsum Wallboard Manufacturing

Parameter	Reference Method	Summary
Gypsum Purity ($CaSO_4 \cdot 2H_2O$)		Gypsum composition for contractual purposes is defined as the summation of wt. % values for combined water, calcium, and sulfate.
Calcium	See Instrumental Procedure Section.	X-ray Fluorescence Spectrometry.
	ASTM C 25 (36)[2]	Calcium is determined by EDTA titration in an alkaline solution after digestion in HCl. Insolubles are removed by filtration prior to analysis.
Sulfate	See Instrumental Procedure Section.	X-ray Fluorescence Spectrometry.
	ASTM C 471 (13)[2]	Sample is digested in HCl and the sulfate is precipitated with barium chloride. The sample is filtered, dried, and ignited. Gravimetric determination is based on recovery of barium sulfate.
Combined Water	ASTM C 471 (7)[2]	Oven dried (forced air) at 230°C to constant weight.
Calcium Sulfite Hemihydrate ($CaSO_3 \cdot 1/2\ H_2O$)	EPRI Method 40[7]	Sample is added to a known amount of excess iodine solution, buffered with sodium acetate and back-titrated with sodium thiosulfate. Endpoint is determined when the blue color from the starch has dissipated.

Table 2-2. Analytical Methods for Gypsum Wallboard Manufacturing (con.)

Parameter	Reference Method	Summary
Silica (SiO_2)	See Instrumental Procedure Section.	X-ray Fluorescence Spectrometry.
	MHI Method WS-S-Si 01[10] and ASTM C 25 (10)[2]	Initial method collects SiO_2 and insoluble matter through repeated digestions in HCl. The sample is filtered and the residue is ignited and weighed. The ASTM method then volatilizes the silica from the previously ignited residue with hydrofluoric acid. The sample is dried at 1000°C for a few minutes, cooled, and weighed. The SiO_2 content is the difference in weight between the residues ratioed to the original mass of the sample.
Iron	See Instrumental Procedure Section.	X-ray Fluorescence Spectrometry.
	MHI Method WS-S-Fe 03[10]	Colorimetric technique which digests the sample in HCl and reduces the iron with hydroxylamine hydrochloride. The solution is neutralized and the iron is complexed with o-phenanthroline.
Aluminum	See Instrumental Procedure Section.	X-ray Fluorescence Spectrometry.
	MHI Method WS-S-Al 03[10]	Sample is digested in hot aqua regia, taken to dryness, and dissolved in HCl. The solution is buffered and aluminon is added to complex the aluminum. The intensity of the red-colored complex is proportional to the aluminum concentration.
Total Metal Oxides (R_2O_3)		Calculation based on the sum of separate determinations of iron and aluminum by XRF or wet chemical analyses.

Table 2-2. Analytical Methods for Gypsum Wallboard Manufacturing (con.)

Parameter	Reference Method	Summary
pH	USG Method 113A[12]	Oven dry sample at 45°C overnight, pass through 100 mesh screen and redry for 2 hrs. Add 100 ml DI water to 10 g. of sample, cover, and measure with pH probe after 15 minutes.
Free Moisture	ASTM C 471 (6)[2]	Oven dried (forced air) at 45°C to constant weight.
Chloride	ASTM C 114 (19)[2] (modified)	Silver-silver sulfide potentiometric measurement after nitric acid dissolution.
	Pure Air Method for Chloride[11]	Solid samples are slurried, heated, and stirred for 15 minutes. Liquid samples are diluted as required. Water soluble chloride is measured directly by ion selective electrode.
Water Soluble Salts	USG-AA Method for Water Soluble Salts[12]	Calculation based upon moles of Na^+, K^+, and Mg^{++} that are available to combine with Cl^- and $SO4^{2-}$. Cations are quantified by a water soluble extraction method with subsequent analysis by FAAS.
Mean Particle Size	Sedigraph 5000E	Equivalent spherical diameter obtained from a X-Ray sedimentation particle size distribution curve at a cumulative mass of 50 %.

PARTICLE SIZE ANALYSIS

Particle size data of interest is obtained from a distribution curve generated by a Sedigraph 5000E sedimentation instrument. The particle size analyzer provides output in the form of a graph which plots equivalent spherical diameter versus cumulative mass percent. Further details on this technique can be found in the section on instrumental procedures.

TCLP METHODS

The TCLP methods employed for gypsum characterization were designed to determine the mobility of inorganic analytes present in this solid waste. EPA SW-846 Method 1311 outlines the procedures which are required to prepare the sample for analysis. The solid waste is extracted with acetic acid or an acetic acid / sodium hydroxide solution depending on the pH of the solid phase. The 20:1 extraction takes place over a period of 18 hrs. on a rotary agitator. The slurry is filtered and the filtrate is defined as the TCLP extract. This extract is used as the sample in the analytical procedures listed below.

Table 2-3. Gypsum TCLP Analytical Methods

Parameter	Reference Method	Summary
Arsenic	EPA SW-846 Method 6010[3]	Inductively coupled plasma atomic emission spectroscopy measured at a wavelength of 193.696 nm.
Barium	EPA SW-846 Method 6010[3]	Inductively coupled plasma atomic emission spectroscopy measured at a wavelength of 455.403 nm.
Cadmium	EPA SW-846 Method 6010[3]	Inductively coupled plasma atomic emission spectroscopy measured at a wavelength of 226.502 nm.
Corrosivity-pH	EPA SW-846 Method 9045[3]	An electrochemical procedure which measures the pH of the supernatant portion of a 1:1 dispersion of a sample in high purity water.
Chromium	EPA SW-846 Method 6010[3]	Inductively coupled plasma atomic emission spectroscopy measured at a wavelength of 267.716nm.
Mercury	EPA SW-846 Method 7470[3]	Mercury is reduced to the elemental form and is aerated from solution. The vapor passes through a closed system and into the light path of an AA spectrophotometer. Absorbance is measured at 253.7 nm. as a function of concentration.

Table 2-3. Gypsum TCLP Analytical Methods (con.)

Parameter	Reference Method	Summary
Ignitability	40 CFR 261.21[5]	Vigorous and persistent burning when sample is ignited.
Lead	EPA SW-846 Method 6010[3]	Inductively coupled plasma atomic emission spectroscopy measured at a wavelength of 220.353 nm.
Reactive Cyanide	EPA SW-846 Method 9010[3]	Cyanide is evolved as hydrocyanic acid and collected in a sodium hydroxide scrubber. The solution is complexed with a pyridine reagent and measured colorimetrically.
Reactive Sulfide	EPA SW-846 Method 9030[3]	Sample is pretreated with zinc acetate. Hydrogen sulfide is evolved through acidification in a closed system. Analysis is performed using an iodine sodium-thiosulfate back titration.
Selenium	EPA SW-846 Method 6010[3]	Inductively coupled plasma atomic emission spectroscopy measured at a wavelength of 196.026 nm.
Silver	EPA SW-846 Method 6010[3]	Inductively coupled plasma atomic emission spectroscopy measured at a wavelength of 328.068 nm.
Total Solids	Std. Method 209 F[9]	Solid samples are dried to a constant weight at 103-105 ^{o}C.

INDIANA NEUTRAL LEACHATE TEST

The purpose of The Indiana Neutral Leachate Test (INLT) test is to provide further characterization of the waste stream for waste classification purposes. The Indiana Department of Environmental Management has identified maximum permissible levels for certain water soluble constituents which may be present in the waste stream. The INLT sample preparation procedure is identical to that of the TCLP Method 1311 except for the type of fluid used in the extraction process. Deionized water is substituted for the acetic acid solutions that are used in the TCLP extraction. All other procedures found in Method 1311 are carried out. This extract is then subjected to the following analytical procedures.

Table 2-4. Indiana Neutral Leachate Methods for Gypsum

Parameter	Reference Method	Summary
Barium	EPA SW-846 Method 7080[3]	Atomic absorption spectroscopy at 553.6 nm. with a nitrous oxide/ acetylene flame and KCl as an ionization suppressant.
Boron	EPA Method 200.7[4]	Inductively coupled plasma atomic emission spectroscopy.
Chloride	Std. Method 407 B[9]	Mercuric nitrate titration. Chloride is titrated with mercuric nitrate to form a soluble, slightly dissociated mercuric chloride. Endpoint is determined by a purple complex resulting from the presence of diphenylcarbazone with excess mercuric ions.
Copper	EPA SW-846 Method 7210[3]	Atomic absorption spectroscopy at 324.7 nm. with a lean oxidizing flame.
Cyanide (Amenable)	EPA Method 335.1[4]	Sample is chlorinated at pH > 11 to decompose cyanide. EPA Method 335.2 (total cyanide) is then used for the determination.

Table 2-4. Indiana Neutral Leachate Methods for Gypsum (con.)

Parameter	Reference Method	Summary
Cyanide (Total)	EPA Method 335.2[4]	Cyanide is evolved as hydrocyanic acid and collected in a sodium hydroxide scrubber. The solution is either titrated with silver nitrate or complexed with a pyridine reagent and measured colorimetrically.
Fluoride	EPA method 340.1[4]	Sample is distilled and the fluoride is reacted with a SPADNS reagent. Loss of color is measured colorimetrically and is a function of fluoride level.
Iron	EPA SW-846 Method 7380[3]	Atomic absorption spectroscopy at 248.3 nm. with a lean oxidizing flame and background correction.
Manganese	EPA SW-846 Method 7460[3]	Atomic absorption spectroscopy at 279.5 nm. with a lean oxidizing flame and background correction.
Nickel	EPA SW-846 Method 7520[3]	Atomic absorption spectroscopy at 232.0 nm. with a lean oxidizing flame and background correction.
pH	EPA Method 150.1[4]	Hydrogen ion activity is measured potentiometrically using a glass and reference electrode.
Phenolics (Total)	EPA Method 420.1[4]	Formation of a red-brown anti-pyrine dye is measured colorimetrically and the color produced is a function of phenolic material.
Sodium	EPA SW-846 Method 7770[3]	Atomic absorption spectroscopy at 589.6 nm. with a lean oxidizing flame. The use of an ionization suppressant is recommended.
Sulfate	EPA Method 375.4[4]	Turbidimetric method reacts sample with barium chloride to precipitate barium sulfate. Absorbance is measured with a spectrophotometer and plotted on a calibration curve of known sulfate standards.

Table 2-4. Indiana Neutral Leachate Methods for Gypsum (con.)

Parameter	Reference Method	Summary
Sulfides (Total)	Std. Method 427 C[9]	Sulfide, ferric chloride, and dimethyl-p-phenylenediamine are reacted to produce methyene blue. Ammonium phosphate is added to remove color due to ferric chloride. Absorbance is measured with a spectrophotometer.
TDS	EPA Method 160.1[4]	Sample is filtered through a glass fiber filter. The filtrate is evaporated and dried to a constant weight at 180 ^{o}C.
Zinc	EPA SW-846 Method 7950[3]	Atomic absorption spectroscopy at 213.9 nm. with a lean oxidizing flame and background correction.

RADIOACTIVITY

Gypsum radioactivity parameters itemized in Table 2-5 were evaluated to address potential environmental concerns. Teledyne Isotopes, a reputable contract laboratory providing analytical services in the field of radioactivity, performed the studies on the gypsum material produced at the Bailly FGD facility.

Table 2-5. Radioactivity Methods for Gypsum

Parameter	Reference Method	Summary
Gross Alpha		Sample is dispersed on a ringed planchet, counted in a proportional counter, and concentrations of gross alpha are calculated.
Gross Beta		Sample is dispersed on a ringed planchet, counted in a proportional counter, and concentrations of gross beta are calculated.
Radium -226		Barium carrier is added to an acidified sample where radium is initially separated on lead sulfate then barium sulfate. Ra-226 is determined by emanation method.
Lead-210		Radiochemical determination by separating daughter product Bi-210 and assaying its beta activity in a low level gas proportional counter.
Polonium-210		Sample is plated on a copper disc from an acidified solution. The disc is analyzed using an alpha spectrometer.
Thorium-230		Radiochemical technique analyzes for alpha-emitting nuclides with an alpha spectrometer using isotope dilution methods.
Radon-222		Solid sample is sealed and heated for 28 days then counted.

PROCESS SLURRY ANALYTICAL PROCEDURES

Analytical methods used to monitor daily process performance are summarized in the following section. The process areas of interest include filtrate sump, thickener overflow, thickener underflow, gypsum by-product, and absorber operations. The methods summarized in Table 2-6 are directed towards procedures which are performed on-site at the Bailly FGD laboratory. XRF methods[13] were used to provide results on trace metals analyses (Fe, Al, Mn, Si, Na, K) on samples acquired from these process streams during Demonstration Test #3.

Table 2-6. FGD Process Stream Analytical Methods

Parameter	Reference Method	Summary
Wt. % Solids	EPRI Method 13[7]	Gravimetric procedure vacuum filters a known amount of slurry and dries the filter cake at 45°C for three hours.
Density	EPRI Method 10[7]	Calibrated volumetric flask is filled with slurry and weighed. Mass of the slurry is divided by the flask volume.
Chloride	Pure Air Method for Chloride[11]	Solid samples are slurried, heated, and stirred for 15 minutes. Liquid samples are diluted as required. Water soluble chloride is measured directly by ion selective electrode.
Fluoride	Pure Air Method for Fluoride[11]	Solid samples are slurried, acidified with HNO_3, and heated/stirred for 15 minutes. Slurries are analyzed directly. After cooling, fluoride levels are determined potentiometrically by ion selective electrode.
Calcium	ASTM C 25 (36)[2]	Calcium is determined by EDTA titration in an alkaline solution after digestion in HCl. Insolubles are removed by filtration prior to analysis.

Table 2-6. FGD Process Stream Analytical Methods (con.)

Parameter	Reference Method	Summary
Carbonate	MHI Method WS-S-CO_2 (modified)[10]	Carbon dioxide is evolved from the decomposition of the sample in HCl. CO_2 is absorbed in a scrubbing solution of BaOH. The absorbing solution is back-titrated to determine carbonate concentration.
Magnesium	ASTM C 25 (36)[2]	Sample is digestion in HCl and insolubles are removed by filtration. Magnesium is determined by EDTA titration in a pH 10 buffered solution.
Silica	MHI Method WS-S-Si 01[10] and ASTM C 25 (10)[2]	Initial method collects SiO_2 and insoluble matter through repeated digestions in HCl. The sample is filtered and the residue is ignited and weighed. The ASTM method then volatilizes the silica from the previously ignited residue with hydrofluoric acid. The sample is dried at 1000°C for a few minutes, cooled, and weighed. The SiO_2 content is the difference in weight between the residues ratioed to the original mass of the sample.
Iron	MHI Method WS-S-Fe 03[10]	Colorimetric technique which digests the sample in HCl and reduces the iron with hydroxylamine hydrochloride. The solution is neutralized and the iron is complexed with o-phenanthroline.
Aluminum	MHI Method WS-S-Al 03[10]	Sample is digested in hot aqua regia, taken to dryness, and dissolved in HCl. The solution is buffered and aluminon is added to complex the aluminum. The intensity of the red-colored complex is proportional to the aluminum concentration.
pH	USG Method 113A[12]	Oven dry sample at 45°C overnight, pass through 100 mesh screen and redry for 2 hrs. Add 100 ml DI water to 10 g. of sample, cover, and measure with pH probe after 15 minutes.

Table 2-6. FGD Process Stream Analytical Methods (con.)

Parameter	Reference Method	Summary
Sulfite (solid samples)	EPRI Method 40[7]	Sample is added to a known amount of excess iodine solution, buffered with sodium acetate and back-titrated with sodium thiosulfate. Endpoint is determined when the blue color from the starch has dissipated.
Sulfite (liquid samples)	MHI Method WS-A-SO_3[10]	Sample is collected in a known amount of excess iodine solution, acidified, The sample is back-titrated with sodium thiosulfate in the presence of starch to determine the endpoint.

LIMESTONE ANALYTICAL PROCEDURES

This section provides information on analytical procedures which characterizes limestone used at the Bailly facility. Limestone is consumed as a raw material in the FGD operation. This methods section is comprised of three elements which include general metals analyses, particle size distribution, and radioactivity.

Acid Digestion for Metals Analysis

The digestion procedure for metals analyses of limestone was performed using a modification of ASTM C 471-87 (9)[2]. This procedure was used to prepare samples for analysis by atomic absorption spectroscopy. Certain exceptions to the above method did apply and modifications were carried out as required. An example would be the analysis of silver where HCl cannot be used in the digestion process.

A sample of 0.5 to 1.0 grams was added to a 25 ml of HCL (1:5) and heated with mixing for 15 minutes. Evaporation to dryness steps in the ASTM procedure were eliminated. The solution was further heated for 10 minutes after the addition of 50 ml of hot water. The solution was cooled and transferred to a 100 ml volumetric flask. Concentrated nitric acid (2 ml.) was added to the vessel and made to volume with deionized water.

GENERAL METALS ANALYSIS

The analytical methodology summarized in the general metals section provides a brief description of the techniques used for major, minor, and trace elemental characterization of limestone used at the Bailly FGD facility.

Table 2-7. Methods for General Metals Analyses of Limestone

Parameter	Reference Method	Summary
Aluminum	See Instrumental Procedure Section.	X-ray Fluorescence Spectrometry.
Antimony	EPA SW-846 Method 7041[3]	Graphite furnace analysis at 217.6 nm with deuterium background correction. Ammonium nitrate was used as a chemical modifier.
Arsenic	EPA SW-846 Method 7060[3]	Modified graphite furnace analysis at 193.7 nm with deuterium background correction. Palladium in citric acid was used as a modifier.
Barium	EPA SW-846 Method 7080[3]	Flame atomic absorption analysis at 553.6 nm with a nitrous oxide-acetylene fuel rich flame. Potassium chloride was used as an ionization suppressant.
Beryllium	EPA SW-846 Method 7091[3]	Graphite furnace analysis at 234.9 nm with deuterium background correction.
Boron	CTL Method[13]	Colorimetric method utilizes the addition of quinalizarin solution to an acidified sample.
Cadmium	EPA SW-846 Method 7131[3]	Graphite furnace analysis at 228.8 nm with deuterium background correction. Ammonium phosphate was used as a modifier.
Calcium	See Instrumental Procedure Section.	X-ray Fluorescence Spectrometry.
	ASTM C 25 (36)[2]	Calcium is determined by EDTA titration in an alkaline solution after digestion in HCl. Insolubles are removed by filtration prior to analysis.
Carbonate	See Instrumental Procedure Section.	Thermogravimetric Analysis.
Chloride	ASTM C 114 (19) (modified)[2]	Silver-silver sulfide potentiometric measurement after nitric acid dissolution.

Table 2-7. Methods for General Metals Analyses of Limestone (con.)

Parameter	Reference Method	Summary
Chromium	EPA SW-846 Method 7190[3]	Flame atomic absorption analysis at 347.9 nm with a nitrous oxide-acetylene fuel rich flame.
Cobalt	EPA SW-846 Method 7201[3]	Modified graphite furnace analysis at 240.7 nm with a palladium in citric acid modifier solution.
Copper	Varian Analytical Methods[6]	Graphite furnace analysis at 324.8 nm with a palladium in citric acid modifier solution.
Cyanide	EPA SW-846 Method 9010[3]	Cyanide is evolved as hydrocyanic acid and collected in a sodium hydroxide scrubber. The solution is complexed with a pyridine reagent and measured colorimetrically.
Fluoride	PCA Test Method[13]	Ion selective electrode measurement technique. Sample was digested in HCl.
Iron	See Instrumental Procedure Section.	X-ray Fluorescence Spectrometry.
Lead	EPA SW-846 Method 7420[3]	Flame Atomic Absorption Analysis at 283.3 nm with deuterium background correction. An oxidizing air-acetylene flame was used.
Lithium	Varian Analytical Methods[6]	Graphite furnace analysis at 670.8 nm with a palladium in citric acid modifier solution.
Magnesium	See Instrumental Procedure Section.	X-ray Fluorescence Spectrometry.
	ASTM C 25 (36)[2]	Sample is digestion in HCl and insolubles are removed by filtration. Magnesium is determined by EDTA titration in a pH 10 buffered solution.
Manganese	See Instrumental Procedure Section.	X-ray Fluorescence Spectrometry.

Table 2-7. Methods for General Metals Analyses of Limestone (con.)

Parameter	Reference Method	Summary
Mercury	EPA SW-846 Method 7471[3]	Cold vapor analysis at 253.7 nm. using stannous sulfate as a reductant. Digestion procedure includes aqua regia and potassium permanganate. Excess permanganate is reduced with sodium chloride-hydroxylamine sulfate.
Molybdenum	Varian Analytical Methods[6]	Graphite furnace analysis at 313.3 nm with a palladium in citric acid modifier solution.
Nickel	EPA SW-846 Method 7520[3]	Flame AA analysis with an oxidizing air-acetylene flame at 352.4 nm. and deuterium background correction.
Nitrate	EPA Method 353.2[4]	Sample is extracted with hot water and a colorimetric cadmium reduction method is performed.
Potassium	See Instrumental Procedure Section.	X-ray Fluorescence Spectrometry.
Selenium	EPA SW-846 Method 7740[3]	Modified graphite furnace analysis at 196.0 nm with deuterium background correction. Palladium in citric acid was used as a modifier.
Silicon	See Instrumental Procedure Section.	X-ray Fluorescence Spectrometry.
Silver	EPA SW-846 Method 7761[3]	Flame AA analysis at 328.1 nm with an air-acetylene flame.
Sodium	See Instrumental Procedure Section.	X-ray Fluorescence Spectrometry.
Sulfate	ASTM C 25 (25)[2]	Sample is digested in HCl and the sulfate is precipitated with barium chloride. The sample is filtered, dried, and ignited. Gravimetric determination is based on recovery of barium sulfate.
	See Instrumental Procedure Section.	X-ray Fluorescence Spectrometry.

Table 2-7. Methods for General Metals Analyses of Limestone (con.)

Parameter	Reference Method	Summary
Sulfide (acid soluble)	ASTM C 114 (15.2)[2]	Sulfide as H_2S is liberated and captured in a solution of zinc sulfate. This form of sulfur is titrated with potassium iodate.
Sulfide (pyritic)	ASTM D 2492 (7)[1]	Sample is treated with nitric acid after removal of all acid soluble (HCl) sulfide and iron. Iron is measured by FAAS and sulfide from the pyrite is calculated stoicheometrically.
Sulfite (solid samples)	EPRI Method 40[7]	Sample is added to a known amount of excess iodine solution, buffered with sodium acetate and back-titrated with sodium thiosulfate. Endpoint is determined when the blue color from the starch has dissipated.
Titanium	See Instrumental Procedure Section.	X-ray Fluorescence Spectrometry.
Tin	Varian Analytical Methods[6]	Graphite furnace analysis with palladium in citric acid modifier.
Uranium		Radiochemical technique analyzes for alpha-emitting nuclides with an alpha spectrometer using isotope dilution methods.
Vanadium	Varian Analytical Methods[6]	Graphite furnace analysis at 318.5 nm with a palladium citric acid modifier.
Zinc	EPA SW-846 Method 7950[3]	Flame AA analysis at 213.9 nm with an air-acetylene flame.

PARTICLE SIZE ANALYSIS

Particle size data of interest is obtained from a distribution curve generated by a Sedigraph 5000E sedimentation instrument. The particle size analyzer provides output in the form of a graph which plots equivalent spherical diameter versus cumulative mass percent. Further details on this technique can be found in the instrumental procedures section.

RADIOACTIVITY

Limestone radioactivity parameters itemized in Table 2-8 were evaluated to address potential environmental concerns. Teledyne Isotopes, a reputable contract laboratory providing analytical services in the field of radioactivity, performed the studies on the limestone consumed at the Bailly FGD facility.

Table 2-8. Radioactivity Methods for Limestone

Parameter	Reference Method	Summary
Gross Alpha		Sample is dispersed on a ringed planchet, counted in a proportional counter, and concentrations of gross alpha are calculated.
Gross Beta		Sample is dispersed on a ringed planchet, counted in a proportional counter, and concentrations of gross beta are calculated.
Radium -226		Barium carrier is added to an acidified sample where radium is initially separated on lead sulfate then barium sulfate. Ra-226 is determined by emanation method.
Lead-210		Radiochemical determination by separating daughter product Bi-210 and assaying its beta activity in a low level gas proportional counter.
Polonium-210		Sample is plated on a copper disc from an acidified solution. The disc is analyzed using an alpha spectrometer.
Thorium-230		Radiochemical technique analyzes for alpha-emitting nuclides with an alpha spectrometer using isotope dilution methods.
Radon-222		Solid sample is sealed and heated for 28 days then counted.

COAL ANALYTICAL PROCEDURES

This section provides information on analytical procedures used to characterize coal burned at the utility. Demonstration Test #3 burned coal that is typically used at the Bailly Generating Station. The section on coal analysis is comprised of four elements which include general metals analyses, proximate analysis, ultimate analysis, and radioactivity.

Digestion for Metals Analyses

The digestion procedure for metals analyses of coal samples was carried out using ASTM D 3682 (7,8)[1]. This procedure was used to prepare samples for analysis by flame or graphite furnace atomic absorption spectroscopy. Certain exceptions did apply and modifications to the above method were carried out as necessary.

An air dried coal sample was ground to pass a 250 μm mesh screen and ignited first at 500°C then at 750°C. The ash was then blended with lithium tetraborate and fused at 1000°C. After fusing, the flux was dissolved in 5% HCl on a stirring hotplate, cooled, and diluted to a working volume. This solution was then analyzed for metals as specified in the methods listed below.

GENERAL METALS ANALYSIS

The analytical methodology summarized in the general metals section provides a brief description of the techniques used for major, minor, and trace elemental characterization of coal burned at Northern Indiana's Bailly Generating Station.

Table 2-9. Methods for General Metals Analyses of Coal

Parameter	Reference Method	Summary
Aluminum	ASTM D 3682 (10)[1]	Sample is ignited, fused with lithium tetraborate, and dissolved in HCl. Analysis performed by atomic absorption spectroscopy at 309.2 nm.
Antimony	ASTM D 3682[1]	Sample is ignited, fused with lithium tetraborate, and dissolved in HCl. Analysis performed by atomic absorption spectroscopy at 217.6 nm.
Arsenic	ASTM D 3684 (digestion only)[1]	Oxygen bomb combustion with absorption in dilute nitric acid. Analyzed by graphite furnace atomic absorption spectroscopy at 193.7 nm.
Barium	ASTM D 3682[1]	Sample is ignited, fused with lithium tetraborate, and dissolved in HCl. Analysis performed by atomic absorption spectroscopy at 553.6 nm.
Beryllium	ASTM D 3682[1]	Sample is ignited, fused with lithium tetraborate, and dissolved in HCl. Analysis performed by atomic absorption spectroscopy at 234.9 nm.
Boron	ASTM D 3684 (digestion only)[1]	Oxygen bomb combustion with absorption in dilute hydrochloric acid. Boron quantified by curcumin colorimetric procedure (EPA 212.3).
Cadmium	ASTM D 3682[1]	Sample is ignited, fused with lithium tetraborate, and dissolved in HCl. Analysis performed by atomic absorption spectroscopy at 309.2 nm.
Calcium	ASTM D 3682 (12)[1]	Sample is ignited, fused with lithium tetraborate, and dissolved in HCl. Analysis performed by atomic absorption spectroscopy at 228.8 nm.
Carbonate	ASTM D 3174 (modified)[1]	Calculation based on the weight loss obtained from 700 to 950 °C.

Table 2-9. Methods for General Metals Analyses of Coal (con.)

Parameter	Reference Method	Summary
Chloride	ASTM D 4208[1]	Oxygen bomb combustion with absorption of the chloride in dilute sodium carbonate. Absorbing solution analyzed for chloride levels by ion selective electrode.
Chromium	ASTM D 3682[1]	Sample is ignited, fused with lithium tetraborate, and dissolved in HCl. Analysis performed by atomic absorption spectroscopy at 357.9nm.
Cobalt	ASTM D 3682[1]	Sample is ignited, fused with lithium tetraborate, and dissolved in HCl. Analysis performed by atomic absorption spectroscopy at 240.7 nm.
Copper	ASTM D 3682[1]	Sample is ignited, fused with lithium tetraborate, and dissolved in HCl. Analysis performed by atomic absorption spectroscopy at 324.8 nm.
Cyanide	Std. Method 4500-CN C,E[8]	Cyanide is evolved as hydrocyanic acid and collected in a sodium hydroxide scrubber. The solution is complexed with a pyridine reagent and measured colorimetrically.
Fluoride	ASTM D 3761[1]	Oxygen bomb combustion with absorption of the fluorine in dilute sodium hydroxide. Absorbing solution analyzed for fluoride levels by ion selective electrode.
Iron	ASTM D 3682 (11)[1]	Sample is ignited, fused with lithium tetraborate, and dissolved in HCl. Analysis performed by atomic absorption spectroscopy at 248.3 nm.
Lead	ASTM D 3684 (digestion only)[1]	Oxygen bomb combustion with absorption in dilute nitric acid. Analyzed by flame atomic absorption spectroscopy at 283.3nm.

Table 2-9. Methods for General Metals Analyses of Coal (con.)

Parameter	Reference Method	Summary
Lithium	ASTM D 3684 (digestion only)[1]	Oxygen bomb combustion with absorption in dilute nitric acid. Analyzed by flame atomic absorption spectroscopy at 670.8 nm.
Magnesium	ASTM D 3682 (13)[1]	Sample is ignited, fused with lithium tetraborate, and dissolved in HCl. Analysis performed by atomic absorption spectroscopy at 285.1 nm.
Manganese	ASTM D 3682 (17)[1]	Sample is ignited, fused with lithium tetraborate, and dissolved in HCl. Analysis performed by atomic absorption spectroscopy at 279.5 nm.
Mercury	ASTM D 3684[1]	Oxygen bomb combustion with absorption in dilute nitric acid. Quantified by flameless cold vapor atomic absorption technique.
Molybdenum	ASTM D 3684 (digestion only)[1]	Oxygen bomb combustion with absorption in dilute nitric acid. Analyzed by flame atomic absorption spectroscopy at 313.3 nm.
Nickel	ASTM D 3682[1]	Sample is ignited, fused with lithium tetraborate, and dissolved in HCl. Analysis performed by atomic absorption spectroscopy at 232.0 nm.
Nitrate	EPA Method 352.1[4]	A water soluble digestion is followed by filtration. The extract is acidified, reacted with brucine sulfate, and placed in a hot water bath. Absorption of the resulting color complex is measured by a spectrophotometer.
Potassium	ASTM D 3682 (15)[1]	Sample is ignited, fused with lithium tetraborate, and dissolved in HCl. Analysis performed by atomic absorption spectroscopy at 766.5 nm.

Table 2-9. Methods for General Metals Analyses of Coal (con.)

Parameter	Reference Method	Summary
Selenium	ASTM D 3684 (digestion only)[1]	Oxygen bomb combustion with absorption in dilute nitric acid. Analyzed by graphite furnace atomic absorption spectroscopy at 196.0 nm.
Silicon	ASTM D 3682 (9)[1]	Sample is ignited, fused with lithium tetraborate, and dissolved in HCl. Analysis performed by atomic absorption spectroscopy at 251.6 nm.
Silver	ASTM D 3684 (digestion only)[1]	Oxygen bomb combustion with absorption in dilute nitric acid. Analyzed by flame atomic absorption spectroscopy at 328.1 nm.
Sodium	ASTM D 3682 (14)[1]	Sample is ignited, fused with lithium tetraborate, and dissolved in HCl. Analysis performed by atomic absorption spectroscopy at 589.0 nm.
Sulfate	ASTM D 2492 (6)[1]	Sulfate sulfur is extracted with HCl and determined gravimetrically by precipitation as barium sulfate.
Sulfide	ASTM D 2492 (7)[1]	Pyritic sulfur is digested with nitric acid from the residue remaining after the sulfate extraction. Iron in solution is measured by FAAS and sulfide is calculated as a stoicheometric combination with iron.
Sulfite	EPRI Method 40 (modified)[7]	A water soluble extraction is followed by filtration. Sample is added to a known amount of excess iodine solution and buffered with sodium acetate. A back-titrated with sodium thiosulfate determines sulfite levels.
Tin	ASTM D 3682[1]	Sample is ignited, fused with lithium tetraborate, and dissolved in HCl. Analysis performed by graphite furnace absorption spectroscopy at 286.3 nm.

Table 2-9. Methods for General Metals Analyses of Coal (con.)

Parameter	Reference Method	Summary
Titanium	ASTM D 3682 (16)[1]	Sample is ignited, fused with lithium tetraborate, and dissolved in HCl. Analysis performed by atomic absorption spectroscopy at 364.3 nm.
Uranium		Radiochemical technique analyzes for alpha-emitting nuclides with an alpha spectrometer using isotope dilution methods.
Vanadium	ASTM D 3682[1]	Sample is ignited, fused with lithium tetraborate, and dissolved in HCl. Analysis performed by atomic absorption spectroscopy at 318.0 nm.
Zinc	ASTM D 3682[1]	Sample is ignited, fused with lithium tetraborate, and dissolved in HCl. Analysis performed by atomic absorption spectroscopy at 213.9 nm

PROXIMATE ANALYSIS

The proximate analysis (ASTM D 3172)[1] provides basic comparative information for evaluating types of coals.

Table 2-10. Methods for Coal Proximate Analysis

Parameter	Reference Method	Summary
Moisture	ASTM D 3173[1]	Weight loss percent obtained from oven drying at 104 - 110°C.
Ash	ASTM D 3174[1]	Weight percent of residue remaining after ignition at 700 - 750°C.
Volatile Matter	ASTM D 3175[1]	Weight loss percent, corrected for moisture content, obtained from heating to 950°C.
Fixed Carbon	ASTM D 3172 (6.4)[1]	Calculation obtained from the summation of moisture content, ash, and volatile matter percentages subtracted from 100 %.
BTU / LB (as received)	ASTM D 3286[1]	Calorific value is computed from temperature data obtained from the combustion of the sample in an oxygen bomb calorimeter.
BTU / LB (dry basis)	ASTM D 3180 (3.1.3)[1]	Calculated expresses result with no moisture associated with the sample.

ULTIMATE ANALYSIS

The ultimate analysis (ASTM D 3176)[1] also provides basic information applicable to the coal industry and is often reported in conjunction with the proximate analysis. The LECO® CHN analyzer referenced in the following table is an instrument that is capable of providing quick, accurate, and efficient turnaround for carbon, hydrogen, and nitrogen determinations.

Table 2-11. Methods for Coal Ultimate Analysis

Parameter	Reference Method	Summary
Ash	ASTM D 3174[1]	Weight percent of residue remaining after ignition at 700 - 750°C.
Hydrogen	LECO-CHN analyzer	Sample is combusted at 1000°C in an oxygen atmosphere. The products of combustion are swept through an infrared cell where the detection of hydrogen as H_2O takes place.
Carbon	LECO-CHN analyzer	Sample is combusted at 1000°C in an oxygen atmosphere. The products of combustion are swept through an infrared cell where the detection of carbon as CO_2 takes place.
Nitrogen	LECO-CHN analyzer	Sample is combusted at 1000°C in an oxygen atmosphere. The products of combustion are swept through a thermal conductivity cell where the detection of nitrogen takes place.
Sulfur	ASTM D 4239 Method C[1]	Sample is combusted in oxygen at 1350 °C where sulfur is converted to SO_2. The gases pass through multiple conditioning traps and into an infrared detector where SO_2 is measured.
Oxygen	ASTM D 3176 (6.5)[1]	Calculation based on the summation of the components of the ultimate analysis subtracted from 100 %.
Chloride	ASTM D 4208[1]	Oxygen bomb combustion with absorption of the chloride in dilute sodium carbonate. Absorbing solution analyzed for chloride levels by ion selective electrode.

RADIOACTIVITY

Coal radioactivity parameters itemized in Table 2-12 were evaluated to address potential environmental concerns. Teledyne Isotopes, a reputable contract laboratory providing analytical services in the field of radioactivity, performed the studies on the coal burned at the Bailly Generating Station.

Table 2-12. Methods for Coal Radioactivity Analyses

Parameter	Reference Method	Summary
Gross Alpha		Sample is dispersed on a ringed planchet, counted in a proportional counter, and concentrations of gross alpha are calculated.
Gross Beta		Sample is dispersed on a ringed planchet, counted in a proportional counter, and concentrations of gross beta are calculated.
Radium -226		Barium carrier is added to an acidified sample where radium is initially separated on lead sulfate then barium sulfate. Ra-226 is determined by emanation method.
Lead-210		Radiochemical determination by separating daughter product Bi-210 and assaying its beta activity in a low level gas proportional counter.
Polonium-210		Sample is plated on a copper disc from an acidified solution. The disc is analyzed using an alpha spectrometer.
Thorium-230		Radiochemical technique analyzes for alpha-emitting nuclides with an alpha spectrometer using isotope dilution methods.
Radon-222		Solid sample is sealed and heated for 28 days then counted.

FLY ASH ANALYTICAL PROCEDURES

This section provides information on analytical procedures used to characterize fly ash obtained from the Bailly Generating Station. The fly ash evaluated was from coal burned during Demonstration Test #3 which is of typical sulfur content used at the utility. This section on fly ash analysis is comprised of four elements which include general metals analyses, particle size distribution, hazardous waste classification, and radioactivity.

Digestion for Metals Analyses

The digestion procedure for metals analyses of fly ash samples was carried out using ASTM D 3682 (7,8)[1]. This procedure was used to prepare samples for analysis by flame or graphite furnace atomic absorption spectroscopy. Certain exceptions did apply and modifications to the above method were carried out as necessary.

Air dried fly ash sample was ground to pass a 250 µm mesh screen and ignited first at 500°C then at 750°C. The ash was then blended with lithium tetraborate and fused at 1000°C. After fusing, the flux was dissolved in 5% HCl on a stirring hotplate, cooled, and diluted to a working volume. This solution was then analyzed for metals as specified in the methods listed below.

GENERAL METALS ANALYSIS

The analytical methodology summarized in the general metals section provides a brief description of the techniques used for major, minor, and trace elemental characterization of fly ash obtained from Northern Indiana's Bailly Generating Station.

Table 2-13. Methods for General Metals Analyses of Fly Ash

Parameter	Reference Method	Summary
Aluminum	ASTM D 3682 (10)[1]	Sample is ignited, fused with lithium tetraborate, and dissolved in HCl. Analysis performed by atomic absorption spectroscopy at 309.2 nm.
Antimony	ASTM D 3682[1]	Sample is ignited, fused with lithium tetraborate, and dissolved in HCl. Analysis performed by atomic absorption spectroscopy at 217.6 nm.
Arsenic	ASTM D 3684 (digestion only)[1]	Oxygen bomb combustion with absorption in dilute nitric acid. Analyzed by graphite furnace atomic absorption spectroscopy at 193.7 nm.
Barium	ASTM D 3682[1]	Sample is ignited, fused with lithium tetraborate, and dissolved in HCl. Analysis performed by atomic absorption spectroscopy at 553.6 nm.
Beryllium	ASTM D 3682[1]	Sample is ignited, fused with lithium tetraborate, and dissolved in HCl. Analysis performed by atomic absorption spectroscopy at 234.9 nm.
Boron	ASTM D 3684 (digestion only)[1]	Oxygen bomb combustion with absorption in dilute hydrochloric acid. Boron quantified by curcumin colorimetric procedure (EPA 212.3).
Cadmium	ASTM D 3682[1]	Sample is ignited, fused with lithium tetraborate, and dissolved in HCl. Analysis performed by atomic absorption spectroscopy at 309.2 nm.
Calcium	ASTM D 3682 (12)[1]	Sample is ignited, fused with lithium tetraborate, and dissolved in HCl. Analysis performed by atomic absorption spectroscopy at 228.8 nm.
Calcium Chloride	See Instrumental Procedure Section.	X-Ray Diffraction.

Table 2-13. Methods for General Metals Analyses of Fly Ash (con.)

Parameter	Reference Method	Summary
Calcium Fluoride	See Instrumental Procedure Section.	X-Ray Diffraction.
Calcium Hydroxide	See Instrumental Procedure Section.	X-Ray Diffraction.
Calcium Sulfate Dihydrate	See Instrumental Procedure Section.	X-Ray Diffraction.
Carbonate	ASTM D 3174 (modified)[1]	Calculation based on the weight loss obtained from 700 to 950 °C.
Chloride	ASTM D 4208[1]	Oxygen bomb combustion with absorption of the chloride in dilute sodium carbonate. Absorbing solution analyzed for chloride levels by ion selective electrode.
Chromium	ASTM D 3682[1]	Sample is ignited, fused with lithium tetraborate, and dissolved in HCl. Analysis performed by atomic absorption spectroscopy at 357.9nm.
Cobalt	ASTM D 3682[1]	Sample is ignited, fused with lithium tetraborate, and dissolved in HCl. Analysis performed by atomic absorption spectroscopy at 240.7 nm.
Copper	ASTM D 3682[1]	Sample is ignited, fused with lithium tetraborate, and dissolved in HCl. Analysis performed by atomic absorption spectroscopy at 324.8 nm.
Cyanide	Std. Method 4500-CN C,E[8]	Cyanide is evolved as hydrocyanic acid and collected in a sodium hydroxide scrubber. The solution is complexed with a pyridine reagent and measured colorimetrically.
Fluoride	ASTM D 3761[1]	Oxygen bomb combustion with absorption of the fluorine in dilute sodium hydroxide. Absorbing solution analyzed for fluoride levels by ion selective electrode.

Table 2-13. Methods for General Metals Analyses of Fly Ash (con.)

Parameter	Reference Method	Summary
Iron	ASTM D 3682 (11)[1]	Sample is ignited, fused with lithium tetraborate, and dissolved in HCl. Analysis performed by atomic absorption spectroscopy at 248.3 nm.
Lead	ASTM D 3684 (digestion only)[1]	Oxygen bomb combustion with absorption in dilute nitric acid. Analyzed by flame atomic absorption spectroscopy at 283.3nm.
Lithium	ASTM D 3684 (digestion only)[1]	Oxygen bomb combustion with absorption in dilute nitric acid. Analyzed by flame atomic absorption spectroscopy at 670.8 nm.
Magnesium	ASTM D 3682 (13)[1]	Sample is ignited, fused with lithium tetraborate, and dissolved in HCl. Analysis performed by atomic absorption spectroscopy at 285.1 nm.
Magnesium Chloride	See Instrumental Procedure Section.	X-Ray Diffraction.
Manganese	ASTM D 3682 (17)[1]	Sample is ignited, fused with lithium tetraborate, and dissolved in HCl. Analysis performed by atomic absorption spectroscopy at 279.5 nm.
Mercury	ASTM D 3684[1]	Oxygen bomb combustion with absorption in dilute nitric acid. Quantified by flameless cold vapor atomic absorption technique.
Molybdenum	ASTM D 3684 (digestion only)[1]	Oxygen bomb combustion with absorption in dilute nitric acid. Analyzed by flame atomic absorption spectroscopy at 313.3 nm.
Nickel	ASTM D 3682[1]	Sample is ignited, fused with lithium tetraborate, and dissolved in HCl. Analysis performed by atomic absorption spectroscopy at 232.0 nm.

Table 2-13. Methods for General Metals Analyses of Fly Ash (con.)

Parameter	Reference Method	Summary
Nitrate	EPA Method 352.1[4]	A water soluble digestion is followed by filtration. The extract is acidified, reacted with brucine sulfate, and placed in a hot water bath. Absorption of the resulting color complex is measured by a spectrophotometer.
Potassium	ASTM D 3682 (15)[1]	Sample is ignited, fused with lithium tetraborate, and dissolved in HCl. Analysis performed by atomic absorption spectroscopy at 766.5 nm.
Selenium	ASTM D 3684 (digestion only)[1]	Oxygen bomb combustion with absorption in dilute nitric acid. Analyzed by graphite furnace atomic absorption spectroscopy at 196.0 nm.
Silicon	ASTM D 3682 (9)[1]	Sample is ignited, fused with lithium tetraborate, and dissolved in HCl. Analysis performed by atomic absorption spectroscopy at 251.6 nm.
Silver	ASTM D 3684 (digestion only)[1]	Oxygen bomb combustion with absorption in dilute nitric acid. Analyzed by flame atomic absorption spectroscopy at 328.1 nm.
Sodium	ASTM D 3682 (14)[1]	Sample is ignited, fused with lithium tetraborate, and dissolved in HCl. Analysis performed by atomic absorption spectroscopy at 589.0 nm.
Sulfate	ASTM D 2492 (6)[1]	Sulfate sulfur is extracted with HCl and determined gravimetrically by precipitation as barium sulfate.
	ASTM C 114 (15.1)[2]	Sample is digested in HCl and the sulfate is precipitated with barium chloride. The sample is filtered, dried, and ignited. Gravimetric determination is based on recovery of barium sulfate.

Table 2-13. Methods for General Metals Analyses of Fly Ash (con.)

Parameter	Reference Method	Summary
Sulfide	ASTM D 2492 (7)[1]	Pyritic sulfur is digested with nitric acid from the residue remaining after the sulfate extraction. Iron in solution is measured by FAAS and sulfide is calculated as a stoicheometric combination with iron.
Sulfite	EPRI Method 40 (modified)[7]	A water soluble extraction is followed by filtration. Sample is added to a known amount of excess iodine solution and buffered with sodium acetate. A back-titrated with sodium thiosulfate determines sulfite levels.
Tin	ASTM D 3682[1]	Sample is ignited, fused with lithium tetraborate, and dissolved in HCl. Analysis performed by graphite furnace absorption spectroscopy at 286.3 nm.
Titanium	ASTM D 3682 (16)[1]	Sample is ignited, fused with lithium tetraborate, and dissolved in HCl. Analysis performed by atomic absorption spectroscopy at 364.3 nm.
Uranium		Radiochemical technique analyzes for alpha-emitting nuclides with an alpha spectrometer using isotope dilution methods.
Vanadium	ASTM D 3682[1]	Sample is ignited, fused with lithium tetraborate, and dissolved in HCl. Analysis performed by atomic absorption spectroscopy at 318.0 nm.
Zinc	ASTM D 3682[1]	Sample is ignited, fused with lithium tetraborate, and dissolved in HCl. Analysis performed by atomic absorption spectroscopy at 213.9 nm.

TCLP METHODS

The TCLP methods employed for fly ash characterization were designed to determine the mobility of inorganic analytes present in this solid waste. EPA SW-846 Method 1311 outlines the procedures which are required to prepare the sample for analysis. The solid waste is extracted with acetic acid or an acetic acid / sodium hydroxide solution depending on the pH of the solid phase. The 20:1 extraction takes place over a period of 18 hrs. on a rotary agitator. The slurry is filtered and the filtrate is defined as the TCLP extract. This extract is used as the sample in the analytical procedures listed below.

Table 2-14. Fly Ash TCLP Analytical Methods

Parameter	Reference Method	Summary
Silver	EPA SW-846 Method 6010[3]	Inductively coupled plasma atomic emission spectroscopy measured at a wavelength of 328.068 nm.
Arsenic	EPA SW-846 Method 6010[3]	Inductively coupled plasma atomic emission spectroscopy measured at a wavelength of 193.696 nm.
Barium	EPA SW-846 Method 6010[3]	Inductively coupled plasma atomic emission spectroscopy measured at a wavelength of 455.403 nm.
Cadmium	EPA SW-846 Method 6010[3]	Inductively coupled plasma atomic emission spectroscopy measured at a wavelength of 226.502 nm.
Corrosivity-pH	EPA SW-846 Method 9045[3]	An electrochemical procedure which measures the pH of the supernatant portion of a 1:1 dispersion of a sample in high purity water.
Chromium	EPA SW-846 Method 6010[3]	Inductively coupled plasma atomic emission spectroscopy measured at a wavelength of 267.716nm.

Table 2-14. Fly Ash TCLP Analytical Methods (con.)

Parameter	Reference Method	Summary
Mercury	EPA SW-846 Method 7470[3]	Mercury is reduced to the elemental form and is aerated from solution. The vapor passes through a closed system and into the light path of an AA spectrophotometer. Absorbance is measured at 253.7 nm. as a function of concentration.
Ignitability	40 CFR 261.21[5]	Vigorous and persistent burning when sample is ignited.
Lead	EPA SW-846 Method 6010[3]	Inductively coupled plasma atomic emission spectroscopy measured at a wavelength of 220.353 nm.
Reactive Cyanide	EPA SW-846 Method 9010[3]	Cyanide is evolved as hydrocyanic acid and collected in a sodium hydroxide scrubber. The solution is complexed with a pyridine reagent and measured colorimetrically.
Reactive Sulfide	EPA SW-846 Method 9030[3]	Sample is pretreated with zinc acetate. Hydrogen sulfide is evolved through acidification in a closed system. Analysis is performed using an iodine sodium-thiosulfate back titration.
Selenium	EPA SW-846 Method 6010[3]	Inductively coupled plasma atomic emission spectroscopy measured at a wavelength of 196.026 nm.
Total Solids	Std. Method 209 F[9]	Solid samples are dried to a constant weight at 103-105 ^{o}C.

INDIANA NEUTRAL LEACHATE TEST

The purpose of The Indiana Neutral Leachate Test (INLT) test is to provide further characterization of the waste stream for waste classification purposes. The Indiana Department of Environmental Management has identified maximum permissible levels for certain water soluble constituents which may be present in the waste stream. The INLT sample preparation procedure is identical to that of the TCLP Method 1311 except for the type of fluid used in the extraction process. Deionized water is substituted for the acetic acid solutions that are used in the TCLP extraction. All other procedures found in Method 1311 are carried out. This extract is then subjected to the following analytical procedures.

Table 2-15. Indiana Neutral Leachate Methods for Fly Ash

Parameter	Reference Method	Summary
Barium	EPA SW-846 Method 7080[3]	Atomic absorption spectroscopy at 553.6 nm. with a nitrous oxide/ acetylene flame and KCl as an ionization suppressant.
Boron	EPA Method 200.7[4]	Inductively coupled plasma atomic emission spectroscopy at 249.773 nm.
Chloride	Std. Method 407 B[9]	Mercuric nitrate titration. Chloride is titrated with mercuric nitrate to form a soluble, slightly dissociated mercuric chloride. Endpoint is determined by a purple complex resulting from the presence of diphenylcarbazone with excess mercuric ions.
Copper	EPA SW-846 Method 7210[3]	Atomic absorption spectroscopy at 324.7 nm. with a lean oxidizing flame.
Cyanide (Amenable)	EPA Method 335.1[4]	Sample is chlorinated at pH > 11 to decompose cyanide. EPA Method 335.2 (total cyanide) is then used for the determination.

Table 2-15. Indiana Neutral Leachate Methods for Fly Ash (con.)

Parameter	Reference Method	Summary
Cyanide (Total)	EPA Method 335.2[4]	Cyanide is evolved as hydrocyanic acid and collected in a sodium hydroxide scrubber. The solution is either titrated with silver nitrate or complexed with a pyridine reagent and measured colorimetrically.
Fluoride	EPA method 340.1[4]	Sample is distilled and the fluoride is reacted with a SPADNS reagent. Loss of color is measured colorimetrically and is a function of fluoride level.
Iron	EPA SW-846 Method 7380[3]	Atomic absorption spectroscopy at 248.3 nm. with a lean oxidizing flame and background correction.
Manganese	EPA SW-846 Method 7460[3]	Atomic absorption spectroscopy at 279.5 nm. with a lean oxidizing flame and background correction.
Nickel	EPA SW-846 Method 7520[3]	Atomic absorption spectroscopy at 232.0 nm. with a lean oxidizing flame and background correction.
pH	EPA Method 150.1[4]	Hydrogen ion activity is measured potentiometrically using a glass and reference electrode.
Phenolics (Total)	EPA Method 420.1[4]	Formation of a red-brown anti-pyrine dye is measured colorimetrically and the color produced is a function of phenolic material.
Sodium	EPA SW-846 Method 7770[3]	Atomic absorption spectroscopy at 589.6 nm. with a lean oxidizing flame. The use of an ionization suppressant is recommended.
Sulfate	EPA Method 375.4[4]	Turbidimetric method reacts sample with barium chloride to precipitate barium sulfate. Absorbance is measured with a spectrophotometer and plotted on a calibration curve of known sulfate standards.

Table 2-15. Indiana Neutral Leachate Methods for Fly Ash (con.)

Parameter	Reference Method	Summary
Sulfides (Total)	Std. Method 427 C[9]	Sulfide, ferric chloride, and dimethyl-p-phenylenediamine are reacted to produce methyene blue. Ammonium phosphate is added to remove color due to ferric chloride. Absorbance is measured with a spectrophotometer.
TDS	EPA Method 160.1[4]	Sample is filtered through a glass fiber filter. The filtrate is evaporated and dried to a constant weight at 180 ^{o}C.
Zinc	EPA SW-846 Method 7950[3]	Atomic absorption spectroscopy at 213.9 nm. with a lean oxidizing flame and background correction.

RADIOACTIVITY

Fly ash radioactivity parameters itemized in Table 2-16 were evaluated to address potential environmental concerns. Teledyne Isotopes, a reputable contract laboratory providing analytical services in the field of radioactivity, performed the studies on the fly ash produced at the NIPSCO Bailly Generating Station.

Table 2-16. Radioactivity Methods for Fly Ash

Parameter	Reference Method	Summary
Gross Alpha		Sample is dispersed on a ringed planchet, counted in a proportional counter, and concentrations of gross alpha are calculated.
Gross Beta		Sample is dispersed on a ringed planchet, counted in a proportional counter, and concentrations of gross beta are calculated.
Radium -226		Barium carrier is added to an acidified sample where radium is initially separated on lead sulfate then barium sulfate. Ra-226 is determined by emanation method.
Lead-210		Radiochemical determination by separating daughter product Bi-210 and assaying its beta activity in a low level gas proportional counter.
Polonium-210		Sample is plated on a copper disc from an acidified solution. The disc is analyzed using an alpha spectrometer.
Thorium-230		Radiochemical technique analyzes for alpha-emitting nuclides with an alpha spectrometer using isotope dilution methods.
Radon-222		Solid sample is sealed and heated for 28 days then counted.

PROCESS WATER ANALYTICAL PROCEDURES

This section provides information on analytical procedures used to characterize in-coming process water to the Bailly facility. This water was used as make-up water for the absorber, wash water for the dewatering operation, and spray down of the mist eliminators.

Digestion for Metals Analyses

The digestion procedures for metals analyses of process water samples were carried out according to the EPA procedures[4] identified with each specific analytical method. Reference to part 4.1 of the atomic absorption methods was mentioned for those analyses conducted by AA techniques. These procedures were used to prepare samples for analysis by flame/graphite furnace atomic absorption spectroscopy and inductively coupled plasma atomic emission spectroscopy.

GENERAL METALS ANALYSIS

The analytical methodology summarized in the general metals section provides a brief description of the techniques for trace elemental characterization of process water used at the Bailly FGD facility

Table 2-17. Methods for General Metals Analyses of Process Water

Parameter	Reference Method	Summary
Aluminum	EPA Method 202.1[4]	Atomic absorption spectroscopy at 309.3 nm. using a nitrous oxide-acetylene flame. KCl is added to prevent ionization.
Antimony	EPA Method 204.2[4]	Graphite furnace analysis at 217.6 nm using background correction. Ammonium nitrate used for controlling chloride interference.
Arsenic	EPA Method 206.2[4]	Graphite furnace analysis at 193.7 nm with background correction. Nickel nitrate is used as a matrix modifier.
Barium	EPA Method 208.1[4]	Flame atomic absorption analysis at 553.6 nm with a nitrous oxide-acetylene fuel rich flame. KCl is added as an ionization suppressant.
Beryllium	EPA Method 200.7[4]	Inductively coupled plasma atomic emission spectroscopy at 313.042 nm.
Boron	EPA Method 200.7[4]	Inductively coupled plasma atomic emission spectroscopy at 249.773 nm.
Cadmium	EPA Method 213.1[4]	Atomic absorption spectroscopy at 228.8 nm. with an oxidizing flame.
Calcium	EPA Method 215.1[4]	Atomic absorption spectroscopy at 422.7 nm using a nitrous oxide-acetylene flame. Lanthanum nitrate is used to control chemical interferences.
Carbonate	EPA Method 310.1[4] Std. Method 4500-CO2 D[8]	Unaltered sample from the source stream is titrated potentiometrically to pH 4.5. Carbonate alkalinity can be calculated from sample pH and total alkalinity if the sample meets criteria specified in this method.

Table 2-17. Methods for General Metals Analyses of Process Water (con.)

Parameter	Reference Method	Summary
Chloride	Std. Method 407 B[9]	Mercuric nitrate titration. Chloride is titrated with mercuric nitrate to form a soluble, slightly dissociated mercuric chloride. Endpoint is determined by a purple complex resulting from the presence of diphenylcarbazone with excess mercuric ions.
Chromium	EPA Method 218.1[4]	Flame atomic absorption analysis at 347.9 nm with a nitrous oxide-acetylene fuel rich flame.
Cobalt	EPA Method 200.7[4]	Inductively coupled plasma atomic emission spectroscopy at 228.616 nm.
Copper	EPA Method 220.1[4]	Atomic absorption spectroscopy at 324.7 nm. with a lean oxidizing flame.
Cyanide	EPA Method 335.2[4]	Cyanide is evolved as hydrocyanic acid and collected in a sodium hydroxide scrubber. The solution is either titrated with silver nitrate or complexed with a pyridine reagent and measured colorimetrically.
Fluoride	EPA method 340.1[4]	Sample is distilled and the fluoride is reacted with a SPADNS reagent. Loss of color is measured colorimetrically and is a function of fluoride level.
Flow		An orifice plate creates a pressure drop across the plate. The pressure drop is correlated with flow rate.
Iron	EPA Method 236.1[4]	Atomic absorption spectroscopy at 248.3 nm. with a lean oxidizing flame and background correction.
Lead	EPA Method 239.2[4]	Graphite furnace atomic absorption spectroscopy at 283.3 nm. Lanthanum added to suppress sulfate interference. Background correction recommended.

Table 2-17. Methods for General Metals Analyses of Process Water (con.)

Parameter	Reference Method	Summary
Lithium	EPA Method 200.7[4]	Inductively coupled plasma atomic emission spectroscopy at 670.78 nm.
Magnesium	EPA Method 242.1[4]	Atomic absorption spectroscopy at 285.2 nm. using an oxidizing flame and the addition of lanthanum chloride.
Manganese	EPA Method 243.1[4]	Atomic absorption spectroscopy at 279.5 nm. with a lean oxidizing flame and background correction.
Mercury	EPA Method 245.1[4]	Flameless atomic absorption at 253.7 nm. Absorbance is measured as a function of mercury concentration as the vapor passes through the light path of a spectrometer.
Molybdenum	EPA SW-846 Method 6010[3]	Inductively coupled plasma atomic emission spectroscopy at 202.03 nm.
Nickel	EPA Method 249.1[4]	Flame AA analysis with an oxidizing air-acetylene flame at 232.0 nm. and background correction.
Nitrate	EPA Method 353.3[4]	Samples containing nitrate and nitrite are reduced to nitrite by passing the sample through a column containing copper-cadmium. The nitrite forms a highly colored dye after diazotizing with sulfanilamide and reacting with N-(1-napthyl)-ethylenediamine dihydrochloride. Nitrate is determined by difference after carrying out the above procedure without the copper-cadmium reduction process.
Oil and Grease	EPA Method 413.1[4]	An acidified sample is extracted with fluorocarbon-113. The residue is weighed after the solvent is evaporated from the extract.
pH	EPA Method 150.1[4]	Hydrogen ion activity is measured potentiometrically using a glass and reference electrode.

Table 2-17. Methods for General Metals Analyses of Process Water (con.)

Parameter	Reference Method	Summary
Potassium	EPA Method 258.1[4]	Atomic absorption spectroscopy at 766.5 nm. using a slightly oxidizing flame. The use of an ionization suppressant is suggested.
Selenium	EPA Method 270.2[4]	Graphite furnace atomic absorption spectroscopy at 196.0 nm. The use of nickel nitrate as a matrix modifier and background correction should be incorporated.
Silicon	EPA Method 200.7[4]	Inductively coupled plasma atomic emission spectroscopy at 228.158 nm.
Silver	EPA Method 272.1[4]	Flame AA analysis at 328.1 nm with an air-acetylene flame. Sample must be digested in nitric rather than HCl to prevent precipitation of silver chloride.
Sodium	EPA Method 273.1[4]	Atomic absorption spectroscopy at 589.6 nm. with a lean oxidizing flame. The use of an ionization suppressant is recommended.
Sulfate	EPA Method 375.4[4]	Turbidimetric method reacts sample with barium chloride to precipitate barium sulfate. Absorbance is measured with a spectrophotometer and plotted on a calibration curve of known sulfate standards.
Sulfite	EPRI Method 40[7]	Sample is added to a known amount of excess iodine solution, acidified, and in the presence of starch, back-titrated with sodium thiosulfate.
Sulfide	Std. Method 427 C[9]	Sulfide, ferric chloride, and dimethyl-p-phenylenediamine are reacted to produce methyene blue. Ammonium phosphate is added to remove color due to ferric chloride. Absorbance is measured with a spectrophotometer.

Table 2-17. Methods for General Metals Analyses of Process Water (con.)

Parameter	Reference Method	Summary
Tin	EPA Method 200.7[4]	Inductively coupled plasma atomic emission spectroscopy at 189.99 nm.
TSS	EPA Method 160.2[4]	Sample is filtered through a glass fiber filter. The residue and filter are dried to a constant weight at 103-105 °C.
TDS	EPA Method 160.1[4]	Sample is filtered through a glass fiber filter. The filtrate is evaporated and dried to a constant weight at 180 °C.
Titanium	EPA Method 200.7[4]	Inductively coupled plasma atomic emission spectroscopy at 334.94 nm.
Uranium	EPA Method 200.7[4]	Inductively coupled plasma atomic emission spectroscopy at 385.96 nm.
Vanadium	EPA Method 200.7[4]	Inductively coupled plasma atomic emission spectroscopy at 292.402 nm.
Zinc	EPA Method 289.1[4]	Atomic absorption spectroscopy at 213.9 nm. with a lean oxidizing flame and background correction.

WASTE WATER INFLUENT / EFFLUENT ANALYTICAL PROCEDURES

This section provides information on analytical procedures used to characterize wastewater influent and effluent obtained from the Bailly FGD wastewater treatment plant. Wastewater influent was collected before entering into the neutralization tank of the treatment facility. Effluent was composite sampled prior to entering into the main outfall of the utility.

Digestion for Metals Analyses

The digestion procedures for metals analyses of wastewater samples were carried out according to the EPA procedures[4] identified with each specific analytical method. Reference to part 4.1 of the atomic absorption methods is mentioned for those analyses conducted by AA techniques. These procedures were used to prepare samples for analysis by flame/graphite furnace atomic absorption spectroscopy and inductively coupled plasma atomic emission spectroscopy.

GENERAL METALS ANALYSIS

The analytical methodology summarized in the general metals section provides a brief description of the techniques for trace elemental characterization of wastewater samples obtained from the Bailly FGD wastewater treatment facility.

Table 2-18. Methods for General Metals Analyses of Wastewater

Parameter	Reference Method	Summary
Aluminum	EPA Method 202.1[4]	Atomic absorption spectroscopy at 309.3 nm. using a nitrous oxide-acetylene flame. KCl is added to prevent ionization.
Antimony	EPA Method 204.2[4]	Graphite furnace analysis at 217.6 nm using background correction. Ammonium nitrate used for controlling chloride interference.
Arsenic	EPA Method 206.2[4]	Graphite furnace analysis at 193.7 nm with background correction. Nickel nitrate is used as a matrix modifier.
Barium	EPA Method 208.1[4]	Flame atomic absorption analysis at 553.6 nm with a nitrous oxide-acetylene fuel rich flame. KCl is added as an ionization suppressant.
Beryllium	EPA Method 200.7[4]	Inductively coupled plasma atomic emission spectroscopy at 313.042 nm.
Boron	EPA Method 200.7[4]	Inductively coupled plasma atomic emission spectroscopy at 249.773 nm.
Cadmium	EPA Method 213.1[4]	Atomic absorption spectroscopy at 228.8 nm. with an oxidizing flame.
Calcium	EPA Method 215.1[4]	Atomic absorption spectroscopy at 422.7 nm using a nitrous oxide-acetylene flame. Lanthanum nitrate is used to control chemical interferences.
Chloride	Std. Method 407 B[9]	Mercuric nitrate titration. Chloride is titrated with mercuric nitrate to form a soluble, slightly dissociated mercuric chloride. Endpoint is determined by a purple complex resulting from the presence of diphenylcarbazone with excess mercuric ions.

Table 2-18. Methods for General Metals Analyses of Wastewater (con.)

Parameter	Reference Method	Summary
Chromium	EPA Method 218.1[4]	Flame atomic absorption analysis at 347.9 nm with a nitrous oxide-acetylene fuel rich flame.
Cobalt	EPA Method 200.7[4]	Inductively coupled plasma atomic emission spectroscopy at 228.616 nm.
Copper	EPA Method 220.1[4]	Atomic absorption spectroscopy at 324.7 nm. with a lean oxidizing flame.
Cyanide	EPA Method 335.2[4]	Cyanide is evolved as hydrocyanic acid and collected in a sodium hydroxide scrubber. The solution is either titrated with silver nitrate or complexed with a pyridine reagent and measured colorimetrically.
Fluoride	EPA Method 340.1[4]	Sample is distilled and the fluoride is reacted with a SPADNS reagent. Loss of color is measured colorimetrically and is a function of fluoride level.
Flow		Magnetic flow meter.
Iron	EPA Method 236.1[4]	Atomic absorption spectroscopy at 248.3 nm. with a lean oxidizing flame and background correction.
Lead	EPA Method 239.2[4]	Graphite furnace atomic absorption spectroscopy at 283.3 nm. Lanthanum added to suppress sulfate interference. Background correction recommended.
Lithium	EPA Method 200.7[4]	Inductively coupled plasma atomic emission spectroscopy at 670.78 nm..
Magnesium	EPA Method 242.1[4]	Atomic absorption spectroscopy at 285.2 nm. using an oxidizing flame and the addition of lanthanum chloride.
Manganese	EPA Method 243.1[4]	Atomic absorption spectroscopy at 279.5 nm. with a lean oxidizing flame and background correction.

Table 2-18. Methods for General Metals Analyses of Wastewater (con.)

Parameter	Reference Method	Summary
Mercury	EPA Method 245.1[4]	Flameless atomic absorption at 253.7 nm. Absorbance is measured as a function of mercury concentration as the vapor passes through the light path of a spectrometer.
Molybdenum	EPA SW-846 Method 6010[3]	Inductively coupled plasma atomic emission spectroscopy at 202.03 nm.
Nickel	EPA Method 249.1[4]	Flame AA analysis with an oxidizing air-acetylene flame at 232.0 nm. and background correction.
Oil and Grease	EPA Method 413.1[4]	An acidified sample is extracted with fluorocarbon-113. Residue is weighed after the solvent is evaporated from the extract.
pH	EPA Method 150.1[4]	Hydrogen ion activity is measured potentiometrically using a glass and reference electrode.
Potassium	EPA Method 258.1[4]	Atomic absorption spectroscopy at 766.5 nm. using a slightly oxidizing flame. The use of an ionization suppressant is suggested.
Selenium	EPA Method 270.2[4]	Graphite furnace atomic absorption spectroscopy at 196.0 nm. The use of nickel nitrate as a matrix modifier and background correction should be incorporated.
Silver	EPA Method 272.1[4]	Flame AA analysis at 328.1 nm with an air-acetylene flame. Sample must be digested in nitric rather than HCl to prevent precipitation of silver chloride.
Sodium	EPA Method 273.1[4]	Atomic absorption spectroscopy.

Table 2-18. Methods for General Metals Analyses of Wastewater (con.)

Parameter	Reference Method	Summary
Sulfate	EPA Method 375.4[4]	Turbidimetric method reacts sample with barium chloride to precipitate barium sulfate. Absorbance is measured with a spectrophotometer and plotted on a calibration curve of known sulfate standards.
Sulfide	Std. Method 427 C[9]	Sulfide, ferric chloride, and dimethyl-p-phenylenediamine are reacted to produce methyene blue. Ammonium phosphate is added to remove color due to ferric chloride. Absorbance is measured with a spectrophotometer.
Tin	EPA Method 200.7[4]	Inductively coupled plasma atomic emission spectroscopy at 189.99 nm.
TSS	EPA Method 160.2[4]	Sample is filtered through a glass fiber filter. The residue and filter are dried to a constant weight at 103-105 ^{o}C.
TDS	EPA Method 160.1[4]	Sample is filtered through a glass fiber filter. The filtrate is evaporated and dried to a constant weight at 180 ^{o}C.
Titanium	EPA Method 200.7[4]	Inductively coupled plasma atomic emission spectroscopy at 334.94 nm.
Uranium	EPA Method 200.7[4]	Inductively coupled plasma atomic emission spectroscopy at 385.96 nm.
Vanadium	EPA Method 200.7[4]	Inductively coupled plasma atomic emission spectroscopy at 292.402 nm.
Zinc	EPA Method 289.1[4]	Atomic absorption spectroscopy at 213.9 nm. with a lean oxidizing flame and background correction.

SECTION 6.2.3

LABORATORY OPERATIONS

The Bailly FGD laboratory is assigned with the prime responsibility of acquiring and reporting physical and chemical data which is critical to the operation of the FGD unit. Aside of the daily reporting of routine process data, personnel are also charged with other responsibilities associated with laboratory and plant operations. A sample of these tasks include:

- data entry and analysis
- statistical process and quality control
- laboratory quality assurance and safety
- process analyzer maintenance and calibration
- perform non-routine analyses
- laboratory training of operations personnel
- laboratory maintenance
- report writing

LABORATORY LAYOUT, EQUIPMENT, AND SUPPLIES

The Bailly FGD laboratory is a 320 sq. ft. facility providing space to accommodate two lab personnel. The air conditioned lab is located on the first floor of the administration building adjacent to the control room. A remote supply area allows for the storage of consumable items such as polyethylene bottles as well as infrequently used equipment which would otherwise occupy valuable laboratory space.

A floor plan of the laboratory is provided in Figure 3-1. The size of the lab and the scope of its operations were designed to provide routine daily monitoring of FGD system performance. Increased sample loads and non-routine analyses occurring as a result of test plan monitoring require the support of additional technical personnel and contract lab resources.

Figure 3-1. FGD Laboratory Floor Plan

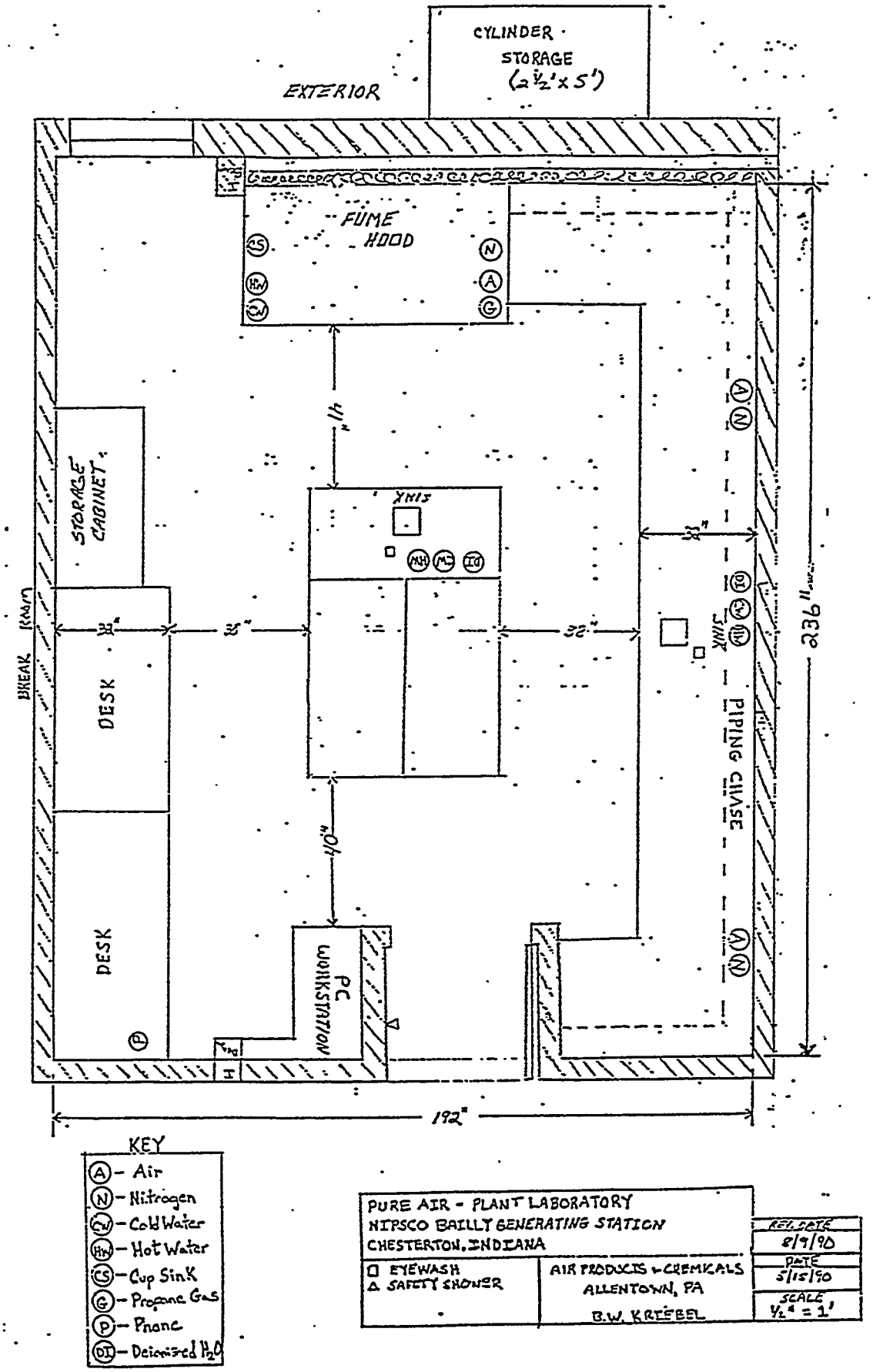

KEY

- (A) – Air
- (N) – Nitrogen
- (CW) – Cold Water
- (HW) – Hot Water
- (CS) – Cup Sink
- (G) – Propane Gas
- (P) – Phone
- (DI) – Deionized H_2O

PURE AIR - PLANT LABORATORY NIPSCO BAILLY GENERATING STATION CHESTERTON, INDIANA	REV. DATE 8/9/90
□ EYEWASH △ SAFETY SHOWER	DATE 5/15/90
AIR PRODUCTS & CHEMICALS ALLENTOWN, PA B.W. KRIEBEL	SCALE ½" = 1'

The lab is configured with a variety of floor mounted base cabinets which support Kemresin® bench tops. Wall mounted cabinets with glass doors are provided for additional storage space. In addition to the main laboratory furniture, the facility is also equipped with the following items:

- fume hood - auxiliary air type with corrosion resistant components
- acid and flammable storage cabinets
- central deionized water system
- 100 amp electrical service (ground faulted)
- lab bench utilities (water, nitrogen, propane gas1, compressed air, vacuum)
- two sinks with eyewash stations
- safety shower
- refrigerator
- sample storage cabinet
- computer workstation
- two technician desks

A list of analytical equipment required for operation of the FGD lab can be found in Table 3-1. The equipment listed in this table is typical of that found in a wet inorganic chemistry lab and will support the process stream analytical methodology summarized in Table 2-6. The lab is also equipped with a microprocessor controlled infrared moisture analyzer capable of providing rapid two-step loss on drying results. Applications for free and combined water determinations on gypsum by-product have been developed using this instrument.

Table 3-2 contains a list of reagent grade chemicals which are required to carry out the analytical test procedures cited in Table 2-6. The purity of the chemical purchased is dictated by the type of analysis in which it is to be used. A reagent used for sample preparation for trace elemental analysis should be of significantly higher purity then one required for general bulk characterization. Products labeled *"Meets ACS Specifications"* or the like are recommended.

Table 3-1. Analytical Instrumentation and Accessories

Analytical Balance, Mettler AT200	Muffle Furnace, Thermolyne F48025-70
Blaine Air Permeability Apparatus	Oven, Thermolyne 2.9 ft3
DI Cartdige Kit, NANOpure, D4801	Pan Balance, Mettler PM6100
Chloride ISE, ORION	pH Meter, ORION Portable w/ start kit
Conductivity/TDS Meter Kit, ORION 124	pH/ISE Meter, ORION EA940
Dessicator	Sampler, Riffle Type ASTM D271
Electrode pH, Std. Sure-Flow Glass	Sieve Shaker w/Timer,CSC
Electrode, Reference Double Junction	Spectrophotometer, Spectronic 21
Electrode, Reference Single Junction	Stirrer, Caframo RZR1
Electrose pH, Std. Sure-Flow Epoxy	Stirrer, Corning 35 in2
Fluoride ISE, ORION 9409BN	Stirrer, Lighted, Thermolyne
Hot Plate, Corning 100 in2	Vacuum Pump, Gast 4 cfm
Hot Plate/Stirrer, Corning 35 in2	Water Bath, VWR 1235PC, Medium
Moisture Analyzer, LOD, ORION Model II	DI Water System, NANOpure, D4741

Table 3-2. Laboratory Chemical Reagents

1,10-Phenathroline Monohydrate, 5 g.
Acacia, 100 g.
Acetic Acid, Glacial 2.5 L
Acetone, 4 L
Alcohol, Anhydrous Denatured
Aluminon, 25 g.
Aluminum Powder, 50 g.
Ammonium Acetate, 500 g.
Ammonium Chloride, 500 g.
Ammonium Fluoride, 125 g.
Ammonium Hydroxide, 2.5 L
Ammonium Oxalate, 125 g.
Ammonium Sulfate, 50 g.
Arabic Gum
Barium Chloride, Dihydrate, 500 g.
Bromine Water, 500 ml
Bromocresol Green, 5 g.
Bromophenol Blue
Buffer Solution, pH 10, 500 ml.
Buffer Solution, pH 4, 500 ml.
Buffer Solution, pH 7, 500 ml.
Calcium Carbonate, 100 g.
Calmagite, 5 g.
Conductivity Std., 1000 umhos, NIST
Diphenylcarbazone
Disodium dihydrogen Ethylenediamine tetraacetic acid (EDTA), 500 g.
Drierite, Indicating 8 mesh
Erichrome Black T, 25 g.
Ferrous Ammonium Sulfate,Hexahydrate
Hexamethylenetetramine
Hydrazine Sulfate
Hydrochloric Acid, Instra, 2.5 L
Hydrofluoric Acid, 500 ml
Hydrogen Peroxide, 500 ml.
Hydroxy Napthol Blue, 25 g.
Hydroxylamine Hydrochloride, 125 g.
Iodine, Resublimed 2.5 kg.
Iron Powder, 50 g.
L-Ascorbic Acid, 100 g.
Lanthanum Nitrate
Magnesium Oxide, 25 g.
Magnesium Sulfate, 500 g.
Manganese Sulfate, 500 g.
Mecuric Chloride, 125 g.
Mecuric Nitrate
Mercaptoacetic Acid, 100 g.
Methyl Orange, Powder, 30 g.
Methyl Red, Sodium Salt, 10 g.
N-Acetylmeuraminic Acid
NIST 40c - Sodium Oxalate, 60 g.
Nitric Acid, Instra, 2.5 L
p-Nitrophenol, 100 g.
Phenolthalein, Powder, 125 g.
Phosphoric Acid, 500 ml.
Potassium Chloride, 50 g.
Potassium Chromate, 125 g.
Potassium Hydroxide, 500 g.
Potassium Iodate, 125 g.
Potassium Iodide, 2.5 kg.
Potassium Nitrate
Potassium Permanganate, 500 g.
Potassium Pyrosulfate
Potassium Sulfate, 500 g.
Silicon Powder, 25 g.
Silver Nitrate, 125 g.
Sodium Acetate, 500 g.
Sodium Bismuthate, 25 g.
Sodium Carbonate, 500 g.
Sodium Chloride, 100 g.
Sodium Citrate
Sodium Fluoride, 250 g.
Sodium Hydroxide, Pellet, 500 g.
Sodium Nitrate, 500 g.
Sodium Sulfite, 500 g.
Sodium Tartrate
Sodium Thiosulfate, 0.1N, 4L
Stannous Chloride.2H2O, 500 g.
Starch, 125 g.
Sulfuric Acid, Instra, 2.5 L
TISAB II, 1 gal.
Triethanolamine, 500 ml.

General laboratory glassware and supplies are itemized in Tables 3-3 and 3-4, respectively. This inventory of consumables and analytical accessories is standard protocol for a chemistry laboratory. Glassware purchased for use in the Bailly lab is of the high quality type and rated "Class A", where applicable.

Appendix B contains a list of vendors who were selected to supply laboratory furniture, analytical instrumentation, chemical reagents, and other laboratory products to equip the Bailly FGD laboratory for operation.

LAB PERSONNEL

An analytical chemist with a technical discipline in atomic spectroscopy and wet inorganic chemistry was assigned to the project to provide technical support for the start-up and demonstration testing of the Bailly FGD unit. This individual has been charged with overseeing all aspects of laboratory planning and operations which included:

- coordinating all functions associated with the design and construction of the FGD laboratory
- specifying and procuring analytical instrumentation and laboratory supplies
- determining manpower requirements and training laboratory staff
- selecting and validating analytical test methods
- implementing a contract lab evaluation program
- directing analytical testing activities and providing technical support

A technician routinely staffs the FGD laboratory with direction from the plant manager. This individual is responsible for the day to day operations of the plant laboratory. The technician has two years of college training in chemistry and has six years of previous experience in plant labs. The technician's hands-on laboratory experience include wet inorganic chemistry techniques and atomic absorption spectroscopy. The individual is also acquainted with formal analytical methodology, general laboratory practices, and QA/QC procedures.

Table 3-3. General Laboratory Glassware

Adapter, Optifix 38 mm Teflon
Beaker, 150 ml
Beaker, 250 ml
Beaker, 400 ml
Beaker, 50 ml
Beaker, 600 ml
Beaker, Heatable 100 ml
Beaker, PMP Nalgene 1000 ml
Beaker, PMP Nalgene 2000 ml
Beaker, Teflon 150 ml
Bottle, Polypropylene, 4 L
Bottles, Dropping LDPE, 60 ml.
Buret, Automatic 25 ml
Buret, Automatic 50 ml
Buret, KIMAX, 25 ml
Buret, KIMAX, 50 ml
Buret, Micro Auto, 10 ml
Condensor, 220 ml spherical
w/ side stopcock
Dispenser, Optifix 10 ml
Dispenser, Precise-Volume, 1 ml.
Dispenser, Precise-Volume, 2 ml.
Dispenser, Precise-Volume, 5 ml.
Dispenser, Variable-Volume, 25 ml.
Dropping Bottle, Amber 2 oz.
Erlenmeyer Flask w/ Stopper, 25 ml
Erlenmeyer Flask, 500 ml
Erlenmeyer Flasks, 125 ml
Erlenmeyer Flasks, 250 ml
Erlenmeyer Flasks, 500 ml
Filling/Venting Closure, 83 mm.
Filter Funnel, Buchner 126 mm.
Filter Funnel, Buchner 253 mm.
Filter Funnel, Buchner 83 mm.
Flask,170 ml round bottom
w/ side distillation tube

Funnel, 60ml dropping
Filter Holder, Nalgene 500/500 ml
Filter Flask, Nalgene PP 1000 ml
Filter Flask, Nalgene PP 500 ml
Filtration Flasks, 250 ml
Filtration Flasks, 500 ml
Funnel, Polyprop 114 ml.
Funnel, Polyprop 254 ml.
Funnel, Polyprop 41 ml.
Funnel, Powder 104 mm.
Funnel, Powder 65 mm.
Gas Wash Bottle, 250 ml.
Glass Tube, 3 in.
Grad Cylinder, PMP Nalgene 10 ml
Grad Cylinder, PMP Nalgene 100 ml
Grad Cylinder, PMP Nalgene 25 ml
Grad Cylinder, PMP Nalgene 250 ml
Grad Cylinder, PMP Nalgene 50 ml
Grad Cylinder, PMP Nalgene 500 ml
Graduated Cylinder, 10 ml
Graduated Cylinder, 100 ml
Graduated Cylinder, 25 ml
Graduated Cylinder, 250 ml
Graduated Cylinder, 50 ml
Hydrometer, 1.000 - 1.050
Hydrometer, 1.050 - 1.100
Hydrometer, 1.100 - 1.150
Hydrometer, 1.150 - 1.200
Hydrometer, 1.200 - 1.250
Hydrometer, 1.250 - 1.300
Male Adapter, 1/4"
Measuring Burret, 25 ml
Pipet Filler, Black
Pipet, Eppendorf 10-100 uL
Pipet, Eppendorf 200-1000 uL
Pipet, Nalgene 10 ml

Pipet, Nalgene 5 ml
Poly Bottle, 1000 ml HDPE
Poly Bottle, 1000 ml LDPE
Poly Bottle, 125 ml
Poly Bottle, 250 ml HDPE
Poly Bottle, 500 ml LDPE
Poly Bottle, 60 ml
Poly Bottle, Amber 1000 ml HDPE
Poly Bottle, Amber 250 ml HDPE
Poly Wide Mouth Bottle, 1 gal.
Safety Bulb, Pipet
Self-Zeroing Buret Kit
Vol. Flask, PMP Nalgene 100 ml
Vol. Flask, PMP Nalgene 50 ml
Volumetric Flasks, 100 ml
Volumetric Flasks, 1000 ml
Volumetric Flasks, 25 ml
Volumetric Flasks, 250 ml
Volumetric Flasks, 50 ml
Volumetric Flasks, 500 ml
Volumetric Pipet, 1 ml
Volumetric Pipet, 10 ml
Volumetric Pipet, 2 ml
Volumetric Pipet, 20 ml
Volumetric Pipet, 25 ml
Volumetric Pipet, 5 ml
Volumetric Pipet, 50 ml
Wash Bottle, 500 ml.
Watch Glass, 75 mm.
Watch Glass, 90 mm.
Weigh Bottle, GlassStopper, 50x25
Weigh Bottle, Glass Stopper, 80x40
Dial Thermometer, 0 to 150 oC
Thermometer, -10 to 260oC, Yellow
Thermometer, -20 to 150oC, Yellow
Thermometer, Water Bath

Table 3-4. General Lab Supplies

Brush, button
Burner, Meker Type
Calibration Weights, Balance
Clamp Assembly
Clamp Holder, 90 Degree
Clamp, Double Buret
Clamp, Pinchcock, Large
Clamp, Screw Compressor, Small
Clamp, Thermometer Extension
Clamp, Three-Prong Large
Clamp, Three-Prong Medium
Clamp, Three-Prong Small
Clamps, Hose, Various size
Connector, Tubing Straight
Connector, Tubing Y-shaped
Covers, Platinum 30 ml
Crucible Cover, Porcelain Size G
Crucible, Platinum 30 ml
Crucibles, Porcelain 30ml.
Crucibles, Wide Porc, 150 ml.
Dish, Platinum 100 ml.
Dispenser, Parafilm
Filter Paper, Ashless #40 24.0 cm
Filter Paper, Ashless #40 7.0 cm
Filter Paper, Ashless #40 11.0 cm.
Filter Paper, Ashless #40 12.5 cm.
Filter Paper, Glass 934-AH 7.0 cm
Forceps
Gooch Cruc, Fritted M Disc 50 ml.
Gooch Crucible, Porcelain 25 ml
Lab Stand
Laboratory Gas Lighter
Magnetic Stir Bar, 1 1/2 x 3/8
Magnetic Stir Bar, 1 x 3/8
Magnetic Stir Bar, 1/2 x 1 3/8
Magnetic Stir Bar, 1/2 x 3/8
Magnetic Stir Bar, 2 x 3/8
Magnetic Stir Bar, 5/8 x 7/8
Mortar & Pestle, Agate
Mortar, Porcelain 115x70mm
Mortar, Porcelain 130x80mm
Paddle, SS, 1/4"
Parafilm, 4" x 250'
Pestle, Porcelain
Pestle, Porcelain
Pinch Clamp
Pluro Rubber Stoppers
Polyprop Scoops, 3.5 x 1.5
Polyprop Scoops, 8 x 4.75
Rubber Policeman
Rubber Stopper Assortment
Rubber Tube, 1 ft.
Sieve Cover
Sieve, Bottom Pan
Sieve, Tyler 1000 um
Sieve, Tyler 106 um
Sieve, Tyler 300 um
Sieve, Tyler 45 um
Sieve, Tyler 53 um
Sieve, Tyler 600 um
Sieve, Tyler 75 um
Sieve, Tyler150 um
Spatula, Double Blade
Spatula, Micro-Spoon
Spatula, Stainless Steel 5 in.
Stir Bar Retriever
Stirrer Paddle
Stirring Rod, Polyprop
Stirring Rod, Tefzel
Stopcock Grease, Silicone
Stopper, one hole
Stopper, one hole
Stopwatch, Digital
Support Jack, Standard
Support Stand, PolyEth, Cntr. Rod
Teflon Tubing
Tongs, Crucible, Stainless
Tongs, Extended Jaw
Tongs, Safety
Tongs, Teflon Tipped
Tygon Tubing, 1/4 x 1/16
Weigh Paper, 3x3
Weigh Paper, 6x6
Weighing Boat, 3.5 x 5.25
Weighing Dish, Aluminum, Dispos.
Wipes, Staticide Towelettes

The level of manpower and contract lab resources vary and are typically dictated by the types of demonstration test program activity taking place. A temporary lab technician has been retained at the Bailly lab since May '92 to provide additional laboratory support during peak periods of analytical testing. This individual has been educated at the bachelor degree level in industrial engineering and also has demonstrated experience in plant laboratory environments.

Operations technicians have been instructed in sample collection procedures as well as trained to execute a handful of analytical determinations such as density, combined water, and weight percent solids. They will typically perform analyses as deemed necessary when the lab is not staffed (night shift) with technical personnel .

QUALITY ASSURANCE

Training

Training of the permanent laboratory technician was performed by the chemist who was accountable for laboratory operations. The chemist has had previous experience with FGD chemistry systems in addition to the technical discipline in analytical chemistry. Training in FGD analytical testing protocol requires a fundamental understanding of laboratory procedures and wet chemistry techniques. The technician was exposed to a five month training period in which the individual could become familiarized with the concepts of FGD chemistry and system operation. This training took place prior to start-up of the FGD system and was held concurrently with method validation activity.

A formal training program for plant operations technicians (Op Techs) has been recently implemented. A manual of test methods containing simplified analytical procedures was prepared for use by these individuals. The Op Techs were then assigned to the FGD lab over a period of time for hands-on training. The objective of this program was to allow the Op Techs to carry out a limited number of test procedures when lab personnel are not present.

Recordkeeping

Samples are logged onto daily worksheets and report forms to ensure sample identity and integrity. Sample identification codes are assigned as per the procedures outlined Table 1-1. Raw data from analyses is recorded on worksheets and retained on file in the laboratory. Data output from instruments are recorded on the worksheet and become part of this record. Final laboratory results are reported on a standardized spreadsheet known as the "daily report form" (Figure 3-2). Internal and external analytical results are entered into a large database through the use of Microsoft® Excel. This database, which is set up on a local area network, allows personnel to evaluate process relationships and overall system performance. Hardcopies of the Excel spreadsheets are sorted by process stream and filed chronologically in binders.

Equipment calibration and maintenance records are documented in the lab QA/QC notebook. The types of instrumentation and frequency of calibration checks required for Bailly laboratory equipment are listed in Table 3-5. Other quality assurance records that are being maintained are:

- intralaboratory testing results
- control charts
- analytical test method summaries
- contract lab proficient testing results

Samples which are submitted to outside laboratories for analysis are recorded in a sample log book. The information documented in the sample log entry and on the label affixed to the sample container include:

- sample type
- sample location
- sample date and time
- sample log notebook number
- FGD sample identification code
- contract lab name and project manager
- requested analyses
- shipping priority
- sample preservation technique

FIGURE 3-2. FGD LAB DAILY ANALYTICAL REPORT FORM

DATE	TIME	PH	TEMP C	DENSITY mg/L	SOLIDS wt %	Ca mmol/L	Mg ppm	CO3 mmol/L	SO3 mmol/L	SO4 mmol/L	Cl ppm	F ppm	Al ppm	SiO2 ppm	Mn ppm	Fe ppm	MOISTURE wt. %	COMBINED WATER wt. %
ABSORBER	7:00 AM												1/WEEK	1/WEEK	1/WEEK	1/WEEK		
GYPSUM	7:00 AM												1/WEEK	1/WEEK	1/WEEK	1/WEEK		
FILTRATE SUMP	7:00 AM																	
THICKENER U/F	7:00 AM																	
THICKENER O/F	7:00 AM																	

Table 3-5. Bailly FGD Lab Equipment Calibration Schedule

Equipment Type	Instrument	Control Chart Parameter	Frequency
Analytical Balances	Mettler AT-200	calibration weights (10 mg - 50 g)	weekly
	Mettler PM 6100	cal. weights (5, 10, 30, 50, 2000, 4000 g)	weekly
	Orion LOD Model II Moisture Analyzer	calibration weights (10 mg -10 g)	weekly
Eppendorf Pipettes	Blue Eppendorf (100 - 1000 µL)	weights at 100, 250, 500, 750, 1000 µL	biweekly
	Yellow Eppendorf (10 - 100 µL)	weights at 10, 25, 50, 75, 100 µL	biweekly
Ion Selective Electrodes	Fluoride electrode	Slope	daily
	Chloride electrode	Slope	daily
	pH probes	Slope	daily
Oven Temperature Monitoring	Thermolyne Oven	45, 100, 230 °C verify with thermometer	quarterly
	Thermolyne Muffle Furnace	230, 700, 1000 °C verify with thermocouple	quarterly
FGD Chloride Process Analyzer	Ion Selective Electrode	Zero potential	daily
		Span slope	daily
	Deionized water	Conductivity	weekly

Method Validation

Analytical methods selected for use at the Bailly laboratory were validated prior to the start-up of the FGD facility. The method selection process was driven by criteria such as specifications associated with contractual agreements. Additional methods or adaptations of methods which were evaluated have been used at other FGD labs. A notable portion of the test methods summarized in Table 2-6 have been commonly used in the construction materials industry and were acquired from highly reputable sources such as ASTM. Validation procedures were also used to assess alternate analytical methodology which provided quicker turnaround and were less complex in nature.

Intralaboratory evaluation of these procedures was performed using certified reference materials. Appropriate reference standards were identified based upon sample matrices and concentration levels which were similar to that of the materials used and produced at the Bailly facility. Table 3-6 summarizes the statistical results obtained from method validation testing performed at the Bailly FGD lab.

Quality Control

Quality control is the process of validating data reported by a laboratory. Procedures which support data validation may include instrument calibration, analysis of reagent blanks, analyte recovery studies, and intralaboratory evaluation of reference standards.

There are two fundamental principles associated with quality control. The first principle is that no two things are entirely identical even though they may appear similar in nature. The second principle is that no measurement is ever absolute. This statement implies that analytical techniques will always have some inherent variation.

Table 3-6. Method Validation Testing Results for Bailly Laboratory

Parameter	Reference Standard	Unit of measure	Certified Value	Reported Std. Deviations	Number of Replicates	Mean	Avg. % Recovery	Standard Deviation	Precision (2 std. dev.)
Carbonate	Calcium carbonate	wt. %	60.0	NA	9	55.5	92.5	2.4	4.8
	NIST 1c (limestone)	wt. %	54.4	NA	5	51.8	95.2	1.3	2.6
	Domtar GYP-A (gypsum)	wt. %	0.64	0.08	2	0.56	88	NA	NA
	Domtar GYP-B (gypsum)	wt. %	6.8	0.27	2	6.22	91.5	NA	NA
	Domtar GYP-C (gypsum)	wt. %	15.3	0.07	2	14.2	92.8	NA	NA
	Domtar GYP-D (gypsum)	wt. %	4.9	0.41	1	4.9	100	NA	NA
Combined Water	Internal gypsum standard	wt. %	NA	NA	10	20.26	NA	0.04	0.08
Free Water	Internal gypsum standard	wt. %	NA	NA	10	12.13	NA	0.04	0.07
Slurry Density	APC-200 gypsum	wt. %	NA	NA	10	1.105	NA	0.002	0.003
Silica	NIST 1c (limestone)	wt. %	6.84		1	7.21	105	NA	NA
	Domtar GYP-A (gypsum)	wt. %	0.45	0.13	1	0.53	118	NA	NA
	Domtar GYP-B (gypsum)	wt. %	1.05	0.12	3	0.94	89.5	0.09	1.7
	Domtar GYP-C (gypsum)	wt. %	3.5	0.2	1	3.39	96.9	NA	NA
Sulfate	Domtar GYP-B (gypsum)	wt. %	49.20	0.72	6	48.67	NA	0.65	1.31
Weight % Solids	APC-200 gypsum	wt. %	15.0	NA	5	14.84	NA	0.09	0.18
Chloride	Domtar GYP-D (gypsum)	ppm	225	30	9	229	NA	9.3	19
Fluoride	Domtar FGD-2 (gypsum)	ppm	320	NA	1	317	99.1	NA	NA
Sulfite	Sodium sulfite	mmol/L	20	NA	5	18.2	NA	0.6	1.1
pH	Internal gypsum standard	pH units	NA	NA	10	8.35	NA	0.06	0.12

Quality control charts are used to provide a graphical assessment of accuracy and precision for the analysis of specific components in a sample. A mean control chart (accuracy) reveals the variation around the central tendency (x) of different groups of data. A range control chart (precision) measures the variation within a given group.

Quality control charting of instrument calibration data, internal QC samples, and certified reference materials is in progress within the Bailly lab. Control samples have yet to be analyzed frequently enough to generate statistically sound control charts. Control limits are set at 2 standard deviations from the mean. A mean control chart representing chloride data obtained from method validation obtained on Domtars' GYP-D standard is presented in Figure 3-3. Outlined below is the intended program to be followed to monitor quality control of chemical analyses performed in the Bailly FGD lab.

Quality Control Sample	Parameter	Frequency
Internal Gypsum Standard	Calcium Sulfate Combined Water Chloride Fluoride Carbonate Magnesium Silica	weekly
Certified Reference Material	Calcium Sulfate Combined Water Chloride Fluoride Carbonate Magnesium Silica	monthly

Additional forms of laboratory quality assurance such as personnel credentials, quality of equipment and supplies, safe work practices, and standard operating procedures are discussed separately in other parts of section 6.2.4.

Figure 3-3. Mean Control Chart omtar GYP-D for Chloride

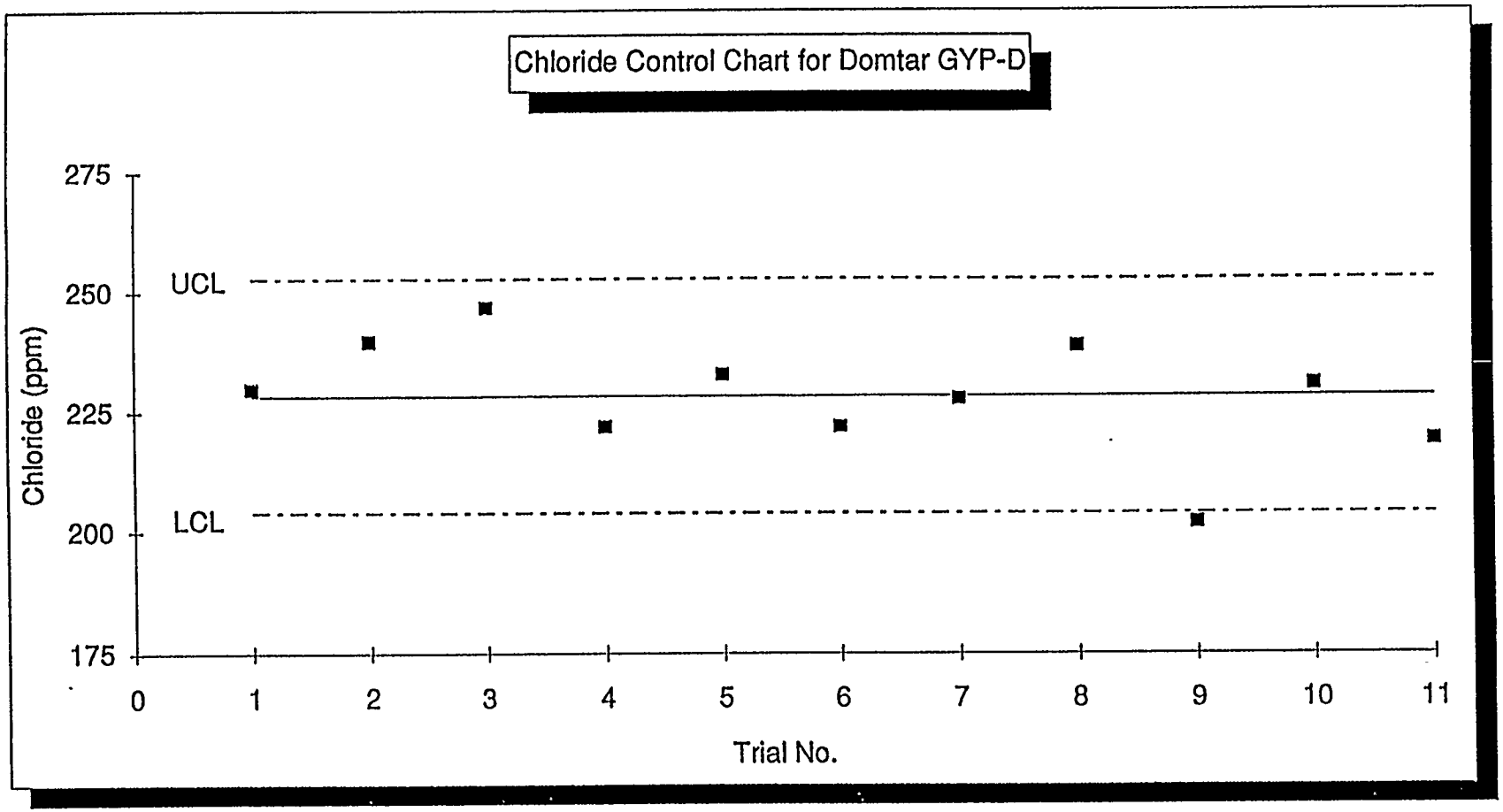

CONTRACT LAB SUPPORT

A literature search was conducted to obtain a list of prospective contract laboratories located in the midwest region which could provide quality analytical services to the Bailly FGD project. Specific areas of interest included experience in the following disciplines:

- Gypsum and limestone characterization
- Coal and fly ash determinations
- Water and wastewater analysis
- Solid and hazardous waste evaluation (TCLP / INLT)
- Radioactivity monitoring

These categories collectively represent those items which were required to be addressed during the execution of the EMP and DOE demonstration test plans. The monitoring of these process streams was also essential to evaluate performance of the FGD system.

The lab evaluation program (LEP) consisted of four phases, each with its own set of criteria, aimed at procuring and maintaining quality contract lab analytical resources for the Bailly FGD project. The scope of the evaluation program is provided in the following outline.

Phase I

- analytical instrumentation resources and testing capabilities
- scope of analytical services / technical expertise
- quality assurance / quality control program
- accessibility

Phase II

- evaluate performance using certified reference materials
- timeliness (sample turnaround)

Phase III

- cost evaluation of required analytical services

Phase IV (on-going)

- periodic performance monitoring
- accommodating priority requests
- sample turnaround
- technical support

Contacts with representatives from these analytical labs were established to obtain documentation on analytical services and professional qualifications. Site visits (Phase I) were scheduled with the potential candidates after reviewing appropriate credentials. The general purpose of the site visit was to provide a forum for information exchange between the interested parties. Activities which took place during the site visits included:

- presenting an overview of the Pure Air flue gas desulfurization process
- outlining Pure Air's analytical testing requirements
- discussing the contract lab evaluation program and selection process
- performing a walk through evaluation of laboratory facilities
- assessing the suitability of the contract laboratory
- obtaining references and analytical pricing information.

A select number of candidates were identified in the environmental and process support disciplines from this initial screening process. An evaluation of these labs (Phase II) was performed using certified reference materials (CRM) as blind samples. Results were compared against the known values of the CRM's and also with the data submitted by other labs participating in the evaluation program.

A summary of the results provided by the contract labs on gypsum and limestone CRM analysis can be found in Table 3-7. A rating system was devised to quantify the analytical performance of each lab. The assessment ratings found at the bottom of this table reflects the accuracy of the lab result as compared against the certified value for a given parameter. The lab reporting closest to the certified value (% recovery) received the highest rating. Identical ratings were assigned to lab results reported within the two sigma level.

Table 3-7. Contract Lab Performance Evaluation on Gypsum and Limestone

Parameter	Certified Value	Std. Deviations	Laboratory A Reported Value	Laboratory A % Recovery	Laboratory B Reported Value	Laboratory B % Recovery	Laboratory C Reported Value	Laboratory C % Recovery
GYPSUM								
CaO (%)	32.8	0.4	32.65	100%	31.6	96%	35.0	107%
SO3 (%)	41.0	0.6	41.77	102%	39.92	97%	51.9	127%
Combined Water (%)	17.80	0.08	18.12	102%	17.92	101%	17.4	98%
Chloride (ppm)	34	5	70	206%	100	294%	17000	50000%
Fe2O3 (%)	0.07	0.01	0.08	114%	0.15	214%	0.065	93%
Al2O3 (%)	0.17	0.04	0.17	100%	0.19	112%	0.253	149%
SiO2 (%)	1.05	12	0.86	82%	0.85	81%	0.225	21%
K2O (%)	0.05	0.01	0.02	40%	0.11	220%	0.116	232%
MgO (%)	1.80	0.1	1.64	91%	1.68	93%	1.82	101%
Na2O (%)	0.021	0.005	0.01	48%	0.05	238%	0.04	167%
CO2 (%)	5.0	0.2	4.87	97%	5.8	116%	2.3	46%
P2O5 (%) *	0.010	0.003	0.12	1200%	0.05	500%	NA	NA
SrO (%) *	0.14	0.02	0.01	7%	NA	NA	NA	NA
LOI (%) *	22.85	0.03	22.98	101%	23.4	102%	NA	NA
LIMESTONE								
CaO (%)	55.4		56.0	101%	54.0	97%	58.8	106%
SiO2 (%)	0.70		0.80	114%	0.86	123%	0.15	21%
MgO (%)	0.15		0.08	53%	0.16	107%	0.2	133%
Fe2O3 (%)	0.045		0.03	67%	0.14	311%	0.049	109%
Al2O3 (%)	0.12		0.12	100%	0.18	150%	0.118	98%
S (%)	0.007		NA	NA	0.03	429%	0.019	271%
SrO (%)	0.019		NA	NA	NA	NA	0.02	105%
TiO2 (%)	0.009		0.02	222%	0.02	222%	0.006	67%
CO2 (LOI) (%)	43.4		43.55	100%	43.3	100%	42.5	98%
K2O (%) *	0.02		<0.01	< 50%	0.07	350%	NA	NA
Na2O (%) *	0.02		0.04	200%	0.03	150%	NA	NA
P2O5 (%) *	0.006		<0.01	< 167%	0.06	1000%	NA	NA
MnO (%) *	0.010		0.009	90%	0.03	300%	NA	NA
Assessment Rating			82%		65%		57%	

* Denotes additional results provided by contract lab participants

Table 3-8 summarizes the data obtained from those labs reporting results pertaining to environmental matrices. The assessment rating used in Table 3-8 was defined as the percentage of a lab's reported data falling within the 95% confidence level.

The Phase III objective was to identify two labs within each of the specialized testing functions which would be capable of supporting the analytical testing protocol as defined by their performance in Phase II. After receiving quotations for specified analytical services from the final candidates, primary and secondary vendors were selected based upon the criteria outlined in the lab evaluation program.

Phase IV activities were developed to ensure the selected contract labs would consistently provide analytical services which would meet the expectations of project personnel. Measurement tools used to assess the quality of services provided include: periodic analytical performance evaluations, tracking sample turnaround time, flexibility for handling priority (rush) analyses, and monitoring analytical service charges.

Appendix A contains a list of contract laboratories which were used to support the physical and chemical testing requirements associated with the operation of the Pure Air Bailly Generating Station.

Table 3-8. Environmental Contract Lab Performance Evaluation

Parameter	Certified Value	Confidence Interval (95%)	Laboratory D		Laboratory E		Laboratory F		Laboratory G		Laboratory H	
			Reported Value	% Recovery	Reported Value	% Recovery	Reported Value	% Recovery	Reported Value	% Recovery	Reported Value	% Recovery
WASTEWATER (ppm)												
Dissolved Solids	1260	1064-1521	1160	92.1%	1170	92.9%	1200	95.2%	1300	103%		
Chloride	208	193-222	196	94.2%	190	91.3%	190	91.3%	200	96.2%		
Fluoride	8.58	7.88-9.00	9.08	106%	8.3	97%	7.2	84%	8.7	101%		
Sulfate	236	205-260	228	96.6%	157	66.5%	245	104%	230	97.5%		
Oil & Grease	63.7	NA	60	94%	67	105%	22	35%	44	69%		
BOD	30.5	20-38	16.8	55.1%	29	95%	26	85%	23	75%	20	66%
COD	50.9	43-58	44.4	87.2%	43	84%	49	96%	27	53%	52	102%
TOC	19.8	17-23	21	106%	15.1	76.3%	21	106%	20	101%	20	101%
Cyanide (total)	0.121	0.088-0.154	0.118	97.5%	0.087	72%	0.068	56%	0.081	67%	0.096	79%
Phenols (total)	0.067	0.051-0.083	0.073	109%	0.077	115%	0.05	75%	0.063	94%		
DRINKING WATER (ppb)												
Antimony	149	112-176	193	130%	180	121%	180	121%	160	107%	140	94.0%
Arsenic	156	117-184	200	128%	160	103%	210	135%	160	103%	160	103%
Cadmium	125	103-148	142	114%	154	123%	150	120%	130	104%	120	96%
Selenium	37.4	28-44	46	123%	41	110%	35	94%	41	110%	< 0.02	< 0.1%
Silver	42.8	35-51	53	124%	8.6	20%	57	133%	36	84%	40	93%
Chromium	207	170-244	237	114%	258	125%	270	130%	220	106%	230	111%
Copper	173	142-204	195	113%	208	120%	200	116%	190	110%	190	110%
Nickel	178	146-210	204	115%	227	128%	230	129%	190	107%		
Thallium	54.1	41-64	56	104%	57	105%	61	113%	< 390	< 721%		
Iron	426	349-503	460	108%	502	118%	490	115%	430	101%	440	103%
Lead	130	107-153	145	112%	164	126%	150	115%	NA	NA		
Mercury	7.35	5.5-9.2	6.39	86.9%	7.7	105%	4.9	67%	7	95%	3	41%
Hardness	84.4	69-100	92.8	110%	106	126%	96	114%	94	111.4%	92.5	110%

Table 3-8. Environmental Contract Lab Performance Evaluation

Parameter	Certified Value	Confidence Interval (95%)	Laboratory D		Laboratory E		Laboratory F		Laboratory G		Laboratory H	
			Reported Value	% Recovery	Reported Value	% Recovery	Reported Value	% Recovery	Reported Value	% Recovery	Reported Value	% Recovery
REGULATED VOLATILES (ppb)												
Benzene	1.61	0.60-2.4	1.46	90.7%	2	124%	1.6	99%	< 5	< 311%	1.4	87%
Carbon Tetrachloride	3.06	2.1-4.3	2.36	77.1%	3	98%	2.4	78%	< 5	< 164%	2.7	88%
1,4-Dichlorobenzene	5.10	1.8-9.7	5.14	101%	6	118%	3.3	65%	5	98%	4.8	94%
1,2-Dichloroethane	10.2	5.0-16	11	108%	12	118%	11	108%	12	118%	8.2	80%
1,1-Dichloroethene	18.2	3.4-26	20	110%	21	115%	18	99%	22	121%	19	104%
1,1,1-Trichloroethane	3.79	2.0-6.1	4.33	114%	3	79%	2.8	74%	5	132%	3.4	90%
Trichloroethene	13.6	9.6-21	13	95.6%	12	88%	12.4	91%	12	88%	12	88%
Vinyl chloride	1.20	0.18-3.0	< 5	< 417%	< 0.5	< 42%	0.33	28%	< 10	< 833%	0.7	58%
DRIED SLUDGE (ppm)												
Arsenic (ppm)	200	150-240	170	85.0%	217	109%	180	90.0%	170	85.0%		
Cadmium	7.6	6.0-9.2	7.31	96.2%	9.24	122%	7.9	104%	5.6	74%		
Chromium	38	30-50	38.8	102%	38.3	101%	43	113%	30	79%		
Mercury	100	65-140	69.2	69.2%	133	133%	72	72%	100	100%		
Molybdenum	12	9.0-15	10.9	90.8%	10	83%	29	242%	25	208%		
Selenium	202	140-240	168	83.2%	234	116%	140	69.3%	190	94.1%		
Lead	510	400-610	414	81.2%	431	84.5%	510	100%	430	84.3%		
Nickel	21	16-26	22.8	109%	20.6	98.1%	22	105%	16	76%		
Zinc	1800	1400-2200	1440	80.0%	1530	85.0%	1800	100%	2400	133%		
Aluminum	10200	8200-12300	8450	82.8%	8220	80.6%	10000	98.0%	14000	137%		
Iron	16700	13300-20000	15100	90.4%	14800	89%	17000	101.8%	14000	83.8%		
Assessment Rating			85%		71%		71%		82%		91%	

LAB SAFETY

The mission of a safety program is to provide for a safe, healthy, accident-free work environment. A secondary objective is to prevent damage to company assets. At Pure Air, "there is nothing more important than safety." This safety philosophy applies to the FGD laboratory which is part of the overall plant safety program.

Bailly staff members were required to participate in the Federal Right-To-Know Program which communicates the potential hazards of substances used in the workplace and how the individual can protect themselves. The program addressed five key topics which included:

- informing employees of operations where chemical hazards are present
- requirements of the Hazard Communication Law and the availability of the facility's written Federal Right-To-Know Program
- chemical labeling
- chemical inventorying and hazard assessment
- reviewing Material Safety Data Sheets to obtain hazard information

The use of personal protective equipment (PPE) is a condition of employment and must be worn or used as determined by the safe work practice or hazard assessment. At a minimum, steel toe safety shoes, safety glasses with side shields, and hard hats are required when on-site at the Bailly facility. The use of additional PPE such as hearing protection, gloves, and protective clothing may be required when entering into specific areas of the FGD unit.

In addition to the above, the following general guidelines have been established for the Bailly laboratory:

- hygiene - food and beverages are not permitted to be stored or consumed in the lab. Smoking is prohibited on all Pure Air property. Appropriate laboratory dress is dictated by the work performed.
- housekeeping - labs should be kept neat and clutter free. Cleanups should be performed at the completion of an operation or at the end of the day.

- waste disposal - spilled chemicals must be cleaned up immediately and disposed of properly.
- open flames - open flames are permitted except where specifically posted or where flammable vapors are in close proximity.
- labeling - chemicals received from outside sources must be affixed with a label containing the following information: chemical name, date of receipt and expiration, and a coded NFPA diamond hazard assessment.
- protective devices - protective shields, relief valves, safety signs (acid, hot), rubber carriers for transporting glass bottles, and spill containment supplies are to used as necessary.
- gas equipment - cylinders are to be secured and capped when not in use. Gas lines should be labeled when passing out of sight from the source to the point of use.

A comprehensive listing of safe work practices[14] (SWP) or operational procedures (SOP) of laboratory functions is available at the Bailly FGD lab. The SWP's were developed by Air Products' research staff in order to train personnel proper and safe methods for performing specific laboratory work. The safe work practice is a detailed procedure for a particular operation that outlines:

- steps involved in completing an operation
- potential hazards
- personal protective equipment required
- procedures for emergency shutdown

Appendix C contains a list of safe work practices which are applicable to operations performed in the Bailly FGD laboratory.

Table 3-9 contains a listing of safety and general housekeeping supplies which are available for lab personnel. Additional items such as first aid cabinets, Scott Air Packs, atmospheric monitors, and other PPE are in close proximity and available for use as needed. Weekly safety meetings address personnel training in areas such as : CPR and first aid, firefighting, safety permit systems, forklift operation, and electrical safety. Safety meeting agendas also cover topics which are specific to functional tasks performed at the facility.

Table 3-9. Lab Safety and Maintenance Items

Acid Bottle Carrier, Rubber	Lab Coats
Chemical ID Labels	Leather Gloves
Face Shield, Safety	Mercury Sponge w/ Activator
Fire Extinguisher, ABC Type	MSDS Binder
Gloves, Vinyl Disposable Large	Neutrasorb, Acid Spill, 3.2 kg.
Goggles, Safety	Safety Glasses
Hand Protector, Hot Hand	Safety Signs - Miscellaneous
Hazard Rating Guide	Solusorb, 1.1 kg.
Lab Aprons	Spill-X-A
Beaker Brush	Pipet Drawer Organizer
Clamp Drawer Organizer	Stopper Drawer Organizer
Cylinder Brush	Tray, Polyprop 15x20x3
Drawer Liners, Nalgene 18"x50'	Pipet Rack
Glass Cleaner	Sample Bags
Kimwipes EX-L, 12x12	Liqui-Nox Detergent
Paper Towels	Utility Carrier, Nalgene

SECTION 6.2.4

REFERENCES

1. 1990 Annual Book of ASTM Standards; Section 5: Petroleum Products, Lubricants, and Fossil Fuels, Vol. 5.05: Gaseous Fuels; Coal and Coke, ASTM, Philadelphia, PA, 1990.

2. 1990 Annual Book of ASTM Standards; Section 4: Construction, Vol. 4.01: Cement; Lime; Gypsum, ASTM, Philadelphia, PA, 1990.

3. Test Methods for Evaluating Solid Waste; November 1986, SW-846, 3rd ed.; U.S. Environmental Protection Agency. Office of Solid Waste and Emergency Response. U.S. Government Printing Office: Washington, DC, 1986. Vols. 1, 2.

4. Methods for Chemical Analysis of Water and Wastes; Environmental Monitoring and Support Laboratory. U.S. Environmental Protection Agency, Office of Research and Development. Cincinnati, OH, March 1983; EPA-600/4-79-020.

5. Code of Federal Regulations, Title 40 - Protection of Environment, Part 261.21, Characteristic of Ignitability. U.S. Environmental Protection Agency. U. S. Government Printing Office: Washington, DC, July 1992.

6. Varian Analytical Methods for Graphite Tube Atomizers; Rothery, E. Ed.; Varian Techtron Pty. Limited, Mulgrave, Victoria, Australia, 1982.

7. FGD Chemistry and Analytical Methods Handbook; Chemical and Physical Test Methods, Electric Power Research Institute, EPRI CS-3612, Vol. 2, Project 1031-4; Palo Alto, CA, July 1984.

8. Standard Methods for the Examination of Water and Wastewater; 17th ed.; Clesceri, L. S. et al., Eds.; American Public Health Association: Washington, DC, 1989.

9. Standard Methods for the Examination of Water and Wastewater; 16th ed.; Greenberg, A. E. et al., Eds.; American Public Health Association: Washington, DC, 1985.

10. Sampling and Analysis Procedure, Elkraft AVV Project, Drawing no. 7799 B406-00100, Rev. P; Mitsubishi Heavy Industries, LTD: Tokyo, Japan; August 1989.

11. Kriebel B. W., Pure Air Laboratory Notebook No. 1000, Pure Air on the Lake: Chesterton, IN, March 1992.

12. Chemical Gypsum Test Methods, USG Corporation Research Center: Libertyville, IL, 1989.

13. Kanare H. M., Chemical and Physical Analyses for Bailly FGD Project, Construction Technology Laboratories Inc; Project No. 404058, Skokie, IL.

14. Safe Work Practices for R&D Laboratories, Vols.1, 2; R&D Safety Policy Committee, Air Products and Chemicals, Inc: Allentown, PA; September 1992.

APPENDIX A

CONTRACT LABORATORIES

The following list of contract laboratories supported test programs at the Bailly FGD facility by providing analytical services in the following specialized areas:

Construction Technology Laboratories, Inc. (primary)
5420 Old Orchard Road
Skokie, IL

Gypsum	Process Intermediates	Limestone	Fly ash
General metals Particle sizing Microscopy Phase identification	Elemental analysis Particle sizing Microscopy	General metals Particle sizing	General metals Phase identification

---

Standard Laboratories, Inc.
1530 N. Cullen Avenue
Evansville, IN 47715

Coal	Fly ash
Proximate analysis Ultimate analysis General metals	General metals

---

Sherry Laboratories (primary)
2203 South Madison Street
Muncie, IN 47302

Process Water	Wastewater Influent	Wastewater Effluent	Gypsum	Fly Ash
General metals	General metals	General metals	TCLP INLT	TCLP INLT

Teledyne Isotopes - Midwest Laboratory
700 Landwehr Road
Northbrook, IL 60062-2310

Gypsum	Limestone	Coal	Fly Ash
Radioactivity	Radioactivity	Radioactivity	Radioactivity

APPENDIX B

LABORATORY PRODUCTS DISTRIBUTORS

Air Products Specialty Gases Catalog 1
Air Products Specialty Gases Equipment Catalog 2
Air Products and Chemicals, Inc.
Specialty Gas Department
Chicago, IL 60628

Catalog Handbook of Fine Chemicals
Aldrich Chemical
1001 West Saint Paul Avenue
Milwaukee, WI 53233

Brammer Standards Catalog -1992
Brammer Standard Co.
14603 Benfer Road
Houston, TX 77069

Fischer Catalog - 1992
Fischer Scientific
1600 W. Glenlake Avenue
Itasca, IL 60143

Kewuanee Scientific Corporation
C. E. Shomo & Associates
P.O. Box 405
Evanston, IL 60204

Lab Glass General Catalog - 1992
Lab Glass, Inc.
1172 North West Blvd.
Vineland, NJ 08360

General Catalog - 1991
Lab Safety Supply, Inc.
P.O. Box 1368
Janesville, WI 53547-1368

Millipore Direct Catalogue
Millipore Products Division
Bedford, MA 01730

NIST Standard Reference Materials Catalog 1991-1992
U.S. Department of Commerce
Technology Administration
National Institute of Standards and Technology
Standard Reference Materials Program
Bldg. 202, Room 204
Gaithersburg, MD 20899

Orion Research Inc.
The Schrafft Center
529 Main Street
Boston, MA 02129

Biochemicals, Organic Compounds for Research and Diagnostic Reagents
Sigma Chemical Company
P.O. Box 14508
St. Louis MO 63178

VWR Scientific Apparatus Catalog 1991-92
VWR Scientific
P.O. Box 66929
Chicago, IL 60666

APPENDIX C

SAFE WORK PRACTICES[14]

SWP Reference	TITLE
A-3	Dispensing of Chemicals/Solvents into Glassware
A-8	Handling Hot Acids
A-11	Dispensing of Concentrated Acids
B-1	Connecting Rubber Tubing with Glass Rod or Tubing
B-2	Inserting Thermometer into Cork or Rubber Stopper
B-3	Removal of Tubing from Glassware
B-4	Handling and Cleaning of Glassware
B-6	Use of Hotplates
B-9	Working with Open Flames (Bunsen Burner)
B-10	Use of Lab Furnaces
B-21	Gas Cylinder Transport/Changing
B-24	Use of a pH meter
B-25	Preparation of Standard Acid and Caustic Solutions
B-29	Use of Utility Knife for Opening Bags and Boxes
C-8	Charging/Removing Samples from Muffle Furnace
G-8	Handling Hydrofluoric Acid
H-1	Spill Handling Procedures - General
H-2	Clean Up of Broken Glassware
H-3	Safe Handling of Mercury (Spill Cleanup)
H-4	Clean Up of Flammable Liquid Spill

APPENDIX E
DATA MACRO SOURCE CODE

	B
1	
2	This EXCEL macro will the the raw spreadsheet file and convert it into
3	a dailly average file win whcih there are 24 one hour averages.
4	
5	
6	
7	mc001 takes the plantdata file bmmddyDY.wk1 and generates an average files
8	called bmmddyav.xls which has 24 1-hr averages for the day.
9	this macro also adds the day to bplantav.xls and removes the oldest day.
10	mc001
11	=ECHO(TRUE)
12	=DIRECTORY("u:\process\data_wks")
13	=ERROR()
14	FORMULA("",K20)
15	FORMULA("#N/A",K21)
16	HIDE()
17	=SET.NAME("FILEARRAY",FILES("*.wk1"))
18	=DIALOG.BOX(getfilename)
19	=$L$12
20	=IF(LOOP=FALSE)
21	=CLOSE()
22	=QUIT()
23	=END.IF()
24	=DIRECTORY("U:\process\DATA_WKS")
25	=SET.NAME("FILE",DAYRPTR2.XLM!$K$29)
26	=OPEN(FILE)
27	=ACTIVATE(FILE)
28	=ECHO(TRUE)
29	=EDIT.COLOR(6,224,60,31)
30	=SELECT("R1:R7")
31	=COPY()
32	VPAGE(10)
33	=SELECT("R300C1")
34	=PASTE()
35	=CANCEL.COPY()
36	=SELECT("R307C2")
37	=FORMULA("=AVERAGE(R[-299]C:R[-293]C)")
38	=SELECT("R307C2")
39	=COPY()
40	=SELECT("R307C3:R307c125")
41	=PASTE()
42	=CANCEL.COPY()
43	=HPAGE(-5)
44	=SELECT("R307C1")
45	=FORMULA("0.333333333333333")
46	=SELECT("C1","R280C1")
47	=FORMAT.NUMBER("h:mm")

	B
48	=SELECT("R308C2")
49	=FORMULA("=AVERAGE(R[-293]C:R[-281]C)")
50	=SELECT("R308C2")
51	=COPY()
52	=SELECT("R308C3:R308c125")
53	=PASTE()
54	=CANCEL.COPY()
55	=SELECT("R308C1")
56	=FORMULA("9:00")
57	=SELECT("R309C2")
58	=FORMULA("=AVERAGE(R[-281]C:R[-270]C)")
59	=SELECT("R309C1")
60	=FORMULA("10:00")
61	=SELECT("R310C1")
62	=FORMULA("11:00")
63	=SELECT("R310C2")
64	=FORMULA("=AVERAGE(R[-270]C:R[-259]C)")
65	=SELECT("R311C1")
66	=FORMULA("12:00")
67	=SELECT("R311C2")
68	=FORMULA("=AVERAGE(R[-139]C:R[-128]C)")
69	=SELECT("R312C1")
70	=FORMULA("13:00")
71	=SELECT("R312C2")
72	=FORMULA("=AVERAGE(R[-248]C:R[-237]C)")
73	=SELECT("R313C1")
74	=FORMULA("14:00")
75	=SELECT("R313C2")
76	=FORMULA("=AVERAGE(R[-237]C:R[-226]C)")
77	=SELECT("R314C1")
78	=FORMULA("15:00")
79	=SELECT("R314C2")
80	=FORMULA("=AVERAGE(R[-226]C:R[-215]C)")
81	=SELECT("R315C1")
82	=FORMULA("16:00")
83	=SELECT("R315C2")
84	=FORMULA("=AVERAGE(R[-215]C:R[-204]C)")
85	=SELECT("R316C1")
86	=FORMULA("17:00")
87	=SELECT("R316C2")
88	=FORMULA("=AVERAGE(R[-204]C:R[-193]C)")
89	=SELECT("R317C1")
90	=FORMULA("18:00")
91	=SELECT("R317C2")
92	=FORMULA("=AVERAGE(R[-193]C:R[-182]C)")
93	=SELECT("R318C1")
94	=FORMULA("19:00")

	B
95	=SELECT("R318C2")
96	=FORMULA("=AVERAGE(R[-182]C:R[-171]C)")
97	=SELECT("R319C1")
98	=FORMULA("20:00")
99	=SELECT("R319C2")
100	=FORMULA("=AVERAGE(R[-267]C:R[-256]C)")
101	=SELECT("R320C1")
102	=FORMULA("21:00")
103	=SELECT("R320C2")
104	=FORMULA("=AVERAGE(R[-160]C:R[-149]C)")
105	=SELECT("R321C1")
106	=FORMULA("22:00")
107	=SELECT("R321C2")
108	=FORMULA("=AVERAGE(R[-149]C:R[-138]C)")
109	=SELECT("R322C1")
110	=FORMULA("23:00")
111	=SELECT("R322C2")
112	=FORMULA("=AVERAGE(R[-138]C:R[-127]C)")
113	=SELECT("R323C1")
114	=FORMULA("24:00")
115	=SELECT("R323C2")
116	=FORMULA("=AVERAGE(R[-127]C:R[-116]C)")
117	=SELECT("R323C1")
118	=FORMULA("0:00")
119	=SELECT("R324C1")
120	=FORMULA("1:00")
121	=SELECT("R324C2")
122	=FORMULA("=AVERAGE(R[-116]C:R[-105]C)")
123	=SELECT("R325C1")
124	=FORMULA("2:00")
125	=SELECT("R325C2")
126	=FORMULA("=AVERAGE(R[-116]C:R[-105]C)")
127	=SELECT("R326C1")
128	=FORMULA("3:00")
129	=SELECT("R326C2")
130	=FORMULA("=AVERAGE(R[-94]C:R[-83]C)")
131	=SELECT("R327C1")
132	=FORMULA("4:00")
133	=SELECT("R327C2")
134	=FORMULA("=AVERAGE(R[-83]C:R[-72]C)")
135	=SELECT("R328C1")
136	=FORMULA("5:00")
137	=SELECT("R328C2")
138	=FORMULA("=AVERAGE(R[-72]C:R[-61]C)")
139	=SELECT("R329C1")
140	=FORMULA("6:00")
141	=SELECT("R329C2")

	B
142	=FORMULA("=AVERAGE(R[-61]C:R[-50]C)")
143	=SELECT("R330C1")
144	=FORMULA("7:00")
145	=SELECT("R330C2")
146	=FORMULA("=AVERAGE(R[-50]C:R[-39]C)")
147	=SELECT("R309C2:R330C2")
148	=COPY()
149	=SELECT("R309C3:R309c125")
150	=PASTE()
151	=CANCEL.COPY()
152	
153	=SELECT("R302C2")
154	=FORMAT.NUMBER("dd/mm/yy")
155	=SELECT("R300:R330")
156	=COPY()
157	=SELECT("R333")
158	=PASTE.SPECIAL(3,1,FALSE,FALSE)
159	=CANCEL.COPY()
160	format("0.000")
161	
162	=SELECT("R8:R330","R330C1")
163	=ERROR(FALSE)
164	=EDIT.DELETE(2)
165	=ERROR(TRUE)
166	=SELECT("R1:R7","R7C1")
167	=EDIT.DELETE(2)
168	=SELECT("R5C2")
169	=FORMAT.NUMBER("dd-mm-yy")
170	=REPLACE(DAYRPTR2.XLM!$K$29,7,6,"av.XLS")
171	=DIRECTORY("U:\process\DATA_AVG")
172	=ERROR(FALSE)
173	=SAVE.AS(NewDataFileName,1,"",FALSE,"",FALSE)
174	=ERROR(TRUE)
175	=OPEN("bplantav.xls")
176	=ECHO(TRUE)
177	=SELECT("R10C2")
178	=SELECT.END(4)
179	=SET.NAME("LASTROWOFDATA",ROW(ACTIVE.CELL()))
180	=IF(LASTROWOFDATA>350)
181	=SELECT("R10C1")
182	=SELECT.END(4)
183	=SET.NAME("LASTROW",ROW(ACTIVE.CELL())-1)
184	=SELECT("R9:"&+"R"&+LASTROW)
185	=EDIT.DELETE(2)
186	=END.IF()
187	=SELECT("R7C2")
188	=SELECT.END(4)

	B
189	=SELECT("R[1]C[-1]")
190	=FORMULA((MID(NewDataFileName,2,2)&+"/"&MID(NewDataFileName,4,2)&+"/"&+
191	=ACTIVATE(NewDataFileName)
192	=SELECT("R10C1:R33C125")
193	=COPY()
194	=ACTIVATE("BPLANTAV.XLS")
195	=SELECT("rc(1)")
196	=PASTE()
197	
198	
199	
200	
201	=ERROR(FALSE)
202	=SAVE.AS("bplantav.xls",1,"",FALSE,"",FALSE)
203	=ERROR(TRUE)
204	=ACTIVATE(NewDataFileName)
205	=CLOSE(FALSE)
206	
207	
208	
209	
210	
211	
212	
213	
214	
215	
216	
217	This macro opens up the day file bplantav.xls which has two weeks of data for every hr
218	and averages the 24 hours in one line and saves it to bplant24.xls
219	
220	
221	
222	
223	
224	mc002
225	DIRECTORY("U:\process\DATA_AVG")
226	SET.NAME("DOCS",DOCUMENTS())
227	FOR("COUNTER",1,COLUMNS(DOCS))
228	INDEX(DOCS,counter)
229	IF(nameofdocumenta"bplantav.xls")
230	ACTIVATE("bplantav.xls")
231	END.IF()

Appendix E Data Macro Source Code

	B
232	IF(nameofdocumenta"bplantav.xls",BREAK())
233	NEXT()
234	IF(nameofdocumenta"bplantav.xls",,(OPEN("bplantav.xls",,"TRUE")))
235	GOTO(B224)
236	=ACTIVATE("bplantav.xls")
237	
238	=ECHO(TRUE)
239	
240	=SELECT("R8C2")
241	=SELECT.END(4)
242	=SET.NAME("lastrowofdata_a",ROW(SELECTION()))
243	
244	=SELECT("R[-23]C[-1]")
245	=SET.VALUE(date,0)
246	=SET.NAME("counter",-1)
247	=SET.NAME("loopcounter",0)
248	=WHILE(date=0)
249	=SET.NAME("counter",counter+1)
250	=SET.NAME("nextrow","r"&+"("&+counter&+")"&+"c1")
251	=SELECT(nextrow)
252	=ROW(ACTIVE.CELL())
253	=GET.CELL(5)
254	=SET.NAME("counter",0)
255	=IF(LOOPCOUNTER=10,BREAK())
256	=SET.NAME("loopcounter",LOOPCOUNTER+1)
257	
258	=NEXT()
259	=rowNumber
260	
261	=SELECT("R8C2")
262	=SELECT.END(4)
263	=SELECT("R[-23]C[-1]")
264	=SET.VALUE(cellcontent,0)
265	=SET.NAME("counter",1)
266	=SET.NAME("loopcounter",0)
267	=WHILE(cellcontent=0)
268	=SET.NAME("counter",counter-1)
269	=SET.NAME("nextrow","r"&+"("&+counter&+")"&+"c1")
270	=SELECT(nextrow)
271	=SET.NAME("rowNumber",ROW(ACTIVE.CELL()))
272	=GET.CELL(5)
273	=SET.NAME("counter",0)
274	=IF(LOOPCOUNTER=10,BREAK())
275	=SET.NAME("loopcounter",LOOPCOUNTER+1)
276	=NEXT()
277	
278	=rowNumber

	B
279	=SELECT("r"&+lastrowofdata_a&+"c2")
280	=SELECT.END(2)
281	=SET.NAME("lastcolumnnumber",COLUMN(ACTIVE.CELL()))
282	=SET.NAME("rownumberOfAverage",lastrowofdata_a+1)
283	=SET.NAME("loopcounter",3)
284	=WHILE(LOOPCOUNTER<lastcolumnnumber+1)
285	=SELECT("R"&+rowNumber&+"C"&+LOOPCOUNTER&+":r"&+lastrowofdata_a&+"C"&+
286	=DEFINE.NAME("AVERAGINGRANGE",SELECTION())
287	=SELECT.END(4)
288	=SELECT("R(1)C")
289	=FORMULA("=AVERAGE(AVERAGINGRANGE)")
290	=COPY()
291	=PASTE.SPECIAL(3,1,FALSE,FALSE)
292	=CANCEL.COPY()
293	=SET.NAME("LOOPCOUNTER",LOOPCOUNTER+1)
294	=NEXT()
295	
296	=SET.NAME("rownumberofaveragedData",ROW(ACTIVE.CELL()))
297	
298	=SELECT("R"&+rowNumber&+"C1")
299	=COPY()
300	=SELECT("R"&+rownumberofaveragedData&+"C1")
301	=PASTE()
302	=CANCEL.COPY()
303	
304	
305	=SELECT("R"&+rownumberOfAverage)
306	=COPY()
307	
308	=OPEN("BPLANT24.XLS",,,,,"PLANT")
309	=SELECT("r7c1")
310	=SELECT.END(4)
311	=SELECT("r(1)c")
312	=PASTE.SPECIAL(3,1,FALSE,FALSE)
313	=CANCEL.COPY()
314	=SELECT("r7c1")
315	=SELECT.END(4)
316	SELECT("rc(1)")
317	INSERT(1)
318	=SAVE()
319	=CLOSE(FALSE)
320	=EDIT.DELETE(3)
321	=SAVE()
322	=CLOSE(FALSE)
323	=SET.NAME("DOCS_A",DOCUMENTS())
324	=FOR("COUNTER_A",1,COLUMNS(DOCS_A))
325	=INDEX(DOCS_A,COUNTER_A)

	B
326	=ACTIVATE(NAMEOFALLopenFiles)
327	=IF(NAMEOFALLopenFiles="XMAKEAL2.XLM",,CLOSE(FALSE))
328	=NEXT()
329	=ERROR(FALSE)
330	=QUIT()
331	=END.IF()
332	=ERROR(FALSE)
333	=QUIT()
334	=RETURN()
335	=lastcolumnnumber

APPENDIX F
MATERIAL BALANCE SPREADSHEET

Appendix F Material Balance Spreadsheet

	A	B	C
1			
2			
3	Date		=B125
4			
5	Unit # 7	MW	=AVERAGE(D130:D153)
6	Unit #8	MW	=AVERAGE(E130:E153)
7	Inlet Temp	F	=AVERAGE(L130:L153)
8	Outlet Temp	F	=AVERAGE(CJ130:CJ153)
9	Inlet SO2	PPM(w)	=AVERAGE(N130:N153)
10	Outlet SO2	PPM(w)	=AVERAGE(S130:S153)
11	ABS_RECIRC	GPM	136800
12	ABS_Ca	MMOL/L	=H173
13	ABS_CO3	MMOL/L	=M173
14	ABS_SO4	MMOL/L	=E173
15	ABS_SGU	gm/l	=K173
16	ABS_SOLIDS	%	=I173
17	TK_FEED FLOW	GPM	=AVERAGE(CI130:CI153)
18	FILT_SUMP_Ca	MMOL/L	=H174
19	FILT_SUMP_CO3	MMOL/L	=M174
20	FILT_SUMP_SO4	MMOL/L	=E174
21	FILT_SUMP_SGU	gm/l	=K174
22	FILT_SUMP_SOLIDS	%	=I174
23	TK/OF_Ca	MMOL/L	=H176
24	TK/OF_CO3	MMOL/L	=M176
25	TK/OF_SO4	MMOL/L	=E176
26	TK/OF_SGU	gm/l	=K176
27	TK/OF_SOLIDS	%	=I176
28	TK/UF_Ca	MMOL/L	=H178
29	TK/UF_CO3	MMOL/L	=M178
30	TK/UF_SO4	MMOL/L	=E178
31	TK/UF_SGU	gm/l	=K178
32	TK/UF_SOLIDS	%	=I178
33	TK/OF FLOW RATE	GPM	=$C$17*(0.01*$C$32-0.01*$C$22)/(0.0

	A	B	C
34	TK/OF TO WWT	GPM	=AVERAGE(AK130:AK153)
35	Limestone Purity	%	97.5
36	Gypsum Moisture	%	=I169
37	Abs Chloride	ppm	=L173
38	Gas Flow	ACFM	=561950+344.5*(C5+C6)+4.97*(C5+C6
39	Gas Flow	lbs/hr	=2356.86*C38/(460+C7)
40	Inlet SO2	lbs/hr	=5125.25*10^(-6)*C38*C9/(460+C7)
41	SO2 Removal	%	=(D9-D10)/D9*100
42	SO2 Removal Rate	lbmoles/hr	=C40*C41/6406
43	Stoich Ratio	mole(fr)	=(C12+C13)/C12
44	**ABS Solids formation**		
45	CaCO3 in Abs	lbs/hr	=C42*(C43-1)*100.09
46	CaSO4.2H2O in Abs	lbs/hr	=C42*172.17
47	Inerts	lbs/hr	=C42*C43*100.09*(100/C35-1)
48	Total Solids	lbs/hr	=SUM(C45:C47)
49	Water	lbs/hr	=C48*(100/C16-1)
50	Total Slurry	lbs/hr	=SUM(C48:C49)
51	CaCO3 in ABS	fr	=C45/C48
52	CaSO4.2H2O in ABS	fr	=C46/C48
53	Inerts in ABS	fr	=C47/C48
54			
55			
56			
57	STREAM DATA SUMMARY - BAILLY AFGD		
58			
59			
60			
61			
62	Date	=C3	
63	Test No.	=C4	
64			
65			
66			

Appendix F Material Balance Spreadsheet

	A	B	C
67	STREAM No.	101	102
68		ABSORBER	ABSORBER
69		RECIRCULATION	BLEED
70			
71	TEMPERATUE (F)	=C8	=C8
72	SOLIDS CONTENT (%)	=C16	=C16
73	DENSITY (SGU)	=C15	=C15
74			
75	FLOW RATE		
76	CaCO3 (lbs/hr)	=C11*8.34*60*B72/100*C51	=C45
77	CaSO4.2H2O (lbs/hr)	=C11*8.34*60*B72/100*C52	=C46
78	Inerts (lbs/hr)	=C11*8.34*60*B72/100*C53	=C47
79	Solids (lbs/hr)	=C11*8.34*60*B72/100*B73	=C48
80	Water (lbs/hr)	=C11*8.34*60*B73*(1-B72/1	=C79*(100/C72-1)
81	Total Slurry (lbs/hr)	=SUM(B79:B80)	=SUM(C79:C80)
82	Total Slurry (tph)	=B81/2000	=C81/2000
83	Total Slurry (gpm)	=C11	=C81/(8.34*60*C73)
84			
85		=B79/B81	
86			
87			
88			
89			
90			
91			
92			
93	Date	=C3	
94	Test No.	=C4	
95			
96			
97			
98	STREAM No.	305	306
99		WASTEWATER	THICKENER

Appendix F Material Balance Spreadsheet

	A	B	C
100		TREATMENT	OVERFLOW
101		FEED	TO ABSORBER
102			
103	TEMPERATUE (F)	na	na
104	SOLIDS CONTENT (%)	=C27	=G72
105	DENSITY (SGU)	=C26	=G73
106			
107	FLOW RATE		
108	CaCO3 (lbs/hr)	=B115/G83*G76	=G76-B108
109	CaSO4.2H2O (lbs/hr)	=B115/G83*G77	=G77-B109
110	Inerts (lbs/hr)	=B115/G83*G78	=G78-B110
111	Solids (lbs/hr)	=C34*8.34*60*B105*0.01*B1	=G79-B111
112	Water (lbs/hr)	=C34*8.34*60*B105*(1-0.01*	=G80-B112
113	Total Slurry (lbs/hr)	=C34*8.34*60*B105	=G81-B113
114	Total Slurry (tph)	=B113/2000	=G82-B114
115	Total Slurry (gpm)	=C34	=G83-B115
116			
117			
118			
119			
120			
121			
122			

Appendix F Material Balance Spreadsheet

	D	E	F
1			
2			
3		10/21/94	34629
4			
5		159.600806929182	163.077108974359
6		348.077040750916	13.7497371794872
7		308.596662164225	308.141532051282
8		128.043891712454	127.366134615385
9	=1.66*10^-7*9780*C9*20.9/(20.9	1854.49031242369	1827.08712820513
10	=1.66*10^-7*9780*C10*20.9/(20.	20.0272078754579	19.0035
11		136800	136800
12		1712	1617
13		33.3	39
14		1670.3	1641
15		1.174	1.173
16		24.77	26.7
17		268.804069215507	258.478038461538
18		173.5	211
19		11	12
20		165	197
21		1.022	1.025
22		5.83	3.21
23		62	57
24		0.3	0.3
25		34	36
26		1.011	1.01
27		0.007	0.011
28		145	1126
29		10	27
30		136	896
31		1.025	1.106
32		2.44	16.8
33		=$C$17*(0.01*$C$32-0.01*$C$22)/(0.01*$C$32-0.	=$C$17*(0.01*$C$32-0.01*$C$22)/(0.01*$C$32-0.01*

	D	E	F
34		110.927086996337	118.446897435897
35		97.5	97.5
36		6.4	6.6
37		8500	8800
38			
39			
40			
41	=D9		
42	=D10		
43			
44			
45			
46			
47			
48			
49			
50			
51			
52			
53			
54			
55	MATERIAL BALANCE		
56			
57			
58			
59			
60			
61			
62			
63			
64			
65			
66			

	D	E	F
67	301	302	303
68	CENTRFUGE	GYPSUM	THICKENER
69	FEED	CAKE	FEED
70			
71	=C8	Amb	=C8
72	=D79/D81*100	=C36	=C22
73	1.13	na	=C21
74			
75			
76	=C76+D108	=D76-F76	=C17*C19*3.785*2.205*100.09*60/10^6
77	=C77+D109	=D77-F77	=C17*C20*3.785*2.205*172.17*60/10^6
78	=C78+D110	=D78-F78	=C17*8.34*60*F73*F72/100-(F76+F77)
79	=C79+D111	=D79-F79	=C17*8.34*60*C21*C22/100
80	=C80+D112	=E79/(1-C36*0.01)-E79	=C17*8.34*60*C21*(1-0.01*C22)
81	=C81+D113	=E79+E80	=C17*8.34*60*C21
82	=D81/2000	=E81/2000	=F81/2000
83	=D81/D73/60/8.34	na	=C17
84			
85			
86			
87			
88			
89			
90			
91			
92			
93			
94			
95			
96			
97			
98	307	501	
99	THICKENER	LIMESTONE	

Appendix F Material Balance Spreadsheet

	D	E	F
100	UNDERFLOW	FEED RATE	
101			
102			
103	na	Amb	
104	=C32	100	
105	=C31	na	
106			
107			
108	=F76-G76	=C42*C43*100.09	
109	=F77-G77	0	
110	=F78-G78	=E108*(100/C35-1)	
111	=F79-G79	=SUM(E108:E110)	
112	=F80-G80	na	
113	=F81-G81	na	
114	=D113/2000	=E111/2000	
115	=F83-G83	na	
116			
117			
118			
119			
120			
121			
122			

Appendix F Material Balance Spreadsheet

	G
1	
2	
3	average
4	
5	124.049334722513
6	256.49229197778
7	330.313671115422
8	131.105783036302
9	1876.68032015343
10	72.0016846475296
11	188312.903225806
12	1801.60376344086
13	51.716935483871
14	1706.89704301075
15	1.1857688172043
16	25.8924193548387
17	479.639448203908
18	190.145161290323
19	19.0775
20	163.277
21	1.02432338709677
22	3.2062688172043
23	86.41
24	0.3
25	37.2354166666667
26	1.00974408602151
27	0.0075744623655914
28	738.226451612903
29	83.906
30	612.664
31	1.09152150537634
32	12.4741397849462
33	

	G
34	109.863806755991
35	97.5
36	6.22935483870968
37	10122.1612903226
38	
39	
40	
41	
42	
43	
44	
45	
46	
47	
48	
49	
50	
51	
52	
53	
54	
55	
56	
57	
58	
59	
60	
61	
62	
63	
64	
65	
66	

	G
67	304
68	THICKENER
69	OVERFLOW
70	
71	na
72	=C27
73	=C26
74	
75	
76	=H79*C24*(3.785*2.205*60/1000000)*1
77	=H79*(C25*0.1)*(3.785*2.205*60/10000
78	=G79-(G76+G77)
79	=((1-0.01*C22)/(0.01*C22)-(1-0.01*C32
80	=H79*(1-0.01*C27)/(0.01*C27)
81	=SUM(G79:G80)
82	=G81/2000
83	=G81/(8.34*60*G73)
84	
85	
86	
87	
88	
89	
90	
91	
92	
93	
94	
95	
96	
97	
98	
99	

	G
100	
101	
102	
103	
104	
105	
106	
107	
108	
109	
110	
111	
112	
113	
114	
115	
116	
117	
118	
119	
120	
121	
122	

APPENDIX G
DATA SUMMARY FOR MAJOR PROCESS VARIABLES

Appendix G - Data Summary For Major Process Variables

DATE	TOTAL MW	% SO2 REMOVAL	FLUE GAS INLET FGD	SO2 INLET FGD	LIMESTONE FEED TO ABS	LIMESTONE FEED TO ABS	SO2 OUTLET	ABS. MAKEUP WATER FLOW	SLURRY DEN.	SLURRY pH A
	MW	%	F	ppm	tons/hr	tons/hr	ppm	gpm	GM/ML	ph
			TR-111	AIT-109	SIC-425A	SIC-425B	AR-126	FIC-127	AIC-134	AIC-138A
06/06/92	434		721.2		0.01		21	21	1.15	6.01
06/08/92	417		842.9		0.02		18	18	1.11	5.95
06/09/92	435		956.5		0.78		18	18	1.14	5.91
06/13/92	177	99.2%	291.3	1816	1.01	4.86	15	7	1.56	5.52
06/14/92	175	99.1%	303.6	1909	0.84	4.66	18	8	1.11	5.89
06/15/92	294	98.6%	296.9	1753	8.80	0.75	24	202	1.12	6.03
06/16/92	425	98.0%	330.8	1732	1.09	6.90	34	95	1.13	5.62
06/17/92	510	94.1%	353.1	1496	1.48	11.37	88	334	1.20	5.43
06/18/92	500	94.6%	338.7	1831	3.93	6.13	98	346	1.13	5.60
06/19/92	507	93.3%	336.9	2219	6.07	4.97	148	493	1.14	5.55
06/20/92	370	92.2%	314.0	1828	5.41	7.02	142	147	1.161	6.276
06/22/92	435	94.8%	335.8	2185	4.64	6.76	113	249	1.139	5.545
06/23/92	462	94.5%	336.1	2158	0.26	12.67	119	351	1.138	5.528
06/24/92	470	93.9%	336.5	2265	11.48	0.33	137	301	1.155	5.624
06/25/92	494	92.6%	337.2	2208	11.68	0.94	164	338	1.172	5.695
06/26/92	453	94.8%	336.6	2197	1.36	9.76	114	216	1.160	5.949
06/27/92	482	95.1%	335.4	2265	5.26	6.18	111	301	1.144	6.126
06/28/92	453	95.4%	336.9	2255	10.20	1.95	104	266	1.141	5.718
06/30/92	500	94.6%	336.4	1932	2.97	11.57	104	336	1.14	5.64
07/01/92	439	96.1%	338.4	2054	12.02	0.46	80	249	1.14	5.70
07/02/92	437	96.7%	337.7	2017	0.03	12.89	67	221	1.14	5.69
07/05/92	120	99.8%	294.8	1818	3.14	3.15	4	165	1.12	6.00
07/06/92	141	99.6%	294.3	1727	4.94	2.48	7	60	1.13	5.70
07/07/92	167	98.3%	304.1	2011	1.38	6.32	34	35	1.14	5.67
07/08/92	175	98.8%	302.8	1864	4.95	2.58	22	61	1.14	5.69
07/09/92	343	94.6%	307.3	2020	2.10	8.64	109	197	1.14	5.50
07/10/92	505	91.6%	344.8	2039	4.37	8.56	172	393	1.15	5.45
07/11/92	493	92.5%	344.8	2211	0.03	14.79	165	274	1.14	5.48
07/12/92	469	93.4%	343.3	2091	13.67	0.51	137	321	1.14	5.48
07/13/92	488	93.1%	343.6	2259	4.93	10.44	155	315	1.14	5.50
07/14/92	476	93.4%	342.4	2133	7.28	5.71	142	356	1.14	5.52
07/15/92	493	94.2%	342.8	2183	6.45	7.77	126	319	1.15	5.52
07/16/92	502	93.3%	342.9	2244	0.03	14.80	150	310	1.15	5.51

Appendix G - Data Summary For Major Process Variables

DATE	SLURRY pH B	SLURRY CARBONATE	TOTAL WATER TO FACILITY	AIR TO FAS	AIR TO ARS	TOTAL FGD DP	Number of Ciculation Pumps Running
	ph	mmole/l	gpm	scfm	scfm	Inches Water Column	
	AIC-138B	AIT-135	FI-264	FIC-344	FIC-345	PDI-115-01	
06/06/92	5.74	42.79	802	8689	7222	4.56	7
06/08/92	5.86	52.70	651	8000	7002	3.92	7
06/09/92	5.93	64.14	807	7999	7001	4.16	7
06/13/92	8.60	14.05	809	7369	6169	2.08	12
06/14/92	5.79	10.68	406	7998	7001	1.04	11
06/15/92	6.00	49.90	638	8000	6998	3.14	11
06/16/92	5.73	79.28	617	8003	7000	4.94	11
06/17/92	7.00	75.77	801	7888	6902	6.99	12
06/18/92	5.83	106.80	775	8106	7002	6.47	11
06/19/92	5.75	87.33	694	8058	7091	6.55	11
06/20/92	6.262	52.44	1201	6997	7995	3.70	10
06/22/92	5.710	59.35	407	5208	7558	5.59	11
06/23/92	5.459	59.91	845	5680	7324	5.70	10
06/24/92	5.504	54.44	781	6889	7264	6.01	11
06/25/92	5.450	37.32	845	8041	7067	6.47	11
06/26/92	5.580	41.76	753	7998	6998	5.42	11
06/27/92	5.562	47.56	834	8000	7000	5.94	11
06/28/92	5.814	50.57	792	8001	7094	5.51	11
06/30/92	5.75	39.35	884	7999	7193	6.43	11
07/01/92	5.82	41.01	754	7997	7004	5.14	11
07/02/92	5.79	37.70	752	7999	7001	5.20	11
07/05/92	6.12	38.07	424	8002	6998	0.67	11
07/06/92	5.72	38.92	428	7948	7351	0.87	11
07/07/92	5.66	37.78	428	8060	7411	1.08	11
07/08/92	5.67	33.87	430	8000	7501	1.27	11
07/09/92	5.49	36.48	612	7999	7301	4.28	11
07/10/92	5.43	33.92	865	8000	6999	6.73	11
07/11/92	5.45	39.52	724	7996	7002	6.40	11
07/12/92	5.47	34.84	773	7999	7002	6.02	11
07/13/92	5.51	46.25	777	8001	7000	6.48	11
07/14/92	5.52	48.04	907	8002	6999	6.11	11
07/15/92	5.51	49.06	1012	8002	7000	6.35	11
07/16/92	5.51	51.10	802	8000	7030	6.38	11

Appendix G - Data Summary For Major Process Variables

DATE	TOTAL MW	% SO2 REMOVAL	FLUE GAS INLET FGD	SO2 INLET FGD	LIMESTONE FEED TO ABS	LIMESTONE FEED TO ABS	SO2 OUTLET	ABS. MAKEUP WATER FLOW	SLURRY DEN.	SLURRY pH A
	MW	%	F	ppm	tons/hr	tons/hr	ppm	gpm	GM/ML	ph
			TR-111	AIT-109	SIC-425A	SIC-425B	AR-126	FIC-127	AIC-134	AIC-138A
07/17/92	486	92.6%	340.0	2225	5.67	6.86	165	274	1.15	5.55
08/01/92	429	93.2%	334.3	2265	0.11	14.06	155	161	1.13	5.71
08/02/92	413	93.8%	335.3	2244	13.61	0.31	139	264	1.14	5.75
08/03/92	459	95.8%	334.7	2246	11.15	4.68	95	180	1.14	5.78
08/11/92	466	95.1%	344.0	2140	0.03	11.55	105	302	1.15	5.80
08/13/92	521	95.3%	343.4	2307	14.69	0.86	108	359	1.14	5.76
08/14/92	469	96.1%	342.7	2233	3.36	11.71	86	280	1.14	5.78
08/17/92	449	96.3%	345.0	2373	11.06	2.32	87	298	1.18	5.83
08/18/92	461	92.5%	343.0	2283	0.03	14.31	171	325	1.19	5.77
08/19/92	199	98.6%	290.2	1999	1.95	3.74	28	98	1.18	6.02
08/20/92	157	100.1%	270.6	1056	2.63	0.31	-2	23	1.17	6.36
08/21/92	155	99.7%	297.5	2066	5.20	0.31	7	69	1.18	6.11
08/22/92	151	99.9%	299.3	1946	4.15	0.31	2	31	1.18	6.17
08/23/92	156	99.7%	299.7	1928	1.31	3.54	7	45	1.18	6.10
08/24/92	174	98.9%	302.5	2149	0.02	5.93	24	64	1.18	6.08
08/25/92	176	99.2%	302.6	2142	0.02	6.50	18	43	1.18	6.01
08/26/92	236	99.4%	299.2	2024	0.08	7.76	13	17	1.19	6.08
08/27/92	472	94.5%	318.2	2266	13.58	1.09	126	274	1.19	6.19
08/28/92	485	94.1%	320.6	2288	2.81	7.98	135	326	1.19	6.09
08/29/92	435	94.2%	320.7	2238	11.04	1.79	129	253	1.19	6.04
08/30/92	331	97.6%	307.8	2076	8.84	0.31	50	158	1.19	6.18
08/31/92	419	94.5%	313.9	2177	4.75	7.35	120	351	1.19	6.11
09/01/92	479	94.5%	320.9	2275	3.33	10.51	126	468	1.19	6.10
09/02/92	496	92.5%	320.1	2205	13.41	0.31	166	470	1.18	6.12
09/03/92	509	91.8%	322.1	2277	8.16	6.08	187	248	1.19	6.11
09/04/92	498	90.3%	322.2	2307	0.03	12.36	223	241	1.17	6.12
09/05/92	479	91.3%	324.0	2264	0.02	13.64	196	362	1.18	6.12
09/06/92	470	92.7%	325.1	2321	12.27	2.10	170	343	1.17	6.12
09/07/92	459	94.8%	322.1	2294	12.09	2.25	119	256	1.16	6.14
09/08/92	497	96.6%	323.6	2067	1.74	8.14	71	276	1.17	6.19
09/09/92	512	93.7%	320.6	2206	0.82	8.83	138	320	1.18	6.08
09/10/92	501	95.0%	321.8	2268	2.70	7.82	114	275	1.18	6.21
09/11/92	508	95.5%	323.5	2273	8.14	0.31	102	336	1.17	6.25

Appendix G - Data Summary For Major Process Variables

DATE	SLURRY pH B	SLURRY CARBONATE	TOTAL WATER TO FACILITY	AIR TO FAS	AIR TO ARS	TOTAL FGD DP	Number of Ciculation Pumps Running
	ph	mmole/l	gpm	scfm	scfm	Inches Water Column	
	AIC-138B	AIT-135	FI-264	FIC-344	FIC-345	PDI-115-01	
07/17/92	5.57	69.37	833	9144	8164	5.51	11
08/01/92	6.00	58.37	344	8002	6999	4.76	11
08/02/92	5.99	58.50	593	8001	7001	4.72	11
08/03/92	5.94	78.05	814	8001	6999	6.02	11
08/11/92	5.77	45.40	931	8003	6998	6.64	11
08/13/92	5.63	48.86	1593	8001	6998	7.37	0
08/14/92	5.82	56.12	1527	7999	7000	6.10	11
08/17/92	5.80	67.69	1505	8007	7000	5.60	11
08/18/92	5.72	48.26	1500	7996	6999	5.91	11
08/19/92	5.97	55.13	1222	8000	6999	1.72	11
08/20/92	6.29	54.99	1258	8006	7000	0.65	11
08/21/92	6.19	44.88	1321	7269	6581	0.55	11
08/22/92	6.35	44.47	1290	5613	5611	0.54	11
08/23/92	6.35	28.68	1258	5613	5611	0.52	11
08/24/92	6.35	27.12	1308	3996	5841	0.51	11
08/25/92	6.35	26.26	1217	186	4903	0.70	11
08/26/92	6.79	46.56	1216	949	3303	1.31	10
08/27/92	6.28	118.99	1611	7000	7000	6.57	10
08/28/92	6.00	100.68	1804	7982	7002	6.71	10
08/29/92	5.94	57.03	1777	7998	7001	5.64	10
08/30/92	6.09	67.69	1595	7771	7000	2.61	10
08/31/92	6.03	74.15	1744	7000	7001	5.13	10
09/01/92	6.02	73.50	1808	7002	7001	5.99	10
09/02/92	6.05	77.04	1859	7290	7000	7.14	10
09/03/92	6.04	74.72	1837	7659	6998	7.40	10
09/04/92	6.07	74.77	1819	7001	6998	6.41	10
09/05/92	6.08	66.40	1854	7843	7005	6.25	9
09/06/92	6.09	65.15	1841	8000	7004	6.51	9
09/07/92	6.10	69.12	1772	7072	6455	3.44	9
09/08/92	6.14	67.15	1696	4998	5002	1.43	11
09/09/92	6.04	33.93	1670	4999	4999	1.78	11
09/10/92	6.17	55.59	1622	5001	5000	1.51	11
09/11/92	6.21	70.86	1678	5000	5000	1.80	11

Appendix G - Data Summary For Major Process Variables

DATE	TOTAL MW	% SO2 REMOVAL	FLUE GAS INLET FGD	SO2 INLET FGD	LIMESTONE FEED TO ABS	LIMESTONE FEED TO ABS	SO2 OUTLET	ABS. MAKEUP WATER FLOW	SLURRY DEN.	SLURRY pH A
	MW	%	F	ppm	tons/hr	tons/hr	ppm	gpm	GM/ML	ph
			TR-111	AIT-109	SIC-425A	SIC-425B	AR-126	FIC-127	AIC-134	AIC-138A
09/12/92	475	93.9%	325.0	2413	9.19	0.71	146	344	1.18	6.18
09/26/92	151	99.6%	292.5	1952	0.02	5.33	8	0	1.18	6.01
09/27/92	155	99.5%	290.9	2023	4.89	0.49	10	11	1.18	6.01
09/28/92	343	94.9%	294.5	2020	11.84	0.31	104	196	1.18	5.91
10/01/92	456	95.7%	326.5	2148	6.51	8.66	91	319	1.20	6.00
10/02/92	490	94.4%	328.5	2143	13.91	0.31	120	305	1.20	5.96
10/03/92	446	94.2%	326.5	2107	4.47	11.73	123	259	1.18	5.97
10/04/92	458	92.6%	328.1	2215	4.66	13.86	164	310	1.17	5.92
10/05/92	449	92.9%	328.2	2165	0.95	12.68	153	312	1.17	5.96
10/06/92	393	94.6%	320.9	2179	11.67	0.31	118	217	1.17	5.69
10/07/92	172	99.4%	291.7	2103	4.90	0.54	12	67	1.17	5.75
10/08/92	173	99.4%	292.7	2141	0.03	5.52	12	0	1.17	5.99
10/09/92	172	99.6%	293.3	2211	0.03	6.06	9	16	1.17	5.92
10/10/92	155	99.6%	292.4	2164	0.03	5.41	9	0	1.17	5.94
10/11/92	152	100.1%	295.9	2125	3.25	2.10	-1	0	1.17	5.94
10/12/92	173	98.9%	278.6	2021	4.52	0.51	21	20	1.18	5.92
10/13/92	174	99.0%	296.6	2061	4.66	1.91	20	20	1.18	5.94
10/14/92	396	93.7%	298.2	2084	12.60	1.23	130	250	1.18	5.80
10/15/92	502	92.6%	312.2	2147	0.03	15.21	160	309	1.17	5.76
10/16/92	504	92.2%	306.3	2154	13.20	1.74	168	266	1.17	5.78
10/17/92	483	92.1%	310.2	2296	14.99	2.08	181	255	1.17	5.76
10/18/92	460	93.7%	308.4	2304	0.04	14.62	146	256	1.17	5.75
10/19/92	478	93.0%	310.5	2156	13.08	2.85	150	267	1.17	5.60
10/20/92	486	93.1%	311.2	2178	2.15	14.99	151	271	1.17	5.60
10/21/92	497	92.6%	310.2	2246	11.43	4.56	167	240	1.17	5.54
10/22/92	499	92.3%	315.6	2133	15.49	1.17	165	281	1.17	5.51
10/23/92	495	91.8%	316.6	2078	0.03	15.14	171	227	1.17	5.62
10/24/92	471	92.7%	313.6	2125	11.55	5.00	155	280	1.17	5.66
10/25/92	483	93.5%	314.3	2084	9.31	11.28	136	327	1.17	5.68
10/26/92	495	91.8%	313.6	2161	6.93	9.52	176	294	1.18	5.71
10/27/92	494	91.4%	314.3	2164	7.41	10.44	187	224	1.17	5.70
10/28/92	497	91.3%	314.7	2173	0.04	15.75	189	270	1.16	5.71
10/29/92	361	94.5%	306.0	2035	9.78	2.13	111	152	1.16	5.75

Appendix G - Data Summary For Major Process Variables

DATE	SLURRY pH B	SLURRY CARBONATE	TOTAL WATER TO FACILITY	AIR TO FAS	AIR TO ARS	TOTAL FGD DP	Number of Ciculation Pumps Running
	ph	mmole/l	gpm	scfm	scfm	Inches Water Column	
	AIC-138B	AIT-135	FI-264	FIC-344	FIC-345	PDI-115-01	
09/12/92	6.14	41.18	1651	5012	5006	1.50	11
09/26/92	5.93	43.34	1257	7009	7996	0.62	11
09/27/92	5.95	42.55	1225	7013	7994	0.72	11
09/28/92	5.83	52.95	1445	6828	7978	4.42	11
10/01/92	5.93	130.47	1586	8008	7949	6.80	10
10/02/92	5.90	58.91	1660	8735	8738	7.75	10
10/03/92	5.94	53.56	1551	9001	9000	6.76	10
10/04/92	5.87	44.77	1589	8980	8978	6.41	10
10/05/92	5.91	50.11	1543	6994	8005	6.35	10
10/06/92	5.76	52.87	1461	7807	7185	5.10	10
10/07/92	5.58	37.58	1195	7868	6999	0.79	9
10/08/92	5.82	34.60	1108	7633	6998	0.84	9
10/09/92	5.98	32.52	1142	8006	6994	0.84	9
10/10/92	6.09	38.13	1165	8002	7003	0.67	9
10/11/92	6.13	36.44	1161	7988	7001	0.64	9
10/12/92	6.14	36.96	1213	7891	6995	1.42	9
10/13/92	6.16	37.27	1233	8004	6996	1.05	9
10/14/92	6.06	47.75	1586	7987	6999	5.74	9
10/15/92	6.08	49.95	1685	7999	7002	7.88	9
10/16/92	6.12	59.71	1690	7875	6999	7.44	9
10/17/92	6.10	53.08	1635	7661	7001	6.86	9
10/18/92	6.04	57.14	1490	8003	7008	6.24	10
10/19/92	5.58	44.93	1442	8003	7001	6.89	10
10/20/92	5.47	49.58	1479	8000	6996	7.17	10
10/21/92	5.47	45.00	1484	8001	6998	7.39	10
10/22/92	5.46	31.26	1496	7997	7000	7.24	10
10/23/92	5.58	53.00	1502	8001	7001	6.84	10
10/24/92	5.65	60.36	1467	8009	6999	6.51	10
10/25/92	5.72	58.41	1503	8006	7003	6.55	10
10/26/92	5.76	83.08	1525	8006	7001	7.06	10
10/27/92	5.75	66.96	1464	8008	7000	6.50	10
10/28/92	5.77	70.63	1495	8003	7001	6.46	10
10/29/92	5.81	62.73	1328	8001	7000	3.88	10

Appendix G - Data Summary For Major Process Variables

DATE	TOTAL MW	% SO2 REMOVAL	FLUE GAS INLET FGD	SO2 INLET FGD	LIMESTONE FEED TO ABS	LIMESTONE FEED TO ABS	SO2 OUTLET	ABS. MAKEUP WATER FLOW	SLURRY DEN.	SLURRY pH A
	MW	%	F	ppm	tons/hr	tons/hr	ppm	gpm	GM/ML	ph
			TR-111	AIT-109	SIC-425A	SIC-425B	AR-126	FIC-127	AIC-134	AIC-138A
10/30/92	382	93.8%	311.7	2053	9.93	0.31	127	150	1.15	5.76
10/31/92	339	93.7%	315.8	2087	9.25	0.31	131	531	1.14	5.60
11/06/92	305	95.3%	317.6	1672	0.05	9.28	79	114	1.18	6.05
11/07/92	304	94.6%	318.7	2088	4.84	4.85	113	0	1.16	6.02
11/08/92	306	94.6%	318.2	2074	10.65	0.31	112	40	1.15	6.02
11/09/92	300	94.9%	318.9	2141	4.59	4.05	109	48	1.17	6.27
11/10/92	311	95.6%	320.3	2155	0.04	9.00	95	48	1.17	6.26
11/13/92	306	95.0%	314.2	2077	6.82	2.57	103	81	1.14	6.21
11/14/92	305	97.3%	315.6	2069	2.86	5.23	56	119	1.14	5.80
11/15/92	297	96.3%	316.9	2082	0.05	8.07	76	87	1.15	5.87
11/16/92	308	96.8%	320.2	2083	4.98	4.58	66	143	1.14	5.75
11/17/92	307	95.5%	321.6	2133	9.10	1.00	96	98	1.15	5.80
11/18/92	300	93.8%	320.4	2140	0.04	9.85	133	94	1.15	5.85
11/19/92	308	93.3%	320.0	2115	3.16	6.69	142	122	1.14	5.85
11/20/92	299	93.4%	320.1	2071	9.27	0.31	136	134	1.14	5.84
11/21/92	290	93.6%	319.4	2041	3.14	6.12	130	109	1.15	5.82
11/22/92	296	93.5%	317.6	2048	1.25	8.02	134	126	1.14	5.82
11/23/92	295	93.8%	318.2	2068	5.99	3.47	129	166	1.14	5.76
11/24/92	303	93.3%	322.0	2091	2.23	7.90	140	63	1.16	5.94
11/25/92	218	93.2%	286.9	1401	6.11	0.99	95	121	1.16	6.30
12/05/92	108	99.5%	264.7	1625	1.28	3.30	8	0	1.15	6.33
12/06/92	149	99.6%	289.0	2139	5.19	0.32	8	31	1.14	6.18
12/07/92	171	99.5%	293.5	2221	6.34	0.32	11	1	1.15	6.17
12/08/92	155	99.6%	296.0	2112	4.76	0.34	8	2	1.14	6.20
12/09/92	167	99.5%	294.9	2102	5.69	0.31	10	4	1.15	6.15
12/10/92	173	99.2%	296.5	2103	5.94	0.31	17	22	1.14	6.21
12/11/92	168	99.2%	301.4	2135	3.02	3.05	18	25	1.14	6.27
12/12/92	155	99.3%	295.6	2113	0.04	4.93	15	12	1.15	6.25
12/13/92	152	98.5%	295.0	2117	0.04	3.84	32	33	1.14	4.88
12/14/92	140	99.5%	289.2	2050	1.43	4.33	11	0	1.14	6.33
12/15/92	157	99.4%	296.2	2051	0.04	5.64	13	6	1.15	5.80
12/16/92	160	99.4%	293.6	2103	0.04	5.17	12	0	1.14	5.96
12/17/92	151	99.5%	290.5	2096	0.04	4.80	11	6	1.14	5.80
12/18/92	173	99.0%	298.7	2127	0.04	5.31	22	41	1.15	5.54
12/19/92	160	99.2%	295.6	2072	4.22	1.48	17	47	1.14	5.48

Appendix G - Data Summary For Major Process Variables

DATE	SLURRY pH B	SLURRY CARBONATE	TOTAL WATER TO FACILITY	AIR TO FAS	AIR TO ARS	TOTAL FGD DP	Number of Ciculation Pumps Running
	ph	mmole/l	gpm	scfm	scfm	Inches Water Column	
	AIC-138B	AIT-135	FI-264	FIC-344	FIC-345	PDI-115-01	
10/30/92	5.84	44.30	1327	8002	7004	3.67	10
10/31/92	5.67	26.52	1737	7971	7061	-0.10	10
11/06/92	5.91	46.24	744	6997	7977	2.44	10
11/07/92	6.11	42.87	766	6998	8004	2.49	10
11/08/92	6.33	41.78	772	6998	7999	2.47	10
11/09/92	6.27	36.41	781	6775	7674	2.45	10
11/10/92	6.08	33.68	837	4999	5002	2.63	10
11/13/92	6.03	27.71	860	5016	5591	2.30	10
11/14/92	5.80	34.11	906	5004	6004	2.35	10
11/15/92	5.74	39.46	883	4959	5523	2.30	10
11/16/92	5.63	28.04	946	4996	6004	2.41	10
11/17/92	5.66	41.41	900	5002	5995	2.44	10
11/18/92	5.72	41.74	900	5001	6006	2.31	10
11/19/92	5.73	38.97	919	5007	6005	2.41	10
11/20/92	5.77	34.25	868	4533	6108	2.31	10
11/21/92	5.72	32.03	840	4430	6002	2.25	10
11/22/92	5.71	30.24	888	4437	6003	2.31	10
11/23/92	5.66	28.65	893	4351	5931	2.30	10
11/24/92	5.88	36.19	759	4405	6025	2.37	10
11/25/92	6.29	49.31	804	4239	5290	2.11	10
12/05/92	6.27	39.06	571	8092	8118	0.29	10
12/06/92	6.11	40.27	636	8086	8120	0.53	10
12/07/92	6.11	42.17	579	7692	8111	0.73	10
12/08/92	6.21	43.71	588	7002	8112	0.62	10
12/09/92	6.08	35.38	667	7007	8104	0.69	10
12/10/92	6.31	30.25	598	7001	8109	0.77	10
12/11/92	6.83	31.91	636	7003	8111	0.71	10
12/12/92	6.22	30.73	631	7432	8113	0.57	10
12/13/92	6.32	22.16	650	8488	8894	0.54	10
12/14/92	5.94	29.18	596	8008	8001	0.43	10
12/15/92	6.01	31.47	590	7994	8002	0.59	10
12/16/92	5.99	37.02	546	8003	7997	0.64	10
12/17/92	5.99	43.46	625	7996	8002	0.55	10
12/18/92	5.86	25.08	687	8000	8004	0.76	10
12/19/92	5.85	26.11	718	8003	7997	0.63	10

Appendix G - Data Summary For Major Process Variables

DATE	TOTAL MW	% SO2 REMOVAL	FLUE GAS INLET FGD	SO2 INLET FGD	LIMESTONE FEED TO ABS	LIMESTONE FEED TO ABS	SO2 OUTLET	ABS. MAKEUP WATER FLOW	SLURRY DEN.	SLURRY pH A
	MW	%	F	ppm	tons/hr	tons/hr	ppm	gpm	GM/ML	ph
			TR-111	AIT-109	SIC-425A	SIC-425B	AR-126	FIC-127	AIC-134	AIC-138A
12/20/92	171	99.1%	297.0	2102	5.41	0.68	18	1	1.15	5.59
12/21/92	250	96.1%	271.6	1938	2.64	6.61	75	122	1.15	5.58
12/22/92	221	97.5%	280.7	1829	0.32	6.92	46	97	1.16	5.55
12/23/92	381	97.0%	289.8	2051	12.37	0.31	61	218	1.16	5.45
12/24/92	289	97.1%	303.5	2070	8.51	0.32	60	100	1.15	5.30
12/25/92	229	98.1%	287.1	1907	2.21	5.10	37	64	1.15	5.52
12/26/92	162	99.6%	292.0	2016	0.04	5.48	8	18	1.15	5.61
12/27/92	220	97.8%	270.0	1896	0.04	7.03	41	75	1.15	5.66
12/28/92	366	95.0%	305.5	1943	0.04	11.09	98	204	1.16	5.87
12/29/92	450	93.2%	315.0	2040	12.36	3.74	140	234	1.16	5.97
12/30/92	121	99.7%	282.3	2084	3.35	0.56	7	0	1.15	6.19
12/31/92	132	99.7%	290.8	2131	3.37	1.11	7	5	1.15	6.18
01/02/93	390	92.3%	310.2	1908	4.00	8.52	148	183	1.16	5.94
01/03/93	410	91.0%	312.0	1856	0.04	14.17	167	217	1.16	6.00
01/04/93	396	92.8%	309.6	1745	5.27	7.14	126	192	1.16	6.11
01/05/93	218	97.0%	272.3	1361	0.06	6.51	41	59	1.16	6.25
01/06/93	438	93.8%	311.7	1692	4.51	9.79	105	223	1.16	6.17
01/07/93	496	93.0%	314.3	2064	7.28	10.27	144	287	1.16	6.04
01/08/93	495	95.1%	312.8	2088	15.29	0.95	102	216	1.17	6.02
01/09/93	496	97.1%	311.6	2110	10.10	5.69	61	281	1.17	5.95
01/10/93	494	93.5%	309.2	1981	15.82	1.30	129	243	1.82	6.03
01/11/93	486	94.8%	310.6	2033	6.22	11.16	106	298	1.19	6.07
01/12/93	486	94.9%	308.1	2086	9.11	11.96	106	233	1.19	6.21
01/13/93	414	94.0%	314.1	2143	3.57	12.56	129	248	1.18	6.02
01/14/93	432	92.8%	314.1	2207	0.71	16.14	159	307	1.17	5.75
01/15/93	417	93.9%	314.0	2115	5.85	11.67	129	287	1.16	5.76
01/16/93	436	93.8%	312.5	2155	7.82	6.70	133	290	1.16	5.77
01/17/93	439	93.1%	314.3	2189	14.88	0.40	152	298	1.17	5.72
01/18/93	446	94.0%	314.7	2183	0.68	14.53	132	175	1.17	5.81
01/20/93	423	94.5%	313.3	2204	14.04	#N/A	122	267	1.17	5.94
01/21/93	436	93.3%	313.9	2186	0.04	15.00	147	310	1.17	5.95
01/22/93	417	94.1%	316.7	2128	0.04	12.35	126	278	1.17	5.98
01/23/93	391	94.4%	315.6	2068	6.49	6.36	116	288	1.17	6.01
01/24/93	383	95.1%	312.6	2159	13.39	0.31	106	264	1.17	6.04
01/25/93	410	94.5%	312.3	2153	10.40	3.63	119	247	1.17	6.01

Appendix G - Data Summary For Major Process Variables

DATE	SLURRY pH B	SLURRY CARBONATE	TOTAL WATER TO FACILITY	AIR TO FAS	AIR TO ARS	TOTAL FGD DP	Number of Ciculation Pumps Running
	ph	mmole/l	gpm	scfm	scfm	Inches Water Column	
	AIC-138B	AIT-135	FI-264	FIC-344	FIC-345	PDI-115-01	
12/20/92	5.96	28.13	702	7996	7997	0.75	10
12/21/92	5.97	67.59	829	7999	7997	2.64	10
12/22/92	5.94	52.52	842	8002	7997	2.44	10
12/23/92	5.87	61.02	970	7995	7998	4.23	10
12/24/92	5.71	35.82	822	7966	7942	3.04	10
12/25/92	5.93	42.17	766	7945	7923	1.02	10
12/26/92	6.02	47.26	672	7958	7918	0.73	10
12/27/92	5.89	41.79	796	7946	7921	2.23	10
12/28/92	5.80	37.75	940	7950	7929	3.68	10
12/29/92	5.91	54.20	1027	7947	7929	4.99	10
12/30/92	6.13	38.33	517	8109	8110	0.33	10
12/31/92	6.11	38.79	599	8102	8107	0.38	#REF!
01/02/93	5.89	37.29	961	7762	7925	4.10	7
01/03/93	5.96	39.37	1020	7008	8014	4.47	7
01/04/93	6.05	48.48	984	6997	8003	4.54	8
01/05/93	6.16	44.53	794	6998	8000	2.46	6
01/06/93	6.10	73.66	1021	7006	8002	4.88	7
01/07/93	5.99	62.73	1088	6989	8007	5.76	6
01/08/93	5.97	51.07	1011	7006	7997	5.45	6
01/09/93	5.89	39.50	1083	7002	7997	5.47	7
01/10/93	5.94	59.02	1093	7302	7826	6.30	7
01/11/93	6.03	73.49	1139	8000	8002	6.58	9
01/12/93	6.12	118.15	1095	7998	7998	6.40	10
01/13/93	6.01	55.82	1064	7999	8005	4.68	9
01/14/93	6.00	43.80	1086	7981	8010	4.71	8
01/15/93	6.07	53.85	1104	8011	7989	4.45	8
01/16/93	6.07	50.27	1077	7996	7995	4.67	8
01/17/93	6.03	37.45	1068	8004	8001	4.76	8
01/18/93	6.11	56.77	931	8006	7997	4.86	8
01/20/93	6.24	55.58	1009	7989	8002	4.44	8
01/21/93	6.34	50.60	1093	7998	7994	4.83	8
01/22/93	6.32	47.06	1061	8012	7997	4.59	8
01/23/93	6.30	45.82	1065	7991	8010	4.17	8
01/24/93	6.32	51.20	1035	7991	8003	3.94	8
01/25/93	6.28	47.08	1019	8004	8004	4.42	8

Appendix G - Data Summary For Major Process Variables

DATE	TOTAL MW	% SO2 REMOVAL	FLUE GAS INLET FGD	SO2 INLET FGD	LIMESTONE FEED TO ABS	LIMESTONE FEED TO ABS	SO2 OUTLET	ABS. MAKEUP WATER FLOW	SLURRY DEN.	SLURRY pH A
	MW	%	F	ppm	tons/hr	tons/hr	ppm	gpm	GM/ML	ph
			TR-111	AIT-109	SIC-425A	SIC-425B	AR-126	FIC-127	AIC-134	AIC-138A
01/26/93	420	94.4%	314.8	2130	0.05	13.81	120	246	1.17	6.05
01/27/93	413	94.4%	316.1	2083	1.00	13.50	116	266	1.17	6.09
01/28/93	288	95.5%	298.3	1899	0.51	8.87	86	150	1.17	6.14
01/29/93	285	95.8%	299.4	1913	0.24	9.17	81	162	1.17	6.12
01/30/93	281	95.9%	303.1	1844	0.04	8.94	75	67	1.16	6.15
01/31/93	277	95.3%	302.6	1874	7.15	1.96	88	158	1.16	6.13
02/01/93	277	95.3%	302.6	1874	7.15	1.96	88	158	1.16	6.13
02/02/93	231	96.5%	278.8	1775	0.24	7.88	62	123	1.17	6.23
02/03/93	231	96.5%	278.8	1775	0.24	7.88	62	123	1.17	6.23
02/04/93	278	94.6%	293.8	1939	9.28	0.31	105	130	1.17	6.12
02/05/93	279	95.0%	282.7	1927	9.47	0.31	96	164	1.16	6.12
02/06/93	282	95.8%	286.2	1945	0.05	9.66	83	133	1.17	6.17
02/07/93	261	96.1%	281.2	1847	0.37	8.52	72	150	1.17	6.24
02/08/93	278	95.6%	287.2	1938	6.23	3.17	85	146	1.17	6.05
02/09/93	281	94.1%	293.2	1947	0.04	9.22	115	127	1.17	6.18
02/10/93	280	94.8%	290.0	1950	6.31	2.85	102	37	1.16	6.24
02/11/93	266	95.0%	282.6	1907	9.36	0.31	95	64	1.17	6.20
02/12/93	280	94.4%	289.4	1977	8.49	1.22	111	140	1.16	6.18
02/13/93	281	93.8%	286.8	1988	7.58	2.59	123	119	1.17	6.18
02/14/93	284	93.0%	287.6	2031	0.23	9.64	142	166	1.17	6.17
02/15/93	273	94.5%	286.6	2039	1.28	8.25	111	141	1.17	6.26
02/16/93	356	95.8%	296.3	2081	0.15	13.06	88	173	1.18	6.28
02/17/93	370	97.0%	296.8	2464	0.04	13.67	75	192	1.18	6.32
02/18/93	423	96.3%	316.4	2628	14.53	1.83	98	218	1.17	6.29
02/19/93	435	94.6%	320.1	2638	0.73	14.26	141	282	1.18	6.15
02/20/93	422	95.6%	320.1	2549	9.36	7.07	113	246	1.18	6.16
02/21/93	412	94.8%	318.3	2205	13.11	0.31	114	269	1.17	6.28
02/22/93	424	95.1%	316.6	2160	6.05	5.42	106	225	1.17	6.35
02/23/93	435	93.5%	315.5	2215	0.05	12.04	144	213	1.17	6.33
02/24/93	433	94.0%	316.9	2222	6.14	5.78	133	303	1.17	6.31
02/25/93	431	95.6%	318.0	2205	11.57	0.81	96	293	1.16	6.37
02/26/93	250	97.8%	283.2	1686	1.93	7.89	37	152	1.16	6.97
03/01/93	151	99.1%	289.8	2019	0.04	5.22	18	39	1.15	6.75
03/02/93	171	99.4%	300.9	1918	0.04	5.70	11	18	1.17	5.73
03/03/93	167	99.2%	297.2	1907	4.99	0.31	15	7	1.16	5.30

Appendix G - Data Summary For Major Process Variables

DATE	SLURRY pH B	SLURRY CARBONATE	TOTAL WATER TO FACILITY	AIR TO FAS	AIR TO ARS	TOTAL FGD DP	Number of Ciculation Pumps Running
	ph	mmole/l	gpm	scfm	scfm	Inches Water Column	
	AIC-138B	AIT-135	FI-264	FIC-344	FIC-345	PDI-115-01	
01/26/93	6.30	51.31	1045	8009	7994	4.57	8
01/27/93	6.33	47.22	1055	7995	8000	4.47	8
01/28/93	6.36	53.20	883	8007	8001	2.35	6
01/29/93	6.35	48.56	891	7993	8002	2.35	6
01/30/93	6.36	49.90	837	7998	7999	2.31	6
01/31/93	6.33	41.01	921	8001	8003	2.20	6
02/01/93	6.33	41.01	921	8001	8003	2.20	6
02/02/93	6.42	53.02	834	8005	7997	1.96	6
02/03/93	6.42	53.02	834	8005	7997	1.96	6
02/04/93	6.30	39.05	844	7988	7994	2.33	6
02/05/93	6.30	33.14	916	8006	7997	2.25	6
02/06/93	6.33	46.49	834	8001	8002	2.28	6
02/07/93	6.41	37.60	846	8002	7998	2.05	6
02/08/93	6.20	23.35	869	8005	7993	2.19	6
02/09/93	6.33	31.50	882	8010	7996	2.30	6
02/10/93	6.40	30.92	810	7996	7998	2.27	6
02/11/93	6.49	27.73	823	8002	8000	2.06	6
02/12/93	6.49	30.70	893	8000	7998	2.27	6
02/13/93	6.49	26.30	847	8005	8001	2.30	6
02/14/93	6.49	23.44	875	8005	7994	2.35	6
02/15/93	6.49	29.31	833	8009	7992	2.16	6
02/16/93	6.49	34.65	924	8001	7432	3.80	8
02/17/93	6.49	65.49	956	8004	7001	4.46	9
02/18/93	6.49	73.46	1049	8005	7000	5.28	9
02/19/93	6.49	33.25	1104	8007	6999	5.67	10
02/20/93	6.49	35.55	1072	7999	6996	5.43	10
02/21/93	6.49	37.45	1077	7997	7003	4.73	8
02/22/93	6.49	39.67	1021	7998	6998	4.78	7
02/23/93	6.48	36.39	1061	7983	7012	4.59	6
02/24/93	6.48	14.68	1097	8001	7007	4.61	6
02/25/93	5.72	9.48	1055	8000	6997	4.67	7
02/26/93	6.07	12.90	893	7998	6999	2.40	6
03/01/93	5.85	15.47	592	8011	6994	0.57	6
03/02/93	6.10	46.39	650	7998	7001	1.17	6
03/03/93	5.87	47.45	614	8024	6999	1.08	6

Appendix G - Data Summary For Major Process Variables

DATE	TOTAL MW	% SO2 REMOVAL	FLUE GAS INLET FGD	SO2 INLET FGD	LIMESTONE FEED TO ABS	LIMESTONE FEED TO ABS	SO2 OUTLET	ABS. MAKEUP WATER FLOW	SLURRY DEN.	SLURRY pH A
	MW	%	F	ppm	tons/hr	tons/hr	ppm	gpm	GM/ML	ph
			TR-111	AIT-109	SIC-425A	SIC-425B	AR-126	FIC-127	AIC-134	AIC-138A
03/04/93	171	99.3%	294.4	1929	5.19	0.31	14	10	1.17	5.87
03/05/93	171	98.8%	291.8	2134	6.44	0.31	25	0	1.16	5.78
03/06/93	228	97.8%	274.2	2129	0.16	8.60	46	61	1.16	5.88
03/07/93	433	95.1%	299.9	2032	0.32	13.59	101	198	1.17	5.86
03/08/93	514	93.0%	310.5	2151	11.95	3.55	151	268	1.16	5.63
03/09/93	510	93.6%	310.6	2150	6.29	6.60	137	276	1.16	5.60
03/10/93	520	93.0%	310.5	2172	0.67	13.13	152	228	1.16	5.57
03/11/93	473	95.4%	307.7	2214	12.80	0.90	102	273	1.17	5.61
03/12/93	434	95.1%	309.3	2116	4.02	6.92	104	202	1.16	5.75
03/13/93	423	94.3%	304.6	2043	5.28	6.69	116	184	1.16	5.70
03/14/93	515	94.2%	307.6	2137	6.91	7.57	124	301	1.15	5.62
03/15/93	482	93.3%	311.1	2117	4.76	7.68	142	269	1.16	5.60
03/16/93	484	93.3%	310.0	2134	6.85	6.23	143	320	1.17	5.62
03/17/93	512	92.9%	308.8	2199	3.02	10.55	155	299	1.16	5.67
03/18/93	471	94.7%	306.4	2094	9.42	4.38	112	212	1.17	5.56
03/19/93	514	94.8%	312.5	2099	9.06	5.56	109	17	1.17	5.59
03/20/93	486	95.4%	312.6	2085	2.88	10.22	96	316	1.17	5.67
03/21/93	472	97.7%	313.8	2089	9.88	2.97	48	308	1.17	5.63
03/22/93	479	94.6%	298.6	2039	9.29	4.76	111	263	1.17	5.71
03/23/93	490	93.8%	300.7	2077	1.64	12.01	129	255	1.17	5.70
03/24/93	487	93.3%	300.1	2130	13.39	5.47	142	254	1.17	5.68
03/25/93	490	94.1%	296.4	2078	2.38	11.53	123	231	1.16	5.69
03/26/93	437	93.9%	294.9	2031	11.10	1.90	123	205	1.17	5.65
03/27/93	457	93.3%	294.6	1979	1.48	8.26	133	222	1.17	5.66
03/28/93	482	93.5%	303.3	2016	13.60	1.90	131	277	1.17	5.58
03/29/93	450	93.7%	297.2	1976	2.29	7.92	125	202	1.17	5.80
03/30/93	451	93.2%	298.6	1937	11.02	1.72	132	274	1.38	5.75
03/31/93	346	94.0%	284.5	1863	1.64	6.63	112	220	1.17	5.80
04/02/93	458	93.9%	290.7	2016	3.06	10.59	124	275	1.17	5.73
04/03/93	446	94.3%	289.8	2041	6.63	6.10	117	235	1.16	5.78
04/04/93	359	95.8%	283.0	1952	4.07	8.89	82	223	1.16	5.79
04/05/93	460	93.9%	309.7	2033	2.37	10.70	124	291	1.16	5.80
04/06/93	433	93.0%	310.1	1984	9.15	2.58	140	227	1.17	5.86
04/07/93	441	94.3%	313.6	1975	0.04	10.61	112	307	1.17	5.80
04/08/93	374	95.3%	309.9	1904	4.47	2.72	89	279	1.17	5.93

Appendix G - Data Summary For Major Process Variables

DATE	SLURRY pH B	SLURRY CARBONATE	TOTAL WATER TO FACILITY	AIR TO FAS	AIR TO ARS	TOTAL FGD DP	Number of Ciculation Pumps Running
	ph	mmole/l	gpm	scfm	scfm	Inches Water Column	
	AIC-138B	AIT-135	FI-264	FIC-344	FIC-345	PDI-115-01	
03/04/93	5.83	47.10	629	7743	6995	1.13	5
03/05/93	5.77	41.19	639	7899	7002	1.27	5
03/06/93	5.89	81.34	750	7896	7000	2.31	6
03/07/93	5.87	22.05	981	7914	6999	5.07	7
03/08/93	5.80	17.86	1118	7890	7007	6.67	8
03/09/93	5.71	56.08	1144	7894	7002	6.36	8
03/10/93	5.69	66.36	1052	7899	6998	6.63	7
03/11/93	5.72	70.40	1073	7895	7002	5.58	7
03/12/93	5.87	65.34	987	7902	6994	4.39	5
03/13/93	5.82	52.99	976	7893	7000	4.23	5
03/14/93	5.74	53.80	1119	7896	6998	6.15	6
03/15/93	5.71	44.13	1014	7833	7108	5.44	6
03/16/93	5.74	42.52	1063	8004	7003	5.48	6
03/17/93	5.80	49.11	1033	7970	7014	5.93	6
03/18/93	5.69	44.10	999	7951	7049	5.26	6
03/19/93	5.73	48.37	851	7014	7998	6.12	7
03/20/93	5.81	57.38	1086	7000	7996	5.64	6
03/21/93	5.76	42.92	1078	6999	8000	5.24	6
03/22/93	5.85	55.43	1057	7006	8013	5.64	7
03/23/93	5.84	56.76	1089	6991	8007	6.19	8
03/24/93	5.82	47.32	1110	7005	7963	6.16	8
03/25/93	5.90	61.14	1085	7186	7951	6.23	8
03/26/93	6.15	58.24	1059	7200	8093	4.97	7
03/27/93	6.39	59.77	1061	7294	8105	5.36	7
03/28/93	6.32	49.01	1148	7346	8022	6.12	8
03/29/93	6.42	64.99	1082	7503	7998	5.28	7
03/30/93	6.47	62.85	1146	7420	7930	5.30	7
03/31/93	6.27	51.75	934	7097	8085	3.40	6
04/02/93	5.53	60.26	862	7005	8000	5.17	6
04/03/93	5.56	58.40	851	7006	7996	5.06	6
04/04/93	5.57	47.53	780	7006	8004	3.62	6
04/05/93	5.56	51.85	841	7032	8088	5.33	6
04/06/93	5.60	58.85	826	7108	8092	4.70	6
04/07/93	5.58	55.90	968	7185	8055	4.85	6
04/08/93	5.70	65.02	937	9002	7985	4.07	6

Appendix G - Data Summary For Major Process Variables

DATE	TOTAL MW	% SO2 REMOVAL	FLUE GAS INLET FGD	SO2 INLET FGD	LIMESTONE FEED TO ABS	LIMESTONE FEED TO ABS	SO2 OUTLET	ABS. MAKEUP WATER FLOW	SLURRY DEN.	SLURRY pH A
	MW	%	F	ppm	tons/hr	tons/hr	ppm	gpm	GM/ML	ph
			TR-111	AIT-109	SIC-425A	SIC-425B	AR-126	FIC-127	AIC-134	AIC-138A
04/09/93	142	99.9%	296.9	1405	3.59	0.31	2	8	1.17	6.17
04/16/93	168	99.7%	303.1	1555	0.04	4.30	4	34	1.12	6.15
04/17/93	169	99.7%	307.0	1871	0.04	3.85	5	0	1.14	6.06
04/18/93	264	99.2%	283.7	1688	0.13	6.48	14	107	1.15	5.88
04/19/93	426	93.3%	311.3	1979	10.22	0.31	132	285	1.16	5.78
04/21/93	423	93.6%	311.6	1690	3.46	7.17	108	248	1.16	5.85
04/22/93	429	93.3%	307.6	1721	4.29	6.48	115	258	1.16	5.80
04/23/93	467	92.5%	316.3	1913	11.63	0.31	143	204	1.16	5.77
04/24/93	424	92.1%	314.0	1887	10.42	0.31	148	257	1.17	5.84
04/25/93	459	93.0%	313.0	2097	11.23	3.21	146	224	1.17	5.80
04/26/93	470	92.9%	314.3	2010	0.04	11.58	142	240	1.16	5.83
04/27/93	480	92.6%	318.1	2029	0.03	12.50	150	234	1.16	5.62
04/28/93	483	92.1%	319.4	2046	4.73	7.18	162	192	1.17	5.69
04/29/93	461	93.3%	314.6	2354	5.79	6.82	159	280	1.18	5.65
04/30/93	436	95.1%	315.4	2463	7.23	8.89	121	265	1.19	5.65
05/01/93	424	95.2%	315.0	2415	10.40	5.50	117	279	1.18	5.70
05/02/93	429	94.8%	316.2	2400	8.14	8.03	125	254	1.19	5.72
05/03/93	466	96.6%	316.9	2458	2.37	13.37	83	216	1.19	5.79
05/04/93	451	94.1%	316.9	2426	7.26	8.51	142	61	1.19	5.79
05/05/93	411	95.5%	301.7	2437	1.57	13.22	109	48	1.19	5.86
05/06/93	445	94.5%	312.4	2525	6.35	9.61	138	94	1.19	5.82
05/07/93	448	93.9%	313.1	2388	10.98	5.52	145	201	1.19	5.92
05/08/93	438	95.3%	312.3	2429	3.59	13.98	115	285	1.19	5.89
05/09/93	482	93.4%	314.6	2518	4.02	13.14	167	324	1.19	5.99
05/10/93	472	93.4%	310.8	2511	3.98	12.92	165	324	1.19	6.00
05/12/93	452	95.3%	309.6	2449	3.48	11.39	114	261	1.19	6.05
05/13/93	447	96.2%	311.7	2467	10.20	6.12	93	216	1.19	6.06
05/14/93	458	96.5%	316.4	2347	4.03	10.87	81	251	1.19	6.09
05/15/93	450	95.6%	315.1	2399	10.34	4.98	106	248	1.19	6.09
05/16/93	461	95.0%	315.1	2482	8.08	8.09	124	255	1.19	6.10
05/17/93	451	95.6%	314.1	2408	6.21	9.59	106	68	1.19	6.17
05/18/93	450	97.3%	313.0	2451	5.11	9.86	67	222	1.19	6.15
05/19/93	397	95.8%	309.5	2478	9.89	4.48	103	163	1.19	6.03
05/20/93	451	96.3%	315.9	2626	5.18	12.34	98	251	1.19	6.15
05/21/93	391	97.5%	317.1	2530	2.41	10.06	63	171	1.19	6.20

Appendix G - Data Summary For Major Process Variables

DATE	SLURRY pH B	SLURRY CARBONATE	TOTAL WATER TO FACILITY	AIR TO FAS	AIR TO ARS	TOTAL FGD DP	Number of Ciculation Pumps Running
	ph	mmole/l	gpm	scfm	scfm	Inches Water Column	
	AIC-138B	AIT-135	FI-264	FIC-344	FIC-345	PDI-115-01	
04/09/93	5.91	74.95	552	9396	9269	0.45	7
04/16/93	5.60	90.14	830	7505	8003	1.09	5
04/17/93	6.26	82.27	816	7509	8003	1.14	5
04/18/93	6.23	66.22	890	7492	7991	3.18	6
04/19/93	6.78	62.77	1133	7503	7998	4.98	6
04/21/93	6.59	61.88	1129	7497	7997	4.71	6
04/22/93	6.41	54.62	1129	7499	8002	4.88	6
04/23/93	6.27	52.62	1101	7507	8008	5.74	6
04/24/93	4.69	56.05	1203	7505	7992	4.98	6
04/25/93	1.99	55.61	1150	7506	8002	5.40	5
04/26/93	6.69	61.62	1135	7495	7990	5.32	4
04/27/93	3.80	60.81	1169	7514	7992	5.63	5
04/28/93	5.81	90.29	1150	7509	8007	5.85	5
04/29/93	5.76	61.75	1229	7577	8023	5.93	6
04/30/93	5.73	56.99	1222	10006	8501	5.84	8
05/01/93	5.76	57.49	1238	9992	8501	5.50	8
05/02/93	5.76	53.44	1222	10002	8502	5.66	8
05/03/93	5.81	54.32	1172	10002	9903	6.63	9
05/04/93	5.81	53.97	958	9999	10001	6.65	9
05/05/93	5.86	55.98	932	9997	10001	6.31	10
05/06/93	5.82	56.32	1022	10002	9999	6.39	9
05/07/93	5.90	80.03	1200	9144	8893	6.07	8
05/08/93	5.86	74.42	1205	8398	8501	6.28	9
05/09/93	5.94	76.12	1284	9993	10001	7.19	9
05/10/93	5.95	76.18	1290	10005	9999	7.04	9
05/12/93	6.00	89.48	1216	9998	9996	6.80	10
05/13/93	6.03	101.27	1194	10009	9995	6.85	10
05/14/93	6.05	98.00	1267	9997	9998	6.97	10
05/15/93	6.06	99.86	1250	9994	10004	6.24	8
05/16/93	6.06	107.32	1213	10007	9998	6.11	8
05/17/93	6.12	127.42	1026	10000	9997	6.04	8
05/18/93	6.12	126.27	1246	10006	9997	6.50	10
05/19/93	6.00	73.50	1141	6058	11572	5.39	9
05/20/93	6.11	123.27	1262	9015	9822	6.71	9
05/21/93	6.17	116.48	1123	9995	10005	5.33	8

Appendix G - Data Summary For Major Process Variables

DATE	TOTAL MW	% SO2 REMOVAL	FLUE GAS INLET FGD	SO2 INLET FGD	LIMESTONE FEED TO ABS	LIMESTONE FEED TO ABS	SO2 OUTLET	ABS. MAKEUP WATER FLOW	SLURRY DEN.	SLURRY pH A
	MW	%	F	ppm	tons/hr	tons/hr	ppm	gpm	GM/ML	ph
			TR-111	AIT-109	SIC-425A	SIC-425B	AR-126	FIC-127	AIC-134	AIC-138A
05/22/93	305	96.4%	315.6	1974	5.85	5.48	70	84	1.19	6.14
05/23/93	243	96.4%	307.3	1923	8.52	1.81	69	50	1.19	6.18
05/24/93	306	97.9%	313.4	2851	0.03	11.44	61	93	1.19	6.15
05/25/93	321	97.8%	315.1	2607	3.31	8.98	56	117	1.19	6.16
05/26/93	308	98.1%	320.4	2375	8.25	4.22	46	102	1.19	6.19
05/27/93	313	97.5%	320.9	2392	5.61	4.75	60	112	1.19	6.19
05/28/93	308	96.3%	317.4	2427	6.98	3.88	90	95	1.19	6.04
05/29/93	312	96.5%	322.9	1988	5.17	4.44	69	94	1.19	6.12
05/30/93	335	94.8%	321.8	1920	3.51	6.07	99	168	1.19	6.19
05/31/93	347	94.8%	319.1	1872	4.94	4.02	97	172	1.19	6.14
06/01/93	419	98.7%	292.7	2193	2.41	2.67	29	35	1.19	6.27
06/02/93	449	99.3%	299.4	2397	0.04	6.46	16	16	1.19	6.24
06/03/93	458	99.4%	298.9	2374	1.89	4.09	15	3	1.19	6.20
06/04/93	458	97.5%	309.2	1945	3.82	6.46	49	87	1.19	6.10
06/09/93	402	93.1%	319.8	1960	3.61	9.38	134	171	1.17	6.19
06/10/93	424	92.8%	321.5	1800	7.08	3.61	130	184	1.16	6.21
06/11/93	442	92.2%	316.3	2010	9.33	4.02	157	188	1.16	6.18
06/12/93	431	91.9%	316.4	1785	3.34	7.78	144	170	1.16	6.19
06/13/93	435	91.5%	319.7	1768	8.07	3.47	150	194	1.16	6.19
06/14/93	437	92.0%	321.0	1735	1.49	11.08	138	205	1.17	6.22
06/15/93	406	92.6%	317.3	2117	7.20	6.71	157	167	1.17	6.19
06/16/93	345	92.6%	315.9	1553	4.46	4.37	115	141	1.16	6.30
06/17/93	452	92.7%	321.3	1768	8.60	4.35	130	240	1.16	6.25
06/18/93	437	93.6%	323.3	1842	2.43	9.02	118	96	1.16	6.28
06/19/93	379	93.1%	315.0	1775	5.99	3.78	123	73	1.16	6.36
06/21/93	421	87.1%	320.8	1957	11.78	3.53	253	217	1.16	6.16
06/23/93	407	94.6%	321.1	1772	1.09	12.71	96	226	1.16	6.33
06/24/93	421	93.4%	319.9	1863	6.82	5.96	123	219	1.15	6.31
06/25/93	243	96.9%	303.8	1718	1.78	5.89	53	108	1.16	6.42
06/29/93	264	93.4%	290.1	1623	5.62	1.02	107	119	1.16	8.53
06/30/93	387	91.7%	321.3	1732	8.06	1.12	143	203	1.17	5.99
07/02/93	385	92.6%	320.0	1685	1.29	10.38	124	214	1.16	6.39
07/03/93	429	92.0%	327.2	1683	0.02	12.72	135	238	1.16	6.43
07/06/93	415	92.5%	324.9	1682	9.24	0.31	127	200	1.16	6.32
07/07/93	427	92.3%	325.2	1762	10.10	5.27	135	227	1.15	5.71

Appendix G - Data Summary For Major Process Variables

DATE	SLURRY pH B	SLURRY CARBONATE	TOTAL WATER TO FACILITY	AIR TO FAS	AIR TO ARS	TOTAL FGD DP	Number of Ciculation Pumps Running
	ph	mmole/l	gpm	scfm	scfm	Inches Water Column	
	AIC-138B	AIT-135	FI-264	FIC-344	FIC-345	PDI-115-01	
05/22/93	6.11	75.47	1038	7565	7566	2.33	5
05/23/93	6.14	67.98	914	7493	7494	1.73	5
05/24/93	6.11	76.26	1390	7499	7494	2.63	8
05/25/93	6.12	75.38	1403	7509	7495	3.16	9
05/26/93	6.15	96.40	1461	5613	6977	3.02	9
05/27/93	6.15	99.72	1430	7495	7505	2.65	7
05/28/93	6.00	51.89	1436	7501	7504	2.54	7
05/29/93	6.07	45.62	1387	7505	7495	2.49	6
05/30/93	6.14	57.12	1420	7493	7503	3.72	5
05/31/93	6.09	57.28	1431	7505	7497	4.07	5
06/01/93	6.22	54.45	1186	4520	5709	4.86	5
06/02/93	6.19	50.48	1150	3498	5000	0.99	7
06/03/93	6.15	44.40	1111	2914	4667	0.91	6
06/04/93	6.05	41.28	1338	7605	8205	3.65	6
06/09/93	6.14	56.23	1284	6992	8000	5.40	7
06/10/93	6.17	53.88	1315	6987	8000	5.77	6
06/11/93	6.15	54.69	1359	7000	8008	6.24	7
06/12/93	6.15	53.07	1296	7004	7997	5.80	6
06/13/93	6.16	53.31	1291	7002	7997	5.86	6
06/14/93	6.18	56.07	1335	7004	7987	6.02	6
06/15/93	6.16	55.61	1322	7022	7997	5.36	7
06/16/93	6.29	60.25	1236	6998	7988	3.89	6
06/17/93	6.24	55.60	1344	7006	7999	6.28	7
06/18/93	6.27	54.16	1108	6997	7999	2.53	6
06/19/93	6.35	56.28	1088	7004	7998	0.99	5
06/21/93	5.81	58.85	1354	6993	8006	6.48	8
06/23/93	6.31	56.98	1296	6991	8006	6.00	8
06/24/93	6.31	56.62	1282	6996	7999	5.83	7
06/25/93	6.42	41.69	1054	6999	8004	3.09	6
06/29/93	6.28	55.94	1130	7010	8003	3.05	5
06/30/93	5.94	57.46	1219	6997	8004	4.93	6
07/02/93	6.41	58.42	1288	6999	7995	4.86	6
07/03/93	6.46	59.77	1307	6997	7945	5.78	6
07/06/93	6.37	55.70	1276	7007	7924	5.51	6
07/07/93	5.71	57.51	1336	7002	7932	6.18	8

Appendix G - Data Summary For Major Process Variables

DATE	TOTAL MW	% SO2 REMOVAL	FLUE GAS INLET FGD	SO2 INLET FGD	LIMESTONE FEED TO ABS	LIMESTONE FEED TO ABS	SO2 OUTLET	ABS. MAKEUP WATER FLOW	SLURRY DEN.	SLURRY pH A
	MW	%	F	ppm	tons/hr	tons/hr	ppm	gpm	GM/ML	ph
			TR-111	AIT-109	SIC-425A	SIC-425B	AR-126	FIC-127	AIC-134	AIC-138A
07/08/93	427	91.8%	327.0	1911	5.22	8.04	157	222	1.16	5.73
07/09/93	427	92.2%	325.1	1910	4.44	8.80	149	215	1.16	5.69
07/10/93	398	93.0%	321.4	1732	0.73	10.30	121	182	1.16	5.78
07/12/93	413	92.1%	322.1	1909	2.84	8.51	151	221	1.17	5.70
07/13/93	431	93.6%	321.5	2021	9.70	0.31	130	197	1.15	5.75
07/14/93	440	98.6%	275.7	1726	2.36	1.34	25	11	1.17	6.10
07/15/93	427	90.6%	190.0	922	0.03	4.55	86	90	1.17	6.30
07/16/93	424	93.3%	325.7	1727	7.10	6.15	116	250	1.16	5.81
07/17/93	422	92.6%	324.8	1701	5.07	7.52	125	194	1.17	5.76
07/18/93	377	92.8%	316.2	1932	10.63	3.50	140	192	1.16	5.78
07/19/93	309	93.1%	283.3	1862	0.03	10.23	128	144	1.16	5.81
07/20/93	286	93.3%	278.9	1602	5.52	3.40	107	128	1.16	5.86
07/21/93	292	92.4%	279.0	1509	2.61	6.34	114	125	1.16	5.75
07/22/93	305	92.4%	292.9	1721	4.91	4.83	130	137	1.16	5.75
07/23/93	408	91.6%	320.9	1966	2.96	9.99	165	234	1.16	5.74
07/24/93	406	92.1%	322.9	1691	13.43	0.31	134	228	1.17	5.83
07/25/93	426	92.1%	326.0	1683	2.37	10.00	133	259	1.16	5.89
07/26/93	418	92.2%	325.2	1799	6.50	6.54	140	249	1.16	5.89
07/27/93	430	92.2%	327.3	1820	8.07	3.36	142	248	1.16	5.86
07/28/93	299	95.7%	315.8	1868	3.44	6.06	80	157	1.16	5.94
07/29/93	142	98.3%	302.1	1924	5.03	0.31	33	3	1.17	6.05
07/30/93	140	98.4%	297.5	1954	4.98	0.46	32	28	1.16	6.08
07/31/93	140	98.4%	300.7	1931	0.03	4.72	31	8	1.17	6.11
08/01/93	151	98.0%	300.8	1722	1.01	3.90	35	5	1.16	6.10
08/02/93	219	94.4%	277.9	1643	4.39	3.30	92	137	1.16	6.04
08/03/93	136	99.1%	291.3	1644	0.67	3.64	15	11	1.16	6.08
08/04/93	129	98.1%	296.0	1940	4.26	0.70	38	14	1.16	6.04
08/05/93	190	93.9%	264.0	1511	0.83	6.14	92	89	1.15	6.08
08/06/93	426	92.4%	314.7	1970	5.13	7.31	150	272	1.16	5.88
08/07/93	394	91.6%	313.7	1901	9.04	3.26	159	197	1.17	5.90
08/08/93	367	92.1%	313.2	1859	6.32	5.09	146	179	1.16	5.91
08/09/93	416	93.0%	316.3	1910	1.85	9.94	133	196	1.16	5.96
08/10/93	441	92.3%	319.8	1814	12.07	1.95	140	232	1.17	5.92
08/11/93	458	92.2%	319.7	2043	0.03	13.01	160	263	1.17	5.94
08/12/93	417	92.9%	320.0	1697	8.90	2.98	120	211	1.17	6.00

Appendix G - Data Summary For Major Process Variables

DATE	SLURRY pH B	SLURRY CARBONATE	TOTAL WATER TO FACILITY	AIR TO FAS	AIR TO ARS	TOTAL FGD DP	Number of Ciculation Pumps Running
	ph	mmole/l	gpm	scfm	scfm	Inches Water Column	
	AIC-138B	AIT-135	FI-264	FIC-344	FIC-345	PDI-115-01	
07/08/93	5.69	55.66	1286	6989	8000	6.09	7
07/09/93	5.72	56.20	1301	6993	8006	6.29	8
07/10/93	5.73	50.01	1286	6998	8002	5.52	7
07/12/93	5.65	54.01	1296	7004	8001	5.62	7
07/13/93	5.71	52.22	1273	7007	8031	5.57	8
07/14/93	6.09	96.60	858	9226	9229	1.35	3
07/15/93	6.32	82.34	968	4045	4449	5.57	3
07/16/93	5.78	68.87	1319	7006	7999	6.25	9
07/17/93	5.76	55.90	1302	6994	8003	6.08	9
07/18/93	5.65	57.03	1264	6999	8001	4.76	7
07/19/93	5.80	60.16	1174	7003	7989	3.37	5
07/20/93	5.83	58.71	1146	6992	8002	3.02	5
07/21/93	5.77	61.58	1180	7001	7996	3.13	6
07/22/93	5.77	59.33	1201	6995	8002	3.36	7
07/23/93	5.74	52.95	1390	6999	7996	5.60	8
07/24/93	5.86	59.29	1344	6997	7998	5.78	9
07/25/93	5.92	64.18	1340	7005	8000	6.16	8
07/26/93	5.89	59.65	1327	7007	7998	5.98	8
07/27/93	5.88	56.64	1361	7004	7995	6.42	9
07/28/93	5.98	53.49	1194	7009	7998	4.12	7
07/29/93	6.11	52.90	977	6996	8002	0.72	4
07/30/93	6.14	38.19	979	6998	8004	0.67	4
07/31/93	6.16	57.66	953	6997	8006	0.68	4
08/01/93	6.18	54.06	968	7002	7992	0.88	4
08/02/93	6.11	63.91	1150	6995	7997	2.81	6
08/03/93	6.18	60.20	956	6997	8001	0.80	5
08/04/93	6.12	45.29	970	6992	7999	0.73	4
08/05/93	6.17	55.20	1055	7004	7999	2.31	5
08/06/93	5.94	54.88	1333	6997	8001	5.36	8
08/07/93	5.98	52.04	1313	6996	8000	4.41	7
08/08/93	6.03	54.79	1278	6998	8003	3.84	7
08/09/93	6.07	61.72	1321	6997	8004	5.17	8
08/10/93	6.05	54.61	1357	7003	7995	5.89	9
08/11/93	6.06	57.38	1394	6999	8003	6.16	9
08/12/93	6.16	58.16	1311	6996	8008	5.32	8

Appendix G - Data Summary For Major Process Variables

DATE	TOTAL MW	% SO2 REMOVAL	FLUE GAS INLET FGD	SO2 INLET FGD	LIMESTONE FEED TO ABS	LIMESTONE FEED TO ABS	SO2 OUTLET	ABS. MAKEUP WATER FLOW	SLURRY DEN.	SLURRY pH A
	MW	%	F	ppm	tons/hr	tons/hr	ppm	gpm	GM/ML	ph
			TR-111	AIT-109	SIC-425A	SIC-425B	AR-126	FIC-127	AIC-134	AIC-138A
08/13/93	448	91.8%	319.9	1844	9.36	3.16	152	247	1.17	5.93
08/14/93	448	91.8%	319.9	1844	9.36	3.16	152	247	1.17	5.93
08/16/93	433	92.5%	320.8	1847	1.21	10.58	139	235	1.16	5.95
08/17/93	443	91.9%	320.3	1781	6.92	3.12	144	251	1.16	5.86
08/18/93	436	92.1%	320.9	2021	3.25	9.64	160	250	1.16	5.79
08/19/93	445	92.2%	320.5	2087	9.41	4.39	163	233	1.16	5.66
08/20/93	443	92.4%	318.0	2084	11.88	1.61	159	247	1.16	5.65
08/21/93	395	92.7%	317.1	2075	0.03	12.68	151	233	1.16	5.67
08/22/93	367	92.5%	315.9	1983	8.78	2.41	149	173	1.16	5.70
08/24/93	424	92.7%	320.5	2000	9.51	3.03	147	228	1.16	5.65
08/25/93	446	92.5%	320.7	2159	4.46	8.56	162	241	1.16	5.66
08/26/93	441	91.9%	322.1	2116	7.78	5.06	171	211	1.16	5.67
08/27/93	431	92.7%	320.3	2183	8.12	4.25	160	199	1.16	5.69
08/28/93	402	92.4%	317.0	1875	4.10	7.15	142	177	1.16	5.77
08/29/93	367	93.6%	314.2	1980	6.34	3.88	127	145	1.16	5.79
08/30/93	442	92.3%	319.3	2029	5.20	7.14	156	204	1.16	5.77
08/31/93	442	92.3%	319.3	2029	5.20	7.14	156	204	1.16	5.77
09/03/93	451	92.2%	315.9	2154	2.70	11.74	169	196	1.13	5.78
09/04/93	412	92.6%	314.9	2130	9.65	4.12	157	171	1.13	5.81
09/05/93	438	92.3%	316.0	2164	6.70	7.76	166	190	1.13	5.78
09/07/93	440	93.3%	316.1	2062	7.02	6.91	139	100	1.13	5.82
09/08/93	463	92.6%	316.8	2043	4.94	9.36	151	200	1.13	5.84
09/09/93	447	89.3%	314.8	2234	10.38	6.47	239	173	1.13	5.82
09/10/93	426	91.5%	312.5	1882	11.03	2.78	161	172	1.13	5.86
09/11/93	261	93.9%	315.3	1009	0.04	6.98	61	35	1.15	6.13
09/12/93	440	91.6%	320.9	2131	10.63	3.94	179	162	1.16	5.85
09/13/93	486	93.0%	326.1	1892	1.42	12.47	132	187	1.16	5.91
09/14/93	462	91.7%	316.7	2458	5.71	9.36	205	175	1.17	5.84
09/15/93	445	92.3%	315.9	3091	7.50	10.96	238	264	1.17	5.77
09/17/93	473	91.9%	325.9	2143	8.55	3.23	174	224	1.17	5.98
09/21/93	484	92.3%	325.4	2269	6.03	7.95	176	183	1.16	5.95
09/22/93	450	93.1%	331.6	2237	3.95	8.94	154	163	1.16	6.04
09/23/93	447	91.9%	330.3	2134	2.61	10.17	173	142	1.16	6.04
09/24/93	460	92.4%	333.0	1988	8.56	1.82	152	168	1.16	6.06
09/25/93	435	93.0%	330.9	2009	2.79	9.04	141	151	1.16	6.08

Appendix G - Data Summary For Major Process Variables

DATE	SLURRY pH B	SLURRY CARBONATE	TOTAL WATER TO FACILITY	AIR TO FAS	AIR TO ARS	TOTAL FGD DP	Number of Ciculation Pumps Running
	ph	mmole/l	gpm	scfm	scfm	Inches Water Column	
	AIC-138B	AIT-135	FI-264	FIC-344	FIC-345	PDI-115-01	
08/13/93	6.10	51.18	1394	7003	7997	6.11	9
08/14/93	6.10	51.18	1394	7003	7997	6.11	9
08/16/93	6.14	56.46	1343	6995	8002	5.74	8
08/17/93	5.49	60.22	1323	7004	8003	5.80	8
08/18/93	5.48	59.77	1313	7007	7996	5.51	8
08/19/93	5.50	74.59	1307	7000	8000	5.74	8
08/20/93	5.51	74.12	1300	7004	8002	5.76	8
08/21/93	5.53	72.95	1313	7527	8511	4.48	7
08/22/93	5.56	76.37	1238	6998	8002	3.81	6
08/24/93	5.54	64.79	1307	7006	7993	5.35	8
08/25/93	5.56	71.63	1343	7000	8000	5.61	8
08/26/93	5.59	66.35	1320	7006	7994	5.42	8
08/27/93	5.61	70.63	1324	7008	8002	5.46	8
08/28/93	5.69	72.70	1295	6996	8002	4.69	7
08/29/93	5.71	72.60	1255	7005	8003	4.38	7
08/30/93	5.71	72.60	1338	7007	7996	5.82	8
08/31/93	5.71	72.60	1338	7007	7996	5.82	8
09/03/93	5.81	71.20	1296	7225	8002	6.00	9
09/04/93	5.86	72.69	1301	7159	8001	5.14	8
09/05/93	5.83	70.26	1316	7170	7998	5.62	8
09/07/93	5.86	69.71	1337	7161	8003	5.42	8
09/08/93	5.87	74.48	1326	7168	7994	6.20	8
09/09/93	5.86	71.86	1321	7155	7998	6.09	9
09/10/93	5.87	73.60	1297	7158	8000	5.41	8
09/11/93	6.02	65.62	1071	7162	8008	2.58	6
09/12/93	5.74	70.77	1294	7161	7998	5.23	8
09/13/93	5.80	75.39	1317	7061	8012	6.84	9
09/14/93	5.74	69.46	1302	7005	7997	6.18	8
09/15/93	5.67	73.86	1367	7008	8000	6.20	10
09/17/93	5.87	76.33	1350	7995	9007	6.29	8
09/21/93	5.87	68.47	1370	6997	7996	6.34	9
09/22/93	5.96	73.51	1365	6989	8006	5.66	8
09/23/93	5.96	73.77	1297	7002	7997	5.52	8
09/24/93	5.98	69.68	1286	6992	7998	5.91	8
09/25/93	5.99	66.61	1288	6994	7997	5.53	8

Appendix G - Data Summary For Major Process Variables

DATE	TOTAL MW	% SO2 REMOVAL	FLUE GAS INLET FGD	SO2 INLET FGD	LIMESTONE FEED TO ABS	LIMESTONE FEED TO ABS	SO2 OUTLET	ABS. MAKEUP WATER FLOW	SLURRY DEN.	SLURRY pH A
	MW	%	F	ppm	tons/hr	tons/hr	ppm	gpm	GM/ML	ph
			TR-111	AIT-109	SIC-425A	SIC-425B	AR-126	FIC-127	AIC-134	AIC-138A
09/26/93	427	92.9%	330.5	1940	4.24	7.01	138	126	1.17	6.10
09/27/93	499	92.7%	330.8	2362	12.78	1.49	172	231	1.16	6.05
09/28/93	474	91.3%	330.1	2327	9.54	3.60	203	198	1.16	6.06
09/29/93	457	92.9%	330.1	2290	2.59	10.48	162	195	1.16	6.07
09/30/93	439	92.6%	332.4	2143	10.51	0.31	158	178	1.16	6.16
10/01/93	371	93.4%	332.1	2170	0.04	12.25	144	136	1.17	6.19
10/02/93	243	94.2%	330.5	2114	2.76	3.48	122	15	1.16	6.31
10/04/93	303	93.6%	334.0	2318	1.36	6.80	149	38	1.17	6.25
10/05/93	394	91.8%	332.5	2262	0.04	10.87	186	87	1.17	5.99
10/06/93	454	91.7%	334.4	2125	7.47	3.49	176	165	1.17	6.19
10/07/93	434	92.7%	335.1	2211	5.17	5.87	161	189	1.16	6.20
10/08/93	424	92.4%	332.1	2278	8.77	1.75	174	168	1.17	6.18
10/09/93	354	92.2%	326.5	2130	3.24	6.30	165	138	1.16	6.25
10/10/93	343	92.7%	327.6	2112	5.99	3.10	153	77	1.17	6.27
10/11/93	435	91.3%	205.5	714	1.05	3.90	62	51	1.16	7.15
10/13/93	418	99.3%	53.1	-32	0.05	0.31	0	0	1.00	7.81
10/18/93	133	97.9%	292.3	2771	1.55	4.32	59	0	1.13	6.47
10/19/93	137	99.1%	295.7	2016	4.79	0.31	18	13	1.17	6.55
10/20/93	158	98.2%	302.4	2022	2.20	1.87	37	1	1.18	6.37
10/21/93	151	99.0%	296.7	2094	3.63	0.42	21	1	1.18	6.37
10/22/93	143	98.7%	294.4	2048	1.46	4.12	26	0	1.17	6.40
10/23/93	143	98.5%	294.6	2019	0.04	4.20	30	1	1.17	6.36
10/24/93	118	99.7%	290.6	1743	0.32	3.10	6	5	1.17	6.54
10/25/93	142	98.3%	300.9	1803	2.68	0.75	30	0	1.17	6.47
10/26/93	155	98.6%	303.4	2153	0.18	4.48	30	10	1.17	6.46
10/27/93	204	97.6%	305.5	2107	3.92	0.31	50	0	1.17	6.44
10/28/93	182	98.0%	302.1	2150	2.26	2.52	42	0	1.17	6.47
10/29/93	135	98.7%	285.9	2016	0.05	4.98	26	0	1.17	6.49
10/30/93	138	98.6%	290.8	1912	1.46	3.01	27	1	1.17	6.56
10/31/93	108	99.2%	284.1	1813	2.55	0.31	14	0	1.17	6.63
11/01/93	158	97.9%	301.3	1944	2.72	1.13	41	18	1.17	6.53
11/02/93	158	97.5%	302.4	1969	0.04	5.21	50	25	1.17	6.50
11/05/93	148	#N/A	295.0	1685	0.60	4.14	#N/A	29	1.17	6.65
11/06/93	158	#N/A	296.7	2053	0.14	5.41	#N/A	0	1.17	6.56
11/08/93	147	#N/A	294.1	2498	3.90	0.31	#N/A	3	1.17	5.76

Appendix G - Data Summary For Major Process Variables

DATE	SLURRY pH B	SLURRY CARBONATE	TOTAL WATER TO FACILITY	AIR TO FAS	AIR TO ARS	TOTAL FGD DP	Number of Ciculation Pumps Running
	ph	mmole/l	gpm	scfm	scfm	Inches Water Column	
	AIC-138B	AIT-135	FI-264	FIC-344	FIC-345	PDI-115-01	
09/26/93	6.02	64.38	1281	7003	7999	5.34	8
09/27/93	5.74	74.18	1359	6958	8033	6.87	9
09/28/93	5.97	70.88	1315	6991	8004	6.23	8
09/29/93	6.00	63.95	1306	6995	8001	5.86	8
09/30/93	6.10	76.23	1304	6990	7997	5.67	8
10/01/93	6.12	69.28	1221	6996	8001	4.16	7
10/02/93	6.23	69.36	1064	7002	7997	0.52	4
10/04/93	6.13	67.51	1097	7012	7991	1.75	5
10/05/93	5.99	52.36	1219	7017	7997	3.74	8
10/06/93	6.13	69.99	1270	7629	8872	4.93	8
10/07/93	6.14	70.29	1299	7975	8947	4.61	8
10/08/93	6.14	69.86	1316	7684	8576	4.43	8
10/09/93	6.19	71.93	1229	7756	8749	3.00	6
10/10/93	6.22	66.52	1166	7754	8743	2.98	6
10/11/93	7.12	70.82	1014	8551	9546	5.87	6
10/13/93	7.85	-50.06	791	5997	6002	5.14	6
10/18/93	6.48	50.54	816	8928	9837	0.87	5
10/19/93	6.57	51.73	846	8963	9910	0.97	5
10/20/93	6.39	46.73	929	8988	9476	1.19	5
10/21/93	6.42	34.31	916	9002	8969	1.08	5
10/22/93	6.43	37.88	907	9016	8996	0.95	5
10/23/93	6.41	34.34	941	9008	9002	0.94	5
10/24/93	6.60	38.35	889	9006	8991	0.74	5
10/25/93	6.54	34.70	917	8998	8996	1.00	5
10/26/93	6.53	37.68	1010	8998	9011	1.05	5
10/27/93	6.52	37.41	913	8997	9000	1.17	5
10/28/93	6.58	36.68	933	9003	8998	1.08	5
10/29/93	6.61	36.80	902	9006	9007	0.88	5
10/30/93	6.70	39.24	977	9005	8997	0.91	5
10/31/93	6.81	38.22	858	9001	8997	0.66	5
11/01/93	6.72	37.32	986	8989	9006	1.12	5
11/02/93	6.70	37.04	956	8998	9001	1.14	5
11/05/93	6.86	39.43	905	9001	9893	1.04	5
11/06/93	6.79	35.78	876	8995	10003	1.12	5
11/08/93	5.67	34.09	893	8997	9992	1.03	5

Appendix G - Data Summary For Major Process Variables

DATE	TOTAL MW	% SO2 REMOVAL	FLUE GAS INLET FGD	SO2 INLET FGD	LIMESTONE FEED TO ABS	LIMESTONE FEED TO ABS	SO2 OUTLET	ABS. MAKEUP WATER FLOW	SLURRY DEN.	SLURRY pH A
	MW	%	F	ppm	tons/hr	tons/hr	ppm	gpm	GM/ML	ph
			TR-111	AIT-109	SIC-425A	SIC-425B	AR-126	FIC-127	AIC-134	AIC-138A
11/11/93	162	#N/A	305.1	2342	6.02	0.52	#N/A	31	1.17	5.79
11/12/93	159	#N/A	303.4	2472	0.04	6.46	#N/A	52	1.17	5.73
11/13/93	146	#N/A	302.5	2289	3.68	2.23	#N/A	38	1.17	5.73
11/14/93	143	#N/A	299.2	2240	5.56	0.31	#N/A	33	1.17	5.76
11/23/93	476	92.6%	304.6	1754	10.04	0.31	130	257	1.17	5.66
11/24/93	493	92.4%	299.2	1716	4.85	6.15	131	306	1.17	5.67
11/25/93	486	92.1%	302.4	1831	2.67	9.07	146	299	1.17	5.73
11/26/93	497	93.2%	309.7	2009	0.05	12.72	137	256	1.17	5.78
11/27/93	493	92.6%	311.4	2154	7.55	5.37	159	283	1.17	5.85
11/28/93	493	92.6%	311.4	2151	7.27	5.62	159	274	1.17	5.86
11/29/93	493	92.6%	311.4	2151	7.27	5.62	159	274	1.17	5.86
11/30/93	493	92.6%	311.4	2151	7.27	5.62	159	274	1.17	5.86
12/04/93	474	92.2%	312.4	1684	9.92	0.31	131	308	1.17	6.10
12/05/93	475	93.1%	315.5	1769	2.41	8.17	122	269	1.17	6.12
12/06/93	490	91.5%	311.7	2096	6.04	6.22	178	349	1.17	6.08
12/07/93	488	91.4%	313.5	2093	4.05	8.15	180	328	1.17	6.00
12/08/93	444	91.5%	313.5	2107	5.98	5.46	179	307	1.17	6.07
12/09/93	448	91.5%	317.0	2171	6.50	4.14	184	331	1.17	6.12
12/10/93	459	93.0%	310.9	2145	0.42	11.43	151	330	1.17	6.11
12/11/93	439	93.1%	313.3	2077	7.89	2.34	144	357	1.17	6.11
12/12/93	454	93.0%	319.9	2115	5.38	5.61	149	355	1.17	6.17
12/13/93	490	92.8%	324.3	2163	1.39	11.53	157	370	1.17	6.34
12/14/93	488	92.4%	321.0	2510	7.93	5.64	190	352	1.17	6.21
12/22/93	465	93.3%	317.4	1856	6.63	3.96	125	335	1.17	6.31
12/23/93	407	94.8%	318.7	2001	6.42	1.11	104	277	1.17	6.29
12/24/93	378	93.2%	313.6	2029	4.41	5.18	138	285	1.17	6.28
01/01/94	371	93.5%	320.1	2124	0.04	9.40	139	249	1.17	6.43
01/02/94	453	92.8%	321.3	2737	3.35	11.53	197	335	1.17	6.60
01/03/94	453	92.8%	321.3	2737	3.35	11.53	197	335	1.17	6.60
01/04/94	461	93.4%	318.9	2287	4.91	7.75	150	309	1.17	6.78
01/05/94	392	94.3%	306.3	1597	0.06	7.71	90	244	1.17	6.90
01/06/94	426	93.5%	314.5	1970	4.21	5.74	128	317	1.17	6.81
01/07/94	496	92.8%	320.0	2243	0.11	12.14	160	353	1.17	6.71
01/08/94	489	92.8%	319.6	2300	11.64	0.32	165	342	1.17	6.63
01/09/94	217	97.7%	301.7	2474	4.11	2.14	56	129	1.17	6.94

Appendix G - Data Summary For Major Process Variables

DATE	SLURRY pH B	SLURRY CARBONATE	TOTAL WATER TO FACILITY	AIR TO FAS	AIR TO ARS	TOTAL FGD DP	Number of Ciculation Pumps Running
	ph	mmole/l	gpm	scfm	scfm	Inches Water Column	
	AIC-138B	AIT-135	FI-264	FIC-344	FIC-345	PDI-115-01	
11/11/93	5.80	37.55	986	8998	10000	0.96	5
11/12/93	5.74	34.42	1006	9006	9995	0.88	5
11/13/93	5.76	34.16	1004	9002	10001	0.83	5
11/14/93	5.79	34.49	996	9006	9999	0.77	5
11/23/93	5.92	63.13	1332	8997	10002	6.12	4
11/24/93	5.85	63.73	1373	8990	10003	6.45	5
11/25/93	5.88	64.00	1396	9038	9997	6.34	10
11/26/93	5.96	80.32	1382	8996	10004	7.32	10
11/27/93	5.96	81.66	1427	10062	11993	7.25	10
11/28/93	5.96	81.64	1427	10086	12030	7.22	10
11/29/93	5.96	81.64	1427	10086	12030	7.22	11
11/30/93	5.96	81.64	1427	10086	12030	7.22	11
12/04/93	5.98	76.72	1391	10005	11997	6.68	11
12/05/93	6.00	82.48	1342	9997	11998	6.72	11
12/06/93	5.94	82.11	1423	10001	12002	6.44	10
12/07/93	5.98	86.01	1454	10000	11999	6.47	10
12/08/93	6.02	89.23	1420	10003	12000	5.33	10
12/09/93	6.08	83.58	1436	10006	11991	5.67	10
12/10/93	6.05	82.94	1404	10002	11996	5.64	10
12/11/93	6.10	81.26	1396	9994	12002	4.79	7
12/12/93	6.11	82.98	1403	9997	12001	5.10	7
12/13/93	6.12	83.70	1425	10000	11998	6.03	8
12/14/93	6.11	80.95	1455	10007	11996	5.78	8
12/22/93	6.29	78.75	1412	11238	12916	5.81	8
12/23/93	6.31	74.61	1357	14228	14558	4.32	7
12/24/93	6.24	71.55	1285	14842	14832	3.89	7
01/01/94	6.45	80.06	1244	10101	12608	3.46	8
01/02/94	6.30	59.84	1409	10038	12580	5.57	8
01/03/94	6.30	59.84	1409	10038	12580	5.57	8
01/04/94	6.40	65.54	1408	10047	12574	5.38	6
01/05/94	6.63	71.10	1268	10039	12580	3.91	5
01/06/94	6.49	58.20	1338	10051	12572	4.77	5
01/07/94	6.42	54.14	1449	10038	12579	6.16	5
01/08/94	6.43	54.43	1429	10035	12580	5.89	6
01/09/94	6.64	50.50	1122	9997	12573	1.05	8

Appendix G - Data Summary For Major Process Variables

DATE	TOTAL MW	% SO2 REMOVAL	FLUE GAS INLET FGD	SO2 INLET FGD	LIMESTONE FEED TO ABS	LIMESTONE FEED TO ABS	SO2 OUTLET	ABS. MAKEUP WATER FLOW	SLURRY DEN.	SLURRY pH A
	MW	%	F	ppm	tons/hr	tons/hr	ppm	gpm	GM/ML	ph
			TR-111	AIT-109	SIC-425A	SIC-425B	AR-126	FIC-127	AIC-134	AIC-138A
01/10/94	163	98.8%	299.3	2145	0.05	4.32	26	70	1.17	7.08
01/11/94	160	98.9%	299.6	2051	0.05	4.30	22	62	1.17	7.06
01/12/94	120	99.0%	271.1	1974	0.60	3.10	20	40	1.17	8.15
01/13/94	363	94.3%	296.1	2288	7.91	2.28	130	195	1.17	7.32
01/14/94	458	94.1%	319.8	2391	0.42	11.80	142	235	1.17	6.64
01/15/94	476	93.9%	319.2	2371	11.87	0.32	144	171	1.17	6.66
01/16/94	492	93.5%	326.6	2270	3.44	8.63	147	189	1.17	6.64
01/17/94	421	96.7%	321.5	1790	2.71	5.79	59	173	1.17	6.21
01/19/94	404	93.8%	321.9	1796	2.09	6.44	111	216	1.17	5.79
01/20/94	457	93.5%	326.6	2114	8.41	1.83	137	195	1.17	5.73
01/21/94	432	93.2%	328.8	2134	1.36	9.17	145	236	1.17	5.75
01/22/94	442	92.5%	332.4	2129	4.85	5.38	160	247	1.17	5.74
01/23/94	454	92.6%	332.8	2124	7.27	3.31	157	228	1.17	5.65
01/24/94	487	94.6%	316.9	2103	3.81	5.75	114	215	3.88	6.32
01/25/94	362	94.3%	304.4	2011	3.14	5.80	115	217	1.17	6.17
01/26/94	451	92.6%	330.6	2133	3.60	7.12	158	265	1.17	6.00
01/27/94	448	92.9%	332.8	2025	5.47	5.45	143	219	1.17	5.91
01/28/94	294	95.0%	325.1	1740	1.47	5.15	88	181	1.15	6.02
02/01/94	133	99.1%	288.1	2139	3.11	0.46	19	4	1.16	6.04
02/02/94	144	98.8%	295.9	2134	0.05	3.66	25	0	1.17	6.03
02/03/94	160	98.3%	298.7	2342	2.38	2.65	40	9	1.17	6.01
02/04/94	142	98.8%	292.7	2303	3.75	0.50	27	27	1.17	6.10
02/05/94	138	99.0%	296.0	2289	0.05	4.81	24	6	1.17	6.06
02/07/94	452	91.5%	297.7	2220	6.19	6.48	190	208	1.17	5.82
02/08/94	315	92.1%	289.2	1161	0.70	5.54	92	124	1.17	5.99
02/09/94	447	93.4%	304.9	2406	5.59	6.80	159	308	1.17	5.83
02/10/94	468	92.5%	308.8	2263	5.99	6.48	170	307	1.17	5.83
02/11/94	472	93.3%	311.2	1596	2.59	6.20	107	235	1.17	5.91
02/12/94	443	93.0%	309.7	1563	5.85	3.00	109	259	1.17	5.90
02/13/94	412	93.0%	310.8	2242	8.03	3.28	158	251	1.17	5.84
02/14/94	427	93.0%	314.6	2240	0.05	12.26	157	329	1.17	5.83
02/15/94	436	93.0%	314.6	2052	3.93	7.43	144	335	1.17	5.90
02/16/94	422	92.8%	316.2	2204	1.25	9.51	158	316	1.17	5.92
02/17/94	355	93.9%	321.4	1995	5.31	2.48	121	298	1.17	6.04
02/18/94	299	93.6%	320.7	1996	2.10	4.79	128	225	1.17	6.07

Appendix G - Data Summary For Major Process Variables

DATE	SLURRY pH B	SLURRY CARBONATE	TOTAL WATER TO FACILITY	AIR TO FAS	AIR TO ARS	TOTAL FGD DP	Number of Ciculation Pumps Running
	ph	mmole/l	gpm	scfm	scfm	Inches Water Column	
	AIC-138B	AIT-135	FI-264	FIC-344	FIC-345	PDI-115-01	
01/10/94	6.77	53.69	1009	10010	12568	0.86	8
01/11/94	6.86	51.38	994	10546	10295	0.84	7
01/12/94	6.98	53.84	957	11003	8764	0.86	7
01/13/94	6.66	57.16	1215	10495	9871	4.02	7
01/14/94	6.59	58.03	1352	9992	11001	5.07	7
01/15/94	6.60	51.73	1361	10004	11001	5.43	7
01/16/94	6.59	31.00	1394	9999	10999	5.57	8
01/17/94	6.06	53.05	1326	9994	11004	4.23	8
01/19/94	5.65	52.64	1320	9865	10980	4.10	7
01/20/94	5.63	60.43	1348	9996	10997	5.03	7
01/21/94	5.60	51.84	1372	9993	11008	4.50	8
01/22/94	5.65	57.20	1396	10002	11002	4.88	9
01/23/94	5.63	44.63	1385	9831	10962	5.31	6
01/24/94	6.30	53.77	1246	13140	11445	4.15	5
01/25/94	5.85	14.06	1254	10001	11000	4.18	5
01/26/94	5.81	33.25	1394	10010	10995	5.00	5
01/27/94	5.79	47.22	1343	9928	11991	5.43	5
01/28/94	5.98	48.85	1216	9988	13006	2.60	5
02/01/94	5.98	49.40	1138	10023	12999	0.59	9
02/02/94	5.98	46.09	1154	10015	12748	0.71	7
02/03/94	5.98	40.34	1163	9998	12502	0.85	10
02/04/94	5.98	43.37	1177	9998	12499	0.58	9
02/05/94	5.98	39.72	1125	9998	12500	0.53	9
02/07/94	5.82	52.79	1409	9981	12493	6.11	9
02/08/94	5.86	41.63	1253	10001	12483	3.39	9
02/09/94	5.70	51.81	1468	9997	12173	5.95	9
02/10/94	5.65	48.01	1447	10004	12497	6.22	9
02/11/94	5.72	45.91	1394	10000	12502	6.15	9
02/12/94	5.69	44.37	1423	9994	12505	5.88	7
02/13/94	5.61	43.17	1430	10007	12490	5.39	6
02/14/94	5.66	46.19	1460	10006	12496	5.91	5
02/15/94	5.74	56.45	1474	10001	12504	6.12	5
02/16/94	5.72	44.17	1669	9996	12502	5.83	6
02/17/94	5.91	48.13	1689	10003	12497	3.59	6
02/18/94	5.94	45.91	1690	10003	12494	2.14	5

Appendix G - Data Summary For Major Process Variables

DATE	TOTAL MW	% SO2 REMOVAL	FLUE GAS INLET FGD	SO2 INLET FGD	LIMESTONE FEED TO ABS	LIMESTONE FEED TO ABS	SO2 OUTLET	ABS. MAKEUP WATER FLOW	SLURRY DEN.	SLURRY pH A
	MW	%	F	ppm	tons/hr	tons/hr	ppm	gpm	GM/ML	ph
			TR-111	AIT-109	SIC-425A	SIC-425B	AR-126	FIC-127	AIC-134	AIC-138A
02/19/94	266	94.4%	323.3	1902	5.23	0.31	107	267	1.17	6.11
02/20/94	255	93.7%	319.8	1989	1.63	4.01	125	234	1.17	6.13
02/21/94	285	94.2%	318.5	1830	3.19	3.98	106	241	1.17	6.13
02/22/94	295	93.6%	318.7	2185	1.47	5.93	139	233	1.17	6.15
02/23/94	293	93.3%	315.9	2230	2.58	4.56	150	236	1.17	6.09
02/24/94	293	94.0%	318.3	1769	4.41	0.68	105	208	1.17	6.17
02/25/94	279	94.7%	318.5	1816	0.05	5.56	96	117	1.17	6.21
02/26/94	279	93.9%	319.6	2193	3.90	2.40	134	149	1.17	6.26
02/27/94	262	94.8%	321.6	2089	4.16	1.54	109	152	1.17	6.29
02/28/94	287	95.5%	323.4	1844	0.05	6.58	84	100	1.17	6.31
03/01/94	287	93.5%	323.4	2016	1.14	5.61	130	148	1.17	6.25
03/02/94	285	93.5%	323.1	2041	4.93	1.43	132	166	1.17	6.28
03/03/94	287	93.5%	324.1	1625	0.73	5.13	106	194	1.17	6.31
03/04/94	281	94.5%	325.4	1475	3.17	1.35	82	149	1.17	6.29
03/05/94	278	92.9%	330.6	2199	1.45	5.82	156	180	1.17	6.19
03/06/94	256	94.5%	326.5	1510	3.85	0.40	83	161	1.17	6.34
03/07/94	288	93.2%	326.7	1961	2.46	4.28	133	189	1.17	6.25
03/08/94	289	93.6%	325.7	1985	5.88	0.31	127	205	1.17	6.27
03/09/94	291	90.8%	325.6	1982	3.35	3.34	182	215	1.17	6.29
03/10/94	284	93.6%	323.1	1981	3.20	2.88	126	174	1.17	6.31
03/11/94	309	93.8%	327.5	2006	1.05	5.73	125	256	1.17	6.33
03/12/94	272	94.1%	326.3	2233	3.88	2.95	131	212	1.17	6.29
03/14/94	404	92.2%	325.5	1966	3.51	6.99	154	268	1.17	6.23
03/15/94	444	92.6%	324.1	2010	8.00	2.46	149	280	1.17	6.19
03/16/94	454	93.4%	326.6	1714	3.69	5.35	112	271	1.17	6.68
03/17/94	436	93.1%	324.2	1371	6.21	1.72	95	279	1.17	6.30
03/18/94	451	93.5%	330.1	1524	0.05	8.02	98	225	1.17	6.29
03/19/94	422	94.5%	330.1	1627	7.26	0.31	90	241	1.17	6.31
03/20/94	435	93.5%	334.1	1683	2.59	6.67	109	239	1.17	6.23
03/21/94	423	93.4%	332.4	1994	3.54	5.07	133	264	1.17	6.26
03/22/94	448	93.5%	334.8	2024	9.76	0.36	131	370	1.17	6.20
03/23/94	429	93.5%	335.6	1890	2.45	7.60	124	360	1.17	6.25
03/24/94	450	93.8%	331.8	2379	5.69	6.37	148	390	1.17	6.26
03/25/94	430	94.8%	332.7	2211	6.28	5.03	116	352	1.17	6.35
03/26/94	389	95.1%	332.0	1919	3.83	4.67	94	314	1.17	6.36

Appendix G - Data Summary For Major Process Variables

DATE	SLURRY pH B	SLURRY CARBONATE	TOTAL WATER TO FACILITY	AIR TO FAS	AIR TO ARS	TOTAL FGD DP	Number of Ciculation Pumps Running
	ph	mmole/l	gpm	scfm	scfm	Inches Water Column	
	AIC-138B	AIT-135	FI-264	FIC-344	FIC-345	PDI-115-01	
02/19/94	6.04	48.83	1763	10005	12496	1.79	5
02/20/94	6.04	47.13	1728	9998	12504	1.56	5
02/21/94	6.01	46.49	1739	9998	12504	1.84	5
02/22/94	6.04	49.30	1747	10000	12499	1.94	5
02/23/94	6.05	47.26	1749	9992	12505	1.98	5
02/24/94	6.14	44.63	1683	9992	12502	1.88	5
02/25/94	6.18	46.26	1629	9995	12505	1.73	6
02/26/94	6.09	43.05	1639	10002	12499	1.77	5
02/27/94	6.13	43.67	1474	10000	12444	1.62	6
02/28/94	6.18	51.14	1612	9998	12475	1.92	6
03/01/94	6.09	44.91	1679	9998	12503	1.88	5
03/02/94	6.11	42.85	1674	9998	12501	1.87	6
03/03/94	6.23	47.77	1698	9904	12427	1.97	6
03/04/94	6.20	43.66	1667	10004	12500	1.92	6
03/05/94	6.08	42.47	1667	10002	12502	2.03	6
03/06/94	6.28	47.12	1673	9999	12501	1.67	6
03/07/94	6.16	43.26	1720	10005	12495	1.93	6
03/08/94	6.16	41.81	1736	10003	12500	1.91	8
03/09/94	6.23	46.64	1735	10000	12500	1.95	9
03/10/94	6.26	46.78	1702	9960	12503	1.92	9
03/11/94	6.28	45.88	1748	10008	12438	2.17	8
03/12/94	6.25	43.57	1742	9995	12495	2.05	7
03/14/94	6.17	34.17	1833	9991	12498	5.24	6
03/15/94	6.10	47.55	1821	9993	11386	6.14	6
03/16/94	6.20	46.39	1666	9993	12503	6.11	7
03/17/94	6.21	43.68	1730	9993	12504	5.57	8
03/18/94	6.18	44.01	1725	9996	12503	5.78	7
03/19/94	6.23	47.01	1678	10004	12501	5.05	7
03/20/94	6.15	41.11	1699	9998	12502	5.27	7
03/21/94	6.19	45.22	1630	10003	12500	4.90	6
03/22/94	6.12	42.23	1880	10003	12500	6.03	5
03/23/94	6.17	42.42	1926	9998	12505	5.45	6
03/24/94	6.15	43.10	1920	10005	12496	5.73	7
03/25/94	6.23	49.43	1930	9998	12503	5.55	9
03/26/94	6.35	49.00	1870	9997	12499	4.56	9

Appendix G - Data Summary For Major Process Variables

DATE	TOTAL MW	% SO2 REMOVAL	FLUE GAS INLET FGD	SO2 INLET FGD	LIMESTONE FEED TO ABS	LIMESTONE FEED TO ABS	SO2 OUTLET	ABS. MAKEUP WATER FLOW	SLURRY DEN.	SLURRY pH A
	MW	%	F	ppm	tons/hr	tons/hr	ppm	gpm	GM/ML	ph
			TR-111	AIT-109	SIC-425A	SIC-425B	AR-126	FIC-127	AIC-134	AIC-138A
03/27/94	366	94.8%	334.0	1994	5.58	1.54	104	295	1.17	6.36
03/28/94	427	94.8%	336.2	2012	2.26	6.87	104	315	1.17	6.36
03/29/94	436	91.8%	335.5	1962	7.17	2.41	161	378	1.17	6.32
03/30/94	440	91.2%	336.2	1684	0.05	9.54	149	341	1.17	6.32
04/01/94	436	93.4%	336.5	1998	6.45	4.68	131	344	1.17	6.30
04/02/94	421	92.8%	336.2	1951	3.31	7.08	140	336	1.17	5.87
04/03/94	436	92.9%	337.7	2068	6.58	4.23	146	319	1.17	5.85
04/04/94	433	93.1%	340.0	1837	7.27	3.87	128	335	1.17	5.95
04/05/94	411	94.3%	338.2	2359	5.97	5.86	136	290	1.18	6.01
04/06/94	371	94.3%	332.6	2309	5.60	5.08	131	281	1.17	6.03
04/07/94	378	94.3%	337.0	2161	1.61	7.57	124	304	1.18	5.99
04/08/94	378	93.8%	341.1	1509	5.39	1.29	93	274	1.17	6.05
04/09/94	380	95.3%	343.0	1400	0.90	4.34	66	294	1.17	6.00
04/10/94	413	95.5%	337.9	1444	5.83	0.84	65	313	1.17	5.97
04/11/94	442	95.8%	335.8	1370	0.05	7.73	58	348	1.17	5.95
04/12/94	436	94.9%	336.7	1802	1.29	8.86	91	342	1.17	5.92
04/13/94	435	95.6%	335.2	1580	5.62	2.31	70	335	1.17	5.92
04/14/94	433	96.7%	341.3	1394	3.83	4.00	46	330	1.17	5.99
04/15/94	432	97.7%	338.8	1495	3.52	4.77	35	353	1.17	5.93
04/16/94	240	97.7%	304.5	1880	2.87	2.93	43	131	1.17	6.07
04/17/94	159	98.7%	298.8	2080	2.36	1.24	28	30	1.17	6.11
04/18/94	158	98.6%	305.0	1712	0.04	3.36	25	0	1.17	6.17
04/19/94	158	98.4%	298.0	2068	0.13	3.72	32	0	1.17	6.22
04/20/94	162	97.9%	301.8	2057	3.16	0.31	43	26	1.18	6.09
04/21/94	154	98.5%	294.8	2344	2.34	1.57	35	13	1.17	6.07
04/22/94	155	98.8%	298.2	2106	1.66	1.83	25	19	1.17	6.06
04/23/94	157	98.8%	296.0	2050	0.55	3.03	25	28	1.17	6.11
04/24/94	161	98.0%	283.3	1914	2.37	1.47	39	92	1.16	6.25
04/25/94	378	95.8%	320.6	2029	6.97	2.20	85	280	1.16	6.01
04/26/94	444	94.1%	339.3	2121	2.01	8.81	125	256	1.17	6.06
04/27/94	419	93.1%	336.2	2235	3.24	6.93	155	172	1.17	6.09
04/28/94	422	94.4%	336.4	2181	4.08	6.09	123	164	1.17	6.10
04/29/94	420	94.3%	337.2	2125	3.08	6.71	122	253	1.17	6.06
04/30/94	423	93.6%	341.6	2463	7.72	4.08	159	186	1.17	5.98
05/01/94	431	94.4%	351.3	2280	6.18	4.84	127	207	1.17	6.00

Appendix G - Data Summary For Major Process Variables

DATE	SLURRY pH B	SLURRY CARBONATE	TOTAL WATER TO FACILITY	AIR TO FAS	AIR TO ARS	TOTAL FGD DP	Number of Ciculation Pumps Running
	ph	mmole/l	gpm	scfm	scfm	Inches Water Column	
	AIC-138B	AIT-135	FI-264	FIC-344	FIC-345	PDI-115-01	
03/27/94	6.35	41.56	1865	9999	12498	3.97	8
03/28/94	6.35	47.19	1895	10002	12500	5.19	8
03/29/94	6.23	42.71	1923	9997	12500	5.67	7
03/30/94	6.38	50.12	1901	9982	12499	6.02	8
04/01/94	6.34	54.40	1955	9996	12505	6.24	7
04/02/94	5.85	43.20	1922	10001	12498	5.50	8
04/03/94	5.84	42.79	1932	9941	12503	5.84	8
04/04/94	5.96	53.21	1890	10003	12494	5.52	8
04/05/94	6.04	89.21	1810	9970	12501	4.89	8
04/06/94	6.05	81.65	1936	9992	12502	4.03	9
04/07/94	6.01	57.48	1942	9908	12496	4.55	9
04/08/94	6.06	48.99	1895	9998	12502	4.51	8
04/09/94	5.99	50.03	1914	9998	12498	4.54	8
04/10/94	5.98	50.35	1912	10004	12497	5.03	8
04/11/94	5.95	45.41	1882	10004	12499	6.03	6
04/12/94	5.90	46.77	1926	9995	12499	6.22	5
04/13/94	5.93	42.22	1914	9992	12496	5.94	5
04/14/94	5.99	48.15	1918	9959	12497	6.04	5
04/15/94	5.93	43.20	1948	10005	12496	5.84	5
04/16/94	6.07	43.95	1722	9956	12501	2.41	5
04/17/94	6.11	40.33	1668	10004	12504	0.20	5
04/18/94	6.16	38.64	1687	10009	12494	0.14	5
04/19/94	6.08	35.78	1640	10006	12498	0.22	5
04/20/94	6.04	31.35	1789	9991	12503	0.28	8
04/21/94	6.04	30.88	1838	10004	12505	0.31	9
04/22/94	6.03	29.70	1818	10000	12502	0.39	8
04/23/94	6.09	31.20	1810	10000	12497	0.32	9
04/24/94	6.20	35.07	1864	10001	12497	1.28	9
04/25/94	5.91	37.17	1938	9997	12500	4.74	10
04/26/94	5.91	41.60	1849	9995	12502	5.59	9
04/27/94	5.95	45.46	1767	9940	12490	4.75	9
04/28/94	5.95	48.60	1759	10011	12496	4.97	9
04/29/94	5.93	44.99	1858	10002	12498	4.72	9
04/30/94	5.84	41.77	1736	9994	12503	4.92	9
05/01/94	5.86	43.47	1749	9994	12500	4.92	9

Appendix G - Data Summary For Major Process Variables

DATE	TOTAL MW	% SO2 REMOVAL	FLUE GAS INLET FGD	SO2 INLET FGD	LIMESTONE FEED TO ABS	LIMESTONE FEED TO ABS	SO2 OUTLET	ABS. MAKEUP WATER FLOW	SLURRY DEN.	SLURRY pH A
	MW	%	F	ppm	tons/hr	tons/hr	ppm	gpm	GM/ML	ph
			TR-111	AIT-109	SIC-425A	SIC-425B	AR-126	FIC-127	AIC-134	AIC-138A
05/02/94	418	93.6%	346.2	2193	4.21	6.20	140	163	1.17	5.96
05/03/94	427	94.4%	339.3	2223	4.13	6.28	124	133	1.17	5.98
05/04/94	423	93.6%	338.4	2178	4.41	5.86	140	177	1.17	5.91
05/05/94	427	94.2%	337.1	2145	6.15	4.18	125	142	1.17	5.99
05/06/94	408	94.2%	334.9	2112	0.05	9.58	122	186	1.18	5.96
05/07/94	400	94.8%	335.9	2126	7.12	2.52	111	273	1.17	6.00
05/08/94	347	95.6%	338.1	2134	1.66	6.86	95	253	1.17	6.06
05/09/94	359	94.7%	338.2	2165	3.99	4.58	115	218	1.17	6.04
05/10/94	329	95.8%	336.9	2074	3.48	3.79	87	295	1.17	6.12
05/11/94	306	95.7%	337.7	1953	4.61	1.36	85	128	1.17	5.69
05/12/94	302	95.1%	317.2	1572	0.05	5.23	78	143	1.16	7.13
05/13/94	307	#N/A	76.8	-10	0.04	0.31	#N/A	26	1.00	11.68
05/14/94	311	#N/A	75.2	-23	0.04	0.31	#N/A	0	1.00	11.12
05/17/94	439	#N/A	57.4	-35	0.04	0.31	#N/A	0	1.00	9.04
05/22/94	431	#N/A	94.6	-14	0.03	0.31	#N/A	97	1.00	8.75
05/23/94	439	94.3%	232.7	1068	3.46	1.41	61	24	1.05	7.27
05/24/94	463	94.3%	340.0	1952	4.23	5.26	111	324	1.16	8.00
05/25/94	466	93.8%	337.7	1987	2.31	7.80	123	211	1.18	7.96
05/26/94	463	93.3%	332.4	2100	6.72	3.99	141	291	1.18	6.67
05/27/94	450	94.0%	334.6	2148	8.68	2.07	129	254	1.17	6.12
05/28/94	426	94.1%	332.5	2133	1.49	8.79	126	259	1.16	6.10
05/29/94	391	95.4%	323.8	2066	7.92	1.25	95	215	1.16	6.09
05/30/94	148	98.5%	295.1	1946	0.04	4.14	29	0	1.15	5.70
05/31/94	151	98.7%	299.9	2025	0.04	4.20	27	41	1.15	7.03
06/01/94	160	98.7%	300.1	2062	2.01	1.86	26	2	1.16	6.88
06/02/94	202	97.3%	283.1	2031	2.91	2.52	54	93	1.16	7.12
06/03/94	433	94.1%	327.7	2071	7.05	3.39	123	249	1.17	6.69
06/04/94	440	95.1%	329.8	2693	3.53	9.83	132	332	1.17	6.57
06/05/94	342	94.5%	315.5	2520	9.32	1.50	138	257	1.18	6.84
06/06/94	467	91.4%	330.4	2675	6.14	9.01	231	301	1.19	6.92
06/07/94	454	93.9%	327.8	2666	3.63	9.80	164	276	1.19	6.96
06/08/94	463	95.0%	327.0	2799	7.96	5.84	141	266	1.19	6.99
06/09/94	451	93.2%	328.8	2737	4.91	8.42	185	274	1.19	7.12
06/10/94	449	93.8%	329.0	2730	4.62	7.69	170	281	1.19	6.88
06/11/94	448	94.6%	317.1	2739	5.67	7.93	148	280	1.19	6.62

Appendix G - Data Summary For Major Process Variables

DATE	SLURRY pH B	SLURRY CARBONATE	TOTAL WATER TO FACILITY	AIR TO FAS	AIR TO ARS	TOTAL FGD DP	Number of Ciculation Pumps Running
	ph	mmole/l	gpm	scfm	scfm	Inches Water Column	
	AIC-138B	AIT-135	FI-264	FIC-344	FIC-345	PDI-115-01	
05/02/94	5.84	40.02	1752	9994	12502	4.65	9
05/03/94	5.85	43.82	1733	9997	12497	4.86	8
05/04/94	5.76	38.15	1776	9999	12500	4.82	7
05/05/94	5.84	43.84	1741	9963	12476	4.92	7
05/06/94	5.82	42.16	1763	10001	12492	4.54	6
05/07/94	5.86	45.47	1828	10001	12498	4.30	4
05/08/94	5.93	47.40	1782	9999	12503	3.53	0
05/09/94	5.90	44.96	1775	10000	12503	3.40	10
05/10/94	6.00	45.54	1826	10002	12494	3.22	0
05/11/94	5.70	43.84	1712	10009	12498	2.08	0
05/12/94	6.39	66.92	1689	10007	12502	2.08	6
05/13/94	9.09	24.74	1569	6290	7378	3.94	10
05/14/94	9.31	5.37	1462	5997	6996	4.59	10
05/17/94	10.61	-0.01	1420	0	124	5.55	10
05/22/94	9.09	0.24	1464	0	0	5.77	10
05/23/94	7.31	36.68	1406	8024	8120	5.46	9
05/24/94	6.47	48.89	1556	10000	9997	5.89	8
05/25/94	6.26	43.02	1624	9967	9994	5.99	5
05/26/94	7.38	42.29	1612	10016	9994	5.83	5
05/27/94	5.41	46.35	1603	9999	9997	5.65	5
05/28/94	7.58	40.68	1495	9997	10004	4.99	5
05/29/94	5.99	39.70	1455	10002	9999	4.85	9
05/30/94	6.03	42.09	1061	10183	10195	1.66	10
05/31/94	6.02	39.22	1262	10299	10302	1.19	9
06/01/94	6.06	37.48	1259	10307	10294	1.26	9
06/02/94	5.91	42.60	1385	10292	10300	2.40	10
06/03/94	5.78	44.07	1597	10287	10309	5.13	11
06/04/94	5.74	52.11	1624	10295	10301	5.43	8
06/05/94	5.84	49.29	1520	10112	10108	4.91	8
06/06/94	5.78	51.51	1628	10004	9999	6.58	9
06/07/94	5.75	51.19	1616	10000	12956	6.72	10
06/08/94	5.74	51.85	1596	10000	13617	6.75	11
06/09/94	5.76	51.66	1577	9994	13585	5.70	10
06/10/94	5.88	65.64	1599	10000	13471	5.77	10
06/11/94	5.89	64.38	1574	9996	13441	6.10	10

Appendix G - Data Summary For Major Process Variables

DATE	TOTAL MW	% SO2 REMOVAL	FLUE GAS INLET FGD	SO2 INLET FGD	LIMESTONE FEED TO ABS	LIMESTONE FEED TO ABS	SO2 OUTLET	ABS. MAKEUP WATER FLOW	SLURRY DEN.	SLURRY pH A
	MW	%	F	ppm	tons/hr	tons/hr	ppm	gpm	GM/ML	ph
			TR-111	AIT-109	SIC-425A	SIC-425B	AR-126	FIC-127	AIC-134	AIC-138A
06/12/94	463	94.7%	333.0	2797	6.82	7.05	149	301	1.19	6.58
06/13/94	441	95.2%	330.4	2781	6.08	6.53	133	251	1.19	6.55
06/14/94	408	96.1%	334.5	2309	5.57	4.84	90	238	1.19	6.68
06/15/94	480	93.1%	348.1	2271	2.87	8.67	158	273	1.18	6.58
06/16/94	494	93.3%	349.9	2273	4.77	8.14	152	305	1.18	5.94
06/17/94	478	93.8%	349.0	2228	9.54	1.90	139	256	1.18	5.57
06/18/94	483	94.3%	349.3	2157	1.70	10.06	122	261	1.17	5.57
06/19/94	443	94.8%	343.7	2127	8.12	2.46	111	298	1.17	5.54
06/20/94	442	94.3%	347.5	2154	0.62	10.68	123	281	1.17	5.57
06/21/94	439	93.3%	345.3	2119	3.73	6.88	142	332	1.17	5.49
06/22/94	458	92.9%	347.1	2169	5.14	5.90	155	336	1.17	5.51
06/23/94	458	93.5%	341.9	2151	3.38	8.14	140	330	1.17	5.55
06/24/94	429	95.0%	334.9	2435	9.29	3.57	122	347	1.18	5.64
06/25/94	431	94.0%	341.7	2659	5.28	8.17	160	343	1.18	5.73
06/26/94	416	95.1%	341.4	2723	3.79	9.28	134	309	1.18	5.72
06/27/94	428	95.8%	339.0	2709	8.25	5.12	115	336	1.18	5.77
06/28/94	445	94.7%	340.7	2716	10.33	4.31	143	343	1.19	5.80
06/29/94	441	95.4%	339.6	2776	5.16	8.51	129	320	1.18	5.82
06/30/94	442	93.8%	341.2	2844	4.39	8.12	176	317	1.19	5.82
07/01/94	437	94.9%	343.3	2877	8.06	5.63	148	338	1.18	5.79
07/02/94	383	95.0%	338.1	2575	5.22	5.69	130	329	1.17	5.77
07/03/94	403	94.4%	346.3	2566	8.98	3.22	144	329	1.17	5.70
07/04/94	449	93.2%	347.7	2501	4.59	9.28	171	360	1.17	5.70
07/05/94	456	95.1%	348.1	2542	8.55	5.41	125	402	1.17	5.76
07/06/94	482	92.4%	346.2	2547	6.06	7.19	195	285	1.17	5.81
07/07/94	462	94.4%	344.3	2220	1.04	11.28	124	355	1.17	5.80
07/08/94	445	93.9%	342.0	2140	7.86	3.82	130	382	1.17	5.86
07/09/94	429	93.7%	347.5	2477	6.77	6.87	157	332	1.17	5.87
07/10/94	343	94.7%	345.5	2212	3.25	7.35	118	319	1.17	5.89
07/11/94	425	94.1%	347.8	2240	0.82	12.91	132	348	1.17	5.92
07/12/94	444	92.6%	350.9	2262	6.20	6.98	167	357	1.17	5.82
07/13/94	444	92.9%	346.4	2220	9.11	3.75	157	365	1.17	5.85
07/14/94	456	93.2%	347.4	2165	5.77	6.98	146	353	1.16	5.81
07/15/94	434	93.3%	344.3	2155	9.50	3.41	143	340	1.16	5.88
07/16/94	451	92.7%	342.7	2509	7.74	7.78	184	375	1.16	5.92

Appendix G - Data Summary For Major Process Variables

DATE	SLURRY pH B	SLURRY CARBONATE	TOTAL WATER TO FACILITY	AIR TO FAS	AIR TO ARS	TOTAL FGD DP	Number of Ciculation Pumps Running
	ph	mmole/l	gpm	scfm	scfm	Inches Water Column	
	AIC-138B	AIT-135	FI-264	FIC-344	FIC-345	PDI-115-01	
06/12/94	5.89	63.16	1597	9999	13464	6.86	10
06/13/94	5.93	64.48	1601	10004	13264	6.70	10
06/14/94	6.09	38.17	1539	10010	13228	5.75	10
06/15/94	5.78	49.36	1579	9983	13325	7.14	9
06/16/94	5.97	65.84	1642	9987	13332	7.52	9
06/17/94	5.98	77.34	1582	10012	13397	6.98	10
06/18/94	5.95	79.33	1600	10002	13446	7.13	10
06/19/94	5.92	71.90	1567	10005	13593	6.32	10
06/20/94	5.97	73.55	1539	10002	12997	6.19	9
06/21/94	5.88	77.88	1570	10001	12998	6.09	10
06/22/94	5.91	53.26	1600	9995	13000	6.68	11
06/23/94	5.97	43.52	1624	9995	13003	6.79	12
06/24/94	6.05	62.65	1596	10004	12994	5.94	10
06/25/94	6.13	87.43	1635	10009	12993	5.83	8
06/26/94	6.13	78.08	1609	10005	12989	5.81	10
06/27/94	6.17	93.43	1618	10004	12997	5.64	10
06/28/94	6.20	98.09	1641	10011	12997	6.03	9
06/29/94	6.22	101.88	1643	9988	13008	5.74	9
06/30/94	6.21	90.50	1601	9993	13004	5.05	10
07/01/94	6.20	52.97	1585	10003	13000	5.48	10
07/02/94	6.17	65.29	1527	10003	13005	4.52	9
07/03/94	6.11	40.67	1507	10002	13004	4.76	10
07/04/94	6.13	45.08	1581	9998	13003	5.74	11
07/05/94	6.15	43.63	1588	10008	12999	6.05	9
07/06/94	6.20	51.25	1526	9968	13033	6.56	10
07/07/94	6.07	44.22	1538	9998	12514	6.08	10
07/08/94	5.84	49.69	1595	10002	12500	5.80	10
07/09/94	5.86	53.92	1531	10008	12497	5.65	10
07/10/94	5.89	54.65	1534	10069	12455	3.64	9
07/11/94	5.92	67.48	1515	10002	12067	5.18	10
07/12/94	5.83	48.64	1538	10000	12497	5.72	10
07/13/94	5.86	49.08	1523	10002	12495	5.64	9
07/14/94	5.83	43.64	1517	9992	12499	5.98	10
07/15/94	5.88	50.16	1521	9998	12497	5.27	10
07/16/94	5.88	58.38	1548	9995	12502	5.75	9

Appendix G - Data Summary For Major Process Variables

DATE	TOTAL MW	% SO2 REMOVAL	FLUE GAS INLET FGD	SO2 INLET FGD	LIMESTONE FEED TO ABS	LIMESTONE FEED TO ABS	SO2 OUTLET	ABS. MAKEUP WATER FLOW	SLURRY DEN.	SLURRY pH A
	MW	%	F	ppm	tons/hr	tons/hr	ppm	gpm	GM/ML	ph
			TR-111	AIT-109	SIC-425A	SIC-425B	AR-126	FIC-127	AIC-134	AIC-138A
07/17/94	444	93.4%	342.5	2457	6.99	7.19	163	315	1.16	5.96
07/18/94	454	93.5%	349.4	1588	4.72	4.91	103	350	1.16	5.96
07/19/94	465	93.2%	342.0	2229	9.43	3.62	151	426	1.17	5.80
07/20/94	429	93.7%	338.7	2134	5.55	6.88	134	394	1.17	5.93
07/21/94	442	94.3%	340.1	1896	0.03	11.32	108	434	1.16	6.01
07/22/94	449	93.6%	339.4	1623	0.03	9.31	104	426	1.16	5.99
07/23/94	445	92.9%	342.8	1572	5.84	3.74	111	417	1.18	5.98
07/24/94	451	92.1%	342.2	1609	7.92	2.33	127	392	1.19	5.92
07/25/94	462	91.8%	340.4	1610	0.04	9.09	133	415	1.19	5.81
07/26/94	449	92.4%	339.9	1563	3.28	4.38	118	416	1.19	5.82
07/27/94	445	92.5%	338.4	1538	6.05	1.94	115	361	1.19	5.82
07/28/94	438	90.8%	340.0	1542	1.86	6.64	142	361	1.19	5.92
07/29/94	319	95.6%	325.4	1520	4.59	1.43	66	278	1.15	6.27
07/30/94	154	99.0%	304.1	1537	0.04	3.19	16	48	1.19	6.25
07/31/94	162	99.3%	304.5	1538	0.03	3.60	11	63	1.19	6.29
08/01/94	167	99.3%	304.3	1543	0.60	2.94	10	34	1.19	6.44
08/02/94	165	99.4%	303.0	1531	3.00	0.31	9	95	1.18	6.57
08/03/94	164	98.8%	301.6	1531	3.27	0.32	19	45	1.17	6.42
08/04/94	152	97.6%	300.5	1514	3.22	0.31	36	20	1.17	6.44
08/05/94	163	98.8%	301.6	1548	0.92	2.80	19	94	1.17	6.43
08/06/94	164	98.5%	231.5	1181	0.04	4.24	18	115	1.19	6.68
08/08/94	175	97.6%	259.3	1308	4.80	0.31	31	167	1.19	6.72
08/09/94	373	93.9%	318.7	1539	2.12	6.17	94	325	1.19	6.73
08/10/94	430	93.6%	330.1	1576	6.60	2.18	101	359	1.19	6.60
08/11/94	446	94.6%	333.1	1593	1.47	8.01	87	336	1.19	6.63
08/12/94	455	94.6%	333.3	1657	5.99	3.66	89	364	1.19	6.63
08/13/94	450	93.1%	332.7	1588	2.52	6.89	110	355	1.19	6.60
08/14/94	468	93.9%	333.3	1601	8.80	1.72	98	366	1.19	6.68
08/15/94	493	94.0%	334.3	1589	0.04	11.48	95	464	1.19	6.65
08/16/94	452	95.6%	335.8	1555	4.34	5.59	68	342	1.19	6.69
08/17/94	497	96.0%	340.1	1604	2.15	8.80	64	377	1.19	6.61
08/18/94	507	97.0%	338.2	1605	10.96	0.31	49	380	1.19	6.66
08/22/94	429	93.5%	335.7	1494	0.04	7.83	97	350	1.19	6.57
08/23/94	397	95.4%	325.0	1479	1.30	6.89	67	316	1.19	6.59
08/24/94	384	96.9%	332.8	1536	6.91	0.39	48	340	1.19	6.55

Appendix G - Data Summary For Major Process Variables

DATE	SLURRY pH B	SLURRY CARBONATE	TOTAL WATER TO FACILITY	AIR TO FAS	AIR TO ARS	TOTAL FGD DP	Number of Ciculation Pumps Running
	ph	mmole/l	gpm	scfm	scfm	Inches Water Column	
	AIC-138B	AIT-135	FI-264	FIC-344	FIC-345	PDI-115-01	
07/17/94	5.94	64.70	1516	10008	12500	5.69	8
07/18/94	5.94	52.60	1517	9944	12442	5.48	9
07/19/94	5.81	46.47	1611	9997	12497	5.94	9
07/20/94	5.93	45.30	1538	10009	12494	5.36	9
07/21/94	6.01	53.53	1568	9877	12382	5.42	10
07/22/94	5.99	44.22	1563	10004	12501	5.27	10
07/23/94	5.99	43.36	1544	9998	12505	5.32	8
07/24/94	5.93	41.09	1536	8645	8772	5.57	5
07/25/94	5.82	33.70	1602	5733	6765	5.81	6
07/26/94	5.82	32.82	1546	5009	7503	5.65	7
07/27/94	5.83	31.26	1529	5021	7510	5.68	7
07/28/94	5.86	32.48	1518	5134	7490	4.98	7
07/29/94	6.72	36.44	1423	5014	7420	3.22	5
07/30/94	6.08	33.04	1207	5009	4998	0.50	5
07/31/94	6.06	32.70	1170	4998	5003	0.64	5
08/01/94	6.18	41.70	1162	7012	7006	0.70	8
08/02/94	6.29	50.74	1245	7708	7695	0.75	8
08/03/94	6.22	40.68	1158	7627	7623	0.77	8
08/04/94	6.20	31.00	1118	7693	7704	0.60	9
08/05/94	6.12	32.44	1190	7984	7997	0.74	10
08/06/94	6.32	44.29	1237	8498	8507	2.22	10
08/08/94	6.31	41.62	1280	8502	8508	2.71	9
08/09/94	6.25	54.70	1458	8450	8439	4.55	8
08/10/94	6.18	49.20	1547	7492	7504	5.29	9
08/11/94	6.23	51.43	1538	7495	7494	6.10	10
08/12/94	6.22	50.79	1541	7501	7499	6.16	11
08/13/94	6.24	44.31	1544	7497	7497	5.75	11
08/14/94	6.31	69.84	1489	7505	7500	5.74	8
08/15/94	6.32	75.30	1306	7579	7446	6.64	9
08/16/94	6.33	76.00	1325	7503	7500	6.14	10
08/17/94	6.32	74.71	1382	7499	7507	7.08	10
08/18/94	6.41	101.20	1404	8528	8483	7.17	8
08/22/94	6.47	53.33	1320	8502	8497	4.90	8
08/23/94	6.50	52.00	1273	8490	8508	4.47	7
08/24/94	6.48	51.17	1287	8498	8500	4.32	8

Appendix G - Data Summary For Major Process Variables

DATE	TOTAL MW	% SO2 REMOVAL	FLUE GAS INLET FGD	SO2 INLET FGD	LIMESTONE FEED TO ABS	LIMESTONE FEED TO ABS	SO2 OUTLET	ABS. MAKEUP WATER FLOW	SLURRY DEN.	SLURRY pH A
	MW	%	F	ppm	tons/hr	tons/hr	ppm	gpm	GM/ML	ph
			TR-111	AIT-109	SIC-425A	SIC-425B	AR-126	FIC-127	AIC-134	AIC-138A
08/25/94	464	95.8%	338.1	1572	2.17	7.40	66	338	1.19	6.57
08/26/94	440	93.4%	336.3	1635	4.40	4.88	108	324	1.19	6.47
08/27/94	442	92.9%	338.9	1586	3.81	5.29	113	332	1.18	6.51
08/28/94	379	93.8%	330.3	1532	5.52	1.71	94	318	1.18	6.52
08/29/94	458	92.8%	335.4	1570	0.04	9.16	113	363	1.18	6.53
08/30/94	457	93.8%	335.3	1560	2.24	6.90	96	360	1.17	6.49
08/31/94	435	95.4%	334.8	1550	3.04	4.93	71	354	1.17	6.54
09/01/94	454	94.6%	331.7	2076	5.17	5.87	112	378	1.17	6.44
09/02/94	450	93.8%	333.9	2140	5.42	6.41	132	338	1.17	6.43
09/03/94	438	93.5%	333.0	2165	0.64	11.05	141	376	1.17	6.49
09/04/94	370	94.7%	328.6	2101	9.57	0.31	111	347	1.16	6.58
09/05/94	410	93.9%	323.9	2058	3.83	7.61	125	335	1.17	6.65
09/06/94	155	98.0%	273.8	1657	1.62	3.57	34	93	1.16	7.05
09/07/94	421	94.0%	330.1	2087	4.48	7.18	126	251	1.17	7.49
09/08/94	451	92.9%	335.1	2103	4.12	7.96	150	240	1.17	7.66
09/09/94	459	93.5%	335.0	2109	5.58	6.87	138	283	1.18	7.25
09/10/94	466	94.7%	332.6	1996	5.79	6.12	107	249	1.19	8.28
09/11/94	461	96.0%	336.5	1842	2.72	8.76	73	244	1.19	6.63
09/12/94	462	92.8%	337.9	1924	5.91	4.80	139	273	1.19	5.30
09/13/94	439	94.8%	336.7	1819	0.04	10.42	94	296	1.19	5.38
09/16/94	453	92.9%	347.9	1852	3.01	7.98	132	300	1.18	5.50
09/17/94	422	94.4%	345.6	1929	8.45	2.01	108	287	1.19	5.49
09/18/94	398	95.5%	345.1	1891	5.93	4.26	86	311	1.19	5.46
09/19/94	458	94.8%	348.8	1959	3.31	8.30	102	335	1.19	5.44
09/20/94	449	94.4%	343.5	1809	4.69	5.77	101	324	1.19	5.78
09/21/94	452	94.7%	340.9	1938	7.17	3.88	102	329	1.19	5.88
09/22/94	434	94.6%	338.7	1977	3.96	7.48	107	337	1.19	5.77
09/23/94	483	94.9%	343.0	1954	4.64	7.62	99	348	1.19	6.16
09/24/94	487	95.6%	342.3	1924	8.74	2.95	85	354	1.19	6.26
09/25/94	480	95.6%	340.3	1697	4.90	6.75	75	324	1.19	6.13
09/26/94	469	95.2%	338.3	1635	4.28	6.04	79	300	1.19	5.95
09/27/94	454	95.8%	339.5	1855	0.49	11.70	79	334	1.19	5.84
09/28/94	162	98.8%	300.2	1684	3.48	0.70	21	79	1.19	5.80
09/29/94	154	99.4%	294.5	1759	1.19	3.55	11	36	1.19	5.79
09/30/94	155	98.7%	265.2	1583	2.13	2.16	21	113	1.19	5.79

Appendix G - Data Summary For Major Process Variables

DATE	SLURRY pH B	SLURRY CARBONATE	TOTAL WATER TO FACILITY	AIR TO FAS	AIR TO ARS	TOTAL FGD DP	Number of Ciculation Pumps Running
	ph	mmole/l	gpm	scfm	scfm	Inches Water Column	
	AIC-138B	AIT-135	FI-264	FIC-344	FIC-345	PDI-115-01	
08/25/94	6.48	75.78	1330	8501	8497	5.98	9
08/26/94	6.40	47.62	1317	8500	8499	5.22	9
08/27/94	6.43	50.57	1308	8498	8497	5.06	8
08/28/94	6.43	49.23	1226	8498	8507	3.86	9
08/29/94	6.42	51.72	1336	8501	8500	5.25	9
08/30/94	6.37	43.65	1322	8509	8497	5.61	8
08/31/94	6.40	45.12	1286	8503	8494	5.04	9
09/01/94	6.29	45.29	1317	8507	8490	5.01	6
09/02/94	6.29	47.04	1321	8503	8497	5.49	8
09/03/94	6.32	46.56	1344	8506	8488	5.24	9
09/04/94	6.39	48.85	1245	8489	8504	3.80	9
09/05/94	6.43	44.98	1291	8498	8498	5.24	9
09/06/94	6.65	47.85	904	8506	8503	1.68	9
09/07/94	6.46	43.34	1199	8497	8501	4.88	8
09/08/94	6.25	42.06	1218	8500	8498	5.51	9
09/09/94	6.40	41.49	1230	8504	8494	5.72	8
09/10/94	6.38	41.32	1215	8500	8498	6.00	9
09/11/94	5.85	38.27	1209	8014	7994	5.93	10
09/12/94	5.22	34.62	1238	7499	7502	5.51	11
09/13/94	5.28	35.41	1216	7498	7499	5.35	8
09/16/94	5.42	50.07	1210	7485	7500	5.26	9
09/17/94	5.41	51.46	1183	7506	7508	5.13	10
09/18/94	5.39	48.94	1178	7498	7498	5.02	10
09/19/94	5.37	51.52	1260	7503	7494	6.32	11
09/20/94	5.52	75.51	1228	7499	7499	5.35	8
09/21/94	5.48	72.41	1237	7499	7505	5.67	9
09/22/94	5.39	53.68	1212	7501	7501	5.76	10
09/23/94	5.47	74.77	1238	7502	7503	6.73	7
09/24/94	5.47	75.47	1258	7505	7496	7.01	8
09/25/94	5.56	100.97	1253	7498	7503	5.95	6
09/26/94	5.54	102.09	1219	7503	7501	6.08	10
09/27/94	5.50	99.95	1215	7496	7505	6.31	10
09/28/94	5.51	59.76	850	4375	3957	1.79	10
09/29/94	5.49	54.10	765	4109	3642	1.61	10
09/30/94	5.54	46.26	1117	8009	8007	2.43	10

Appendix G - Data Summary For Major Process Variables

DATE	TOTAL MW	% SO2 REMOVAL	FLUE GAS INLET FGD	SO2 INLET FGD	LIMESTONE FEED TO ABS	LIMESTONE FEED TO ABS	SO2 OUTLET	ABS. MAKEUP WATER FLOW	SLURRY DEN.	SLURRY pH A
	MW	%	F	ppm	tons/hr	tons/hr	ppm	gpm	GM/ML	ph
			TR-111	AIT-109	SIC-425A	SIC-425B	AR-126	FIC-127	AIC-134	AIC-138A
10/01/94	156	98.7%	265.3	1583	2.17	2.13	21	115	1.19	5.80
10/02/94	281	97.9%	329.0	1913	3.89	4.16	40	125	1.19	5.93
10/03/94	281	97.9%	329.0	1913	3.89	4.16	40	125	1.19	5.93
10/04/94	288	98.0%	336.3	1968	2.38	4.83	40	145	1.19	5.91
10/05/94	281	97.9%	329.0	1913	3.89	4.16	40	125	1.19	5.93
10/06/94	292	96.9%	321.9	1968	3.23	3.32	62	71	1.19	5.82
10/07/94	262	96.9%	317.9	1683	6.53	0.47	53	63	1.19	5.93
10/13/94	156	98.3%	228.4	1148	0.32	2.11	20	15	1.15	7.61
10/14/94	113	99.2%	292.2	1665	0.63	2.69	13	17	1.18	6.03
10/15/94	142	98.8%	301.3	1739	0.04	4.01	21	0	1.18	5.31
10/16/94	159	98.9%	308.6	1813	2.70	2.36	19	0	1.18	6.67
10/17/94	160	98.2%	309.8	1823	4.02	1.05	33	9	1.18	5.55
10/18/94	163	98.3%	310.1	1812	0.99	3.51	30	16	1.17	5.62
10/19/94	162	98.8%	307.5	1768	5.27	0.31	21	39	1.16	5.58
10/20/94	426	99.0%	307.7	1863	5.55	0.31	19	56	1.17	5.63
10/21/94	509	98.9%	308.4	1852	4.58	1.11	20	72	1.17	5.69
10/22/94	229	98.9%	308.4	1835	0.05	5.29	20	53	1.17	5.68
10/23/94	162	99.0%	308.6	1937	1.74	3.19	18	62	1.17	5.78
10/24/94	162	99.1%	307.6	1942	1.24	4.19	18	55	1.17	5.70
10/25/94	162	98.7%	309.2	1942	1.59	3.91	26	74	1.17	5.71
10/26/94	163	98.8%	309.2	1966	4.40	0.31	23	27	1.16	5.74
10/27/94	163	98.6%	308.1	1899	4.29	0.53	27	16	1.17	5.77
10/28/94	163	98.8%	309.2	1966	4.40	0.31	23	27	1.16	5.74
10/29/94	158	98.6%	308.5	1925	0.05	5.87	27	77	1.17	5.71
10/30/94	164	98.2%	305.6	1935	4.76	0.31	35	65	1.17	5.80
10/31/94	163	96.9%	249.1	1767	4.09	0.91	54	99	1.17	5.75
11/01/94	155	98.4%	300.4	2001	0.05	5.74	31	78	1.17	5.90
11/02/94	150	98.2%	284.8	1926	2.95	2.26	35	116	1.17	5.91
11/03/94	171	97.3%	289.4	1944	3.71	1.59	53	106	1.17	5.93
11/04/94	319	92.4%	308.2	2025	4.42	4.84	153	199	1.17	5.80
11/05/94	185	97.8%	303.0	1400	0.16	5.10	31	92	1.17	6.08
11/06/94	129	99.7%	297.8	1619	2.75	0.31	5	15	1.17	6.19
11/07/94	206	97.4%	299.6	1697	3.37	2.47	44	105	1.17	5.97
11/08/94	453	94.4%	317.0	2230	2.56	11.19	125	236	1.17	5.75
11/09/94	432	94.6%	314.6	2207	6.88	6.25	120	258	1.17	5.78

Appendix G - Data Summary For Major Process Variables

DATE	SLURRY pH B	SLURRY CARBONATE	TOTAL WATER TO FACILITY	AIR TO FAS	AIR TO ARS	TOTAL FGD DP	Number of Ciculation Pumps Running
	ph	mmole/l	gpm	scfm	scfm	Inches Water Column	
	AIC-138B	AIT-135	FI-264	FIC-344	FIC-345	PDI-115-01	
10/01/94	5.54	46.25	1117	8010	8007	2.43	9
10/02/94	5.53	62.94	1185	7494	7507	2.28	6
10/03/94	5.53	62.94	1185	7494	7507	2.28	3
10/04/94	5.56	67.11	1154	7507	7510	2.39	5
10/05/94	5.53	62.94	1185	7494	7507	2.28	5
10/06/94	5.46	54.16	1149	7511	7500	2.13	5
10/07/94	5.48	59.03	1144	7501	7500	1.72	5
10/13/94	6.10	64.90	888	4504	4501	0.81	5
10/14/94	5.99	48.03	940	4500	4506	0.96	7
10/15/94	5.70	36.95	936	4506	4500	1.21	7
10/16/94	5.63	38.97	977	4491	4506	1.34	6
10/17/94	5.45	35.48	1050	4512	4502	1.40	6
10/18/94	5.49	36.82	1031	4500	4499	1.42	6
10/19/94	5.49	33.81	1010	4499	4502	1.39	6
10/20/94	5.46	31.57	1064	4499	4498	1.40	5
10/21/94	5.52	37.23	1090	4498	4501	1.37	5
10/22/94	5.56	43.40	1088	4497	4501	1.37	5
10/23/94	5.57	47.63	1076	4497	4500	1.35	6
10/24/94	5.55	43.51	1053	4505	4498	1.34	5
10/25/94	5.55	42.08	1089	4498	4500	1.39	5
10/26/94	5.58	44.61	1040	4502	4499	1.39	5
10/27/94	5.63	47.67	1012	4504	4499	1.37	5
10/28/94	5.58	44.61	1040	4502	4499	1.39	5
10/29/94	5.61	45.16	1096	4495	4501	1.30	6
10/30/94	5.64	42.09	1055	4502	4498	1.48	7
10/31/94	5.64	44.37	1111	7796	7914	2.37	6
11/01/94	5.78	45.21	815	7997	7994	1.28	5
11/02/94	5.81	48.75	836	8012	7998	1.59	5
11/03/94	5.84	47.83	882	7993	8005	2.18	9
11/04/94	5.70	43.22	1045	7998	7997	3.46	9
11/05/94	5.98	40.56	893	8009	7994	1.76	9
11/06/94	6.29	-50.07	773	7973	7985	1.08	9
11/07/94	5.86	-50.07	880	8005	7993	2.41	9
11/08/94	5.63	14.96	1124	8001	8000	5.68	10
11/09/94	5.66	44.04	1173	8005	8020	5.32	10

Appendix G - Data Summary For Major Process Variables

DATE	TOTAL MW	% SO2 REMOVAL	FLUE GAS INLET FGD	SO2 INLET FGD	LIMESTONE FEED TO ABS	LIMESTONE FEED TO ABS	SO2 OUTLET	ABS. MAKEUP WATER FLOW	SLURRY DEN.	SLURRY pH A
	MW	%	F	ppm	tons/hr	tons/hr	ppm	gpm	GM/ML	ph
			TR-111	AIT-109	SIC-425A	SIC-425B	AR-126	FIC-127	AIC-134	AIC-138A
11/10/94	436	92.9%	314.7	2225	3.73	9.41	158	237	1.17	5.76
11/11/94	458	92.0%	316.4	2211	9.87	3.25	177	281	1.16	5.76
11/12/94	472	92.9%	318.1	2192	3.20	10.52	156	272	1.16	5.76
11/13/94	466	93.3%	321.1	2148	9.04	4.62	144	289	1.16	5.74
11/14/94	484	93.3%	321.3	2191	0.31	13.80	147	272	1.16	5.77
11/15/94	468	93.5%	318.1	2169	8.60	4.56	141	276	1.16	5.74
11/17/94	470	93.7%	319.0	2501	9.59	5.98	157	279	1.17	5.72
11/18/94	504	92.5%	320.0	2410	1.89	13.73	180	249	1.16	5.78
11/21/94	435	94.5%	313.0	2190	1.11	10.97	120	240	1.16	5.84
11/22/94	454	94.2%	315.4	2182	1.53	11.12	127	266	1.16	5.85
11/23/94	486	93.1%	316.4	2194	6.21	7.52	152	272	1.16	5.82
11/24/94	475	93.6%	319.7	2167	9.78	3.87	139	269	1.16	5.87
11/25/94	468	93.6%	319.7	2167	0.96	12.62	138	241	1.17	5.89
11/26/94	452	94.3%	318.2	2073	7.59	5.06	119	220	1.16	6.66
11/27/94	497	93.0%	322.5	2402	10.90	5.35	168	263	1.17	5.73
11/28/94	471	93.9%	319.6	2201	3.38	9.85	135	235	1.17	5.99
11/29/94	466	94.5%	320.6	2249	8.04	5.49	123	253	1.16	5.91
12/02/94	469	#N/A	322.7	2369	3.94	10.95	#N/A	225	1.16	6.12
12/03/94	445	#N/A	323.4	2380	11.54	2.46	#N/A	256	1.18	6.14
12/04/94	425	#N/A	328.8	2324	2.97	10.10	#N/A	225	1.16	6.07
12/05/94	482	#N/A	327.5	2289	7.63	6.47	#N/A	271	1.16	6.15
12/06/94	481	#N/A	330.6	2258	6.42	7.85	#N/A	259	1.17	6.08
12/07/94	484	#N/A	333.7	2233	7.99	5.72	#N/A	264	1.16	6.11
12/08/94	393	#N/A	327.2	1553	2.77	6.84	#N/A	186	1.16	6.40
12/09/94	470	#N/A	335.1	2203	7.72	7.09	#N/A	265	1.16	6.27
12/10/94	417	#N/A	327.9	2165	11.46	3.28	#N/A	303	1.16	6.37
12/11/94	390	#N/A	327.6	2241	4.44	8.15	#N/A	277	1.16	6.42
12/12/94	474	#N/A	340.4	2522	8.10	9.06	#N/A	257	1.17	6.31
12/13/94	482	#N/A	339.4	2547	12.70	4.79	#N/A	288	1.16	6.37
12/14/94	484	#N/A	340.2	2332	6.32	9.27	#N/A	292	1.17	6.38
12/15/94	456	#N/A	339.2	2113	9.80	4.19	#N/A	274	1.17	6.43
12/16/94	455	#N/A	337.2	2130	6.24	7.51	#N/A	286	1.17	6.44
12/17/94	357	#N/A	329.9	2257	2.05	10.13	#N/A	228	1.16	6.56
12/18/94	437	#N/A	339.1	2515	11.36	3.88	#N/A	261	1.16	6.42
12/19/94	459	97.4%	337.1	2226	4.93	9.31	57	191	1.16	6.46

Appendix G - Data Summary For Major Process Variables

DATE	SLURRY pH B	SLURRY CARBONATE	TOTAL WATER TO FACILITY	AIR TO FAS	AIR TO ARS	TOTAL FGD DP	Number of Ciculation Pumps Running
	ph	mmole/l	gpm	scfm	scfm	Inches Water Column	
	AIC-138B	AIT-135	FI-264	FIC-344	FIC-345	PDI-115-01	
11/10/94	5.62	44.35	1114	8004	8057	5.30	9
11/11/94	5.63	44.62	1162	7998	8000	5.70	10
11/12/94	5.66	45.15	1175	7999	7998	6.20	10
11/13/94	5.69	45.57	1207	8002	8001	6.16	10
11/14/94	5.67	44.37	1165	8237	8045	6.47	10
11/15/94	5.63	44.57	1293	8247	8029	6.10	10
11/17/94	5.63	45.76	1248	8240	8033	6.15	10
11/18/94	5.67	46.96	1257	8240	8041	6.91	10
11/21/94	5.71	46.69	1182	8250	7996	5.59	10
11/22/94	5.70	46.48	1208	8244	8009	5.79	10
11/23/94	5.70	45.20	1260	8246	7998	6.25	10
11/24/94	5.76	45.48	1260	8255	7997	5.73	10
11/25/94	5.75	43.37	1241	8250	8001	5.56	10
11/26/94	5.79	46.08	1177	8254	7993	5.19	10
11/27/94	5.75	44.75	1281	8239	8004	6.42	10
11/28/94	5.74	47.57	1233	8254	8000	5.60	10
11/29/94	5.68	46.96	1285	8250	8007	5.51	10
12/02/94	5.85	55.95	1231	8249	8002	5.62	10
12/03/94	5.83	55.93	1301	8247	7997	5.22	9
12/04/94	5.75	47.81	1215	8250	8001	4.78	10
12/05/94	5.86	47.33	1179	8251	7998	5.70	9
12/06/94	5.80	49.71	1243	8249	7995	5.52	8
12/07/94	5.77	47.59	1230	8257	7997	5.73	10
12/08/94	6.07	62.63	1053	8246	8006	4.06	10
12/09/94	5.91	49.26	1210	8251	7991	5.50	10
12/10/94	5.99	53.99	1152	8244	8006	4.36	10
12/11/94	6.00	54.92	1122	8253	8002	3.83	10
12/12/94	5.87	49.51	1189	8252	8000	5.79	10
12/13/94	5.94	58.46	1227	8252	7997	5.96	10
12/14/94	5.94	58.12	1223	8249	7998	5.95	10
12/15/94	5.98	57.02	1181	8255	7998	5.43	10
12/16/94	5.99	52.90	1189	8251	8000	5.43	10
12/17/94	6.12	61.47	1072	8245	8006	3.59	10
12/18/94	5.98	53.40	1155	8247	8005	5.16	10
12/19/94	6.02	57.90	1194	8222	7996	5.53	10

Appendix G - Data Summary For Major Process Variables

DATE	TOTAL MW	% SO2 REMOVAL	FLUE GAS INLET FGD	SO2 INLET FGD	LIMESTONE FEED TO ABS	LIMESTONE FEED TO ABS	SO2 OUTLET	ABS. MAKEUP WATER FLOW	SLURRY DEN.	SLURRY pH A
	MW	%	F	ppm	tons/hr	tons/hr	ppm	gpm	GM/ML	ph
			TR-111	AIT-109	SIC-425A	SIC-425B	AR-126	FIC-127	AIC-134	AIC-138A
12/20/94	426	94.3%	338.5	2183	12.34	1.07	124	236	1.16	6.48
12/21/94	468	93.2%	340.3	2308	3.58	11.07	156	226	1.17	6.45
12/23/94	460	93.9%	335.8	2245	7.55	6.90	136	281	1.16	6.50
12/24/94	413	94.5%	331.8	2201	4.51	7.96	122	234	1.16	6.52
12/25/94	405	95.0%	333.0	2223	9.41	3.63	110	241	1.16	6.56
12/26/94	455	96.5%	330.1	2227	4.29	9.77	78	256	1.16	6.56
12/27/94	450	94.1%	335.8	2149	11.06	2.82	127	262	1.16	6.58
12/28/94	461	93.1%	336.6	2161	0.29	13.25	149	249	1.16	6.57
12/29/94	461	93.1%	336.6	2161	0.29	13.25	149	249	1.16	6.57
12/30/94	453	93.8%	337.7	2152	5.93	7.50	133	263	1.16	6.59
01/01/95	433	96.1%	329.6	2110	4.70	8.41	82	250	1.161	6.631
01/02/95	439	96.2%	333.8	2083	11.09	2.38	80	258	1.160	6.657
01/03/95	429	94.9%	328.0	1999	0.06	12.98	101	237	1.160	6.710
01/04/95	418	95.0%	326.9	1988	9.27	2.82	98	237	1.161	6.746
01/05/95	451	95.1%	333.6	2053	3.15	9.65	101	259	1.163	6.714
01/06/95	447	94.6%	335.7	2031	8.90	3.90	110	270	1.160	6.664
01/07/95	427	95.0%	329.6	2124	7.87	5.20	107	252	1.161	6.536
01/08/95	407	95.9%	328.1	2129	5.94	6.39	87	226	1.162	5.861
01/09/95	439	94.0%	335.7	2214	3.67	9.82	132	258	1.164	5.774
01/10/95	434	94.4%	335.9	2216	5.66	8.35	124	233	1.160	5.803
01/11/95	419	94.2%	331.2	2104	8.06	4.85	122	211	1.158	5.843
01/12/95	422	94.6%	330.5	2100	3.13	9.72	114	233	1.160	5.811
01/13/95	308	97.3%	312.5	2048	5.62	3.50	54	69	1.164	5.934
01/14/95	143	99.3%	292.3	2069	0.75	5.00	14	0	1.167	6.071
01/15/95	161	99.0%	299.7	2059	4.92	0.66	21	0	1.164	6.047
01/16/95	130	99.4%	286.5	1929	0.05	4.94	12	0	1.156	6.040
01/17/95	156	98.8%	301.7	2294	3.61	2.84	27	0	1.154	6.023
01/18/95	147	99.0%	296.5	2282	4.28	1.84	24	0	1.159	6.048
01/19/95	158	98.6%	302.0	2092	0.65	6.01	29	0	1.157	5.993
01/20/95	280	95.6%	279.9	2105	4.46	7.30	92	107	1.169	6.016
01/21/95	430	94.8%	312.0	2187	8.00	5.68	115	193	1.163	5.987
01/26/95	130	99.4%	286.5	1929	0.05	4.94	12	0	0.000	#DIV/0!
01/30/95	427	93.5%	316.4	1641	3.28	6.60	107	187	1.161	5.671
01/31/95	316	94.1%	251.9	1617	5.22	3.35	96	162	0.921	4.492
02/03/95	441	93.7%	324.6	2007	3.15	8.06	127	147	1.158	5.636

Appendix G - Data Summary For Major Process Variables

DATE	SLURRY pH B	SLURRY CARBONATE	TOTAL WATER TO FACILITY	AIR TO FAS	AIR TO ARS	TOTAL FGD DP	Number of Ciculation Pumps Running
	ph	mmole/l	gpm	scfm	scfm	Inches Water Column	
	AIC-138B	AIT-135	FI-264	FIC-344	FIC-345	PDI-115-01	
12/20/94	6.05	57.38	1156	8249	7998	4.90	10
12/21/94	6.01	54.41	1193	8246	8003	5.66	9
12/23/94	6.02	56.65	1199	8245	7998	5.38	9
12/24/94	6.03	52.36	1096	8253	8002	4.47	9
12/25/94	6.07	52.20	1133	8251	7990	4.34	10
12/26/94	6.06	53.96	1161	8253	7998	5.17	10
12/27/94	6.09	53.26	1151	8246	8005	5.10	10
12/28/94	6.07	53.39	1140	8249	7996	5.14	10
12/29/94	6.07	53.39	1140	8249	7996	5.14	9
12/30/94	6.09	51.73	1103	8250	8001	5.20	10
01/01/95	6.108	50.61	93872	8243	8002	4.91	10
01/02/95	6.132	53.18	95500	8242	8006	5.02	9
01/03/95	6.168	54.94	97123	8249	7995	4.81	9
01/04/95	6.208	54.82	98729	8246	8000	4.59	9
01/05/95	6.172	56.98	26442	8256	8000	5.35	9
01/06/95	6.136	55.31	2064	8255	7994	5.26	8
01/07/95	6.108	37.71	3672	8257	7994	4.64	9
01/08/95	5.910	79.04	5220	8252	7996	4.35	8
01/09/95	5.821	55.96	6735	8253	7997	4.99	5
01/10/95	5.837	54.14	8436	8256	8000	4.84	5
01/11/95	5.874	55.38	10160	8249	8006	4.43	5
01/12/95	5.831	45.29	11886	8249	8000	4.81	5
01/13/95	5.943	48.52	13491	8258	8000	2.87	5
01/14/95	6.085	52.02	14691	8242	8003	0.70	5
01/15/95	6.083	50.08	15774	8255	7994	0.71	6
01/16/95	6.059	33.21	16878	8249	8007	0.81	9
01/17/95	6.039	35.69	17948	8252	8004	0.75	#DIV/0!
01/18/95	6.032	32.71	18976	8234	7979	0.90	#DIV/0!
01/19/95	5.972	27.40	19997	8087	8003	1.11	#DIV/0!
01/20/95	5.943	43.75	21157	8256	7989	3.45	#DIV/0!
01/21/95	5.931	48.13	22755	8249	8000	5.18	#DIV/0!
01/26/95	#DIV/0!	#DIV/0!	#DIV/0!	#DIV/0!	#DIV/0!	#DIV/0!	6
01/30/95	5.679	53.10	37515	8251	7970	4.50	8
01/31/95	4.479	37.04	30779	6534	6330	3.19	9
02/03/95	5.637	55.08	43894	8248	8001	5.04	10

Appendix G - Data Summary For Major Process Variables

DATE	TOTAL MW	% SO2 REMOVAL	FLUE GAS INLET FGD	SO2 INLET FGD	LIMESTONE FEED TO ABS	LIMESTONE FEED TO ABS	SO2 OUTLET	ABS. MAKEUP WATER FLOW	SLURRY DEN.	SLURRY pH A
	MW	%	F	ppm	tons/hr	tons/hr	ppm	gpm	GM/ML	ph
			TR-111	AIT-109	SIC-425A	SIC-425B	AR-126	FIC-127	AIC-134	AIC-138A
02/04/95	418	93.8%	322.3	2166	10.10	1.93	135	171	1.162	5.683
02/05/95	453	94.7%	320.1	2156	5.08	8.20	114	182	1.166	5.684
02/06/95	458	95.6%	328.1	2210	4.07	9.63	98	230	1.162	5.754
02/07/95	426	95.3%	326.6	2130	9.88	2.49	100	115	1.164	5.833
02/08/95	458	96.7%	330.7	2153	2.46	9.95	70	156	1.159	5.821
02/09/95	467	95.6%	334.8	2129	6.95	6.03	94	201	1.162	5.864
02/10/95	439	95.4%	326.0	2165	8.43	4.69	99	224	1.172	5.925
02/11/95	471	96.2%	324.2	2275	8.41	5.56	86	148	1.188	5.944
02/12/95	463	95.7%	329.6	2291	6.66	7.49	98	147	1.184	5.948
02/13/95	447	96.1%	330.2	2217	3.72	9.64	87	98	1.173	5.987
02/14/95	450	97.1%	337.3	2250	8.03	4.31	64	213	1.176	5.998
02/15/95	455	97.6%	332.9	2171	3.75	8.55	52	181	1.176	6.051
02/16/95	447	96.1%	331.1	2133	9.56	3.33	84	181	1.165	6.062
02/17/95	439	96.6%	332.3	2184	3.80	8.62	75	210	1.168	6.118
02/18/95	429	96.6%	330.4	2109	11.34	1.15	72	210	1.171	6.547
02/19/95	435	96.0%	329.1	2335	4.72	8.86	92	218	1.172	6.811
02/20/95	464	96.6%	334.8	2323	5.71	7.91	80	213	1.171	6.858
02/21/95	420	96.8%	330.1	2151	5.14	6.81	69	175	1.175	6.891
02/22/95	447	96.1%	331.7	2117	8.78	3.59	82	214	1.164	6.349
02/23/95	416	96.5%	327.9	2159	5.77	5.84	76	190	1.160	6.281
02/25/95	435	96.7%	330.7	2146	4.11	7.34	72	206	1.173	6.402
02/26/95	440	96.7%	330.6	2137	10.02	2.43	70	195	1.171	6.554
02/27/95	445	96.4%	329.7	2005	0.47	11.36	73	237	1.177	6.608
02/28/95	430	96.6%	328.3	2350	8.77	4.73	80	193	1.171	6.665
03/02/95	443	96.2%	329.5	2139	3.83	8.95	80	194	1.173	6.816
03/03/95	425	96.7%	331.6	2084	7.91	4.43	69	215	1.176	6.874
03/04/95	434	96.4%	333.0	2099	7.47	5.29	76	229	1.170	6.815
03/05/95	436	96.8%	332.3	1966	4.40	7.78	62	294	1.167	6.264
03/06/95	450	96.9%	335.5	1917	7.86	4.32	60	256	1.171	5.680
03/07/95	170	95.3%	272.4	1660	4.75	0.34	77	35	1.177	5.886
03/08/95	144	99.7%	295.9	1994	0.06	3.39	7	0	1.165	5.881
03/09/95	156	99.0%	297.9	1974	0.05	3.56	20	3	1.170	5.889
03/10/95	242	97.2%	278.5	1638	0.25	5.34	46	77	1.169	5.807
03/11/95	318	97.2%	329.4	1833	8.06	0.31	51	212	1.174	5.739
03/12/95	309	97.4%	333.4	1193	3.93	0.99	31	225	1.162	5.892

Appendix G - Data Summary For Major Process Variables

DATE	SLURRY pH B	SLURRY CARBONATE	TOTAL WATER TO FACILITY	AIR TO FAS	AIR TO ARS	TOTAL FGD DP	Number of Ciculation Pumps Running
	ph	mmole/l	gpm	scfm	scfm	Inches Water Column	
	AIC-138B	AIT-135	FI-264	FIC-344	FIC-345	PDI-115-01	
02/04/95	5.659	50.78	45452	8253	7995	4.32	11
02/05/95	5.640	48.84	47025	8245	8004	5.25	10
02/06/95	5.647	50.45	48641	8255	7998	5.66	11
02/07/95	5.710	52.15	50271	8252	8002	4.71	11
02/08/95	5.669	51.19	51870	8250	8002	5.30	10
02/09/95	5.652	52.28	53512	8248	8001	5.64	11
02/10/95	5.669	66.98	55144	8247	8002	5.10	10
02/11/95	5.665	86.65	56761	8202	8005	6.26	10
02/12/95	5.661	74.44	58432	8229	8006	6.03	10
02/13/95	5.709	35.82	60068	8249	8004	5.52	10
02/14/95	5.710	82.60	61713	8246	8002	5.71	10
02/15/95	5.724	79.07	63363	8250	7993	5.71	11
02/16/95	5.741	84.09	64960	8249	8002	5.20	10
02/17/95	5.746	84.08	66565	8254	8002	4.96	10
02/18/95	5.742	80.47	68158	8256	7999	4.78	9
02/19/95	5.734	78.37	69755	8241	8013	5.03	#DIV/0!
02/20/95	5.728	77.06	71411	8253	7999	5.99	10
02/21/95	5.773	79.82	73052	8245	8006	4.89	10
02/22/95	5.773	89.92	74664	8249	8002	5.14	11
02/23/95	5.819	67.25	76387	8246	7999	4.58	11
02/25/95	5.828	90.62	79467	8248	8008	4.95	10
02/26/95	5.802	79.11	81106	8248	8002	5.32	10
02/27/95	5.772	76.18	82732	8247	7999	5.50	10
02/28/95	5.808	74.95	84391	8254	7999	5.30	10
03/02/95	5.854	79.98	87699	8247	7998	5.19	7
03/03/95	5.915	87.47	89295	8257	7999	4.86	5
03/04/95	5.894	79.94	90936	8253	8006	5.13	5
03/05/95	5.915	82.92	92563	8250	7995	5.25	6
03/06/95	5.940	79.98	94215	8253	8001	5.57	7
03/07/95	6.150	97.41	95603	8247	7997	1.75	6
03/08/95	6.116	64.94	96564	8251	7998	0.93	8
03/09/95	6.143	72.41	97540	8246	8003	1.22	9
03/10/95	6.116	74.26	98608	8251	7998	3.08	8
03/11/95	6.105	78.02	49956	8248	8002	2.37	8
03/12/95	6.276	80.75	1362	8243	8004	2.06	8

Appendix G - Data Summary For Major Process Variables

DATE	TOTAL MW	% SO2 REMOVAL	FLUE GAS INLET FGD	SO2 INLET FGD	LIMESTONE FEED TO ABS	LIMESTONE FEED TO ABS	SO2 OUTLET	ABS. MAKEUP WATER FLOW	SLURRY DEN.	SLURRY pH A
	MW	%	F	ppm	tons/hr	tons/hr	ppm	gpm	GM/ML	ph
			TR-111	AIT-109	SIC-425A	SIC-425B	AR-126	FIC-127	AIC-134	AIC-138A
03/13/95	309	98.1%	333.1	1612	0.06	7.32	31	210	1.164	5.767
03/14/95	309	97.1%	333.6	2063	4.88	3.27	60	96	1.157	5.805
03/15/95	307	96.8%	331.8	2306	3.62	6.60	74	145	1.168	5.802
03/16/95	303	96.7%	331.4	2368	4.81	5.29	78	122	1.169	5.851
03/17/95	296	96.4%	327.5	2320	9.50	0.31	84	100	1.171	5.874
03/18/95	287	95.9%	325.4	2079	0.29	7.95	84	145	1.179	5.892
03/19/95	295	98.1%	326.7	2037	5.86	2.58	39	111	1.184	5.916
03/20/95	250	94.9%	315.6	1991	1.95	5.13	102	76	1.188	5.946
03/21/95	298	96.6%	323.3	2032	3.24	5.78	68	78	1.183	5.910
03/22/95	300	97.2%	324.1	2034	6.82	1.42	57	113	1.186	5.992
03/23/95	291	97.4%	324.1	2013	0.05	7.74	53	111	1.185	6.021
03/24/95	308	96.3%	325.5	2028	5.28	2.70	76	134	1.186	5.954
03/25/95	296	96.7%	328.7	1971	6.29	1.65	64	111	1.186	5.982
03/26/95	306	97.1%	327.7	1972	3.26	5.26	57	117	1.185	5.987
03/27/95	146	96.2%	238.1	926	3.84	0.31	35	52	1.189	6.599
03/28/95	10	#N/A	91.9	#N/A	0.28	0.36	25	5	1.176	7.303
03/29/95	1	71.5%	105.6	57	0.05	0.34	16	1	1.164	7.236
03/30/95	283	98.4%	305.6	1888	0.04	7.49	30	115	1.166	6.021
03/31/95	341	97.9%	322.8	2109	6.44	3.34	44	140	1.186	6.016
04/02/95	357	98.7%	325.2	2044	5.69	4.21	26	177	1.183	5.977
04/03/95	444	97.6%	329.4	2082	3.40	8.62	51	178	1.185	5.946
04/04/95	464	97.3%	327.6	2140	7.12	5.42	57	168	1.185	5.991
04/05/95	469	96.0%	331.6	2113	0.40	11.52	85	155	1.185	5.980
04/06/95	453	98.8%	331.0	2100	5.72	6.24	26	181	1.186	5.910
04/07/95	444	96.6%	330.1	2117	5.31	6.95	73	137	1.183	5.958
04/08/95	450	97.3%	328.4	2126	5.77	7.32	57	158	1.185	6.034
04/09/95	485	97.1%	331.3	2158	11.26	2.15	62	177	1.186	5.954
04/11/95	460	#N/A	328.0	2021	5.33	7.16	#N/A	90	1.183	5.888
04/12/95	462	#N/A	326.7	2051	4.32	8.07	#N/A	186	1.185	5.751
04/13/95	462	#N/A	329.4	2160	7.00	5.67	#N/A	169	1.184	5.819
04/14/95	455	#N/A	329.9	2112	4.14	8.24	#N/A	163	1.185	5.915
04/15/95	432	#N/A	329.6	2118	11.26	1.50	#N/A	187	1.186	5.874
04/16/95	422	#N/A	328.2	2174	4.75	8.01	#N/A	187	1.185	5.817
04/17/95	448	#N/A	330.6	2116	7.09	5.47	#N/A	221	1.184	5.822
04/18/95	427	#N/A	325.5	2022	3.10	9.03	#N/A	217	1.184	5.877

Appendix G - Data Summary For Major Process Variables

DATE	SLURRY pH B	SLURRY CARBONATE	TOTAL WATER TO FACILITY	AIR TO FAS	AIR TO ARS	TOTAL FGD DP	Number of Ciculation Pumps Running
	ph	mmole/l	gpm	scfm	scfm	Inches Water Column	
	AIC-138B	AIT-135	FI-264	FIC-344	FIC-345	PDI-115-01	
03/13/95	6.072	74.74	2801	8163	7918	2.11	8
03/14/95	6.031	59.83	4309	8255	8000	2.23	8
03/15/95	6.025	58.46	5692	8248	8009	2.21	8
03/16/95	6.090	72.83	7128	8261	7990	2.07	8
03/17/95	6.107	77.05	8537	8253	7992	1.98	8
03/18/95	6.094	75.47	9933	8251	7997	1.88	7
03/19/95	6.105	74.47	11324	8249	7999	1.98	7
03/20/95	6.123	68.56	12699	8103	7997	1.58	7
03/21/95	6.104	60.39	14054	8006	7990	1.98	8
03/22/95	6.174	107.58	15454	8000	7995	2.01	7
03/23/95	6.190	96.64	16835	7998	8004	1.94	4
03/24/95	6.182	66.83	18209	8001	7999	2.28	4
03/25/95	6.190	51.98	19609	8008	7990	2.16	7
03/26/95	6.200	55.77	21014	7995	8005	2.51	9
03/27/95	6.818	79.14	22350	7999	8004	1.59	#DIV/0!
03/28/95	7.380	74.82	23394	7998	7999	0.68	8
03/29/95	7.268	71.35	24103	8005	7993	0.53	9
03/30/95	6.188	57.79	25106	7998	7998	2.06	8
03/31/95	6.145	51.78	26578	8011	7983	2.69	8
04/02/95	6.124	53.31	29492	8011	7992	4.00	11
04/03/95	6.094	53.45	31031	7996	8001	5.39	11
04/04/95	6.089	52.62	32788	7996	8000	5.32	10
04/05/95	6.131	58.51	34455	7997	8006	5.51	#DIV/0!
04/06/95	6.052	53.64	36134	7998	8002	5.86	9
04/07/95	6.070	59.39	37750	7998	8005	5.81	7
04/08/95	6.151	71.75	39354	8006	8000	5.95	7
04/09/95	6.068	68.51	40957	7995	8005	6.33	8
04/11/95	6.174	76.73	44196	7999	7999	5.43	10
04/12/95	5.844	82.89	45739	8006	7993	5.05	11
04/13/95	5.924	99.52	47331	7999	7998	5.14	10
04/14/95	6.031	100.12	49062	7994	8007	5.29	10
04/15/95	5.985	98.88	50783	7999	8000	5.11	9
04/16/95	5.970	88.23	52405	7997	8001	5.26	8
04/17/95	5.998	97.27	54129	8000	8003	5.82	8
04/18/95	6.067	86.85	55883	7998	7996	5.31	9

Appendix G - Data Summary For Major Process Variables

DATE	TOTAL MW	% SO2 REMOVAL	FLUE GAS INLET FGD	SO2 INLET FGD	LIMESTONE FEED TO ABS	LIMESTONE FEED TO ABS	SO2 OUTLET	ABS. MAKEUP WATER FLOW	SLURRY DEN.	SLURRY pH A
	MW	%	F	ppm	tons/hr	tons/hr	ppm	gpm	GM/ML	ph
			TR-111	AIT-109	SIC-425A	SIC-425B	AR-126	FIC-127	AIC-134	AIC-138A
04/19/95	457	#N/A	327.5	2077	8.77	4.21	#N/A	128	1.186	5.855
04/20/95	431	#N/A	323.9	2050	2.86	9.17	#N/A	150	1.185	5.885
04/21/95	463	#N/A	326.5	2108	4.38	8.28	#N/A	171	1.185	5.888
04/22/95	432	#N/A	326.3	2165	10.62	1.62	#N/A	233	1.185	5.910
04/23/95	447	#N/A	326.6	2093	1.73	11.34	#N/A	209	1.186	5.891
04/24/95	418	#N/A	325.1	2059	4.39	6.85	#N/A	201	1.186	5.946
04/25/95	463	#N/A	331.7	2098	9.75	3.44	#N/A	237	1.185	5.898
04/26/95	498	#N/A	336.9	2104	5.87	7.29	#N/A	233	1.185	5.983
04/27/95	451	#N/A	327.1	2082	5.14	6.87	#N/A	235	1.183	6.005
04/28/95	448	#N/A	330.6	2091	7.23	4.98	#N/A	270	1.184	6.024
04/29/95	434	#N/A	329.4	2091	5.29	7.42	#N/A	209	1.186	6.036
04/30/95	459	#N/A	329.8	2082	7.48	6.11	#N/A	215	1.183	6.059
05/02/95	452	#N/A	333.8	2091	7.17	5.80	#N/A	195	1.187	6.115
05/03/95	479	#N/A	334.6	2107	3.71	9.43	#N/A	231	1.184	6.115
05/04/95	481	#N/A	333.6	2185	8.57	5.43	#N/A	235	1.184	6.116
05/05/95	434	#N/A	330.5	2199	5.92	7.07	#N/A	195	1.188	6.148
05/06/95	392	97.5%	330.0	2117	7.13	5.05	52	168	1.184	6.186
05/07/95	430	79.6%	143.7	183	0.05	1.29	37	0	1.136	7.257
05/08/95	434	98.4%	99.4	144	0.05	1.19	2	0	1.143	7.500
05/09/95	429	96.7%	328.8	2037	7.65	4.08	66	190	1.174	6.131
05/10/95	425	97.1%	325.9	2051	3.88	8.22	59	143	1.172	6.117
05/11/95	445	96.9%	327.1	2054	5.97	6.28	63	131	1.175	6.135
05/12/95	444	95.5%	330.1	2042	9.00	3.45	92	202	1.173	6.141
05/13/95	434	94.0%	327.1	1962	6.61	5.89	117	194	1.185	6.165
05/14/95	364	96.2%	314.1	1959	3.35	7.58	75	179	1.189	6.197
05/15/95	415	95.7%	328.3	2143	6.41	6.66	92	174	1.184	6.153
05/16/95	458	95.5%	330.4	2098	6.33	6.92	93	240	1.188	6.202
05/17/95	433	96.5%	320.2	2021	7.20	4.87	71	188	1.188	6.249
05/18/95	454	95.9%	324.6	2028	5.87	7.48	83	196	1.186	6.234
05/19/95	436	96.3%	327.0	2027	8.52	3.70	75	209	1.185	6.257
05/20/95	335	97.7%	308.2	1945	2.59	6.50	45	132	1.184	6.336
05/21/95	336	97.6%	308.0	1976	5.62	4.57	48	149	1.186	6.209
05/22/95	339	97.5%	311.6	1999	3.96	5.34	50	151	1.183	5.771
05/23/95	339	97.3%	308.5	1924	4.74	5.29	53	188	1.182	5.769
05/24/95	338	97.2%	297.0	1992	4.87	5.25	55	49	1.183	5.785

Appendix G - Data Summary For Major Process Variables

DATE	SLURRY pH B	SLURRY CARBONATE	TOTAL WATER TO FACILITY	AIR TO FAS	AIR TO ARS	TOTAL FGD DP	Number of Ciculation Pumps Running
	ph	mmole/l	gpm	scfm	scfm	Inches Water Column	
	AIC-138B	AIT-135	FI-264	FIC-344	FIC-345	PDI-115-01	
04/19/95	6.059	85.59	57605	8000	8000	5.86	9
04/20/95	6.101	85.59	59335	8000	8000	5.28	10
04/21/95	6.100	83.64	61133	8001	7995	5.19	8
04/22/95	6.130	81.54	62894	7993	8005	4.75	10
04/23/95	6.096	59.28	64699	8005	7996	5.51	10
04/24/95	6.158	55.81	66478	7995	8005	5.18	10
04/25/95	6.092	74.39	68256	8001	7996	6.08	11
04/26/95	6.214	71.58	70105	7996	7998	5.99	#DIV/0!
04/27/95	6.223	74.28	71980	8002	7996	5.71	9
04/28/95	6.223	73.69	73778	7992	8001	5.84	8
04/29/95	6.250	77.03	75617	7976	8001	5.60	8
04/30/95	6.278	66.44	77366	7997	8008	6.22	9
05/02/95	6.283	95.31	80891	8003	7992	5.43	1
05/03/95	6.261	92.18	82716	7998	8004	5.71	1
05/04/95	6.266	98.07	84530	7988	8009	5.86	10
05/05/95	6.271	101.22	86333	7982	8003	5.27	11
05/06/95	6.298	82.40	88008	7979	7997	4.52	11
05/07/95	7.430	133.06	89325	7173	8002	6.14	11
05/08/95	7.422	107.60	90202	6482	8002	6.20	9
05/09/95	6.226	59.63	91496	8007	7995	5.38	10
05/10/95	6.245	61.60	93102	8001	8000	5.57	11
05/11/95	6.228	59.14	94774	8002	8001	6.10	11
05/12/95	6.231	63.23	96392	7994	8003	6.02	11
05/13/95	6.242	63.34	98079	7994	8005	5.50	11
05/14/95	6.242	64.34	70164	8000	8000	4.50	11
05/15/95	6.228	63.88	1349	8008	7994	5.42	11
05/16/95	6.279	79.37	3037	8002	7996	6.46	11
05/17/95	6.377	68.21	4785	8000	8002	5.98	11
05/18/95	6.358	90.00	6474	7997	7996	6.37	11
05/19/95	6.361	90.36	8198	7999	8001	5.91	11
05/20/95	6.405	93.32	9753	7997	8004	3.81	4
05/21/95	6.290	87.26	11219	7998	8003	3.91	4
05/22/95	5.832	82.43	12718	7999	8004	3.87	4
05/23/95	5.856	74.47	14186	7998	7999	4.22	4
05/24/95	5.858	72.13	15618	8006	7997	3.93	5

Appendix G - Data Summary For Major Process Variables

DATE	TOTAL MW	% SO2 REMOVAL	FLUE GAS INLET FGD	SO2 INLET FGD	LIMESTONE FEED TO ABS	LIMESTONE FEED TO ABS	SO2 OUTLET	ABS. MAKEUP WATER FLOW	SLURRY DEN.	SLURRY pH A
	MW	%	F	ppm	tons/hr	tons/hr	ppm	gpm	GM/ML	ph
			TR-111	AIT-109	SIC-425A	SIC-425B	AR-126	FIC-127	AIC-134	AIC-138A
05/28/95	113	99.5%	292.0	1818	3.63	0.31	9	0	1.179	6.161
05/29/95	112	99.6%	287.3	1883	3.26	0.58	8	0	1.181	6.177
05/30/95	163	99.1%	304.0	1984	0.05	4.74	17	1	1.180	6.108
05/31/95	110	99.6%	294.7	1862	0.04	3.32	7	1	1.171	6.207
06/02/95	125	99.0%	298.6	1814	0.42	3.92	19	0	1.163	6.236
06/03/95	158	97.5%	288.7	1888	4.44	0.31	48	65	1.174	6.238
06/04/95	271	94.8%	291.1	1867	6.67	2.18	97	213	1.174	6.047
06/05/95	365	95.9%	322.6	1975	3.91	6.36	82	196	1.177	6.047
06/06/95	298	96.3%	320.7	1917	6.29	2.73	71	136	1.172	6.085
06/07/95	285	96.5%	317.1	1931	0.04	8.33	68	77	1.173	6.100
06/08/95	289	97.0%	315.0	1933	4.86	3.91	58	158	1.172	6.051
06/09/95	386	95.3%	318.5	2000	7.29	4.65	93	194	1.177	5.874
06/10/95	452	95.3%	324.6	2026	6.00	7.42	95	195	1.176	6.001
06/11/95	406	96.2%	317.9	2011	9.12	2.86	77	186	1.181	6.002
06/12/95	449	95.3%	318.5	2054	7.26	5.96	96	197	1.185	5.951

Appendix G - Data Summary For Major Process Variables

DATE	SLURRY pH B	SLURRY CARBONATE	TOTAL WATER TO FACILITY	AIR TO FAS	AIR TO ARS	TOTAL FGD DP	Number of Ciculation Pumps Running
	ph	mmole/l	gpm	scfm	scfm	Inches Water Column	
	AIC-138B	AIT-135	FI-264	FIC-344	FIC-345	PDI-115-01	
05/28/95	6.151	46.87	3805	8007	8005	0.46	4
05/29/95	6.172	50.23	5702	7997	8004	0.62	4
05/30/95	6.107	51.40	7599	7998	7999	0.65	6
05/31/95	6.199	52.66	9564	8003	7998	0.71	10
06/02/95	6.302	65.55	13423	7988	8003	1.05	8
06/03/95	6.440	80.02	15341	7999	8003	1.85	9
06/04/95	6.219	73.12	17461	7993	7997	3.53	10
06/05/95	6.122	75.80	19854	8005	7998	5.12	11
06/06/95	6.136	72.43	22134	7992	8002	1.32	11
06/07/95	6.098	68.88	24280	7991	8001	2.06	11
06/08/95	6.103	70.29	26462	8003	7998	2.89	11
06/09/95	5.994	67.95	28714	7919	8002	4.84	11
06/10/95	5.992	81.06	31121	7957	7975	6.20	11
06/11/95	5.994	81.84	33542	7903	7999	5.34	11
06/12/95	5.932	74.92	35980	7997	8048	6.21	11

APPENDIX H
MAJOR EQUIPMENT REPAIR HISTORY

Appendix H -Major Equipment Repair History

EQUIPMENT ID	TYPE	FAILURE	DOWN TIME	REPAIR TIME	HIST #	WO #	FAILURE DESCRIPTION	WORK
A-120A	CM	RD	0	16	000114	000113	Packing case leak	Replace packing
A-120A	CM	MF	0	9	002856	001349	Gear box oil leak	Replace seals
A-120A	CM	NF	7	5	003667	002789	Oil cooling fan bearing bad	Replace fan and motor
A-120A	CM	BF	0	5	003756	002189	BARCO joint worn	Replace joint
A-120B	CM	NF	0	4	000141	000184	Packing case leak	Replace packing
A-120B	CM	BF	0	4.5	002358	001912	BARCO joint leak	Replace joint
A-120B	CM	BF	0	4.5	004789	003357	Oil cooling fan bearing worn	Replace cooling fan motor
A-120B	CM	ER	0	6	005896	003929	Wash line leak	Replace valve
A-120C	CM	NF	1	2	000133	000179	Packing case leak	Replace packing
A-120C	CM	NF	0	1.5	000309	000185	Air tube leak	Replace gasket
A-120C	CM	BF	12	150	000679	000722	ARS joint leaking air	Replace air tube, split ring, gauge ring
A-120C	CM	BF	0	0.5	000803	000888	Short in heat trace box	Replace heat trace box wiring
A-120C	EM	AT	0	1.5	001001	001017	Short in heat trace box	Retape wires
A-120C	CM	NF	0	4	002992	002285	Flush water line leak	Tighten packing
A-120C	EM	BF	0	3	003140	002533	BARCO joint locked up	Repair BARCO joint
A-120C	CM	BF	0	11	003226	002544	BARCO joint failure	Replace BARCO joint
A-120C	CM	BF	0	1	004174	002592	Gear box oil leak	Replace seals
A-120C	CM	BF	0	1	004524	003142	Switch for oil heater broken	Replace switch
A-130A	CM	NF	0	4	001410	001239	Packing leak	Replace packing
A-130A	EM	MF	0	0.75	001835	001590	Packing leak	Replace packing
A-130A	SD	NF	0	4	002627	002066	Packing leak	Replace packing
A-130A	CM	NF	0	2	005468	003676	Packing leak	Replace packing
A-130B	CM	NF	0	1.5	001232	001153	Packing leak	Replace packing
A-130B	CM	NF	0	4	001411	001240	Packing leak	Replace packing
A-130B	CM	ER	0	2	002386	001924	Packing leak	Replace packing
A-130B	SD	NF	0	4	002626	002067	Packing leak	Replace packing
A-130B	CM	NF	0	2	005222	003531	Packing leak	Replace packing
A-130B	CM	NF	0	2	005469	003682	Packing leak	Replace packing
A-130B	SD	AT	0	1.5	006905	004415	Shaft leaks	Replace packing
A-140A	CM	AT	0	4	000839	000896	Packing leak	Replace packing
A-140A	CM	NF	0	4	001409	001241	Packing leak	Replace packing
A-140A	EM	NF	0	2.6	005224	003551	Packing leak	Replace packing

See Last Page for Legend of Abbreviations

Appendix H -Major Equipment Repair History

EQUIPMENT ID	TYPE	FAILURE	DOWN TIME	REPAIR TIME	HIST #	WO #	FAILURE DESCRIPTION	WORK
A-140A	CM	AT	0	1.5	006906	004610	Shaft leaks	Replace packing
A-140B	CM	NF	0	0.25	000180	000234	Casing leak	Replace packing
A-140B	CD	AT	0	2	000840	000897	Packing leak	Replace packing
A-140B	CD	NF	0	4	001408	001242	Packing leak	Replace packing
A-140B	EM	NF	0	2.6	005225	003552	Packing leak	Replace packing
A-140B	CM	AT	0	1.5	006907	004611	Packing glands corroded	Replace packing
A-320	EM	AT	0	4	000011	000018	Ice on blades	Remove ice
A-370	CM	BF	0	12	004051	003032	Shaft bent	Replace shaft
A-370	CM	BF	1	30	004138	003051	Mounting bolts broken	Replace bolts
A-900	CM	MF	0	14	001976	001676	Gear box worn	Rebuild gearbox
A-920	CM	NF	0	1	002767	002135	Gearbox loud	Replace belt
A-920	CM	DE	1	18	003385	002670	Shaft blades broken	Replace shaft, gearbox
A-920	CM	BF	0	1	003408	002711	Mixer not turning	Replace belt
A-920	EM	BF	0	14	003571	002669	Agitator will not start	Replace belt
A-920	CM	BF	0	12	005870	003881	Agitator damaged	Replace bearing
A-920	CM	NF	0	5	005910	003871	Motor rattling	Replace motor
A-920	CM	BF	0	4	006910	004594	Drive belt worn	Replace belt
A-920	CM	BF	0	13	007059	004612	Gear box worn	Repair gear box
A-960	CM	MF	0	8	003772	002553	Oil leak	Replace seal
AIC-1002	EM	NF	0	1.5	005391	003648	pH meter reading high	Replace probe
AIT-1003	CM	NF	0	2	001426	001193	Meter vessels broken	Repair meter vessels
AIT-1003	CM	BF	0	2.5	002053	001708	Overflow pipe leaks	Repair piping
AIT-1003	CM	NF	0	4	005794	003826	Unit will not calibrate	Replace sensor
AIT-134	EM	MF	0	8	000549	000672	Spool piece broken	Replace spool piece
AIT-134	EM	DE	0	1.5	000559	000682	Leaking spool piece	Replace spool piece
AIT-134	EM	ER	0	1	004152	003067	Valve leaks	Replace valve
AIT-134	CM	MF	0	3	005059	003483	Valve leaks	Replace valve
AIT-134	EM	ER	0	2	006264	004188	Analyzer discharge leaks	Weld hole
AIT-134	CM	ER	0	3	006996	004574	Valve leaks	Replace valve
AIT-135	EM	NF	0	0.5	000153	000229	Pipe nipple leaking	Replace nipple
AIT-135	CM	NF	0	2	000235	000289	Valve leaks	Replace valve
AIT-135	EM	PL	0	2	000596	000688	Ground fault in analyzer	Tape leads

See Last Page for Legend of Abbreviations

Appendix H -Major Equipment Repair History

EQUIPMENT ID	TYPE	FAILURE	DOWN TIME	REPAIR TIME	HIST #	WO #	FAILURE DESCRIPTION	WORK
AIT-135	EM	NF	0	0.3	001005	001022	Slurry tubes plugged	Replace slurry tubes
AIT-135	EM	ER	0	1	001878	001628	Nipple leaks	Replace nipple
AIT-135	EM	NF	0	4	001924	001651	Mass flow controller failure	Replace controller
AIT-135	EM	NF	0	5.3	005279	003590	Agitator not working	Rewire agitator
AIT-135	CM	BF	0	1	005462	002882	Agitator will not turn	Replace bearing
AIT-135	CM	ER	2	12	005815	003858	Sampler not functioning	Replace shaft, bearings
AIT-135	CM	BF	0	6	005962	003255	Gears on sampler worn	Replace gears
AIT-135	EM	NF	0	8	006271	004190	Temperature fluctuations in cell	Replace temperature probe
AIT-135	EM	MF	0	2	006274	004193	Agitator gearbox broken	Repair gearbox
AIT-135	CM	DE	0	9	006602	004349	Reaction agitator broken	Repair agitator
AIT-135	CM	RD	0	7	006684	004409	Agitator broken	Replace agitator
AIT-135	EM	MF	0	5	006985	004651	Analyzer readings erratic	Replace check valve
AIT-135	EM	AT	0	6	007340	004805	Excess water in analyzer	Replace check valves
AIT-135	CM	BF	0	1.5	007531	004767	Rotometer leaks	Replace rotometer
AIT-136	EM	IE	0	6	002640	002098	Analyzer not responding	Replace reactor cell
AIT-136	CM	NF	0	3.5	003023	002453	analyzer off line	Replace mixer motor
AIT-136	EM	NF	0	2.3	003219	002557	Reactor cell cracked	Replace reactor cell
AIT-136	CM	NF	1	2	003315	002619	Sampler not functioning	Replace sampler
AIT-136	CM	WP	0	2.5	006311	004218	Analyzer pump failing	Replace pump
AIT-136	EM	AT	0	12	006325	004222	Analyzer readings erratic	Replace filter cartage
AIT-136	EM	ER	0	4	007148	004717	Agitator broken	Replace agitator
AIT-138	EM	MF	0	1.5	006729	004529	Temperature probe failure	Replace temperature probe
AIT-138A	CM	DE	0	5	001093	000868	Display not working	Replace circuit boards
AIT-138A	CM	DE	0	1.5	001154	001079	Weap hole leaking	Replace diaphragm
AIT-138A	EM	NF	0	1	001160	001111	pH analyzer not working correctly	Replace electrode
AIT-138A	EM	NF	49	2	001267	001184	Spool piece leaking	Replace spool piece
AIT-138A	EM	MF	0	1.5	001375	001279	Diaphragm leaks	Replace diaphragm
AIT-138A	CM	MF	0	0.5	002237	001838	High temperature alarm	Replace probe
AIT-138A	CM	NF	0	2	003003	002384	Valve leaks	Replace diaphragm
AIT-138A	EM	BF	0	2	003313	002621	pH meter will not calibrate	Replace electrode
AIT-138A	CM	NF	0	1.5	005527	003749	pH meter will not calibrate	Replace electrode
AIT-138A	EM	NF	0	2	007663	004995	Analyzer drifts	Replace probe

See Last Page for Legend of Abbreviations

Appendix H -Major Equipment Repair History

EQUIPMENT ID	TYPE	FAILURE	DOWN TIME	REPAIR TIME	HIST #	WO #	FAILURE DESCRIPTION	WORK
AIT-138B	CM	BF	0	1.5	000632	000712	Leaking at inspection hole	Replace diaphragm
AIT-138B	CM	NF	0	3	002794	002181	Unit will not calibrate	Replace electrode
AIT-190A	CM	BF	0	2	000307	000252	pH meter will not calibrate	Replace probe
AIT-190A	CM	BF	0	2	000308	000362	Valve will not open	Replace bonnet assembly
AIT-190A	CM	NF	26	1	000450	000373	Valve leaks	Replace diaphragm
AIT-190A	CM	BF	0	1	000699	000375	Valve leaks	Replace valve
AIT-190A	CM	NF	0	2	000998	001015	pH meter will not calibrate	Replace probe
AIT-190A	CM	NF	0	1	002423	001945	Valve leaks	Replace diaphragm
AIT-190A	CM	ER	0	2	005730	003846	Valve leaks	Replace diaphragm
AIT-190A	CM	ER	0	10	005893	003894	Analyzer not reading	Replace valve
AIT-190A	CM	MF	0	2	006456	003936	Circuit board failure	Replace circuit board
AIT-190B	EM	BF	0	2	000075	000112	Valve leaks	Replace diaphragm
AIT-190B	EM	BF	0	2	000151	000227	Valve will not open	Replace solenoid coil
AIT-190B	CM	NF	0	2	000152	000228	pH meter will not calibrate	Replace probe
AIT-190B	EM	NF	0	2	000735	000826	Valve leaks	Replace diaphragm
AIT-190B	CM	OE	0	5	000776	000869	Valve leaks	Repair flange
AR-1000	EM	NF	0	0.25	000940	000982	Penwheel broken	Replace penwheel
AR-1000	EM	NF	0	1	001940	001659	Recorder not printing	Replace drive motor
B-110A	EM	IE	0	0.5	000619	000709	Light in heat tract box out	Tighten leads
B-110A	CM	IE	0	1	003245	002575	Oil pump leak	Replace pipe nipples and union
B-110A	CM	NF	5	8	004905	003384	Collar joint leak	Repack joints
B-110A	CM	BF	0	4	005303	003564	Coupling leak	Replace coupling
B-110A	CM	IE	0	6	006741	004548	Spool piece leaks	Replace spool piece
B-110A	CM	BF	0	4	006845	004531	WAC aftercooler leaks	replace gaskets
B-110B	CM	BF	5	4	005392	003563	Oil cooler leak	Replace elbow on cooler
B-320	CM	AT	0	12	001040	000965	Controls frozen	Replace switches, reseal controls
B-320	CM	NF	0	3	001393	001275	Blower case leaks	Repair case
B-320	CM	NF	0	1	001604	001402	Discharge elbow leaks	Replace gasket
B-510A	CM	MF	0	4	000525	000413	Compressor leaks oil	Replace gasket
B-510A		NF	0	8	005506	003651	Oil cooler leaking	Replace seal
B-510A	CM	BF	0	9	005620	003804	Oil cooler broken	Replace cooling fan
B-510A	CM	NF	0	2.5	005752	003824	Thermostat leaks oil	Replace o-ring

See Last Page for Legend of Abbreviations

Appendix H -Major Equipment Repair History

EQUIPMENT ID	TYPE	FAILURE	DOWN TIME	REPAIR TIME	HIST #	WO #	FAILURE DESCRIPTION	WORK
B-510A	CM	BF	0	10	005807	003652	Cooling fan leaks oil	Replace seal
B-520A	CM	NF	13	12	000819	000839	Blower housing fan failure	Replace housing fan
B-520A	CM	NF	2	0.8	001265	001157	Discharge safety valve failure	Replace valve
B-520A	CM	NF	3	6.3	002327	001864	Unloading station hose leak	Replace hose
B-520A	CM	WP	6	2	002718	002131	Air supply hose wear	Replace hose
B-520A	CM	NF	1	2	004179	003069	Unloading station hose wear	Replace hose
B-520A	CM	NF	0	6	004920	003323	Unloading station hose wear	Replace hose
B-520A	EM	MF	0	0.3	005052	003479	Air filter plugged	Replace filter
B-520A	CM	NF	0	1.75	005113	003512	Unloading station hose wear	Replace hose
B-520A	CM	ER	0	1.5	005633	003807	Air supply hose wear	Replace hose
B-520A	CM	DE	0	1.5	007285	004778	Unloading hose leaks	Replace hose
B-520A	CM	DE	0	2	007395	004812	Unloading hose leaks	Replace hose
B-520B	CM	NF	10	16	000806	000840	Blower housing fan failure	Replace housing fan
B-520C	CM	MF	0	3	000368	000414	Discharge safety valve leak	Repair valve
B-520C	CM	BF	0	4	001823	001580	Discharge safety valve leak	Replace valve
B-520C	CM	RD	0	0.5	002224	001822	Discharge safety valve failure	Replace valve
B-520C	EM	MF	0	15	002392	001926	Excessive unloading times	Replace diaphragm, cage, springs
B-520C	CM	MF	0	2	003009	002411	Unloading station hose leak	Replace hose
B-520C	CM	MF	0	0.5	003141	002535	Low discharge pressure	Replace galic clamp
B-520C	CM	NF	0	7	004739	003301	Pressure safety valve leak	Replace valve
B-520C	CM	NF	0	4	004760	003324	Unloading station hose wear	Replace hose
B-520C	CM	ER	11	2	005796	003808	Unloading station hose wear	Replace hose
B-520C	CM	NF	0	3	005837	003901	Pressure safety valve failure	Replace valve
C-310A	CM	AT	0	3.5	002413	001648	Belt tracking to side	Replace training roller assembly
C-310A	EM	BF	0	4	004606	003266	Scraper broken	Replace scraper
C-310A	CM	ER	0	6	004821	003365	Conveyor chute cracked	Weld cracks
C-310A	CM	NF	1	12	006345	004227	Two rollers stuck	Replace rollers
C-310A	CM	BF	0	3	006754	004417	Chute cracked	Weld chute
C-310A-M1	SD	MF	0	6	001348	001105	Gearbox leaking oil	Replace oil seal
C-310B	CM	AT	0	6	000650	000739	Capacitor loose in air cannon	Resolder capacitor leads
C-310B	SD	MF	0	10	002674	001941	Conveyor belt worn	Replace belt
C-310B	CM	BF	0	8	003022	002235	Chute seam cracked	Weld cracks

See Last Page for Legend of Abbreviations

Appendix H -Major Equipment Repair History

EQUIPMENT ID	TYPE	FAILURE	DOWN TIME	REPAIR TIME	HIST #	WO #	FAILURE DESCRIPTION	WORK
C-310B	EM	AT	0	0.5	003326	002638	Air cannon misfiring	Replace circuit board
C-310B	CM	NF	0	1	003360	002660	Air cannon misfiring	Replace circuit board
C-310B	CM	NF	0	3	005172	003427	Scraper blades worn	Replace scraper
C-310B	CM	RD	1	12	005467	003712	Scraper worn	Replace scraper
C-310B	CM	NF	0	6	006359	004232	Rubber damage to scraper	Repair rubber
C-311	CM	DE	0	6	000715	000723	Crack in discharge chute	Weld cracks
C-311	CM	NF	0	6	000969	000994	Crack in discharge chute	Weld cracks
C-311	EM	NF	0	7.5	001793	001544	Conveyor would not run	Replace bad micro-switch
C-311	CM	MF	0	4	001828	001528	Crack in discharge chute	Weld cracks
C-311	CM	BF	0	0.5	003695	002865	Zero speed switch broken	Replace switch
C-311	CM	NF	0	4	005017	003420	Idler bearings worn	Replace bearings
C-311	CM	AT	0	2	005729	003799	Roller bearings worn	Replace bearings
C-311	CM	NF	1	16	006346	004050	Scraper worn	Replace scraper
C-311	CM	NF	0	8	006362	004078	Cleaning brush worn	Replace brush
C-311	CM	NF	0	2	006524	004142	Rubber damage to scraper	Repair rubber
C-311	CM	NF	0	12	006789	004566	Three rollers stuck	Replace rollers
C-312	SD	IE	0	2	000409	000295	Skirt torn	Replace skirt
C-312	SD	DE	0	8	001342	001253	Belt worn	Replace belt
C-312	CM	IE	0	11	001389	001288	Belt not tracking correctly	Replace scrapers
C-312	CM	NF	0	10	003374	002624	Belt worn	Replace belt
C-312	SD	MF	0	8	004311	002635	Belt worn	Replace belt
C-312	CM	NF	0	1	004591	003256	Scrapers worn	Replace scrapers
C-312	SD	BF	1	15	005483	003721	Rollers need replacing	Replace five rollers
C-312	CM	NF	0	1	006466	004076	Scraper worn	Replace scraper
C-312	CM	BF	0	1.5	006530	004298	Guilder arm broken	Replace arm
C-312	EM	NF	1	17	006546	004305	Pulley bearing bad	Replace bearing
C-313	SD	NF	0	8	001616	001334	Belt worn	Replace belt
C-313	CM	BF	0	1.3	005797	003812	Roller broken	Replace roller
CHIPPER	EM	OE	0	2	003059	002490	Drive motor burned up	Replace motor
CHIPPER	EM	DE	0	4	003358	002658	Conveyor belts broken	Replace belt
CHIPPER	CM	NF	1	24	003636	002694	Screw noisy	Replace bearings
CHIPPER	CM	NF	0	1	005207	003537	Tunnel ID fan belts worn	Replace belt

See Last Page for Legend of Abbreviations

Appendix H -Major Equipment Repair History

EQUIPMENT ID	TYPE	FAILURE	DOWN TIME	REPAIR TIME	HIST #	WO #	FAILURE DESCRIPTION	WORK
CHIPPER	CM	BF	0	8	005808	003783	Pulley bearing broken	Replace bearing
DRUM	CM	BF	0	6	007080	004674	Wash flow indicator broken	Replace indicator
DRUM	CM	RD	2	16	007267	004712	Level transmitter malfunction	Replace level indicator
DRUM	CM	NF	0	4	007299	004768	Cooling water line leaks	Repair line
DUCTWORK	CM	AT	0	6	001893	001375	Flanges leak	Replace three flanges
DUCTWORK	CM	AT	0	12	004539	003211	Injection nozzle clogged	Replace injection nozzles
DUCTWORK	CM	AT	0	3	006896	004576	Test ports leak	Replace ports
E-120	SD	DE	1	48	000418	000474	Drains leaking	Replace drains
E-120	CM	BF	6	4	000775	000857	Valve leaking	Replace valve stem
E-120	CM	NF	0	3.5	000781	000873	Valve leaking	Replace valve
E-120	SD	MF	0	6	003046	002079	Nozzles broken	Replace nozzles
ELB-1	CM	ER	0	6	002335	001897	Discharge flange leaks	Weld patch on flange
ELB-1	CM	MF	0	10	003045	001900	Elbow leaks	Replace elbow
ELECTGENE	EM	BF	0	1	001631	001416	Electrical receipt smoked	Replace electrical receipt
ELECTGENE	CM	MF	0	2	004454	003170	Bailey bad boards	Replace terminator board
EMERLITE	CM	PL	0	3	005089	005089	WWT#17 light not working	Replace batteries
EMERLITE	CM	MF	0	4	005839	003818	Dewater #9 light not working	Replace circuit board
EXP-102	SD	DE	6	192	003601	002778	Expansion joint leaking	Replace bottom of joint
EXP-102	SD	AT	0	7	006894	004292	Test ports leak	Replace ports
EXP-103	CM	BF	0	12	001285	000978	Expansion joint drain leaking	Replace drain line
EXP-105	CM	BF	4	130	003375	002637	Expansion joint leaking	Repair joint
EXP-106	SD	MF	0	4	005016	002233	Expansion joint leaking	Replace joint
EXP-107	SD	NF	0	11.5	004510	002779	Expansion joint leaking	Repair joint
EXP-108	SD	MF	0	12	004331	003043	Expansion joint leaking	Reseal joint
EXP-109	CM	IE	0	6	001634	001323	Expansion joint leaking	Repair joint
EXP-109	SD	MF	0	12	004332	001989	Expansion joint leaking	Tighten joint
EXP-109	SD	ER	0	2	005301	003567	Expansion joint leaking	Repair joint
EXP-109	SD	NF	0	9	005503	003663	Expansion joint deteriorating	Replace joint
EXP-110	SD	MF	0	12	004333	001918	Expansion joint leaking	Repair joint
FAS	CM	NF	0	6	001674	001433	Water line leaks	Replace packing
FT-127	CM	NF	0	1.8	006235	004112	Sensor module failure	Replace sensor
FV-191	EM	DE	0	2	000298	000356	Leaking spool piece	Replace spool piece

See Last Page for Legend of Abbreviations

Appendix H -Major Equipment Repair History

EQUIPMENT ID	TYPE	FAILURE	DOWN TIME	REPAIR TIME	HIST #	WO #	FAILURE DESCRIPTION	WORK
FV-191	CM	MF	0	4	007279	004781	Outlet flange leaks	Replace gasket
FV-236	CM	ER	0	6.5	004080	003033	Valve would not operate	Replace valve
GENERALWE	CM	NF	0	0.75	001846	001595	Broken heat trace box	Repair heat trace box
GENERALWE	CM	PL	0	5	001921	001584	High flow alarm	Replace amp boards
GENERALWE	CM	ER	0	8	004907	003400	WES nozzles plugged	Clean nozzles
H-610A	CM	NF	0	0.5	002785	002171	Packing leak	Replace packing
H-610B	CM	ER	0	1.5	005435	003664	Valve leak	Replace valve
ID-1	CM	ER	0	10	001930	001632	Flanges leak	Replace flanges
ID-6	SD	DE	0	2	002066	001599	Manway leaks	Replace gasket
K-600A	CM	MF	0	0.25	000478	000521	Pressure gauge hose leaks	Replace gauge
K-600A	EM	NF	0	0.5	000702	000795	Pressure gauge hose leaks	Replace gauge
K-600A	CM	NF	0	1.5	001095	001077	Discharge water line leaks	Replace line
K-600A	CM	DE	0	1	001754	001168	Relief valve leaks	Replace relief valve
K-600A	CM	NF	0	1.5	005704	003820	Pressure gauge reading high	Replace gauge
K-600B	CM	NF	0	1.5	000958	000979	Cooling hose leak	Replace line
K-600B	EM	NF	0	15	002831	002206	Control valve malfunction	Replace diaphragm, gaskets
K-600B	CM	BF	0	2	002973	000222	Cooling hose corroded	Replace line
K-600B	CM	NF	0	6	005828	003892	Casing leaks oil	Repair leak
K-600B	CM	NF	1	21	006848	004588	Flow vent not sealed	Repair valve
LT-194	CM	NF	0	1.5	001829	001569	Rotometer broken	Replace meter inlet valve
LT-239	EM	NF	0	4	006784	004562	Fitting leaks	Replace fitting
LT-239	CM	BF	0	0.5	006997	004592	Rotometer cracked	Replace rotometer tube
LV-129	EM	BF	0	16	002521	002003	Valve would not open	Replace actuator
LV-129	CM	BF	0	2	002858	002213	Valve would not open	Replace ball
LV-129	CM	NF	0	2.5	004904	003231	Valve sticks	Replace packing
LV-129	CM	ER	0	8	006529	004240	Valve stuck	Repair valve
M-300A	CM	MF	2	6	000457	000501	Cracked filtrate chute	Repair using welds
M-300A	CM	BF	3	6	000483	000552	Knife actuator broken	Replace hydraulic cylinder piston end
M-300A	CM	NF	0	2	000955	000989	Cake thickness spring broken	Replace cake thickness spring
M-300A	CM	BF	0	2	001029	001004	Cake thickness switch broken	Replace cake thickness switch
M-300A	EM	BF	0	1	001053	001041	Cake thickness spring broken	Replace cake thickness spring
M-300A	CM	BF	0	6	001326	001230	Cake thickness switch, screen band broken	Replace cake thickness switch, band

See Last Page for Legend of Abbreviations

Appendix H -Major Equipment Repair History

EQUIPMENT ID	TYPE	FAILURE	DOWN TIME	REPAIR TIME	HIST #	WO #	FAILURE DESCRIPTION	WORK
M-300A	CM	IE	1	16	001380	001263	Screen broken	Replace screen
M-300A	CM	BF	3	4	001454	001299	Cake thickness switch broken	Replace cake thickness switch
M-300A	EM	BF	1	1	001710	001461	Cake thickness switch arm broken	Replace cake thickness switch arm
M-300A	CM	DE	0	1	001723	001469	Cake thickness switch arm broken	Replace cake thickness switch arm
M-300A	EM	BF	0	1	001916	001644	Cake thickness switch broken	Replace cake thickness switch
M-300A	EM	BF	0	3	001963	001673	Cake thickness switch broken	Replace cake thickness switch
M-300A	CM	NF	0	1	001973	001682	Hole in screen	Repair screen
M-300A	EM	NF	0	0.25	002069	001746	Cake thickness spring broken	Replace cake thickness spring
M-300A	CM	ER	4	24	002077	001707	Screen damaged	Replace screen, repair basket rubber
M-300A	EM	BF	0	1.5	002100	001766	Cake thickness switch broken	Replace cake thickness switch
M-300A	EM	BF	0	1	002123	001781	Cake thickness switch broken	Replace cake thickness switch
M-300A	CM	DE	0	1	002180	001821	Cake thickness switch arm broken	Replace cake thickness switch arm
M-300A	CM	ER	0	2	002223	001820	Worn knife blade	Replace knife blade
M-300A	EM	BF	0	4	003110	002518	Upper retaining ring loose	Replace upper retaining ring
M-300A	EM	NF	0	1	003583	002811	Cake thickness switch arm loose	Replace hold down tab assembly
M-300A	CM	MF	0	2	004227	003088	Hatch leak	Replace hatch gasket
M-300A	CM	BF	0	1	004763	003317	Hatch leak	Replace hatch gasket
M-300A	CM	NF	0	4	005381	003539	Rubber damage to spokes	Repair rubber
M-300A	EM	BF	0	1	005450	003707	Cake thickness switch broken	Replace cake thickness switch
M-300A	CM	ER	0	4	005787	003868	Feed reducer leaks	Replace feed spool piece
M-300A	CM	NF	0	3	006522	004137	Rubber damage to spokes	Repair rubber
M-300A	CM	DE	0	6	006541	004286	Valve leaks	Replace valve
M-300A	CM	NF	0	1	006739	004545	Knife actuator air hose leaks	Replace air hose
M-300A	CM	NF	0	8	006948	004629	Hole in screen	Repair screen
M-300A	CM	ER	0	8	006960	004622	Rubber damage to spokes	Repair rubber
M-300A	CM	NF	0	4.5	006995	004649	Hole in screen	Repair screen
M-300A	CM	BF	0	4	007123	004685	Hole in screen	Repair screen
M-300A	CM	MF	0	2	007288	004782	Brakes inoperative	Tighten brake assembly
M-300A	CM	ER	0	6	007334	004755	Rinse pipe worn	Repair rise pipe
M-300A	CM	NF	0	7	007622	004841	Feed valve eroded	Replace valve
M-300B	CM	RD	1	1	000600	000691	Filtrate discharge hose plugged	Replace filtrate discharge hose
M-300B	CM	BF	0	1	000760	000844	Tab on limit switch broke	Repair tab with weld

See Last Page for Legend of Abbreviations

Appendix H -Major Equipment Repair History

EQUIPMENT ID	TYPE	FAILURE	DOWN TIME	REPAIR TIME	HIST #	WO #	FAILURE DESCRIPTION	WORK
M-300B	EM	NF	0	0.5	000931	000971	Cake thickness switch broken	Replace cake thickness switch spring
M-300B	CM	RD	4	2	000944	000955	Motor terminal leads worn	Tape leads, line terminal box with rubber
M-300B	EM	BF	0	0.5	001010	001024	Cake thickness switch broken	Replace cake thickness switch spring
M-300B	CM	DE	0	4	001116	001045	Cake thickness switch broken	Replace cake thickness switch
M-300B	CM	BF	0	10	001136	001037	Screen damaged	Replace screen
M-300B	EM	NF	0	0.5	001206	001129	Defective speed relay	Replace speed relay
M-300B	EM	BF	0	0.5	001331	001233	Cake thickness switch broken	Replace cake thickness switch spring
M-300B	CM	IE	0	1	001647	001429	Damaged proximity switch wires	Replace proximity switch wires
M-300B	CM	ER	15	28	002181	001755	Basket and knife damaged by screen	Replace basket, knife, screen
M-300B	CM	DE	0	1	002744	002160	Knife regulator leaking	Replace knife regulator
M-300B	CM	BF	24	32	002751	002061	Damaged screen, cloth, filter	Replace screen, cloth, filter
M-300B	CM	OE	3	1.5	003363	002640	Chute indicating tab broke	Replace chute indicating tab
M-300B	CM	NF	49	3	004131	002589	Rubber damage to spokes	Repair rubber
M-300B	CM	BF	0	1.5	005112	003514	Rubber damage, proximity switch failure	Repair rubber, replace switch
M-300B	CM	NF	0	2	005375	003199	Rubber damage to spokes	Repair rubber
M-300B	EM	BF	0	0.25	005822	003887	Cake thickness switch broken	Replace cake thickness switch spring
M-300B	EM	NF	0	0.5	006425	004261	Cake thickness switch spring broken	Replace cake thickness switch spring
M-300B	CM	NF	0	2.6	006465	004068	Hole in screen	Repair screen
M-300B	CM	MF	0	2	006482	004289	Feed spool piece leaks	Replace spool piece
M-300B	EM	BF	0	1	006560	004314	Cake thickness switch broken	Replace cake thickness switch
M-300B	CM	BF	0	0.5	006575	004307	Cake thickness switch spring broken	Replace cake thickness switch spring
M-300B	CM	NF	0	12.5	006606	004341	Screen torn	Replace screen
M-300B	EM	NF	0	0.25	006931	004625	Cake thickness switch spring broken	Replace cake thickness switch spring
M-300B	CM	ER	3	23	007402	004756	Rinse pipe worn	Repair rise pipe
M-300B	CM	ER	0	6	007647	004840	Feed valve eroded	Replace valve
M-300C	CM	MF	0	1	000910	000947	Cake thickness switch spring broken	Replace cake thickness switch spring
M-300C	EM	DE	0	0.3	000933	000974	Cake thickness switch broke	Replace cake thickness switch
M-300C	EM	DE	0	8	000934	000975	Knife actuator piston end broke	Replace actuator piston end
M-300C	CM	RD	4	2	000945	000956	Motor terminal leads worn	Tape leads, line terminal box with rubber
M-300C	EM	BF	0	1	001054	001042	Cake thickness spring broke	Replace cake thickness switch spring
M-300C	EM	BF	0	0.5	001253	001175	Cake thickness spring broke	Replace cake thickness switch spring
M-300C	CM	BF	0	3	001282	001188	Cake thickness switch broken	Replace cake thickness switch

See Last Page for Legend of Abbreviations

Appendix H -Major Equipment Repair History

EQUIPMENT ID	TYPE	FAILURE	DOWN TIME	REPAIR TIME	HIST #	WO #	FAILURE DESCRIPTION	WORK
M-300C	CM	DE	0	1.5	001366	001266	Cake thickness switch broken	Replace cake thickness switch
M-300C	CM	BF	0	3	001577	001382	Cake thickness switch arm broken	Replace cake thickness switch arm
M-300C	CM	BF	0	0.1	001866	001578	Burned out control light	Replace bulb
M-300C	CM	ER	0	14	002076	001736	Rubber damage to spokes	Repair rubber damage
M-300C	EM	BF	0	0.5	002161	001809	Cake thickness spring broke	Replace cake thickness switch spring
M-300C	CM	NF	0	2	002217	001834	Screen band fallen	Raise and tighten band
M-300C	CM	NF	1	4	002570	002013	Backing plate on retainer missing	Replace backing plate
M-300C	CM	BF	0	1	002743	002156	Cake thickness switch arm broken	Replace cake thickness switch arm
M-300C	CM	NF	0	2	002830	002205	Screen band fallen	Raise and tighten band
M-300C	EM	BF	0	1.5	003263	002583	Cake thickness spring backing plate missing	Replace backing plate
M-300C	CM	ER	20	8	003297	002509	Inlet slurry line leak	Repair inlet slurry line
M-300C	CM	MF	0	5	003612	002810	Cake thickness switch arm broken	Replace cake thickness switch arm
M-300C	CM	NF	0	3	003697	002867	Ground fault	Repair damaged leads
M-300C	CM	IE	4	1	003777	002859	Ground fault	Repair damaged leads
M-300C	CM	MF	0	4	003914	002951	Wash valve malfunction	Replace air port directing block
M-300C	CM	NF	0	1	003917	002956	Screen band fallen	Raise and tighten band
M-300C	CM	NF	49	3	004129	002597	Rubber damage to spokes	Repair rubber damage
M-300C	CM	NF	0	1	004130	003057	Rubber damage to spokes	Repair rubber damage
M-300C	CM	NF	1	9	004237	003091	Rubber damage to spokes	Repair rubber damage
M-300C	CM	NF	0	3	004504	003184	Screen band fallen	Raise and tighten band
M-300C	EM	NF	0	2.45	004514	003212	Chute proximity switch broken	Replace chute proximity switch
M-300C	EM	NF	0	0.5	004808	003375	Cake thickness spring broke	Replace cake thickness switch spring
M-300C	CM	NF	0	6	004848	003369	Discharge spool leak	Repair spool
M-300C	CM	BF	5	36	005008	003314	Centrifuge will not run	Replace CCRA card
M-300C	CM	BF	74	8	005054	003185	Centrifuge will not restart	Replace CCRA card
M-300C	CM	NF	0	3	005361	003622	Screen band fallen	Raise and tighten band
M-300C	CM	NF	0	3	005449	003703	Leaking filtrate wash line	Repair wash line
M-300C	CM	ER	1	3.7	005655	003809	Rubber damage to spokes	Repair rubber damage
M-300C	EM	MF	0	0.5	005679	003821	Cake thickness spring broke	Replace cake thickness switch spring
M-300C	CM	NF	0	2	006262	004125	Screen damaged	Repair screen
M-300C	CM	NF	0	3	006308	004217	Hole in screen	Repair screen
M-300C	CM	NF	0	6	006403	004235	Hole in screen	Repair screen

See Last Page for Legend of Abbreviations

Appendix H -Major Equipment Repair History

EQUIPMENT ID	TYPE	FAILURE	DOWN TIME	REPAIR TIME	HIST #	WO #	FAILURE DESCRIPTION	WORK
M-300C	EM	BF	0	0.5	006561	004315	Cake thickness switch spring broken	Replace cake thickness switch spring
M-300C	CM	NF	0	2.5	006605	004359	Screen band damaged	Repair screen band
M-300C	EM	MF	0	0.25	006652	004406	Cake thickness switch broken	Replace cake thickness switch
M-300C	EM	MF	0	0.75	006742	004549	Cake thickness switch broken	Replace cake thickness switch
M-300C	EM	NF	0	0.5	006950	004634	Cake thickness switch spring broken	Replace cake thickness switch spring
M-300C	EM	MF	0	1	007197	004732	Chute position tab broken	Repair chute position tab
M-300C	EM	NF	0	0.5	007230	004743	Cake thickness switch spring broken	Replace cake thickness switch spring
M-300C	CM	NF	0	1.5	007385	004818	Spool piece leaks	Replace spool piece
M-300C	EM	ER	0	1	007386	004826	Feed spool piece leaks	Replace spool piece
M-300C	CM	ER	0	11	007415	004757	Rinse pipe worn	Repair rise pipe
M-300C	EM	NF	0	0.25	007545	004947	Valve handle broken	Replace valve
M-300D	CM	BF	0	2	000764	000855	Leaking filtrate line	Replace filtrate line
M-300D	EM	MF	0	0.5	000911	000949	Ground fault in motor leads	Retape leads
M-300D	EM	NF	0	1.5	000928	000962	Ground fault in motor leads	Retape leads
M-300D	CM	BF	2	18.5	001120	001086	Screen damaged	Replace screen
M-300D	EM	MF	0	0.5	001941	001660	Cake thickness spring broke	Replace cake thickness switch spring
M-300D	CM	ER	21	27	002102	001737	Rubber damage to basket	Repair rubber damage to basket
M-300D	EM	BF	1	0.5	002124	001782	Cake thickness switch spring broke	Replace cake thickness switch spring
M-300D	EM	BF	0	1	002719	002137	Cake thickness switch spring broke	Replace cake thickness switch spring
M-300D	CM	NF	0	12	002855	002188	Screen loose	Tighten screen
M-300D	EM	BF	0	1.5	003264	002584	Cake thickness switch arm broken	Replace cake thickness switch arm
M-300D	EM	BF	0	1.5	003584	002812	Cake thickness switch arm support broken	Replace cake thickness switch arm support
M-300D	EM	NF	0	0.5	003641	002832	Cake thickness switch spring broke	Replace cake thickness switch spring
M-300D	CM	NF	1	2	004741	003166	Solenoid on chute actuator failed	Replace solenoid on chute actuator
M-300D	CM	NF	0	17	004979	003414	Pinch valve on hose leaking	Replace valve seal
M-300D	CM	BF	5	15	005007	003315	Centrifuge would not run	Replace CCRA card
M-300D	EM	NF	0	2.5	005084	003505	Cake thickness switch spring broke	Replace cake thickness switch spring
M-300D	CM	NF	0	4	005129	003305	Wheel on chute worn	Replace wheel and axle
M-300D	CM	NF	11	0.3	005164	003468	Centrifuge lid leaking	Replace seal
M-300D	CM	BF	0	0.5	005252	003558	Cake thickness switch broke	Replace cake thickness switch
M-300D	CM	ER	1	3.2	005656	003810	Rubber damage to spokes	Repair rubber damage to spokes
M-300D	EM	NF	1	1	005836	003900	Cake thickness switch spring broke	Replace cake thickness switch spring

See Last Page for Legend of Abbreviations

Appendix H -Major Equipment Repair History

EQUIPMENT ID	TYPE	FAILURE	DOWN TIME	REPAIR TIME	HIST #	WO #	FAILURE DESCRIPTION	WORK
M-300D	CM	NF	0	0.5	005939	003955	Cake thickness spring broke	Replace cake thickness switch spring
M-300D	CM	BF	0	11	006307	004211	Lower bearings bad	Replace lower bearings
M-300D	EM	BF	0	4	006442	004267	Chute indicator tab broken	Repair chute indicator tab
M-300D	CM	MF	0	1	006451	004274	Lid leaks	Replace lid seal
M-300D	CM	NF	0	6	006523	004138	Hole in screen	Repair screen
M-300D	CM	ER	0	6	006897	004550	Screen torn	Reapply screen
M-300D	EM	BF	0	8	006990	004654	Knife actuator piston end broken	Replace knife actuator piston end
M-300D	CM	BF	0	6	007118	004700	Screen torn	Reapply screen
M-300D	EM	BF	0	2	007208	004737	Flush line broken	Repair flush line
M-300D	CM	NF	0	0.5	007214	004733	Lid leaks	Replace lid seal
M-300D	CM	ER	0	7.5	007335	004758	Rinse pipe worn	Repair rinse pipe
M-300D	CM	ER	1	12	007346	004795	Rubber damage to spokes	Repair rubber
M-300D	EM	DE	0	0.25	007418	004851	Cake thickness switch spring broken	Replace cake thickness switch spring
M-300D	CM	BF	0	4	007559	004866	Blower shaft broken	Replace shaft
M-300D	CM	ER	0	6	007648	004844	Feed valve eroded	Replace valve
M-300E	CM	DE	1	0.5	000231	000224	Cake thickness switch spring broke	Replace cake thickness switch spring
M-300E	CM	RD	4	2	000946	000957	Ground fault in motor leads	Retape leads
M-300E	CM	NF	0	0.5	001229	001152	Filtrate drain hose leak	Replace filtrate drain hose
M-300E	CM	NF	0	3	001450	001309	Proximity switch flag broke	Weld flag to chute
M-300E	CM	BF	0	2.5	001565	001373	Proximity switch tab broke	Weld tab to chute
M-300E	CM	BF	1	3	001897	001606	VFD linkage broke	Repair VFD linkage
M-300E	CM	NF	3	24	002104	001738	Rubber damage to spokes	Repair rubber damage
M-300E	CM	NF	8	1	004060	002957	Air port directing block failure	Repair air port directing block
M-300E	CM	ER	3	3	004263	003093	Rubber damage to spokes	Repair rubber damage
M-300E	EM	NF	0	0.5	004498	003204	Cake thickness switch spring broke	Replace cake thickness switch spring
M-300E	EM	BF	0	0.5	004793	003367	Cake thickness switch spring broke	Replace cake thickness switch spring
M-300E	EM	BF	0	0.5	004919	003399	Cake thickness switch spring broke	Replace cake thickness switch spring
M-300E	EM	BF	0	1	005024	003461	Cake thickness arm broke	Replace cake thickness switch arm
M-300E	EM	NF	0	1.5	005108	003515	Chute sump indication will not clear	Replace proximity switch
M-300E	CM	NF	11	0.3	005165	003469	Lid leaking	Reseal lid
M-300E	CM	NF	1	5	005219	003535	Rubber damage to spokes	Repair rubber damage
M-300E	CM	NF	17	2	005221	003480	Slurry feed line leak	Replace feed line gasket

See Last Page for Legend of Abbreviations

Appendix H -Major Equipment Repair History

EQUIPMENT ID	TYPE	FAILURE	DOWN TIME	REPAIR TIME	HIST #	WO #	FAILURE DESCRIPTION	WORK
M-300E	CM	NF	0	2	005362	003624	Rubber damage to spokes	Repair rubber damage
M-300E	EM	NF	0	1.5	005430	003677	Knife actuator arm broke	Replace knife actuator arm
M-300E	EM	NF	0	2	005432	003680	Piston end stud broke	Replace piston end stud
M-300E	CM	ER	48	25	005802	003660	Erosion of centrifuge cover	Repair rubber erosion
M-300E	EM	NF	0	1	005835	003899	Cake thickness switch spring broke	Replace cake thickness switch spring
M-300E	CM	BF	0	6	006864	004551	Knife close to hub	Replace retract stop
M-300E	EM	BF	0	0	006871	004593	Cake thickness switch spring broken	Replace cake thickness switch spring
M-300E	EM	NF	0	0.5	006970	004640	Cake thickness switch spring broken	Replace cake thickness switch spring
M-300E	CM	MF	0	3	007005	004540	Rubber damage to basket	Repair rubber
M-300E	CM	BF	1	24	007158	004689	Top assembly bent	Replace top assembly
M-300E	CM	ER	0	5	007403	004759	Rinse pipe worn	Repair rinse pipe
M-300E	EM	BF	0	4	007405	004835	Wash valve failed	Replace wash valve
M-300E	EM	MF	0	0.5	007450	004882	Cake thickness switch spring broken	Replace cake thickness switch spring
M-300F	CM	BF	0	1	000427	000496	Air regulator for chute ram broke	Replace air regulator for chute ram
M-300F	CM	MF	0	16	000454	000499	Stress crack in chute	Weld chute
M-300F	CM	NF	3	1	000477	000497	Chute moves too slowly	Replace solenoid
M-300F	CM	NF	0	5	001284	001185	Retaining ring fell off	Replace retaining ring
M-300F	CM	MF	0	2	001551	001367	Knife would not retract	Replace proximity switch
M-300F	CM	ER	6	40	002132	001739	Rubber damage to basket	Repair rubber
M-300F	CM	DE	0	2	004261	003101	Retaining band bent	Replace retaining ring
M-300F	CM	NF	0	12	004610	003263	Screen damaged	Replace screen
M-300F	CM	AT	0	4	006859	004354	Rinse valve leaks	Repair valve
M-300F	CM	BF	0	6	007159	004353	Knife position actuator leaking oil	Repair actuator
M-300F	CM	BF	210	75	007171	003292	Motor would not start	Replace frayed wires
M-300G	CM	RD	0	4	000220	000246	Filtrate drain pipe cracked	Repair filtrate drain pipe
M-300G	CM	MF	0	6	000458	000500	Stress crack in chute	Weld chute
M-300G	CM	BF	1	5	000978	000999	Cake thickness switch arm broke	Replace cake thickness switch arm
M-300G	CM	BF	2	4	001050	001029	Cake thickness switch arm broke	Replace cake thickness switch arm
M-300G	CM	BF	0	6	001098	001085	Cake thickness switch broke	Replace cake thickness switch
M-300G	EM	BF	0	0.25	001118	001102	Cake thickness switch spring broke	Replace cake thickness switch spring
M-300G	CM	DE	0	1	001223	001144	Cake thickness switch arm broke	Replace cake thickness switch arm
M-300G	CM	DE	0	1.5	001367	001265	Cake thickness switch arm broke	Replace cake thickness switch arm

See Last Page for Legend of Abbreviations

Appendix H -Major Equipment Repair History

EQUIPMENT ID	TYPE	FAILURE	DOWN TIME	REPAIR TIME	HIST #	WO #	FAILURE DESCRIPTION	WORK
M-300G	CM	BF	1	1	001416	001290	Cake thickness switch broke	Replace cake thickness switch
M-300G	CM	NF	0	5.5	001465	001303	Screen torn	Replace screen
M-300G	CM	OE	0	2	001478	001314	Cake thickness switch broke	Replace cake thickness switch
M-300G	CM	BF	0	1	001711	001462	Cake thickness switch arm broke	Replace cake thickness switch arm
M-300G	CM	DE	0	1	001722	001471	Cake thickness switch broke	Replace cake thickness switch
M-300G	EM	BF	0	1	001859	001618	Cake thickness switch arm loose	Repair cake thickness switch arm
M-300G	EM	OE	0	1	001970	001678	Cake thickness switch spring broke	Replace cake thickness switch spring
M-300G	CM	ER	12	41	002182	001748	Rubber damage to basket	Repair rubber damage
M-300G	CM	BF	0	1	002945	002252	Cake thickness switch arm broke	Replace cake thickness switch arm
M-300G	CM	BF	1	1	002952	002251	Cake thickness switch arm broke	Replace cake thickness switch arm
M-300G	EM	BF	0	4	003109	002516	Turnbuckle broken	Replace turnbuckle
M-300G	EM	BF	0	0.25	004059	003034	Cake thickness switch spring broke	Replace cake thickness switch spring
M-300G	CM	ER	0	3	004679	003290	Reducer spool leak	Replace reducer spool
M-300G	EM	BF	0	2	004785	003362	Cake thickness switch broke	Replace cake thickness switch
M-300G	EM	BF	0	2	004787	003364	Cake thickness switch broke	Replace cake thickness switch
M-300G	EM	BF	0	0.5	004791	003366	Cake thickness switch spring broke	Replace cake thickness switch spring
M-300G	CM	BF	0	2	004828	003372	Cake thickness switch broke	Replace cake thickness switch
M-300G	EM	NF	0	0.45	005049	003447	Cake thickness switch arm broke	Replace cake thickness switch arm
M-300G	CM	BF	5	2	005209	003441	Cake thickness switch broke	Replace cake thickness switch
M-300G	CM	BF	0	0.5	005251	003557	Cake thickness switch spring broke	Replace cake thickness switch spring
M-300G	EM	NF	0	1	006527	004294	Cake thickness switch spring broken	Replace spring
M-300G	CM	NF	0	7	006740	004547	Centrifuge would not scrape	Replace chute location relay
M-300G	CM	MF	0	4	007298	004788	Centrifuge runs slow	Replace prox switch
M-300G	CM	ER	0	5	007392	004760	Rinse pipe worn	Replace rinse pipe
M-300G	CM	NF	0	2	007540	004942	Zero speed alarm	Replace proxy switch
M-300G	EM	NF	0	0.3	007544	004946	Cake thickness switch spring broken	Replace cake thickness switch spring
M-300G	CM	ER	1	5	007632	004976	Feed valve leaking	Replace valve
M-300H	EM	NF	0	1	000149	000225	Cake thickness switch spring broke	Replace cake thickness switch spring
M-300H	EM	BF	0	1	001055	001043	Cake thickness switch spring broke	Replace cake thickness switch spring
M-300H	EM	BF	0	2	001868	001621	Cake thickness switch broke	Replace cake thickness switch
M-300H	EM	BF	0	2	001956	001620	Cake thickness switch broke	Replace cake thickness switch
M-300H	CM	DE	0	1	001998	001704	Cake thickness switch stopper broke	Replace thickness switch stopper

See Last Page for Legend of Abbreviations

Appendix H -Major Equipment Repair History

EQUIPMENT ID	TYPE	FAILURE	DOWN TIME	REPAIR TIME	HIST #	WO #	FAILURE DESCRIPTION	WORK
M-300H	CM	ER	2	31	002133	001741	Rubber damage to basket	Repair rubber
M-300H	CM	NF	0	0.5	002457	001967	Cake thickness switch spring broke	Replace cake thickness switch spring
M-300H	CM	IE	0	10	002836	002207	Centrifuge would not run	Replace centrifuge circuit breaker
M-300H	EM	DE	0	4.5	002857	002214	Centrifuge would not run	Replace shaft for VFD actuator
M-300H	EM	BF	0	2	002909	002239	Cake thickness switch spring broke	Replace cake thickness switch
M-300H	CM	NF	0	5	003103	002508	Screen damage	Replace screen
M-300H	CM	BF	0	6	003273	002585	Cake thickness switch broke	Replace cake thickness switch
M-300H	CM	NF	3	0.75	003427	002689	Door latch broken	Replace door latch
M-300H	CM	BF	1	1.4	003610	002802	Cake thickness switch broke	Replace cake thickness switch
M-300H	EM	MF	0	1	003916	002959	Cake thickness switch spring broke	Replace cake thickness switch
M-300H	CM	NF	0	5	003956	002962	Cake thickness switch broke	Replace cake thickness switch
M-300H	CM	NF	0	1	004132	003058	Turnbuckles on retaining ring broke	Replace retaining ring
M-300H	EM	BF	0	2	004181	003078	Cake thickness switch spring broke	Replace cake thickness switch
M-300H	CM	BF	0	1	004489	003197	Chute tab broke	Weld tab on chute
M-300H	EM	NF	0	6	004659	003275	Centrifuge would not run	Replace CCRA card
M-300H	EM	BF	0	2	004786	003363	Cake thickness switch broke	Replace cake thickness switch
M-300H	CM	BF	0	3	004827	003371	Cake thickness switch broke	Replace cake thickness switch
M-300H	EM	BF	0	1.5	004849	003391	Cake thickness switch arm broke	Replace cake thickness switch arm
M-300H	CM	NF	10	30	005023	003398	Rubber damage to basket	Repair rubber
M-300H	EM	NF	0	2	005472	003718	Manway LED leaking	Replace gasket
M-300H	EM	BF	0	0.25	005823	003888	Cake thickness switch spring broke	Replace cake thickness switch spring
M-300H	EM	BF	0	5	006270	004189	Chute position tab broken	Repair chute position tab
M-300H	EM	NF	0	0.3	006398	004246	Cake thickness switch spring broken	Replace spring
M-300H	CM	NF	0	8	006454	004268	Hole in screen	Repair screen
M-300H	EM	MF	0	0.3	006617	004378	Cake thickness switch spring broken	Replace spring
M-300H	CM	NF	0	6	006655	004404	Hole in screen	Repair screen
M-300H	EM	BF	0	0.5	007240	004746	Cake thickness switch spring broken	Replace spring
M-300H	CM	ER	0	5	007391	004761	Rinse pipe worn	Replace rinse pipe
M-300H	CM	ER	0	0.5	007448	004874	Lid leaks	Replace lid gasket
M-300H	EM	NF	0	0.25	007546	004948	Valve handle broken	Replace valve
M-300I	CM	BF	1	6	001957	001634	Retaining ring plate damaged	Replace retaining ring plate
M-300I	CM	ER	2	30	002151	001742	Rubber damage to basket	Repair rubber damage

See Last Page for Legend of Abbreviations

Appendix H -Major Equipment Repair History

EQUIPMENT ID	TYPE	FAILURE	DOWN TIME	REPAIR TIME	HIST #	WO #	FAILURE DESCRIPTION	WORK
M-300I	CM	NF	7	1	002201	001804	Cake thickness switch broke	Replace cake thickness switch
M-300I	CM	MF	0	2.5	002565	002033	Wheel on chute broke	Replace wheel
M-300I	EM	BF	0	2	003108	002515	Retaining ring damaged	Replace retaining ring
M-300I	CM	DE	1	2	004239	003092	Screen damage	Repair screen
M-300I	CM	NF	59	4	004340	002598	Rubber damage to spokes	Repair rubber damage
M-300I	CM	DE	0	1.5	004374	003158	Proximity switch tab broke	Weld tab
M-300I	EM	NF	0	2	004420	003165	Chute solenoid valve leaking	Replace valve
M-300I	CM	NF	1	8	004490	003192	Screen damage	Replace screen
M-300I	EM	NF	0	1	004660	003276	Centrifuge would not run	Replace CCRA card
M-300I	CM	BF	4	12	004784	003316	Centrifuge would not run	Rep[lace CCRA card
M-300I	CM	NF	11	0.3	005166	003470	Lid leaking	Reseal lid
M-300I	CM	NF	9	5	005220	003475	Rubber damage to spokes	Repair rubber damage
M-300I	CM	IE	0	1	005318	003575	Filtrate pipe leaking	Repair filtrate pipe
M-300I	CM	ER	3	16	006260	004141	Rubber damage to spokes	Repair rubber
M-300I	CM	MF	0	11	006321	004219	Screen torn	Replace screen
M-300I	EM	BF	0	0.25	006653	004407	Cake thickness switch spring broken	Replace spring
M-300I	CM	BF	0	3	006677	004352	Knife would not retract	Replace knife actuator
M-300I	EM	NF	0	0.5	007231	004744	Cake thickness switch spring broken	Replace spring
M-300I	EM	NF	0	0.25	007292	004789	Cake thickness switch spring broken	Replace spring
M-300I	CM	ER	1	18	007329	004794	Rubber damage to spokes	Repair rubber
M-300I	CM	ER	0	6	007330	004762	Rinse pipe worn	Replace rinse pipe
M-300I	CM	NF	0	2	007505	004920	Zero speed alarm	Replace Fenner processor card
M-300I	CM	BF	0	2	007629	004960	Feed hose leaks	Replace gaskets
M-300I	CM	BF	1	10	007631	004970	Rubber damage to basket	Replace basket
M-300I	CM	ER	0	6	007665	004847	Feed valve eroded	Replace valve
M-500A	CM	RD	0	7	001534	001351	Aeration difficult to control	Replace air regulator
M-530A	CM	NF	0	1.2	001212	001128	Packing worn	Replace packing
M-530A	EM	NF	0	3	001810	001564	Packing leak	Replace packing
M-530A	CM	NF	0	2.5	001969	001671	Gear box oil leak	Replace o-ring, felt strap
M-530A	EM	ER	0	1	004151	003066	Discharge check valve failure	Replace discharge check valve
M-530B	CM	NF	0	2.5	000125	000159	Housing leak	Replace packing
M-530B	EM	WP	0	2	001013	001026	Oil seal leak	Replace seal, packing

See Last Page for Legend of Abbreviations

Appendix H -Major Equipment Repair History

EQUIPMENT ID	TYPE	FAILURE	DOWN TIME	REPAIR TIME	HIST #	WO #	FAILURE DESCRIPTION	WORK
M-530B	CM	NF	0	3	001032	001016	Motor drive oil leak	Replace seal, packing
M-530B	CM	NF	0	1.2	001288	001196	Packing leak	Replace packing
M-530B	SD	NF	8	16	001428	001220	Packing leak	Replace packing
M-530B	CM	NF	23	4	001688	001350	Oil seal leak	Replace packing
M-530B	CM	NF	2	8	001706	001438	Packing wear	Replace packing
M-530B	CM	RD	2	3	001806	001530	Packing wear	Replace packing
M-600A	CM	MF	0	3	003635	002820	Inlet valve worn	Replace valve
M-600A	CM	NF	0	4	004954	003411	Exhaust valve leaks	Replace valve
M-600A	CM	BF	0	3	005259	003556	Valve stuck closed	Replace valve
M-600A	CM	BF	0	1	005819	003879	Vent valve worn	Replace valve
M-600A	CM	NF	0	11	007074	004664	Filters corroded	Replace filters
M-600B	CM	BF	0	1	000534	000387	Outlet valve leaks	Replace valve
M-600B	CM	NF	0	2	000832	000656	Purge valve leaks	Repair valve
M-600B	CM	DE	0	6	003581	002751	Valve leaks	Replace valve
M-600B	CM	MF	0	5	004957	003407	Switch valve slow	Repair valve
M-600B	CM	AT	0	4	005720	003744	Top actuator leaks	Replace actuator
M-600B	CM	NF	0	2	006460	004279	Switching valve stuck	Repair valve
M-900	CM	ER	0	1	002023	001705	Filter press curtain failure	Repair mounting plate
M-900	CM	MF	0	9.5	007268	004729	Two plates cracked	Replace plates
M/E-1	SD	NF	0	0.5	001983	001691	Manway leaks	Replace gasket
M/E-2	SD	NF	0	0.5	001985	001692	Manway leaks	Replace gasket
NV-11	EM	AT	0	1	001804	001554	Limit switch broken	Replace limit switch
NV-124	CM	NF	0	1	000288	000341	Flush line leaks	Repair line
NV-124	EM	MF	0	2	002317	001881	Bypass valve failure	Replace valve
NV-124	CM	NF	0	6	004335	003096	Valve worn	Replace valve
NV-124	CM	BF	0	3	006078	003740	Valve seat warped	Replace valve
NV-128	EM	DE	0	2	002605	002080	Valve sticks	Replace valve seat
NV-128	EM	BF	0	12	003107	002514	Valve will not open	Replace valve
NV-128	CM	NF	0	10	006288	004207	Valve stuck open	Replace actuator
NV-140A	EM	MF	0	3	000952	000983	Diaphragm torn	Replace diaphragm
NV-140A	EM	IE	0	1.5	003005	002393	Valve leaks	Replace diaphragm
NV-140A	EM	MF	0	13.5	005250	003555	Valve leaks	Replace diaphragm

See Last Page for Legend of Abbreviations

Appendix H -Major Equipment Repair History

EQUIPMENT ID	TYPE	FAILURE	DOWN TIME	REPAIR TIME	HIST #	WO #	FAILURE DESCRIPTION	WORK
NV-140B	EM	AT	0	6	001278	001189	Valve sticks	Replace diaphragm
NV-140B	CM	MF	0	1.5	001290	001197	Valve sticks	Replace bonnet
NV-140B	CM	NF	0	6	001392	001282	Valve sticks	Replace actuator, stem
NV-140B	CM	NF	0	5	001826	001308	Valve sticking	Replace valve actuator
NV-140B	CM	ER	0	5	002582	002037	Valve leaks	Replace diaphragm
NV-140B	CM	NF	0	4.5	003329	002627	Valve leaks	Repair lining
NV-140B	EM	NF	0	2	005753	003859	Valve leaks	Replace diaphragm
NV-150E	SD	NF	0	12	005541	003549	Valve leaks	Replace valve
NV-150G	CM	BF	0	1	001870	001612	Indicator dial broken	Replace indicator dial
NV-150O	CM	BF	0	3	003222	002520	Position switch box broken	Rep]place position switch box
NV-150O	CM	MF	0	2.5	003797	002887	Actuator broken	Replace valve seat
NV-151G	EM	NF	0	0.5	001857	001617	Indicator dial broken	Replace indicator dial
NV-156K	CM	BF	0	1	006943	004538	Valve stuck closed	Replace limit switch
NV-159C	CM	NF	0	8.5	005418	003653	Valve leaking at actuator	Replace valve actuator
NV-159C	CM	NF	0	0.5	007394	004827	Valve alarm	Repair cam stop
NV-159D	CM	NF	0	3.75	000621	000712	Valve leaking at outlet flange	Repair valve flange
NV-159F	CM	MF	0	3	006458	004275	Valve leaks	Replace valve seat, bushing
NV-159H	CM	DE	0	3	000303	000358	Vacuum breaker leaking	Replace vacuum breaker
NV-159K	CM	DE	0	4	000358	000277	Vacuum breaker leaking	Replace vacuum breaker
NV-159K	CM	BF	0	6	005931	003923	Valve leaking at actuator	Replace valve actuator
NV-159L	CM	BF	0	4	003344	002604	Tear in valve lining	Replace valve seat
NV-159L	CM	BF	0	3.5	004373	003141	Valve leaking	Replace teflon seal
NV-159M	EM	DE	0	3	000265	000321	Vacuum breaker leaking	Replace vacuum breaker
NV-159M	CM	NF	0	8	006435	004252	Valve leaks	Repair valve
NV-159N	CM	DE	0	3	000359	000276	Vacuum breaker leaking	Replace vacuum breaker
NV-159N	CM	BF	1	17	002887	002158	Valve leaking	Replace seals
NV-159N	CM	AT	0	6	006434	004253	Valve leaks	Repair valve
NV-159O	CM	NF	0	6	006436	004266	Valve stuck	Replace actuator
NV-159Q	CM	BF	0	1.5	005922	003924	Valve leaks	Replace packing
NV-159Q	EM	NF	0	1	007066	004677	Valve leaks	Repair valve
NV-159Q	EM	NF	0	2	007083	004683	Valve leaks	Repair valve
NV-159Q	CM	NF	0	3	007156	004682	Valve leaks	Replace valve

See Last Page for Legend of Abbreviations

Appendix H -Major Equipment Repair History

EQUIPMENT ID	TYPE	FAILURE	DOWN TIME	REPAIR TIME	HIST #	WO #	FAILURE DESCRIPTION	WORK
NV-160B	CM	NF	0	4	004847	003376	Valve leaks	Replace stem
NV-160C	CM	NF	0	8	006422	004251	Valve leaks	Replace valve seat
NV-160C	CM	MF	0	1.5	006437	004259	Air regulator leaks	Repair regulator
NV-160D	CM	NF	1	2	003876	002929	Valve leaks	Replace valve seal
NV-163E	CM	MF	0	2	000374	000431	Valve leaks	Replace valve seat
NV-164D	CM	NF	0	1	006951	004544	Centrifuge alarms	Replace limit cams on positioner
NV-164I	CM	IE	0	2	000373	000430	Valve leaks	Replace valve seat
NV-196B	EM	NF	0	0.5	002108	001775	Valve leaks	Replace diaphragm
NV-197B	CM	BF	0	2	001415	001293	Valve leaks	Replace actuator
NV-21A	CM	BF	0	2	000524	000434	Air regulator broken off	replace air regulator
NV-21A	EM	NF	0	2	000618	000705	Not opening properly	Replace valve
NV-21A	EM	NF	0	1.5	001014	001027	Valve not functioning	Replace valve
NV-21A	EM	NF	0	1	001025	001028	Valve not functioning	Replace coil
NV-225B	CM	MF	0	1	002890	002201	Pressure regulator leaks	Replace regulator
NV-226B	CM	NF	0	1	002509	001992	Valve leaks	Repair valve
NV-241B	CM	NF	0	2	005132	003476	Valve will not close	Replace packing
NV-305A	CM	NF	0	1	004728	003270	Valve leaks	Rebuild valve
NV-305B	CM	NF	0	1	003225	002538	Valve leaks	Replace packing
NV-311A	CM	NF	0	4	002621	002048	Wash valve leaking	Replace packing
NV-311A	SD	NF	0	3	004363	003048	Valve leaking from insulation	Replace valve stem seal
NV-311B	SD	NF	0	9	004367	003049	Valve leaking from insulation	Replace valve stem seal
NV-311D	CM	NF	0	8	005841	003890	Packing leak	Replace packing
NV-354A	CM	ER	0	12	005088	003503	Valve leaks	Replace valve
NV-354A	CM	DE	0	2.5	005215	003540	Valve leaks	Replace spool piece
NV-46	EM	MF	0	3	007138	004710	Valve stuck	Replace solenoid
NV-9	CM	BF	0	1	000643	000732	Control valve broken	Replace valve
OD-1	SD	MF	0	3	001986	001661	Manway leaks	Replace gasket
OD-1	EM	DE	0	1	002012	001709	Manway leaks	Seal manway
OD-1	CM	NF	0	2	003592	002595	Manway leaks	Replace gasket
OD-1	SD	NF	0	2	005509		Manway leaks	Replace gasket
P-120A	CM	NF	15	94	001168	001049	Leaking discharge spool piece, eroded lining	Replace spool, repair lining
P-120A	CM	ER	1	8	002733	002130	Leaking discharge elbow flange	Repair leak, patch lining

See Last Page for Legend of Abbreviations

Appendix H -Major Equipment Repair History

EQUIPMENT ID	TYPE	FAILURE	DOWN TIME	REPAIR TIME	HIST #	WO #	FAILURE DESCRIPTION	WORK
P-120A	CM	MF	0	3	005203	003459	Packing leak	Replace packing
P-120A	CM	MF	14	16	007627	004927	Discharge elbow leaks	Replace with fibercast elbow
P-120B	CM	NF	0	4	000209	000261	Vent valve opened on own	Replace air control valve
P-120B	EM	BF	0	0.5	000455	000529	Coupling for valve position broke	Replace coupling
P-120B	CM	BF	0	1.5	002344	001908	Discharge valve failure	Replace screws that turn shaft
P-120B	CM	NF	1	23	002481	001874	Leaking discharge elbow flange	Repair leak, patch lining
P-120B	CM	ER	2	12	007492	004913	Spool reducer leaks	Replace reducer
P-120C	CM	OE	0	3	000853	000905	Seal water leak	Replace packing
P-120C	CM	ER	0	12	002090	001757	Discharge elbow leak	Replace elbow
P-120C	CM	ER	7	4	002200	001806	Discharge pipe leak	Repair pipe and lining
P-120C	CM	MF	1	6	003499	002732	Packing leak	Replace packing
P-120C	CM	NF	1	2	005766	003845	Packing leak	Replace packing
P-120C	CM	ER	3	8	006314	004127	Discharge spool piece leaks	Replace spool piece
P-120D	CM	MF	3	53	002559	001984	Pinhole in impeller	Replace throat bushing
P-120D	CM	BF	0	0.5	003658	002101	Broken drain pipe	Repair drain line
P-120D	CM	NF	3	49	006459	004264	Pump casing leaks	Replace discharge elbow, spool piece, seal
P-120E	EM	NF	0	0.5	000456	000530	Discharge valve coupling bolts failure	Replace bolts
P-120E	CM	NF	0	1	001397	001287	Seal water leak	Replace packing
P-120E	CM	BF	8	12	005767	003792	Suction valve failure	Replace valve
P-120E	EM	OE	0	0.5	006224	004126	Rotometer broken	Replace rotometer
P-120E	CM	ER	2	16	006898	004435	Discharge reducer leaks	Replace spool piece
P-120E	EM	NF	0	1	007274	004772	Prox switch failure	Replace switch
P-120E	CM	NF	0	6	007462	004889	Suction spool piece leaks	Replace spool piece
P-120F	CM	NF	1	18	001573	001372	Discharge reducer leak	Replace spool piece
P-120F	CM	MF	2	44	001598	001395	Discharge elbow leak	Repair elbow, lining
P-120F	CM	WP	0	4	001721	001460	Worn packing	Replace packing
P-120F	CM	ER	0	12	001807	001553	Discharge pipe leak	Replace pipe
P-120F	CM	NF	9	57	002316	001832	Casing leak	Replace throat bushing, repair lining
P-120F	CM	ER	4	57.5	004484	003177	Spool piece leak	Replace suction and discharge spool piece, throat bushing
P-120G	CM	NF	0	1.5	000124	000165	Packing leak	Replace packing
P-120G	EM	NF	0	2	001579	001389	Discharge vent valve failure	Replace solenoid
P-120G	CM	NF	0	56	001922	001306	Casing leak	Replace cover plate liner, throat bushing, spool piece, elbow

See Last Page for Legend of Abbreviations

Appendix H -Major Equipment Repair History

EQUIPMENT ID	TYPE	FAILURE	DOWN TIME	REPAIR TIME	HIST #	WO #	FAILURE DESCRIPTION	WORK
P-120G	CM	BF	0	0.5	002659	002102	Broken drain line	Repair drain line
P-120G	CM	NF	0	2	005009	003439	Packing leak	Replace packing
P-120G	EM	NF	0	2	005045	003467	Discharge vent valve failure	Replace solenoid, 2 coils
P-120G	CM	BF	9	114	005182	003448	Casing leak	Replace frame plate liner, seal, shaft sleeve
P-120G	CM	BF	1	12	006847	004557	Discharge spool piece leaks	Replace spool piece
P-120G	CM	PL	0	5	007280	004775	Suction spool piece leaks	Replace spool piece
P-120H	CM	NF	0	2	002343	001907	Smoking packing	Replace packing
P-120H	CM	NF	6	3	004256	003079	Packing leak	Replace packing
P-120H	CM	NF	6	3	004256	003079	Packing leak	Replace packing
P-120K	CM	IE	1	1.5	002461	001961	Bearing oilier leak	Replace motor bearing housing nipple
P-120K	CM	NF	5	84	002716	002116	Pump blockage	Replace throat bushing
P-120K	CM	NF	0	1	006927	004620	Pump would not start	Replace solenoid valve
P-120L	CM	NF	0	15	001629	001386	Spool piece leak	Replace reducer spool piece
P-120L	CM	BF	0	6	002307	001845	Gear box oil leak	Replace oil seal
P-120L	CM	DE	1	40	002421	001934	Casing leak	Replace throat bushing
P-120L	CM	MF	18	43	002800	002100	Impeller casing leak	Replace spool piece, o-ring gasket
P-125A	EM	NF	0	6	000331	000376	Sample inlet leak	Replace worn pipe fittings
P-125A	EM	NF	0	1	001003	001019	Drive belts worn	Replace belts
P-125A	CM	NF	22	6	001170	001021	Worn motor side sheave	Replace sheave
P-125A	CM	NF	1	8	001394	001268	Impeller housing leak	Replace liner
P-125A	CM	ER	4	14	002588	002033	Leaking through weep holes	Replace suction liner, throat bushing, impeller
P-125A	CM	ER	0	18	004694	003291	Pump casing leak	Replace impeller, liner, throat bushing, v-belts
P-125A	CM	ER	0	7	005694	003834	Leaking through weep holes	Replace throat bushing
P-125B	EM	OE	1	2	002583	002042	Smoking packing	Replace packing
P-125B	EM	NF	0	1	006272	006272	Pump leaks	Replace packing
P-125B	CM	ER	1	27	006607	004339	Pump leaks	Replace bearing housing, seal assembly
P-320A	CM	IE	0	10	000434	000428	Pump loud	Replace upper pump bearing
P-320A	CM	BF	0	2	001163	001103	Gauge stuck	Replace gauge
P-320A	CM	MF	0	14	001742	001509	Pump loud	Replace upper pump bearing
P-320A	CM	BF	0	7.5	004774	003347	Pump loud	Replace lower motor bearing
P-320A	CM	DE	0	14	005778	003865	Pump loud	Replace upper pump bearing
P-320B	SD	DE	3	30	000424	000454	Pump loud	Replace impeller

See Last Page for Legend of Abbreviations

Appendix H -Major Equipment Repair History

EQUIPMENT ID	TYPE	FAILURE	DOWN TIME	REPAIR TIME	HIST #	WO #	FAILURE DESCRIPTION	WORK
P-320B	CM	NF	1	18	000453	000522	Bearings hot	Replace upper pump bearing
P-320B	CM	MF	0	16	001923	001650	Bearings hot	Replace upper pump bearing
P-320B	CM	NF	1	11	002318	001853	Pump loud	Replace upper pump bearing
P-320B	CM	BF	0	8	002420	001916	Pump loud	Replace bearings
P-320B	CM	IE	0	13	002422	001928	Bearings hot	Replace upper pump bearing
P-320B	CM	BF	0	5	005581	003791	Pump loud	Replace bearings
P-320B	CM	BF	1	30	005762	003864	Pump loud	Replace bearings
P-330A	CM	NF	0	2	000363	000374	Pump leaks	Replace packing
P-330A	CM	NF	0	1	001277	001176	Pump leaks	Replace packing
P-330A	CM	MF	2	16	001673	001413	Pump leaks	Replace packing
P-330A	CM	MF	0	2	002309	001866	Discharge pressure low	Replace gauge
P-330A	CM	NF	0	2	002394	001927	Pump leaks	Replace packing
P-330A	EM	OE	0	2	002603	002073	Belts worn	Replace belts
P-330A	CM	MF	0	8	003815	002909	Pump output low	Replace belts
P-330A	CM	NF	0	1.5	004352	003146	Pump leaks	Replace packing
P-330A	CM	BF	0	4	004366	003148	Shaft sleeve worn	Replace shaft sleeve
P-330A	CM	NF	0	0.75	005006	003456	Pump leaks	Replace packing
P-330A	CM	IE	0	4	005420	003633	Pump leaks	Replace packing
P-330A	EM	BF	0	5	007124	004705	Bearings loud	Replace bearings
P-330B	CM	NF	0	1.5	000302	000357	Pump leaks	Add packing
P-330B	EM	MF	0	4	000537	000664	Pump loud	Replace belts
P-330B	EM	NF	0	1	001725	001476	Pump leaks	Replace packing
P-330B	CM	NF	0	2	002393	001546	Pump leaks	Replace packing
P-330B	CM	NF	0	1	002608	002069	Pump leaks	Replace packing
P-330B	EM	NF	0	2	002930	002247	Pump leaks	Replace packing
P-330B	CM	NF	0	2	003637	002643	Pump leaks	Replace packing
P-330B	CM	NF	0	2	003773	002666	Pump leaks	Replace packing
P-330B	CM	NF	0	7	003952	002919	Pump leaks	Replace front liner
P-330B	EM	NF	0	2	004370	003157	Pump leaks	Replace packing
P-330B	CM	NF	0	4	005015	003452	Pump leaks	Replace packing
P-330B	CM	MF	0	12	005390	003632	Pump leaks	Replace shaft sleeve, liner
P-330B	CM	NF	0	2	006645	004400	Pump loud	Replace belts

See Last Page for Legend of Abbreviations

Appendix H -Major Equipment Repair History

EQUIPMENT ID	TYPE	FAILURE	DOWN TIME	REPAIR TIME	HIST #	WO #	FAILURE DESCRIPTION	WORK
P-331	EM	OE	0	0.25	006549	004308	Sight glass cracked	Replace sight glass
P-340A	CM	RD	0	4	000637	000507	Motor sheave worn	Replace motor sheave
P-340A	CM	NF	0	0.5	005758	003857	Discharge pressure gauge broken	Replace pressure gauge
P-340A	CM	BF	0	14	005764	003862	Motor bearing worn	Replace bearings
P-340A	CM	NF	0	17	005842	003854	Motor bearing worn	Replace bearings
P-340B	CM	NF	0	4	000068	000063	Pump belts loud	Replace belts
P-340B	CM	BF	0	2	000334	000370	Smoked packing	Replace packing
P-340B	CM	RD	1	28	000384	000402	Pump casing leaking	Replace with mechanical seal
P-340B	CM	RD	0	4	000634	000508	Motor sheave worn	Replace motor sheave
P-340B	EM	NF	0	2	002550	002032	Pressure gauge faulty	Replace pressure gauge
P-340B	CM	ER	0	18	003447	002506	Impeller, throat bushing worn	Replace impeller, throat bushing
P-340B	CM	NF	0	2	004902	003394	Belts loose	Replace belts
P-350	CM	IE	0	3	000270	000322	Pump leaks	Replace shaft seal
P-350	CM	BF	0	6	003852	002831	Valve stuck	Replace valve
P-350	EM	ER	0	1	005966	003980	Blow down valve stuck	Replace valve
P-360	CM	IE	2	20	000436	000433	Pump loud	Replace bearings, seals
P-360	CM	RD	0	8	001906	001449	Pump loud	Replace bearings
P-360	EM	NF	0	1	004757	000332	Level switch malfunction	Replace level switch
P-370A	CM	RD	0	6	000757	000854	Worn motor side sheave	Replace sheave
P-370A	EM	NF	0	2	001104	001094	Belts worn	Replace belts
P-370A	CM	ER	0	16	002795	002180	Leaking through weep holes	Replace throat bushing, impeller
P-370A	CM	NF	0	12	003295	002602	Suspected parts wear	Replace throat bushing, impeller
P-370A	CM	NF	1	2.5	003803	002902	Local stop switch failure	Replace starter contacts, springs
P-370A	CM	NF	1	2	005302	003582	Belt sheave worn	Replace sheave
P-370B	CM	NF	0	2	002905	002793	Packing worn	Replace packing
P-370B	CM	OE	0	3	005359	003621	Pump keeps blowing control fuses	Replace indicator lamp
P-370B	CM	NF	0	2	007187	004731	Pump loud	Replace belts
P-370B-M1	CM	NF	0	10	003613	002785	Motor loud	Replace bearings
P-600	CM	NF	0	0.5	005184	003500	Leaking vacuum breaker	Replace vacuum breaker
P-608	CM	NF	0	12	006755	004434	Pump would not maintain prime	Repair foot valve
P-608	CM	ER	0	4	007076	004655	Pump worn	Replace shaft sleeve, seal
P-610A	CM	OE	0	5	000012	000020	Seal leak	Replace seal

See Last Page for Legend of Abbreviations

Appendix H -Major Equipment Repair History

EQUIPMENT ID	TYPE	FAILURE	DOWN TIME	REPAIR TIME	HIST #	WO #	FAILURE DESCRIPTION	WORK
P-610A	EM	MF	0	2	000014	000022	Casing leak	Replace seal
P-610A	CM	DE	0	8	000019	000028	Pump casing cracked	Repair pump casing
P-610A	CM	NF	1	1.5	000031	000040	Packing leak	Tighten packing
P-610A	CM	DE	0	2	000173	000238	Oil leak	Replace seal
P-610A	CM	IE	0	9	000383	000438	Bearing worn	Replace bearing
P-610B	CM	NF	0	1	002939	002250	Plugged filter	Replace filter
P-620	CM	NF	0	2	007326	004785	Hypochlorite pump leaks	Repair pump
P-620	CM	NF	0	4	007351	004800	Hypochlorite pump cracked	Repair pump
P-630	CM	NF	0	7.75	005793	003326	Pump loud	Replace pump
P-630	CM	NF	0	8	006017	003883	Pump loud	Replace bearings
P-700A	SD	DE	8	32	000435	000427	Pump shaft broken	Replace shaft bearings
P-700A	EM	NF	0	1.25	001002	001018	Drive belts worn	Replace drive belts
P-700A	CM	IE	0	14	001413	001234	Low discharge pressure	Replace casing gasket
P-700A	CM	NF	1	28	001751	001510	No discharge pressure	Replace broken shaft, bearings
P-700A	CM	AT	0	0.3	003620	002588	Valve leaks	Replace packing
P-700A	CM	ER	0	6	004035	002987	Packing leaks	Replace packing
P-700A	CM	ER	0	3	004822	003378	Elbow spool leaks	Replace spool
P-700A	CM	BF	2	32	004958	003415	Pump not running	Rebuild pump
P-700A	CM	NF	0	3.5	005258	003559	Valve leaks	Replace packing
P-700A	SD	BF	0	20	005571	003738	Casing leaks	Replace gasket, cover plate
P-700A	CM	NF	0	1	005619	003802	Pump pressure low	Replace gauge
P-700A	CM	NF	0	0.5	005768	003844	Valve leaks	Replace valve
P-700B	CM	BF	0	0.5	000272	000323	Pressure gauge broken	Replace gauge
P-700B	CM	DE	1	2	000539	000654	Reducer leaking	Replace reducer
P-700B	EM	BF	0	1	000873	000935	Discharge valve stuck	Replace valve
P-700B	CM	DE	1	34	001064	001036	No discharge pressure	Replace shaft, bearings
P-700B	CM	PL	0	0.5	001537	001354	Valve not responding to controls	Replace valve relay
P-700B	EM	BF	0	1.5	001656	001434	Drive belts worn	Replace drive belts
P-700B	CM	BF	2	46	002356	001894	Pump noisy	Replace upper bearing
P-700B	EM	ER	0	2	003489	002756	Pump leaks	Repair rubber lining
P-700B	CM	MF	0	3	003593	002798	Valve leaks	Replace valve
P-700B	CM	AT	0	3	003664	002833	Elbow leaks	Replace union

See Last Page for Legend of Abbreviations

Appendix H -Major Equipment Repair History

EQUIPMENT ID	TYPE	FAILURE	DOWN TIME	REPAIR TIME	HIST #	WO #	FAILURE DESCRIPTION	WORK
P-700B	CM	NF	1	40	003799	002900	Pump vibrates excessively	Replace bearings
P-700B	CM	MF	0	2	005012	003421	Valve will not open	Replace packing
P-700B	CM	BF	0	12.5	005872	003832	Pump seized	Replace bearings, shaft
P-710	CM	DE	0	1	001239	001165	Valve stuck	Replace valve seat
P-710	CM	AT	0	4	001778	001260	Valve sticks	Replace valve
P-720	CM	NF	0	1	002191	001574	Pump pressure low	Replace gauge
P-720	CM	NF	0	0.3	003595	002815	Valve handle broken	Replace handle
P-720	EM	NF	0	2	005482	003724	Pump leaks	Replace lower seal
P-730	CM	BF	0	1	001839	001581	Insulation worn	Repair insulation
P-811B	CM	OE	0	0.5	006593	004346	Seal water rotometer glass broken	Replace glass
P-811B	CM	NF	0	2	007358	004780	Supply valve worn	Replace valve
P-900A	CM	NF	0	1	002956	002261	Belts crakced	Replace belts
P-900A	CM	ER	0	14	003052	002463	Worn suction plate lines	Replace suction lines
P-900A	CM	MF	0	4	006757	004536	Pump has low flow rate	Replace belts, sheaves
P-900B	CM	DE	0	8	003049	002397	Valve leaks	Replace valve
P-900B	CM	NF	0	2	006286	004201	Belts loose	Replace belts
P-900B	EM	NF	0	3.5	007078	004681	Belts loose	Replace belts
P-940A	CM	NF	0	0.5	003928	002853	Sight glass leaks	Replace rotometer
P-940B	CM	OE	0	1	000340	000389	Rotometer leaks	Replace seal
P-940B	EM	BF	0	0.5	004004	003003	Broken flow meter	Replace flowmeter
P-940B	CM	NF	0	5	005871	003920	Belts loud	Replace belts
P-940C	CM	BF	0	1	000195	000053	Speed adjustment stuck	Replace handle
P-940C	CM	DE	0	0.5	000203	000035	Speed settipng handle broken	Replace handle
P-945A	CM	MF	0	0.5	001300	001204	Rotometer leaks	Replace seals
P-945A	CM	MF	0	1	001527	001338	Rotometer leaks	Replace seals
P-945B	EM	BF	0	1	002292	001854	Valve positioner broken	Replace valve
P-945C	CM	OE	0	1	002483	001901	Indicator tubes leak	Replace tubes
P-950A	CM	BF	0	0.25	001519	001346	Discharge pressure gauge failure	Replace gauge
P-950A	CM	NF	8	1	001545	001329	Spool piece worn	Replace spool piece
P-950A	EM	NF	0	0.5	002980	002284	Worn belts	Replace belts
P-950A	CM	NF	0	0.5	003053	002457	Discharge pressure gauge failure	Replace gauge
P-950A	CM	BF	0	0.5	003623	002827	Discharge pressure gauge failure	Replace gauge with oil filled gauge

See Last Page for Legend of Abbreviations

Appendix H -Major Equipment Repair History

EQUIPMENT ID	TYPE	FAILURE	DOWN TIME	REPAIR TIME	HIST #	WO #	FAILURE DESCRIPTION	WORK
P-950A	CM	NF	4	120	005786	003831	Coupling / fan side bearings worn	Replace bearings
P-950A	EM	NF	0	2	007297	004790	Belts loud	Replace belts
P-950B	CM	BF	0	0.5	001230	001149	Discharge pressure gauge failure	Replace gauge
P-950B	EM	BF	0	0.1	001880	001629	Discharge pressure gauge failure	Replace gauge
P-950B	CM	MF	0	0.25	002099	001765	Discharge pressure gauge failure	Replace gauge
P-950B	CM	BF	0	0.5	002336	001898	Discharge pressure gauge failure	Replace gauge
P-950B	CM	IE	0	2	002502	001985	Discharge pressure gauge failure	Replace gauge
P-950B	EM	IE	0	1	002507	001991	Leak at spool piece	Replace gasket
P-950B	CM	NF	2	0.5	003054	002458	Discharge pressure gauge failure	Replace gauge
P-950B	CM	BF	0	0.5	003624	002828	Discharge pressure gauge failure	Replace gauge
P-950B	CM	IE	0	1.5	003957	002968	Packing leak	Replace packing
P-950B	EM	WP	0	2	004302	003116	Control transformer burned out	Replace transformer
P-950B	EM	BF	0	0.5	005451	003708	Discharge pressure gauge failure	Replace gauge
P-950B	EM	NF	0	3.5	007077	004680	Belts worn	Replace belts
P-960A	CM	IE	0	0.5	000148	000197	Casing leaks	Replace o-ring
P-990A	EM	OE	0	6.5	002690	002123	Pump leaks	Replace o-rings
P-990A	CM	MF	0	1.5	002837	002198	Discharge hose worn	Replace hose
P-990A	EM	MF	0	0.3	002947	002256	Discharge hose worn	Replace hose
P-990A	CM	BF	0	2.5	005025	003454	Coupling nut cracked	Replace head fittings
P-990A	EM	NF	0	3	005441	003701	Suction hose plugged	Replace hose
P-990A	CM	NF	0	0.5	005465	003700	Discharge hose leaking	Replace hose
P-990B	EM	NF	0	0.5	001030	001032	Discharge fitting missing	Replace fitting
P-990B	EM	BF	0	4	002166	001816	Manifold cracked	Replace manifold
P-990B	EM	OE	0	3	002946	002255	Seal leaks	Replace seal
P-990B	CM	MF	0	0.75	003307	002620	Agitator belt torn	Replace belt
P-990B	EM	DE	0	1	003389	003389	Pump head cracked	Replace pump head
P-990B	EM	NF	0	1	003734	002877	Drive belt worn	Replace belt
P-990B	CM	BF	0	5	003822	002894	Pump leaks	Replace bearings, top cap
P-990B	EM	NF	0	3	005003	003453	Fittings leak	Replace valve
P-990B	EM	NF	0	3	005442	003702	Filter leaks	Replace o-rings
P-990B	EM	MF	0	1	005776	003869	Agitator not rotating	Replace belt
P-990B	CM	BF	0	0.5	005957	003970	Drive belt worn	Replace drive belt

See Last Page for Legend of Abbreviations

Appendix H -Major Equipment Repair History

EQUIPMENT ID	TYPE	FAILURE	DOWN TIME	REPAIR TIME	HIST #	WO #	FAILURE DESCRIPTION	WORK
P-990B	EM	BF	0	6	005997	004015	Agitator noisy	Replace bearing
PCU2	EM	PL	0	1	007442	004878	Control unit off line	Replace module
PDC-1	CM	BF	0	0.5	006955	004560	Broken light fixture	Replace fixture
PIPINGABS	CM	MF	0	1	000095	000145	Bleed pump elbow leaking	Replace elbow
PIPINGABS	CM	NF	0	2	000191	000148	Spool piece leak	Replace spool piece
PIPINGABS	SD	IE	0	6	000419	000475	Absorber leaking	Repair hastelloy Wallpaper
PIPINGABS	SD	MF	2	4	000481	000470	Manway leaking	Replace gasket
PIPINGABS	EM	DE	0	4	000744	000837	Valve leaking	Replace valve 120
PIPINGABS	EM	DE	0	7	000752	000841	Elbow leaking	Replace elbow
PIPINGABS	CM	NF	0	3	001279	001091	Hole in rubber lining on discharge elbow	Repair rubber lining
PIPINGABS	SD	MF	1	8	002671	000491	72 inch header leaks	Repair rubber lining
PIPINGABS	CM	NF	0	3	002804	002041	Rubber lining damage	Repair rubber lining
PIPINGABS	CM	ER	0	8	003922	002935	Flange leaks	Replace flange
PIPINGABS	CM	BF	0	13	004976	003395	Leak near density analyzer	Repair pipe
PIPINGABS	SD	MF	0	8	005547	003666	Discharge pipe rubber damage	Repair rubber damage
PIPINGABS	CM	BF	0	6	005597	003741	Isolation valve leaking	Replace valve
PIPINGABS	CM	ER	4	7	007561	004784	Rubber damage to suction piece	Repair rubber
PIPINGDWT	CM	IE	0	0.5	004355	003111	Sample valve leaks	Replace bonnet
PIPINGDWT	CM	ER	2	12	004963	003374	V-236 piping failed	Replace spool piece, fittings
PIPINGDWTF	CM	MF	0	16	006535	003967	Line plugged	Replace valve
PIPINGLIME	CM	MF	1	3	001069	001047	Unloading station air hose leak	Replace unloading station air hose
PIPINGLIME	CM	WP	1	6	002094	001718	Unloading station air hose leak	Replace unloading station air hose
PIPINGLIME	CM	ER	19	5.8	003780	002787	Unloading station air hose leak	Replace unloading station air hose
PIPINGLIME	CM	NF	0	1.5	007290	004748	Unloading hose leaks	Replace hose
PIPINGWES	CM	DE	0	8	000678	000652	WES nozzles plugged	Clean nozzles
PIPINGWES	CM	DE	0	3	005317	003560	Air valve noisy	Replace valve
PIPINGWES	CM	ER	0	3	005840	003715	Check valve seized	Replace valve
PIPINGWES	CM	NF	0	6.5	005934	003953	Pipe spool piece missing	Replace spool piece
PIPINGWWT	CM	NF	0	8	004921	003377	Strainer leaks	Replace seal
PSL-337A	EM	IE	0	2	005616	003800	Valve leaks	Replace packing
PSV-390B	CM	NF	0	0.5	004002	002837	Seal wire broken	Replace seal wire
PSV-390C	CM	NF	0	0.5	004003	002838	Seal wire broken	Replace seal wire

See Last Page for Legend of Abbreviations

Appendix H -Major Equipment Repair History

EQUIPMENT ID	TYPE	FAILURE	DOWN TIME	REPAIR TIME	HIST #	WO #	FAILURE DESCRIPTION	WORK
PSV-432A	EM	NF	0	1	000654	000743	Valve leaks	Replace diaphragm
PSV-432B	CM	AT	0	3	006984	004645	Relief valve stuck	Replace valve
PSV-432C	EM	BF	0	1	000653	000742	PSV worn	Replace PSV
PSV-432C	CM	NF	0	5	001850	001586	Low unloading pressure	Rep[lace line
PSV-432C	CM	NF	0	1.5	006511	004295	Relief valve stuck	Replace valve
PSV-480C	CM	NF	0	0.15	004354	002839	Seal wire broken	Replace seal wire
PSV-570	CM	NF	0	1.5	003761	002840	Seal on valve broken	Repalce seal
PSV-570	CM	DE	0	1.5	003949	002895	Seal on valve broken	Repalce seal
PT-147B	SD	BF	1	16	001337	000707	Capillary tube broken	Replace capillary tube
ST-1	EM	NF	0	0.25	002087	001758	Drain leaks	Replace valve
ST-1	CM	BF	0	4	003665	002780	Valve actuator broken	Replace actuator
ST-1	CM	BF	0	4	004669	003250	Valve leaks	Rebuild valve
ST-2	CM	BF	0	1	001245	001162	Drain valve leaks	Replace drain
ST-2	SD	NF	0	5	001332	001132	Valve leaks	Rebuild valve
ST-2	CM	NF	0	3	004196	003065	Basket leaks	Replace basket bottom
ST-2	CM	AT	0	5	007281	004751	Pressure gauge stuck	Replace pump
ST-600	CM	AT	0	3	000720	000792	Strainer leaks	Repair leak
ST-600	CM	MF	0	2	005463	003565	Filtomat malfunctioning	Replace basket, screen
ST-601	CM	NF	0	3	004624	002856	Bearings worn	Replace bearings
ST-601	EM	IE	0	4	005429	003673	Filtomat malfunctioning	Repair cleaning arm
T-120	CM	NF	0	6.5	000538	000659	Sample ports on inlet duct leak	Replace gaskets
T-120	CM	DE	0	8	000550	000658	Elbow from P-700 leaks	Replace elbow
T-120	CM	NF	0	1	000588	000657	Duct manway door leak	Replace gaskets
T-120	SD	MF	0	10	002105	001324	Header leak	Repair header
T-120	SD	MF	3	8.5	002666	001847	Sight glass leak	Sight glass leaks
T-120	SD	MF	93	2	002670	001674	Crack on W side of absorber	Repair crack
T-120	CM	DE	0	3	002750	002060	NE sight glass leaks	Repair sight glass
T-120	SD	NF	22	24	004322	002942	Grid packing erosion	Replace grid packing
T-120	CM	NF	0	4	004515	003143	Holes on S and W walls weeping	Weld patches over holes
T-120	SD	MF	0	145	004756	003321	Clad plate leaking at interface	Repair plating
T-120	CM	NF	0	10	005131	003464	Discharge header flange leak	Reseal flange
T-120	CM	MF	0	30	005930	003882	Drain line from weep holes leaks	Replace drain line

See Last Page for Legend of Abbreviations

Appendix H -Major Equipment Repair History

EQUIPMENT ID	TYPE	FAILURE	DOWN TIME	REPAIR TIME	HIST #	WO #	FAILURE DESCRIPTION	WORK
T-120	CM	NF	0	1	006322	042203	Hole near interface	Weld patch
T-120	CM	DE	0	12	006608	004208	Hole near interface level	Repair hole
T-120	CM	AT	0	3	006676	006340	Hole near sight glass	Weld patch
T-120	CM	MF	0	3	006710	004425	Hole near port	Weld patch
T-120	CM	MF	0	12	007177	004310	Piping gutter leaks	Replace gutter
T-120	CM	ER	0	12	007609	004971	Leak at wet/dry interface	Repair leak
T-120	SD	BF	0	16	007672	004200	Quench flush line corroding	Replace flush line
T-120-1	SD	RD	0	3	001982	001683	Manway leaks	Replace gasket
T-120-3	SD	NF	0	3	001990	001685	Manway leaks	Replace gasket
V-175	CM	BF	0	2	006534	004187	Valve leaks	Repair valve
V-330	CM	ER	0	2	005342	003604	V-720 level high	Replace sample valve
V-330	SD	DE	0	11	007289	004730	Valve failed	Replace valve
V-330	CM	DE	0	10	007338	004801	Valve stem bent	Replace valve
V-370	EM	DE	0	4	000337	000386	Spool piece leaks	Replace spool piece
V-370	CM	ER	0	6	007603	004973	Inlet nozzle lining damage	Replace resin lining
V-500A	EM	NF	0	1.5	005984	004009	Unloading hose worn	Replace hose
V-500B	CM	MF	0	8	001036	001025	Gear reducer leaks oil	Replace packing
V-710	CM	DE	0	6	002602	002064	Valve sticks	Replace key stock
V-710	CM	NF	0	1.5	002703	002121	Heat trace box failure	Repair heat trace box
V-710	EM	DE	0	3	002810	002193	Valve sticks	Replace valve
V-710	EM	MF	0	4	004304	003118	Valve will not open	Replace actuator
V-710	CM	DE	0	4	007339	004802	Valve stuck	Replace valve
V-720	SD	NF	0	3	005549	003684	Flush lines worn	Replace flush lines
V-800	CM	NF	0	0.5	001992	001696	Air slide leaks	Patch line
V-810A	CM	AT	0	4	007449	004857	Discharge valve stuck	Replace valve
V-940B	CM	NF	0	1	000648	000603	Drain leaks	Repair drain
V-950	EM	NF	0	0.5	000369	000416	Rotometer leaks	Replace rotometer
V-960	CM	AT	0	1	005365	003627	Light curtain not working	Repair curtain
V-960	EM	BF	0	0.5	005754	003860	Position indicator broken	Replace indicator
XV-21B	CM	NF	0	2	001172	001074	Valve sticks	Rebuild valve

See Last Page for Legend of Abbreviations

Appendix H -Major Equipment Repair History

EQUIPMENT ID	TYPE	FAILURE	DOWN TIME	REPAIR TIME	HIST #	WO #	FAILURE DESCRIPTION	WORK
						Type		
						CM	Corrective Maintenance	
						EM	Emergency Maintenance	
						SD	Shutdown	
						Failure		
						AT	Atmosphere	
						BF	Breakage-Failure	
						DE	Material- Failure Design	
						ER	Erosion	
						IE	Installation Error	
						LEAK	Leak	
						MF	Materail Failure Age	
						NF	No Failure or Loss of Function	
						NORMAL	Normal Wear and Tear	
						OE	Operator Error	
						PL	Power Loss	
						RD	Design Enhancement	
						RUBBER	Rubber Damage	
						WP	Wrong Part	

See Last Page for Legend of Abbreviations

APPENDIX I
WES TEST DATA

TABLE I-1
UNIT #8 AIR HEATER OUTLET TEMPERATURE PROFILE

WEST DUCT

350	376	374
343	373	365
340	370	341
342	351	351
333	328	356

AVG. TEMP. = 353°F

EAST DUCT

368	368	369
358	370	358
348	370	357
339	359	354
337	336	335

AVG. TEMP. = 355°F

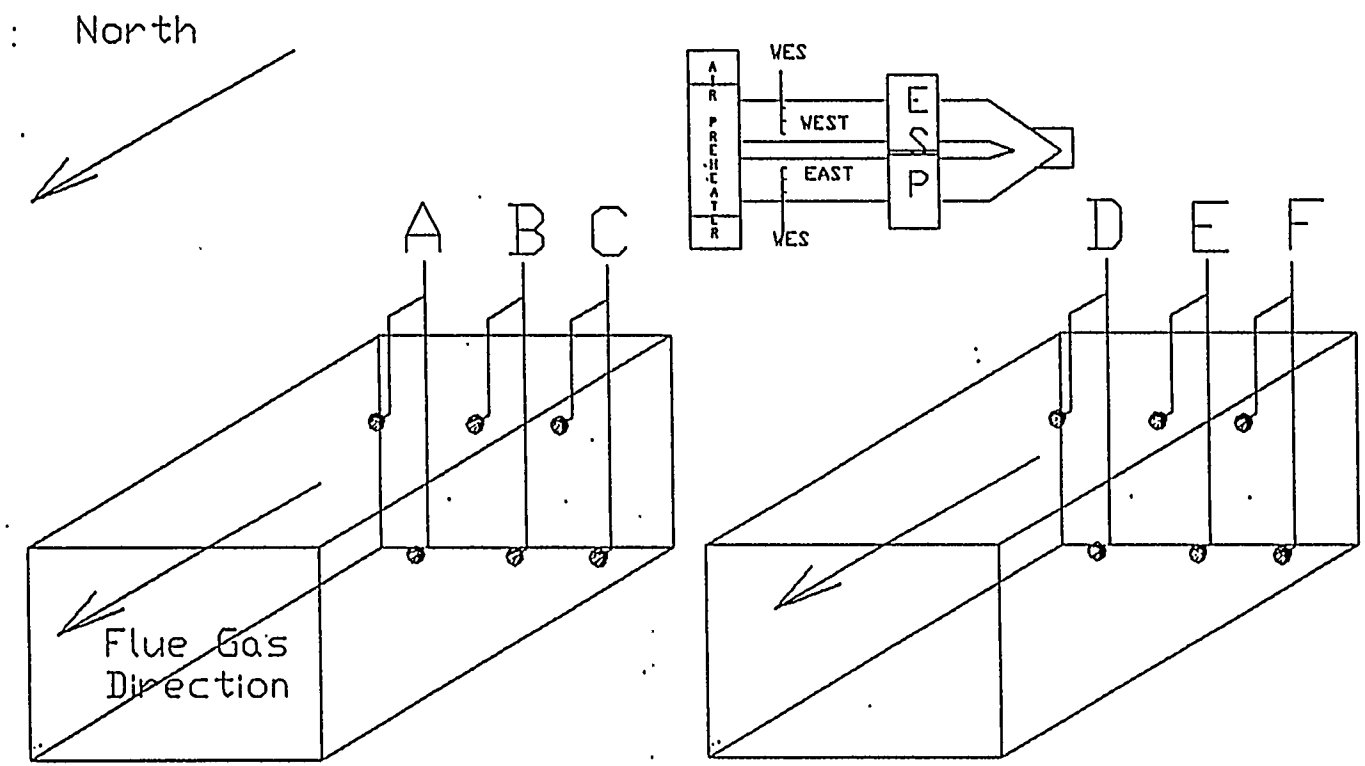

FIGURE 1-2

WES NOZZLE ARRANGEMENT

TABLE I-1
TEMPERATURE PROFILE
FOR WES OPERATION

date	TE1-1W	TE1-2W	TE1-3W	TE1-4W	TE1-5W	TE2-1W	TE2-2W	TE2-3W	TE2-4W	TE2-5W	TE3-1W	TE3-2W	TE3-3W	TE3-4W	TE3-5W	average
25-Jan																
6:00																
8:00																
10:00	356	352	349	347	344	373	372	371	355	337	368	358	338	349	353	354.8
12:00																
14:00	334	321	332	327	314	363	312	329	325	317	367	358	337	347	352	335.6667
16:00	325	300	325	316	301	361	305	328	317	310	366	356	335	345	350	329.3333
18:00	328	312	329	320	306	362	321	338	314	309	365	355	312	324	340	329
20:00	328	312	329	320	306	363	322	338	315	309	367	356	312	324	341	329.4667
22:00	328	313	329	319	305	362	321	337	314	309	366	356	312	323	340	328.9333
0:00																
2:00																
4:00																
Avg	333.1667	318.3333	332.1667	324.8333	312.6667	364	325.5	340.1667	323.3333	315.1667	366.5	356.5	324.3333	335.3333	346	
26-Jan																
6:00	332	328	324	321	317	347	346	343	327	312	341	335	315	322	328	329.2
8:00	337	328	331	323	312	361	333	343	323	312	363	353	312	324	339	332.9333
10:00	331	318	329	322	309	360	320	336	307	300	365	356	333	340	349	331.6667
12:00	331	318	328	319	305	359	320	335	308	300	361	353	335	344	347	330.8667
14:00	333	319	331	323	310	363	323	336	308	303	365	356	337	347	350	333.6
16:00	332	319	329	322	310	361	322	338	311	306	348	339	327	338	345	329.8
18:00	331	317	329	318	307	362	323	338	306	304	316	320	314	326	336	323.1333
20:00	328	315	324	313	296	358	321	338	305	302	313	314	308	321	332	319.2
22:00																0
0:00																0
2:00	335	331	327	325	320	349	349	346	330	314	343	337	317	324	330	331.8
4:00	336	332	329	326	322	351	351	348	332	316	345	339	319	326	332	333.6
average	332.6	322.5	328.1	321.2	310.8	357.1	330.8	340.1	315.7	306.9	346	340.2	321.7	331.2	338.8	

TABLE 1-1
TEMPERATURE PROFILE
FOR WES OPERATION
(continued)

Date	TE1-1	TE1-2	TE1-3	TE1-4E	TE1-5	TE2-1	TE2-2	TE2-3	E2-4	TE2-5	TE3-1	E3-2	E3-3	TE3-4	TE3-5	Avg
25-Jan																
6:00																
8:00																
10:00	362	356	349	343	338	369	373	379	366	343	375	369	372	363	349	360.4
12:00																
14:00																
16:00	327	319	321	302	305	360	324	347	326	304	334	300	334	312	307	321.46667
18:00	324	308	320	309	312	358	311	335	323	300	335	303	333	312	307	319.33333
20:00	322	308	320	309	310	360	322	349	334	314	334	301	331	315	303	322.13333
22:00	322	310	323	310	311	360	323	347	335	315	337	308	334	313	303	323.4
0:00																
2:00																
4:00																
Avg	331.4	320.2	326.6	314.6	315.2	361.4	330.6	351.4	336.8	315.2	343	316.2	340.8	323	313.8	329.34667
26-Jan																
6:00	335	331	326	317	312	345	349	353	339	321	348	343	344	333	323	334.6
8:00	323	312	323	309	307	355	307	335	322	300	327	298	321	300	294	315.53333
10:00	331	324	336	325	320	362	338	357	339	319	346	327	344	337	323	335.2
12:00	324	310	316	298	298	358	322	345	327	308	354	339	353	340	328	328
14:00	326	317	323	306	306	357	297	328	314	296	341	321	340	322	310	320.26667
16:00	329	321	327	310	308	358	300	326	315	297	343	323	339	316	306	321.2
18:00	329	323	328	311	311	361	307	329	323	303	346	328	342	321	310	324.8
20:00	326	321	325	303	299	356	305	328	311	295	344	325	338	313	302	319.4
22:00																
0:00																
2:00	338	335	329	320	315	349	353	357	343	323	352	348	348	337	327	338.26667
4:00	339	336	330	322	316	350	353	359	344	324	354	349	349	339	328	339.46667
average	330	323	326.3	312.1	309.2	355.1	323.1	341.7	327.7	308.6	345.5	330.1	341.8	325.8	315.1	

TABLE I-1
TEMPERATURE PROFILE
FOR WES OPERATION
(continued)

date	TE1-1W	TE1-2W	TE1-3W	TE1-4W	TE1-5W	TE2-1W	TE2-2W	TE2-3W	TE2-4W	TE2-5W	TE3-1W	TE3-2W	TE3-3W	TE3-4W	TE3-5W	average
27-Jan																
6:00	330	316	331	322	311	360	319	338	307	305	315	316	314	327	335	323.0667
8:00	330	316	330	321	308	362	319	336	296	295	314	315	314	326	334	321.0667
10:00	329	315	329	318	306	362	323	338	304	304	310	309	310	322	332	320.7333
12:00	324	304	326	312	297	359	304	328	303	302	306	305	300	314	329	314.2
14:00	322	303	324	313	298	359	306	329	308	306	310	308	300	312	329	316.1333
16:00	320	303	326	313	299	358	305	325	304	301	308	303	299	307	324	313
18:00	324	309	326	316	302	356	301	322	299	298	315	312	303	317	331	316.4
20:00	344	337	338	331	321	362	315	330	312	310	322	317	314	321	328	326.8
22:00	346	340	340	334	325	360	312	328	316	314	326	325	317	327	336	329.7333
0:00																
2:00																
4:00																
average	329.8889	315.8889	330	320	307.4444	359.7778	311.5556	330.4444	305.4444	303.8889	314	312.2222	307.8889	319.2222	330.8889	
28-Jan																
6:00	333	323	334	327	316	358	308	328	309	306	312	297	310	318	318	319.8
8:00	332	321	330	323	312	356	311	325	306	304	321	313	314	324	329	321.4
10:00	334	323	332	325	315	359	311	326	309	310	327	321	317	326	334	324.6
12:00	334	322	331	323	311	359	314	328	305	305	325	316	313	323	331	322.6667
14:00	332	321	329	323	312	358	311	326	309	307	325	319	311	321	329	322.2
16:00	323	311	323	315	301	352	307	322	304	302	319	312	307	315	325	315.8667
18:00	330	317	331	323	312	360	313	329	311	312	318	311	312	318	325	321.4667
20:00	335	322	333	328	317	358	310	326	308	310	316	309	309	314	321	321.0667
22:00	327	310	327	321	308	360	310	327	309	310	319	313	305	310	320	318.4
0:00	320	304	320	313	302	351	304	315	304	305	312	307	307	308	314	312.4
2:00	322	307	323	315	300	352	304	316	301	300	313	311	300	304	312	312
4:00	328	312	329	321	308	359	313	326	308	307	320	321	310	317	326	320.3333
average	329.1667	316.0833	328.5	321.4167	309.5	356.8333	309.6667	324.5	306.9167	306.5	318.9167	312.5	309.5833	316.5	323.6667	

TABLE [illegible]
TEMPERATURE PROFILE
FOR WES OPERATION
(continued)

Date	TE1-1	TE1-2	TE1-3	TE1-4E	TE1-5	TE2-1	TE2-2	TE2-3	E2-4	TE2-5	TE3-1	E3-2	E3-3	TE3-4	TE3-5	Avg
27-Jan																
6:00	332	325	336	328	325	361	324	343	323	300	337	313	334	320	307	327.2
8:00	332	330	338	328	326	365	334	354	347	322	336	312	333	318	304	331.93333
10:00	325	312	315	295	302	362	314	345	324	301	337	317	336	316	300	320.06667
12:00	327	314	319	299	300	360	290	329	344	324	345	324	341	330	313	323.93333
14:00	327	316	319	300	303	361	309	333	324	301	339	314	331	324	308	320.6
16:00	326	316	319	300	300	361	313	335	322	301	333	316	337	327	311	321.13333
18:00	323	312	317	303	303	359	307	330	325	307	329	293	328	314	307	317.13333
20:00	331	324	332	320	321	361	314	342	325	311	343	321	342	329	320	329.06667
22:00	334	329	335	322	322	364	324	346	330	308	346	327	346	334	320	332.46667
0:00																
2:00																
4:00																
average	328.6	319.8	325.6	310.6	311.3	361.6	314.3	339.7	329.3	308.3	338.3	315.2	336.4	323.6	310	
28-Jan																
6:00	360	350	348	342	337	363	299	329	332	311	342	319	342	331	322	335.13333
8:00	321	310	311	308	315	361	314	335	330	308	342	321	342	330	319	324.46667
10:00	321	311	316	311	319	363	316	336	324	307	339	322	344	331	319	325.26667
12:00	321	315	315	307	315	361	312	330	321	304	327	299	328	322	307	318.93333
14:00	323	318	319	309	312	361	316	331	312	300	331	309	333	326	302	320.13333
16:00	319	310	307	296	304	357	310	327	318	305	335	319	339	331	309	319.06667
18:00	349	335	341	337	336	361	313	326	324	309	324	300	323	326	309	327.53333
20:00	358	353	348	340	338	362	308	323	327	310	353	344	356	351	334	340.33333
22:00	360	355	350	342	339	370	369	374	363	343	340	322	344	341	318	348.66667
0:00	354	352	346	338	336	366	367	372	359	341	336	316	335	335	314	344.46667
2:00	358	356	348	340	337	369	370	376	361	341	355	346	354	348	331	352.66667
4:00	324	321	319	303	308	360	313	328	323	300	344	329	346	341	324	325.53333
average	339	332.2	330.7	322.8	324.7	362.8	325.6	340.6	332.8	314.9	339	320.5	340.5	334.4	317.3	

TABLE I-1
TEMPERATURE PROFILE
FOR WES OPERATION
(continued)

date	TE1-1W	TE1-2W	TE1-3W	TE1-4W	TE1-5W	TE2-1W	TE2-2W	TE2-3W	TE2-4W	TE2-5W	TE3-1W	TE3-2W	TE3-3W	TE3-4W	TE3-5W	average
29-Jan																
6:00	351	346	343	343	338	353	307	320	299	296	312	314	298	303	315	322.5333
8:00																
10:00	350	347	343	341	336	367	366	363	350	333	362	355	335	344	349	349.4
12:00	347	341	340	336	330	365	343	351	336	321	358	351	333	342	348	342.8
14:00	347	342	341	339	333	365	344	351	337	325	359	353	335	344	349	344.2667
16:00	332	324	333	326	314	362	327	341	320	314	318	314	323	334	338	328
18:00	329	320	331	322	312	362	321	336	316	310	314	311	322	330	335	324.7333
20:00	329	319	329	321	313	361	321	336	316	313	318	316	322	330	336	325.3333
22:00	328	318	327	318	310	359	318	332	314	309	317	315	320	326	333	322.9333
0:00																
2:00	329	321	327	321	312	354	321	335	317	312	304	298	317	324	328	321.3333
4:00	327	318	328	317	311	361	320	336	312	310	306	308	318	327	332	322.0667
average	336.9	329.6	334.2	328.4	320.9	360.9	328.8	340.1	321.7	314.3	326.8	323.5	322.3	330.4	336.3	
30-Jan																
6:00	325	316	328	319	308	359	317	332	308	306	310	308	318	326	330	320.6667
8:00	321	315	328	317	308	360	316	333	305	300	310	308	315	324	330	319.3333
10:00	307	296	325	322	310	365	340	349	330	316	303	301	300	304	322	319.3333
12:00																
14:00	316	309	328	319	309	351	297	317	306	303	312	311	302	308	325	314.2
16:00	309	297	321	315	301	353	300	321	307	306	312	311	295	300	321	311.2667
18:00	310	299	321	314	301	353	300	325	310	310	315	311	296	304	321	312.6667
20:00																
22:00	313	305	309	303	290	332	305	319	302	296	318	315	299	308	317	308.7333
0:00	333	329	327	324	319	341	328	331	318	307	316	315	311	317	321	322.4667
2:00	332	331	328	325	320	336	313	325	309	295	315	315	305	312	320	318.7333
4:00	348	346	344	341	336	356	312	332	323	315	328	329	313	323	333	331.9333
average	321.4	314.3	325.9	319.9	310.2	350.6	312.8	328.4	311.8	305.4	313.9	312.4	305.4	312.6	324	

TABLE I-1
TEMPERATURE PROFILE
FOR WES OPERATION
(continued)

Date	TE1-1	TE1-2	TE1-3	TE1-4E	TE1-5	TE2-1	TE2-2	TE2-3	E2-4	TE2-5	TE3-1	E3-2	E3-3	TE3-4	TE3-5	Avg
29-Jan																
6:00	323	318	315	297	303	364	335	346	340	326	353	342	351	343	326	332.13333
8:00																
10:00	355	350	345	338	335	366	367	371	359	340	365	359	361	358	342	354.06667
12:00	323	322	325	314	316	356	312	331	322	308	332	321	343	340	320	325.66667
14:00	327	326	328	315	317	359	313	331	326	310	338	321	342	343	327	328.2
16:00	302	306	322	314	320	325	298	327	330	356	343	329	350	346	330	326.53333
18:00	306	310	324	315	320	319	295	327	330	355	335	319	337	330	308	322
20:00	308	312	323	316	322	331	305	332	333	355	336	320	337	332	309	324.73333
22:00	308	312	321	313	319	324	300	329	333	355	330	317	336	325	305	321.8
0:00																
2:00	301	307	310	305	312	351	332	359	356	356	331	319	336	313	310	326.53333
4:00	308	311	321	313	318	329	302	332	334	355	337	324	343	323	316	324.4
average	316.1	317.4	323.4	314	318.2	342.4	315.9	338.5	336.3	341.6	340	327.1	343.6	335.3	319.3	328.60667
30-Jan																
6:00	310	313	321	314	319	327	300	333	336	355	338	325	343	324	317	325
8:00	310	314	320	311	317	334	306	344	344	356	338	323	340	316	311	325.6
10:00	306	302	309	296	306	341	318	332	331	353	308	307	336	322	313	318.66667
12:00																
14:00	362	356	346	339	336	362	335	336	335	314	332	303	341	334	321	336.8
16:00	362	355	346	339	336	359	312	303	313	300	335	314	343	336	323	331.73333
18:00	361	355	346	339	335	355	305	301	318	304	330	306	336	328	318	329.13333
20:00																
22:00	343	338	330	322	319	343	326	321	317	295	344	321	334	331	320	326.93333
0:00	341	337	328	319	316	336	316	310	310	293	316	306	319	312	302	317.4
2:00	342	338	329	320	318	339	318	312	315	298	331	325	335	325	313	323.86667
4:00	359	354	346	339	336	357	323	309	325	311	372	364	365	360	345	344.33333
average	339.6	336.2	332.1	323.8	323.8	345.3	315.9	320.1	324.4	317.9	334.4	319.4	339.2	328.8	318.3	

TABLE I-1
TEMPERATURE PROFILE
FOR WES OPERATION
(continued)

date	TE1-1W	TE1-2W	TE1-3W	TE1-4W	TE1-5W	TE2-1W	TE2-2W	TE2-3W	TE2-4W	TE2-5W	TE3-1W	TE3-2W	TE3-3W	TE3-4W	TE3-5W	average
31-Jan																
6:00	352	349	345	345	340	357	312	333	322	312	330	330	314	323	334	333.2
8:00	354	351	347	347	343	356	304	329	320	313	330	329	306	319	332	332
10:00	345	343	342	338	328	367	348	359	339	322	355	349	328	341	347	343.4
12:00	318	312	327	316	304	354	304	328	320	314	329	328	309	319	330	320.8
14:00																0
16:00	317	308	324	313	301	354	302	322	316	307	326	326	301	310	327	316.9333
18:00	316	310	324	312	299	352	300	325	318	311	327	328	302	308	327	317.2667
20:00	311	310	325	313	301	352	298	324	318	313	328	325	302	309	325	316.9333
22:00	314	309	325	313	299	351	300	323	319	314	326	325	301	310	326	317
0:00	335	332	329	326	322	351	350	346	330	315	342	339	317	325	331	332.6667
2:00	316	312	316	309	299	340	320	328	316	295	324	321	300	312	321	315.2667
4:00																
average	327.8	323.6	330.4	323.2	313.6	353.4	313.8	331.7	321.8	311.6	331.7	330	308	317.6	330	
1-Feb																
6:00	316	307	318	310	295	346	300	319	315	304	322	325	301	315	328	314.7333
8:00	326	318	332	322	307	358	307	328	320	310	334	335	310	321	336	324.2667
10:00	325	317	330	320	305	355	303	328	317	299	334	334	306	320	334	321.8
12:00	322	314	325	316	302	355	303	322	316	302	330	331	303	316	332	319.2667
14:00	324	317	331	318	303	355	305	325	318	305	334	334	305	318	334	321.7333
16:00	327	319	328	321	307	358	307	328	318	306	335	335	308	320	334	323.4
18:00	329	320	330	321	309	359	308	328	321	307	335	336	310	320	334	324.4667
20:00	327	319	331	323	310	358	308	327	320	310	335	338	311	323	338	325.2
22:00	328	321	332	322	308	358	309	327	320	311	338	337	308	320	334	324.8667
0:00	333	328	326	323	318	347	345	342	327	312	340	335	315	323	328	329.4667
2:00	334	330	327	325	320	348	348	345	328	313	341	337	315	325	329	331
4:00	332	328	326	324	319	348	348	345	329	313	340	337	316	326	330	330.7333
average	326.9167	319.8333	328	320.4167	308.5833	353.75	315.9167	330.3333	320.75	307.6667	334.8333	334.5	309	320.5833	332.5833	

TABLE I-1
TEMPERATURE PROFILE
FOR WES OPERATION
(continued)

Date	TE1-1	TE1-2	TE1-3	TE1-4E	TE1-5	TE2-1	TE2-2	TE2-3	E2-4	TE2-5	TE3-1	E3-2	E3-3	TE3-4	TE3-5	Avg
31-Jan																
6:00	362	357	349	342	338	361	327	312	331	314	374	364	366	362	345	346.93333
8:00	363	357	349	342	339	367	346	334	344	330	376	366	367	364	347	352.73333
10:00	364	358	349	342	339	369	366	365	361	337	375	368	367	363	347	358
12:00	362	355	347	339	336	363	348	343	343	327	344	314	351	345	328	343
14:00																
16:00	363	356	347	340	336	359	333	302	322	308	343	331	342	315	302	333.26667
18:00	363	355	347	340	336	359	332	304	321	307	347	333	342	316	303	333.66667
20:00	362	355	347	340	336	360	339	315	327	309	349	333	340	322	304	335.86667
22:00	362	355	346	340	336	357	329	304	319	305	345	330	338	320	302	332.53333
0:00	344	338	330	323	318	350	352	351	341	325	353	347	345	337	326	338.66667
2:00	347	340	332	326	322	342	320	303	310	297	353	343	343	333	323	328.93333
4:00	352	345	337	330	325	347	328	315	318	304	341	333	337	319	300	328.73333
average	358.5	351.9	343.6	336.7	332.8	357.6	338.2	322.5	330.6	314.8	354.5	342	348.9	336	320.6	
1-Feb																
6:00	355	348	341	334	330	355	341	329	334	323	338	326	334	312	293	332.86667
8:00	364	355	348	342	338	359	333	315	322	307	351	338	345	330	311	337.2
10:00	355	344	340	338	336	353	333	319	322	309	351	338	339	326	309	334.13333
12:00	361	353	346	340	336	354	326	308	317	305	346	340	346	322	302	333.46667
14:00	314	319	326	303	304	353	330	316	320	308	351	338	343	326	307	323.86667
16:00	313	320	326	306	305	354	331	317	321	308	354	340	344	330	310	325.26667
18:00	314	320	327	306	305	353	331	318	320	309	354	339	343	331	313	325.53333
20:00	315	321	329	306	304	352	331	322	321	311	348	341	346	332	313	326.13333
22:00	310	320	327	304	304	355	333	319	320	311	346	344	347	330	311	325.4
0:00	338	335	329	320	315	348	350	347	338	323	350	343	343	334	323	335.73333
2:00	339	336	330	322	317	349	352	349	339	324	351	345	344	336	326	337.26667
4:00	338	335	329	321	316	348	350	349	338	323	351	345	344	336	326	336.6
average	334.7	333.8	333.2	320.2	317.5	352.8	336.8	325.7	326	313.4	349.3	339.8	343.2	328.8	312	

TABLE I-1
TEMPERATURE PROFILE
FOR WES OPERATION
(continued)

date	TE1-1W	TE1-2W	TE1-3W	TE1-4W	TE1-5W	TE2-1W	TE2-2W	TE2-3W	TE2-4W	TE2-5W	TE3-1W	TE3-2W	TE3-3W	TE3-4W	TE3-5W	average
2-Feb																
6:00	331	323	326	317	306	350	314	328	321	311	331	332	309	321	331	323.4
8:00	328	322	325	318	305	349	311	325	320	309	331	330	309	319	330	322.0667
10:00	334	327	333	326	316	355	316	330	327	318	338	339	317	325	337	329.2
12:00	329	319	329	321	309	356	309	329	322	309	333	335	306	316	335	323.8
14:00	328	319	329	323	309	359	308	327	323	311	335	333	306	316	335	324.0667
16:00																0
18:00	328	319	332	323	309	359	311	325	320	311	336	334	301	309	333	323.3333
20:00	320	314	325	316	297	353	304	323	313	307	340	339	315	324	338	321.8667
22:00	321	310	321	311	296	354	320	330	327	316	337	336	311	320	333	322.8667
0:00	333	329	326	324	320	349	348	345	329	313	342	337	316	325	329	331
2:00	331	328	324	320	313	348	344	344	327	311	340	334	311	323	330	328.5333
4:00	329	324	322	313	299	347	324	332	324	312	329	328	312	321	329	323
average	328.3636	321.2727	326.5455	319.2727	307.1818	352.6364	319	330.7273	323	311.6364	335.6364	334.2727	310.2727	319.9091	332.7273	
3-Feb																
6:00	329	323	325	316	304	345	313	322	321	311	324	326	309	317	327	320.8
8:00	329	322	334	323	308	355	301	317	313	308	329	325	304	312	332	320.8
10:00	328	320	331	321	306	355	300	320	309	305	328	326	302	308	331	319.3333
12:00	355	350	349	348	343	372	368	367	353	336	365	358	337	348	352	353.4
14:00	356	351	348	348	343	373	372	370	354	335	366	357	337	349	352	354.0667
16:00	356	352	349	349	344	374	372	370	355	336	367	358	337	350	353	354.8
average	342.1667	336.3333	339.3333	334.1667	324.6667	362.3333	337.6667	344.3333	334.1667	321.8333	346.5	341.6667	321	330.6667	341.1667	

TABLE I-1
TEMPERATURE PROFILE
FOR WES OPERATION
(continued)

Date	TE1-1	TE1-2	TE1-3	TE1-4E	TE1-5	TE2-1	TE2-2	TE2-3	E2-4	TE2-5	TE3-1	E3-2	E3-3	TE3-4	TE3-5	Avg
2-Feb																
6:00	326	326	328	313	310	349	329	312	318	309	336	337	344	324	309	**324.66667**
8:00	326	325	325	311	308	347	326	306	319	310	337	334	341	323	308	**323.06667**
10:00	332	332	333	321	320	354	332	317	327	318	344	342	350	334	318	**331.6**
12:00	327	330	330	316	316	353	330	303	327	316	344	345	352	336	317	**329.46667**
14:00	327	330	330	315	314	353	331	302	326	315	343	345	351	334	316	**328.8**
16:00																
18:00	320	324	329	307	307	356	331	306	330	318	337	341	344	322	303	**325**
20:00	312	314	326	302	296	362	351	346	347	334	337	346	348	325	306	**330.13333**
22:00	329	327	331	314	312	356	342	331	335	315	340	338	341	321	299	**328.73333**
0:00	340	336	329	321	316	350	353	351	340	324	351	344	344	334	324	**337.13333**
2:00	322	321	319	307	297	339	332	323	323	302	329	332	332	312	291	**318.73333**
4:00	323	320	320	305	299	341	316	299	309	298	329	330	333	313	298	**315.53333**
average	325.8	325.9	327.3	312	308.6	350.9	333.9	317.8	327.4	314.5	338.8	339.5	343.6	325.3	308.1	
3-Feb																
6:00	323	320	322	308	304	340	313	302	312	301	335	334	337	319	304	**318.26667**
8:00	338	339	337	324	322	358	333	324	334	316	353	351	355	339	325	**336.53333**
10:00	338	338	337	324	323	358	335	319	332	316	352	351	355	340	321	**335.93333**
12:00	361	356	349	343	338	373	373	373	365	345	374	365	368	358	346	**359.13333**
14:00	360	355	348	343	337	371	373	374	365	344	373	364	368	358	346	**358.6**
15:00	361	356	349	343	338	371	373	375	366	345	374	365	368	358	346	**359.2**
average	346.8	344	340.3	330.8	327	361.8	350	344.5	345.7	327.8	360.2	355	358.5	345.3	331.3	

TABLE I-2
WASTEWATER AND AIR FLOW RATES TO INDIVIDUAL WES NOZZLES

UNITS:
AIR = SCFM
H2O = GPM

Date	Time	"A" AIR	"A" H2O	"B" AIR	"B" H2O	"C" AIR	"C" H2O	"D" AIR	"D" H2O	"E" AIR	"E" H2O	"F" AIR	"F" H2O	"G" AIR	"G" H2O	"H" AIR	"H" H2O	"I" AIR	"I" H2O	"J" AIR	"J" H2O	"K" AIR	"K" H2O	"L" AIR	"L" H2O
25-Jan	6:00																								
	8.00																								
	10:00	244	0	481	0	237	0	225	0	409	0	243	0	201	0	220	0	229	0	217	0	250	0	78	0
	12:00																								
	14:00													163	2.7	182	2.3	189	2.1	175	3	250	0	76	0
	16.00	174	0.9	470	1	181	0 3	177	0.7	165	1.3	153	1.2	155	3.6	170	3.1	181	2.6	180	2.7	251	0	80	0
	18:00	187	0.9	457	0 9	183	0.5	177	0.9	184	1.4	161	1.2	164	3.4	183	2 8	187	2.7	189	2.7	193	3.2	85	0
	20.00	185	0.9	461	0.9	194	0	191	0.7	160	1.4	159	1.2	162	3.4	182	2.9	183	2.8	188	2.8	190	3.3	84	0
	22.00	184	0.9	458	0.9	193	0	192	0.7	173	1.4	162	1.2	162	3.4	183	2.8	183	2.7	188	2.7	189	3.2	84	0
	0:00																								
	2:00																								
	4:00																								
	average	194 8		465.4		197.6		192.4		218.2		175 6		167.8333		186 6667		192		189.5		220.5		81.16667	
	Time	"A" AIR	"A" H2O	"B" AIR	"B" H2O	"C" AIR	"C" H2O	"D" AIR	"D" H2O	"E" AIR	"E" H2O	"F" AIR	"F" H2O	"G" AIR	"G" H2O	"H" AIR	"H" H2O	"I" AIR	"I" H2O	"J" AIR	"J" H2O	"K" AIR	"K" H2O	"L" AIR	"L" H2O
26-Jan	6:00	252	0	479	0	231	0	0	0	231	0	252	0	210	0	234	0	235	0	229	0	248	0	82	0
	8:00	192	0.7	460	0.9	184	0.4	181	0.7	223	1.5	161	1.2	176	2.4	201	1.6	199	1.9	196	2	201	2.5	80	0
	10:00	206	0.4	465	0.8	197	0	197	0.3	249	1.1	178	0.9	167	3.1	190	2.4	182	2.9	187	2.7	259	0	34	0
	12:00	184	0.9	452	0.9	183	0.6	175	0.8	199	1.3	170	1.1	170	3	196	2.2	184	2.7	192	2.5	3	0	10	0
	14.00	178	1	475	0.9	176	0.6	171	0 8	200	1.4	170	1.1	166	3.1	192	2.5	181	3	189	2.7	3	0	10	0
	16.00	181	0 9	478	0.8	179	0.5	172	0.8	192	1.3	173	1	169	3	192	2.4	182	2.7	187	2.6	208	2.4	185	2.9
	18:00	179	0.9	486	0 8	177	0.5	173	0.8	192	1.4	174	0.9	162	3.3	187	2.6	177	2 8	185	2.6	196	2.9	182	3.3
	20:00	175	1	457	0.8	180	0.5	172	0.8	190	1.4	175	0.9	164	3 4	188	2 6	187	3.3	187	2.5	194	3	182	3.3
	22:00																								
	0.00																								
	2.00	252	0	472	0	232	0	0	0	240	0	252	0	210	0	234	0	235	0	230	0	247	0	83	0
	4.00	254	0	469	0	233	0	235	0	252	0	254	0	211	0	234	0	236	0	231	0	247	0	79	0
	average	205.3		469.3		197.2		184.5		216.8		195.9		180.5		204.8		199.8		201.3		180 6		92.7	

TABLE I-2
WASTEWATER AND AIR FLOW RATES TO INDIVIDUAL WES NOZZLES
(continued)

	Time	"A" AIR	"A" H2O	"B" AIR	"B" H2O	"C" AIR	"C" H2O	"D" AIR	"D" H2O	"E" AIR	"E" H2O	"F" AIR	"F" H2O	"G" AIR	"G" H2O	"H" AIR	"H" H2O	"I" AIR	"I" H2O	"J" AIR	"J" H2O	"K" AIR	"K" H2O	"L" AIR	"L" H2O
27-Jan	6:00	211	0.4	454	0.8	177	0.4	182	0.6	166	1.5	164	1.2	166	3.3	186	2.7	178	3	184	2 8	197	2.9	183	3.3
	8:00	208	0.6	450	0.7	184	0	190	0.4	193	1.5	164	1.2	163	3.3	186	2.7	171	3	184	2.7	195	2 9	183	3.4
	10:00	169	1.1	461	0.9	174	0	178	0.7	190	1.6	164	1.2	161	3.4	185	2.8	182	3.3	184	2.6	187	3.3	177	3.7
	12:00	169	1.1	460	0.9	203	0	213	0	167	1.4	167	1.1	156	3.8	176	3.3	174	3.3	174	3.4	174	4.2	173	3.9
	14:00	169	1.1	470	0.9	173	0	174	0.7	182	1.5	160	1.3	156	3.8	176	3.3	176	3	172	3.3	172	4	173	3 8
	16:00	167	1.1	452	0.8	171	0	172	0.7	187	1.4	161	1.2	155	3.8	176	3.3	168	3.4	167	3 6	172	4	175	3.8
	18:00	173	1	452	0.8	176	0	179	0.7	171	1.1	164	1.2	159	3.5	180	3	178	4	169	3.2	179	3.6	176	3.6
	20:00	189	0.7	468	0.6	173	0.2	171	0.7	170	1	174	0.9	175	2.1	209	1	175	2.8	174	3	188	3	184	3.1
	22:00	187	0.7	458	0.6	171	0.2	171	0.7	175	1.1	174	0 9	174	2.1	210	1	177	2.8	174	3.1	185	3	183	3
	0:00																								
	2:00																								
	4:00																								
	average	182.4444	0.866667	458.3333	0.777778	178	0.088889	181.1111	0 577778	177.8889	1.344444	165.7778	1.133333	162.7778	3.233333	187.1111	2.566667	175.4444	3.177778	175.7778	3 077778	183.2222	3.433333	178.5556	3.511111
	Time	"A" AIR	"A" H2O	"B" AIR	"B" H2O	"C" AIR	"C" H2O	"D" AIR	"D" H2O	"E" AIR	"E" H2O	"F" AIR	"F" H2O	"G" AIR	"G" H2O	"H" AIR	"H" H2O	"I" AIR	"I" H2O	"J" AIR	"J" H2O	"K" AIR	"K" H2O	"L" AIR	"L" H2O
28-Jan	6:00	236	0 8	453	0 5	171	0.5	162	1	161	1.2	166	1.2	173	2.9	192	2.4	176	2.9	174	3.3	189	3.1	182	3.6
	8:00	193	0.9	465	0.8	166	0.7	158	1	169	1	174	1	168	3	191	2.4	167	2.9	172	3.3	192	2.6	181	3.2
	10:00	191	0.9	459	0.8	172	0.3	169	0.7	167	1.2	163	1.2	168	3	192	2.3	173	2.9	172	3.2	191	2.8	180	3.2
	12:00	189	0.8	447	0.8	172	0.4	169	0.7	177	1.2	163	1.2	167	3	191	2.3	169	3.1	174	3 2	191	2.8	179	3.2
	14:00	190	0.8	450	0 8	171	0 3	169	0.7	165	1.3	163	1.2	165	2.9	189	2.4	172	2.9	171	3.4	192	2.7	179	3.2
	16 00	186	0.9	445	0.5	175	0.3	165	0.7	192	1.1	172	1	163	3.2	185	2.7	173	2.9	168	3.4	190	2.7	179	3 2
	18:00	221	0.9	454	0.6	175	0.3	166	0.8	188	1.3	158	1.3	161	3.2	183	2.7	173	2.9	168	3.4	182	3.2	176	3.6
	20:00	220	0.9	438	0.6	175	0.3	166	0.8	180	0.5	184	0.4	140	3.1	151	2.7	176	3.1	168	3.5	179	3.4	173	3.7
	22:00	219	0.7	445	0.6	206	0	204	0	160	1.1	164	1	145	3.5	153	3.1	170	2 9	166	3.5	180	3.5	173	3.7
	0:00	219	0.7	445	0.6	206	0	203	0	142	1.2	164	1	147	3.4	156	3	169	2.9	165	3.6	177	3.4	172	3.7
	2:00	216	0.7	436	0.6	205	0	200	0	163	0.5	200	0.3	150	3.5	157	3.1	171	3.3	166	3.5	175	3.5	172	3.8
	4.00	172	1.1	444	0.7	171	0.3	161	0.9	172	1.1	167	1	154	3.4	160	2.9	173	3.1	169	3.3	178	3.3	173	3.6
AVERAGE		204.3333	0.841667	448.4167	0.658333	180.4167	0.283333	174.3333	0.608333	168.8333	1.058333	169.8333	0.983333	158.4167	3.175	175	2.666667	171.8333	2.983333	169.4167	3.383333	184.6667	3.083333	176.5833	3.475

TABLE I-2
WASTEWATER AND AIR FLOW RATES TO INDIVIDUAL WES NOZZLES
(continued)

	Time	"A" AIR	"A" H2O	"B" AIR	"B" H2O	"C" AIR	"C" H2O	"D" AIR	"D" H2O	"E" AIR	"E" H2O	"F" AIR	"F" H2O	"G" AIR	"G" H2O	"H" AIR	"H" H2O	"I" AIR	"I" H2O	"J" AIR	"J" H2O	"K" AIR	"K" H2O	"L" AIR	"L" H2O
29-Jan	6:00	164	1	448	0.7	185	0	178	0.7	155	0 8	193	0.5	103	0.5	114	0	166	3.4	169	3.5	176	3.6	173	3.8
	8:00	FROZEN	0		0		0		0		0		0		0		0		0		0		0		0
	10:00	FROZEN	0		0		0		0		0		0		0		0		0		0		0		0
	12:00	203	0.8	459	0.7	181	0.4	170	0 8	333	0.8	171	1	196	0.8	219	0.5	207	1.2	200	1.6	255	0	156	1.2
	14:00	198	0.8	447	0.7	182	0.4	169	0.8	332	0.8	170	1	195	0.7	217	0.5	209	0.9	200	1.7	258	0	154	1.3
	16:00	190	0.6	82	1.2	162	0.9	162	0 9	337	0.7	175	0.9	164	3.2	187	2.7	186	2.5	179	3.2	212	1.9	140	3.3
	18:00	190	0.6	82	1.2	168	0.8	167	0.8	324	1.3	164	1.1	164	3.2	188	2.6	180	2.6	176	3.1	210	1.9	138	3 3
	20:00	189	0.6	82	1.2	161	0.8	165	0.8	323	1.3	163	1.1	163	3.2	190	2.6	181	2.5	175	3.1	207	2	138	3.3
	22.00	187	0.6	81	1.2	163	0.8	168	0.8	323	1.3	164	1.1	163	3.3	190	2.6	184	2.5	176	3.2	205	2.1	138	3 2
	0:00																								
	2:00	187	0.7	82	1.3	165	0.7	168	0.8	332	1.2	166	1	167	3	190	2.5	177	2.7	173	3.3	204	2.1	155	3.4
	4:00	184	0.7	80	1.2	161	0.8	166	0.8	327	1.2	168	1	160	3 6	184	3	179	2.7	175	3.4	194	2.5	154	3.7
AVERAGE																									
	Time	"A" AIR	"A" H2O	"B" AIR	"B" H2O	"C" AIR	"C" H2O	"D" AIR	"D" H2O	"E" AIR	"E" H2O	"F" AIR	"F" H2O	"G" AIR	"G" H2O	"H" AIR	"H" H2O	"I" AIR	"I" H2O	"J" AIR	"J" H2O	"K" AIR	"K" H2O	"L" AIR	"L" H2O
30-Jan	6:00	182	0.7	79	1.2	158	0.8	165	0.8	328	1.2	169	1	158	3.6	184	2.9	178	2.7	173	3.3	193	2.6	154	3.7
	8:00	170	1	74	1.4	161	0.6	175	0.5	325	1.4	162	1.1	157	3.6	184	3	174	2.8	171	3.5	194	2.6	155	3.7
	10.00	170	1	76	1.4	153	0.9	160	0.9	338	1.1	154	1.3	166	3.1	171	3.7	185	2.2	173	3.4	171	4.1	155	3.8
	12:00																								
	14:00	230	0	62	0	158	0.8	148	1.4	322	1	164	1.1	156	3.8	172	3.7	181	2.7	162	4.3	173	4	158	3.7
	16:00	229	0.1	59	0	158	0.8	144	1.3	317	1.1	164	1.1	155	3.9	167	4	181	2.7	159	4.2	167	4.4	156	3.9
	18:00	230	0.1	59	0	160	0.7	144	1.4	315	1.2	158	1.2	154	3.9	167	4	180	2.7	160	4.2	168	4.4	158	3.9
	20:00																								
	22.00	230	0.1	51	0	169	0.4	177	0.7	321	1.5	150	1.5	191	0.5	226	0	184	2.1	174	3.5	211	1.8	170	2.3
	0.00	230	0.1	52	0	172	0.3	175	0.8	326	0 4	174	0.8	193	1	227	0	204	0.5	199	1	233	0	172	1.6
	2:00	232	0.1	55	0	169	0 6	154	1.2	162	0.6	150	0.9	126	4.3	132	4.3	194	1.8	176	3.1	210	1.7	175	2
	4.00	232	0.1	49	0	173	0.5	149	1.2	159	0.6	162	0 8	143	3.1	152	2.9	192	1.8	171	3 3	190	2.7	170	2.7

TABLE I-2
WASTEWATER AND AIR FLOW
RATES TO INDIVIDUAL WES NOZZLES
(continued)

	Time	"A" AIR	"A" H2O	"B" AIR	"B" H2O	"C" AIR	"C" H2O	"D" AIR	"D" H2O	"E" AIR	"E" H2O	"F" AIR	"F" H2O	"G" AIR	"G" H2O	"H" AIR	"H" H2O	"I" AIR	"I" H2O	"J" AIR	"J" H2O	"K" AIR	"K" H2O	"L" AIR	"L" H2O
31-Jan	6:00	234	0.1	46	0	173	0.5	148	1.3	70	0	71	0	41	0.1	36	0	193	1.9	176	3.3	190	2.9	172	2.7
	8:00	244	0.3	62	0.3	176	0.5	156	1.2	24	0	17	0	28	0.2	33	0	190	2.3	162	4	179	4	170	3.1
	10:00	236	0.3	0	0	178	0.7	151	1.4	247	1.4	153	1.6	167	3.4	185	3	206	2.1	174	3 8	211	2.4	170	2.5
	12:00	237	0.3	0	0	169	1	142	1.6	240	1.2	184	0.7	162	3.8	178	3.3	203	2.1	173	3.8	185	3.6	167	3
	14:00																								
	16:00	238	0.3	0	0.3	174	0.6	154	1.2	218	1.6	179	0.8	154	4.2	172	3.7	199	2.3	164	4.2	168	4 5	168	3.3
	18:00	239	0.3	0	0.3	172	0.6	152	1.2	219	1.7	179	0.8	154	4.2	171	3.7	198	2.2	165	4.3	167	4.5	167	3.2
	20:00	238	0.2	0	0.3	171	0.7	151	1.3	221	1.7	180	0.8	152	4.2	171	3.7	195	2.2	165	4.3	165	4.6	165	3.2
	22:00	240	0.3	0	0.3	170	0.6	151	1.3	222	1.7	180	0.8	153	4.3	172	3.6	194	2.2	162	4.3	164	4.6	164	3.2
	0.00	239	0.2	0	0.3	214	0	212	0	276	0	242	0	204	0.8	229	0	215	0	213	0.1	243	0	176	1.2
	2:00	242	0.2	0	0.3	179	0.5	169	1	238	1.7	181	1	168	3.2	188	2.7	188	2.4	156	4.8	175	4	163	3.1
	4.00	244	0.2	0	0.3	172	0.9	142	1.5	226	1.6	178	0 9	162	3 8	181	3.3	198	2.3	162	4.6	180	3.6	166	2.7
AVERAGE		239.1818	0.245455	9.818182	0.218182	177.0909	0.6	157.0909	1.181818	200.0909	1.145455	158.5455	0.672727	140.4545	2.927273	156	2.454545	198.0909	2	170.1818	3.772727	184.2727	3.518182	168	2.836364
	Time	"A" AIR	"A" H2O	"B" AIR	"B" H2O	"C" AIR	"C" H2O	"D" AIR	"D" H2O	"E" AIR	"E" H2O	"F" AIR	"F" H2O	"G" AIR	"G" H2O	"H" AIR	"H" H2O	"I" AIR	"I" H2O	"J" AIR	"J" H2O	"K" AIR	"K" H2O	"L" AIR	"L" H2O
1-Feb	6.00	243	0.2	0	0.3	220	0	217	0	226	1.6	186	0.7	161	3.7	181	3.1	200	1.9	169	3.7	181	3.4	162	2 5
	8:00	0	0	0	0	172	0.7	150	1.3	237	1.5	193	0.6	161	3.7	183	3.1	197	2.2	163	4.1	172	3.9	161	2.7
	10.00	0	0	0	0.3	173	0.7	149	1.4	236	1.5	193	0.6	161	3.7	183	3	198	2.2	164	4 1	173	3.9	161	2.7
	12.00	0	0	0	0.2	174	0.6	148	1.4	235	1.5	194	0.6	159	3.7	183	3	198	2.2	164	4.1	172	4	161	2.6
	14.00	175	1.1	158	1.1	173	0.6	151	1.3	233	1.5	195	0.6	163	3.7	186	2.9	194	2.2	166	4	172	3.9	161	2.5
	16:00	172	1.2	156	1.1	174	0.6	148	1.3	230	1.5	196	0.5	161	3.6	186	2.9	195	2.1	165	3 9	172	3.9	161	2.5
	18:00	170	1.2	155	1.1	174	0.6	149	1.3	231	1.5	197	0.5	161	3.6	186	2.9	196	2.1	162	4	171	4	161	2.5
	20.00	169	1.2	154	1.1	175	0.6	148	1.3	237	1.5	198	0.5	161	3.6	187	2.9	195	2.1	165	4	170	3.9	161	2.5
	22:00	167	1.2	154	1.1	171	0.6	144	1.3	233	1.5	198	0.5	158	3.7	187	2.8	193	2.1	162	4	167	4	160	2.5
	0:00	228	0.2	216	0.3	199	0	200	0	264	0	238	0	185	1.3	228	0	213	0	199	0.4	217	0	171	0.6
	2:00	228	0.2	216	0.3	198	0	200	0	269	0	239	0	179	1	229	0	214	0	199	0.3	219	0	172	0.7
	4.00	229	0.2	217	0.3	198	0	201	0	275	0	238	0	179	0.9	229	0	214	0	201	0.3	221	0	171	0.7
average		197.8889	0.744444	178.25	0.654545																				

TABLE I-2
WASTEWATER AND AIR FLOW RATES TO INDIVIDUAL WES NOZZLES
(continued)

	Time	"A" AIR	"A" H2O	"B" AIR	"B" H2O	"C" AIR	"C" H2O	"D" AIR	"D" H2O	"E" AIR	"E" H2O	"F" AIR	"F" H2O	"G" AIR	"G" H2O	"H" AIR	"H" H2O	"I" AIR	"I" H2O	"J" AIR	"J" H2O	"K" AIR	"K" H2O	"L" AIR	"L" H2O
2-Feb	6:00	185	0.8	178	0.5	175	0	156	1.1	248	1.1	194	0.5	168	2.8	204	1.5	199	1.6	175	2.9	183	2.7	164	1.8
	8:00	188	0.8	178	0.4	179	0	154	1.1	248	1.1	196	0.5	169	2.7	203	1.5	200	1.6	173	3	184	2.6	164	1.8
	10:00	185	0.8	179	0.4	180	0	156	1.1	247	1.1	196	0.5	163	3.1	196	2.2	199	1.8	169	3.3	175	3.3	163	2.1
	12:00	177	1	169	0.7	175	0.2	149	1.3	244	1.3	193	0.5	157	3.7	185	2.9	196	2.1	165	3.8	172	3.7	161	2.5
	14:00	177	1	169	0.8	175	0.2	147	1.3	243	1.3	193	0.5	155	3.7	186	2.9	196	2.1	161	3.8	171	3.7	161	2.4
	16:00																								
	18.00	166	101	160	0.9	170	0.2	143	1.3	235	1.6	187	0.6	154	3.7	185	2.8	189	2.1	162	3.8	166	3.8	160	2.4
	20:00	162	1.2	160	1	196	0	197	0	239	1.4	190	0.5	155	4	184	3	187	2.2	157	4	178	2.6	163	1.7
	22:00	182	0.8	181	0.7	165	0.6	153	1.1	240	1.4	196	0.5	165	2.8	202	1.4	192	1.7	168	3.1	181	2.6	164	1.7
	0:00	224	0	228	0	198	0	197	0	262	0	249	0	200	0	242	0	217	0	204	0	217	0	177	0
	2:00	201	0.3	209	0	164	0.6	146	1.3	258	0	241	0	169	2.8	201	1.8	199	0.9	183	2.2	184	2.6	166	2
	4:00	184	0.8	184	0.6	170	0.6	147	1.2	255	1	200	0.4	171	2.5	212	0.7	205	0.8	188	1.9	203	1.2	167	1.5
average																									
	Time	"A" AIR	"A" H2O	"B" AIR	"B" H2O	"C" AIR	"C" H2O	"D" AIR	"D" H2O	"E" AIR	"E" H2O	"F" AIR	"F" H2O	"G" AIR	"G" H2O	"H" AIR	"H" H2O	"I" AIR	"I" H2O	"J" AIR	"J" H2O	"K" AIR	"K" H2O	"L" AIR	"L" H2O
3-Feb	6:00	188	0.7	183	0.6	170	0.6	148	1.2	256	0.8	207	0.3	172	2.3	209	0.9	204	1.2	182	2.5	193	2	163	1.8
	8.00	188	0.7	183	0.6	167	0.5	147	1.2	260	0.9	209	0.2	158	3.7	186	2.8	181	2.7	156	4.4	168	3.8	159	2.8
	10:00	188	0.7	185	0.6	169	0.5	152	1.2	259	0.8	212	0.2	157	3.7	186	2.8	180	2.8	156	4.4	166	3.9	159	2.7
	12:00	216	0	217	0.2	189	0	195	0	269	0	246	0	185	1.3	232	0	213	0	199	0.5	215	0	173	0.6
	14:00	210	0	212	0	189	0	194	0	270	0	242	0	183	0	232	0	212	0	199	0	217	0	173	0
	15:00	213	0	215	0	191	0	197	0	278	0	244	0	183	0	232	0	213	0	200	0	217	0	173	0

APPENDIX J
REFERENCES

1. 1990 Annual Book of ASTM Standards; Section 5: Petroleum Products, Lubricants, and Fossil Fuels, Vol. 5.05: Gaseous Fuels; Coal and Coke, ASTM, Philadelphia, PA, 1990.

2. 1990 Annual Book of ASTM Standards; Section 4: Construction, Vol. 4.01: Cement; Lime; Gypsum, ASTM, Philadelphia, PA, 1990.

3. Test Methods for Evaluating Solid Waste; November 1986, SW-846, 3rd ed.; U.S. Environmental Protection Agency. Office of Solid Waste and Emergency Response. U.S. Government Printing Office: Washington, DC, 1986. Vols. 1, 2.

4. Methods for Chemical Analysis of Water and Wastes; Environmental Monitoring and Support Laboratory. U.S. Environmental Protection Agency, Office of Research and Development. Cincinnati, OH, March 1983; EPA-600/4-79-020.

5. Code of Federal Regulations, Title 40 - Protection of Environment, Part 261.21, Characteristic of Ignitability. U.S. Environmental Protection Agency. U. S. Government Printing Office: Washington, DC, July 1992.

6. Varian Analytical Methods for Graphite Tube Atomizers; Rothery, E. Ed.; Varian Techtron Pty. Limited, Mulgrave, Victoria, Australia, 1982.

7. FGD Chemistry and Analytical Methods Handbook; Chemical and Physical Test Methods, Electric Power Research Institute, EPRI CS-3612, Vol. 2, Project 1031-4; Palo Alto, CA, July 1984.

8. Standard Methods for the Examination of Water and Wastewater; 17th ed.; Clesceri, L. S. et al., Eds.; American Public Health Association: Washington, DC, 1989.

9. Standard Methods for the Examination of Water and Wastewater; 16th ed.; Greenberg, A. E. et al., Eds.; American Public Health Association: Washington, DC, 1985.

10. Sampling and Analysis Procedure, Elkraft AVV Project, Drawing no. 7799 B406-00100, Rev. P; Mitsubishi Heavy Industries, LTD: Tokyo, Japan; August 1989.

11. Kriebel B. W., Pure Air Laboratory Notebook No. 1000, Pure Air on the Lake: Chesterton, IN, March 1992.

12. Chemical Gypsum Test Methods, USG Corporation Research Center: Libertyville, IL, 1989.

13. Kanare H. M., Chemical and Physical Analyses for Bailly FGD Project, Construction Technology Laboratories Inc; Project No. 404058, Skokie, IL.

14. Safe Work Practices for R&D Laboratories, Vols. 1, 2; R&D Safety Policy Committee, Air Products and Chemicals, Inc: Allentown, PA; September 1992.