# APPENDIX 1

# PROCESS FLOW DIAGRAMS

## TURBINE HEAT BALANCE DIAGRAMS

| | |
|---|---|
| 170X443-30 | RATED OUTPUT (297.5 MW) WITH BED ASH COOLING |
| 170X443-26 | 75% VWO THROTTLE FLOW (235.8 MW) |
| 170X443-27 | 50% VWO THROTTLE FLOW (153.6 MW) |
| 170X443-28 | 25% VWO THROTTLE FLOW (70.2 MW) |

## BOILER PROCESS AND INSTRUMENT DIAGRAMS

| | |
|---|---|
| 43-7587-5-6100 | P&ID LEGEND SHEET |
| 43-7587-5-6101 | P&ID LEGEND SHEET |
| 43-7587-5-6102 | P&ID WATER SIDE |
| 43-7587-5-6103 | P&ID STEAM & WATER FLOW |
| 43-7587-5-6104 | P&ID SOOTBLOWER SYSTEM |
| 43-7587-5-6105 | P&ID SECONDARY AIR |
| 43-7587-5-6106 | P&ID PRIMARY AIR |
| 43-7587-5-6107 | P&ID INTREX “C” INTERMEDIATE SUPERHEATER 1 |
| 43-7587-5-6108 | P&ID ELBOW DUCT BURNER A |
| 43-7587-5-6109 | P&ID FLUE GAS |
| 43-7587-5-6110 | P&ID FUEL FEED (FRONT WALL) |
| 43-7587-5-6111 | P&ID FUEL FEED (FRONT WALL) |
| 43-7587-5-6112 | P&ID FUEL FEED (REAR WALL) |
| 43-7587-5-6113 | P&ID LIMESTONE SYSTEM |
| 43-7587-5-6114 | P&ID LIMESTONE SYSTEM |
| 43-7587-5-6115 | P&ID LIMESTONE SYSTEM |
| 43-7587-5-6116 | P&ID SIDEWALL STRIPPER/COOLER D |
| 43-7587-5-6117 | P&ID FRONT WALL STRIPPER/COOLER C |
| 43-7587-5-6118 | P&ID AMMONIA SYSTEM |
| 43-7587-5-6119 | P&ID AMMONIA SYSTEM |
| 43-7587-5-6120 | P&ID SEAL POT BLOWER SYSTEMS |
| 43-7587-5-6122 | P&ID INTREX “B” INTERMEDIATE SUPERHEATER 2 |
| 43-7587-5-6123 | P&ID INTREX “A” FINISHING SUPERHEATER |
| 43-7587-5-6124 | P&ID SIDEWALL STRIPPER/ COOLER A |
| 43-7587-5-6125 | P&ID FRONT WALL STRIPPER/COOLER B |
| 43-7587-5-6126 | P&ID ELBOW DUCT BURNER B |
| 43-7587-5-6127 | P&ID ELBOW DUCT BURNER C |
| 43-7587-5-6128 | P&ID CYCLONES |
| 43-7587-5-6129 | P&ID STRIPPER / COOLERS CONDENSATE COOLING WATER |
| 43-7587-5-6130 | P&ID FAN AND GEARBOX COOLING WATER |
| 43-7587-5-6131 | P&ID INSTRUMENT AIR SUPPLY |
| 43-7587-5-6132 | P&ID INSTRUMENT AIR SUPPLY |
| 43-7587-5-6133 | P&ID SERVICE AIR SUPPLY |
| 43-7587-5-6134 | P&ID BURNER A |
| 43-7587-5-6135 | P&ID BURNER B |
| 43-7587-5-6136 | P&ID BURNER C |

## Limestone Preparation System Flow Diagram

| | |
|---|---|
| 9928-FD-L1 | SYSTEM FLOW DIAGRAM |

## AIR QUALITY CONTROL SYSTEM FLOW DIAGRAMS

| | | |
|---|---|---|
| 3847-3-001 | PROCESS FLOW DIAGRAM | SHEET #1 OF 2 |
| 3847-3-002 | PROCESS FLOW DIAGRAM | SHEET #2 OF 2 |
| 3847-001 | AQCS SYSTEM MASS BALANCES | |
| 3847-001-100-4 | 100% COKE: PERFORMANCE | |
| 3847-001-100-5 | 100% COKE: PERFORMANCE | |
| 3847-001-100-6 | 100% COKE: PERFORMANCE | |
| 3847-001-100-22 | 100% COKE: PERFORMANCE | |
| 3847-001-100-23 | 100% COKE: PERFORMANCE | |
| 3847-001-100-24 | 100% COKE: PERFORMANCE | |
| 3847-3-100 | PIPING LEDGEND | |
| 3847-3-101 | INSTRUMENTATION & CONTROLS LEDGEND | |
| 3847-3-110 | SPRAY DRYER ABSORBER | |
| 3847-3-111 | FABRIC FILTER | |
| 3847-3-112 | I.D. FAN & STACK | |
| 3847-3-113 | RECYCLE SLURRY PREPARATION SYSTEM | |
| 3847-3-114 | SDA FEED SLURRY PREPARATION SYSTEM | SHEET #1 OF 2 |
| 3847-3-115 | SDA FEED SLURRY PREPARATION SYSTEM | SHEET #2 OF 2 |
| 3847-3-116 | LIME SLURRY STORAGE AND RECIRCULATION LOOP | |
| 3847-3-118 | FLUIDIZING AIR BLOWERS | |
| 3847-3-120 | BALL MILL SLAKING SYSTEM A | |
| 3847-3-121 | LIME SLURRY TRANSFER SYSTEM A | |
| 3847-3-122 | BALL MILL SLAKING SYSTEM B | |
| 3847-3-123 | LIME SLURRY TRANSFER SYSTEM B | |
| 3847-3-130 | AIR COMPRESSOR SYSTEM | |
| 3847-3-131 | GLYCOL COOLING SYSTEM | SHEET #1 OF 2 |
| 3847-3-132 | GLYCOL COOLING SYSTEM | SHEET #2 OF 2 |
| 3847-3-133 | INSTRUMENT AIR SYSTEM | |
| 3847-3-134 | ATOMIZING/SERVICE AIR SYS. | |
| 3847-3-135 | REUSE WATER SYSTEM | |
| 3847-3-136 | SERVICE WATER SYSTEM | |

## ASH HANDLING PIPING AND INSTRUMENT DIAGRAMS

| | |
|---|---|
| 514-55700-1 | P&ID GENERAL NOTES – FLY ASH/BED ASH |
| 514-55700-2 | P&ID STANDARD SYMBOLS - FLY ASH/BED ASH |
| 514-55700-4 | P&ID FLY ASH VACUUM SYS UNIT 2 |
| 514-55700-6 | P&ID FLY ASH VACUUM SYS BAGHOUSE HOPPERS UNIT 2 |
| 514-55700-7 | P&ID FLY ASH CONVEYOR CROSSOVER TO FLY ASH SIL |
| 514-55700-8 | P&ID FLY ASH STORAG SILO ROOF EQUIP UNITS 1 & 2 |
| 514-55700-10 | P&ID FLY ASH VACUUM BLOWERS - UNITS 1 & 2 |
| 514-55700-14 Sht 1 | P&ID BED ASH DRY FLIGHT CONVEYORS - UNIT 2 |
| 514-55700-14 Sht 2 | P&ID BED ASH DRY FLIGHT CONVEYORS - UNIT 2 |
| 514-55700-15 | P&ID NUVA FEEDER AIR LCK FEEDER ASS'Y - UNIT 1&2 |
| 514-55700-16 | P&ID PRESSURE SYSTEM FLY ASH/BED ASH |
| 514-55700-17 | P&ID PRESSURE BLOWERS - FLY ASH/BED ASH |
| 514-55700-18 | P&ID BED ASH SILO UNITS 1 & 2 |
| M-55700-3 | KEY PROCESS DIAGRAM MATERIAL FLOWS UNITS 1 & 2 |

## WATER MASS BALANCE DIAGRAMS

| | |
|---|---|
| WMB-1 CASE 1 | WATER MASS BALANCE CELL 1 OF BSA ONLY |
| WMB-1 CASE 2 | WATER MASS BALANCE CELL 1 OF BSA ONLY |

## BALANCE OF PLANT PIPING AND INSTRUMENT DIAGRAMS (MAJOR SYSTEMS ONLY)

| | |
|---|---|
| CUU-M2001A | LEGEND |
| 2HF-M2343A | CONDENSATE-FLOW |
| 2HF-M2343B | CONDENSATE-FLOW |
| 2HF-M2343C | CONDENSATE-FLOW |
| 2HF-M2343D | CONDENSATE-FLOW |
| 2HK-M2604 | HIGH-PRESSURE HEATER DRAINS |
| 2HK-M2605A | LOW-PRESSURE HEATER DRAINS |
| 2HK-M2605B | LOW PRESSURE HEATER DRAINS |
| 2HP -M2344A | CONDENSATE POLISHING |
| 2HP -M2344B | CONDENSATE POLISHING |
| 2HP -M2344C | CONDENSATE POLISHING |
| 2MJ-M2523A | CONDENSATE SAMPLING AND ANALYSIS |
| 2MJ-M2523B | CONDENSATE SAMPLING AND ANALYSIS |
| 2QB-M2341A | FEEDWATER-BOILER FEED PUMP |
| 2QB-M2341B | FEEDWATER-BOILER FEED PUMP |
| 2QB-M2341C | FEEDWATER-BOILER FEED PUMP |
| 2QF-M2342A | BOILER FEED |
| 2QF-M2342B | BOILER FEED |
| 2SD -M2601A | HIGH PRESSURE EXTRACTION |
| 2SD -M2601B | HIGH PRESSURE EXTRACTION |
| 2SD -M2602 | LOW PRESSURE EXTRACTION |
| 2XE-M2264A | CONDENSER |
| 2XE-M2264B | CONDENSER |
| 2XE-M2264C | CONDENSER |
| 2XE-M2264D | CONDENSER |
| 2XE-M2264E | CONDENSER |
| 2XE-M2264F | CONDENSER |
| 2XL -M2263 | COOLING WATER-CIRCULATING WATER |
| CNL -M2642A | REUSE WATER SYSTEM |
| CNL -M2642B | REUSE WATER SYSTEM |
| CNL -M2642C | REUSE WATER SYSTEM |
| CNL -M2642D | REUSE WATER SYSTEM |

170X443-30 REV. 1

TURBINE AND EXTRACTION ARRANGEMENT IS SCHEMATIC ONLY

THE VALUE OF GENERATOR OUTPUT SHOWN ON THIS HEAT BALANCE IS AFTER ALL POWER FOR EXCITATION AND OTHER TURBINE-GENERATOR AUXILIARIES HAS BEEN DEDUCTED

PROGRAM NO 8.200

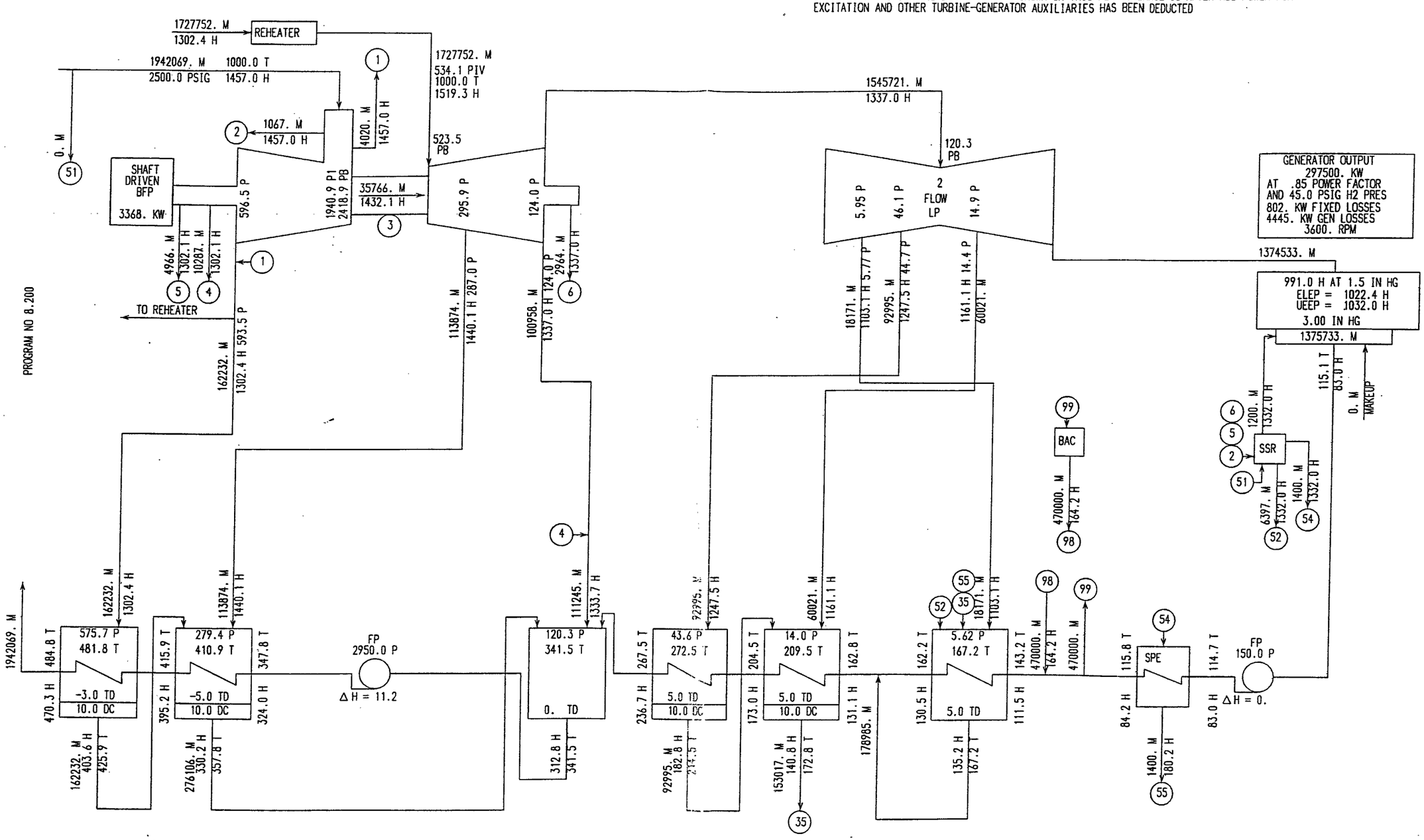


VALVE BEST POINT GROSS HEAT RATE (CUSTOMER DEFINED)

$$= \frac{1942069.\ (1457.0 - 470.3) + 1727752.\ (1519.3 - 1302.4)}{297500.} = 7701 \ \frac{\text{BTU}}{\text{KW-HR}}$$

JACKSONVILLE ELECTRIC AUTHORITY
NORTHSIDE UNITS #1 AND #2
TURBINE NO. 170X289/X443

2-ADMISSION HP/IP DENSE PACK DESIGN
THROTTLE FLOW TO MAINTAIN RATED GENERATOR
OUTPUT WITH BYPASS TO BED ASH COOLER.

LEGEND - CALCULATIONS BASED
ON 1967 ASME STEAM TABLES
M - FLOW-LB/HR
P - PRESSURE-PSIA
H - ENTHALPY-BTU/LB
T - TEMPERATURE-F DEGREES

297500. KW 3.00 IN HG ABS 0. PCT MU
TC2F 30.0 IN LSB 3600 RPM
2500.0 PSIG 1000. / 1000. T
GEN- 350000. KVA .85 PF LIQ 45.0 PSIG H2 PRES

GENERAL ELECTRIC COMPANY, SCHENECTADY NY

TURBINE ASSUMED TO BE IN NEW AND CLEAN CONDITION
170X443-30 REV. 1 02/07/2000
PAR

170X443-26

TURBINE AND EXTRACTION ARRANGEMENT IS SCHEMATIC ONLY

THE VALUE OF GENERATOR OUTPUT SHOWN ON THIS HEAT BALANCE IS AFTER ALL POWER FOR EXCITATION AND OTHER TURBINE-GENERATOR AUXILIARIES HAS BEEN DEDUCTED

PROGRAM NO 8.100

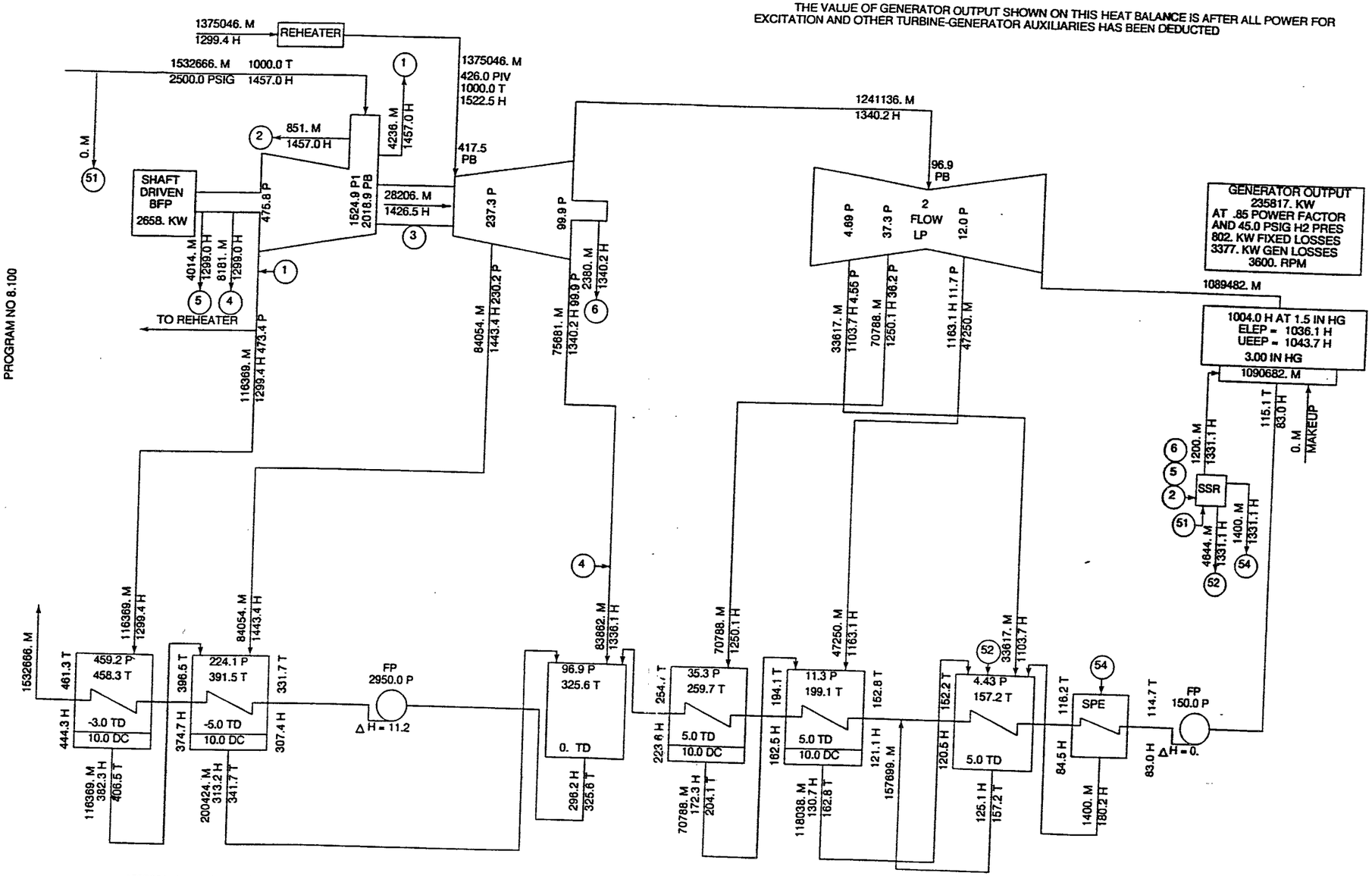


VALVE BEST POINT GROSS HEAT RATE (CUSTOMER DEFINED) = $\frac{1532666.\ (1457.0 - 444.3) + 1375046.\ (1522.5 - 1299.4)}{235817.}$ = 7883 BTU/KW-HR

JACKSONVILLE ELECTRIC AUTHORITY
NORTHSIDE UNITS #1 AND #2
TUBINE NO. 170X289/X443

**2-ADMISSION HP/IP DENSE PACK DESIGN**
**75.0% VWO THROTTLE FLOW**

LEGEND - CALCULATIONS BASED ON 1967 ASME STEAM TABLES
M - FLOW-LB/HR
P - PRESSURE-PSIA
H - ENTHALPY-BTU/LB
T - TEMPERATURE-F DEGREES

297500. KW 3.00 IN HG ABS
TC2F 30.0 IN LSB 3600 RPM
2500.0 PSIG 1000. / 1000. T
GEN- 350000. KVA .85 PF LIQ

0. PCT MU

45.0 PSIG H2 PRES

GENERAL ELECTRIC COMPANY, SCHENECTADY NY

TURBINE ASSUMED TO BE IN NEW AND CLEAN CONDITION

170X443-26

07/21/1999

170X443-27

TURBINE AND EXTRACTION ARRANGEMENT IS SCHEMATIC ONLY

THE VALUE OF GENERATOR OUTPUT SHOWN ON THIS HEAT BALANCE IS AFTER ALL POWER FOR EXCITATION AND OTHER TURBINE-GENERATOR AUXILIARIES HAS BEEN DEDUCTED

PROGRAM NO 8.100

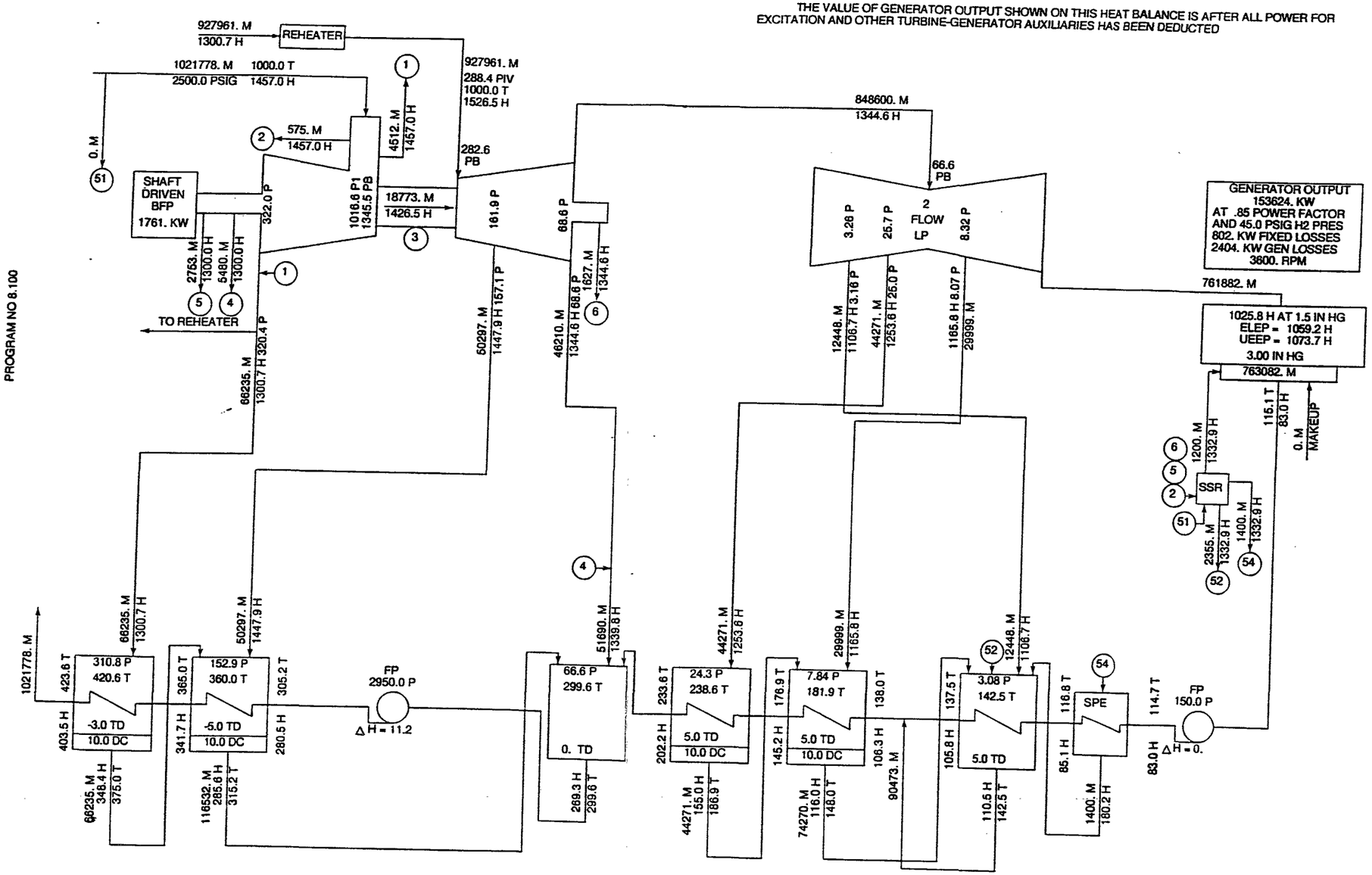


VALVE BEST POINT GROSS HEAT RATE (CUSTOMER DEFINED) = $\frac{1021778.\,(1457.0 - 403.5) + 927961.\,(1526.5 - 1300.7)}{153624.} = 8371 \ \frac{\text{BTU}}{\text{KW-HR}}$

JACKSONVILLE ELECTRIC AUTHORITY
NORTHSIDE UNITS #1 AND #2
TUBINE NO. 170X289/X443

2-ADMISSION HP/IP DENSE PACK DESIGN
50.0% VWO THROTTLE FLOW

LEGEND - CALCULATIONS BASED ON 1967 ASME STEAM TABLES
M - FLOW-LB/HR
P - PRESSURE-PSIA
H - ENTHALPY-BTU/LB
T - TEMPERATURE-F DEGREES

297500. KW 3.00 IN HG ABS 0. PCT MU
TC2F 30.0 IN LSB 3600 RPM
2500.0 PSIG 1000. / 1000. T
GEN- 350000. KVA .85 PF LIQ 45.0 PSIG H2 PRES

GENERAL ELECTRIC COMPANY, SCHENECTADY NY

TURBINE ASSUMED TO BE IN NEW AND CLEAN CONDITION

170X443-27

07/21/1999

170X443-28

TURBINE AND EXTRACTION ARRANGEMENT IS SCHEMATIC ONLY

THE VALUE OF GENERATOR OUTPUT SHOWN ON THIS HEAT BALANCE IS AFTER ALL POWER FOR EXCITATION AND OTHER TURBINE-GENERATOR AUXILIARIES HAS BEEN DEDUCTED

PROGRAM NO 8.100

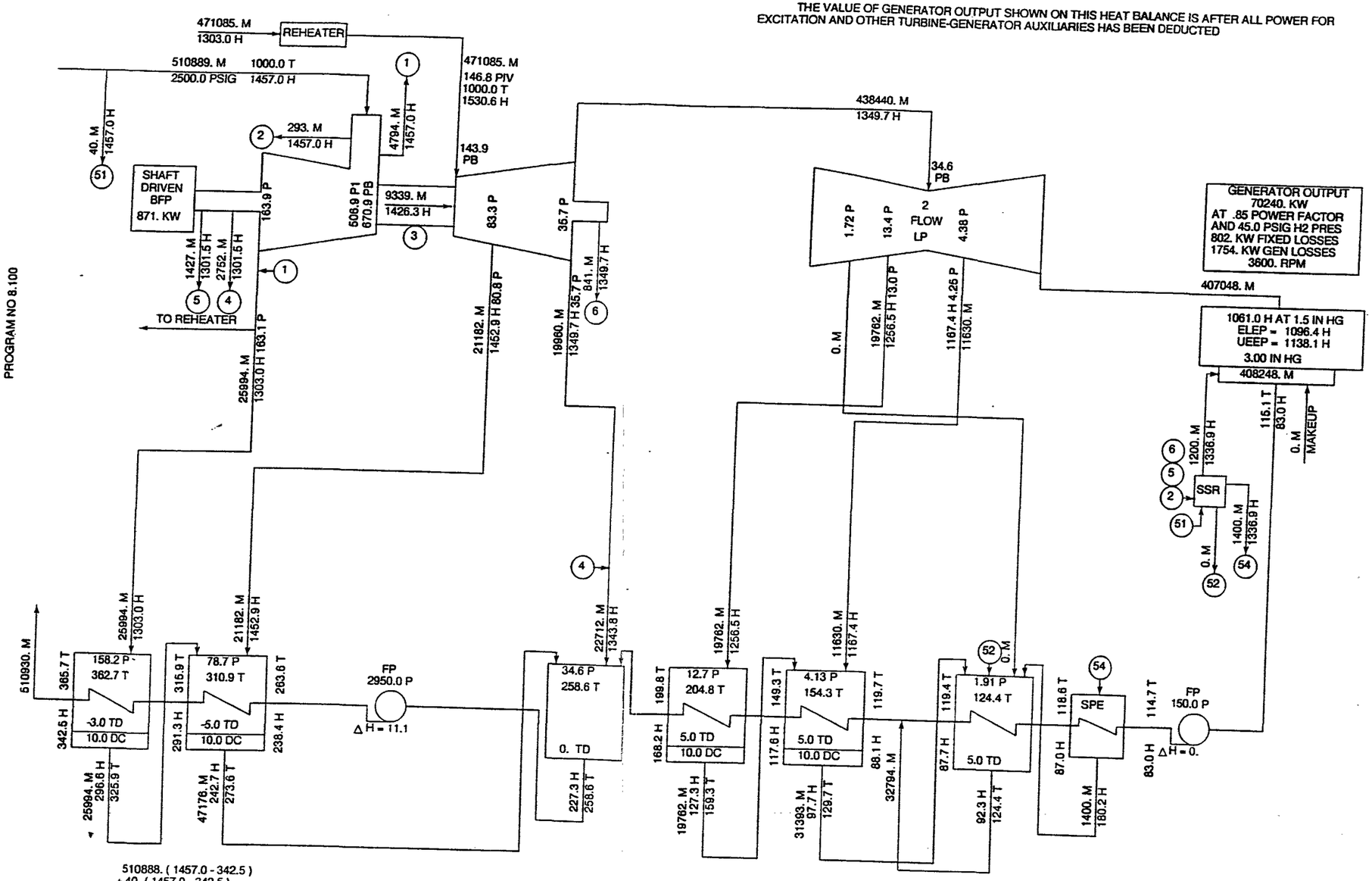


VALVE BEST POINT GROSS HEAT RATE (CUSTOMER DEFINED)

$$\frac{510888.\ (1457.0 - 342.5) + 40.\ (1457.0 - 342.5) + 471085.\ (1530.6 - 1303.0)}{70240.} = 9633 \ \frac{\text{BTU}}{\text{KW-HR}}$$

JACKSONVILLE ELECTRIC AUTHORITY
NORTHSIDE UNITS #1 AND #2
TUBINE NO. 170X289/X443

**2-ADMISSION HP/IP DENSE PACK DESIGN**
**25.0% VWO THROTTLE FLOW**

LEGEND - CALCULATIONS BASED ON 1967 ASME STEAM TABLES
M - FLOW-LB/HR
P - PRESSURE-PSIA
H - ENTHALPY-BTU/LB
T - TEMPERATURE-F DEGREES

297500. KW 3.00 IN HG ABS
TC2F 30.0 IN LSB 3600 RPM
2500.0 PSIG 1000. / 1000. T
GEN- 350000. KVA .85 PF LIQ

0. PCT MU

45.0 PSIG H2 PRES

GENERAL ELECTRIC COMPANY, SCHENECTADY NY

**TURBINE ASSUMED TO BE IN NEW AND CLEAN CONDITION**
170X443-28
07/21/1999

CRA33213 11-SEP-2002 15:29:59

# INSTRUMENT IDENTIFICATION (TABLE 1)

| FIRST-LETTERS | INITIATING OR INITIATED VARIABLE | CONTROLLERS RC RECORDING | CONTROLLERS IC INDICATING | CONTROLLERS C BLIND | CONTROLLERS CV SELF-ACTUATED CONTROL VALVE | Y SOLENOIDS, RELAYS COMPUTING DEVICES | READOUT DEVICES R RECORDING | READOUT DEVICES I INDICATING | SWITCHES AND ALARM DEVICES H HIGH | SWITCHES AND ALARM DEVICES L LOW | SWITCHES AND ALARM DEVICES HL COMBINATION | TRANSMITTERS RT RECORDING | TRANSMITTERS IT INDICATING | TRANSMITTERS T BLIND | MEASURING DEVICES E PRIMARY ELEMENT | MEASURING DEVICES P TEST POINT | W WELL OR PROBE | G VIEWING DEVICE GLASS | SAFETY DEVICE | V/Z FINAL CONTROL ELEMENT |
|---|---|---|---|---|---|---|---|---|---|---|---|---|---|---|---|---|---|---|---|---|
| A | ANALYSIS | ARC | AIC | AC | | Y | AR | A | ASH | ASL | ASHL | ART | AIT | AT | AE | AP | AW | | | AV |
| B | BURNER / COMBUSTION | BRC | BIC | BC | | Y | BR | BI | BSH | BSL | BSHL | BRT | BIT | BT | BE | | | BG | | BZ |
| C | USER'S CHOICE | | | | | | | | | | | | | | | | | | | |
| D | USER'S CHOICE | | | | | | | | | | | | | | | | | | | |
| E | VOLTAGE | ERC | EIC | EC | | | ER | EI | ESH | ESL | ESHL | ERT | EIT | ET | EE | | | | | EZ |
| F | FLOW RATE | FRC | FIC | FC | FCV | FY | FR | FI | FSH | FSL | FSHL | FRT | FIT | FT | FE | FP | | FG | | FV |
| FF | FLOW RATIO | FFRC | FFIC | FFC | | | FFR | FFI | FFSH | FFSL | SHL | FFRT | FFIT | FFT | FE | FFP | | FFG | | FFV |
| FQ | FLOW QUALITY | FQRC | FQIC | FQC | | | FQR | FQI | FQSH | FQSL | | FQRT | FQIT | FQT | FQE | FQP | | | | FQV |
| G | USER'S CHOICE | | | | | | | | | | | | | | | | | | | |
| H | HAND | | HIC | HC | HCV | | | | | | HS | | | | | | | | | HV |
| I | CURRENT (ELECTRICAL) | IRC | IIC | | | IY | IR | II | ISH | ISL | ISHL | IRT | IIT | IT | IE | | | | | IZ |
| J | POWER | JRC | JIC | | | JY | JR | JI | JSH | JSL | JSHL | JRT | JIT | JT | JE | | | | | JV |
| K | TIME OR TIME SCHEDULE | KRC | KIC | KC | KCV | KY | KR | KI | KSH | KSL | KSHL | KRT | KIT | KT | KE | | | | | KZ |
| L | LEVEL | LRC | LIC | LC | LCV | LY | LR | LI | LSH | LSL | LSHL | LRT | LIT | LT | LE | | LW | LG | | LV |
| M | USER'S CHOICE | | | | | | | | | | | | | | | | | | | |
| N | USER'S CHOICE | | | | | | | | | | | | | | | | | | | |
| O | USER'S CHOICE | | | | | | | | | | | | | | | | | | | |
| P | PRESSURE / VACUUM | PRC | PIC | PC | PCV | PY | PR | PI | PSH | PSL | SHL | PRT | PIT | PT | PE | | | | PSV | PV |
| PD | PRESSURE DIFFERENTIAL | PDRC | PDIC | PDC | PDCV | PDY | PDR | PDI | PDSH | PDSL | PDHL | PDRT | PDIT | PDT | PE | | | | | PDV |
| Q | QUANTITY | QRC | QIC | | | QY | QR | QI | QSH | QSL | QSHL | QRT | QIT | QT | QE | | | | | QZ |
| R | RADIATION | RRC | RIC | RC | | RY | RR | RI | RSH | RSL | RSHL | RRT | RIT | RT | RE | | RW | | | RZ |
| S | SPEED OR FREQUENCY | SRC | SIC | SC | SCV | SY | SR | SI | SSH | SSL | SSHL | SRT | SIT | ST | SE | | | | | SZ |
| T | TEMPERATURE | TRC | TIC | TC | TCV | | TR | TI | SH | SL | SHL | TRT | TIT | TT | TE | | TW | | TSE | TV |
| TD | TEMPERATURE DIFFERENTIAL | TDRC | TDIC | TDC | TDCV | TDY | TDR | TDI | TDSH | TDSL | TDSHL | | TDIT | TDT | TE | | TW | | | TDV |
| U | MULTI-VARIABLE | | | | | UY | UR | UI | | | | | | | | | | | | UV |
| V | VIBRATION/MACHINERY | VRC | VIC | VC | | VY | VR | VI | VSH | VSL | VSHL | VRT | VIT | VT | VE | | | | | VZ |
| W | WEIGHT OR FORCE | WRC | WIC | WC | WCV | WY | WR | WI | WSH | WSL | WSHL | WRT | WIT | WT | WE | | | | | WZ |
| WD | WEIGHT OR FORCE DIFF | WDRC | WDIC | WDC | WDCV | WDY | WDR | WDI | WDSH | WDSL | WDSHL | WDRT | WDIT | WDT | WDE | | | | | WDZ |
| X | UNCLASSIFIED | | | | | | | | | | | | | | | | | | | |
| Y | EVENT, STATE OR PRESENCE | | YIC | YC | | YY | YR | YI | YSH | YSL | | | | YT | YE | | | | | YZ |
| Z | POSITION/DIMEN | ZRC | ZIC | ZC | ZCV | ZY | ZR | ZI | | | | ZRT | ZIT | ZT | ZE | | | | | ZV |
| ZD | POSITION/DIMEN | ZDRC | ZDIC | ZDC | ZDCV | ZDY | ZDR | ZDI | ZDSH | ZDSL | ZDSHL | ZDRT | ZDIT | ZDT | ZDE | | | | | ZDV |

## THE TABLE BELOW IS A GUIDE FOR ADDING ABBREVIATIONS

| | FIRST - LETTER MEASURED OR INITIATING VARIABLE | FIRST - LETTER MODIFIER | SUCCEEDING LETTERS (FUNCTIONS) READOUT OR PASSIVE | SUCCEEDING LETTERS (FUNCTIONS) OUTPUT | SUCCEEDING LETTERS (FUNCTIONS) MODIFIER |
|---|---|---|---|---|---|
| A | ANALYSIS | AIR OPERATOR | ALARM | | |
| B | BURNER COMBUSTION | BLOCK | BLOCKING, USER'S CHOICE | USER'S CHOICE | USER'S CHOICE |
| C | CONDUCTIVITY | CONTROL | | CONTROL | CLOSE |
| D | DIFFERENTIAL | | DETECTOR | | |
| E | VOLTAGE | EMERGENCY | SENSOR (PRIMARY ELEMENT) | | |
| F | FLOW | RATIO, FLAME (FRACTION) | | | |
| G | USER'S CHOICE | GAGE | GLASS, VIEWING DEVICE | | |
| H | HAND | | | | HIGH |
| I | CURRENT (ELECTRICAL) | | INDICATE | | |
| J | POWER | SCAN | | | |
| K | TIME, TIME SCHEDULE | TIME RATE OF CHANGE | | CONTROL STATION | |
| L | LEVEL | | LIGHT | | LOW |
| M | MATERIAL | MOTOR OPERATOR, MOISTURE, MOMENTARY | | | MIDDLE INTERMEDIATE |
| N | FLAME | | USER'S CHOICE | USER'S CHOICE | USER'S CHOICE |
| O | USER'S CHOICE | | ORIFICE, RESTRICTION | | OPEN |
| P | PRESSURE, VACUUM | PRESSURE | POINT (TEST) CONNECTION | | |
| Q | QUANTITY | INTEGRATE, TOTALIZE | | | |
| R | RELIEF, RADIATION | | RECORD, REGULATOR | | |
| S | SPEED, FREQUENCY | SAFETY, SOLENOID | | SWITCH | |
| T | TEMPERATURE | | | TRANSMIT | |
| U | MULTIVARIABLE | CHECK | MULTIFUNCTION | MULTIFUNCTION | MULTIFUNCTION |
| V | VIBRATION, MECH. ANAL | | | VALVE, DAMPER, LOUVER | |
| W | WEIGHT, FORCE | | WELL | | |
| X | UNCLASSIFIED | X AXIS | NOZZLE | TRANSFORMER | UNCLASSIFIED |
| Y | EVENT, STATE | Y AXIS | | RELAY, COMPUTE, CONVERT | |
| Z | POSITION, DIMENSION | Z AXIS | | DRIVER, ACTUATOR, UNCLASSIFIED FINAL CONTROL ELEMENT | |

NOTE:

1. THIS TABLE IS NOT ALL-INCLUSIVE. ANY CONFLICT BETWEEN THIS TABLE AND THE JEA GEMS CODE SYSTEM, USE THE GEMS CODE.

* ALARM, THE ANNUNCIATING DEVICE MAY BE USED IN THE SAME FASHION AS S, SWITCH, THE ACTUATING DEVICE.

** THE LETTERS H AND L MAY BE OMMITED IN THE DEFINED CASE. THE LETTERS HH (HIGH-HIGH) AND LL (LOW-LOW) MAY BE ADDED WHEN REQUIRED.

## INSTRUMENT TAGGING

N01 B3 34 - PT 501 (symbol: B3 34-PT 501, XX)

- SEQUENCE NUMBER
- VALVE/INSTRUMENT ISA DESIGNATION
- VALVE/INSTRUMENT TYPE CODE
- EQUIPMENT GROUP/SYSTEM CODE
- PLANT & UNIT NUMBER

## XX - DENOTES THE FOLLOWING:

| | | | | | |
|---|---|---|---|---|---|
| CO | CARBON MONOXIDE | $NO_X$ | NITROGEN OXIDE | V | FWUSA |
| $CO_2$ | CARBON DIOXIDE | $O_2$ | OXYGEN | R/S | LIMESTONE PREP. PKG |
| DP | DIFFERENTIAL | R | RETRACT | | |
| I | INSERT | $SO_2$ | SULFUR DIOXIDE | | |

## INSTRUMENT LINE SYMBOLS

- INSTRUMENTS SUPPLY OR CONNECTION TO PROCESS
- PNEUMATIC SIGNAL
- MECHANICAL LINK
- ELECTRICAL SIGNAL
- CAPILLARY TUBE
- FIBER OPTICS

## CONTROL SYSTEM SYMBOLS

- DCS — DISTRIBUTED CONTROL SYSTEM
- BMS — BURNER MANAGEMENT SYSTEM
- DCS BASED DISPLAY
- CONTROL ROOM DISPLAY (NON-DCS)
- LOCAL DISPLAY (NON-DCS)
- SCS — SOOTBLOWER CONTROL SYSTEM
- PLC — PROGRAMMABLE LOGIC CONTROLLER

FOR MORE DETAILED INFORMATION SEE ISA STANDARDS ISA-S5.1 INSTRUMENTATION SYMBOLS AND IDENTIFICATION, AND ISA-S5.3 GRAPHIC SYMBOLS FOR DISTRIBUTED CONTROL/SHARED DISPLAY INSTRUMENTATION, LOGIC AND COMPUTER SYSTEMS.

## FLOW MEASUREMENT DEVICES

- AIR FOIL
- FLOW NOZZLE
- ORIFICE PLATE
- PITOT/STATIC PROBE ARRAY
- PITOT TUBE OR AVERAGING PITOT TUBE
- WEDGE METER
- VARIABLE AREA FLOW INDICATOR (ROTAMETER)
- VENTURI

## ABBREVIATIONS

| | | | |
|---|---|---|---|
| AS | AIR SUPPLY | PA | PLANT AIR |
| ES | ELECTRICAL SUPPLY | STR | STRAINER |
| FC | FAIL CLOSED | S.U.B. | START-UP BURNER |
| FO | FAIL OPEN | V.S.D. | VARIABLE SPEED DRIVE |
| FL | FAIL LOCKED IN LAST POSITION | ISH1 | INTERMEDIATE SUPERHEATER 1 |
| GS | GAS SUPPLY | ISH2 | INTERMEDIATE SUPERHEATER 2 |
| IA | INSTRUMENT AIR | FSH | FINISHING SUPERHEATER |
| LO | LOCK OPEN | | |
| N2 | NITROGEN SUPPLY | | |

## SCOPE BREAK / CROSS REFERENCE

THE FOLLOWING DENOTES A CHANGE IN SCOPE OF SUPPLY:

A) INSTRUMENTS AND EQUIPMENT ARE IN FWEC SCOPE OF SUPPLY UNLESS OTHERWISE NOTED.

FWEC ◄—► OTHERS

B) ALL PIPING, VALVES, INSTRUMENTS AND EQUIPMENT ARE IN OTHERS SCOPE OF SUPPLY UNLESS OTHERWISE NOTED.

## GENERAL NOTES

1. FWEC IS NOT RESPONSIBLE FOR CONTROLS OF EQUIPMENT OUTSIDE OF FWEC SCOPE OF SUPPLY. CONTROLS SHOWN FOR EQUIPMENT OUTSIDE OF FWEC SCOPE IS ONLY A SUGGESTED METHOD.
2. FOR FLUES AND DUCTS NON-PRESSURE PART TEST CONNECTIONS WILL CONSIST OF A 12" LONG PIPE NIPPLE WELDED AT THE LOCATION WITH A 2" CAP. ALL BOILER PRESSURE PART TEMPERATURE MEASUREMENT LOCATIONS SHALL INCLUDE A THERMOWELL; PRESSURE TAP LOCATIONS SHALL BE DOUBLE VALVED TO THE SOURCE. THERMOCOUPLES ARE PROVIDEED WITH THERMOWELL AND COMPLETE ASSEMBLY.
3. PRIMARY ELEMENTS AND THEIR ASSOCIATED ROOT VALVES WILL BE PROVIDED BY FWEC. INSTRUMENT PIPING, TUBING, FITTINGS AND ANY MATERIALS REQUIRED FOR INSTALLATION WILL BE PROVIDED BY OTHERS. INSTRUMENT INSTALLATION DETAILS ARE FOUND ON FWUSA DRAWING later.
4. MINIMUM 50 PSIG PLANT AIR WILL BE PROVIDED BY OTHERS.
6. ANY TEST CONNECTION (T) IN AN AIR OR GAS PATH (FLUES, DUCTS, SIDEWALLS ETC) MAY BE USED FOR EITHER PRESSURE OR TEMPERATURE MEASUREMENTS.
7. THE FWEC ALPHABETICAL DESIGNATIONS ON FWEC'S INSTRUMENT CONNECTION TAGS DO NOT USE THE LETTERS "I" AND "O".

## P & ID INDEX

| REV. | DRAWING NO. | TITLE | REMARKS |
|---|---|---|---|
| H | 43-7587-5-6100 | P & I DIAGRAM LEGEND SHEET | |
| D | 43-7587-5-6101 | P & I DIAGRAM LEGEND SHEET | |
| F | 43-7587-5-6102 | WATER SIDE P & ID | |
| G | 43-7587-5-6103 | STEAM & WATER FLOW P & ID | |
| G | 43-7587-5-6104 | SOOTBLOWER SYSTEM P & ID | |
| G | 43-7587-5-6105 | SECONDARY AIR P & ID | |
| G | 43-7587-5-6106 | PRIMARY AIR P & ID | |
| G | 43-7587-5-6107 | INTREX ISH1 P & ID | |
| F | 43-7587-5-6108 | ELBOW DUCT BURNER A | |
| G | 43-7587-5-6109 | FLUE GAS P & ID | |
| F | 43-7587-5-6110 | FUEL FEED (FRONT WALL) P & ID | |
| F | 43-7587-5-6111 | FUEL FEED (FRONT WALL) P & ID | |
| F | 43-7587-5-6112 | FUEL FEED (REAR WALL) P & ID | |
| F | 43-7587-5-6113 | LIMESTONE SYSTEM P & ID | |
| F | 43-7587-5-6114 | LIMESTONE SYSTEM P & ID | |
| F | 43-7587-5-6115 | LIMESTONE SYSTEM P & ID | |
| F | 43-7587-5-6116 | SIDEWALL STRIPPER/COOLER D P & ID | |
| F | 43-7587-5-6117 | FRONTWALL STRIPPER/COOLER C P & ID | |
| E | 43-7587-5-6118 | AMMONIA SYSTEM P & ID | |
| F | 43-7587-5-6119 | AMMONIA SYSTEM P & ID | |
| F | 43-7587-5-6120 | SEAL POT BLOWER SYSTEMS P & ID | |
| C | 43-7587-5-6121 | FLUE GAS P & ID | DELETED |
| E | 43-7587-5-6122 | INTREX ISH2 P & ID | |
| D | 43-7587-5-6123 | INTREX FSH P & ID | |
| F | 43-7587-5-6124 | SIDEWALL STRIPPER/COOLER A P & ID | |
| E | 43-7587-5-6125 | FRONTWALL STRIPPER/COOLER B P & ID | |
| E | 43-7587-5-6126 | ELBOW DUCT BURNER B | |
| E | 43-7587-5-6127 | ELBOW DUCT BURNER C | |
| F | 43-7587-5-6128 | CYCLONES P & ID | |
| E | 43-7587-5-6129 | S/C CONDENSATE COOLING WATER P & ID | |
| D | 43-7587-5-6130 | FAN & GEARBOX COOLING WATER P & ID | |
| F | 43-7587-5-6131 | INSTRUMENT AIR SUPPLY P & ID | |
| D | 43-7587-5-6132 | INSTRUMENT AIR SUPPLY P & ID | |
| F | 43-7587-5-6133 | SERVICE AIR SUPPLY P & ID | |
| B | 43-7587-5-6134 | BURNER A | |
| B | 43-7587-5-6135 | BURNER B | |
| B | 43-7587-5-6136 | BURNER C | |
| B | 43-7587-5-6137 | P&ID INTREX ASH SYSTEM | |
| A | 43-7587-5-6138 | P&ID INTREX ASH SYSTEM | |

## NOTES

1. DO NOT SCALE THIS DRAWING. USE FIGURE DIMENSIONS ONLY.
2. ABBREVIATIONS USED ON THIS DRAWING ARE IN ACCORDANCE WITH AMERICAN STANDARD "ABBREVIATIONS FOR USE ON DRAWING".

## REVISIONS

| REV. | DATE | DR. INT. | DESCRIPTION |
|---|---|---|---|
| H | 10/19/01 | RW | REVISED AS NOTED |
| G | 3/9/01 | MT | REVISED AS NOTED |
| F | 10/27/00 | SJM | REVISED AS NOTED |
| E | 7/26/00 | SJM | ADDED DRAWINGS 6134, 6135 AND 6136 TO P &ID INDEX. REVISED DRAWINGS 6108, 6126, 6127, 6131 AND 6133. |
| D | 7/7/00 | MS | ADDED: SYMBOLS, DRAWINGS & TAG REVISED: NOTE 7, TAG & REVISIONS |
| C | 12-16-99 | MS | REVISED: INSTRUMENT TAGGING/GEMS CODE & NOTE 7. DELETED: SYSTEM DESIGNATIONS & NOTE 5. ADDED: REVISION & REMARKS COLUMNS. |
| B | 9-7-99 | MS | GENERAL UPDATING |
| A | 4-14-99 | RK | INITIAL ISSUE |

PROCESS & INSTRUMENTATION DIAGRAM
LEGEND SHEET

JEA JACKSONVILLE, FLORIDA

NORTHSIDE UNITS 1 & 2 REPOWERING PROJECT
Equipment No.: N01- & N02-
B&W Drawing No.: 62.3401.05-C4050

| DRAWING NUMBER | SCALE: NONE=1'-0" | REVISION |
|---|---|---|
| 43-7587-5-6100 | | H |

| | | | |
|---|---|---|---|
| DRAWN BY | RK | 3-29-99 | 200738700 UNIT 2 DOE |
| CHECKED BY | CB | 4-14-99 | 200761000 UNIT 1 JEA |
| APPROVED BY | CB | 4-14-99 | |

THIS DRAWING IS THE PROPERTY OF THE FOSTER WHEELER ENERGY CORPORATION PERRYVILLE, N.J.
This document and any information including the processes contained or represented herein are exclusively the property of Foster Wheeler. Except as specifically authorized in writing by Foster Wheeler, the copying, use, or disclosure of this document and/or the information and processes contained herein is strictly prohibited. Foster Wheeler reserves all rights, whether at law or in equity, in regard to enforcement and damages as a result of and disclaims all responsibility and liability in connection with any unauthorized copying, use or disclosure.
©1995 FOSTER WHEELER All Rights Reserved

CRA33213 11-SEP-2002 15:24:27

## LINE VALVES

| | |
|---|---|
| GATE VALVE, NORMALLY CLOSED | GATE VALVE |
| GLOBE VALVE, NORMALLY CLOSED | GLOBE VALVE |
| BALL VALVE, NORMALLY CLOSED | BALL VALVE |
| NEEDLE VALVE | PLUG VALVE |
| KNIFE GATE/SLIDE GATE VALVE | DIAPHRAGM VALVE |
| IN-LINE SAFETY VALVE | SAFETY OR RELIEF VALVE |
| ANGLE VALVE | THREE-WAY VALVE |
| FOUR-WAY VALVE | BUTTERFLY VALVE |
| CHECK VALVE | STOP CHECK VALVE |
| EXCESS FLOW CHECK VALVE | |

## EQUIPMENT TAGGING

NO1 BO 03 001

- 001 — SEQUENCE NUMBER
- 03 — MAJOR EQUIPMENT CODE
- BO — EQUIPMENT GROUP/SYSTEM CODE
- NO1 — PLANT & UNIT NUMBER

## VALVE ACTUATORS

| | |
|---|---|
| S — SOLENOID OPERATED | M — MOTOR OPERATED |
| P — PILOT OPERATED | |
| PISTON OPERATED (SINGLE ACTING, SPRING RETURN) | PISTON OPERATED (DOUBLE ACTING) |
| PISTON OPERATED WITH POSITIONER | DIAPHRAGM OPERATED WITH POSITIONER |
| DIAPHRAGM OPERATED | MANUAL OPERATED |

## LINE SYMBOLS

| | |
|---|---|
| MAIN PROCESS LINE | |
| SECONDARY PROCESS LINE | |

## SELF-ACTUATED DEVICES – PRESSURE

| | |
|---|---|
| SET @ XXX PSIG — BACKPRESSURE REGULATOR, SELF – CONTAINED | SET @ XXX PSIG — PRESSURE – REDUCING REGULATOR, SELF CONTAINED |
| SET @ XXX PSIG — BACKPRESSURE REGULATOR WITH EXTERNAL PRESSURE TAP | SET @ XXX PSIG — PRESSURE – REDUCING REGULATOR WITH EXTERNAL PRESSURE TAP |

## EQUIPMENT

| | | | |
|---|---|---|---|
| CENTRIFUGAL FAN WITH INLET VANES | FAN (BLOWER, EXHAUSTER) | POSITIVE DISPLACEMENT BLOWER OR PUMP | |
| M — MOTOR | MECHANICAL DRIVE (STEAM) | V.S.D. — VARIABLE SPEED DRIVE | |
| SCREEN | FILTER | SILENCER | |
| H / S — COILS H = HEATING COIL, HW = HOT WATER, S = STEAM (SHOWN), E = ELECTRIC, G = GAS | STRAIGHTENING VANES | EXPANSION JOINT | |
| | | FLEX CONNECTOR | |
| PARALLEL BLADE DAMPER | BACKDRAFT DAMPER | OPPOSED BLADE DAMPER | |
| AIR CANNON | ROTARY VALVE | | |
| ROTARY SOOTBLOWER | HALF RETRACTABLE SOOTBLOWER | FULL RETRACTABLE SOOTBLOWER | |
| 2/3 RETRACTABLE SOOTBLOWER | SILENCER — STEAM SILENCER | DESUPERHEATER SPRAY | |

## PROCESS PIPING ACCESSORIES

| | | |
|---|---|---|
| CONDUCTIVITY COLUMN WITH PROBES | TIE BAR | CONDENSATE POT |
| TRAP | FLEXIBLE HOSE | PURGE AIR REQUIRED FOR INSTRUMENT |
| STRAINER, Y-TYPE | ISOLATING DAMPER | |
| BLIND FLANGE | HEAD CHAMBER | |
| FLANGE JOINT | SEPARATION CHAMBER | |
| SCREWED CAP | FLOOR DRAIN | |
| WELDED CAP | RUPTURE DISK | |
| QUICK DISCONNECT HOSE CONNECTOR | EXPANSION LOOP | |

## NOTES

1. DO NOT SCALE THIS DRAWING. USE FIGURE DIMENSIONS ONLY.
2. ABBREVIATIONS USED ON THIS DRAWING ARE IN ACCORDANCE WITH AMERICAN STANDARD "ABBREVIATIONS FOR USE ON DRAWING".

| REV | DATE | BY | DESCRIPTION |
|---|---|---|---|
| D | 7-7-00 | MS | REVISED DESCRIPTION |
| C | 12-16-99 | MS | REVISED LINE TITLE, VALVE TAGGING/GEMS CODE AND RELIEF VALVES. |
| B | 9-7-99 | MS | REVISED PROCESS LINES |
| A | 4-14-99 | RK | INITIAL ISSUE |

REVISIONS

# PROCESS & INSTRUMENT DIAGRAM LEGEND SHEET

JEA — NORTHSIDE UNITS 1 & 2 REPOWERING PROJECT

Equipment No: N01– & N02–

FWNC Drawing No: 43-7587-5-6101

| DRAWING NUMBER | SCALE | REVISION |
|---|---|---|
| 43-7587-5-6101 | NONE-1-0" | D |

| | | | |
|---|---|---|---|
| DRAWN BY | RK | 3-29-99 | 200T58700 UNIT 2 DGE |
| CHECKED BY | CB | 4-14-99 | 200T61030 UNIT 1 JEA |
| APPROVED BY | CH | 4-14-99 | |

THIS DRAWING IS THE PROPERTY OF THE FOSTER WHEELER ENERGY CORPORATION

P062713.62.3401.05-C4005 St:RD 11/17/01 MM-02280

CRA33213 11-SEP-2002 15:23:47

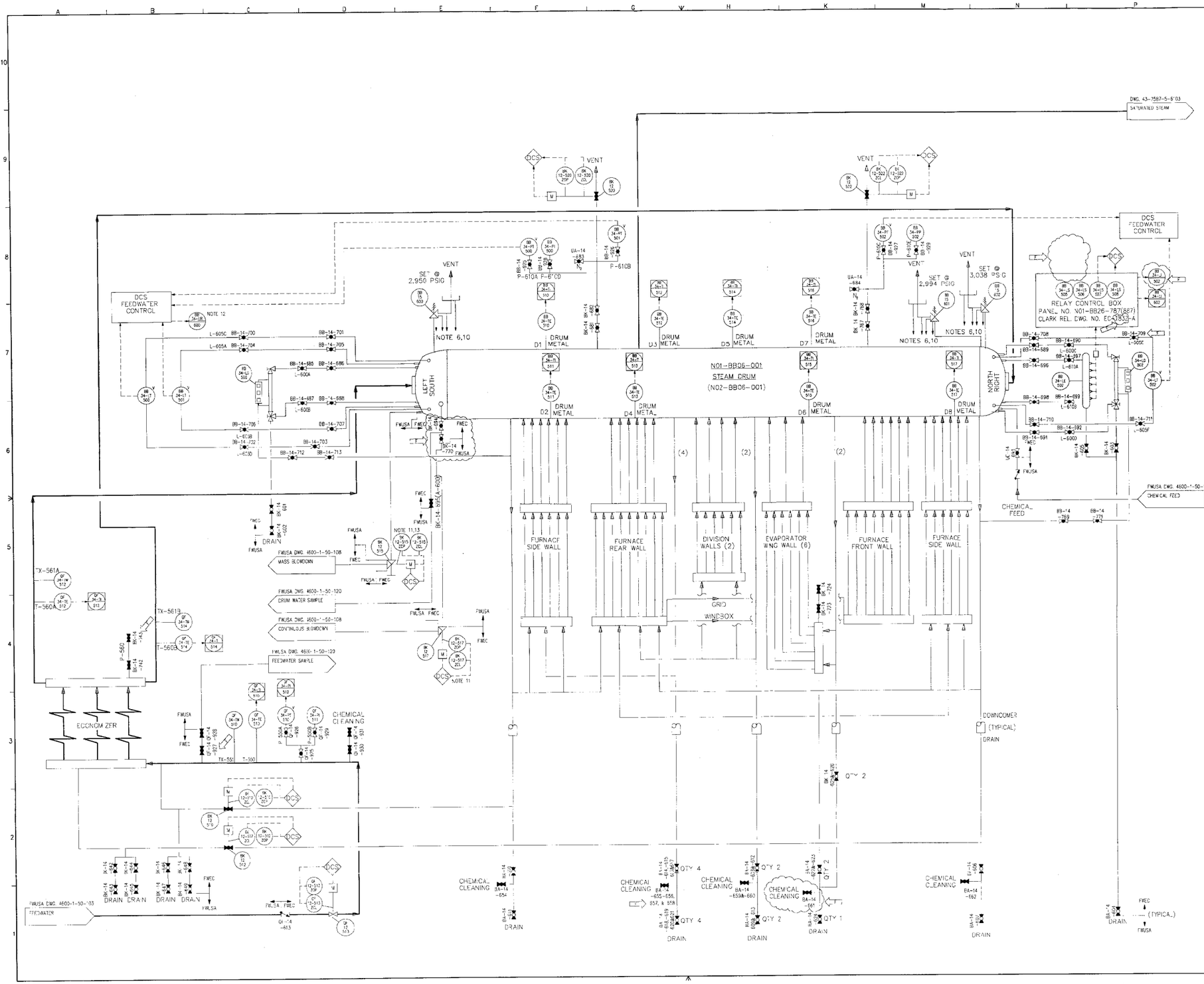


NOTES

1. DO NOT SCALE THIS DRAWING. USE FIGURE DIMENSIONS ONLY.
2. ABBREVIATIONS USED ON THIS DRAWING ARE IN ACCORDANCE WITH AMERICAN STANDARD "ABBREVATIONS FOR USE ON DRAWING".
3. ALL INSTRUMENTATION BY FWEC, UNLESS OTHERWISE DESIGNATED BY "/".
4. FOR SYMBOLS AND LEGEND SEE DRAWINGS No. 43-7587-5-6100 AND -6101.
5. DISTRIBUTED CONTROL SYSTEM (DCS) FUNCTIONS ARE FURNISHED BY JEA.
6. SAFETY VALVES REQUIRE FOUR DRAIN CONNECTIONS (UPPER AND LOWER BODY, ELBOW AND DRIP PAN). THESE FOUR DRAINS ARE TO BE ROUTED SEPARATELY TO OPEN FLOOR DRAINS. DO NOT CONNECT THESE DRAINS TO A PRESSURIZED TANK.
7. MOTOR OPERATED VALVES HAVE DCS BASED OPEN AND CLOSE COMMAND SIGNALS TAGGED AS FOLLOWS:
   OPEN NOX-XX12-XXXCOP
   CLOSE NOX-XX12-XXXCCL
8. ALL PRESSURE PART THERMOWELLS ARE 1½" UNLESS OTHERWISE NOTED.
9. ALL PRESSURE PART LEVEL, PRESSURE AND SAMPLE CONNECTIONS ARE 1" UNLESS OTHERWISE NOTED. WATER GAUGE CONNECTIONS ARE 1½". FEEDWATER SAMPLE CONNECTION IS ¾".
10. ALL SAFETY VALVE EXHAUST PIPING TERMINATES TWO (2) METERS ABOVE BOILER ROOF.
11. MASS BLOWDOWN END VALVE AND CONTINUOUS BLOWDOWN END VALVE TO BE LOCATED AS CLOSE AS POSSIBLE TO BLOWDOWN TANK.
12. ANALOG OUTPUT TO MAIN CONTROL ROOM RECORDER IS REQUIRED. OUTPUT AND RECORDERS ARE NOT BY FW.
13. THIS VALVE IS A TANDEM VALVE

| REV | DATE | BY | DESCRIPTION |
|---|---|---|---|
| F | 10/9/01 | RN | REVISED TAG NUMBERS, PIPE VALVE LINE AND CLARK BELLANCE DRAWING NUMBER |
| E | 10-27-00 | MS | REVISED AS NOTED |
| D | 7-7-00 | SM | ADDED: VENT, DRAIN, CHEMICAL CLEANUP, INSTRUMENT ROOT VALVES, DRUM LEVEL RECORDER & INDICATOR TAG NUMBERS. |
| C | 12-16-99 | MS | ADDED: SCOPE BREAK, ALL TAG NUMBERS, SAFETY VALVE DETAILS, DCS SYMBOLS & NOTES 5,7,8 & 9. DELETED: SAFETY VALVE REVISED: ALL TAG NUMBERS & NOTE 3 MODIFIED: SAMPLE CONNECTIONS, FEEDWATER VALVE & DRAIN VALVES. |
| B | 9-7-99 | RK | ADDED (2) SVS, (1) VENT MV, TIED DRUM END PTS, PTS TO VENT MV CONNECTION, (2) DRUM METAL TE'S, (2) DRAIN MV'S, INSTRUMENT CONN. NUMBERS, FW, BW SAMPLE AE'S, ECONOMIZER RECIRC LINES, NOTE 7, MODIFIED NOTE 3, DELETED FW CONTROL, ADDED FWUSA WREFS,DRUM LEFT & RIGHT TIED DOWNCOMERS TOGETHER, CONNECTED LG'S (BOTH SIDES) DIRECTLY TO DRUM, DELETED LEFT SIDE LE & RELAY CTRL BOX, RELOCATED SURFACE BLOWDOWN MOV TO LH SIDE & RENAMED IT MASS BLOWDOWN, RH SIDE PT WAS PH, COMBINED FW SAMPLE & CHEM CLEAN TO SINGLE TAP. DELETED NOTE 5. |
| A | 4-14-99 | RK | INITIAL ISSUE |

REVISIONS

# PROCESS & INSTRUMENTATION DIAGRAM WATER SIDE

JEA

NORTHSIDE UNITS 1 & 2 REPOWERING PROJECT
Equipment No.: N01-BB & N02-BB
RAW Drawing No.: A3 7587 05-0100W

| DRAWING NUMBER | SCALE | REVISION |
|---|---|---|
| 43-7587-5-6102 | NONE | F |

| | | | |
|---|---|---|---|
| DRAWN BY | RK | 3-29-99 | 230/7587CO UNIT 2 DOE |
| CHECKED BY | CB | 4-14-99 | 230/61CO UNIT 1 JEA |
| APPROVED BY | CB | 4-14-99 | |

FW

THIS DRAWING IS THE PROPERTY OF THE FOSTER WHEELER ENERGY CORPORATION PERRYVILLE, N.J.
This document and any information contained therein are neither to be reproduced nor disclosed to others without the express written consent of Foster Wheeler Energy Corporation. Any information contained herein is strictly prohibited. Foster Wheeler makes no representations or warranties, express or implied, with respect to the accuracy or completeness of the information contained herein, or shall not be liable in regard to enforcement thereunder. Foster Wheeler Energy Corporation. The reader is cautioned and not to rely on information contained herein.
© Copyright 1999 Foster Wheeler Corporation
All Rights Reserved

P062713.62.3401.05-C4006 St:RD 11/17/01 MM-02280

CRA33213 11-SEP-2002 15:22:59

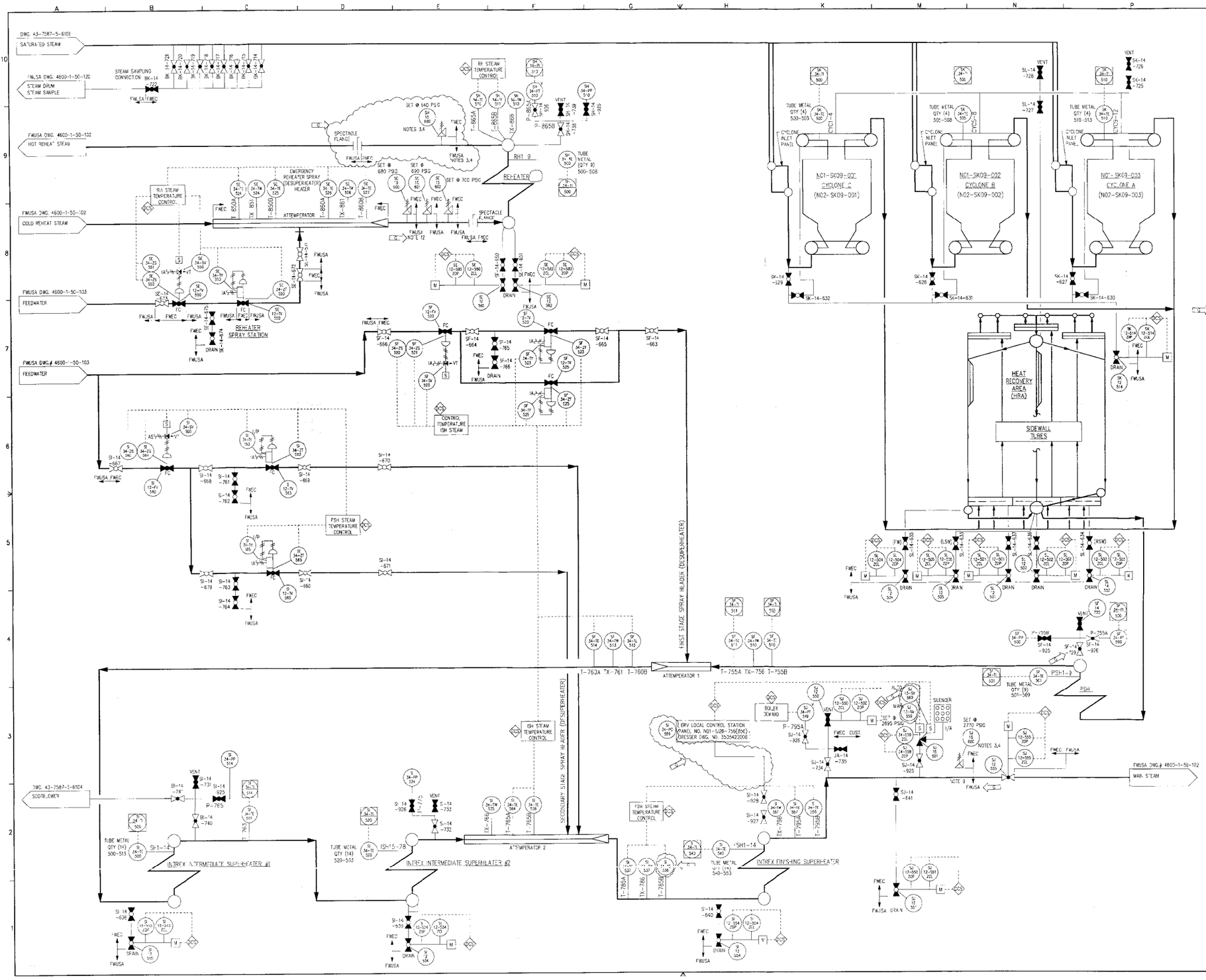


NOTES

1. DO NOT SCALE THIS DRAWING. USE FIGURE DIMENSIONS ONLY.
2. ABBREVIATIONS USED ON THIS DRAWING ARE IN ACCORDANCE WITH AMERICAN STANDARD "ABBREVIATIONS FOR USE ON DRAWING".
3. ALL SAFETY VALVE EXHAUST PIPING TERMINATES TWO (2) METERS ABOVE BOILER ROOF.
4. ALL INSTRUMENTATION BY FWEC, UNLESS OTHERWISE DESIGNATED BY "V".
5. DISTRIBUTED CONTROL SYSTEM (DCS) FUNCTIONS ARE FURNISHED BY JEA.
6. FOR SYMBOLS AND LEGEND SEE DRAWINGS No. 43-7587-5-6100 AND -6101.
7. MOTOR OPERATED VALVES HAVE DCS BASED OPEN AND CLOSE COMMAND SIGNALS TAGGED AS FOLLOWS:
   OPEN: N0X-XX-2-XXXCOP
   CLOSE: N0X-XX-2-XXXCCL
8. DISTRIBUTED CONTROL SYSTEM (DCS) FUNCTIONS ARE FURNISHED BY JEA.
9. SAFETY VALVES REQUIRE FOUR DRAIN CONNECTIONS (UPPER AND LOWER BODY, ELBOW AND DRIP PAN). THESE FOUR DRAINS ARE TO BE ROUTED SEPARATELY TO OPEN FLOOR DRAINS. DO NOT CONNECT THESE DRAINS TO A PRESSURIZED TANK.
10. ALL PRESSURE PART THERMOWELLS ARE 1½" UNLESS OTHERWISE NOTED.
11. ALL PRESSURE PART LEVEL PRESSURE AND SAMPLE CONNECTIONS ARE 1" UNLESS OTHERWISE NOTED. WATER GAUGE CONNECTIONS ARE 1½". FEEDWATER SAMPLE CONNECTION IS ¾".
12. DRAIN PIPING BY FWUSA.

| REV | DATE | BY | DESCRIPTION |
|---|---|---|---|
| G | 10/19/01 | DN | ADDED NOTE 12. REVISED VALVE TAG NUMBERS AND MOVED REHEAT OUTLET SAFETY VALVE. |
| F | 3/9/01 | DH | REVISED AS NOTED |
| E | 10/27/00 | SJM | REVISED AS NOTED |
| D | 7/7/00 | SJM | ADDED VENT, DRAIN, STEAM SAMPLING, ISOLATION, BLOCK & BLEED, STOP & NO PURGE MANUAL VALVES AND VENT, ROOT VALVES. ADDED VALVE TAG NUMBERS. |
| C | 12/16/99 | MS | DELETED: SOLENOID OPER VENT, VALVE SWITCHES, MAIN STEAM VALVE BYPASS & DRAIN & FSH VENT. MODIFIED: STEAM SAMPLE CONN. & FSH & SH TEMP. CONTROLS & ERV & 2" CONNECTIONS & MANUAL VALVES. RELOCATED: SOOTBLOWER STEAM CONNECTION. REVISED: NOTE 4. ADDED: ALL TAG NUMBERS & MOTORIZED DRAIN & VENT VALVES, SAFETY VALVES & NOTES 7,8,9,10 & 11. |
| B | 9/7/99 | RK | ADDED: SCOPE BREAKS, FWUSA XREFS, NOTE 5 XREFS, FEEDWATER IN XREFS WERE SPRAY WATER. REARRANGED FW TVS PIPING ARRGT. ADDED TE QUANTITIES & TUBE METAL TAG INSTRUMENT CONNECTION NUMBERS. COMBINED PT & VENT CONNECTIONS @ REHEATER. RELOCATED TE, TW CONNECTIONS @ INTREXES. MODIFIED NOTE 3 & 4. REVISED TEMP. CONTROL ON COLD REHEAT. REVISED NOTE 6 AND DELETED NOTE 7. |
| A | 4-14-99 | RK | INITIAL ISSUE |

REVISIONS

PROCESS & INSTRUMENTATION DIAGRAM
STEAM AND WATER FLOW

JEA
NORTH-SIDE UNTS 1 & 2 REPOWERING PROJECT
Equipment No.: N01-SF & N02-SF
BOOK DRAWING NO.: 02-2401-01-C4007

| DRAWING NUMBER | SCALE: NONE | REVISION |
|---|---|---|
| 43-7587-5-6103 | | G |

| | | | |
|---|---|---|---|
| DRAWN BY | RK | 3-30-99 | 20C7587D3 UNIT 2 DCE |
| CHECKED BY | CB | 4 14 99 | 20C61C0D UNIT 1 JEA |
| APPROVED BY | CB | 4 14 99 | |

THIS DRAWING IS THE PROPERTY OF THE
FOSTER WHEELER ENERGY CORPORATION
PERRYVILLE, N.J.

This document and any information, including the processes contained in, represents the property of Foster Wheeler Energy Corporation. It is furnished for the use of the addressee only and is not to be reproduced, transmitted, disclosed or used for any purpose other than that for which it is furnished without the prior written consent of Foster Wheeler Energy Corporation. Foster Wheeler Energy Corporation makes no representation or warranty, express or implied, with respect to any patent, copyright, trade secret or other intellectual property rights, whether or not such rights are related to information or processes contained in this document. Foster Wheeler Energy Corporation shall not be liable for any consequential damages resulting from use of this document.
©1999 FOSTER WHEELER
All Rights Reserved

P062713.62.3401.05-C4007 St:RD 11/17/01 MM-02280

CRA33213 11-SEP-2002 15:22:07

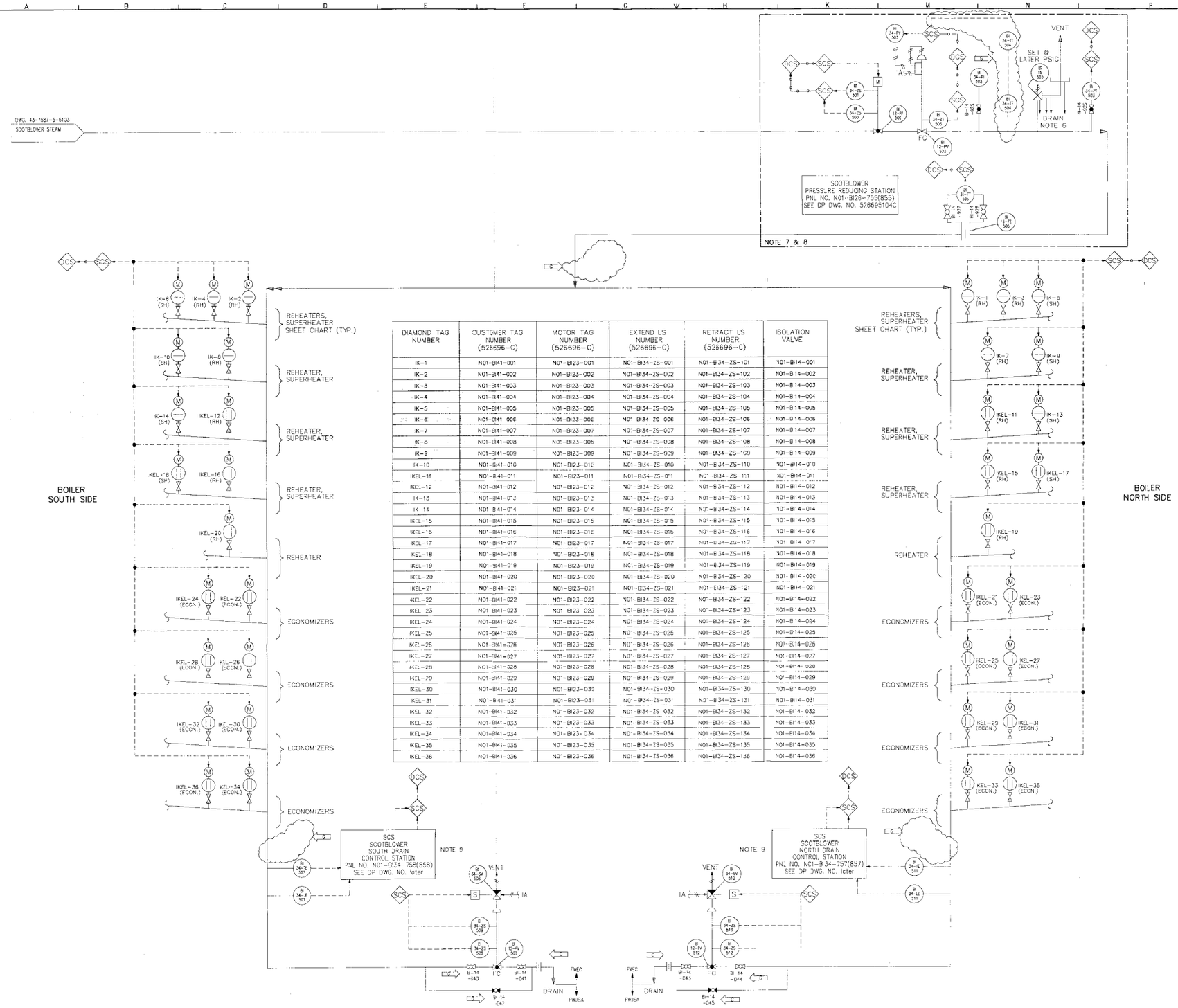


| DIAMOND TAG NUMBER | CUSTOMER TAG NUMBER (526696-C) | MOTOR TAG NUMBER (526696-C) | EXTEND LS NUMBER (526696-C) | RETRACT LS NUMBER (526696-C) | ISOLATION VALVE |
|---|---|---|---|---|---|
| IK-1 | N01-BI41-001 | N01-BI23-001 | N01-BI34-ZS-001 | N01-BI34-ZS-101 | N01-BI14-001 |
| IK-2 | N01-BI41-002 | N01-BI23-002 | N01-BI34-ZS-002 | N01-BI34-ZS-102 | N01-BI14-002 |
| IK-3 | N01-BI41-003 | N01-BI23-003 | N01-BI34-ZS-003 | N01-BI34-ZS-103 | N01-BI14-003 |
| IK-4 | N01-BI41-004 | N01-BI23-004 | N01-BI34-ZS-004 | N01-BI34-ZS-104 | N01-BI14-004 |
| IK-5 | N01-BI41-005 | N01-BI23-005 | N01-BI34-ZS-005 | N01-BI34-ZS-105 | N01-BI14-005 |
| IK-6 | N01-BI41-006 | N01-BI23-006 | N01-BI34-ZS-006 | N01-BI34-ZS-106 | N01-BI14-006 |
| IK-7 | N01-BI41-007 | N01-BI23-007 | N01-BI34-ZS-007 | N01-BI34-ZS-107 | N01-BI14-007 |
| IK-8 | N01-BI41-008 | N01-BI23-008 | N01-BI34-ZS-008 | N01-BI34-ZS-108 | N01-BI14-008 |
| IK-9 | N01-BI41-009 | N01-BI23-009 | N01-BI34-ZS-009 | N01-BI34-ZS-109 | N01-BI14-009 |
| IK-10 | N01-BI41-010 | N01-BI23-010 | N01-BI34-ZS-010 | N01-BI34-ZS-110 | N01-BI14-010 |
| IKEL-11 | N01-BI41-011 | N01-BI23-011 | N01-BI34-ZS-011 | N01-BI34-ZS-111 | N01-BI14-011 |
| IKEL-12 | N01-BI41-012 | N01-BI23-012 | N01-BI34-ZS-012 | N01-BI34-ZS-112 | N01-BI14-012 |
| IK-13 | N01-BI41-013 | N01-BI23-013 | N01-BI34-ZS-013 | N01-BI34-ZS-113 | N01-BI14-013 |
| IK-14 | N01-BI41-014 | N01-BI23-014 | N01-BI34-ZS-014 | N01-BI34-ZS-114 | N01-BI14-014 |
| IKEL-15 | N01-BI41-015 | N01-BI23-015 | N01-BI34-ZS-015 | N01-BI34-ZS-115 | N01-BI14-015 |
| IKEL-16 | N01-BI41-016 | N01-BI23-016 | N01-BI34-ZS-016 | N01-BI34-ZS-116 | N01-BI14-016 |
| IKEL-17 | N01-BI41-017 | N01-BI23-017 | N01-BI34-ZS-017 | N01-BI34-ZS-117 | N01-BI14-017 |
| IKEL-18 | N01-BI41-018 | N01-BI23-018 | N01-BI34-ZS-018 | N01-BI34-ZS-118 | N01-BI14-018 |
| IKEL-19 | N01-BI41-019 | N01-BI23-019 | N01-BI34-ZS-019 | N01-BI34-ZS-119 | N01-BI14-019 |
| IKEL-20 | N01-BI41-020 | N01-BI23-020 | N01-BI34-ZS-020 | N01-BI34-ZS-120 | N01-BI14-020 |
| IKEL-21 | N01-BI41-021 | N01-BI23-021 | N01-BI34-ZS-021 | N01-BI34-ZS-121 | N01-BI14-021 |
| IKEL-22 | N01-BI41-022 | N01-BI23-022 | N01-BI34-ZS-022 | N01-BI34-ZS-122 | N01-BI14-022 |
| IKEL-23 | N01-BI41-023 | N01-BI23-023 | N01-BI34-ZS-023 | N01-BI34-ZS-123 | N01-BI14-023 |
| IKEL-24 | N01-BI41-024 | N01-BI23-024 | N01-BI34-ZS-024 | N01-BI34-ZS-124 | N01-BI14-024 |
| IKEL-25 | N01-BI41-025 | N01-BI23-025 | N01-BI34-ZS-025 | N01-BI34-ZS-125 | N01-BI14-025 |
| IKEL-26 | N01-BI41-026 | N01-BI23-026 | N01-BI34-ZS-026 | N01-BI34-ZS-126 | N01-BI14-026 |
| IKEL-27 | N01-BI41-027 | N01-BI23-027 | N01-BI34-ZS-027 | N01-BI34-ZS-127 | N01-BI14-027 |
| IKEL-28 | N01-BI41-028 | N01-BI23-028 | N01-BI34-ZS-028 | N01-BI34-ZS-128 | N01-BI14-028 |
| IKEL-29 | N01-BI41-029 | N01-BI23-029 | N01-BI34-ZS-029 | N01-BI34-ZS-129 | N01-BI14-029 |
| IKEL-30 | N01-BI41-030 | N01-BI23-030 | N01-BI34-ZS-030 | N01-BI34-ZS-130 | N01-BI14-030 |
| IKEL-31 | N01-BI41-031 | N01-BI23-031 | N01-BI34-ZS-031 | N01-BI34-ZS-131 | N01-BI14-031 |
| IKEL-32 | N01-BI41-032 | N01-BI23-032 | N01-BI34-ZS-032 | N01-BI34-ZS-132 | N01-BI14-032 |
| IKEL-33 | N01-BI41-033 | N01-BI23-033 | N01-BI34-ZS-033 | N01-BI34-ZS-133 | N01-BI14-033 |
| IKEL-34 | N01-BI41-034 | N01-BI23-034 | N01-BI34-ZS-034 | N01-BI34-ZS-134 | N01-BI14-034 |
| IKEL-35 | N01-BI41-035 | N01-BI23-035 | N01-BI34-ZS-035 | N01-BI34-ZS-135 | N01-BI14-035 |
| IKEL-36 | N01-BI41-036 | N01-BI23-036 | N01-BI34-ZS-036 | N01-BI34-ZS-136 | N01-BI14-036 |

NOTES

1. DO NOT SCALE THIS DRAWING. USE FIGURE DIMENSIONS ONLY.
2. ABBREVIATIONS USED ON THIS DRAWING ARE IN ACCORDANCE WITH AMERICAN STANDARD "ABBREVIATIONS FOR USE ON DRAWING".
3. ALL INSTRUMENTATION BY FWEC, UNLESS OTHERWISE DESIGNATED BY JEA.
4. FOR SYMBOLS AND LEGEND SEE DRAWINGS No. 43-7587-5-6100 AND -6101.
5. SOOTBLOWER SEQUENCE SHALL BE CONTROLLED VIA A MICROPROCESSOR BASED CONTROLLER.
6. SAFETY VALVES REQUIRE FOUR DRAIN CONNECTIONS (BODY, ELBOW AND DRIP PAN). THESE FOUR DRAINS ARE TO BE ROUTED SEPARATELY TO OPEN FLOOR DRAINS. DO NOT CONNECT THESE DRAINS TO A PRESSURIZED TANK.
7. RACK MOUNTED EQUIPMENT.
8. INSTRUMENTATION FURNISHED AS PART OF SOOTBLOWER EQUIPMENT.
9. INSTRUMENTATION FURNISHED AS PART OF SOOTBLOWER CONDENSATE DRAIN SYSTEM.
10. DISTRIBUTED CONTROL SYSTEM (DCS) FUNCTIONS ARE FURNISHED BY JEA.
11. ALL SAFETY VALVE EXHAUST PIPING TERMINATES TWO (2) METERS ABOVE BOILER ROOF.
12. ALL SOOTBLOWER OPERATION TO CEASE ON A MASTER FUEL TRIP. A CONTACT OUTPUT ON MFT RELAY WILL BE USED.
13. REFER TO DIAMOND POWER LOGIC DIAGRAMS FOR DETAILS OF CONTROL SYSTEM.

| REV. | DATE | BY | DESCRIPTION |
|---|---|---|---|
| G | 10/19/01 | RS | ADDED THERMOCOUPLE ON SKID. DELETED CONNECTIONS. |
| F | 10-27-01 | MS | REVISED AS NOTED. |
| E | 7-7-00 | MF | ADDED VALVE TAG NUMBERS. |
| D | 6/28/00 | SJM | REVISED AND REDRAWN. |
| C | 12/15/99 | SJM | ADDED: TAG ALL TAG NUMBERS. DELETED: VALVE SWITCHES |
| B | 9-7-99 | RK | ADDED PRIMARY SH SOOTBLOWER. REHEATER SOOTBLOWER WAS FULL RETRACTABLE. CORRECTED NOTES 7, 8 & 9 & REFS. ON DWG. MODIFIED NOTE 3. REVISED CONDENSATE DRAIN SYSTEM. |
| A | 4-14-99 | RK | INITIAL ISSUE |

REVISIONS

PROCESS & INSTRUMENTATION DIAGRAM
SOOTBLOWER SYSTEM

JEA
NORTHSIDE UNITS 1 & 2 REPOWERING PROJECT
Equipment No.: N01-BI & N02-B
Black Point Power, Inc. Jacksonville, Florida
Great Lakes Power, Inc. Jacksonville, Florida

| DRAWING NUMBER | SCALE | REVISION |
|---|---|---|
| 43-7587-5-6104 | NONE | G |

| | | | |
|---|---|---|---|
| DRAWN BY | RK | 3-30-99 | 200758700 UNIT 2 DOE |
| CHECKED BY | CB | 4-14-99 | 200761000 UNIT 1 JEA |
| APPROVED BY | CB | 4-14-99 | |

THIS DRAWING IS THE PROPERTY OF THE FOSTER WHEELER ENERGY CORPORATION PERRYVILLE, N.J.

© Copyright 1999 Foster Wheeler Corporation

CRA33213 11-SEP-2002 15:21:29

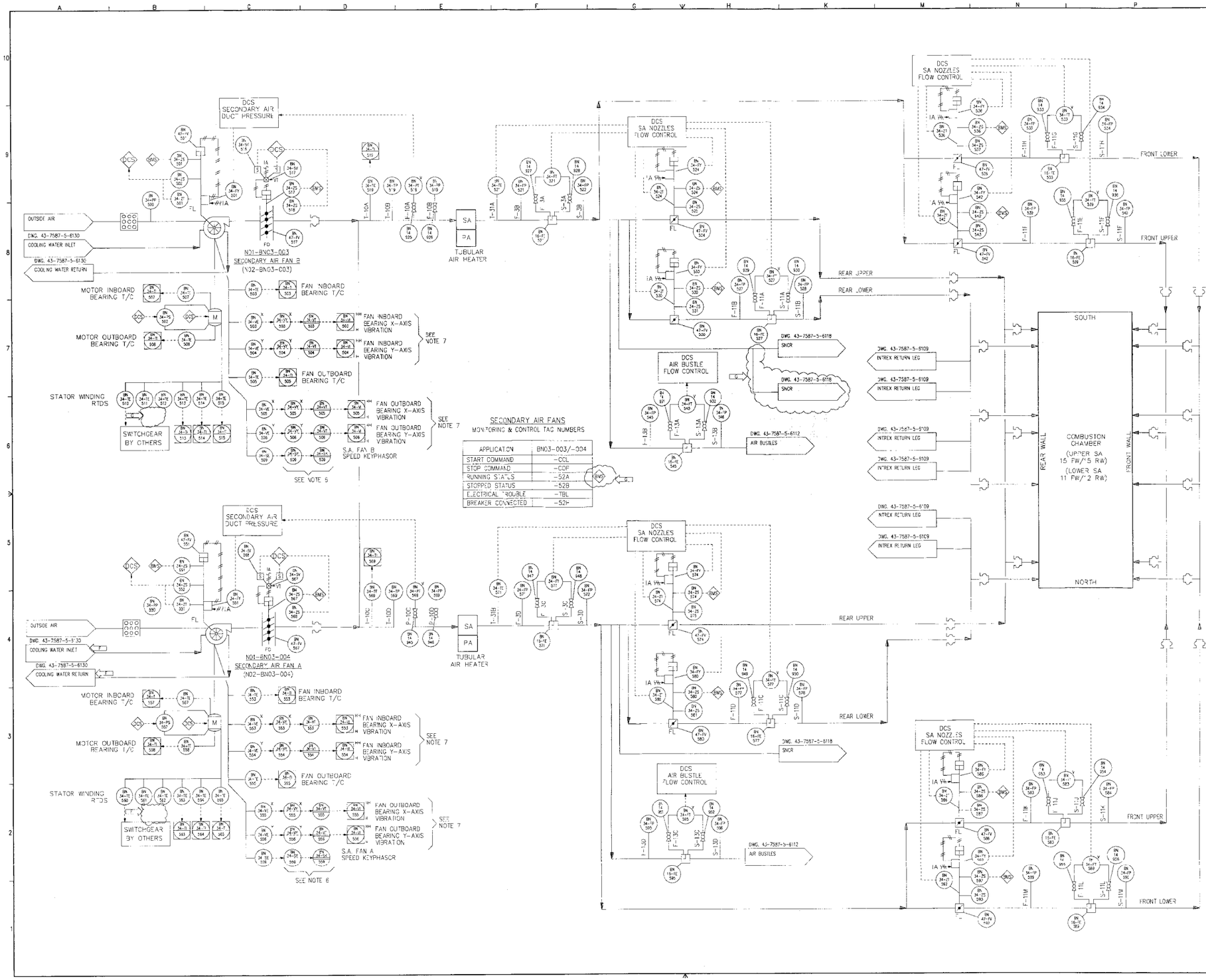


## SECONDARY AIR FANS

MONITORING & CONTROL TAG NUMBERS

| APPLICATION | BN03-003/-004 |
|---|---|
| START COMMAND | -CCL |
| STOP COMMAND | -COF |
| RUNNING STATUS | -52A |
| STOPPED STATUS | -52B |
| ELECTRICAL TROUBLE | -TBL |
| BREAKER CONNECTED | -52P |

## NOTES

1. DO NOT SCALE THIS DRAWING. USE FIGURE DIMENSIONS ONLY.
2. ABBREVIATIONS USED ON THIS DRAWING ARE IN ACCORDANCE WITH AMERICAN STANDARD "ABBREVIATIONS FOR USE ON DRAWINGS".
3. ALL INSTRUMENTATION BY FWEC, UNLESS OTHERWISE DESIGNATED BY "V".
4. FOR SYMBOLS AND LEGEND SEE DRAWINGS No. 43-7587-5-6100 AND -6101.
5. DISTRIBUTED CONTROL SYSTEM (DCS) FUNCTIONS ARE FURNISHED BY JEA.
6. VIBRATION AND SPEED MONITORING INSTRUMENTS ARE HOUSED AS FOLLOWS:
   - PROXIMETERS (FIELD MOUNTED)
     FAN A BN34-765(865)
     FAN B BN34-766(866)
   - MONITORS (TRANSMITTER/SWITCH IN INDOOR PANEL)
     FAN A / FAN B BN27-769(869)
7. HIGH-HIGH VIBRATION SWITCHES WILL BE WIRED DIRECTLY TO DCS FOR FAN TRIP FUNCTION.

| REV. | DATE | BY | DESCRIPTION |
|---|---|---|---|
| G | 10/19/01 | KB | ADDED THIRD FAN/BOP RUN. FOR SNCR. REVISED WIRING OF RTD'S TO SWITCHGEAR. |
| F | 10/27/00 | S.K | REVISED AS NOTED |
| E | 7/7/00 | S.K | ADDED: SNCR INTERFACE. |
| D | 6/28/00 | S.M | MODIFIED SECONDARY AIR FAN BEARING VIBRATION MONITORING EQUIPMENT. ADDED FAN SPEED DETECTION & MONITORING EQUIPMENT. ADDED INSTRUMENT ROOT VALVES. |
| C | 12/6/99 | MS | DELETED: VIBRATION DTT FROM MOTORS. REARRANGED: DAMPERS & PITOT TUBES & PRESS. & TEMP. TRANSMITTERS. ADDED: FY TO DAMPERS, NOTES, AL. TAG NUMBERS & TABLE. REVISED: NOTE 3. |
| B | 5-7-99 | RK | ADDED (2) DCS SA NOZZLES FLOW CONTROL STATIONS, INTREX RETURNS & CROSSOVER. DAMPER FAIL MODES. DCS CONTROL. @ FAN M'R., COMB. CHAMBER NOZZLE QUANTITIES. RP & INSTRUMENT CONN. NUMBERS. DELETED "P" & PIPE CONNECTIONS. RELOCATED PT.S & AIR BUSTLE FLOW CTRL. MODIFIED NOTE 3. |
| A | 4-14-99 | RK | INITIAL ISSUE. |

REVISIONS

# PROCESS & INSTRUMENTATION DIAGRAM SECONDARY AIR

NORTHSIDE UNITS 1 & 2 REPOWERING PROJECT

JEA JACKSONVILLE, FLORIDA

DWG. DRAWING No. 62.340.05-C4009

| DRAWING NUMBER | SCALE | REVISION |
|---|---|---|
| 43-7587-5-6105 | NONE | G |

| | | | |
|---|---|---|---|
| DRAWN BY | RK | 3-30-99 | 203758/00 UNIT 2 DOE |
| CHECKED BY | CB | 4-14-99 | 203761/00 UNIT 1 JEA |
| APPROVED BY | CB | 4-14-99 | |

THIS DRAWING IS THE PROPERTY OF THE FOSTER WHEELER ENERGY CORPORATION PERRYVILLE, N.J.

P062713.62.3401.05-C4009 St:RD 11/17/01 MM-02280

CRA33213 11-SEP-2002 15:20:48

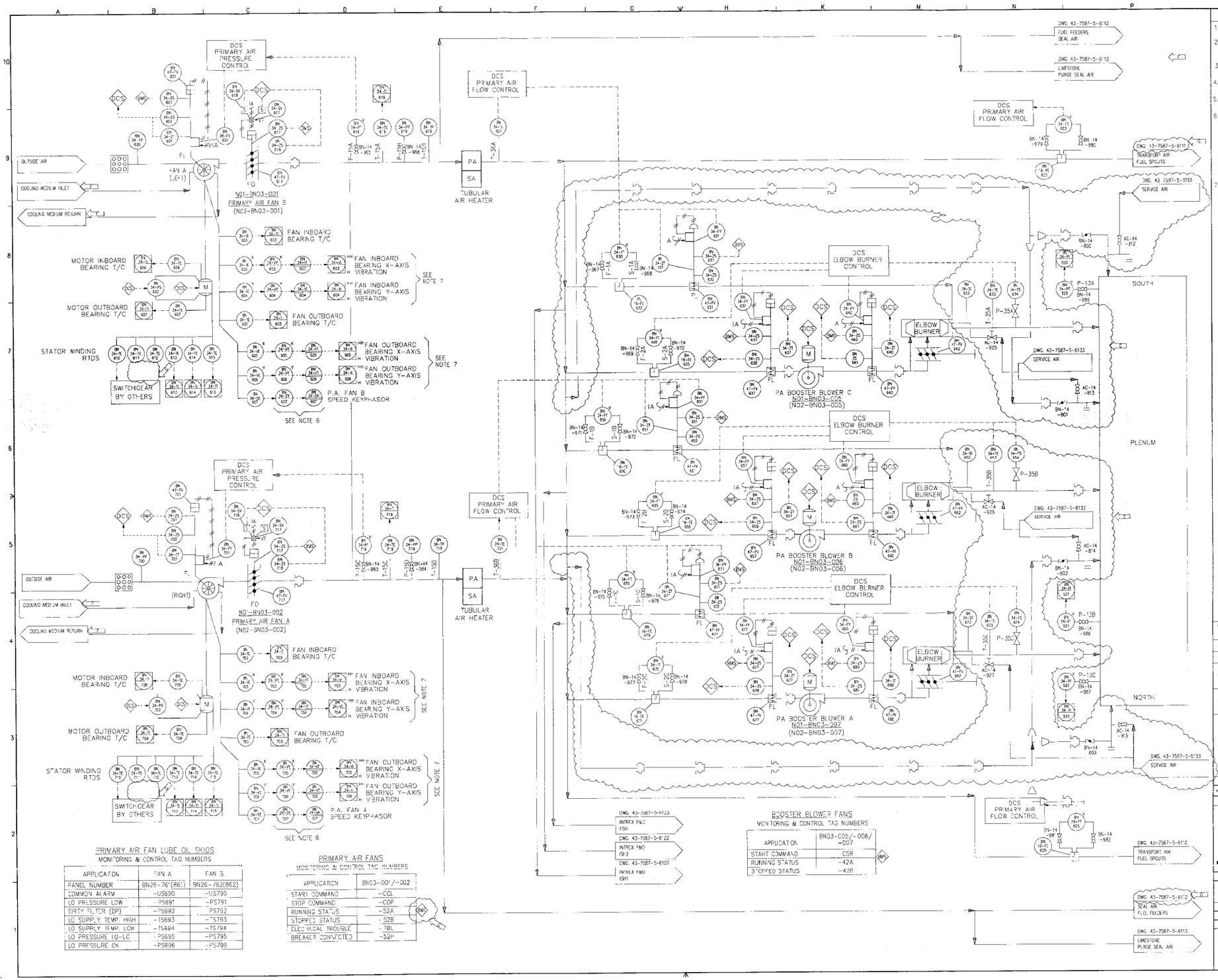


PRIMARY AIR FAN LUBE OIL SKIDS
MONITORING & CONTROL TAG NUMBERS

| APPLICATION | FAN A | FAN B |
|---|---|---|
| PANEL NUMBER | BN26-76'(861) | BN26-762(862) |
| COMMON ALARM | -US690 | -US790 |
| LO PRESSURE LOW | -PS691 | -PS791 |
| DIRTY FILTER (DP) | -PS692 | PS792 |
| LO SUPPLY TEMP. HIGH | -TS693 | -TS793 |
| LO SUPPLY TEMP. LOW | -TS694 | -TS794 |
| LO PRESSURE LO-LO | -PS695 | -PS795 |
| LO PRESSURE OK | -PS696 | -PS796 |

PRIMARY AIR FANS
MONITORING & CONTROL TAG NUMBERS

| APPLICATION | BN03-001/-002 |
|---|---|
| START COMMAND | -CCL |
| STOP COMMAND | -COP |
| RUNNING STATUS | -52A |
| STOPPED STATUS | -52B |
| ELECTRICAL TROUBLE | -TBL |
| BREAKER CONNECTED | -52H |

BOOSTER BLOWER FANS
MONITORING & CONTROL TAG NUMBERS

| APPLICATION | BN03-005/-006/-007 |
|---|---|
| START COMMAND | -CSR |
| RUNNING STATUS | -42A |
| STOPPED STATUS | -42B |

NOTES

1. DO NOT SCALE THIS DRAWING. USE FIGURE DIMENSIONS ONLY.
2. ABBREVIATIONS USED ON THIS DRAWING ARE IN ACCORDANCE WITH AMERICAN STANDARD "ABBREVIATIONS FOR USE ON DRAWING".
3. ALL INSTRUMENTATION BY FWEC, UNLESS OTHERWISE DESIGNATED BY "V".
4. FOR SYMBOLS AND LEGEND SEE DRAWINGS No. 43-7587-5-6100 AND -6101.
5. DISTRIBUTED CONTROL SYSTEM (DCS) FUNCTIONS ARE FURNISHED BY JEA.
6. VIBRATION AND SPEED MONITORING INSTRUMENTS ARE HOUSED AS FOLLOWS:
   - PROXIMETERS (FIELD MOUNTED)
     FAN A - BN26-763(863)
     FAN B - BN26-764(864)
   - MONITORS (TRANSMITTER/SWITCH IN INDOOR PANEL)
     FAN A, FAN B > BN27-769(869)
7. HIGH-HIGH VIBRATION SWITCHES WILL BE WIRED DIRECTLY TO DCS FOR FAN TRIP FUNCTION.

| REV | DATE | BY | DESCRIPTION |
|---|---|---|---|
| G | 10/19/01 | RK | ADDED PA ASSIST TO S/C ENTRANCES. REVISED WIRING OF RTDS TO SWITCHGEAR AND DRAWING DESIGNATIONS. |
| F | 3/9/01 | RK | REVISED AS NOTED |
| E | 12/27/00 | SM | REVISED AS NOTED |
| D | 7-7-00 | SM | MODIFIED PRIMARY FAN BEARING VIBRATION MONITORING EQUIPMENT. ADDED FAN SPEED DETECTION & MONITORING DEVICES. ADDED INSTRUMENT ROOT VALVES. |
| C | 12/16/99 | SM | ADDED: FY TO DAMPERS, NOTES, ALL TAG NUMBERS & TABLES. REVISED: MANUAL VALVES & NOTE 3. RELOCATED BOOSTER BLOWER SUPPLY LINE. |
| B | 9-7-99 | RK | ADDED FLEX CONNTAGS, DCS CTRL @ FAN, MTR OUT. DMPR. FAIL MODE, TE TO BMS @ BURNER OUTLET, CROSSOVER & EXP. JOINTS. DELETED: MOTOR BRG. VIBR. DET. SYSTEM, FE, TE TO FLEX. FED. BURNER OUTLET BRANCHES TO PLENUM, FAN BRG. VTS WERE CTRL ROOM SYMBOL. BOOSTER FAN DMPRS. WERE KNIFE GATE VALVES. RELOCATED COLD AIR TAKE-OFF & EXP. JOINTS. REVISED NOTE 3. |
| A | 4-14-99 | RK | INITIAL ISSUE |

REVISIONS

# PROCESS & INSTRUMENTATION DIAGRAM PRIMARY AIR

JEA JACKSONVILLE, FLORIDA

NORTHSIDE UNITS 1 & 2 REPOWERING PROJECT
Equipment No.: N01-BN & N02-BN
FWC Drawing No.: B2J401.02-0610

| DRAWING NUMBER | SCALE | REVISION |
|---|---|---|
| 43-7587-5-6106 | NONE | G |

| | | | |
|---|---|---|---|
| DRAWN BY | RK | 3-30-99 | 203758700 UNIT 2 DOE |
| CHECKED BY | CB | 4-14-99 | 203761000 UNIT 1 JEA |
| APPROVED BY | CB | 4-14-99 | |

THIS DRAWING IS THE PROPERTY OF THE FOSTER WHEELER ENERGY CORPORATION, CLINTON, N.J.

CRA33213 11-SEP-2002 15:19:29

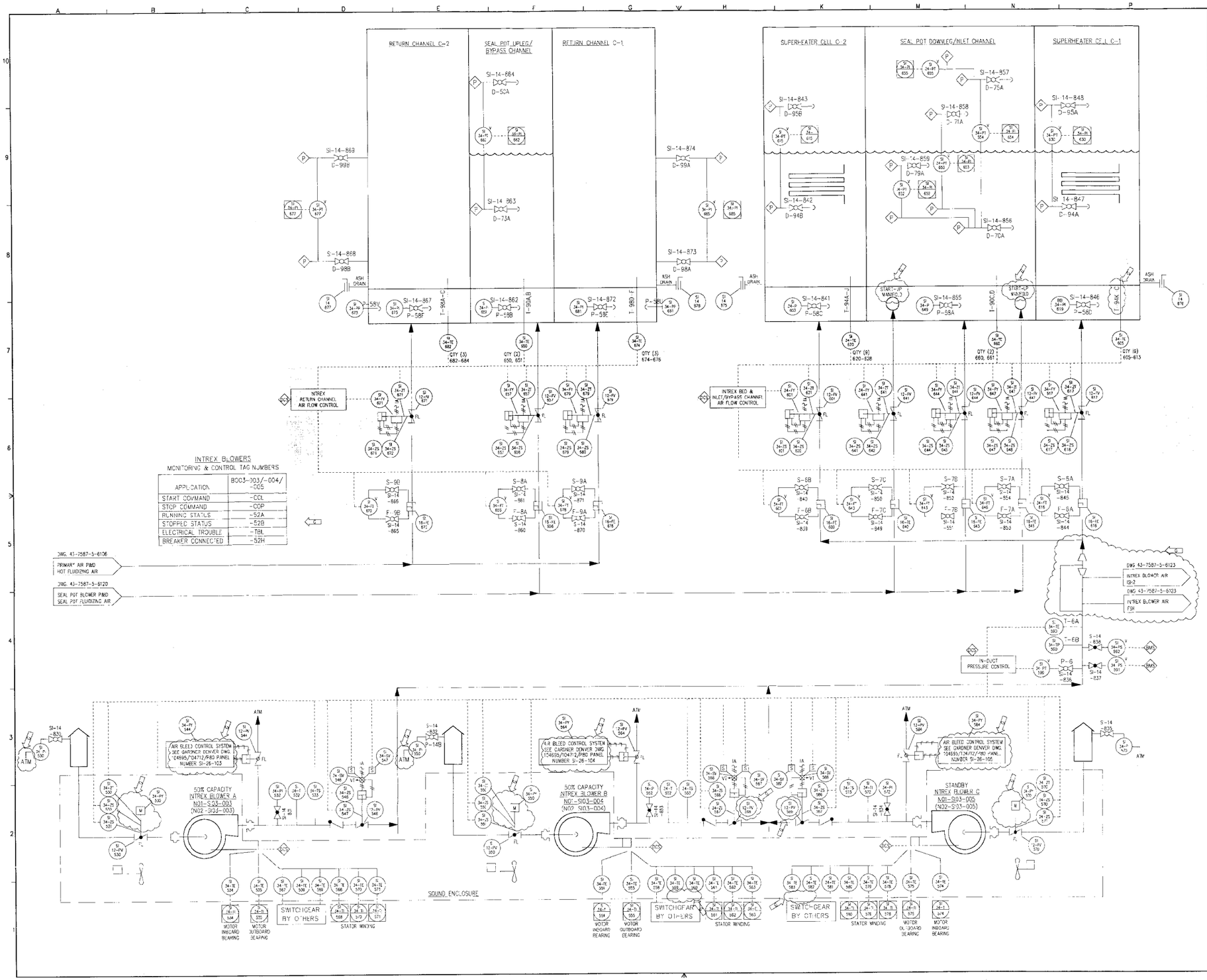


INTREX BLOWERS
MONITORING & CONTROL TAG NUMBERS

| APPLICATION | B003-003/-004/-005 |
|---|---|
| START COMMAND | -CCL |
| STOP COMMAND | -COP |
| RUNNING STATUS | -52A |
| STOPPED STATUS | -52B |
| ELECTRICAL TROUBLE | -TBL |
| BREAKER CONNECTED | -52H |

NOTES

1. DO NOT SCALE THIS DRAWING. USE FIGURE DIMENSIONS ONLY.
2. ABBREVIATIONS USED ON THIS DRAWING ARE IN ACCORDANCE WITH AMERICAN STANDARD "ABBREVIATIONS FOR USE ON DRAWING".
3. FOR SYMBOLS AND LEGEND SEE DRAWINGS No. 43-7587-5-6100 AND -6101.
4. ALL INSTRUMENTATION BY FWEC, UNLESS OTHERWISE DESIGNATED BY "V".
5. DISTRIBUTED CONTROL SYSTEM (DCS) FUNCTIONS ARE FURNISHED BY JEA.

| REV. | DATE | CH | DESCRIPTION |
|---|---|---|---|
| G | 10/19/01 | RV | ADDED NEW DUCT AND PART NUMBERS TO AIR BLEED SYSTEM. REVISED AIR BLEED CONTROL, INLET VALVE ACTUATOR AND RTD WIRING TO SWITCHGEAR. |
| F | 3/9/01 | DH | REVISED AS NOTED |
| E | 0/27/00 | SJM | REVISED AS NOTED |
| D | 7/7/00 | SJM | ADDED ASH DRAIN MANUAL GATE VALVES & INSTRUMENT ROOT VALVE TAG NUMBERS. |
| C | 12/16/99 | VS | DELETED: BLOWER SILENCERS & FAN TE'S ADDED: TE'S, TE'S, ITS, RPS, SOLENOID OPER. VALVE, ENCLOSURE WITH FANS, EXPANSION JOIN'S & ALL TAG NUMBERS. REVISED: NOTE 4. |
| B | 9/7/99 | RK | ADDED: VALVES, SWITCHES, TP & BRANCHES TO BLOWERS. DELETED: PRIMARY & SEAL POT AIR BRANCHES REVISED ALL INSTRUMENTATION ON INTREX. NOTE 3 & TITLE. |
| A | 4/4/99 | RK | INITIAL ISSUE |

REVISIONS

# PROCESS & INSTRUMENTATION DIAGRAM
## INTREX "C"
## INTERMEDIATE SUPERHEATER 1

JEA JACKSONVILLE ELECTRIC

NORTHSIDE UNITS 1 & 2 REPOWERING PROJECT
Equipment No.: N01- & N02-
B&V Drawing No.: 62.3401.05-C4011

| DRAWING NUMBER | SCALE: NONE | REVISION |
|---|---|---|
| 43-7587-5-6107 | | G |

| | | |
|---|---|---|
| DRAWN BY | RK | 3-30-99 |
| CHECKED BY | CB | 4-14-99 |
| APPROVED BY | CB | 4-14-99 |

FW

THIS DRAWING IS THE PROPERTY OF THE FOSTER WHEELER ENERGY CORPORATION HOPEWELL, N.J.

P062713.62.3401.05-C4011 St:RD 11/17/01 MM-02280

CRA33213 11-SEP-2002 15:29:25

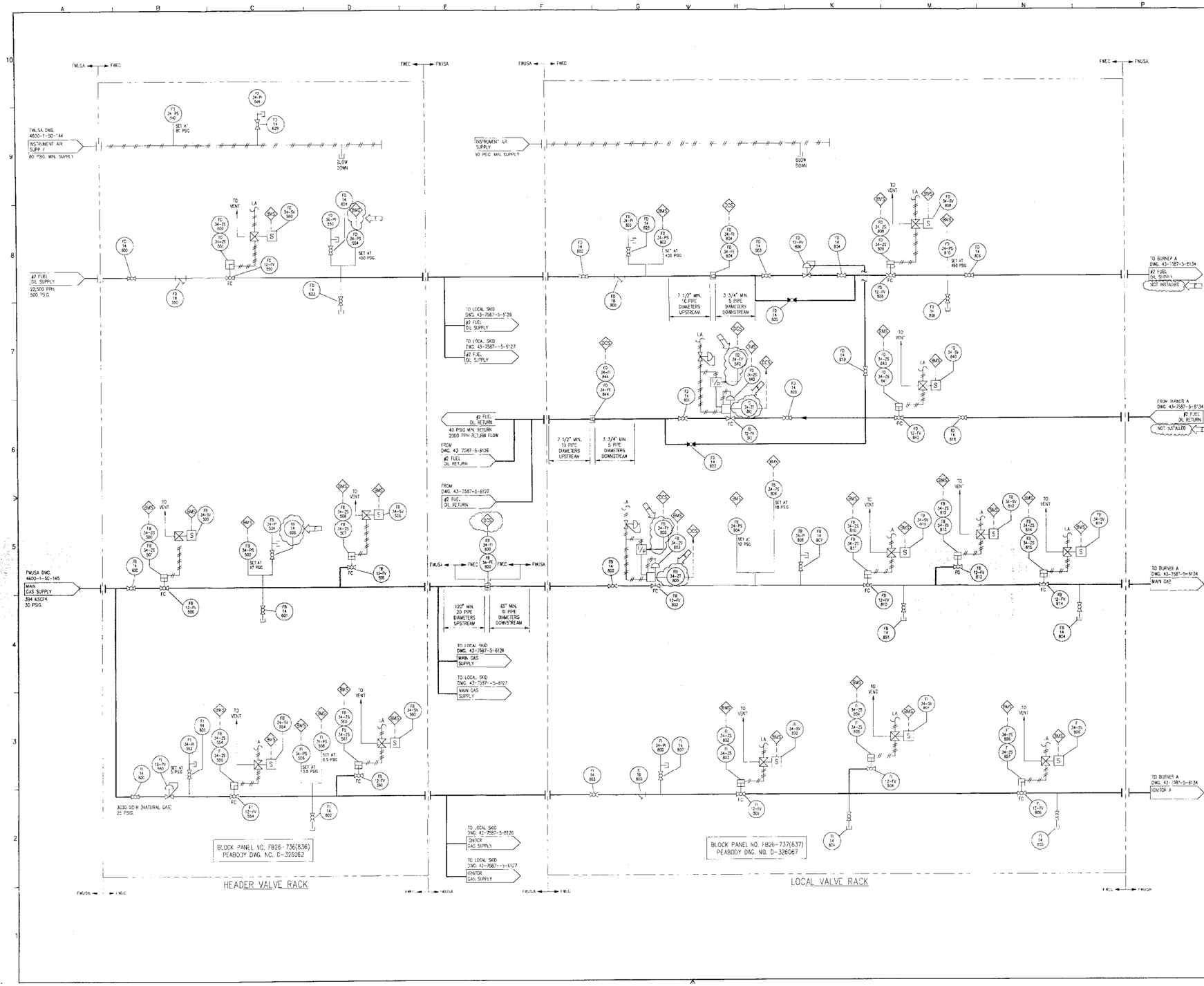


NOTES

1. DO NOT SCALE THIS DRAWING. USE FIGURE DIMENSIONS ONLY.
2. ABBREVIATIONS USED ON THIS DRAWING ARE IN ACCORDANCE WITH AMERICAN STANDARD "ABBREVIATIONS FOR USE ON DRAWING".
3. FOR SYMBOLS AND LEGEND SEE DRAWINGS No. 43-7587-5-6100 AND -6101.
4. THE ELBOW BURNER RACK MUST BE LOCATED AS CLOSE TO THE BURNER AS POSSIBLE TO FACILITATE PROPER BURNER LIGHTOFF.
5. DISTRIBUTED CONTROL SYSTEM (DCS) FUNCTIONS ARE FURNISHED BY JEA.
6. GAS FLOW METER AND ALL EQUIPMENT ON RACKS SUPPLIED BY PEABODY ENGINEERING.

| REV | DATE | DR | DESCRIPTION |
|---|---|---|---|
| F | 10/19/01 | MN | REVISED VALVE TAG NUMBERS |
| E | 10/27/00 | SJM | REVISED AS NOTED |
| D | 7/26/00 | SJM | REVISED AND REDRAWN |
| C | 12/16/99 | NJC | ADDED: NOTES 3 & 7 & HOLD. |
| B | 9-7-99 | RK | ADDED SCOPE BREAKS & DCS SYMBOLS. DELETED CONTROL CABINETS. PNEUMATIC CHANGER W/ SOLENOID VALVE TYPE ACTUATORS MORE MOV'S. REVISED SUPPLY LINES WITH FLANGE, BALL VALVES AND TITLE. |
| A | 4-14-99 | RK | INITIAL ISSUE. |

REVISIONS

PROCESS & INSTRUMENTATION DIAGRAM
ELBOW DUCT BURNER A

JEA JACKSONVILLE, FLORIDA
NORTHSIDE UNITS 1 & 2 REPOWERING PROJECT
Equipment No. 101- & 102-
B&V Drawing No. 62.3401.05-C4051

| DRAWING NUMBER | SCALE: NONE | REVISION |
|---|---|---|
| 43-7587-5-6108 | | F |

| | | | |
|---|---|---|---|
| DRAWN BY | RK | 3-31-99 | 200758700 UNIT 2 CDC |
| CHECKED BY | CB | 4-14-99 | 200761000 UNIT 1 JLA |
| APPROVED BY | CB | 4-14-99 | |

THIS DRAWING IS THE PROPERTY OF THE FOSTER WHEELER ENERGY CORPORATION HERSHELL, N.J.

CRA33213 11-SEP-2002 15:18:46

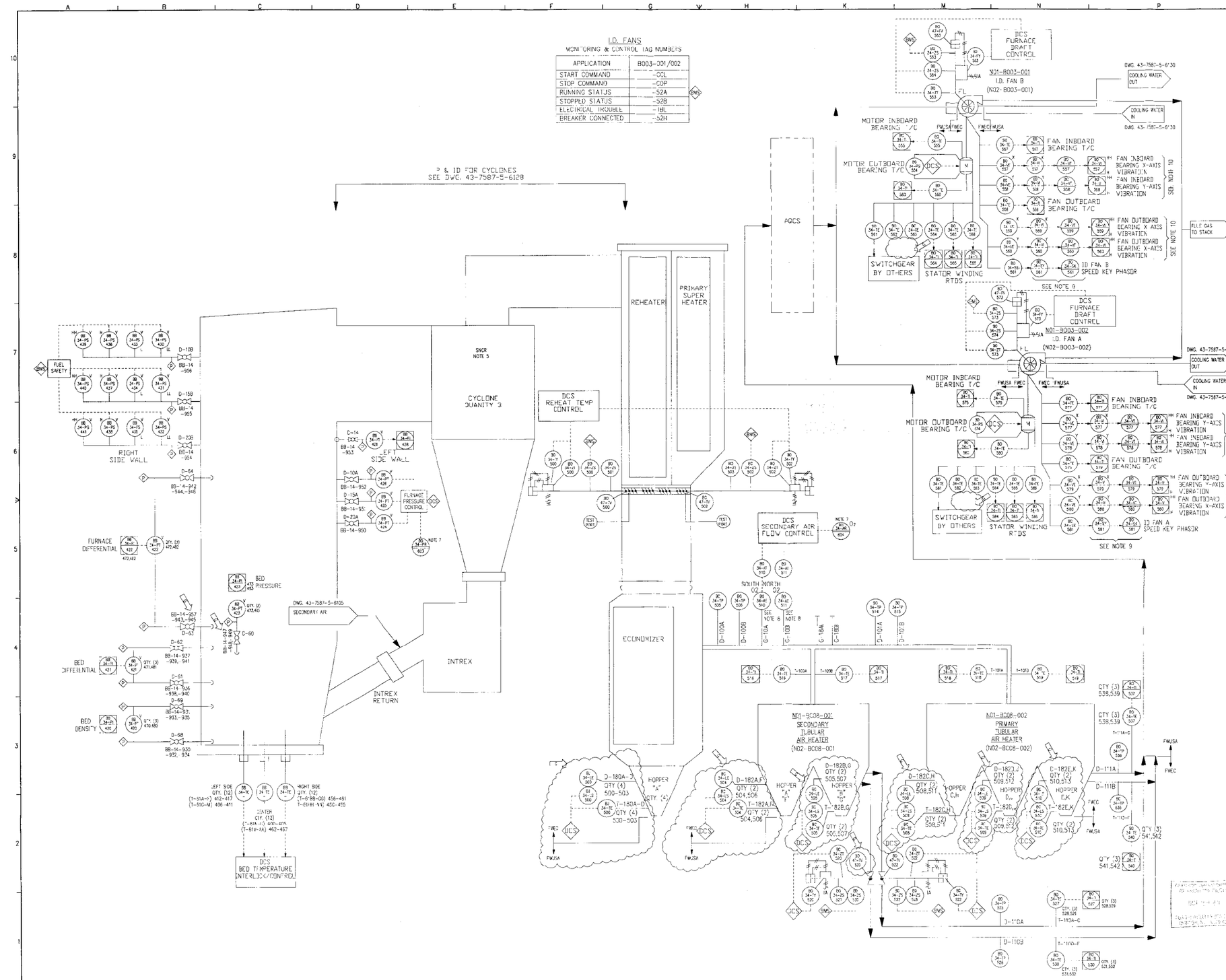


NOTES

1. DO NOT SCALE THIS DRAWING. USE FIGURE DIMENSIONS ONLY.
2. ABBREVATIONS USED ON THIS DRAWING ARE IN ACCORDANCE WITH AMERICAN STANDARD "ABBREVATIONS FOR USE ON DRAWING".
3. ALL INSTRUMENTATION BY FWEC, UNLESS OTHERWISE DESIGNATED BY "V".
4. FOR SYMBOLS AND LEGEND SEE DRAWINGS No. 43-7587-5-6100 AND -6101.
5. FOR AMMONIA INJECTION SEE P&ID No. 43-7587-5-6118
6. DISTRIBUTED CONTROL SYSTEM (DCS) FUNCTIONS ARE FURNISHED BY JEA.
7. ANALOG OUTPUTS TO MAIN CONTROL RECORDERS ARE REQUIRED. OUTPUT AND RECORDERS ARE NOT BY FOSTER WHEELER.
8. EACH OXYGEN TRANSMITTER HAS A DEDICATED REMOTE CALIBRATION UNIT. THESE UNITS ARE ASSIGNED PANEL NO'S. AS FOLLOWS:
   N01-BC34-AT510 (NORTH) N01-B026-759
   N01-BC34-AT511 (SOUTH) N01-B026-760
   N02-BC34-AT510 (NORTH) N02-B026-859
   N02-BC34-AT511 (SOUTH) N02-B026-860
9. VIBRATION AND SPEED MONITORING INSTRUMENTS ARE HOUSED AS FOLLOWS:
   - PROXIMETERS (FIELD MOUNTED)
     FAN A BC34-767(867)
     FAN B BC34-768(868)
   - MONITORS (TRANSMITTER/SWITCH IN INDOOR PANEL)
     FAN A, FAN B } BN27-769(869)
10. HIGH-HIGH VIBRATION SWITCHES WILL BE WIRED DIRECTLY TO DCS FOR FAN TRIP FUNCTION.

| REV | DATE | BY | DESCRIPTION |
|---|---|---|---|
| G | 12/19/01 | RN | ADDED HOPPER LOCAL ELEMENT. REVISED VALVE TAG NUMBERS. |
| F | 3/9/01 | RK | REVISED AS NOTED. |
| E | 10/27/00 | SAM | REVISED AS NOTED |
| D | 7/7/00 | SAM | ADDED: TEMPERATURE SENSOR TO PRIMARY & SECONDARY AIR HEATER INLET & OUTLET. REVISED: ID FANS A & B DAMPER ACTUATOR INSTRUMENT CONNECTIONS & FURNACE BED TEMPERATURE SENSOR CONNECTION POINTS & INSTRUMENT TAG NUMBERS. |
| C | 12/16/99 | MS | DELETED: ASH LINES. RELOCATED: FLUE INSTRUMENTS & CONTROL VALVE. REVISED: NOTE 3. ADDED: I.D. FANS, FLUE LINES, CONTROL VALVE, NOTES 5 & 6, ALL TAG NUMBERS & TABLE. |
| B | 9/7/99 | MS | REDRAWN |
| A | 4/14/99 | RK | INITIAL ISSUE |

REVISIONS

PROCESS & INSTRUMENTATION DIAGRAM
FLUE GAS

JEA JACKSONVILLE, FLORIDA
NORTHSIDE UNITS 1 & 2 REPOWERING PROJECT
Equipment No.: N01- & N02-
B&W Drawing No.: 62.3401.05-C4013

| DRAWING NUMBER | SCALE | REVISION |
|---|---|---|
| 43-7587-5-6109 | NONE | G |

| | | | |
|---|---|---|---|
| DRAWN BY | RK | 3-31-99 | 200758703 UNIT 2 CCE |
| CHECKED BY | CB | 4-14-99 | 200758703 UNIT 1 JEA |
| APPROVED BY | CB | 4-14-99 | |

FOSTER WHEELER ENERGY CORPORATION
PERRYVILLE, NJ

P062713.62.3401.05-C4013 St:RD 11/17/01 MM-02280

CRA33213 11-SEP-2002 15:18:00

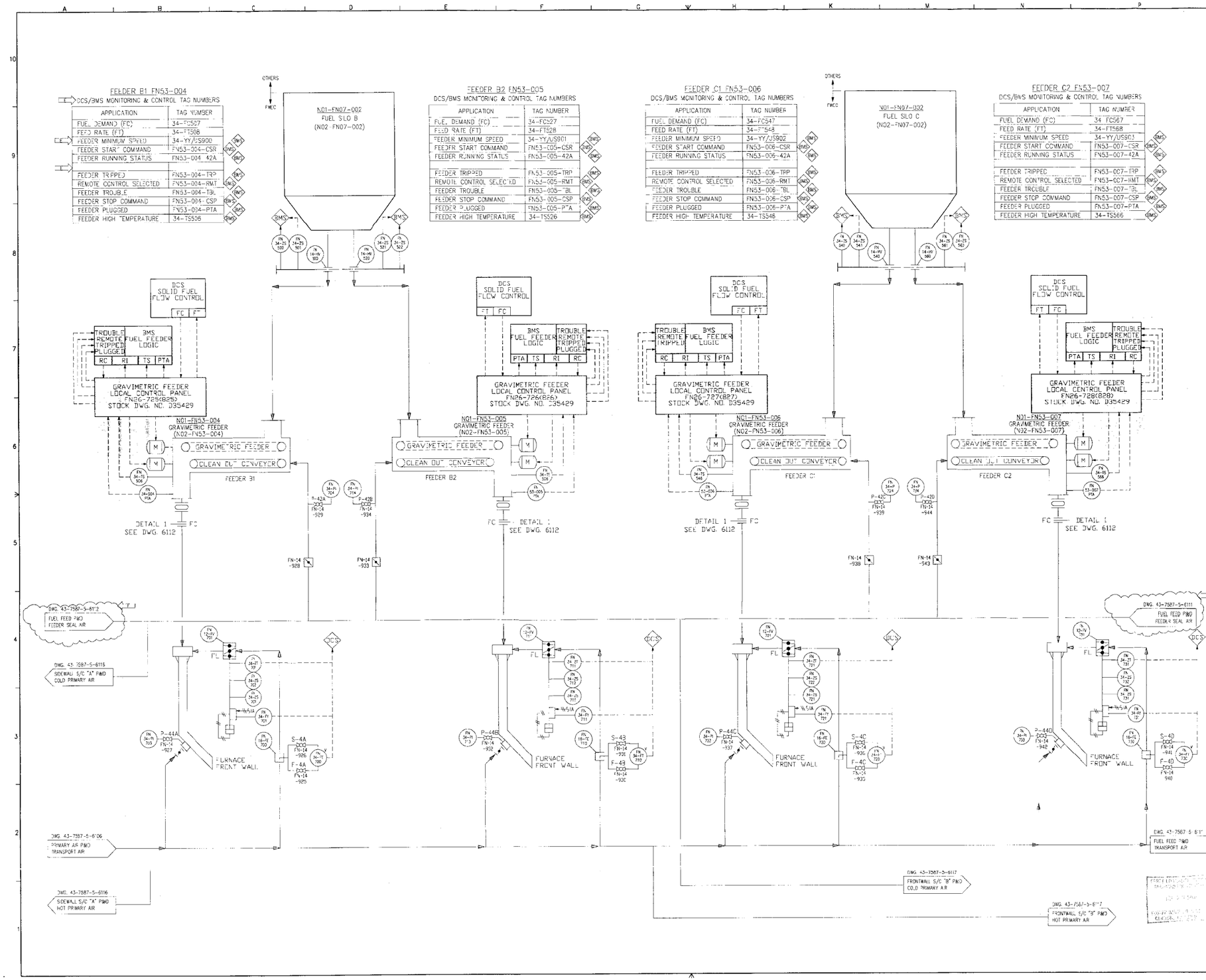


NOTES

1. DO NOT SCALE THIS DRAWING. USE FIGURE DIMENSIONS ONLY.
2. ABBREVIATIONS USED ON THIS DRAWING ARE IN ACCORDANCE WITH AMERICAN STANDARD "ABBREVIATIONS FOR USE ON DRAWING".
3. ALL INSTRUMENTATION BY FMEC, UNLESS OTHERWISE DESIGNATED BY "V".
4. FOR SYMBOLS AND LEGEND SEE DRAWINGS No. 43-7587-5-6100 AND -6101.
5. DISTRIBUTED CONTROL SYSTEM (DCS) FUNCTIONS ARE FURNISHED BY JEA.

| REV. | DATE | BY | DESCRIPTION |
|---|---|---|---|
| F | 10/16/01 | RN | REVISED FEEDER SEAL AIR ARROWS |
| E | 10/27/00 | MS | REVISED AS NOTED |
| D | 7/7/00 | SJN | ADDED TEMP SWITCH TO EACH FEEDER LINE, VALVE TAG NUMBERS. REVISED EQUIPMENT ID TAG, FEEDER MONITORING & CONTROL TAG NUMBERS. |
| C | 12/16/99 | MS | ADDED INSTRUMENTS, ALL TAG NUMBERS, NOTE 5 & TABLES. REVISED NOTE 3. |
| B | 9-7-99 | MS | ADDED CONVEYOR TAGS, PTS TO SEAL AIR, INSTRUMENT CONNECTION NUMBERS, REFERENCE DRAWING & FUEL CHUTE LS. DELETED LINE SIZES, BUNKER LS, SEAL AIR FT, FS, PS & TS. REVISED NOTE 3, WEIGH CELL DESIGNATION & BUNKER DISCHARGE GATES. SEAL AIR WAS TRANSPORT AIR. FS WAS LS |
| A | 4-14-99 | RK | INITIAL ISSUE |

REVISIONS

PROCESS & INSTRUMENTATION DIAGRAM
FUEL FEED (FRONT WALL)

JEA
NORTH-SIDE UNITS 1 & 2 REPOWERING PROJECT
Equipment No: N01-FN & N02-FN
H&V Drawing No.: 6P-3402.05-C4014

| DRAWING NUMBER | SCALE | REVISION |
|---|---|---|
| 43-7587-5-6110 | NONE | F |

| | | |
|---|---|---|
| DRAWN BY | RK | 3-31-99 |
| CHECKED BY | CB | 4-14-99 |
| APPROVED BY | CB | 4-14-99 |

200758700 UNIT 2 DOE
200616300 UNIT 1 JEA

THIS DRAWING IS THE PROPERTY OF THE FOSTER WHEELER ENERGY CORPORATION PERRYVILLE, N.J.

P062713.62.3401.05-C4014 St:RD 11/17/01 MM-02280

CRA33213 11-SEP-2002 15:17:07

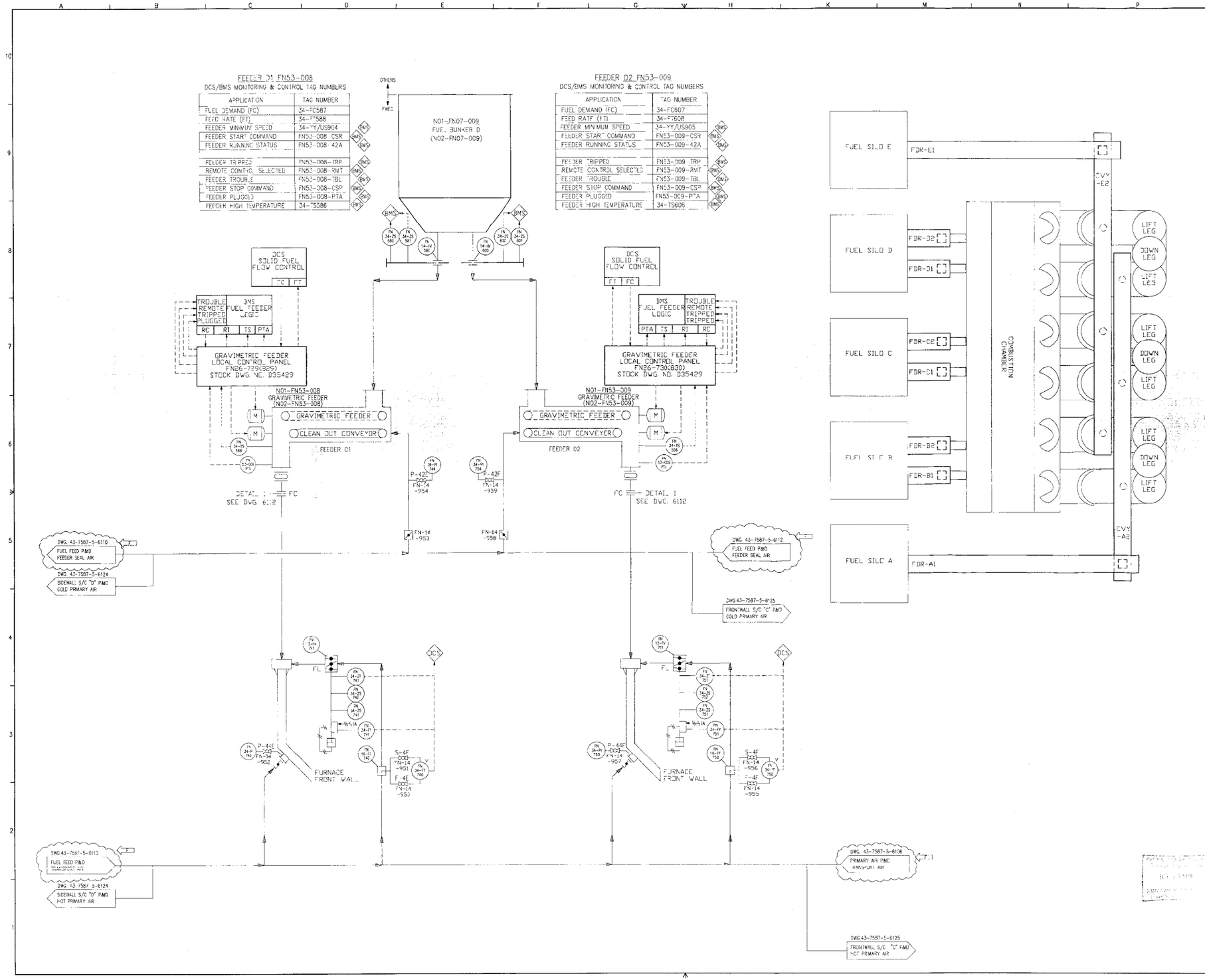


NOTES

1. DO NOT SCALE THIS DRAWING. USE FIGURE DIMENSIONS ONLY.
2. ABBREVIATIONS USED ON THIS DRAWING ARE IN ACCORDANCE WITH AMERICAN STANDARD "ABBREVIATIONS FOR USE ON DRAWING".
3. ALL INSTRUMENTATION BY FWEC, UNLESS OTHERWISE DESIGNATED BY "V".
4. FOR SYMBOLS AND LEGEND SEE DRAWINGS No. 43-7587-5-6100 AND -6101.
5. DISTRIBUTED CONTROL SYSTEM (DCS) FUNCTIONS ARE FURNISHED BY JEA.

| REV. | DATE | BY | DESCRIPTION |
|---|---|---|---|
| F | 10/19/01 | RN | REVISED FEEDER SEAL AIR LINE |
| E | 10-27-00 | VS | REVISED AS NOTED |
| D | 7-7-00 | SJM | REVISED EQUIPMENT IDENTIFICATION TAG. REVISED ALL INSTRUMENT TYPE CODES. ADDED TEMP. SWITCH TO EACH FEEDER LINE. REVISED FEEDER MONITORING AND CONTROL TAG NUMBERS. ADDED INSTRUMENT "KOD" VALVE TAG NUMBERS |
| C | 12/16/99 | VS | ADDED INSTRUMENTS, AL, TAG NUMBERS, NOTE 5 & TABLES. REVISED NOTE 3. |
| B | 9-7-99 | VS | ADDED CONVEYOR TAGS, PI'S TO SEAL AIR, INSTRUMENT CONNECTION NUMBERS, REFERENCE DRAWING & FUEL CHUTE LS. DELETED LINE SIZES, BUNKER LS, SEAL AIR FI, FS, PS &TE. REVISED NOTE 3. WEIGH CELL DESIGNATION & BUNKER DISCHARGE GATES. FS WAS LS. |
| A | 4-14-99 | RK | INITIAL ISSUE |

REVISIONS

PROCESS & INSTRUMENTATION DIAGRAM
FUEL FEED (FRONT WALL)

JEA JACKSONVILLE, FLORIDA
NORTHSIDE UNITS 1 & 2 REPOWERING PROJECT
Equipment No.: N01-FN & N02-FN
JEA Drawing No.: 68-942.05-C4015

| DRAWING NUMBER | SCALE | NONE |
|---|---|---|
| 43-7587-5-6111 | | REVISION F |

| | | | |
|---|---|---|---|
| DRAWN BY | RK | 3-31-99 | 200758700 UNIT 2 DOE |
| CHECKED BY | CB | 4-14-99 | 200761000 UNIT 1 JEA |
| APPROVED BY | CB | 4-14-99 | |

THIS DRAWING IS THE PROPERTY OF THE FOSTER WHEELER ENERGY CORPORATION PERRYVILLE, N.J.

2/3 PLOT 0 1.5" 1" = 1.6"

CRA33213 11-SEP-2002 15:35:30

FEEDER A1 FN53-003, CONVEYOR CVY-A2 FN53-001

DCS/BMS MONITORING & CONTROL TAG NUMBERS

| APPLICATION | TAG NUMBER |
|---|---|
| FEEDER FUEL DEMAND (FC) | 34-FC627 |
| FEEDER FEED RATE (FT) | 34-FT628 |
| FEEDER MINIMUM SPEED | 34-YY/US627 |
| FEEDER START COMMAND | FN53-003-CSR |
| FEEDER RUNNING STATUS | FN53-003-42A |
| FEEDER TRIPPED | FN53-003-TRP |
| FEEDER REMOTE CTRL SELECT | FN53-003-RMT |
| FEEDER TROUBLE | FN53-003-TBL |
| CONVEYOR SPEED | 34-ST635 |
| CONVEYOR START COMMAND | FN53-001-CSR |
| CONVEYOR RUNNING STATUS | FN53-001-42A |
| FEEDER STOP COMMAND | FN53-003-CSP |
| CONVEYOR STOP COMMAND | FN53-001-CSP |
| FEEDER PLUGGED | FN53-001-PTA |
| FEEDER HIGH TEMPERATURE | 34-TS626 |

FEEDER E1 FN53-010, CONVEYOR CVY-E2 FN53-001

DCS/BMS MONITORING & CONTROL TAG NUMBERS

| APPLICATION | TAG NUMBER |
|---|---|
| FEEDER FUEL DEMAND (FC) | 34-FC667 |
| FEEDER FEED RATE (FT) | 34-FT668 |
| FEEDER MINIMUM SPEED | 34-YY/US667 |
| FEEDER START COMMAND | FN53-010-CSR |
| FEEDER RUNNING STATUS | FN53-010-42A |
| FEEDER TRIPPED | FN53-010-TRP |
| FEEDER REMOTE CTRL SELECT | FN53-010-RMT |
| FEEDER TROUBLE | FN53-010-TBL |
| CONVEYOR SPEED | 34-ST675 |
| CONVEYOR START COMMAND | FN53-002-CSR |
| CONVEYOR RUNNING STATUS | FN53-002-42A |
| FEEDER STOP COMMAND | FN53-010-CSP |
| CONVEYOR STOP COMMAND | FN53-002-CSP |
| FEEDER PLUGGED | FN53-010-PTA |
| FEEDER HIGH TEMPERATURE | 34-TS666 |

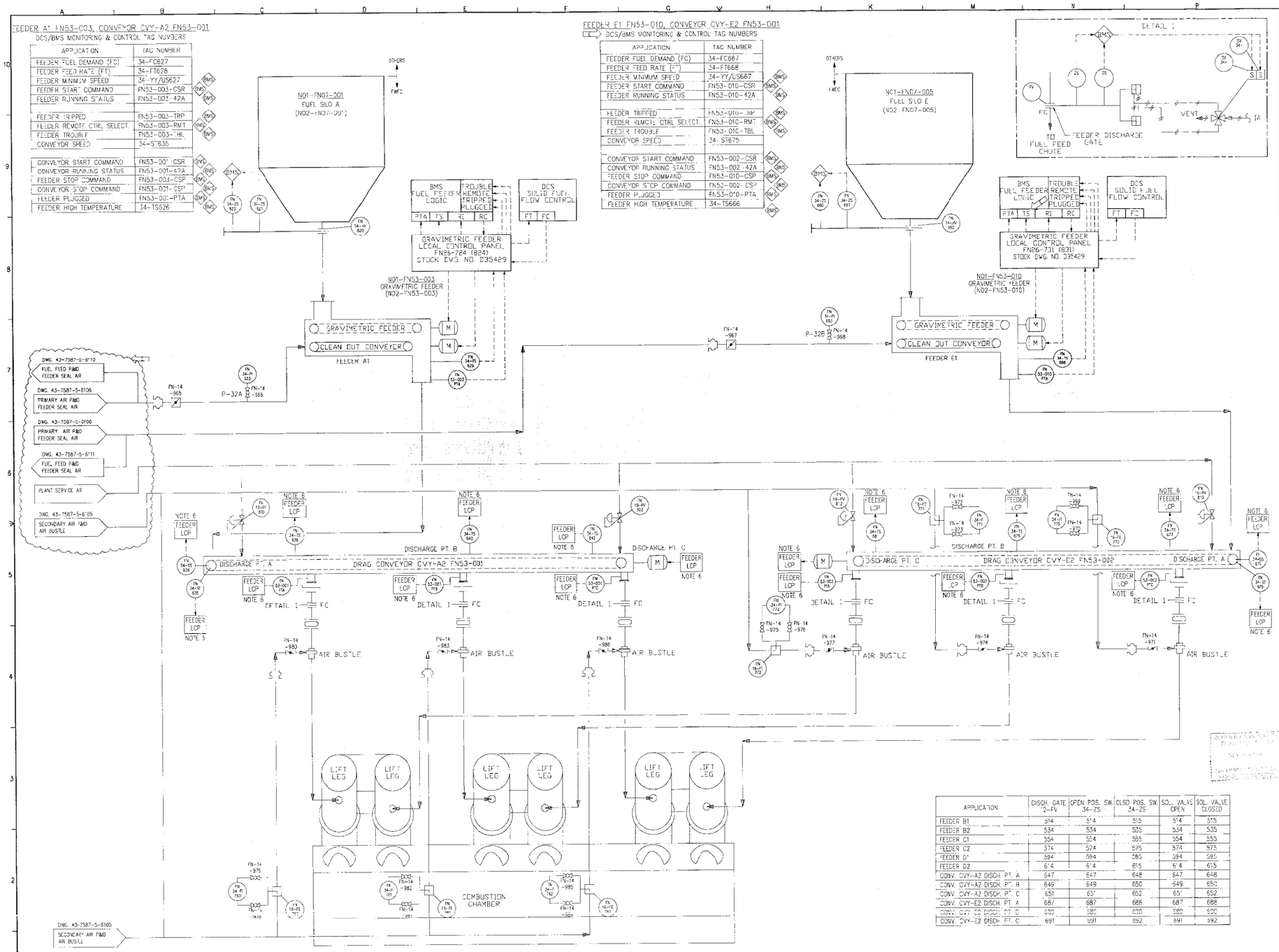


| APPLICATION | DISCH. GATE 2-FV | OPEN POS. SW. 34-ZS | CLSD POS. SW. 34-ZS | SOL. VALVE OPEN | SOL. VALVE CLOSED |
|---|---|---|---|---|---|
| FEEDER B1 | 514 | 514 | 515 | 514 | 515 |
| FEEDER B2 | 534 | 534 | 535 | 534 | 535 |
| FEEDER C1 | 554 | 554 | 555 | 554 | 555 |
| FEEDER C2 | 574 | 574 | 575 | 574 | 575 |
| FEEDER D1 | 594 | 594 | 595 | 594 | 595 |
| FEEDER D2 | 614 | 614 | 615 | 614 | 615 |
| CONV. CVY-A2 DISCH. PT. A | 647 | 647 | 648 | 647 | 648 |
| CONV. CVY-A2 DISCH. PT. B | 649 | 649 | 650 | 649 | 650 |
| CONV. CVY-A2 DISCH. PT. C | 651 | 651 | 652 | 651 | 652 |
| CONV. CVY-E2 DISCH. PT. A | 687 | 687 | 688 | 687 | 688 |
| CONV. CVY-E2 DISCH. PT. B | 690 | 690 | 690 | 690 | 690 |
| CONV. CVY-E2 DISCH. PT. C | 691 | 691 | 692 | 691 | 692 |

NOTES

1. DO NOT SCALE THIS DRAWING. USE FIGURE DIMENSIONS ONLY.
2. ABBREVIATIONS USED ON THIS DRAWING ARE IN ACCORDANCE WITH AMERICAN STANDARD "ABBREVIATIONS FOR USE ON DRAWING".
3. ALL INSTRUMENTATION BY FWEC UNLESS OTHERWISE DESIGNATED BY "V".
4. FOR SYMBOLS AND LEGEND SEE DRAWINGS No. 43-7587-5-6100 AND -6101.
5. DISTRIBUTED CONTROL SYSTEM (DCS) FUNCTIONS ARE FURNISHED BY JEA.
6. CONVEYOR SIGNALS CONNECTED AT LOCAL TERMINAL BOXES FN26-734 (834) AND FN26-735 (835) THEN ROUTED TO ASSOCIATED FEEDER LCP'S.

| REV | DATE | BY | DESCRIPTION |
|---|---|---|---|
| F | 10/15/01 | RK | REVISED FEEDER SEAL AIR LINE. |
| E | 10-27-00 | MT | REVISED AS NOTED. |
| D | 7-6-00 | SJM | ADDED: TEMP SWITCH TO EACH FEEDER LINE & INSTRUMENT ROOT VALVE NUMBERS. REVISED: FEEDER MONITORING & CONTROL TAG NUMBERS. |
| C | 12/16/99 | MS | ADDED: INSTRUMENTS, ALL TAG NUMBERS, NOTE 5 & TABLES. REVISED: NOTE 3. |
| B | 9-7-99 | MS | DELETED LS FROM COAL BUNKERS, MOTOR VALVE FROM CONVEYOR, FLOW INSTRUMENTS & LINE SIZES. ADDED LS, RTS, ST & SLIDE GATES. ADDED AND RELOCATED EXPANSION JOINTS. REVISED BMS & LS TAGS & LIFT LEG FEEDS. |
| A | 4-14-99 | RK | INITIAL ISSUE |

REVISIONS

PROCESS & INSTRUMENTATION DIAGRAM
FUEL FEED (REAR WALL)

JEA JACKSONVILLE, FLORIDA

NORTHSIDE UNITS 1 & 2 REPOWERING PROJECT
Equipment No.: N02-FN & N02-FN
B&W Drawing No.: 62.340.05-C4016

| DRAWING NUMBER | SCALE | REVISION |
|---|---|---|
| 43-7587-5-6112 | NONE-1-0" | F |

| | | | |
|---|---|---|---|
| DRAWN BY | RK | 3-31-99 | 200758700 UNIT 2 CODE |
| CHECKED BY | CB | 4-14-99 | 200761000 UNIT 1 JEA |
| APPROVED BY | CB | 4-14-99 | |

FW FOSTER WHEELER ENERGY CORPORATION PERRYVILLE, N.J.

THIS DRAWING IS THE PROPERTY OF THE FOSTER WHEELER ENERGY CORPORATION. [illegible] © 1999 FOSTER WHEELER ENERGY CORPORATION ALL RIGHTS RESERVED

2/3 PLOT 0 1.5" 1"= 1.6"

P062713.62.3401.05-C4016 St:RD 11/17/01 MM-02280

CRA33213 11-SEP-2002 15:34:51

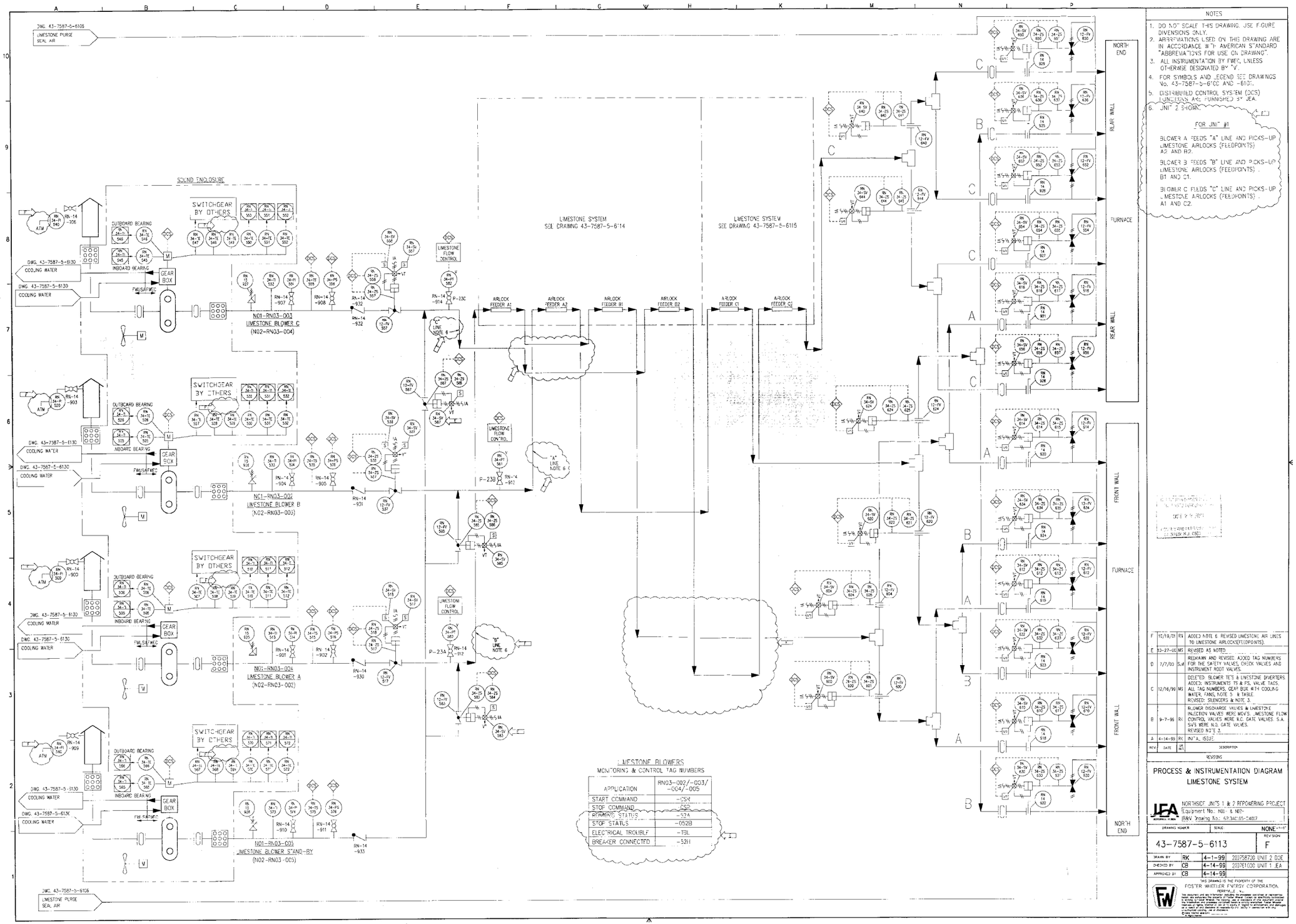


NOTES

1. DO NOT SCALE THIS DRAWING. USE FIGURE DIMENSIONS ONLY.
2. ABBREVIATIONS USED ON THIS DRAWING ARE IN ACCORDANCE WITH AMERICAN STANDARD "ABBREVIATIONS FOR USE ON DRAWING".
3. ALL INSTRUMENTATION BY FWEC, UNLESS OTHERWISE DESIGNATED BY "V".
4. FOR SYMBOLS AND LEGEND SEE DRAWINGS No. 43-7587-5-6100 AND -6101.
5. DISTRIBUTED CONTROL SYSTEM (DCS) FUNCTIONS ARE FURNISHED BY JEA.
6. UNIT 2 SHOWN.

FOR UNIT #1

BLOWER A FEEDS "A" LINE AND PICKS-UP LIMESTONE AIRLOCKS (FEEDPOINTS) A2 AND B2.

BLOWER B FEEDS "B" LINE AND PICKS-UP LIMESTONE AIRLOCKS (FEEDPOINTS) B1 AND C1.

BLOWER C FEEDS "C" LINE AND PICKS-UP LIMESTONE AIRLOCKS (FEEDPOINTS) A1 AND C2.

| REV | DATE | BY | DESCRIPTION |
|---|---|---|---|
| F | 12/19/01 | RK | ADDED NOTE 6 REVISED LIMESTONE AIR LINES TO LIMESTONE AIRLOCKS(FEEDPOINTS). |
| E | 03-27-00 | MS | REVISED AS NOTED. |
| D | 7/7/00 | SJM | REDRAWN AND REVISED: ADDED TAG NUMBERS FOR THE SAFETY VALVES, CHECK VALVES AND INSTRUMENT ROOT VALVES. |
| C | 12/16/99 | MS | DELETED: BLOWER TE'S & LIMESTONE DIVERTERS. ADDED: INSTRUMENTS TS & PS, VALVE TAGS, ALL TAG NUMBERS, GEAR BOX WITH COOLING WATER, FANS, NOTE 5 & TABLE. REVISED: SILENCERS & NOTE 3. |
| B | 9-7-99 | RK | BLOWER DISCHARGE VALVES & LIMESTONE INJECTION VALVES WERE M.O. GATE VALVES. S.A. SV'S WERE N.O. GATE VALVES. REVISED NOTE 3. |
| A | 4-14-99 | RK | INITIAL ISSUE |

REVISIONS

PROCESS & INSTRUMENTATION DIAGRAM
LIMESTONE SYSTEM

JEA
NORTHSIDE UNITS 1 & 2 REPOWERING PROJECT
Equipment No.: N01 & N02
B&W Drawing No.: 42-3401-05-C4017

| DRAWING NUMBER | SCALE | REVISION |
|---|---|---|
| 43-7587-5-6113 | NONE | F |

| | | | |
|---|---|---|---|
| DRAWN BY | RK | 4-1-99 | 203758700 UNIT 2 DOE |
| CHECKED BY | CB | 4-14-99 | 203761000 UNIT 1 JEA |
| APPROVED BY | CB | 4-14-99 | |

THIS DRAWING IS THE PROPERTY OF THE FOSTER WHEELER ENERGY CORPORATION.

PROPRIETARY NOTICE
This document and any information, including the proprietary contents of representations, herein are exclusive the property of Foster Wheeler Energy Corporation (collectively "Foster Wheeler"). Any reproduction, in whole or in part, or any disclosure of information, or any other use of this document or information, without Foster Wheeler's prior written consent, is strictly prohibited. Foster Wheeler shall not be responsible for any direct, indirect, consequential or other damages or loss of any kind or nature in connection with the use of this document or information herein by any person or entity.
© 2000 Foster Wheeler Corporation
All Rights Reserved

P062713.62.3401.05-C4017 St:RD 11/17/01 MM-02280

CRA33213 11-SEP-2002 15:34:12

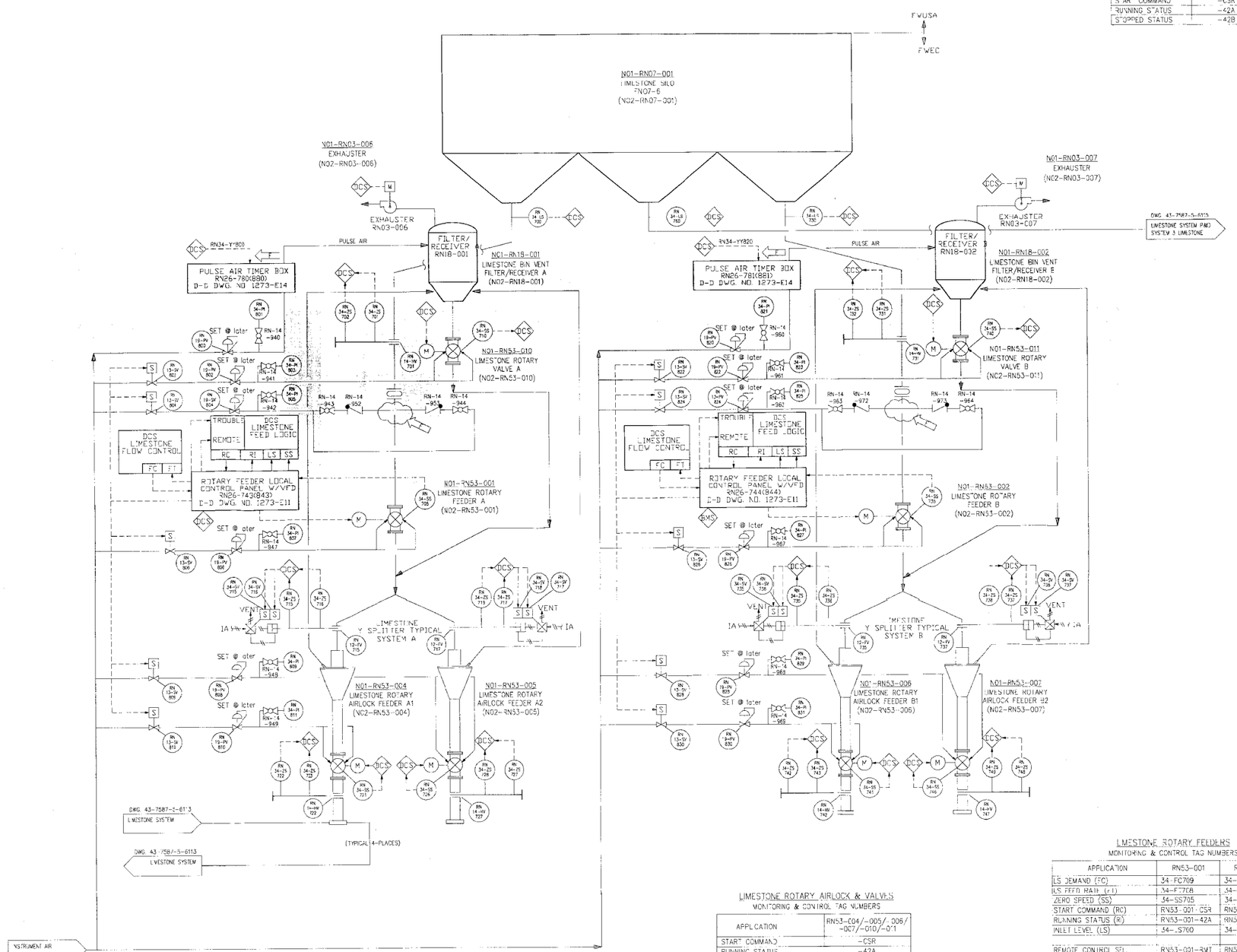


EXHAUSTER
MONITORING & CONTROL TAG NUMBERS

| APPLICATION | RN03-006/-007 |
|---|---|
| START COMMAND | -CSR |
| RUNNING STATUS | -42A |
| STOPPED STATUS | -42B |

LIMESTONE ROTARY AIRLOCK & VALVES
MONITORING & CONTROL TAG NUMBERS

| APPLICATION | RN53-004/-005/-006/-007/-010/-011 |
|---|---|
| START COMMAND | -CSR |
| RUNNING STATUS | -42A |
| STOPPED STATUS | -42B |

LIMESTONE ROTARY FEEDERS
MONITORING & CONTROL TAG NUMBERS

| APPLICATION | RN53-001 | RN53-002 |
|---|---|---|
| LS DEMAND (FC) | 34-FC709 | 34-FC739 |
| LS FEED RATE (FI) | 34-FI708 | 34-FI738 |
| ZERO SPEED (SS) | 34-SS705 | 34-SS735 |
| START COMMAND (RC) | RN53-001-CSR | RN53-002-CSR |
| RUNNING STATUS (RI) | RN53-001-42A | RN53-002-42A |
| INLET LEVEL (LS) | 34-LS700 | 34-LS730 |
| REMOTE CONTROL SEL. | RN53-001-RMT | RN53-002-RMT |
| TROUBLE | RN53-001-TBL | RN53-002-TBL |
| FEEDER TRIP COMMAND (MFT) | RN53-001-PTA | RN53-002-PTA |
| STOPPED STATUS | RN53-001-42B | RN53-002-42B |

NOTES

1. DO NOT SCALE THIS DRAWING. USE FIGURE DIMENSIONS ONLY.
2. ABBREVATIONS USED ON THIS DRAWING ARE IN ACCORDANCE WITH AMERICAN STANDARD "ABBREVIATIONS FOR USE ON DRAWING".
3. ALL INSTRUMENTATION BY FWEC, UNLESS OTHERWISE DESIGNATED BY "Y".
4. FOR SYMBOLS AND LEGEND SEE DRAWINGS No. 43-7587-5-6100 AND -6101.
5. DISTRIBUTED CONTROL SYSTEM (DCS) FUNCTIONS ARE FURNISHED BY JEA.
6. UNLESS OTHERWISE INDICATED ALL FIELD DEVICES SHOWN FOR EACH LIMESTONE TRAIN ARE WIRED TO/FROM DCS VIA THE ASSOCIATED LOCAL CONTROL PANEL. REFER TO REFERENCED WIRING DIAGRAM. ALL MOTOR OPERATING STATUS SIGNALS ARE WIRED DIRECTLY FROM ASSOCIATED MCC.

| REV | DATE | BY | DESCRIPTION |
|---|---|---|---|
| F | 10/9/01 | ECA | REVISED LIMESTONE PIPE. DELETED SIGNAL QUANTITY INTO TIMER BOX. |
| E | 10-27-00 | MS | REVISED AS NOTED |
| D | 7-7-00 | SJM | ADDED MANUAL VALVE & INSTRUMENT, ROOT VALVE TAG NUMBERS. ADDED FEEDER TRIP COMMAND & VALVE STOP COMMAND SIGNALS. |
| C | 12/16/99 | MS | ADDED INSTRUMENTS LS, VALVE TAGS, ALL TAG NUMBERS, NOTE 5 & TABLES. REVISED NOTE 3. |
| B | 9-7-99 | RK | ADDED EQUIPT. #'S, DCS'S WERE BMS. DELETED SILO LS'S, ADDED LS'S @ SLIP DISCH. CHUTES. REVISED NOTE 3. |
| A | 4-14-99 | RK | INITIAL ISSUE |

REVISIONS

PROCESS & INSTRUMENTATION DIAGRAM
LIMESTONE SYSTEM

JEA
NORTHSIDE UNITS 1 & 2 REPOWERING PROJECT
Equipment No.: N01- & N02-
BWI Drawing No.: 43-7587-5-6114

| DRAWING NUMBER | SCALE | REVISION |
|---|---|---|
| 43-7587-5-6114 | NONE | F |

| | | | |
|---|---|---|---|
| DRAWN BY | RK | 4-1-99 | 200158700 UNIT 2 JOE |
| CHECKED BY | CB | 4-14-99 | 200761000 UNIT 1 JEA |
| APPROVED BY | CB | 4-14-99 | |

FW
THIS DRAWING IS THE PROPERTY OF THE
FOSTER WHEELER ENERGY CORPORATION
CLINTON, N.J.

P062713.62.3401.05-C4018 St:RD 11/17/01 MM-02280

CRA33213 11-SEP-2002 15:33:33

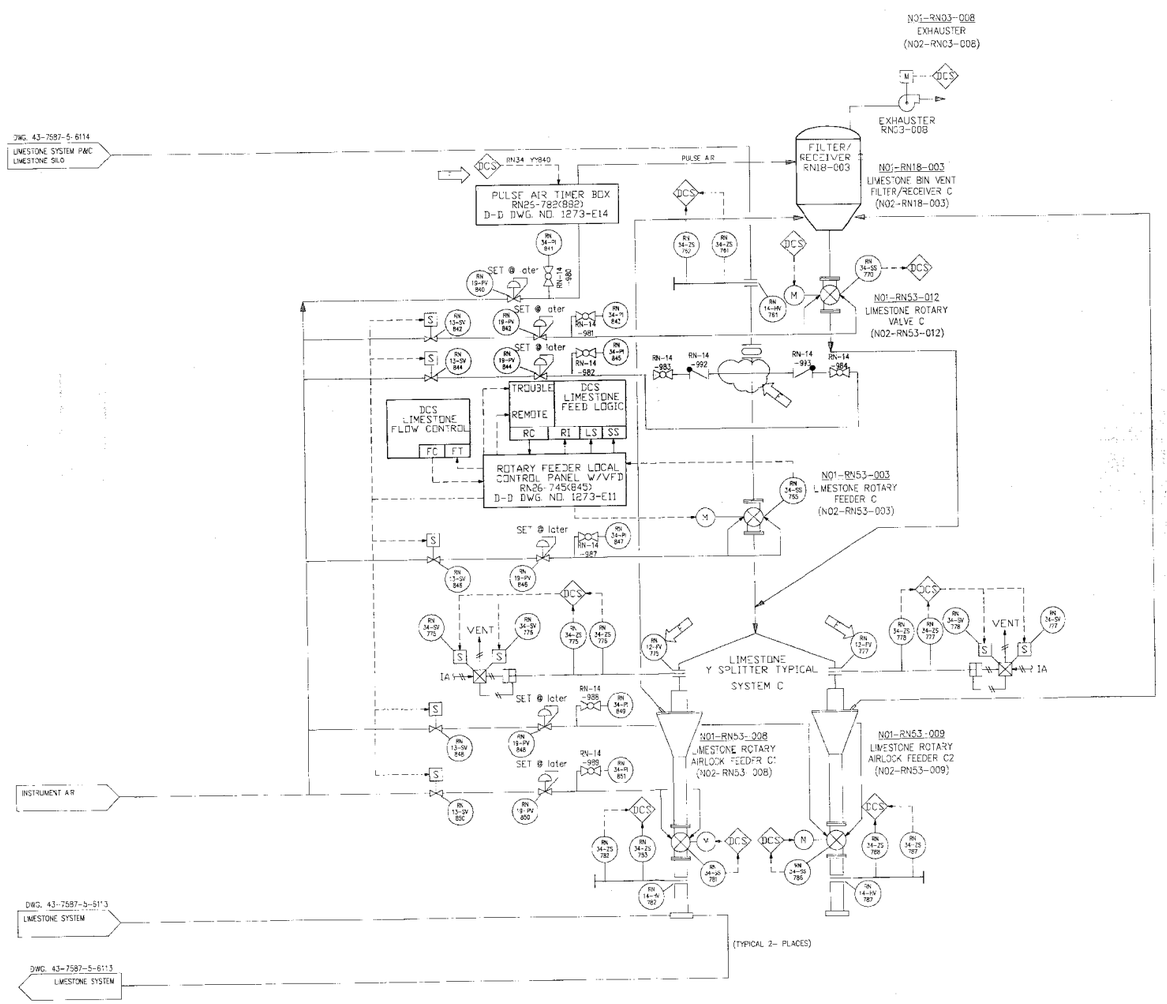


EXHAUSTER
MONITORING & CONTROL TAG NUMBERS

| APPLICATION | RN03-008 |
|---|---|
| START COMMAND | -CSR |
| RUNNING STATUS | -42A |
| STOPPED STATUS | -42B |

LIMESTONE ROTARY FEEDERS
MONITORING & CONTROL TAG NUMBERS

| APPLICATION | RN53-003 |
|---|---|
| LS DEMAND (FC) | 34-FC769 |
| LS FEED RATE (FT) | 34-FT768 |
| ZERO SPEED (SS) | 34-SS765 |
| START COMMAND (RI) | RN53-003-CSR |
| RUNNING STATUS (RI) | RN53-003-42A |
| INLET LEVEL (LS) | 34-LS760 |
| REMOTE CONTROL SEL | RN53-003-RMT |
| TROUBLE | RN53-003-TBL |
| FEEDER TRIP COMMAND (MFT) | RN53-003-PTA |
| STOPPED STATUS | RN53-003-42B |

LIMESTONE ROTARY AIRLOCK & VALVES
MONITORING & CONTROL TAG NUMBERS

| APPLICATION | RN53-008/-009/-012 |
|---|---|
| START COMMAND | -CSR |
| RUNNING STATUS | -42A |
| STOPPED STATUS | -42B |

NOTES

1. DO NOT SCALE THIS DRAWING. USE FIGURE DIMENSIONS ONLY.
2. ABBREVIATIONS USED ON THIS DRAWING ARE IN ACCORDANCE WITH AMERICAN STANDARD "ABBREVIATIONS FOR USE ON DRAWING".
3. ALL INSTRUMENTATION BY FWEC, UNLESS OTHERWISE DESIGNATED BY "V".
4. FOR SYMBOLS AND LEGEND SEE DRAWINGS No. 43-7587-5-6100 AND -6101.
5. DISTRIBUTED CONTROL SYSTEM (DCS) FUNCTIONS ARE FURNISHED BY JEA.
6. UNLESS OTHERWISE INDICATED ALL FIELD DEVICES SHOWN FOR EACH LIMESTONE TRAIN ARE WIRED TO/FROM DCS VIA THE ASSOCIATED LOCAL CONTROL PANEL. REFER TO REFERENCED WIRING DIAGRAM. ALL MOTOR OPERATING STATUS SIGNALS ARE WIRED DIRECTLY FROM ASSOCIATED MCC.

| REV | DATE | BY | DESCRIPTION |
|---|---|---|---|
| F | 10/19/01 | EDA | ADDED VALVE TAG NUMBERS. REVISED LIMESTONE PIPE. DELETED SIGNAL QUANTITY INTO TIMER BOX. |
| E | 10/27/00 | MS | REVISED AS NOTED |
| D | 7-7-00 | SJM | ADDED: INSTRUMENT ROOT VALVE TAG NOS., FEEDER TRIP COMMAND & VALVE STOP COMMAND SIGNALS. |
| C | 12/6/99 | MS | ADDED: VALVE TAGS, ALL TAG NUMBERS & NOTE 5. REVISED: NOTE 3. |
| B | 9-7-99 | RK | ADDED EQUIPT. & DCS'S NEW BMS. REVISED NOTE 3. |
| A | 4-14-99 | RK | INITIAL ISSUE |

REVISIONS

PROCESS & INSTRUMENTATION DIAGRAM
LIMESTONE SYSTEM

JEA
NORTHSIDE UNITS 1 & 2 REPOWERING PROJECT
Equipment No.: N01- & N02
D&W Drawing No.: 62-3/1105 (1470)
CDI Drawing No.: 1

| DRAWING NUMBER | SCALE: NONE | REVISION |
|---|---|---|
| 43-7587-5-6115 | | F |

| | | | |
|---|---|---|---|
| DRAWN BY | RK | 4-1-99 | 200758700 UNIT 2 DOE |
| CHECKED BY | CB | 4-14-99 | 200761000 UNIT 1 JEA |
| APPROVED BY | CB | 4-14-99 | |

THIS DRAWING IS THE PROPERTY OF THE FOSTER WHEELER ENERGY CORPORATION HIGHLAND, N.J.

P062713.62.3401.05-C4019 St:RD 11/17/01 MM-02280

CRA33213 11-SEP-2002 15:32:53

ROTARY VALVE D
DCS MONITORING & CONTROL TAG NUMBERS

| APPLICATION | TAG NUMBER |
|---|---|
| SPEED DEMAND (FC) | 34-SC513 |
| SPEED (ST) | 34-ST512 |
| VALVE ZERO SPEED (SS) | 34-SS511 |
| VALVE START/STOP | NB53-009-CSR |
| VALVE RUNNING | NB53-009-42A |
| VALVE STOPPED | NB53-009-42B |
| VALVE TROUBLE | NB53-009-TBL |
| ASH CONVEYOR COMMAND | 34-SC514 |
| ASH CONVEYOR RUNNING | 53-US615 |

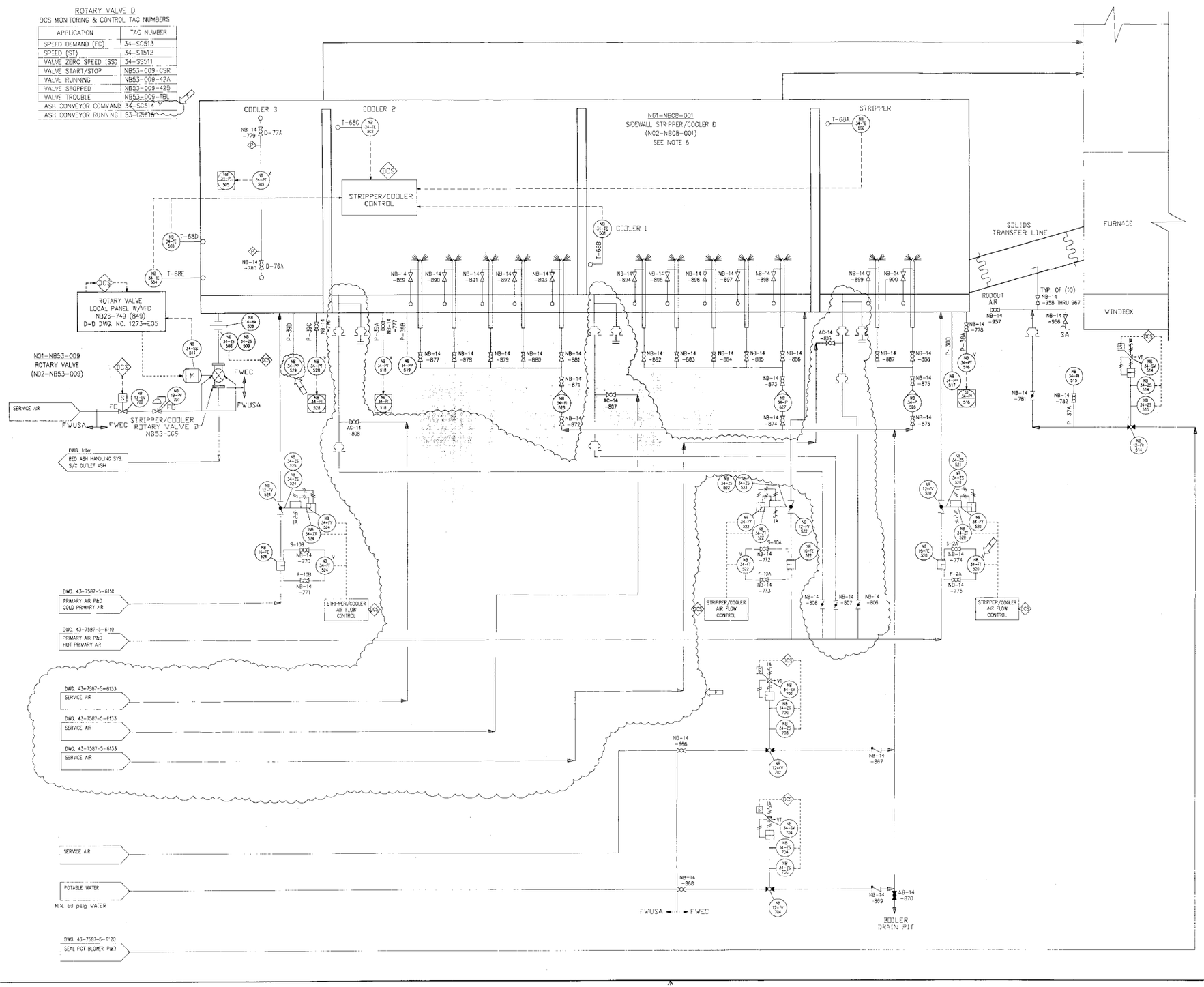


NOTES

1. DO NOT SCALE THIS DRAWING. USE FIGURE DIMENSIONS ONLY.
2. ABBREVIATIONS USED ON THIS DRAWING ARE IN ACCORDANCE WITH AMERICAN STANDARD "ABBREVIATIONS FOR USE ON DRAWING".
3. FOR SYMBOLS AND LEGEND SEE DRAWINGS No. 43-7587-5-6100 AND -6101.
4. ALL INSTRUMENTATION BY FWEC, UNLESS OTHERWISE DESIGNATED BY "V".
5. DISTRIBUTED CONTROL SYSTEM (DCS) FUNCTIONS ARE FURNISHED BY JEA.
6. FOR COOLING WATER COILS SEE DRAWING NUMBER 43-7587-5-6129.

| REV | DATE | BY | DESCRIPTION |
|---|---|---|---|
| F | 10/19/01 | HB | ADDED HOT PA ASSIST LINES. |
| E | 10/27/00 | SJM | REVISED AS NOTED |
| D | 7/7/00 | SJM | REVISED: TAG NUMBERS, REPLACED SOLEVOID VALVES WITH BALL VALVES. ADDED: VALVE LIMIT SWITCHES, NOTE 6 AND VALVE TAG NUMBERS. |
| C | 12-16-99 | VS | DELETED: MANUAL VALVES. ADDED: INSTRUMENTS PT & TP, TABLE, NOTE 5 & ALL TAG NUMBERS. REVISED: DRAWING NUMBERS & NOTE 4. |
| B | 6-7-99 | RK | REDRAWN. |
| A | 4-14-99 | RK | INITIAL ISSUE. |

REVISIONS

PROCESS & INSTRUMENTATION DIAGRAM
SIDEWALL STRIPPER/COOLER D

JEA JACKSONVILLE, FLORIDA
NORTHSIDE UNITS 1 & 2 REPOWERING PROJECT
Equipment No.: N01- & N02-
NEW ERONITIC No.: 52-34105 C4020

| DRAWING NUMBER | SCALE | REVISION |
|---|---|---|
| 43-7587-5-6116 | NONE | F |

| | | | |
|---|---|---|---|
| DRAWN BY | RK | 4-1-99 | 200758700 UNIT 2 DOE |
| CHECKED BY | CB | 4-14-99 | 200761300 UNIT 1 JEA |
| APPROVED BY | CB | 4-14-99 | |

THIS DRAWING IS THE PROPERTY OF THE FOSTER WHEELER ENERGY CORPORATION PERRYVILLE, N.J.

CRA33213 11-SEP-2002 15:32:20

ROTARY VALVE C
DCS MONITORING & CONTROL TAG NUMBERS

| APPLICATION | TAG NUMBER |
|---|---|
| SPEED DEMAND (FC) | 34-SC613 |
| SPEED (ST) | 34-ST612 |
| VALVE ZERO SPEED (SS) | 34-SS611 |
| VALVE START/STOP | NB53-010-CSR |
| VALVE RUNNING | NB53-010-42A |
| VALVE STOPPED | NB53-010-42B |
| VALVE TROUBLE | NB53-010-TBL |
| FOR ASH HANDLING INTERFACE: ASH CONVEYOR DEMAND | 34-SC614 |
| FOR ASH HANDLING INTERFACE: ASH CONVEYOR RUNNING | 34-US614 |

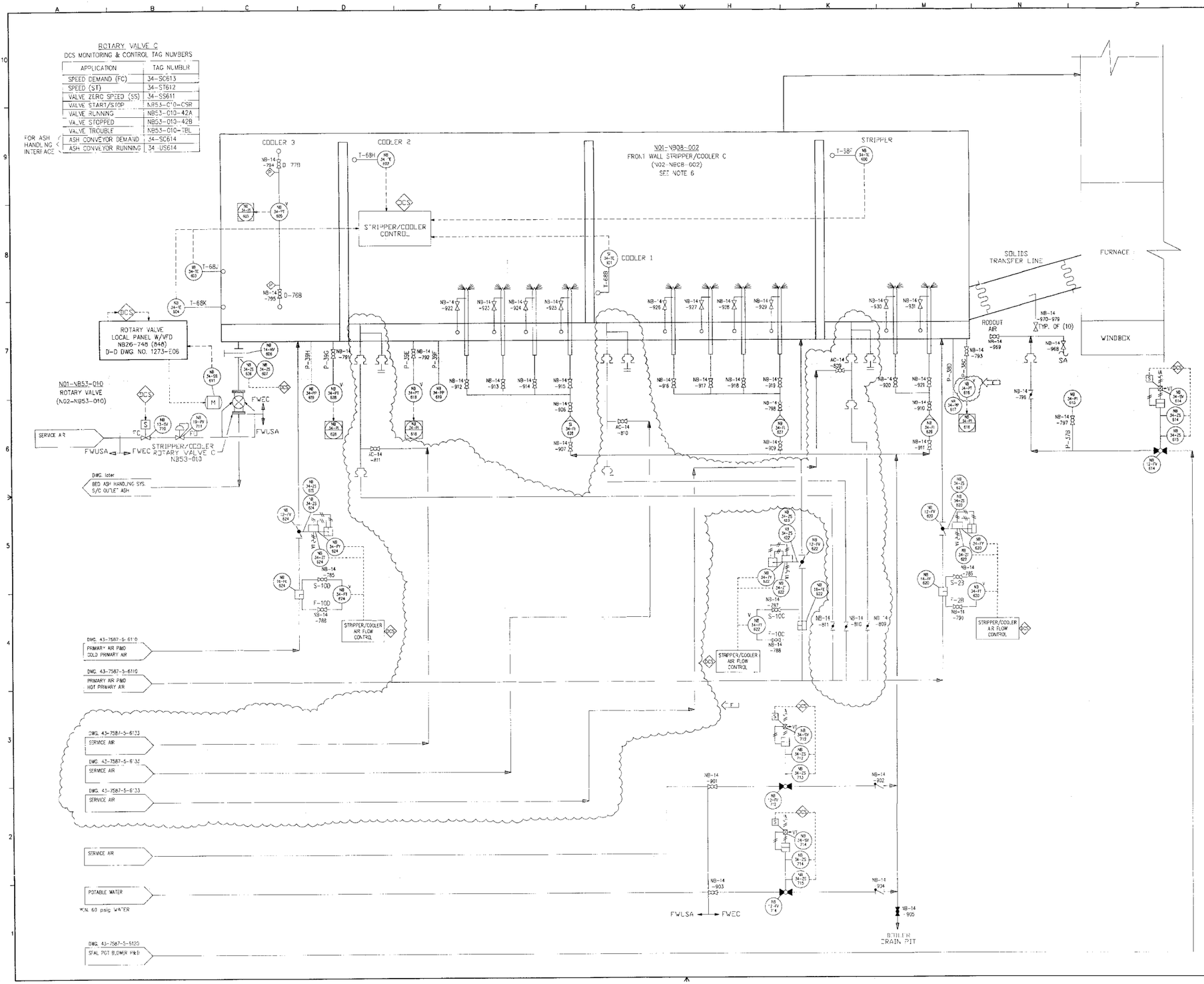


NOTES

1. DO NOT SCALE THIS DRAWING. USE FIGURE DIMENSIONS ONLY.
2. ABBREVIATIONS USED ON THIS DRAWING ARE IN ACCORDANCE WITH AMERICAN STANDARD "ABBREVIATIONS FOR USE ON DRAWING".
3. FOR SYMBOLS AND LEGEND SEE DRAWINGS No. 43-7587-5-6100 AND -6101.
4. ALL INSTRUMENTATION BY FWEC, UNLESS OTHERWISE DESIGNATED BY "V".
5. DISTRIBUTED CONTROL SYSTEM (DCS) FUNCTIONS ARE FURNISHED BY JEA.
6. FOR COOLING WATER COILS SEE DRAWING NUMBER 43-7587-5-6129.

| REV. | DATE | BY | DESCRIPTION |
|---|---|---|---|
| F | 03/19/01 | RN | ADDED HOT PA ASSIST UNITS. |
| E | 10/27/00 | SM | REVISED AS NOTED. |
| D | 7-7-00 | SM | REVISED: TAG NUMBERS, REPLACED SOLENOID VALVES WITH BALL VALVES. ADDED: VALVE LIMIT SWITCHES AND NOTE 6. |
| C | 12-16-99 | WS | DELETED: MANUAL VALVES & SPRAY NOZZLES. ADDED: INSTRUMENTS PT & TP, TABLE, NOTE 5 & ALL TAG NUMBERS. REVISED: DRAWING NUMBERS & NOTE 4. |
| B | 5-7-99 | RK | REDRAWN |
| A | 4-14-99 | RK | INITIAL ISSUE. |

REVISIONS

PROCESS & INSTRUMENTATION DIAGRAM
FRONT WALL STRIPPER/COOLER C

JEA
NORTH-SIDE UNITS 1 & 2 REPOWERING PROJECT
Equipment No.: N01- & N02-
Seal Revision No.: C0 (Original) 0 (JEA)

| DRAWING NUMBER | SCALE | REVISION |
|---|---|---|
| 43-7587-5-6117 | NONE | F |

| | | | |
|---|---|---|---|
| DRAWN BY | RK | 4-1-99 | 200758700 UNIT 2 DOE |
| CHECKED BY | CJ | 4-14-99 | 200761000 UNIT 1 JEA |
| APPROVED BY | CJ | 4-14-99 | |

THIS DRAWING IS THE PROPERTY OF THE
FOSTER WHEELER ENERGY CORPORATION
CLINTON, N.J.

P062713.62.3401.05-C4021 St:RD 11/17/01 MM-02280

CRA33213 11-SEP-2002 15:31:23

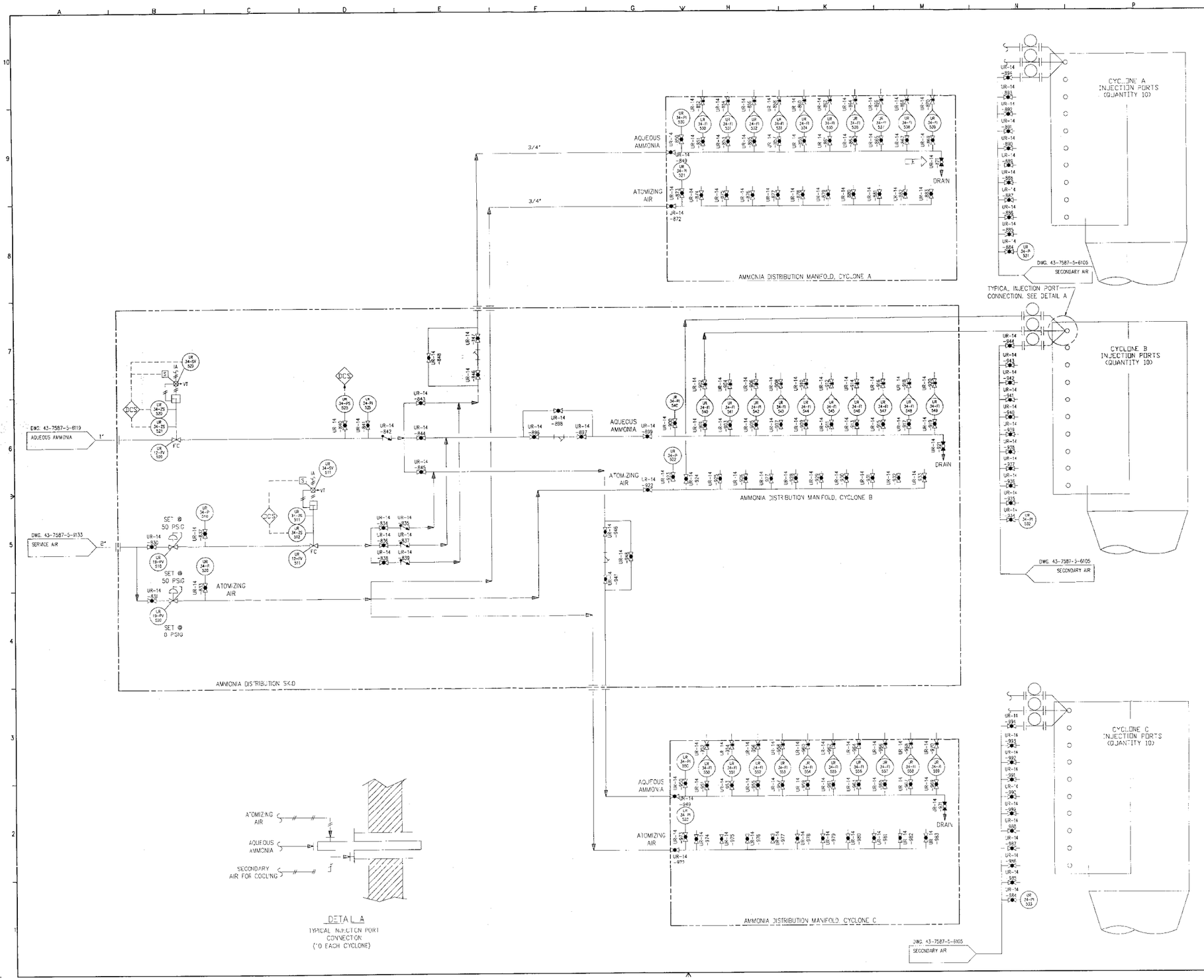


NOTES

1. DO NOT SCALE THIS DRAWING. USE FIGURE DIMENSIONS ONLY.
2. ABBREVIATIONS USED ON THIS DRAWING ARE IN ACCORDANCE WITH AMERICAN STANDARD "ABBREVIATIONS FOR USE ON DRAWING".
3. ALL INSTRUMENTATION BY FWEC, UNLESS OTHERWISE DESIGNATED BY "J".
4. FOR SYMBOLS AND LEGEND SEE DRAWINGS No. 43-7587-5-6100 AND -6101.
5. DRAIN ON RACK IS LOCATED AT LOW POINT IN PIPING. DRAIN TO BE ROUTED TO SEPARATE DRAIN SYSTEM.
6. DISTRIBUTED CONTROL SYSTEM (DCS) FUNCTIONS ARE FURNISHED BY JEA.

| REV | DATE | BY | DESCRIPTION |
|---|---|---|---|
| E | 10/19/01 | RGA | REVISED TAG NUMBER. |
| D | 7-7-00 | SJW | ADDED: INSTRUMENT ROOT VALVE TAGS. DELETED: AQUA AMMONIA FLOW CONTROL VALVE. |
| C | 12-16-99 | WS | ADDED: VALVE TAGS, ALL TAG NUMBERS & NOTE 6. REVISED: NOTE 3 DELETED: POSITION SWITCHES |
| B | 9-7-99 | WS | REDRAWN |
| A | 4-14-99 | RC | INITIAL ISSUE |

REVISIONS

PROCESS & INSTRUMENTATION DIAGRAM
AMMONIA SYSTEM

JEA JACKSONVILLE, FLORIDA

NORTHSIDE UNITS 1 & 2 REPOWERING PROJECT
Equipment No.: NC1- & NC2-
J&V Drawing No.: 62.3401.05-C4022

| DRAWING NUMBER | SCALE: NONE | REVISION |
|---|---|---|
| 43-7587-5-6118 | | E |

| | | | |
|---|---|---|---|
| DRAWN BY | RK | 4-1-99 | 2C07587C0 UNIT 2 DCE |
| CHECKED BY | CB | 4-14-99 | 2C07610C0 UNIT 1 JEA |
| APPROVED BY | CB | 4-14-99 | |

THIS DRAWING IS THE PROPERTY OF THE FOSTER WHEELER ENERGY CORPORATION PERRYVILLE, N.J.

2/3 PLOT 0 1.5" 1" = 1.6"

CRA33213 11-SEP-2002 15:50:34

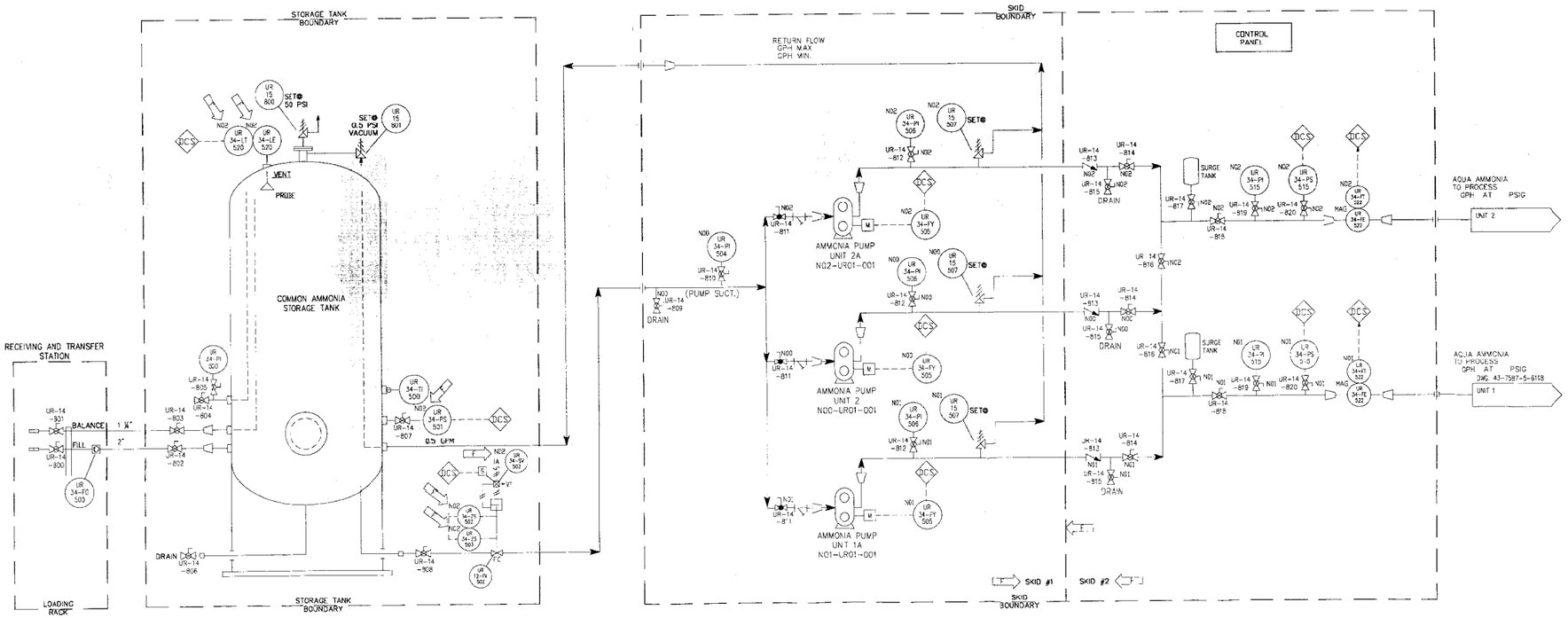


AMMONIA PUMPS (N00, N01, N02)
MONITORING & CONTROL TAG NUMBERS

| APPLICATION | UR01-001 |
|---|---|
| START COMMAND | -CSR |
| RUNNING STATUS | -42A |
| STOPPED STATUS | -42B |

NOTES

1. DO NOT SCALE THIS DRAWING. USE FIGURE DIMENSIONS ONLY.
2. ABBREVIATIONS USED ON THIS DRAWING ARE IN ACCORDANCE WITH AMERICAN STANDARD "ABBREVIATIONS FOR USE ON DRAWING".
3. ALL INSTRUMENTATION BY FWEC, UNLESS OTHERWISE DESIGNATED BY "V".
4. VENT PIPES OF SUFFICIENT LENGTH WILL BE PROVIDED TO AVOID PERSONNEL CONTACT.
5. PIPING PURGE CONNECTION.
6. FOR SYMBOLS AND LEGEND SEE DRAWINGS No. 43-7587-5-6100 AND -6101.
7. ALL EQUIPMENT TAG NUMBERS ARE PREFIXED WITH "N00" FOR NORTH SIDE COMMON EQUIPMENT EXCEPT AS NOTED.
8. DISTRIBUTED CONTROL SYSTEM (DCS) FUNCTIONS ARE FURNISHED BY JEA.

| REV. | DATE | BY | DESCRIPTION |
|---|---|---|---|
| F | 10/19/01 | KGA | ADDED SIGNAL DESTINATION. CLARIFY SKID BOUNDARIES. |
| E | 10/27/00 | SJB | REVISED AS NOTED |
| D | 7/11/00 | TSJM | ADDED & REVISED TAG NUMBERS. MODIFIED AQUA AMMONIA FLOW METERING SCHEME. |
| C | 12/16/99 | WS | REDRAWN |
| B | 9-7-99 | WS | REDRAWN |
| A | 4-4-99 | RK | INITIAL ISSUE |

REVISIONS

PROCESS & INSTRUMENTATION DIAGRAM
AMMONIA SYSTEM

JEA JACKSONVILLE, FLORIDA
NORTHSIDE UNITS 1 & 2 REPOWERING PROJECT
Equipment No. N01- & N02-
J&W Drawing No.: 62.3401.05-C4052

| DRAWING NUMBER | SCALE: NONE | REVISION |
|---|---|---|
| 43-7587-5-6119 | | F |

| | | | |
|---|---|---|---|
| DRAWN BY | RK | 4-1-99 | 200758700 JNL 2 JOE |
| CHECKED BY | JB | 4-14-99 | 200761000 JNL 1 JEA |
| APPROVED BY | JB | 4-14-99 | |

THIS DRAWING IS THE PROPERTY OF THE
FOSTER WHEELER ENERGY CORPORATION
PERRYVILLE, N.J.
We disclaim any and all warranties, including the implied warranties of merchantability and fitness for a particular purpose, with respect to this drawing and the information contained in it. Neither the furnishing of this drawing or any information herein or therein nor any disclosure of any information contained herein or therein shall be construed as granting, by implication or otherwise, any license or rights, whether under patent or not, or any to or against the enforcement of a damages or injunction against the use of any information contained herein or therein in connection with any manufacture, sale or use of equipment.
© 1999 FOSTER WHEELER

2/3 PLOT 0 1.6" 1" = 1.5"

P062713.62.3401.05-C4052 St:RD 11/17/01 MM-02280

CRA33213 11-SEP-2002 15:30:44

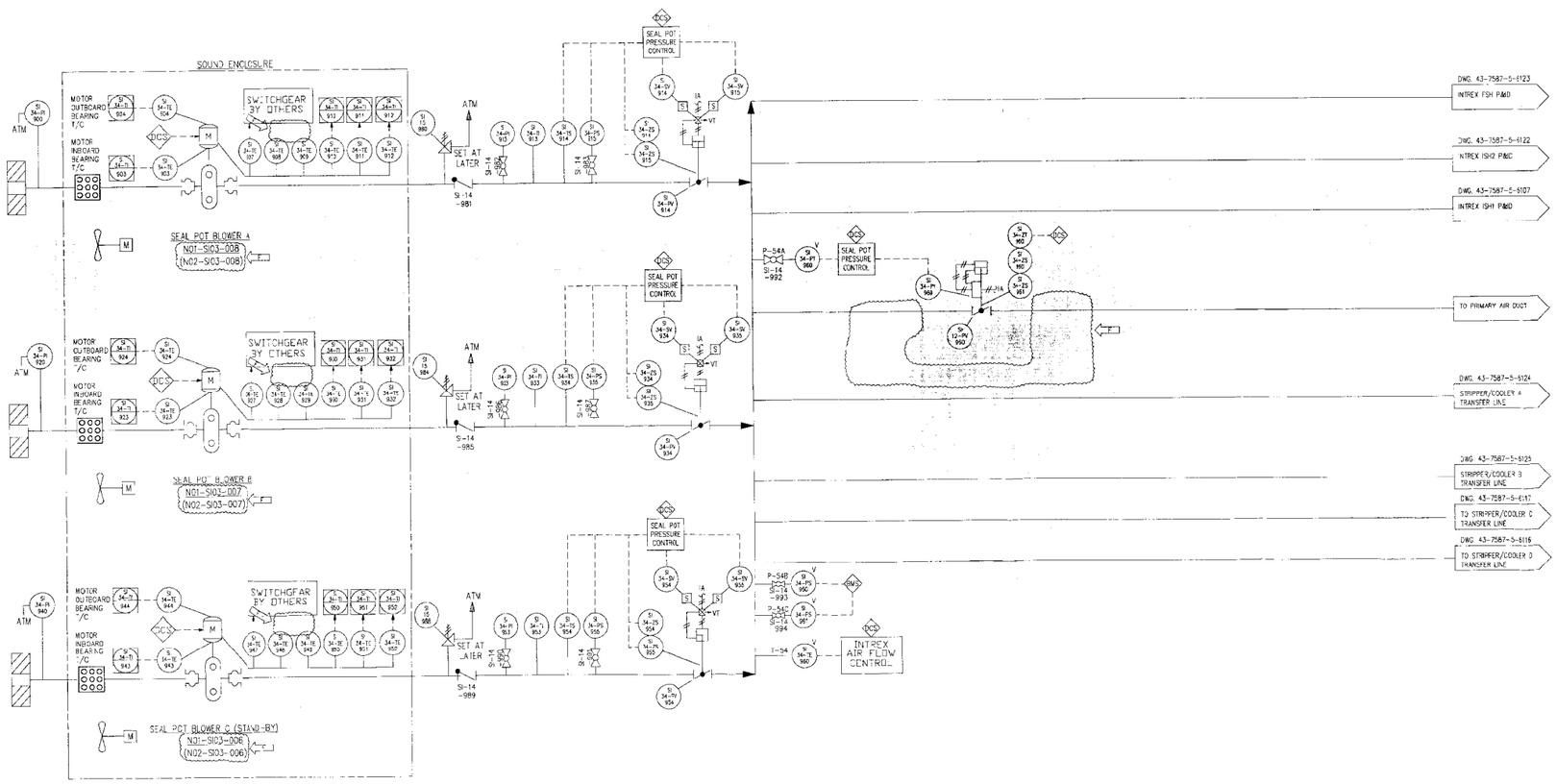


## SEAL POT BLOWERS
MONITORING & CONTROL TAG NUMBERS

| APPLICATION | SC3-006/007/008 |
|---|---|
| START COMMAND | -CCL |
| STOP COMMAND | -COP |
| RUNNING STATUS | -52A |
| STOPPED STATUS | -52B |
| ELECTRICAL TROUBLE | -TBL |
| BREAKER CONNECTED | -52TM |

NOTES

1. DO NOT SCALE THIS DRAWING. USE FIGURE DIMENSIONS ONLY.
2. ABBREVIATIONS USED ON THIS DRAWING ARE IN ACCORDANCE WITH AMERICAN STANDARD "ABBREVIATIONS FOR USE ON DRAWING".
3. ALL INSTRUMENTATION BY FWEC, UNLESS OTHERWISE DESIGNATED BY "X".
4. FOR SYMBOLS AND LEGEND SEE DRAWINGS No. 43-7587-5-6100 AND -6101.
5. DISTRIBUTED CONTROL SYSTEM (DCS) FUNCTIONS ARE FURNISHED BY JEA.

| REV | DATE | BY | DESCRIPTION |
|---|---|---|---|
| F | 3/9/02 | DH | REVISED AS NOTED |
| E | 10/27/00 | MS | REVISED AS NOTED |
| D | 7/7/00 | SJM | ADDED & REVISED TAG NUMBERS REVISED SYSTEM CODES. |
| C | 12/16/99 | NG | ADDED: INSTRUMENT TAGS & NOTES 3 & 6. REVISED: NOTE 3. |
| B | 9/7/99 | MS | MOVED CYCLONES TO NEW DWG. -6128 RELOCATED CHECK VALVES, AIR FLOW CONTROL AND SEAL POT PRESSURE CONTROL. REVISED NOTE 3. |
| A | 4/14/99 | RK | INITIAL ISSUE. |

REVISIONS

PROCESS & INSTRUMENTATION DIAGRAM
SEAL POT
BLOWER SYSTEMS

JEA
NORTH-SIDE UNITS 1 & 2 REPOWERING PROJECT
Equipment No. N01- & N02-
SWA Drawing No: 69 347 05 C4024

| DRAWING NUMBER | SCALE: NONE | REVISION |
|---|---|---|
| 43-7587-5-6120 | | F |

| | | | |
|---|---|---|---|
| DRAWN BY | RK | 4-12-99 | 230758700 UNIT 2 DDE |
| CHECKED BY | CB | 4-14-99 | 230781000 UNIT 1 JEA |
| APPROVED BY | CB | 4-14-99 | |

THIS DRAWING IS THE PROPERTY OF THE
FOSTER WHEELER ENERGY CORPORATION
PLAINFIELD, N.J.

THIS DOCUMENT AND ITS DISCLOSURE, INCLUDING THE INFORMATION ATTACHED OR REPRESENTED HEREON, IS THE PROPERTY OF FOSTER WHEELER ENERGY CORPORATION. IT IS LOANED TO THE RECIPIENT FOR REFERENCE, WITHOUT ALLOWANCE OR PAYMENT. IT IS SUBJECT TO RECALL AT ANY TIME. THE INFORMATION HEREON MAY BE DISCLOSED ONLY TO THOSE EMPLOYEES WITH A VALID NEED TO KNOW. THE RECIPIENT AGREES TO MAINTAIN THE INFORMATION HEREON IN CONFIDENCE AND TO PROTECT IT FROM DISCLOSURE TO THOSE OUTSIDE THE RECIPIENT'S ORGANIZATION. THE RECIPIENT AGREES TO NOT USE THE INFORMATION HEREON FOR ANY PURPOSE OTHER THAN THE PURPOSE FOR WHICH IT IS LOANED. THE RECIPIENT AGREES TO INDEMNIFY AND HOLD FOSTER WHEELER HARMLESS FOR ANY DAMAGES OR LOSSES RESULTING FROM THE USE OF THE INFORMATION HEREON.
© FW CORP.

2/3 PLOT 0 1.5" 1" = 1.5"

P062713.62.3401.05-C4024 St:RD 11/17/01 MM-02280

CRA33213 11-SEP-2002 15:50:02

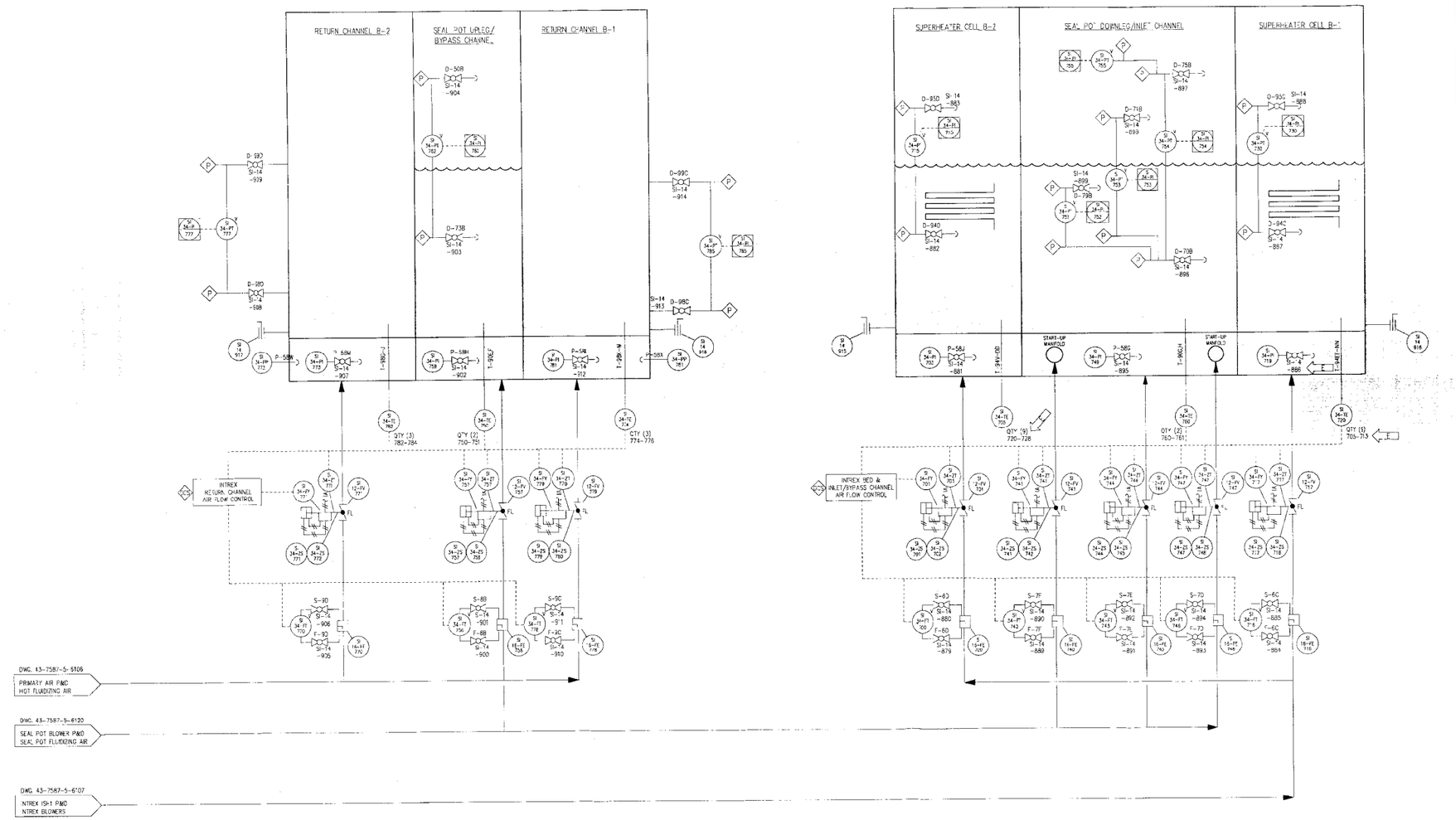


NOTES

1. DO NOT SCALE THIS DRAWING. USE FIGURE DIMENSIONS ONLY.
2. ABBREVIATIONS USED ON THIS DRAWING ARE IN ACCORDANCE WITH AMERICAN STANDARD "ABBREVIATIONS FOR USE ON DRAWING".
3. FOR SYMBOLS AND LEGEND SEE DRAWINGS No. 43-7587-5-6100 AND -6101.
4. ALL INSTRUMENTATION BY FWEC, UNLESS OTHERWISE DESIGNATED BY "V".
5. ALL EQUIPMENT/SYSTEM CODES ARE "RB" FOR "BOILER - STEAM GENERATOR SECTION" UNLESS OTHERWISE NOTED.
6. DISTRIBUTED CONTROL SYSTEM (DCS) FUNCTIONS ARE FURNISHED BY JEA.

| REV | DATE | DR. INIT. | DESCRIPTION |
|---|---|---|---|
| E | 10/19/01 | EGA | REVISED VALVE TAG NUMBER. REVISED CUSTOMER TAG NUMBERS. |
| D | 10/27/00 | MS | REVISED AS NOTED |
| C | 7/7/00 | SJM | ADDED INSTRUMENT VALVE TAG NUMBERS. REVISED EQUIPMENT & INSTRUMENT SYSTEM CODE FROM "BR" TO "SI" & THERMOCOUPLE CONNECTION TAGS. |
| B | 12/16/99 | NJG | ADDED ALL TAG NUMBERS & NOTES 5 & 6 REVISED NOTE 4 |
| A | 9-7-99 | MS | INITIAL ISSUE |

REVISIONS

PROCESS & INSTRUMENTATION DIAGRAM
INTREX "B"
INTERMEDIATE SUPERHEATER 2

JEA JACKSONVILLE ELECTRIC

NORTHSIDE UNITS 1 & 2 REPOWERING PROJECT
Equipment No.: N01- & N02-
(E&C Drawing No.: GF-340805-C4053)

| DRAWING NUMBER | SCALE: NONE | REVISION: |
|---|---|---|
| 43-7587-5-6122 | | E |

| | | | |
|---|---|---|---|
| DRAWN BY | MS | 6-28-99 | 20070587G0 UNIT 2 DCE |
| CHECKED BY | JTD | 9-3-99 | 20070610G0 UNIT 1 JEA |
| APPROVED BY | JTD | 9-3-99 | |

THIS DRAWING IS THE PROPERTY OF THE
FOSTER WHEELER ENERGY CORPORATION
CLARKSBURG, N.J.
The equipment and any information including but proprietary contained or represented on or in this drawing is the property of Foster Wheeler Energy Corporation. It is to be used only for the purpose for which it is intended in connection with the execution of the contract under which it was loaned or otherwise provided to the recipient or user. Proprietary information shall not be reproduced, copied, lent or disclosed, directly or indirectly, nor used for any purpose other than that for which it was furnished without the prior written consent of Foster Wheeler Energy Corporation.

P062713.62.3401.05-C4053 St:RD 11/17/01 MM-02280

CRA33213 11-SEP-2002 15:49:27

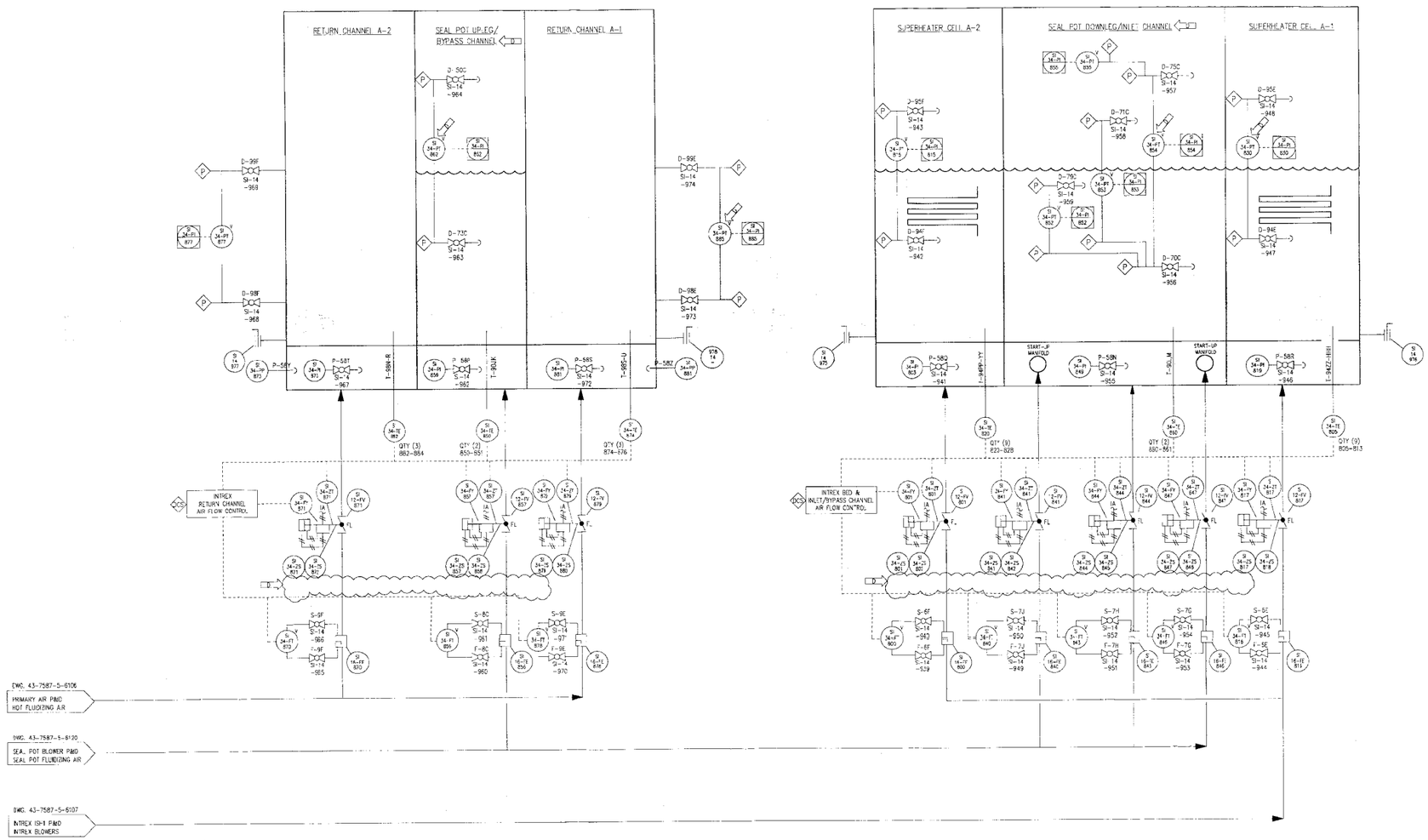


NOTES

1. DO NOT SCALE THIS DRAWING. USE FIGURE DIMENSIONS ONLY.
2. ABBREVIATIONS USED ON THIS DRAWING ARE IN ACCORDANCE WITH AMERICAN STANDARD "ABBREVIATIONS FOR USE ON DRAWING".
3. FOR SYMBOLS AND LEGEND SEE DRAWINGS No. 43-7587-5-6100 AND -6101.
4. ALL INSTRUMENTATION BY FWEC, UNLESS OTHERWISE DESIGNATED BY "V".
5. ALL EQUIPMENT/SYSTEM CODES ARE "BR" FOR "BOILER - STEAM GENERATOR SECTION" UNLESS OTHERWISE NOTED.
6. DISTRIBUTED CONTROL SYSTEM (DCS) FUNCTIONS ARE FURNISHED BY JEA.

| REV. | DATE | BY | DESCRIPTION |
|---|---|---|---|
| D | 10/27/00 | WS | REVISED AS NOTED |
| C | 7/7/00 | SAN | ADDED:INSTRUMENT VALVE TAG NUMBERS. REVISED: THERMOCOUPLE CONNECTION TAGS. |
| B | 12/16/99 | WS | ADDED: ALL TAG NUMBERS & NOTES 5 & 6. REVISED: NOTE 4 |
| A | 9-7-99 | WS | INITIAL ISSUE |

REVISIONS

PROCESS & INSTRUMENTATION DIAGRAM
INTREX "A"
FINISHING SUPERHEATER

NORTHSIDE UNITS 1 & 2 REPOWERING PROJECT
Equipment No.: NOI- & NRI-
B&V Drawing No.: 62-3401.05-C4354

JEA

| DRAWING NUMBER | SCALE | REVISION |
|---|---|---|
| 43-7587-5-6123 | NONE | D |

| | | | |
|---|---|---|---|
| DRAWN BY | WS | 6-28-99 | 209758700 UNIT 2 DCS |
| CHECKED BY | JTD | 9-3-99 | 209761300 UNIT 1 JEA |
| APPROVED BY | JTD | 9-3-99 | |

FOSTER WHEELER ENERGY CORPORATION
PERRYVILLE, N.J.

P062713.62.3401.05-C4054 St:RD 11/17/01 MM-02280

CRA33213 11-SEP-2002 15:48:49

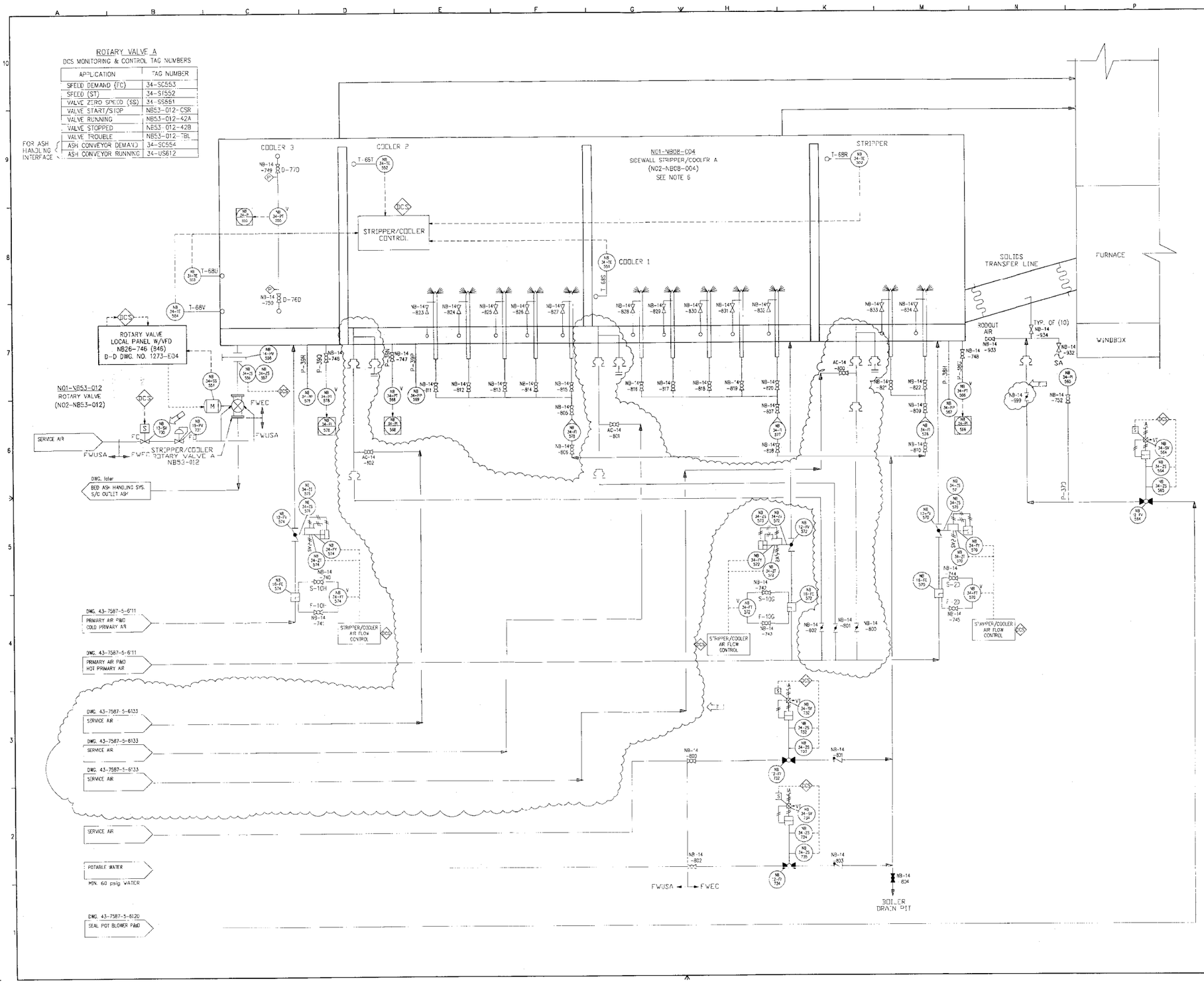


NOTES

1. DO NOT SCALE THIS DRAWING. USE FIGURE DIMENSIONS ONLY.
2. ABBREVIATIONS USED ON THIS DRAWING ARE IN ACCORDANCE WITH AMERICAN STANDARD "ABBREVIATIONS FOR USE ON DRAWING".
3. FOR SYMBOLS AND LEGEND SEE DRAWINGS No. 43-7587-5-6100 AND -6101.
4. ALL INSTRUMENTATION BY FWEC UNLESS OTHERWISE DESIGNATED BY "V".
5. DISTRIBUTED CONTROL SYSTEM (DCS) FUNCTIONS ARE FURNISHED BY JEA.
6. FOR COOLING WATER COILS SEE DRAWING NUMBER 43-7587-5-6129.

| REV | DATE | BY | DESCRIPTION |
|---|---|---|---|
| F | 10/19/01 | PK | ADDED PA ASSIST LINES AND VALVE TAG NUMBERS. |
| E | 3/8/01 | DH | REVISED AS NOTED |
| D | 10/27/00 | SJM | REVISED AS NOTED |
| C | 7/7/00 | SJM | REVISED: TAG NUMBERS. REPLACED SOLENOID VALVES WITH BALL VALVES. ADDED: VALVE LIMIT SWITCHES AND NOTE 5. |
| B | 12/16/99 | MS | DELETED: MANUAL VALVES. ADDED: INSTRUMENTS PT & TT, TABLE, NOTE 5 & ALL TAG NUMBERS. REVISED: DRAWING NUMBERS & NOTE 4. |
| A | 9/7/99 | SJM | INITIAL ISSUE. |

REVISIONS

PROCESS & INSTRUMENTATION DIAGRAM
SIDEWALL STRIPPER/COOLER A

JEA
NORTHSIDE UNITS 1 & 2 REPOWERING PROJECT
Equipment No.: N01- & N02-
JEA DRAWING No.: 62.3401.05-C4255

| DRAWING NUMBER | SCALE: NONE | REVISION |
|---|---|---|
| 43-7587-5-6124 | | F |

| | | |
|---|---|---|
| DRAWN BY | MS | 7-28-99 |
| CHECKED BY | JTD | 9-3-99 |
| APPROVED BY | JTD | 9-3-99 |

2001/98700 UNIT 2 DCS
2001/8700 UNIT 1 JEA

THIS DRAWING IS THE PROPERTY OF THE FOSTER WHEELER ENERGY CORPORATION, ROSELLE, N.J.

© 1999 FOSTER WHEELER

P062713.62.3401.05-C4055 St:RD 11/17/01 MM-02280

CRA33213 11-SEP-2002 15:48:18

ROTARY VALVE B
DCS MONITORING & CONTROL TAG NUMBERS

| | APPLICATION | TAG NUMBER |
|---|---|---|
| | SPEED DEMAND (FC) | 34-SC663 |
| | SPEED (ST) | 34-ST662 |
| | VALVE ZERO SPEED (SS) | 34-SS661 |
| | VALVE START/STOP | NB53-011-CSH |
| | VALVE RUNNING | NB53-011-42A |
| | VALVE STOPPED | NB53-011-42B |
| | VALVE TROUBLE | NB53-011-TBL |
| FOR ASH HANDLING INTERFACE | ASH CONVEYOR DEMAND | 34-SC664 |
| | ASH CONVEYOR RUNNING | 34-US613 |

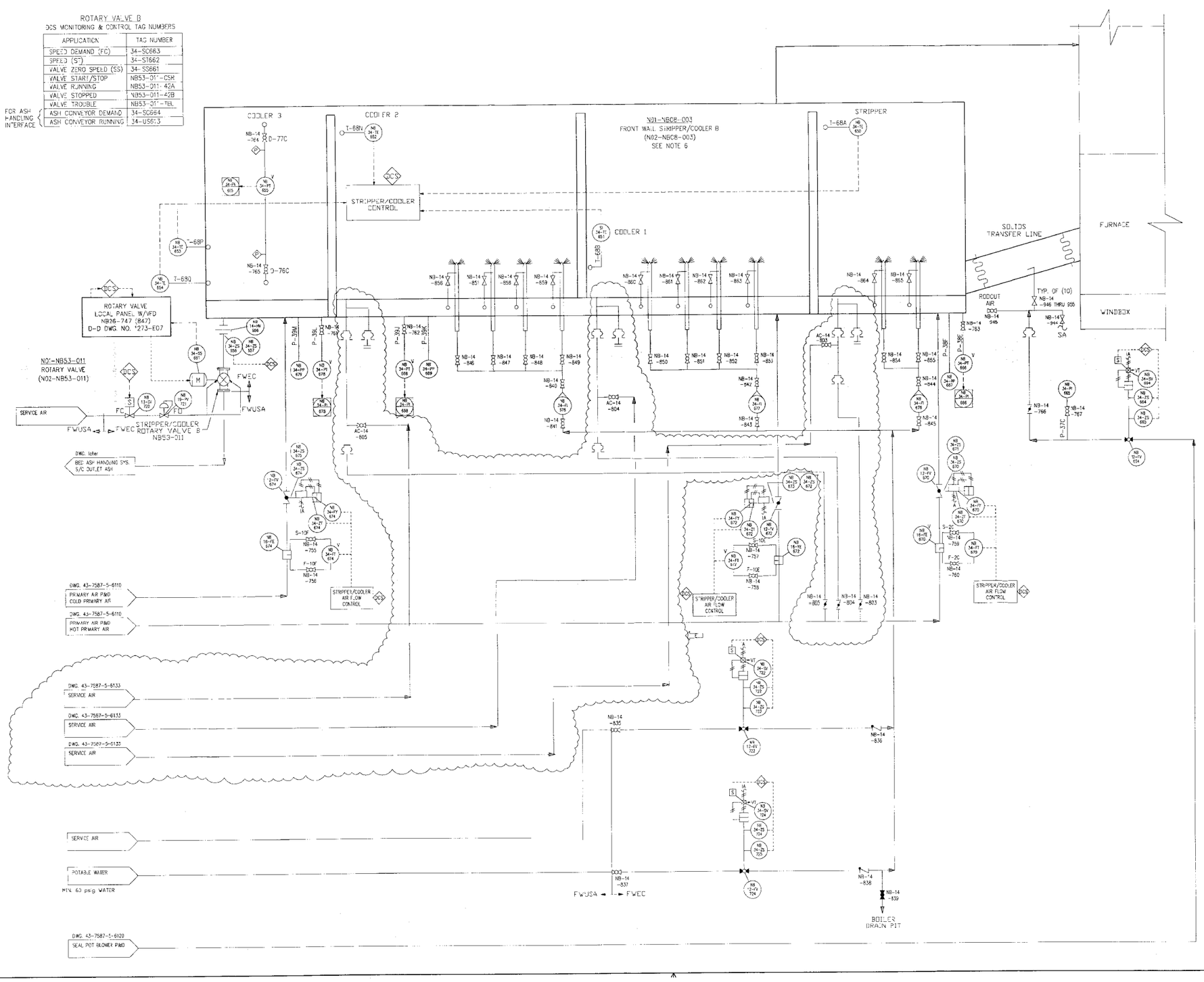


NOTES

1. DO NOT SCALE THIS DRAWING. USE FIGURE DIMENSIONS ONLY.
2. ABBREVIATIONS USED ON THIS DRAWING ARE IN ACCORDANCE WITH AMERICAN STANDARD "ABBREVIATIONS FOR USE ON DRAWING".
3. FOR SYMBOLS AND LEGEND SEE DRAWINGS No. 43-7587-5-6100 AND - 6101.
4. ALL INSTRUMENTATION BY FWEC, UNLESS OTHERWISE DESIGNATED BY "V".
5. DISTRIBUTED CONTROL SYSTEM (DCS) FUNCTIONS ARE FURNISHED BY JEA.
6. FOR COOLING WATER COILS SEE DRAWING NUMBER 43-7587-5-6129.

| REV. | DATE | BY | DESCRIPTION |
|---|---|---|---|
| E | 10/19/01 | RN | ADDED PA ASSIST LINES. REVISED VALVE TAG NUMBERS. |
| D | 10/27/00 | MS | REVISED AS NOTED |
| C | 7/7/00 | SJM | REVISED: TAG NUMBERS, REPLACED SOLENOID VALVES WITH BALL VALVES. ADDED: VALVE LIMIT SWITCHES, NOTE 6 AND VALVE TAG NUMBERS. |
| B | 12/16/99 | MS | DELETED: MANUAL VALVES & SPRAY NOZZLES. ADDED: INSTRUMENTS PT & "P", TABLE, NOTE 5 & ALL TAG NUMBERS. REVISED: DRAWING NUMBERS & NOTE 4. |
| A | 9-7-99 | SJM | INITIAL ISSUE. |

REVISIONS

PROCESS & INSTRUMENTATION DIAGRAM
FRONT WALL STRIPPER/COOLER B

JEA
NORTHSIDE UNITS 1 & 2 REPOWERING PROJECT
Equipment No.: N01- & N02-

| DRAWING NUMBER | SCALE | REVISION |
|---|---|---|
| 43-7587-5-6125 | NONE | E |

| | | | |
|---|---|---|---|
| DRAWN BY | MS | 7-28-99 | 2GC758700 UNIT 2 CGE |
| CHECKED BY | JTD | 9-3-99 | 2GC761000 UNIT 1 JEA |
| APPROVED BY | JTD | 9-3-99 | |

THIS DRAWING IS THE PROPERTY OF THE
FOSTER WHEELER ENERGY CORPORATION
PROPRIETARY

CRA33213 11-SEP-2002 15:47:39

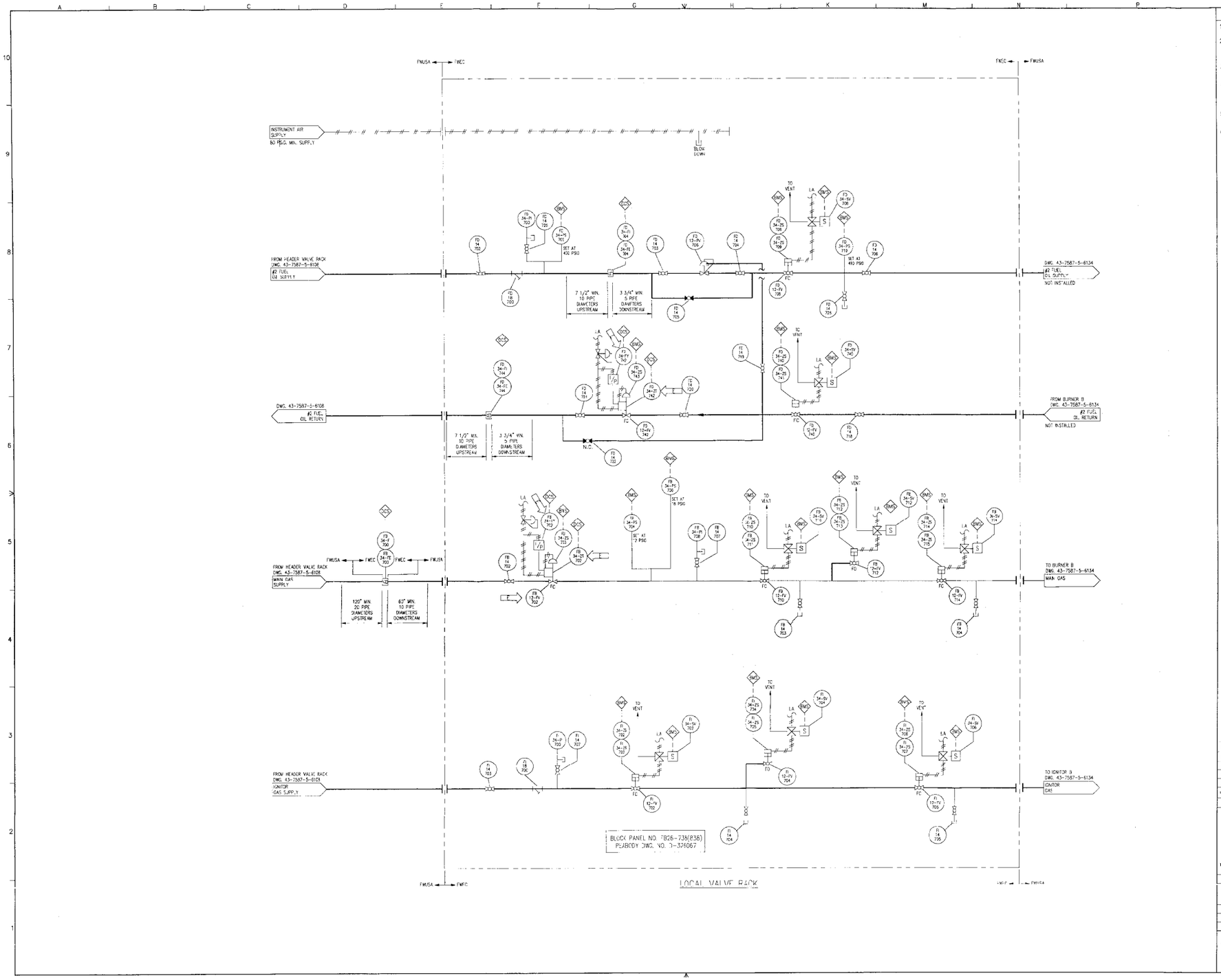


NOTES

1. DO NOT SCALE THIS DRAWING. USE FIGURE DIMENSIONS ONLY.
2. ABBREVIATIONS USED ON THIS DRAWING ARE IN ACCORDANCE WITH AMERICAN STANDARD "ABBREVIATIONS FOR USE ON DRAWING".
3. FOR SYMBOLS AND LEGEND SEE DRAWINGS No. 43-7587-5-6100 AND -6101.
4. THE ELBOW BURNER RACK MUST BE LOCATED AS CLOSE TO THE BURNER AS POSSIBLE TO FACILITATE PROPER BURNER LIGHTOFF.
5. ALL INSTRUMENTATION BY FWEC, UNLESS OTHERWISE DESIGNATED BY "V".
6. GAS FLOW METER AND ALL EQUIPMENT ON RACKS SUPPLIED BY PEABODY ENGINEERING.

| REV | DATE | BY | DESCRIPTION |
|---|---|---|---|
| E | 12/19/00 | EGA | ADDED CUSTOMER TAG NUMBER |
| D | 10/17/00 | MS | REVISED AS NOTED |
| C | 7/28/00 | SJM | MLVS,LD AND HUBMANN |
| B | 12-6-99 | MS | ADDED: NOTES 6 & 7 & HOLD |
| A | 5-7-99 | MS | IN RAL ISSUE |

REVISIONS

PROCESS & INSTRUMENTATION DIAGRAM
ELBOW DUCT BURNER B

JEA
NORTHSIDE UNITS 1 & 2 REPOWERING PROJECT
Equipment No.: N01- & N02-
B&W Drawing No.: 62.3401.05-C4057

| DRAWING NUMBER | SCALE | NONE |
|---|---|---|
| 43-7587-5-6126 | REVISION | E |

| | | | |
|---|---|---|---|
| DRAWN BY | MS | 8-2-99 | 200158/00 UNIT 2 DCC |
| CHECKED BY | JTD | 9-3-99 | 200751 C00 UNIT 1 JEA |
| APPROVED BY | JTD | 9-3-99 | |

THIS DRAWING IS THE PROPERTY OF THE FOSTER WHEELER ENERGY CORPORATION TURNKEY - N.J.

CRA33213 11-SEP-2002 15:47:10

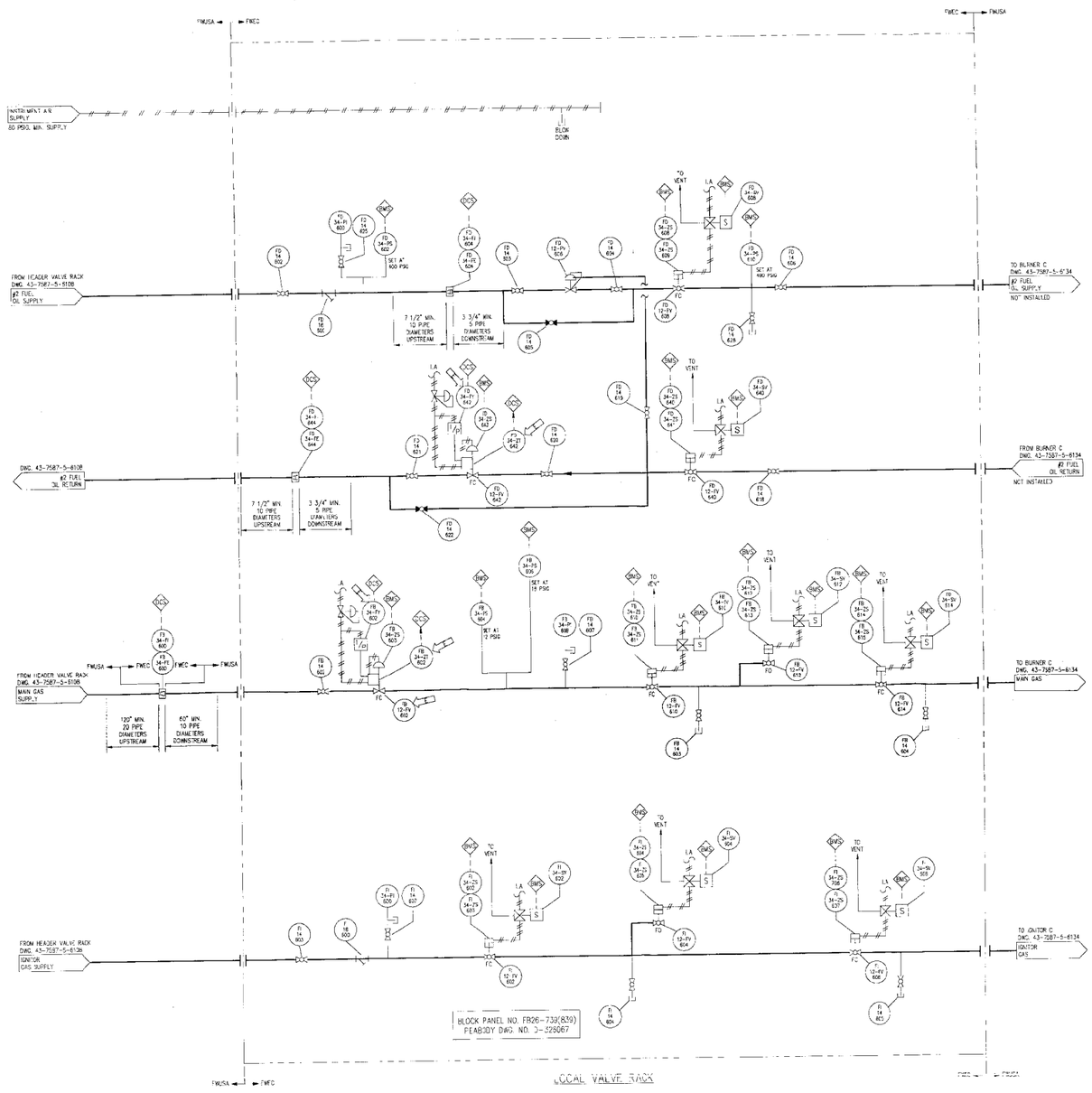


NOTES

1. DO NOT SCALE THIS DRAWING. USE FIGURE DIMENSIONS ONLY.
2. ABBREVIATIONS USED ON THIS DRAWING ARE IN ACCORDANCE WITH AMERICAN STANDARD "ABBREVIATIONS FOR USE ON DRAWING".
3. FOR SYMBOLS AND LEGEND SEE DRAWINGS No. 43-7587-5-6100 AND -6101.
4. THE ELBOW BURNER RACK MUST BE LOCATED AS CLOSE TO THE BURNER AS POSSIBLE TO FACILITATE PROPER BURNER LIGHT-OFF.
5. DISTRIBUTED CONTROL SYSTEM (DCS) FUNCTIONS ARE FURNISHED BY JEA.
6. GAS FLOW METER AND ALL EQUIPMENT ON RACKS SUPPLIED BY PEABODY ENGINEERING.

| REV. | DATE | BY | DESCRIPTION |
|---|---|---|---|
| E | 10/19/01 | MS | ADDED CUSTOMER TAG NUMBERS |
| D | 12/27/00 | MS | REVISED AS NOTED |
| C | 7/25/00 | S.V | REVISED AND REDRAWN |
| B | 12-16-99 | MS | ADDED: NOTES 6 & 7 & FOLD. |
| A | 9-7-99 | MS | INITIAL ISSUE. |

REVISIONS

PROCESS & INSTRUMENTATION DIAGRAM
ELBOW DUCT BURNER C

JEA
NORTH SIDE UNITS 1 & 2 REPOWERING PROJECT
Equipment No.: N01- & N02-
B&V Drawing No.: 32.3401.05-C4058

| DRAWING NUMBER | SCALE: NONE | |
|---|---|---|
| 43-7587-5-6127 | | E |
| DRAWN BY: MS | 8-2-99 | 20078730 UNIT 2 DCS |
| CHECKED BY: JTD | 9-3-99 | 20078100 UNIT 1 JEA |
| APPROVED BY: JTD | 9-3-99 | |

THIS DRAWING IS THE PROPERTY OF THE
FOSTER WHEELER ENERGY CORPORATION
CLINTON, N.J.

P062713.62.3401.05-C4058 St:RD 11/17/01 MM-02280

CRA33213 11-SEP-2002 15:45:30

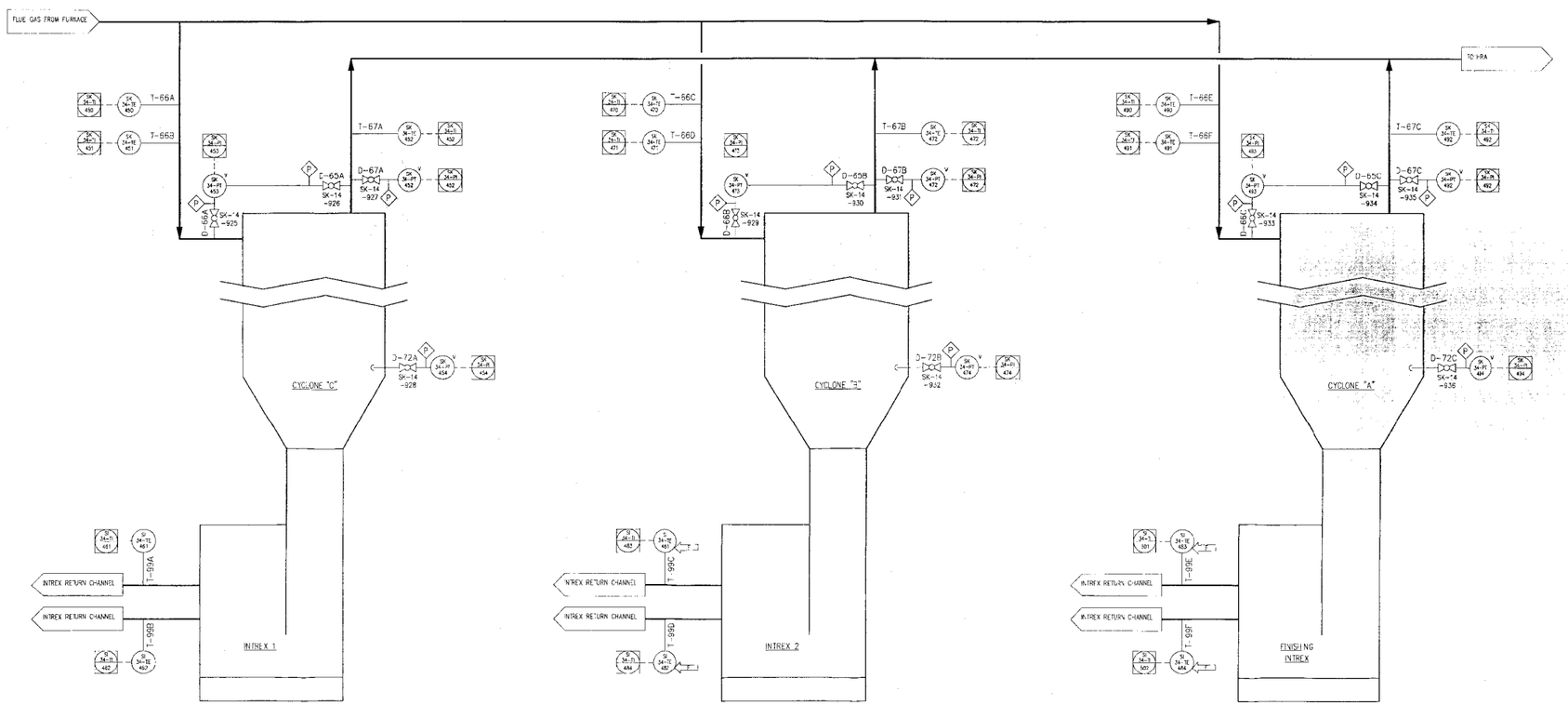


NOTES

1. DO NOT SCALE THIS DRAWING. USE FIGURE DIMENSIONS ONLY.
2. ABBREVIATIONS USED ON THIS DRAWING ARE IN ACCORDANCE WITH AMERICAN STANDARD "ABBREVATIONS FOR USE ON DRAWING".
3. ALL INSTRUMENTATION BY FWEC, UNLESS OTHERWISE DESIGNATED BY "V".
4. FOR SYMBOLS AND LEGEND SEE DRAWINGS No. 43-7587-5-6100 AND -6101.
5. DISTRIBUTED CONTROL SYSTEM (DCS) FUNCTIONS ARE FURNISHED BY JEA.

| REV. | DATE | BY | DESCRIPTION |
|---|---|---|---|
| F | 10/19/01 | MS | REVISED CUSTOMER TAG NUMBERS |
| E | 3/8/01 | DH | REVISED AS NOTED |
| D | 10/27/00 | MS | REVISED AS NOTED |
| C | 7/7/00 | SJM | ADDED INSTRUMENT ROOT VALVE TAG NUMBERS. REPLACED EQUIPMENT SYSTEM CODE "88" WITH "04" & "05" FOR CYCLONE & INTREX SYSTEMS RESPECTIVELY. |
| B | 12/16/99 | MS | ADDED: ALL TAG NUMBERS & NOTE 5. REVISED: NOTE 3 DELETED: INTREX INSTRUMENTS |
| A | 9/7/99 | MS | INITIAL ISSUE |

REVISIONS

PROCESS & INSTRUMENTATION DIAGRAM
CYCLONES

NORTHSIDE UNITS 1 & 2 REPOWERING PROJECT
Equipment No. 1-2 & 1-2
FWV Drawing No. 52-3420-05-C4059

| DRAWING NUMBER | SCALE: | REVISION |
|---|---|---|
| 43-7587-5-6128 | NONE | F |

| | | | |
|---|---|---|---|
| DRAWN BY | MS | 8-17-99 | 200758700 UNIT 2 DOC |
| CHECKED BY | JTD | 9-3-99 | 200757000 UNIT 1 JEA |
| APPROVED BY | JTD | 9-3-99 | |

THIS DRAWING IS THE PROPERTY OF THE FOSTER WHEELER ENERGY CORPORATION

2/3 PLOT 0 1.5" 1" = 1.5"

P062713.62.3401.05-C4059 St:RD 11/17/01 MM-02280

CRA33213 11-SEP-2002 15:44:32

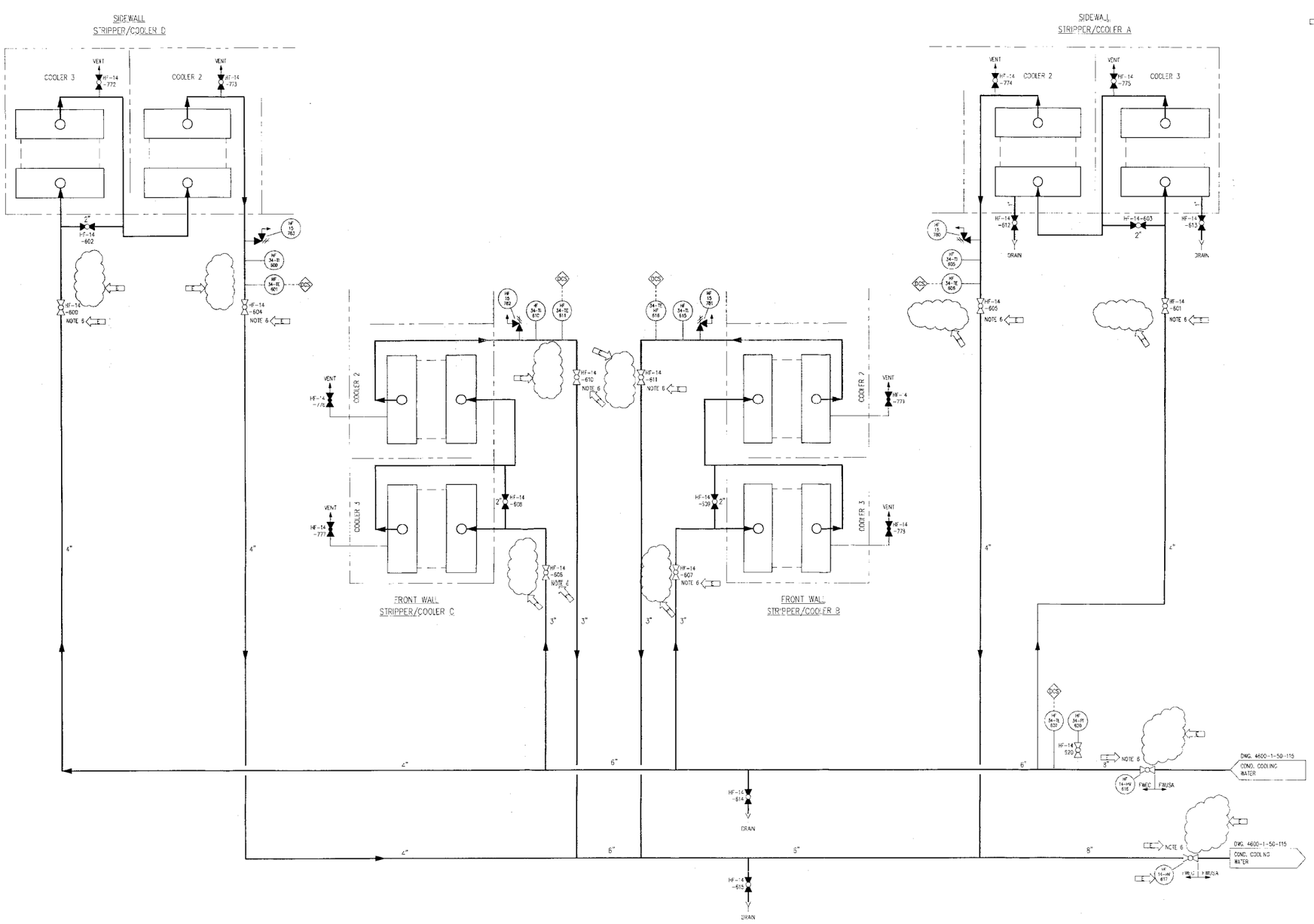


NOTES

1. DO NOT SCALE THIS DRAWING. USE FIGURE DIMENSIONS ONLY.
2. ABBREVIATIONS USED ON THIS DRAWING ARE IN ACCORDANCE WITH AMERICAN STANDARD "ABBREVIATIONS FOR USE ON DRAWING".
3. FOR SYMBOLS AND LEGEND SEE DRAWINGS No. 43-7587-5-6100 AND -6101.
4. ALL INSTRUMENTATION BY FWEC, UNLESS OTHERWISE DESIGNATED BY "V".
5. DISTRIBUTED CONTROL SYSTEM (DCS) FUNCTIONS ARE FURNISHED BY JEA.
6. VALVES TO BE LOCKED OPEN.

| REV. | DATE | BY | DESCRIPTION |
|---|---|---|---|
| E | 10/19/01 | MS | ADDED NOTE 6. REVISED VALVE TAG NUMBERS. DELETED LIMIT SWITCHES FROM VALVES. |
| D | 3-9-01 | RK | REVISED AS NOTED |
| C | 10-27-00 | MS | REVISED AS NOTED |
| B | 7-5-00 | MT | ADDED INSTRUMENT TAG NUMBERS. |
| A | 3-13-00 | MS | INITIAL ISSUE. |

REVISIONS

PROCESS & INSTRUMENTATION DIAGRAM
STRIPPER/COOLERS
CONDENSATE COOLING WATER

JEA JACKSONVILLE, FLORIDA

NORTHSIDE UNITS 1 & 2 REPOWERING PROJECT
PROJECT NO. NRT- & NRP-
SBW Drawing No.: 62-340125-C4149

| DRAWING NUMBER | SCALE | REVISION |
|---|---|---|
| 43-7587-5-6129 | NONE | E |

| | | | |
|---|---|---|---|
| DRAWN BY | MS | 3-9-00 | 200758700 UNIT 2 ODE |
| CHECKED BY | JTD | 3-13-00 | 200761000 UNIT 1 JEA |
| APPROVED BY | JTD | 3-13-00 | |

THIS DRAWING IS THE PROPERTY OF THE
FOSTER WHEELER ENERGY CORPORATION
PERRYVILLE, N.J.

CRA33213 11-SEP-2002 15:43:03

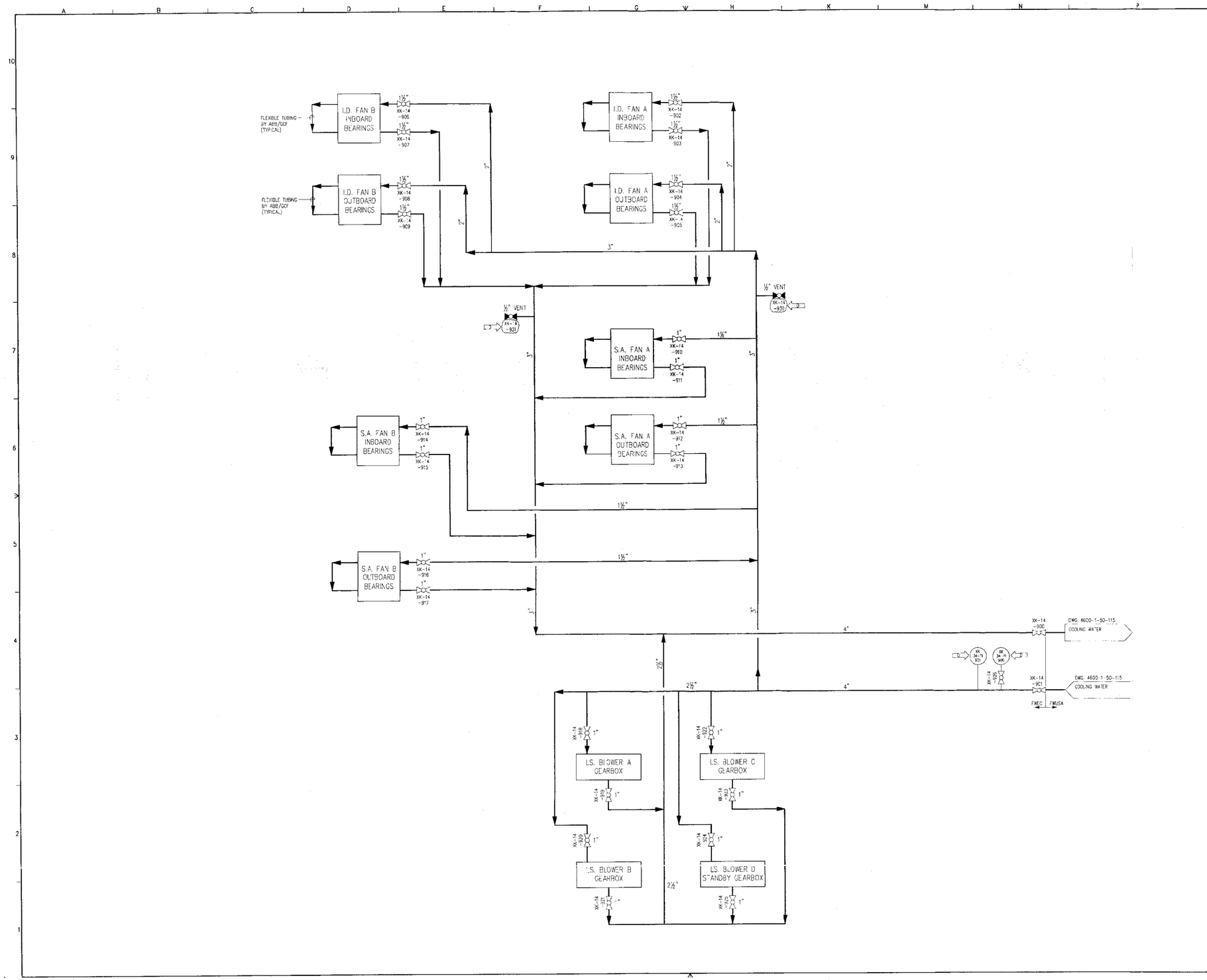


NOTES

1. DO NOT SCALE THIS DRAWING. USE FIGURE DIMENSIONS ONLY.
2. ABBREVIATIONS USED ON THIS DRAWING ARE IN ACCORDANCE WITH AMERICAN STANDARD "ABBREVIATIONS FOR USE ON DRAWING".
3. FOR SYMBOLS AND LEGEND SEE DRAWINGS No. 43-7587-5-6100 AND -6101.
4. ALL INSTRUMENTATION BY FWEC, UNLESS OTHERWISE DESIGNATED BY "V".
5. DISTRIBUTED CONTROL SYSTEM (DCS) FUNCTIONS ARE FURNISHED BY JEA.

| REV. | DATE | BY | DESCRIPTION |
|---|---|---|---|
| D | 3/9/01 | SH | REVISED AS NOTED |
| C | 10/27/00 | MS | REVISED AS NOTED |
| B | 7/7/00 | MS | REVISED: SA/D FAN COOLING WATER CIRCUITRY. ADDED: VALVE TAG NUMBERS. |
| A | 3/3/00 | MS | INITIAL ISSUE |

REVISIONS

PROCESS & INSTRUMENTATION DIAGRAM
FAN AND GEARBOX
COOLING WATER

JEA JACKSONVILLE, FLORIDA

NORTHSIDE UNITS 1 & 2 REPOWERING PROJECT
Equipment No.: N01- & N12-
B&W Drawing No.: 62-3401C5-C4150

| DRAWING NUMBER | SCALE | REVISION |
|---|---|---|
| 43-7587-5-6130 | NONE | D |

| | | | |
|---|---|---|---|
| DRAWN BY | MS | 3-9-00 | 200758700 UNIT 2 DOE |
| CHECKED BY | JTD | 3-13-00 | 200761000 UNIT 1 JEA |
| APPROVED BY | JTD | 3-13-00 | |

THIS DRAWING IS THE PROPERTY OF THE FOSTER WHEELER ENERGY CORPORATION FORMERLY L. & C.

P062713.62.3401.05-C4150 St:RD 11/17/01 MM-02280

CRA33213 11-SEP-2002 15:54:54

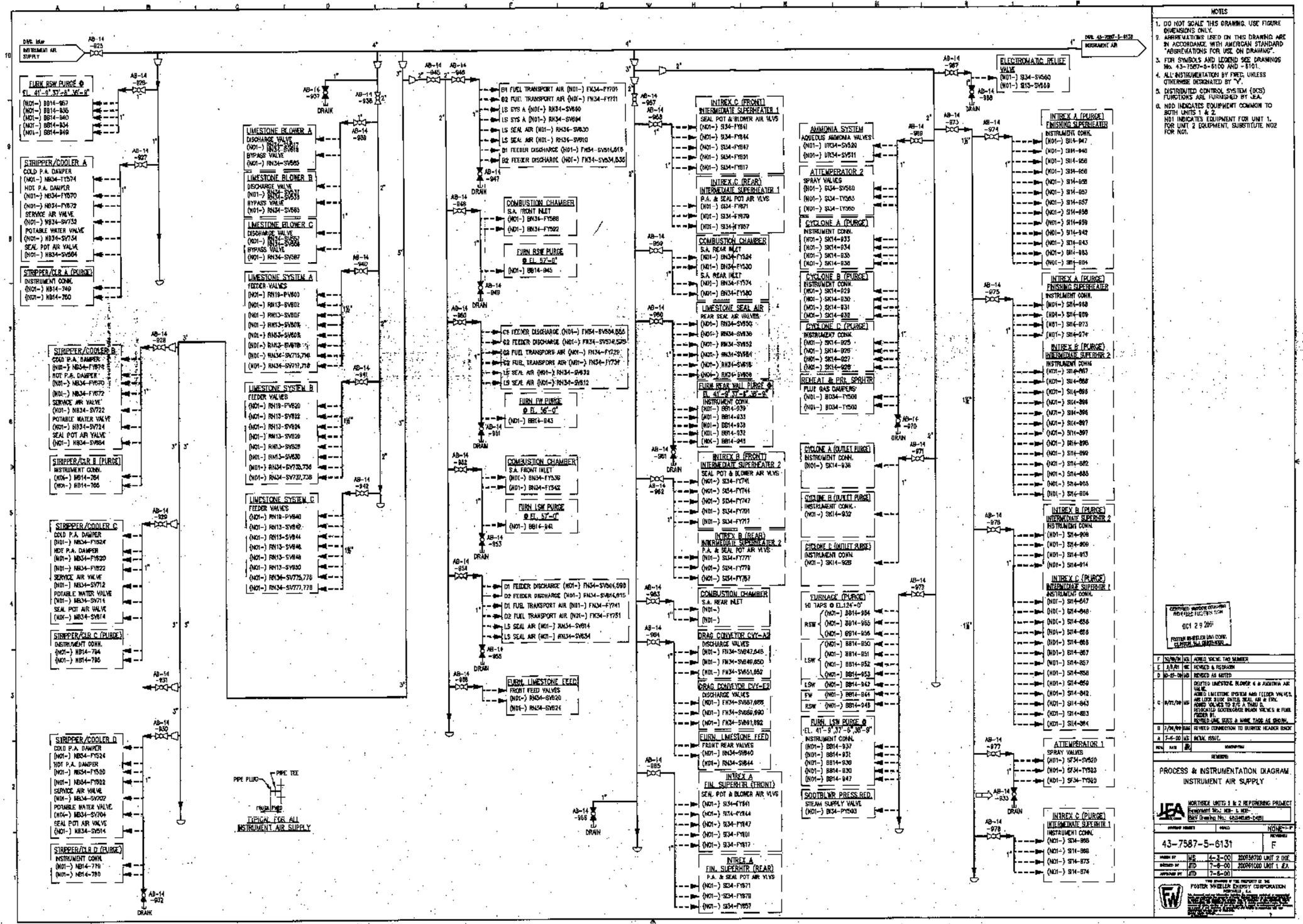


P062713.62.3401.05-C4151 St:RD 11/17/01 MM-02280

CRA33213 11-SEP-2002 15:54:13

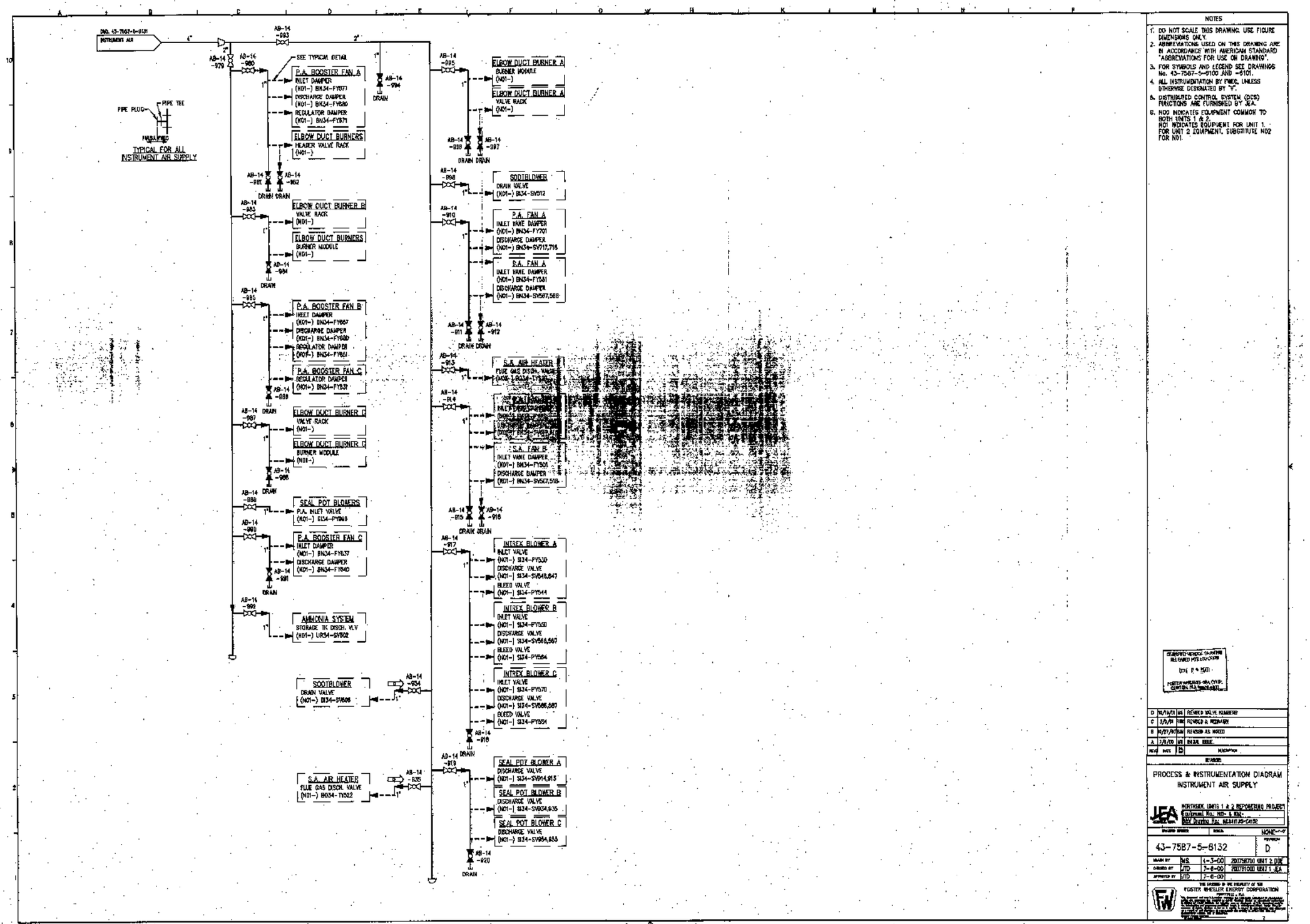


NOTES

1. DO NOT SCALE THIS DRAWING. USE FIGURE DIMENSIONS ONLY.
2. ABBREVIATIONS USED ON THIS DRAWING ARE IN ACCORDANCE WITH AMERICAN STANDARD "ABBREVIATIONS FOR USE ON DRAWING".
3. FOR SYMBOLS AND LEGEND SEE DRAWINGS No. 43-7587-5-9100 AND -6101.
4. ALL INSTRUMENTATION BY FWEC, UNLESS OTHERWISE DESIGNATED BY "Y".
5. DISTRIBUTED CONTROL SYSTEM (DCS) FUNCTIONS ARE FURNISHED BY JEA.
6. N00 INDICATES EQUIPMENT COMMON TO BOTH UNITS 1 & 2.
   N01 INDICATES EQUIPMENT FOR UNIT 1. FOR UNIT 2 EQUIPMENT, SUBSTITUTE N02 FOR N01.

| REV | DATE | BY | DESCRIPTION |
|---|---|---|---|
| D | 10/19/01 | MS | REVISED VALVE NUMBERS |
| C | 3/8/01 | MM | REVISED & REDRAWN |
| B | 10/27/00 | MM | REVISED AS NOTED |
| A | 7/8/00 | MS | INITIAL ISSUE |

PROCESS & INSTRUMENTATION DIAGRAM
INSTRUMENT AIR SUPPLY

NORTHSIDE UNITS 1 & 2 REPOWERING PROJECT
Contract No. N01- & N02-
JEA Project No. 4E4411J5-C4152

SCALE: NONE
43-7587-5-8132
REVISION D

| | | | |
|---|---|---|---|
| DRAWN BY | MS | 4-3-00 | 20075870D1 UNIT 2.DGN |
| CHECKED BY | JTD | 7-6-00 | 20075870D1 UNIT 1.JEA |
| APPROVED BY | JTD | 7-6-00 | |

THE DESIGN & THE PROPERTY OF THE FOSTER WHEELER ENERGY CORPORATION

P062713.62.3401.05-C4152 St:RD 11/17/01 MM-02280

CRA33213 11-SEP-2002 15:53:54

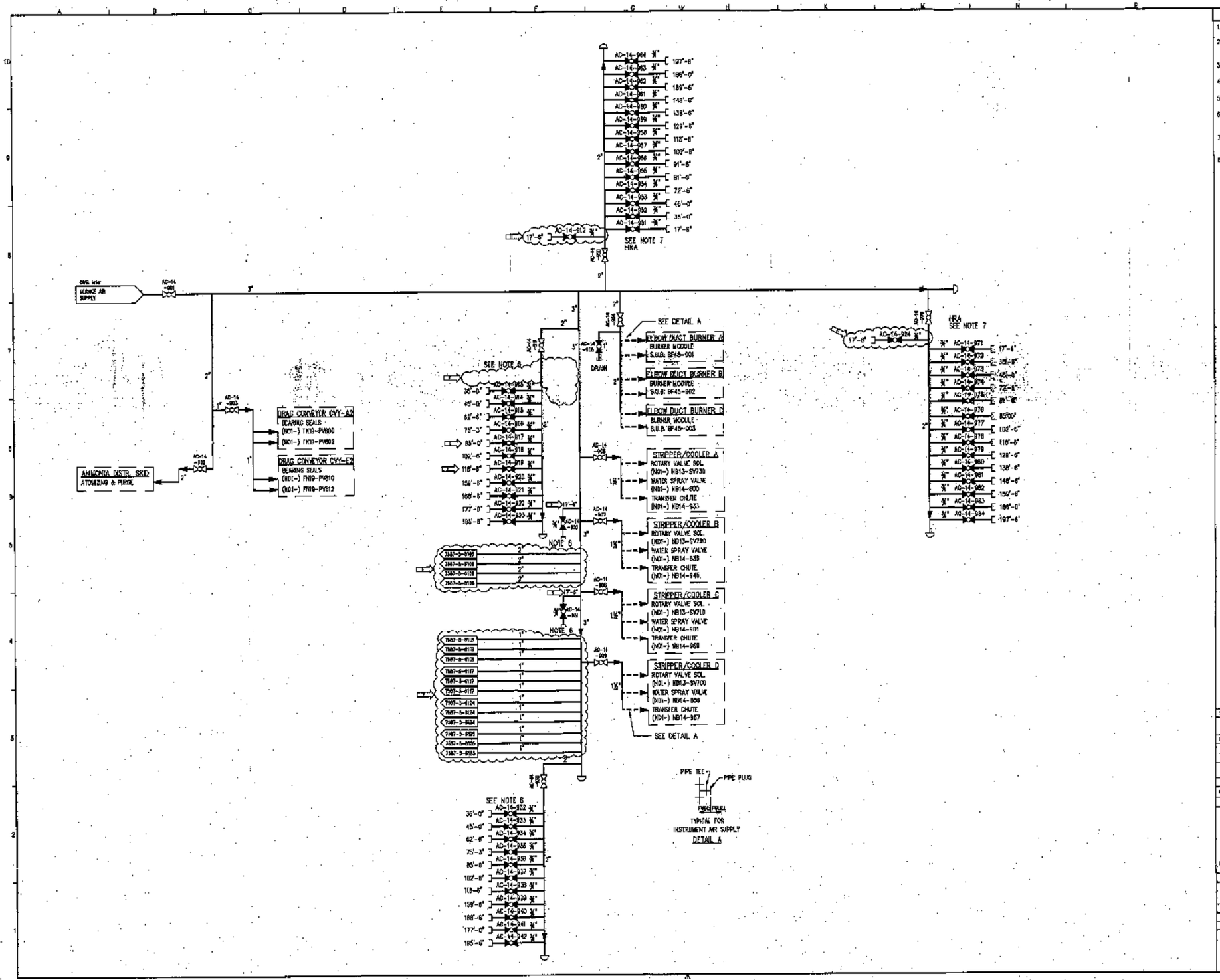


NOTES

1. DO NOT SCALE THIS DRAWING. USE FIGURE DIMENSIONS ONLY.
2. ABBREVIATIONS USED ON THIS DRAWING ARE IN ACCORDANCE WITH AMERICAN STANDARD "ABBREVIATIONS FOR USE ON DRAWING".
3. FOR SYMBOLS AND LEGEND SEE DRAWINGS No. 43-7587-5-8100 AND -6101.
4. ALL INSTRUMENTATION BY FWEC, UNLESS OTHERWISE DESIGNATED BY "Y".
5. DISTRIBUTED CONTROL SYSTEM (DCS) FUNCTIONS ARE FURNISHED BY JEA.
6. MAINTENANCE AIR CONNECTIONS LOCATED AT ELEVATIONS SHOWN NEAR PLATFORM ON EACH SIDE OF BOILER BAY.
7. MAINTENANCE AIR CONNECTIONS LOCATED AT ELEVATIONS SHOWN NEAR PLATFORM ON EACH SIDE OF HRA.
8. N00 INDICATES EQUIPMENT COMMON TO BOTH UNITS 1 & 2. N01 INDICATES EQUIPMENT FOR UNIT 1. FOR UNIT 2 EQUIPMENT, SUBSTITUTE N02 FOR N01.

| | | | |
|---|---|---|---|
| F | 10/19/01 | MS | ADDED LINES FOR ASBRGT. |
| E | 3/9/01 | DWH | ADDED DCS SERV. VALVE TAGS, INSTRUMENT AIR VALVE TAGS AND NOTE 8. |
| D | 10/12/00 | DWH | REVISED AS NOTED |
| C | 8/22/00 | MS | ADDED DETAIL A, MAINTENANCE CONNECTIONS & NOTES 6 & 7. REVISED TAGS & UNIT SIZES AS SHOWN. |
| B | 7/24/00 | DWH | ADDED SERVICE (PURGE) CONNECTION TO E-BURN BURNER. |
| A | 7/6/00 | MS | INITIAL ISSUE. |
| REV | DATE | BY | DESCRIPTION |

REVISIONS

PROCESS & INSTRUMENTATION DIAGRAM
SERVICE AIR SUPPLY

JEA
NORTHSIDE UNITS 1 & 2 REPOWERING PROJECT
Equipment No.: N01- & N02-
JEA Drawing No.: 62-240.05-C-0153

Contract Number: 90-147 | Scale: NONE | Revision: F

43-7587-5-6133

| | | | |
|---|---|---|---|
| DRAWN BY | MS | 4-6-00 | 200736700 UNIT 2 DCE |
| REVISED BY | JTD | 7-6-00 | 200761000 UNIT 1 JLA |
| AUTHORIZED BY | JTD | 7-6-00 | |

FOSTER WHEELER ENERGY CORPORATION
PERRYVILLE, N.J.

THIS DRAWING IS THE PROPERTY OF THE FOSTER WHEELER ENERGY CORPORATION, PERRYVILLE, N.J. ... PROHIBITED.

CRA33213 11-SEP-2002 15:55:31

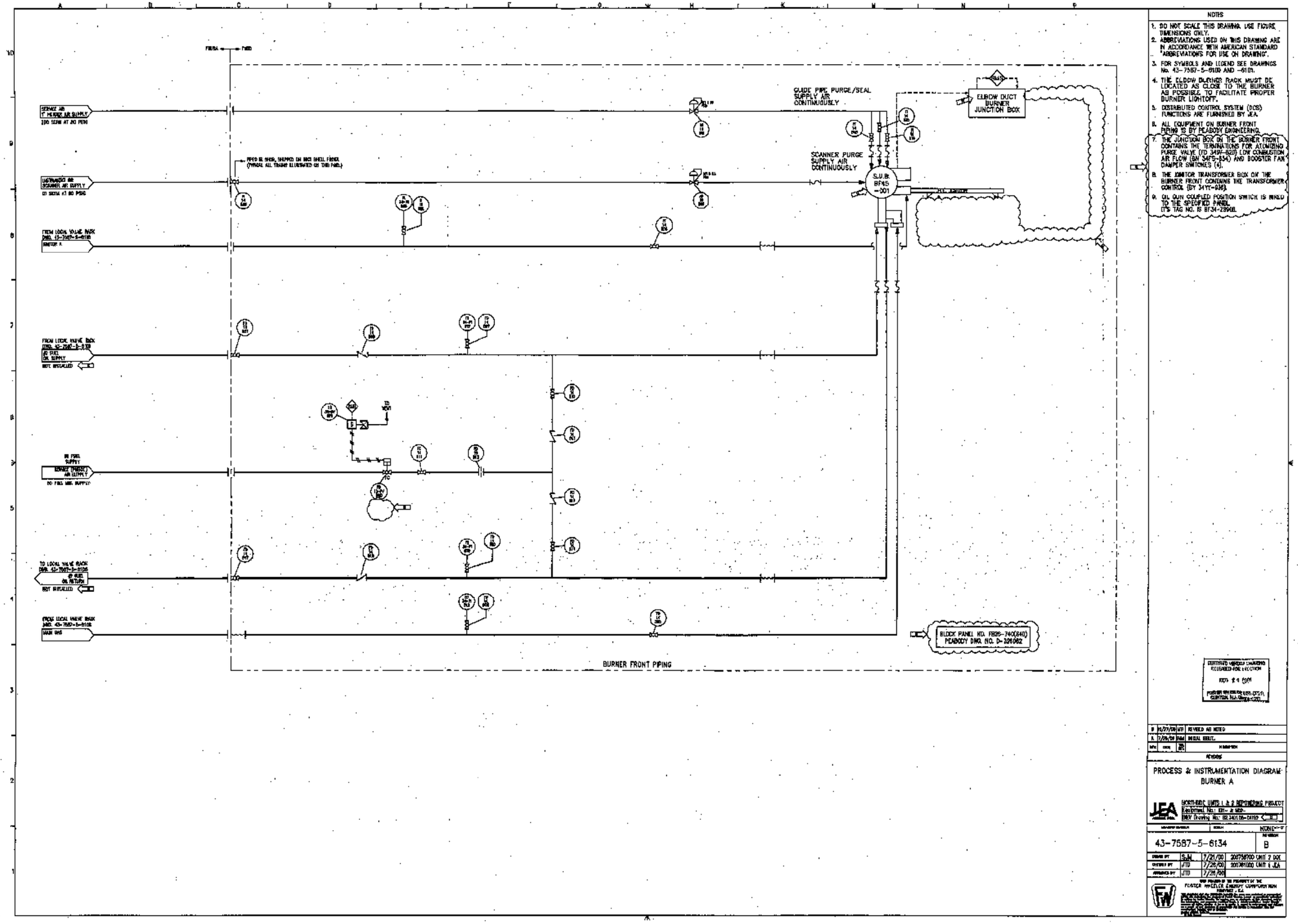


NOTES

1. DO NOT SCALE THIS DRAWING. USE FIGURE DIMENSIONS ONLY.
2. ABBREVIATIONS USED ON THIS DRAWING ARE IN ACCORDANCE WITH AMERICAN STANDARD "ABBREVIATIONS FOR USE ON DRAWING".
3. FOR SYMBOLS AND LEGEND SEE DRAWINGS No. 43-7587-5-6100 AND -6101.
4. THE ELBOW BURNER RACK MUST BE LOCATED AS CLOSE TO THE BURNER AS POSSIBLE TO FACILITATE PROPER BURNER LIGHTOFF.
5. DISTRIBUTED CONTROL SYSTEM (DCS) FUNCTIONS ARE FURNISHED BY JEA.
6. ALL EQUIPMENT ON BURNER FRONT PIPING IS BY PEABODY ENGINEERING.
7. THE JUNCTION BOX ON THE BURNER FRONT CONTAINS THE TERMINATIONS FOR ATOMIZING PURGE VALVE (TD 341V-6201) LOW COMBUSTION AIR FLOW (BN 341S-834) AND BOOSTER FAN DAMPER SWITCHES (4).
8. THE IGNITOR TRANSFORMER BOX ON THE BURNER FRONT CONTAINS THE TRANSFORMER CONTROL (BY 341YC-836).
9. OIL GUN COUPLED POSITION SWITCH IS WIRED TO THE SPECIFIED PANEL. (ITS TAG NO. IS BF34-2396B).

| | | | |
|---|---|---|---|
| B | 10/27/00 | WB | REVISED AS NOTED |
| A | 7/26/00 | RMM | INITIAL ISSUE. |
| REV | DATE | BY | REVISION |

REVISIONS

PROCESS & INSTRUMENTATION DIAGRAM
BURNER A

JEA
NORTHSIDE UNITS 1 & 2 REPOWERING PROJECT
Engineering No.: 1311- & 1312-
DWG Drawing No.: 62.3401.05-DATED

| | | |
|---|---|---|
| DRAWING NUMBER | SCALE | NONE |
| 43-7587-5-6134 | | REVISION B |

| | | | |
|---|---|---|---|
| DRAWN BY | S.H. | 7/21/00 | 200756700 UNIT 2 DCS |
| CHECKED BY | JTD | 7/26/00 | 200781000 UNIT 1 JEA |
| APPROVED BY | JTD | 7/26/00 | |

THIS DRAWING IS THE PROPERTY OF THE FOSTER WHEELER ENERGY CORPORATION

P062713.62.3401.05-C4162 St:RD 11/17/01 MM-02280

CRA33213 12-SEP-2002 09:37:12

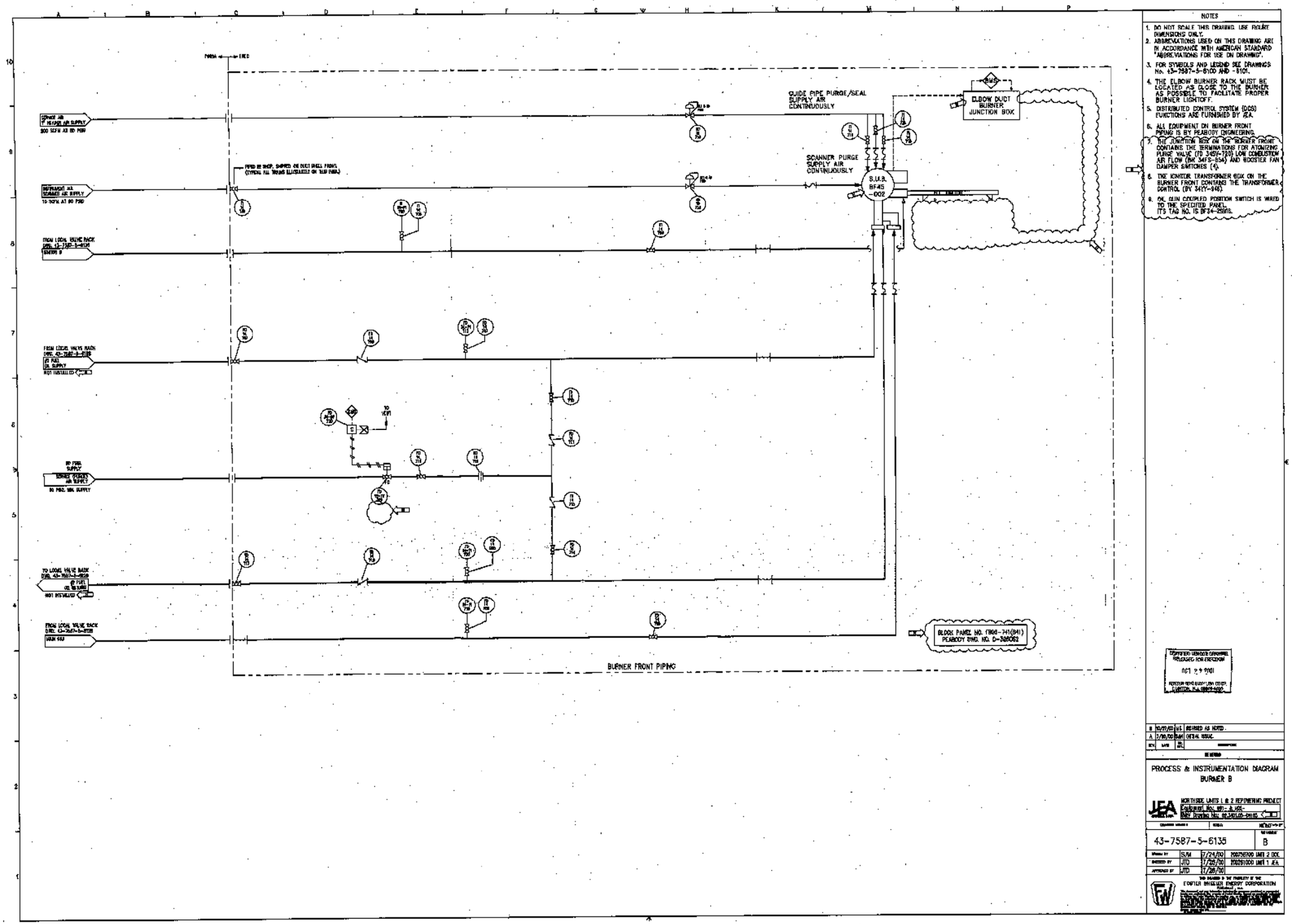


NOTES

1. DO NOT SCALE THIS DRAWING. USE FIGURE DIMENSIONS ONLY.
2. ABBREVIATIONS USED ON THIS DRAWING ARE IN ACCORDANCE WITH AMERICAN STANDARD "ABBREVIATIONS FOR USE ON DRAWING".
3. FOR SYMBOLS AND LEGEND SEE DRAWINGS No. 43-7587-5-6100 AND -6101.
4. THE ELBOW BURNER RACK MUST BE LOCATED AS CLOSE TO THE BURNER AS POSSIBLE TO FACILITATE PROPER BURNER LIGHTOFF.
5. DISTRIBUTED CONTROL SYSTEM (DCS) FUNCTIONS ARE FURNISHED BY JEA.
6. ALL EQUIPMENT ON BURNER FRONT PIPING IS BY PEABODY ENGINEERING.
7. THE JUNCTION BOX ON THE BURNER FRONT CONTAINS THE TERMINATIONS FOR ATOMIZING PURGE VALVE (TO 34SV-720) LOW COMBUSTION AIR FLOW (BM 34FS-654) AND BOOSTER FAN DAMPER SWITCHES (4).
8. THE IGNITOR TRANSFORMER BOX ON THE BURNER FRONT CONTAINS THE TRANSFORMER CONTROL (BY 34CY-946).
9. OK GUN COUPLED POSITION SWITCH IS WIRED TO THE SPECIFIED PANEL. ITS TAG NO. IS BF34-25016.

CONTRACTOR VENDOR DRAWING RELEASED FOR CONSTRUCTION
OCT 22 2001

| REV. | DATE | BY | DESCRIPTION |
|---|---|---|---|
| B | 10/27/00 | J.E. | REVISED AS NOTED. |
| A | 7/28/00 | S.M. | INITIAL ISSUE. |

PROCESS & INSTRUMENTATION DIAGRAM
BURNER B

JEA
NORTHSIDE UNITS 1 & 2 REPOWERING PROJECT
Engineered No. 001 - JL 1024 -
BWF Drawing No. D-3401.05-C4163

43-7587-5-6135 | B

| | | | |
|---|---|---|---|
| Drawn by | SJM | 7/24/00 | 200725R700 UNIT 2 DCS |
| Checked by | JTD | 7/25/00 | 200251000 UNIT 1 JEA |
| Approved by | JTD | 7/26/00 | |

THIS DRAWING IS THE PROPERTY OF THE
BABCOCK BRIDGER ENERGY CORPORATION
Pittsburgh, Pa.

P062713.62.3401.05-C4163 St:RD 11/17/01 MM-02280

CRA33213 12-SEP-2002 09:36:44

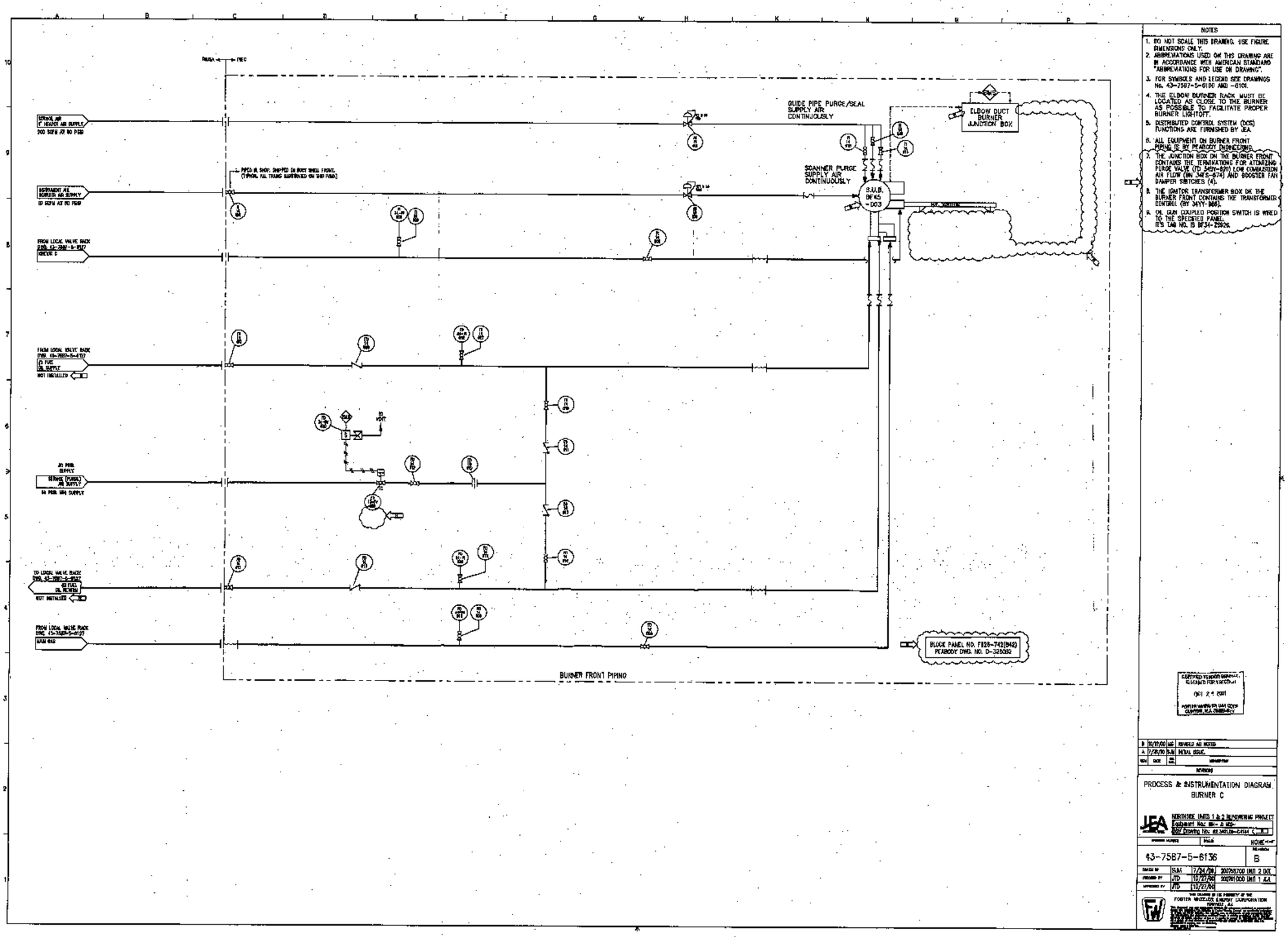


NOTES

1. DO NOT SCALE THIS DRAWING. USE FIGURE DIMENSIONS ONLY.
2. ABBREVIATIONS USED ON THIS DRAWING ARE IN ACCORDANCE WITH AMERICAN STANDARD "ABBREVIATIONS FOR USE ON DRAWING".
3. FOR SYMBOLS AND LEGEND SEE DRAWINGS No. 43-7587-5-6100 AND -6101.
4. THE ELBOW BURNER RACK MUST BE LOCATED AS CLOSE TO THE BURNER AS POSSIBLE TO FACILITATE PROPER BURNER LIGHTOFF.
5. DISTRIBUTED CONTROL SYSTEM (DCS) FUNCTIONS ARE FURNISHED BY JEA.
6. ALL EQUIPMENT ON BURNER FRONT PIPING IS BY PEABODY ENGINEERING.
7. THE JUNCTION BOX ON THE BURNER FRONT CONTAINS THE TERMINATIONS FOR ATOMIZING PURGE VALVE (TD 34SV-820) LOW COMBUSTION AIR FLOW (BN 34FS-674) AND BOOSTER FAN DAMPER SWITCHES (4).
8. THE IGNITOR TRANSFORMER BOX ON THE BURNER FRONT CONTAINS THE TRANSFORMER CONTROL (BY 34YY-868).
9. OIL GUN COUPLED POSITION SWITCH IS WIRED TO THE SPECIFIED PANEL. ITS TAG NO. IS BF34-2592G.

| REV | DATE | BY | DESCRIPTION |
|---|---|---|---|
| B | 10/17/00 | MF | REVISED AS NOTED |
| A | 7/26/99 | SJM | INITIAL ISSUE. |

REVISIONS

PROCESS & INSTRUMENTATION DIAGRAM
BURNER C

JEA
NORTHSIDE UNITS 1 & 2 REPOWERING PROJECT
EQUIPMENT No.: BN- & BD-
BOP Drawing No. 62.3401.05-C4164

| DRAWING NUMBER | SCALE | REVISION |
|---|---|---|
| 43-7587-5-6136 | NONE | B |

| | | | |
|---|---|---|---|
| DRAWN BY | SJM | 7/24/99 | 200781000 UNIT 2 DCS |
| CHECKED BY | JTD | 10/27/99 | 200781000 UNIT 1 AA |
| APPROVED BY | JTD | 10/27/99 | |

THIS DRAWING IS THE PROPERTY OF THE FOSTER WHEELER ENERGY CORPORATION FORMERLY AA

P062713.62.3401.05-C4164 St:RD 11/17/01 MM-02280

CRA33213 12-SEP-2002 10:11:58

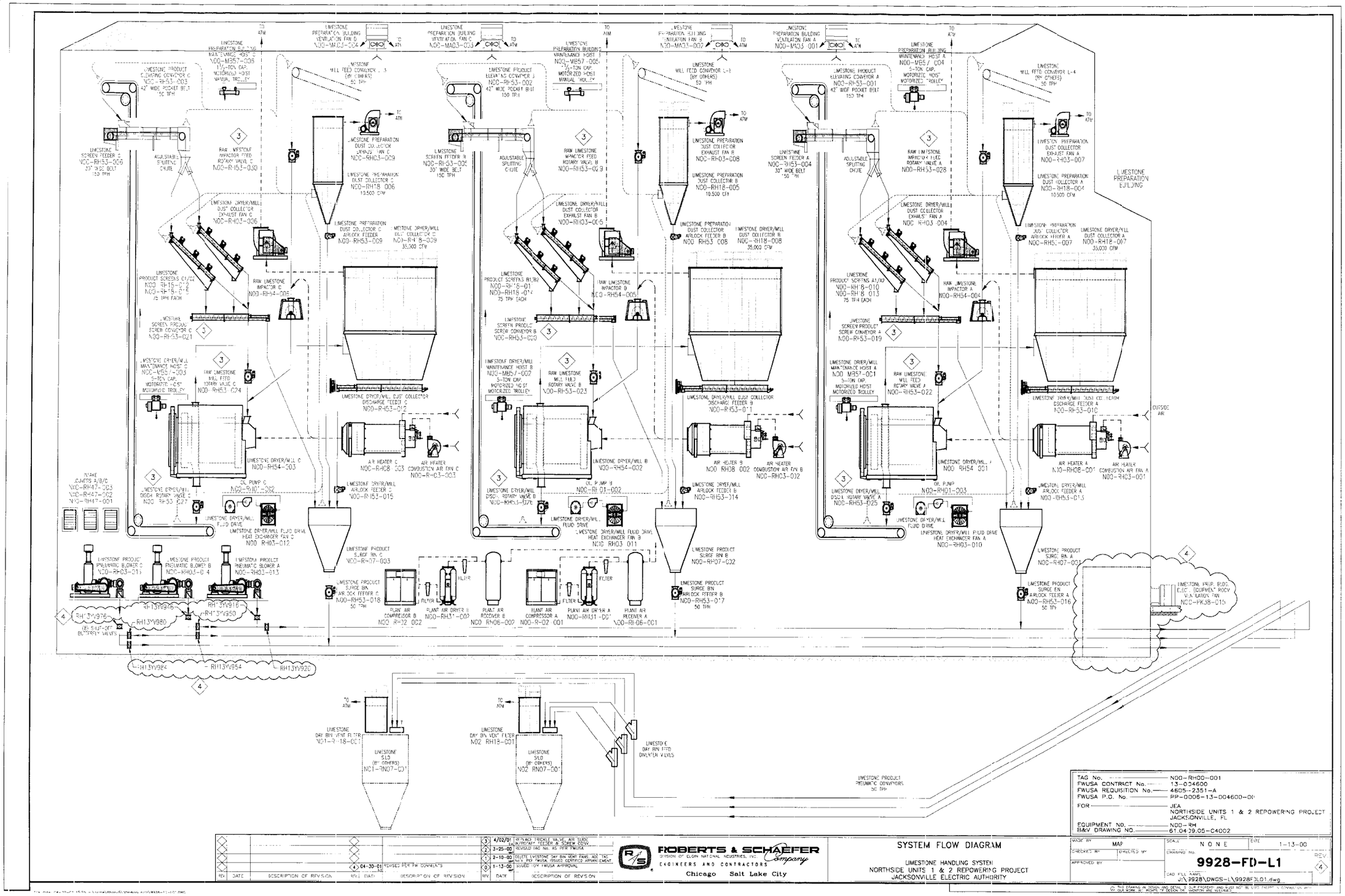


P062713.61.0409.05-C4002 St:RD 06/09/01 MM-01979

CRA33213 11-SEP-2002 14:17:20

3847-3-001

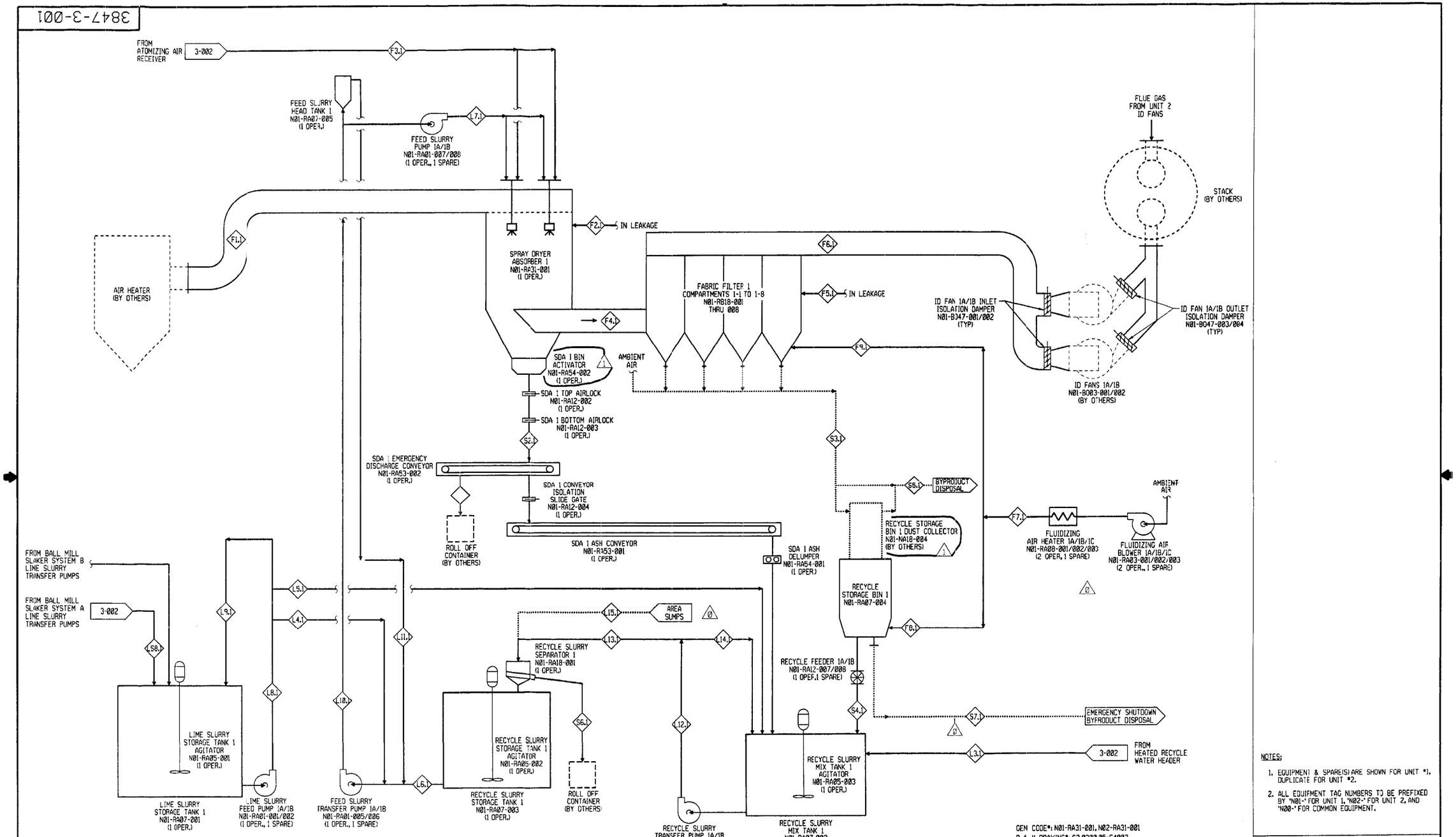


NOTES:

1. EQUIPMENT & SPARE(S) ARE SHOWN FOR UNIT #1, DUPLICATE FOR UNIT #2.
2. ALL EQUIPMENT TAG NUMBERS TO BE PREFIXED BY 'N01-' FOR UNIT 1, 'N02-' FOR UNIT 2, AND 'N00-' FOR COMMON EQUIPMENT.

This print and all information thereon is the property of Wheelabrator A.P.C. It is confidential and proprietary and must not be used, made public, or copied unless authorized in writing by Wheelabrator A.P.C. It is transmitted to you with the explicit understanding that it is subject to return upon request.

NOTE
FABRICATION, MANUFACTURING, OR DETAILING MAY PROCEED ONLY WHEN DRAWING IS ISSUED OR AUTHORIZED FOR SUCH PURPOSES.

| NO. | REVISION | DWN. | CHK. | DATE |
|---|---|---|---|---|
| B | REVISED AS NOTED | JFD | | 11-8-99 |
| C | REVISED AS NOTED | MCC | | 1-18-00 |
| D | REVISED AS NOTED | JFD | | 3-15-00 |
| E | REVISED AS NOTED | JFD | | 7-20-00 |
| F | REVISED AS NOTED | TRV | | 12-7-00 |

| NO. | REVISION | DWN. | CHK. | DATE |
|---|---|---|---|---|
| | | | | |

ISSUE RECORD

| REV. | DATE | TO | FOR |
|---|---|---|---|
| A | 9-24-99 | FOSTER WHEELER | APPROVAL |
| B | 11-8-99 | FOSTER WHEELER | APPROVAL |
| C | 1-18-00 | FOSTER WHEELER | APPROVAL |
| D | 3-15-00 | FOSTER WHEELER | APPROVAL |
| E | 7-20-00 | FOSTER WHEELER | CONSTRUCTION |
| F | 12-8-00 | FOSTER WHEELER | CONSTRUCTION |

| DRN. BY | JRU | DATE | 04-27-99 |
|---|---|---|---|
| CHKD. BY | | DATE | |
| APPVD. BY | PHP | DATE | 7-20-00 |
| SCALE | NONE | | |
| CERTIFIED BY: | | DATE: | |

FOSTER WHEELER
JACKSONVILLE ELECTRIC AUTHORITY
UNIT #1 & #2 REPOWERING PROJECT

PROCESS FLOW DIAGRAM
SHEET #1 OF 2

Wheelabrator Air Pollution Control
A Waste Management Company

DRAWING NUMBER 3847-3-001 REV. NO. 1

PLOT DATE:

P062713.62.0200.05-C4002 St:NE 01/19/01 MM-01412

**Foster Wheeler USA Corporation** — **WAPC Contract 3847**
**JEA Northside Units 1&2 Repowering Project** — **June2, 2000**

**AQCS System Mass Balances**

| | | | |
|---|---|---|---|
| **Foster Wheeler USA** | **Order No.** | **PP-0005-13-004600-00** | **WAPC Document Number** **3847-001; Rev No. 3** |
| | **Contract No.** | **13-004600** | |
| | **Requistion Number** | **4605-2356B** | |

| | **FWUSA Tag No.** | **JEA Tag No.** |
|---|---|---|
| **Scrubber Unit No. 1** | **FG-SC-201-T1** | **NO1-BO06-1** |
| **Scrubber Unit No. 2** | **FG-SC-201-T2** | **NO2-BO06-1** |
| **Particulate Collector Unit No. 1** | **FG-F-206-T1** | **NO1-BO18-1** |
| **Particulate Collector Unit No. 2** | **FG-F-206-T2** | **NO2-BO18-1** |

| Boiler Load % MCR | Fuel | % CFB SO2 Removal | Sheets | Boiler Load % MCR | Fuel | % CFB SO2 Removal | Sheets |
|---|---|---|---|---|---|---|---|
| 100% | Coke : Perfromance | 90% | 100 - 1 to 3 | 50% | Coke : Perfromance | 90% | 50 - 1 to 3 |
| 100% | Coke : Perfromance | 85% | 100 - 4 to 6 | 50% | Coke : Perfromance | 85% | 50 - 4 to 6 |
| 100% | Coke : Perfromance | 75% | 100 - 7 to 9 | 50% | Coke : Perfromance | 75% | 50 - 7 to 9 |
| 100% | Coke: Worst SO2 | 90% | 100 - 10 to 12 | 50% | Coke: Worst SO2 | 90% | 50 - 10 to 12 |
| 100% | Coke: Worst SO2 | 85% | 100 - 13 to 15 | 50% | Coke: Worst SO2 | 85% | 50 - 13 to 15 |
| 100% | Coke: Worst SO2 | 75% | 100 - 16 to 18 | 50% | Coke: Worst SO2 | 75% | 50 - 16 to 18 |
| 100% | Coal: Performance | 90% | 100 - 19 to 21 | 50% | Coal: Performance | 90% | 50 - 19 to 21 |
| 100% | Coal: Performance | 85% | 100 - 22 to 24 | 50% | Coal: Performance | 85% | 50 - 22 to 24 |
| 100% | Coal: Performance | 75% | 100 - 25 to 27 | 50% | Coal: Performance | 75% | 50 - 25 to 27 |
| 85% | Coal: Worst SO2 | 90% | 100 - 28 to 30 | 50% | Coal: Worst SO2 | 90% | 50 - 28 to 30 |
| 85% | Coal: Worst SO2 | 85% | 100 - 31 to 33 | 50% | Coal: Worst SO2 | 85% | 50 - 31 to 33 |
| 85% | Coal: Worst SO2 | 75% | 100 - 34 to 36 | 50% | Coal: Worst SO2 | 75% | 50 - 34 to 36 |
| 100% | Coke: Worst NOx | 90% | 100 - 37 to 39 | 50% | Coke: Worst NOx | 90% | 50 - 37 to 39 |
| 100% | Coke: Worst NOx | 85% | 100 - 40 to 42 | 50% | Coke: Worst NOx | 85% | 50 - 40 to 42 |
| 100% | Coke: Worst NOx | 75% | 100 - 43 to 45 | 50% | Coke: Worst NOx | 75% | 50 - 43 to 45 |
| 85% | Coal: Worst NOx | 90% | 100 - 46 to 48 | 50% | Coal: Worst NOx | 90% | 50 - 46 to 48 |
| 85% | Coal: Worst NOx | 85% | 100 - 49 to 51 | 50% | Coal: Worst NOx | 85% | 50 - 49 to 51 |
| 85% | Coal: Worst NOx | 75% | 100 - 52 to 54 | 50% | Coal: Worst NOx | 75% | 50 - 52 to 54 |
| 75% | Coke : Perfromance | 90% | 75 - 1 to 3 | | | | |
| 75% | Coke : Perfromance | 85% | 75 - 4 to 6 | | | | |
| 75% | Coke : Perfromance | 75% | 75 - 7 to 9 | | | | |
| 75% | Coke: Worst SO2 | 90% | 75 - 10 to 12 | | | | |
| 75% | Coke: Worst SO2 | 85% | 75 - 13 to 15 | | | | |
| 75% | Coke: Worst SO2 | 75% | 75 - 16 to 18 | | | | |
| 75% | Coal: Performance | 90% | 75 - 19 to 21 | | | | |
| 75% | Coal: Performance | 85% | 75 - 22 to 24 | | | | |
| 75% | Coal: Performance | 75% | 75 - 25 to 27 | | | | |
| 75% | Coal: Worst SO2 | 90% | 75 - 28 to 30 | | | | |
| 75% | Coal: Worst SO2 | 85% | 75 - 31 to 33 | | | | |
| 75% | Coal: Worst SO2 | 75% | 75 - 34 to 36 | | | | |
| 75% | Coke: Worst NOx | 90% | 75 - 37 to 39 | | | | |
| 75% | Coke: Worst NOx | 85% | 75 - 40 to 42 | | | | |
| 75% | Coke: Worst NOx | 75% | 75 - 43 to 45 | | | | |
| 75% | Coal: Worst NOx | 90% | 75 - 46 to 48 | | | | |
| 75% | Coal: Worst NOx | 85% | 75 - 49 to 51 | | | | |
| 75% | Coal: Worst NOx | 75% | 75 - 52 to 54 | | | | |

B&V Drawing No: 62.0200.05-C4001

CRA33213 28-OCT-2002 11:58:31

CRA33213 28-OCT-2002 12:05:22

**Foster Wheeler USA Corporation** — **WAPC Contract 3847**
**JEA Northside Units 1&2 Repowering Project** — **June 2, 2000**
**100% MCR; COKE: PEFROMANCE; 85% FB REM; 25% of CaO in fly ash is available** — **Rev #3**
**30 Deg F Approach Temperature**

| | F1.1 Unit 1 SDA Inlet | F2.1 Unit 1 SDA Inleak | F3.1 Unit 1 SDA Atom Air | F4.1 Unit 1 SDA Out | F5.1 Unit 1 FF Inleak | F6.1 Unit 1 FF Out | F7.1 Unit 1 Fluidizing Blower/ Heater Out | F8.1 Unit 1 Recycle Bin Fluidizing Air | F9.1 Unit 1 FF Fluidizing Air | 10.1 Not Used | F10.1 Not Used | F11.1 Slaker A or B Lime Conveying Air | F12.1 Lime Silo Vent Discharge | FA1 Slaker A or B Mill Vent Scrubber Fresh Air Inlet | FA2 Slaker A or B Mill Vent Scrubber Exhaust |
|---|---|---|---|---|---|---|---|---|---|---|---|---|---|---|---|
| lb/min CO2 | 9,458.0 | 0.0 | 0.0 | 9,458.0 | 0.0 | 9,458.0 | | | | | | | | | |
| lb/min O2 | 1,524.0 | 92.5 | 69.0 | 1,685.5 | 199.7 | 1,885.3 | 4.3 | 2.2 | 2.2 | | | 13.4 | 13.4 | 16.8 | 17.2 |
| lb/min N2 | 30,345.8 | 303.9 | 198.8 | 30,848.5 | 656.0 | 31,504.5 | 14.2 | 7.1 | 7.1 | | | 38.4 | 38.4 | 63.1 | 65.0 |
| lb/min H2O | 2,081.0 | 7.9 | 1.5 | 3,342.5 | 17.1 | 3,359.6 | 0.4 | 0.2 | 0.2 | | | 6.3 | 6.3 | 2.6 | 7.1 |
| lb/min SO2 | 61.97 | | | 13.42 | | 6.53 | | | | | | | | | |
| lb/min HCl | 6.50 | | | 2.90 | | 1.45 | | | | | | | | | |
| lb/min HF | 0.46 | | | 0.01 | | 0.01 | | | | | | | | | |
| lb/min SO3 | 2.34 | | | 2.34 | | 0.02 | | | | | | | | | |
| lb/min NOx | 3.92 | | | 3.92 | | 3.92 | | | | | | | | | |
| lb/min CO | 5.67 | | | 5.67 | | 5.67 | | | | | | | | | |
| lb/min VOC | 0.22 | | | 0.22 | | 0.22 | | | | | | | | | |
| lb/min NH3 | 0.37 | | | 0.37 | | 0.37 | | | | | | | | | |
| lb/min subtotal fluegas | 43,490.3 | 404.4 | 269.3 | 45,363.4 | 872.8 | 46,225.5 | 18.9 | 9.4 | 9.4 | | | 58.1 | 58.1 | 74.0 | 74.0 |
| lb/min CaO (available) | 32.4 | | | 27.5 | | 0.0 | | | | | | | | | |
| lb/min CaO (unavailable) | 85.9 | | | 167.7 | | 0.1 | | | | | | | | | |
| lb/min Ca(OH)2 | 0.0 | | | 87.6 | | 0.0 | | | | | | | | | |
| lb/min CaSO3°1/2H2O | | | | 207.9 | | 0.1 | | | | | | | | | |
| lb/min CaSO4 | 195.9 | | | 382.5 | | 0.2 | | | | | | | | | |
| Lb/min CaCl2 | 0.0 | | | 13.0 | | 0.0 | | | | | | | | | |
| lb/min CaF2 | 0.0 | | | 1.7 | | 0.0 | | | | | | | | | |
| lb/min Inerts | 21.2 | | | 68.0 | | 0.0 | | | | | | | | | |
| lb/min ash/unburned fuel | 13.4 | | | 26.2 | | 0.0 | | | | | | | | | |
| lb/min Pb | 0.12 | | | 0.10 | | 0.00 | | | | | | | | | |
| lb/min Hg | 7.40E-04 | | | 7.40E-04 | | 4.57E-04 | | | | | | | | | |
| lb/min subtotal solids | 348.8 | 0.0 | 0.0 | 982.2 | 0.0 | 0.5 | | | | | | | 0.0005 | | 0.0007 |
| lb/min total | 43839.1 | 407.3 | 266.6 | 46345.6 | 879.2 | 46238.5 | 18.9 | 9.4 | 9.4 | | | 58.1 | 58.1 | 74.0 | 74.0 |
| SCFM | 564,045 | 5,479 | 3,600 | 599,509 | 11,825 | 611,407 | 256 | 128 | 128 | | | 782 | 782 | 995 | 1,075 |
| SDCFM | 519,489 | 5,383 | 3,523 | 528,029 | 11,621 | 539,718 | 248 | 124 | 124 | | | 768 | 768 | 965 | 989 |
| ACFM | 831,673 | 5,605 | 612 | 736,777 | 12,098 | 765,443 | 219 | 110 | 110 | | | 781 | 800 | 1,020 | 1,181 |
| ACFM - Design | 879,280 | | 612 | 780,600 | | 810,000 | 274 | 137 | 137 | | | 800 | 800 | 1,185 | 1,185 |
| vol % CO2 | 14.7 | 0.0 | 0.0 | 13.8 | 0.0 | 13.5 | 0.0 | 0.0 | 0.0 | | | 0.0 | 0.0 | 0.0 | 0.0 |
| vol % O2 | 3.3 | 20.3 | 23.1 | 3.4 | 20.3 | 3.7 | 20.3 | 20.3 | 20.3 | | | 20.3 | 20.3 | 20.3 | 19.2 |
| vol % N2 | 74.1 | 76.4 | 76.0 | 70.9 | 76.4 | 71.0 | 76.4 | 76.4 | 76.4 | | | 76.4 | 76.4 | 76.4 | 72.8 |
| vol % H2O | 7.9 | 3.1 | 0.9 | 11.9 | 3.1 | 11.7 | 3.1 | 3.1 | 3.1 | | | 3.1 | 3.1 | 3.1 | 8.0 |
| ppm (v-wgb) SO2 | 662 | | | 135 | | 64 | | | | | | | | | |
| lb/MM Btu SO2 | 1.42 | | | 0.31 | | 0.15 | | | | | | | | | |
| ppm (v-wgb) HCl | 122 | | | 51 | | 25 | | | | | | | | | |
| lb/MM Btu HF | 0.0106 | | | 0.0002 | | 1.57E-04 | | | | | | | | | |
| lb/MM Btu SO3 | 0.054 | | | 0.054 | | 4.00E-04 | | | | | | | | | |
| ppm (v-wgb) NOx (as NO2) | 58 | | | 55 | | 54 | | | | | | | | | |
| ppm (v-wgb) CO | 138 | | | 130 | | 128 | | | | | | | | | |
| ppm (v-wgb) VOC as CH4 | 9 | | | 9 | | 9 | | | | | | | | | |
| ppm (v-wgb) NH3 | 15 | | | 14 | | 14 | | | | | | | | | |
| lb/ MM Btu Solid Particulate | 8.013 | | | 22.562 | | 0.011 | | | | | | | | | |
| gr/acf Solid Particulate | 2.918 | | | 9.332 | | 0.004 | | | | | | | 0.0048 | | 0.0042 |
| lb/MM Btu Pb | 2.8E-03 | | | 2.4E-03 | | 2.60E-05 | | | | | | | | | |
| lb/MM Btu Hg | 1.7E-05 | | | 1.7E-05 | | 1.05E-05 | | | | | | | | | |
| Tdb deg F | 280 | 80 | 120 | 152 | 80 | 150 | 300 | 300 | 300 | | | 80 | 80 | 80 | 120 |
| Twb deg F | 125 | 78 | 120 | 122 | 78 | 122 | | | | | | 78 | 78 | 78 | 109 |
| Tdp deg F | 105 | 76 | 120 | 119 | 76 | 119 | | | | | | 76 | 76 | 76 | 107 |
| Pa (in Hg) | 28.44 | 29.91 | 253.81 | 28.22 | 29.91 | 27.63 | 50.27 | 50.27 | 50.27 | | | 30.65 | 29.91 | 29.84 | 29.91 |
| Ps in. wg {psig} | -20.00 | 0.00 | {110} | -23.00 | 0.00 | -31.00 | {10} | {10} | {10} | | | 10.00 | 0.00 | -1.00 | 0.00 |



P062713.62.0200.05-C4001 0007 St:NE 08/03/00 MM-00732

CRA33213 28-OCT-2002 12:03:48



**100% MCR; COKE: PEFROMANCE; 85% FB REM; 25% of CaO in fly ash is available**
**30 Deg F Approach Temperature**

| | L1 Slaker A or B H2O (2 units) | L2 Total Dilution (Recycle) H2O | L3 Total Heated Dilution (Recycle) H2O | L3.1 Unit 1 Dilution H2O (Recycle H2O) to Mix Tank | L4.1 Unit 1 Lime Slurry to SDA | L5.1 Unit 1 Lime Slurry to Recycle Tank | L4.1+L5.1 Unit 1 Total Lime Slurry Feed | L6.1 Unit 1 Recycle Slurry Feed | L7.1 Unit 1 SDA Feed | L8.1 Unit 1 Lime Slurry Feed Pump Outlet | L9.1 Unit 1 Lime Slurry Feed Pump Return | L10.1 Unit 1 Feed Slurry Transfer Pump Outlet | L11.1 Unit 1 Feed Slurry Transfer Pump Return | L12.1 Unit 1 Recycle Transfer Pump Outlet | L13.1 Unit 1 Recycle Slurry Seperator Feed | L14.1 Unit 1 Recycle Transfer Pump Return | L15.1 From Local Sumps |
|---|---|---|---|---|---|---|---|---|---|---|---|---|---|---|---|---|---|
| Control Mode | On/Off | Batch Varaible | Batch Varaible | Batch Varaible | Batch Varaible | Batch Varaible | - | Continious Variable | Continious Variable | Continious | Continious | Continious | Continious | Batch On/Off | Batch On/Off | Batch On/Off | Batch On/Off |
| lb/min H2O | 604.3 | 1,934.1 | 1,934.1 | 967.0 | 281.0 | 0.0 | 281.0 | 971.0 | 1,252.0 | 2,373.9 | 2,092.9 | 1,841.3 | 589.3 | 1,503.8 | 971.0 | 532.8 | 0.0 |
| lb/min CaO (available) | 0.0 | 0.0 | 0.0 | 0.0 | 0.0 | 0.0 | 0.0 | 0.0 | 0.0 | 0.0 | 0.0 | 0.0 | 0.0 | 0.0 | 0.0 | 0.0 | 0.0 |
| lb/min CaO (unavailable) | 0.0 | 0.0 | 0.0 | 0.0 | 0.0 | 0.0 | 0.0 | 111.4 | 111.4 | 0.0 | 0.0 | 163.8 | 52.4 | 172.5 | 111.4 | 61.1 | 0.0 |
| lb/min Ca(OH)2 | 0.0 | 0.0 | 0.0 | 0.0 | 86.9 | 0.0 | 86.9 | 76.7 | 163.6 | 734.2 | 647.3 | 240.7 | 77.0 | 118.8 | 76.7 | 42.1 | 0.0 |
| lb/min CaSO3°1/2H2O | 0.0 | 0.0 | 0.0 | 0.0 | 0.0 | 0.0 | 0.0 | 146.7 | 146.7 | 0.0 | 0.0 | 215.8 | 69.1 | 227.2 | 146.7 | 80.5 | 0.0 |
| lb/min CaSO4 | 0.0 | 0.0 | 0.0 | 0.0 | 0.0 | 0.0 | 0.0 | 254.1 | 254.1 | 0.0 | 0.0 | 373.7 | 119.6 | 393.5 | 254.1 | 139.4 | 0.0 |
| lb/min CaCl2 | 0.0 | 0.0 | 0.0 | 0.0 | 0.0 | 0.0 | 0.0 | 9.8 | 9.8 | 0.0 | 0.0 | 14.3 | 4.6 | 15.1 | 9.8 | 5.4 | 0.0 |
| lb/min CaF2 | 0.0 | 0.0 | 0.0 | 0.0 | 0.0 | 0.0 | 0.0 | 1.1 | 1.1 | 0.0 | 0.0 | 1.7 | 0.5 | 1.8 | 1.1 | 0.6 | 0.0 |
| lb/min Inerts | 0.0 | 4.0 | 4.0 | 2.0 | 11.6 | 0.0 | 11.6 | 47.2 | 58.8 | 98.1 | 86.4 | 86.4 | 27.7 | 73.1 | 47.2 | 25.9 | 0.0 |
| lb/min ash/unburned fuel | 0.0 | 0.0 | 0.0 | 0.0 | 0.0 | 0.0 | 0.0 | 17.4 | 17.4 | 0.0 | 0.0 | 25.6 | 8.2 | 26.9 | 17.4 | 9.5 | 0.0 |
| lb/min Pb | 0.0 | 0.0 | 0.0 | 0.0 | 0.0 | 0.0 | 0.0 | 0.2 | 0.2 | 0.0 | 0.0 | 0.2 | 0.1 | 0.2 | 0.2 | 0.1 | 0.0 |
| lb/min Hg | 0.0 | 0.0 | 0.0 | 0.0 | 0.0 | 0.0 | 0.0 | 0.0 | 0.0 | 0.0 | 0.0 | 0.0 | 0.0 | 0.0 | 0.0 | 0.0 | 0.0 |
| lb/min subtotal solids | 0.0 | 4.0 | 4.0 | 2.0 | 98.5 | 0.0 | 98.5 | 664.5 | 763.0 | 832.3 | 733.8 | 1,122.2 | 359.2 | 1,029.1 | 664.5 | 364.6 | 0.0 |
| lb/min total | 604.3 | 1,938.1 | 1,938.1 | 969.0 | 379.5 | 0.0 | 379.5 | 1,635.5 | 2,015.0 | 3,206.2 | 2,826.7 | 2,963.5 | 948.5 | 2,532.9 | 1,635.5 | 897.4 | 0.0 |
| wt % moisture | - | | | - | - | - | - | | | - | | | | | | | |
| wt% solids | - | 0.2 | 0.2 | 0.2 | 26 | 0 | 26 | 41 | 38 | 26 | 26 | 38 | 38 | 41 | 41 | 41 | 5 |
| GPM | 72.5 | 232.4 | 232.4 | 116.2 | 38.5 | 0.0 | 38.5 | 148.5 | 187.0 | 325.0 | 286.5 | 275.0 | 88.0 | 230.0 | 148.5 | 81.5 | 0.0 |
| GPM - Design | 475.0 | 360.0 | 360.0 | 180.0 | 85.0 | 85.0 | 170.0 | 210.0 | 190.0 | 325.0 | 325.0 | 275.0 | 275.0 | 230.0 | 430.0 | 230.0 | 200.0 |
| Specific Gravity | 1.00 | 1.00 | 1.00 | 1.00 | 1.18 | 1.18 | 1.18 | 1.32 | 1.29 | 1.18 | 1.18 | 1.29 | 1.29 | 1.32 | 1.32 | 1.32 | 1.03 |
| Temperature | 60 | 60 | 88 | 88 | 120 | 120 | 120 | 94 | 99 | 120 | 120 | 99 | 99 | 94 | 94 | 94 | 60 |
| pH | Later | 4 - 10 | 4 - 10 | 4 - 10 | 12 | 12 | 12 | 10 - 12 | 10 - 12 | 12 | 12 | 10 - 12 | 10 - 12 | 10 - 12 | 10 - 12 | 10 - 12 | 10-12 |

| | S1 Total Pebble Lime (2 units) | S2.1 Unit 1 SDA Discharge | S3.1 Unit 1 FF Discharge | S4.1 Unit 1 Recycle Solids from Bin | S2.1+S3.1 Unit 1 Total Recycle Solids | S5.1 Unit 1 Total Solids Disposal | S6.1 Unit 1 Over Size Recycle Solids |
|---|---|---|---|---|---|---|---|
| Control Mode | Batch On/Off | Continious | Continious | Batch Variable | - | Continious | Batch On/Off |
| lb/min H2O | 0.0 | 2.6 | 14.8 | 7.2 | 9.8 | 7.6 | 0.4 |
| lb/min CaO (available) | 131.5 | 4.9 | 27.5 | 13.4 | 18.3 | 14.1 | 0.0 |
| lb/min CaO (unavailable) | 0.0 | 29.6 | 167.5 | 81.7 | 111.4 | 85.8 | 0.2 |
| lb/min Ca(OH)2 | 0.0 | 15.5 | 76.0 | 37.1 | 52.5 | 38.9 | 0.1 |
| lb/min CaSO3°1/2H2O | 0.0 | 36.7 | 225.4 | 110.0 | 146.7 | 115.4 | 0.3 |
| lb/min CaSO4 | 0.0 | 67.6 | 382.2 | 186.5 | 254.1 | 195.7 | 0.5 |
| lb/min CaCl2 | 0.0 | 2.3 | 15.3 | 7.5 | 9.8 | 7.8 | 0.0 |
| lb/min CaF2 | 0.0 | 0.3 | 1.7 | 0.8 | 1.1 | 0.9 | 0.0 |
| lb/min Inerts | 23.2 | 12.0 | 68.0 | 33.2 | 45.2 | 34.8 | 0.1 |
| lb/min ash/unburned fuel | 0.0 | 4.6 | 26.2 | 12.8 | 17.4 | 13.4 | 0.0 |
| lb/min Pb | 0.0 | 0.04 | 0.23 | 0.11 | 0.16 | 0.12 | 0.0 |
| lb/min Hg | 0.00E+00 | 3.36E-04 | 5.53E-04 | 2.70E-04 | 6.05E-04 | 2.83E-04 | 3.03E-06 |
| lb/min subtotal solids | 154.8 | 173.4 | 990.1 | 483.2 | 656.6 | 506.9 | 1.3 |
| lb/min total | 154.8 | 176.1 | 1,004.9 | 490.4 | 666.5 | 514.5 | 1.8 |
| Design lb/min Total | 1,000.0 | 200.0 | 1,140.0 | 800.0 | 1,000.0 | 1,140.0 | 5.0 |
| Bulk Density lb/ft3 | 55.0 | 30.0 | 30.0 | 30.0 | 30.0 | 30.0 | 60.0 |
| Temperature deg F] | 80.0 | 152.0 | 152.0 | 130.0 | - | 130.0 | 60.0 |
| wt % moisture | - | 1.5% | 1.5% | 1.5% | 1.5% | 1.5% | 25.0% |
| wt% solids | 100% | 98.5% | 98.5% | 98.5% | 98.5% | 98.5% | 75.0% |

**Data Shown is Time Averaged except for "Design" Values**



P062713.62.0200.05-C4001 0008 St:NE 08/03/00 MM-00732

CRA33213 28-OCT-2002 12:02:40



**100% MCR; COKE: PEFROMANCE; 85% FB REM; 25% of CaO in fly ash is available**
**30 Deg F Approach Temperature**

| | LS1 H2O to Mill | LS2 H2O to Vent Scrubber | LS3 Mill Recycle Pump Discharge | LS4 Mill OverFlow | LS5 Vent Scrubber Drain | LS6 Mill Seperator Tank discharge | LS7 Lime Slurry Transfer Pump Out | LS8.1 Lime Slurry to Unit 1 Lime Slurry Storage Tank | LS8.2 Lime Slurry to Unit 2 Lime Slurry Storage Tank | LS9 Lime Slurry Transfer Pump Return |
|---|---|---|---|---|---|---|---|---|---|---|
| Control Mode | Batch | Batch | Batch | Batch | Batch | Batch | Continious | Batch | Batch | Batch |
| lb/min H2O | 603.0 | 1.2 | 10,957 | 11,519 | 1.2 | 562.0 | 4,383 | 281.0 | 281.0 | 3,820.6 |
| lb/min CaO (available) | | | 0 | 0 | | 0.0 | 0 | 0.0 | 0.0 | 0.0 |
| lb/min CaO (unavailable) | | | 0 | 0 | | 0.0 | 0 | 0.0 | 0.0 | 0.0 |
| lb/min Ca(OH)2 | | | 3,389 | 3,563 | | 173.8 | 1,355 | 86.9 | 86.9 | 1,181.7 |
| lb/min CaSO3°1/2H2O | | | 0 | 0 | | 0.0 | 0 | 0.0 | 0.0 | 0.0 |
| lb/min CaSO4 | | | 0 | 0 | | 0.0 | 0 | 0.0 | 0.0 | 0.0 |
| lb/min CaCl2 | | | 0 | 0 | | 0.0 | 0 | 0.0 | 0.0 | 0.0 |
| lb/min CaF2 | | | 0 | 0 | | 0.0 | 0 | 0.0 | 0.0 | 0.0 |
| lb/min Inerts | | | 453 | 476 | | 23.2 | 181 | 11.6 | 11.6 | 157.8 |
| lb/min ash/unburned fuel | | | 0 | 0 | | 0.0 | 0 | 0.0 | 0.0 | 0.0 |
| lb/min Pb | | | 0 | 0 | | 0.0 | 0 | 0.0 | 0.0 | 0.0 |
| lb/min Hg | | | 0 | 0 | | 0.0 | 0 | 0.0 | 0.0 | 0.0 |
| lb/min subtotal solids | 0.0 | 0.0 | 3,841 | 4,038 | 0.0 | 197.0 | 1,536.5 | 98.5 | 98.5 | 1,339.5 |
| lb/min total | 603.0 | 1.0 | 14,798 | 15,557 | 1.2 | 759.1 | 5,919.2 | 379.5 | 379.5 | 5,160.1 |
| wt % moisture | - | - | - | - | - | - | - | - | - | - |
| wt% solids | - | - | 26% | 26% | - | 26% | 26% | 26% | 26% | 26% |
| GPM | 72.4 | 0.2 | 1500 | 1576.9 | 0.2 | 76.9 | 600.0 | 38.5 | 38.5 | 523.1 |
| GPM - Design | 475.0 | 1.0 | 1500 | 2000.0 | 1.0 | 500.0 | 600.0 | 600.0 | 600.0 | 600.0 |
| Specific Gravity | 1.00 | 1.00 | 1.18 | 1.18 | 1.00 | 1.18 | 1.18 | 1.18 | 1.18 | 1.18 |
| Temperature | 60 | 60 | 160 | 160 | 60 | 160 | 140 | 140 | 140 | 140 |
| pH | Later | Later | 12.5 | 12.5 | Later | 12.5 | 12.5 | 12.5 | 12.5 | 12.5 |

| | | CW1 Air Compressor Glycol/Air Cooler Inlet | CW2 Air Compressor After Cooler Glycol Inlet | CW3 Air Compressor Inter Cooler Glycol Inlet | CW4 Glycol/Water Circulating Pump Inlet | CW5 Glycol/Water Circulating Pump Outlet |
|---|---|---|---|---|---|---|
| lb/min H2O | H2O | 4,118 | 1,078 | 3,041 | 4,118 | 4,118 |
| lb/min CaO (available) | (CH2)2(OH)2 | 1,030 | 269 | 760 | 1,030 | 1,030 |
| Control Mode | | Continious | Continious | Continious | Continious | Continious |
| GPM | | 600 | 157 | 443 | 600 | 600 |
| GPM - Design | | 600 | 200 | 500 | 600 | 600 |
| Specific Gravity | | 1.03 | 1.03 | 1.03 | 1.03 | 1.03 |
| Temperature | | 112 | 104 | 104 | 123 | 123 |
| pH | | - | - | - | - | |

| | CA1 Total Compressor Output | F3 Total Atomizing Air | IA1 Compressed Air to Air Dryer | IA2.1 Pulse Air to Unit 1 | IA3 Instrument Air |
|---|---|---|---|---|---|
| Control Mode | Continious Variable | On/Off | Continious Variable | Continious Variable | Continious Variable |
| lb/min O2 | 151.1 | 138.0 | 13.0 | 6.2 | 0.8 |
| lb/min N2 | 435.2 | 397.6 | 37.6 | 17.8 | 2.2 |
| lb/min H2O | 0.3 | 3.0 | 0.0 | 0.0 | 0.0 |
| lb/min subtotal | 586.6 | 538.7 | 50.6 | 24.0 | 3.0 |
| SCFM | 7,880 | 7,200 | 680 | 320 | 40 |
| SCFM -Design | 9,000 | 7,200 | 900 | 430 | 40 |
| vol % O2 | 23.09 | 23.09 | 23.09 | 23.30 | 23.30 |
| vol % N2 | 76.01 | 76.01 | 76.01 | 76.70 | 76.70 |
| vol % H2O | 0.09 | 0.09 | 0.09 | 0.00 | 0.00 |
| Tdb deg F | 120 | 120 | 120 | 120 | 120 |
| Twb deg F | 120 | 120 | 120 | | |
| Tdp deg F | 120 | 120 | 120 | -30 | -30 |
| PSIG | 110 | 110 | 100 | 80 | 80 |

**Data Shown is Time Averaged except for "Design" Values**



P062713.62.0200.05-C4001 0009 St:NE 08/03/00 MM-00732

CRA33213 28-OCT-2002 12:01:10

**Foster Wheeler USA Corporation** — **WAPC Contract 3847**
**JEA Northside Units 1&2 Repowering Project** — **June 2, 2000**
**100% MCR; COAL: PEFROMANCE; 85% FB REM; 25% of CaO in fly ash is available** — **Rev #3**
**30 Deg F Approach Temperature**

| | F1.1 Unit 1 SDA Inlet | F2.1 Unit 1 SDA Inleak | F3.1 Unit 1 SDA Atom Air | F4.1 Unit 1 SDA Out | F5.1 Unit 1 FF Inleak | F6.1 Unit 1 FF Out | F7.1 Unit 1 Fluidizing Blower/ Heater Out | F8.1 Unit 1 Recycle Bin Fluidizing Air | F9.1 Unit 1 FF Fluidizing Air | 10.1 Not Used | F10.1 Not Used | F11.1 Slaker A or B Lime Conveying Air | F12.1 Lime Silo Vent Discharge | FA1 Slaker A or B Mill Vent Scrubber Fresh Air Inlet | FA2 Slaker A or B Mill Vent Scrubber Exhaust |
|---|---|---|---|---|---|---|---|---|---|---|---|---|---|---|---|
| lb/min CO2 | 8,956.0 | 0.0 | 0.0 | 8,956.0 | 0.0 | 8,956.0 | | | | | | | | | |
| lb/min O2 | 1,506.0 | 92.5 | 69.0 | 1,667.5 | 199.7 | 1,867.3 | 4.3 | 2.2 | 2.2 | | | 13.4 | 13.4 | 16.8 | 17.2 |
| lb/min N2 | 30,002.6 | 303.9 | 198.8 | 30,505.3 | 656.0 | 31,161.3 | 14.2 | 7.1 | 7.1 | | | 38.4 | 38.4 | 63.1 | 65.0 |
| lb/min H2O | 2,407.0 | 7.9 | 1.5 | 3,654.7 | 17.1 | 3,671.8 | 0.4 | 0.2 | 0.2 | | | 6.3 | 6.3 | 2.6 | 7.1 |
| lb/min SO2 | 34.17 | | | 10.68 | | 6.66 | | | | | | | | | |
| lb/min HCl | 15.37 | | | 2.88 | | 1.44 | | | | | | | | | |
| lb/min HF | 0.47 | | | 0.01 | | 0.01 | | | | | | | | | |
| lb/min SO3 | 0.82 | | | 0.82 | | 0.02 | | | | | | | | | |
| lb/min NOx | 4.00 | | | 4.00 | | 4.00 | | | | | | | | | |
| lb/min CO | 5.77 | | | 5.77 | | 5.77 | | | | | | | | | |
| lb/min VOC | 0.22 | | | 0.22 | | 0.22 | | | | | | | | | |
| lb/min NH3 | 0.37 | | | 0.37 | | 0.37 | | | | | | | | | |
| lb/min subtotal fluegas | 42,932.8 | 404.4 | 269.3 | 44,808.3 | 872.8 | 45,674.9 | 18.9 | 9.4 | 9.4 | | | 58.1 | 58.1 | 74.0 | 74.0 |
| lb/min CaO (available) | 23.8 | | | 20.2 | | 0.0 | | | | | | | | | |
| lb/min CaO (unavailable) | 63.1 | | | 154.7 | | 0.1 | | | | | | | | | |
| lb/min Ca(OH)2 | 0.0 | | | 24.6 | | 0.0 | | | | | | | | | |
| lb/min CaSO3°1/2H2O | | | | 129.7 | | 0.1 | | | | | | | | | |
| lb/min CaSO4 | 108.0 | | | 264.8 | | 0.2 | | | | | | | | | |
| Lb/min CaCl2 | 0.0 | | | 50.7 | | 0.0 | | | | | | | | | |
| lb/min CaF2 | 0.0 | | | 2.2 | | 0.0 | | | | | | | | | |
| lb/min Inerts | 14.1 | | | 50.6 | | 0.0 | | | | | | | | | |
| lb/min ash/unburned fuel | 134.0 | | | 328.8 | | 0.0 | | | | | | | | | |
| lb/min Pb | 0.12 | | | 0.10 | | 0.00 | | | | | | | | | |
| lb/min Hg | 7.55E-04 | | | 7.55E-04 | | 4.66E-04 | | | | | | | | | |
| lb/min subtotal solids | 343.0 | 0.0 | 0.0 | 1026.6 | 0.0 | 0.5 | | | | | | | 0.0005 | | 0.0007 |
| lb/min total | 43275.8 | 407.3 | 266.6 | 45834.9 | 879.2 | 45664.1 | 18.9 | 9.4 | 9.4 | | | 58.1 | 58.1 | 74.0 | 74.0 |
| SCFM | 561,609 | 5,479 | 3,600 | 596,329 | 11,825 | 608,247 | 256 | 128 | 128 | | | 782 | 782 | 995 | 1,075 |
| SDCFM | 510,073 | 5,383 | 3,523 | 518,675 | 11,621 | 530,384 | 248 | 124 | 124 | | | 768 | 768 | 965 | 989 |
| ACFM | 825,946 | 5,605 | 612 | 734,548 | 12,098 | 763,116 | 219 | 110 | 110 | | | 781 | 800 | 1,020 | 1,181 |
| ACFM - Design | 879,280 | | 612 | 780,600 | | 810,000 | 274 | 137 | 137 | | | 800 | 800 | 1,185 | 1,185 |
| vol % CO2 | 14.0 | 0.0 | 0.0 | 13.2 | 0.0 | 12.9 | 0.0 | 0.0 | 0.0 | | | 0.0 | 0.0 | 0.0 | 0.0 |
| vol % O2 | 3.2 | 20.3 | 23.1 | 3.4 | 20.3 | 3.7 | 20.3 | 20.3 | 20.3 | | | 20.3 | 20.3 | 20.3 | 19.2 |
| vol % N2 | 73.6 | 76.4 | 76.0 | 70.5 | 76.4 | 70.6 | 76.4 | 76.4 | 76.4 | | | 76.4 | 76.4 | 76.4 | 72.8 |
| vol % H2O | 9.2 | 3.1 | 0.9 | 13.0 | 3.1 | 12.8 | 3.1 | 3.1 | 3.1 | | | 3.1 | 3.1 | 3.1 | 8.0 |
| ppm (v-wgb) SO2 | 366 | | | 108 | | 66 | | | | | | | | | |
| lb/MM Btu SO2 | 0.77 | | | 0.24 | | 0.15 | | | | | | | | | |
| ppm (v-wgb) HCl | 122 | | | 51 | | 25 | | | | | | | | | |
| lb/MM Btu HF | 0.0106 | | | 0.0002 | | 1.57E-04 | | | | | | | | | |
| lb/MM Btu SO3 | 0.018 | | | 0.018 | | 4.00E-04 | | | | | | | | | |
| ppm (v-wgb) NOx (as NO2) | 60 | | | 56 | | 55 | | | | | | | | | |
| ppm (v-wgb) CO | 141 | | | 133 | | 130 | | | | | | | | | |
| ppm (v-wgb) VOC as CH4 | 9 | | | 9 | | 9 | | | | | | | | | |
| ppm (v-wgb) NH3 | 15 | | | 14 | | 14 | | | | | | | | | |
| lb/ MM Btu Solid Particulate | 7.726 | | | 23.121 | | 0.011 | | | | | | | | | |
| gr/acf Solid Particulate | 2.889 | | | 9.783 | | 0.003 | | | | | | | 0.0048 | | 0.0042 |
| lb/MM Btu Pb | 2.8E-03 | | | 2.4E-03 | | 2.60E-05 | | | | | | | | | |
| lb/MM Btu Hg | 1.7E-05 | | | 1.7E-05 | | 1.05E-05 | | | | | | | | | |
| Tdb deg F | 280 | 80 | 120 | 155 | 80 | 153 | 300 | 300 | 300 | | | 80 | 80 | 80 | 120 |
| Twb deg F | 127 | 78 | 120 | 122 | 78 | 125 | | | | | | 78 | 78 | 78 | 109 |
| Tdp deg F | 110 | 76 | 120 | 123 | 76 | 122 | | | | | | 76 | 76 | 76 | 107 |
| Pa (in Hg) | 28.51 | 29.91 | 253.81 | 28.29 | 29.91 | 27.70 | 50.27 | 50.27 | 50.27 | | | 30.65 | 29.91 | 29.84 | 29.91 |
| Ps in. wg {psig} | -19.00 | 0.00 | {110} | -22.00 | 0.00 | -30.00 | {10} | {10} | {10} | | | 10.00 | 0.00 | -1.00 | 0.00 |



P062713.62.0200.05-C4001 0025 St:NE 08/03/00 MM-00732

**100% MCR; COAL: PEFROMANCE; 85% FB REM; 25% of CaO in fly ash is available**
**30 Deg F Approach Temperature**

| | L1 Slaker A or B H2O (2 units) | L2 Total Dilution (Recycle) H2O | L3 Total Heated Dilution (Recycle) H2O | L3.1 Unit 1 Dilution H2O (Recycle H2O) to Mix Tank | L4.1 Unit 1 Lime Slurry to SDA | L5.1 Unit 1 Lime Slurry to Recycle Tank | L4.1+L5.1 Unit 1 Total Lime Slurry Feed | L6.1 Unit 1 Recycle Slurry Feed | L7.1 Unit 1 SDA Feed | L8.1 Unit 1 Lime Slurry Feed Pump Outlet | L9.1 Unit 1 Lime Slurry Feed Pump Return | L10.1 Unit 1 Feed Slurry Transfer Pump Outlet | L11.1 Unit 1 Feed Slurry Transfer Pump Return | L12.1 Unit 1 Recycle Transfer Pump Outlet | L13.1 Unit 1 Recycle Slurry Seperator Feed | L14.1 Unit 1 Recycle Transfer Pump Return | L15.1 From Local Sumps |
|---|---|---|---|---|---|---|---|---|---|---|---|---|---|---|---|---|---|
| Control Mode | On/Off | Batch Varaible | Batch Varaible | Batch Varaible | Batch Varaible | Batch Varaible | - | Continious Variable | Continious Variable | Continious | Continious | Continious | Continious | Batch On/Off | Batch On/Off | Batch On/Off | Batch On/Off |
| lb/min H2O | 237.6 | 2,241.8 | 2,241.8 | 1,120.9 | 110.5 | 0.0 | 110.5 | 1,127.8 | 1,238.3 | 2,373.9 | 2,263.5 | 1,802.3 | 564.1 | 1,492.4 | 1,127.8 | 364.6 | 0.0 |
| lb/min CaO (available) | 0.0 | 0.0 | 0.0 | 0.0 | 0.0 | 0.0 | 0.0 | 0.0 | 0.0 | 0.0 | 0.0 | 0.0 | 0.0 | 0.0 | 0.0 | 0.0 | 0.0 |
| lb/min CaO (unavailable) | 0.0 | 0.0 | 0.0 | 0.0 | 0.0 | 0.0 | 0.0 | 118.9 | 118.9 | 0.0 | 0.0 | 173.1 | 54.2 | 157.4 | 118.9 | 38.4 | 0.0 |
| lb/min Ca(OH)2 | 0.0 | 0.0 | 0.0 | 0.0 | 34.2 | 0.0 | 34.2 | 35.4 | 69.6 | 734.2 | 700.1 | 101.3 | 31.7 | 46.9 | 35.4 | 11.4 | 0.0 |
| lb/min CaSO3°1/2H2O | 0.0 | 0.0 | 0.0 | 0.0 | 0.0 | 0.0 | 0.0 | 105.3 | 105.3 | 0.0 | 0.0 | 153.2 | 48.0 | 139.3 | 105.3 | 34.0 | 0.0 |
| lb/min CaSO4 | 0.0 | 0.0 | 0.0 | 0.0 | 0.0 | 0.0 | 0.0 | 203.6 | 203.6 | 0.0 | 0.0 | 296.3 | 92.7 | 269.4 | 203.6 | 65.8 | 0.0 |
| lb/min CaCl2 | 0.0 | 0.0 | 0.0 | 0.0 | 0.0 | 0.0 | 0.0 | 40.3 | 40.3 | 0.0 | 0.0 | 58.7 | 18.4 | 53.3 | 40.3 | 13.0 | 0.0 |
| lb/min CaF2 | 0.0 | 0.0 | 0.0 | 0.0 | 0.0 | 0.0 | 0.0 | 1.7 | 1.7 | 0.0 | 0.0 | 2.5 | 0.8 | 2.2 | 1.7 | 0.5 | 0.0 |
| lb/min Inerts | 0.0 | 4.0 | 4.0 | 2.0 | 4.6 | 0.0 | 4.6 | 40.9 | 45.5 | 98.1 | 93.5 | 66.2 | 20.7 | 54.1 | 40.9 | 13.2 | 0.0 |
| lb/min ash/unburned fuel | 0.0 | 0.0 | 0.0 | 0.0 | 0.0 | 0.0 | 0.0 | 252.8 | 252.8 | 0.0 | 0.0 | 368.0 | 115.2 | 334.6 | 252.8 | 81.7 | 0.0 |
| lb/min Pb | 0.0 | 0.0 | 0.0 | 0.0 | 0.0 | 0.0 | 0.0 | 0.2 | 0.2 | 0.0 | 0.0 | 0.3 | 0.1 | 0.3 | 0.2 | 0.1 | 0.0 |
| lb/min Hg | 0.0 | 0.0 | 0.0 | 0.0 | 0.0 | 0.0 | 0.0 | 0.0 | 0.0 | 0.0 | 0.0 | 0.0 | 0.0 | 0.0 | 0.0 | 0.0 | 0.0 |
| lb/min subtotal solids | 0.0 | 4.0 | 4.0 | 2.0 | 38.7 | 0.0 | 38.7 | 799.1 | 837.9 | 832.3 | 793.5 | 1,219.6 | 381.7 | 1,057.5 | 799.1 | 258.4 | 0.0 |
| lb/min total | 237.6 | 2,245.8 | 2,245.8 | 1,122.9 | 149.2 | 0.0 | 149.2 | 1,926.9 | 2,076.2 | 3,206.2 | 3,057.0 | 3,021.9 | 945.7 | 2,549.9 | 1,926.9 | 623.0 | 0.0 |
| wt % moisture | - | | | - | - | - | - | | | - | | | | | | | |
| wt% solids | - | 0.2 | 0.2 | 0.2 | 26 | 0 | 26 | 41 | 40 | 26 | 26 | 40 | 40 | 41 | 41 | 41 | 5 |
| GPM | 28.5 | 269.3 | 269.3 | 134.7 | 15.1 | 0.0 | 15.1 | 173.8 | 188.9 | 325.0 | 309.9 | 275.0 | 86.1 | 230.0 | 173.8 | 56.2 | 0.0 |
| GPM - Design | 475.0 | 360.0 | 360.0 | 180.0 | 85.0 | 85.0 | 170.0 | 210.0 | 190.0 | 325.0 | 325.0 | 275.0 | 275.0 | 230.0 | 430.0 | 230.0 | 200.0 |
| Specific Gravity | 1.00 | 1.00 | 1.00 | 1.00 | 1.18 | 1.18 | 1.18 | 1.33 | 1.32 | 1.18 | 1.18 | 1.32 | 1.32 | 1.33 | 1.33 | 1.33 | 1.03 |
| Temperature | 60 | 60 | 86 | 86 | 120 | 120 | 120 | 91 | 93 | 120 | 120 | 93 | 93 | 91 | 91 | 91 | 60 |
| pH | Later | 4 - 10 | 4 - 10 | 4 - 10 | 12 | 12 | 12 | 10 - 12 | 10 - 12 | 12 | 12 | 10 - 12 | 10 - 12 | 10 - 12 | 10 - 12 | 10 - 12 | 10-12 |

| | S1 Total Pebble Lime (2 units) | S2.1 Unit 1 SDA Discharge | S3.1 Unit 1 FF Discharge | S4.1 Unit 1 Recycle Solids from Bin | S2.1+S3.1 Unit 1 Total Recycle Solids | S5.1 Unit 1 Total Solids Disposal | S6.1 Unit 1 Over Size Recycle Solids |
|---|---|---|---|---|---|---|---|
| Control Mode | Batch On/Off | Continious | Continious | Batch Variable | - | Continious | Batch On/Off |
| lb/min H2O | 0.0 | 2.7 | 15.5 | 9.2 | 11.9 | 6.3 | 0.5 |
| lb/min CaO (available) | 51.7 | 3.6 | 20.2 | 12.0 | 15.6 | 8.2 | 0.0 |
| lb/min CaO (unavailable) | 0.0 | 27.3 | 154.6 | 91.6 | 118.9 | 63.0 | 0.2 |
| lb/min Ca(OH)2 | 0.0 | 4.3 | 17.7 | 10.5 | 14.8 | 7.2 | 0.0 |
| lb/min CaSO3°1/2H2O | 0.0 | 22.9 | 139.0 | 82.4 | 105.3 | 56.7 | 0.2 |
| lb/min CaSO4 | 0.0 | 46.8 | 264.6 | 156.7 | 203.6 | 107.8 | 0.4 |
| lb/min CaCl2 | 0.0 | 8.9 | 52.9 | 31.4 | 40.3 | 21.6 | 0.1 |
| lb/min CaF2 | 0.0 | 0.4 | 2.2 | 1.3 | 1.7 | 0.9 | 0.0 |
| lb/min Inerts | 9.1 | 8.9 | 50.6 | 30.0 | 38.9 | 20.6 | 0.1 |
| lb/min ash/unburned fuel | 0.0 | 58.0 | 328.8 | 194.8 | 252.8 | 134.0 | 0.5 |
| lb/min Pb | 0.0 | 0.05 | 0.30 | 0.18 | 0.23 | 0.12 | 0.0 |
| lb/min Hg | 0.00E+00 | 4.09E-04 | 7.08E-04 | 4.20E-04 | 8.29E-04 | 2.89E-04 | 4.14E-06 |
| lb/min subtotal solids | 60.8 | 181.3 | 1,030.9 | 610.8 | 792.1 | 420.1 | 1.6 |
| lb/min total | 60.8 | 184.0 | 1,046.4 | 620.0 | 804.0 | 426.4 | 2.1 |
| Design lb/min Total | 1,000.0 | 200.0 | 1,140.0 | 800.0 | 1,000.0 | 1,140.0 | 5.0 |
| Bulk Density lb/ft3 | 55.0 | 30.0 | 30.0 | 30.0 | 30.0 | 30.0 | 60.0 |
| Temperature deg F] | 80.0 | 155.0 | 155.0 | 130.0 | - | 130.0 | 60.0 |
| wt % moisture | - | 1.5% | 1.5% | 1.5% | 1.5% | 1.5% | 25.0% |
| wt% solids | 100% | 98.5% | 98.5% | 98.5% | 98.5% | 98.5% | 75.0% |

**Data Shown is Time Averaged except for "Design" Values**



CRA33213 28-OCT-2002 12:00:01

P062713.62.0200.05-C4001 0026 St:NE 08/03/00 MM-00732

CRA33213 28-OCT-2002 11:59:34

**Foster Wheeler USA Corporation**
**JEA Northside Units 1&2 Repowering Project**

**WAPC Contract 3847**
**June 2, 2000**
**Rev #3**

**100% MCR; COAL: PEFROMANCE; 85% FB REM; 25% of CaO in fly ash is available**
**30 Deg F Approach Temperature**

| | LS1 H2O to Mill | LS2 H2O to Vent Scrubber | LS3 Mill Recycle Pump Discharge | LS4 Mill OverFlow | LS5 Vent Scrubber Drain | LS6 Mill Seperator Tank discharge | LS7 Lime Slurry Transfer Pump Out | LS8.1 Lime Slurry to Unit 1 Lime Slurry Storage Tank | LS8.2 Lime Slurry to Unit 2 Lime Slurry Storage Tank | LS9 Lime Slurry Transfer Pump Return |
|---|---|---|---|---|---|---|---|---|---|---|
| Control Mode | Batch | Batch | Batch | Batch | Batch | Batch | Continious | Batch | Batch | Batch |
| lb/min H2O | 236.3 | 1.2 | 10,957 | 11,178 | 1.2 | 221.0 | 4,383 | 110.5 | 110.5 | 4,161.7 |
| lb/min CaO (available) | | | 0 | 0 | | 0.0 | 0 | 0.0 | 0.0 | 0.0 |
| lb/min CaO (unavailable) | | | 0 | 0 | | 0.0 | 0 | 0.0 | 0.0 | 0.0 |
| lb/min Ca(OH)2 | | | 3,389 | 3,457 | | 68.3 | 1,355 | 34.2 | 34.2 | 1,287.1 |
| lb/min CaSO3°1/2H2O | | | 0 | 0 | | 0.0 | 0 | 0.0 | 0.0 | 0.0 |
| lb/min CaSO4 | | | 0 | 0 | | 0.0 | 0 | 0.0 | 0.0 | 0.0 |
| lb/min CaCl2 | | | 0 | 0 | | 0.0 | 0 | 0.0 | 0.0 | 0.0 |
| lb/min CaF2 | | | 0 | 0 | | 0.0 | 0 | 0.0 | 0.0 | 0.0 |
| lb/min Inerts | | | 453 | 462 | | 9.1 | 181 | 4.6 | 4.6 | 171.9 |
| lb/min ash/unburned fuel | | | 0 | 0 | | 0.0 | 0 | 0.0 | 0.0 | 0.0 |
| lb/min Pb | | | 0 | 0 | | 0.0 | 0 | 0.0 | 0.0 | 0.0 |
| lb/min Hg | | | 0 | 0 | | 0.0 | 0 | 0.0 | 0.0 | 0.0 |
| lb/min subtotal solids | 0.0 | 0.0 | 3,841 | 3,919 | 0.0 | 77.5 | 1,536.5 | 38.7 | 38.7 | 1,459.0 |
| lb/min total | 236.3 | 1.0 | 14,798 | 15,096 | 1.2 | 298.4 | 5,919.2 | 149.2 | 149.2 | 5,620.7 |
| wt % moisture | - | - | - | - | - | - | - | - | - | - |
| wt% solids | - | - | 26% | 26% | - | 26% | 26% | 26% | 26% | 26% |
| GPM | 28.4 | 0.2 | 1500 | 1530.3 | 0.2 | 30.3 | 600.0 | 15.1 | 15.1 | 569.7 |
| GPM - Design | 475.0 | 1.0 | 1500 | 2000.0 | 1.0 | 500.0 | 600.0 | 600.0 | 600.0 | 600.0 |
| Specific Gravity | 1.00 | 1.00 | 1.18 | 1.18 | 1.00 | 1.18 | 1.18 | 1.18 | 1.18 | 1.18 |
| Temperature | 60 | 60 | 160 | 160 | 60 | 160 | 140 | 140 | 140 | 140 |
| pH | Later | Later | 12.5 | 12.5 | Later | 12.5 | 12.5 | 12.5 | 12.5 | 12.5 |

| | | CW1 Air Compressor Glycol/Air Cooler Inlet | CW2 Air Compressor After Cooler Glycol Inlet | CW3 Air Compressor Inter Cooler Glycol Inlet | CW4 Glycol/Water Circulating Pump Inlet | CW5 Glycol/Water Circulating Pump Outlet |
|---|---|---|---|---|---|---|
| Control Mode | | Continious | Continious | Continious | Continious | Continious |
| lb/min H2O | H2O | 4,118 | 1,078 | 3,041 | 4,118 | 4,118 |
| lb/min CaO (available) | (CH2)2(OH)2 | 1,030 | 269 | 760 | 1,030 | 1,030 |
| lb/min CaO (unavailable) | | | | | | |
| lb/min Ca(OH)2 | | | | | | |
| lb/min CaSO3°1/2H2O | | | | | | |
| lb/min CaSO4 | | | | | | |
| lb/min CaCl2 | | | | | | |
| lb/min CaF2 | | | | | | |
| lb/min Inerts | | | | | | |
| lb/min ash/unburned fuel | | | | | | |
| lb/min Pb | | | | | | |
| lb/min Hg | | | | | | |
| lb/min subtotal solids | | | | | | |
| lb/min total | | 5,148 | 1,347 | 3,801 | 5,148 | 5,148 |
| wt % moisture | | | | | | |
| wt% solids | | | | | | |
| GPM | | 600 | 157 | 443 | 600 | 600 |
| GPM - Design | | 600 | 200 | 500 | 600 | 600 |
| Specific Gravity | | 1.03 | 1.03 | 1.03 | 1.03 | 1.03 |
| Temperature | | 111 | 104 | 104 | 123 | 123 |
| pH | | - | - | - | - | |

| | CA1 Total Compressor Output | F3 Total Atomizing Air | IA1 Compressed Air to Air Dryer | IA2.1 Pulse Air to Unit 1 | IA3 Instrument Air |
|---|---|---|---|---|---|
| Control Mode | Continious Variable | On/Off | Continious Variable | Continious Variable | Continious Variable |
| lb/min O2 | 151.1 | 138.0 | 13.0 | 6.2 | 0.8 |
| lb/min N2 | 435.2 | 397.6 | 37.6 | 17.8 | 2.2 |
| lb/min H2O | 0.3 | 3.0 | 0.0 | 0.0 | 0.0 |
| lb/min subtotal | 586.6 | 538.7 | 50.6 | 24.0 | 3.0 |
| SCFM | 7,880 | 7,200 | 680 | 320 | 40 |
| SCFM -Design | 9,000 | 7,200 | 900 | 430 | 40 |
| vol % O2 | 23.09 | 23.09 | 23.09 | 23.30 | 23.30 |
| vol % N2 | 76.01 | 76.01 | 76.01 | 76.70 | 76.70 |
| vol % H2O | 0.09 | 0.09 | 0.09 | 0.00 | 0.00 |
| Tdb deg F | 120 | 120 | 120 | 120 | 120 |
| Twb deg F | 120 | 120 | 120 | | |
| Tdp deg F | 120 | 120 | 120 | -30 | -30 |
| PSIG | 110 | 110 | 100 | 80 | 80 |

**Data Shown is Time Averaged except for "Design" Values**



P062713.62.0200.05-C4001 0027 St:NE 08/03/00 MM-00732

CRA33213 11-SEP-2002 14:16:49

3847-3-002

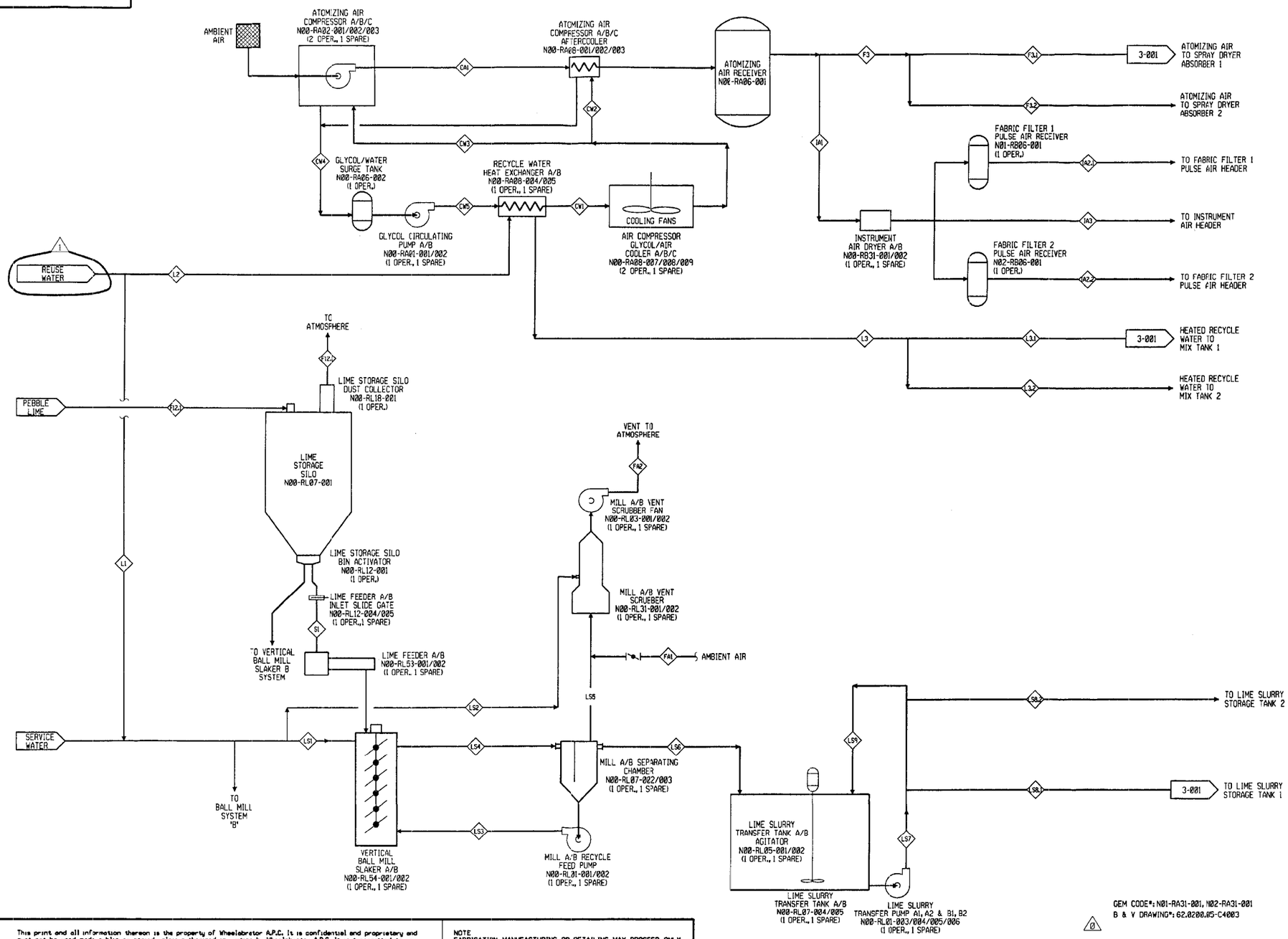


NOTES:

1. EQUIPMENT & SPARE(S) ARE COMMON TO BOTH UNITS.

This print and all information thereon is the property of Wheelabrator A.P.C. It is confidential and proprietary and must not be used, made public, or copied unless authorized in writing by Wheelabrator A.P.C. It is transmitted to you with the explicit understanding that it is subject to return upon request.

NOTE
FABRICATION, MANUFACTURING, OR DETAILING MAY PROCEED ONLY WHEN DRAWING IS ISSUED OR AUTHORIZED FOR SUCH PURPOSES.

| NO. | REVISION | DWN. / CK. | DATE |
|---|---|---|---|
| B | REVISED AS NOTED | JEO | 11-8-99 |
| C | REVISED AS NOTED | MEC | 1-18-00 |
| D | REVISED AS NOTED | JEO | 3-15-00 |
| 0 | | JEO | 7-20-00 |
| 1 | REVISED AS NOTED | RWK | 12-7-00 |

| NO. | REVISION | DWN. / CK. | DATE |
|---|---|---|---|
| | | | |

ISSUE RECORD

| REV. | DATE | TO | FOR |
|---|---|---|---|
| A | 9-24-99 | FOSTER WHEELER | APPROVAL |
| B | 11-8-99 | FOSTER WHEELER | APPROVAL |
| C | 1-18-00 | FOSTER WHEELER | APPROVAL |
| D | 3-15-00 | FOSTER WHEELER | APPROVAL |
| 0 | 7-20-00 | FOSTER WHEELER | CONSTRUCTION |
| 1 | 12-3-00 | FOSTER WHEELER | CONSTRUCTION |

| REV. | DATE | TO | FOR |
|---|---|---|---|
| | | | |

| REV. | DATE | TO | FOR |
|---|---|---|---|
| | | | |

| | | | |
|---|---|---|---|
| DRN. BY | JRU | DATE | 04-27-99 |
| CHKD. BY | | DATE | |
| APPVD. BY | PHP | DATE | 7-20-00 |
| SCALE | NONE | | |
| CERTIFIED BY: | | DATE: | |

FOSTER WHEELER
JACKSONVILLE ELECTRIC AUTHORITY
UNIT #1 & #2 REPOWERING PROJECT

PROCESS FLOW DIAGRAM
SHEET #2 OF 2

Wheelabrator Air Pollution Control
A Waste Management Company

DRAWING NUMBER 3847-3-002 REV. NO. 1

m:\contract\3847\cad\38473002.dgn

PLOT DATE: 08 DEC 2000 10:48:26
LAST PLOTTED BY: RWK

P062713.62.0200.05-C4003 St:NE 01/19/01 MM-01412

3847-3-100

## VALVE IDENTIFICATION

VALVES ARE IDENTIFIED BY AN ALPHANUMERIC CODE, WHICH IS EXPLAINED BY THE FOLLOWING EXAMPLE:

| VALVE NUMBER | 1" | G | 4 | 1 | N | A |
|---|---|---|---|---|---|---|
| SEE BELOW | (1) | (2) | (3) | (4) | (5) | (6) |

(1) VALVE SIZE

(2) TYPE OF VALVE

- B - BALL
- C - CHECK
- D - DIAPHRAGM
- F - BUTTERFLY
- G - GATE
- H - PINCH
- K - KNIFE GATE
- L - GLOBE
- N - NEEDLE
- P - PLUG
- Y - SPECIAL
- W - STOP CHECK (NON-RETURN)

(3) MATERIAL OF CONSTRUCTION OF BODY

- 0 - BRONZE
- 1 - CAST IRON/DUCTILE IRON
- 2 - RUBBER LINED
- 3 - NI RESIST
- 4 - CARBON STEEL
- 5 - CHROME MOLY
- 6 - FORGED STEEL
- 7 - STAINLESS STEEL
- 8 - PLASTIC, plastic lined
- 9 - SPECIAL

(4) PRESSURE RATING

- 1 - 125, 150, 175, 200
- 2 - 250, 300, 400, 500
- 3 - 600, 800
- 4 - 900, 1000
- 5 - 1500
- 6 - 2500
- 7 - 3000
- 8 - 5000
- 9 - 6000
- 0 - SPECIAL

(5) END CONNECTION

- A - BUTT WELD, SCH 20 BORE
- B - BUTT WELD, SCH 30 BORE
- C - BUTT WELD, STD WT. BORE
- D - BUTT WELD, SCH 40 BORE (USE ONLY ON 12" AND LARGER)
- E - BUTT WELD, XS BORE
- F - BUTT WELD, SCH 60 BORE
- G - BUTT WELD, SCH 80 BORE (USE ONLY ON 10" AND LARGER)
- H - BUTT WELD, SCH 100 BORE
- J - BUTT WELD, SCH 120 BORE
- K - BUTT WELD, SCH 140 BORE
- L - BUTT WELD, SCH 160 BORE
- M - BUTT WELD, XXS BORE
- N - FLANGED
- P - MECHANICAL JOINT
- S - SOCKET WELD
- T - THREADED
- V - LUG
- W - WAFER
- X - SPECIAL

(6) VARIATION IN STYLE, TRIM, ACCESSORIES, ETC. (SEE PIPING SPEC.)

## VALVES

- GATE VALVE
- GATE VALVE NORMALLY CLOSED
- GLOBE VALVE
- GLOBE VALVE NORMALLY CLOSED
- PLUG VALVE
- PLUG VALVE NORMALLY CLOSED
- BALL VALVE
- BALL VALVE NORMALLY CLOSED
- DIAPHRAM VALVE
- DIAPHRAM VALVE NORMALLY CLOSED
- PINCH VALVE
- PINCH VALVE NORMALLY CLOSED
- BUTTERFLY VALVE
- BUTTERFLY VALVE NORMALLY CLOSED (NC)
- KNIFE GATE VALVE
- KNIFE GATE VALVE NORMALLY CLOSED (NC)
- ANGLE VALVE
- ANGLE VALVE NORMALLY CLOSED
- NEEDLE VALVE
- NON-RETURN VALVE
- CHECK VALVE
- RELIEF VALVE
- SPECIALTY VALVE (SP XXX)
- 3-WAY VALVE
- 4-WAY VALVE

## PIPING IDENTIFICATION

PIPE LINE NUMBERS CONSIST OF AN ALPHANUMERIC CODE WHICH IS EXPLAINED IN THE FOLLOWING EXAMPLE.

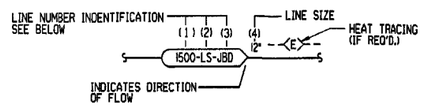


| 1500 | LS | JBD | 12" |
|---|---|---|---|
| (1) | (2) | (3) | (4) |
| UNIQUE LINE NUMBER | SERVICE | PIPE SPEC. | SIZE |

INDIVIDUAL SYMBOLS ARE IDENTIFIED AS FOLLOWS:

1. UNIQUE LINE NUMBER - ALL PIPE LINES WILL BE GIVEN A UNIQUE LINE NUMBER, NO TWO LINES IN THE PLANT WILL HAVE THE SAME NUMBER.
2. SERVICE - THIS IS AN ABBREVIATED SYMBOL IDENTIFYING THE MEDIUM FLOWING IN THE PIPE. (SEE BELOW)
3. PIPE MATERIAL SPECIFICATION - THESE THREE LETTERS IDENTIFY PIPE MATERIAL IDENTIFICATIONS, SEE BELOW.
4. SIZE - INDICATES NOMINAL PIPE SIZE. LINE SIZE MAY CHANGE WITHOUT CHANGING THE REMAINDER OF THE LINE NUMBER.

## PIPE MATERIAL SPECIFICATION

### FIRST LETTER - PRESSURE RATING

- A 2650 PSIG @ 1015
- B 2500 ANSI
- C 1500 ANSI
- D 900 ANSI
- E 600 ANSI
- F 400 ANSI
- G 300 ANSI
- H 150 ANSI
- J 125 ANSI
- K 175 ANSI
- L 250 ANSI
- X GRAVITY RATING

### SECOND LETTER - MATERIAL

- A ALLOY STEEL
- B CARBON STEEL
- C AUSTENITIC STEEL-317L
- D COPPER OR BRONZE
- E ALUMINUM
- F CARBON STEEL-CU. BEARING
- G CARBON STEEL-PPL LINED
- H CAST IRON
- I AUSTENITIC STEEL-316L
- K PVC
- L VITRIFIED CLAY PIPE
- M DURIRION
- N CARBON STEEL-GALVANIZED
- P CAST IRON-CEMENT LINED
- R CARBON STEEL-PLASTIC LINED
- S CARPENTER 20 STAINLESS STEEL
- T CARBON STEEL-CEMENT MORTAR LINED SHOP ALLIED
- U CARBON STEEL-CEMENT LINED IN PLACE
- V CARBON STEEL-PLASTIC COATED
- W DUCTILE IRON
- X CARBON STEEL-RUBBER LINED
- Y CARBON STEEL-RUBBER LINED-RUBBER COATED
- Z FIBERGLASS REINFORCED PLASTIC

### THIRD LETTER - APPLICABLE CODES

- D POWER PIPING CODE ANSI B31.1
- F NATIONAL FIRE PROTECTION CODE
- G UNIFORM PLUMBING CODE
- E ASME BOILER & PRESSURE VESSEL CODE SEC. 1, POWER BOILERS
- J AWWA
- P VICTAULIC PRESS FIT

## LIST OF SERVICES AND IDENTIFICATIONS

| SERVICES | FLUID CODE |
|---|---|
| FEED SLURRY | FS |
| LIME SLURRY | LS |
| MILL RECYCLE SLURRY | MS |
| RECYCLE SLURRY | RS |
| AREA SUMPS/DRAINS | DW |
| REUSE WATER | RW |
| SERVICE WATER | SW |
| FLUIDIZING AIR | FA |
| INSTRUMENT AIR | IA |
| ATOMIZING/SERVICE AIR | SA |
| LIME SILO FILL/ASH HANDLING | LA |
| LUBE OIL | LO |
| GLYCOL COOLING WATER | CW |

## PIPING SYMBOLS

- SHOWER
- VENT
- CONCENTRIC REDUCER
- ECCENTRIC REDUCER FOB
- ECCENTRIC REDUCER FOT
- EXPANSION JOINT
- FILTER
- F R L — INLINE FILTER, REGULATOR, LUBRICATOR. (F=FILTER, R=REGULATOR, L=LUBRICATOR)
- DUPLEX STRAINER
- BASKET STRAINER
- Y STRAINER
- TS — TEMPORARY STRAINER
- VENTURI
- SPEC. XXX | SPEC. XXX — PIPE SPEC. OR MATERIAL CHANGE
- OTHERS | WAPC — BOUNDARY LIMIT
- BUILDING WALL LINE
- (E) — HEAT TRACING (ALL HEAT TRACED LINES ARE INSULATED)
- 470* — LINE CONTINUES FROM ANOTHER DRAWING
- 470* — LINE CONTINUES ON ANOTHER DRAWING
- * DENOTES DRAWING NUMBER
- INSULATION
- HOSE CONNECTION
- QUICK DISCONNECT
- U-DRAIN/TRENCH TO SUMP
- FLEXIBLE HOSE
- CLOSED SEWER HUB
- OPEN SEWER HUB
- M — MOTOR
- NUCLEAR SOURCE
- T — TRAP
- INDICATES FURNISHED BY OTHERS
- INDICATES VENDOR FURNISHED ITEM
- INSPECT. LINE BLIND CLOSED
- INSPECT. LINE BLIND OPEN
- MAIN PROCESS LINE
- MAIN PROCESS LINE BY OTHERS
- FUTURE MAIN PROCESS LINE
- AUXILIARY PROCESS & SERVICE LINE
- AUX. PROCESS & SERVICE LINE BY OTHERS
- FUTURE AUX. PROCESS & SERVICE LINE
- PROCESS STREAM IDENTIFICATION

## EQUIPMENT

- GEAR OR ROTARY PUMP/BLOWER NO BUILT IN RELIEF VALVE
- GEAR OR ROTARY PUMP/BLOWER BUILT IN RELIEF VALVE
- CENTRIFUGAL PUMP
- SUMP PUMP
- CENTRIFUGAL FAN
- ELECTRIC HEATER (IN LINE)
- IMMERSION TYPE HEATER
- RECIPROCATING PUMP
- METERING PUMP (PROPORTIONING)
- BLOWER
- CENTRIFUGAL AIR COMPRESSOR
- AXIAL FAN
- HEAT EXCHANGER
- SPRAY NOZZLE HEADER
- SPARGER
- TWO FLUID NOZZLE

## DUCTWORK DESIGNATIONS

- INLET VANES
- LOUVER DAMPER (PARALLEL BLADE)
- LOUVER DAMPER (OPPOSED BLADE)
- DOUBLE LOUVER DAMPER (ONE BLADE MAY BE OPPOSED)
- GUILLOTINE OR SLIDE GATE DAMPER
- BUTTERFLY DAMPER
- POPPET DAMPER
- EXPANSION JOINT

## EQUIPMENT NUMBER

N01-RL01-001

- EQUIPMENT NUMBER
- EQUIPMENT CODE
- SYSTEM CODE
- PLANT AND UNIT CODE

### PLANT & UNIT CODE

- N01 - NORTHSIDE UNIT 1
- N02 - NORTHSIDE UNIT 2
- N00 - NORTHSIDE COMMON

### SYSTEM CODE

- AB - INSTRUMENT AIR
- AC - SERVICE AIR
- BO - GAS FLOW
- LB - CEMS
- RA - SDA
- RB - FABRIC FILTER
- RL - LIME PREP

### EQUIPMENT CODE

- 01- PUMP
- 02- COMPRESSOR
- 03 - FAN/BLOWER
- 05 - MIXER / AGITATOR
- 06 - PRESSURE VESSEL (AIR RECEIVER)
- 07 - NON-PRESSURE VESSEL (TANK)
- 08 - HEAR EXCHANGER / HEATER / COOLER
- 12 - ROTARY VALVE / KNIFE GATES / BIN ACTIVATOR / IMPACTOR / AIRLOCKS
- 18 - DUST COLLECTOR / FILTER / STRAINER
- 31 - SDA / SCRUBBER / AIR DRYER
- 47 - DAMPER
- 53 - CONVEYOR
- 54 - CRUSHER / BALL MILL / DELUMPER

## GENERAL NOTES

1. WHERE REQUIRED ALL PIPING SHALL HAVE HIGH POINT VENT/FLUSH CONNECTIONS, AND LOW POINT DRAINS.
2. PUMP SUCTION VALVES SHALL BE MINIMUM DISTANCE FROM VESSEL.
3. DEAD LEGS IN PIPING CONTAINING SOLIDS WILL BE MINIMIZED.
4. FLUSH CONNECTIONS SHOULD BE LOCATED ON TOP OF HORIZONTAL LINES.
5. ALL ON/OFF 3-WAY AND 4-WAY VALVES ARE SHOWN IN AN ENERGIZED CONDITION.
6. ALL ON/OFF 2-WAY VALVES ARE CLOSED IN THE DE-ENERGIZED CONDITION UNLESS NOTED DIFFERENTLY.

GEM CODE*: N01-RA31-001, N01-RB18-001 THRU 008
N02-RA31-001, N02-RB18-001 THRU 008
B & V DRAWING*: 62.0200.05-C4004

This print and all information thereon is the property of Wheelabrator A.P.C. It is confidential and proprietary and must not be used, made public, or copied unless authorized in writing by Wheelabrator A.P.C. It is transmitted to you with the explicit understanding that it is subject to return upon request.

NOTE
FABRICATION, MANUFACTURING, OR DETAILING MAY PROCEED ONLY WHEN DRAWING IS ISSUED OR AUTHORIZED FOR SUCH PURPOSES.

| NO. | REVISION | DWN. | CHK. | DATE |
|---|---|---|---|---|
| B | REVISED AS NOTED | JEO | | 1-18-00 |
| C | REVISED AS NOTED | JEO | | 3-15-00 |
| 0 | REVISED AS NOTED | JEO | | 7-28-00 |
| 1 | REVISED AS NOTED | RWK | | 12-7-00 |

| NO. | REVISION | DWN. | CHK. | DATE |
|---|---|---|---|---|
| | | | | |

ISSUE RECORD

| REV. | DATE | TO | FOR |
|---|---|---|---|
| A | 11-8-99 | FOSTER WHEELER | APPROVAL |
| B | 1-18-00 | FOSTER WHEELER | APPROVAL |
| C | 3-15-00 | FOSTER WHEELER | APPROVAL |
| 0 | 7-28-00 | FOSTER WHEELER | CONSTRUCTION |
| 0 | 9-8-02 | | ERECTION BID |

| REV. | DATE | TO | FOR |
|---|---|---|---|
| 1 | 12-8-00 | FOSTER WHEELER | CONSTRUCTION |

| REV. | DATE | TO | FOR |
|---|---|---|---|
| | | | |

| | | | |
|---|---|---|---|
| DRN. BY | JEO | DATE | 10-11-99 |
| CHKD. BY | | DATE | |
| APPVD. BY | PHP | DATE | 7-20-00 |
| SCALE | | | |
| CERTIFIED BY: | | DATE: | |

FOSTER WHEELER
JACKSONVILLE ELECTRIC AUTHORITY
UNIT #1 & #2 REPOWERING PROJECT

PIPING & INSTRUMENTATION DIAGRAM
PIPING LEGEND

Wheelabrator Air Pollution Control
A Waste Management Company

DRAWING NUMBER 3847-3-100 REV. NO. 1

m:\contract\3847\cad\38473100.dgn

PLOT DATE: 08 DEC 2000 10:40:26
LAST PLOTTED BY: RWK

CRA33213 29-OCT-2002 07:54:27

P062713.62.0200.05-C4004 St:NE 01/19/01 MM-01412

3847-3-101

## INSTRUMENT IDENTIFICATION LETTERS

| LETTER | FIRST LETTER: MEASURED OR INITIATING VARIABLE | SECOND LETTER: READOUT OR OUTPUT FUNCTION |
|---|---|---|
| A | ANALYSIS | ALARM |
| B | BURNER/COMBUSTION | USER'S CHOICE |
| C | USER'S CHOICE | CONTROL STATION |
| D | DENSITY | |
| E | VOLTAGE | SENSOR (PRIMARY ELEMENT) |
| F | FLOW RATE | |
| G | GROUNDING | GLASS, VIEWING DEVICE |
| H | HAND | |
| I | CURRENT(ELECTRICAL) | INDICATE |
| J | POWER | SCAN |
| K | TIME, TIME SCHEDULE | CONTROL STATION |
| L | LEVEL | LIGHT |
| M | MOISTURE/MOTOR | |
| N | USER'S CHOICE | USER'S CHOICE |
| O | USER'S CHOICE | ORIFICE/RESTRICTION |
| P | PRESSURE/VACUUM | POINT (TEST) CONNECTION |
| Q | QUANTITY | INTEGRATE/TOTALIZE |
| R | RADIATION/RESTRICTION/RELIEF | RECORD |
| S | SPEED/FREQUENCY | SWITCH |
| T | TEMPERATURE | TRANSMITTER |
| U | MULTI-VARIABLE | MULTIFUNCTION |
| V | VIBRATION/MECHANICAL ANALYSIS | VALVE, DAMPER OR LOUVER |
| W | WEIGHT/FORCE/TORQUE | WELL |
| X | UNCLASSIFIED | UNCLASSIFIED |
| Y | EVENT/STATE OR PRESENCE | RELAY OR COMPUTE |
| Z | POSITION/DIMENSION | DAMPER/ACTUATOR FINAL CONTROL ELEMENT |

## GENERAL INSTRUMENT SYMBOL

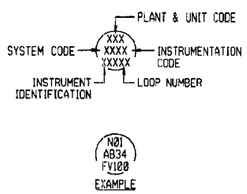


## INSTRUMENT LOCATION IDENTIFICATION

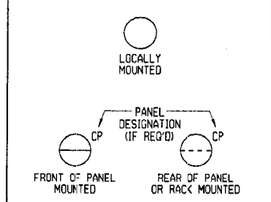


## CONTROL SYSTEM SYMBOLS

- DISCRETE/ANALOG INSTRUMENT OR DEVICE.
- SHARED DISPLAY SHARED CONTROL
- DCS/PLC FUNCTION NOT AVAILABLE TO OPERATOR
- PLC — PROGRAMMABLE LOGIC CONTROL
- DISTRIBUTED CONTROL SYSTEM

## TYPICAL INSTRUMENT LINE IDENTIFICATION

- PROCESS PIPING
- DIRECT CONNECTION TO PROCESS
- PNEUMATIC SIGNAL
- ELECTRICAL SIGNAL
- SOFTWARE LINK OR DATA LINK
- CAPILLARY (FLUID FILLED)
- ELECTROMAGNETIC OR SONIC SIGNAL
- HYDRAULIC SIGNAL
- AIR SUPPLY
- MECHANICAL LINKAGE

## ANALYTICAL

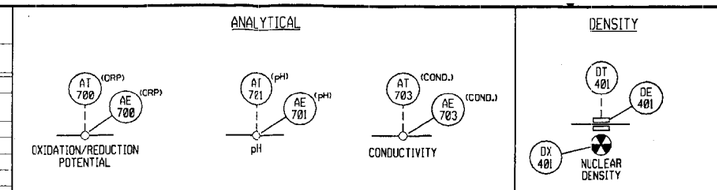


## DENSITY




## FLOW

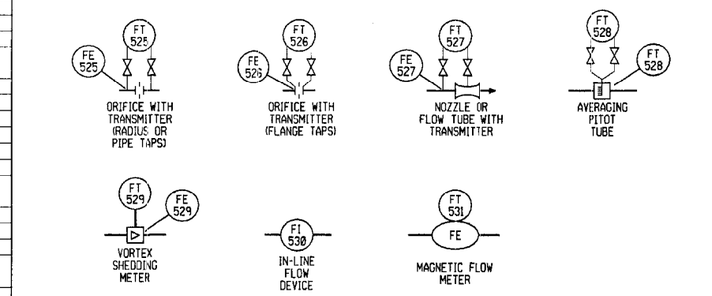


## PRESSURE

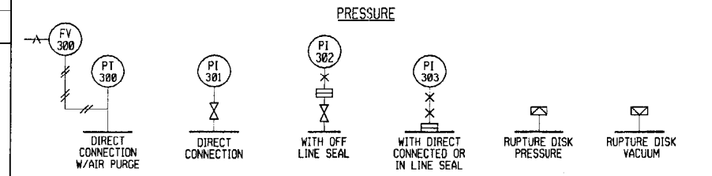


## LEVEL

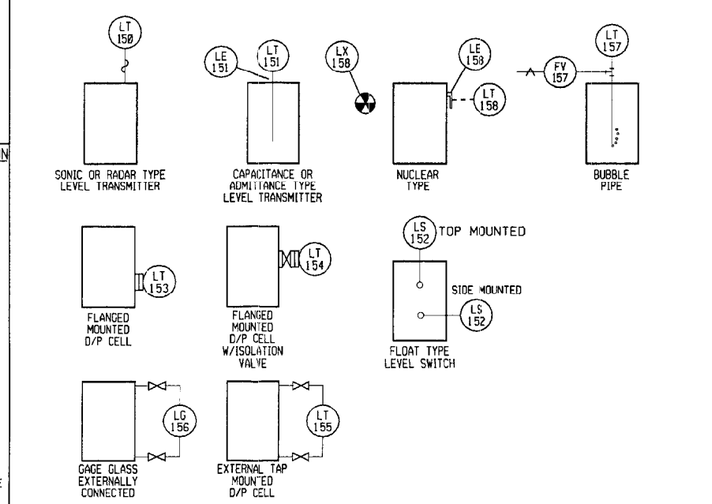


## TEMPERATURE

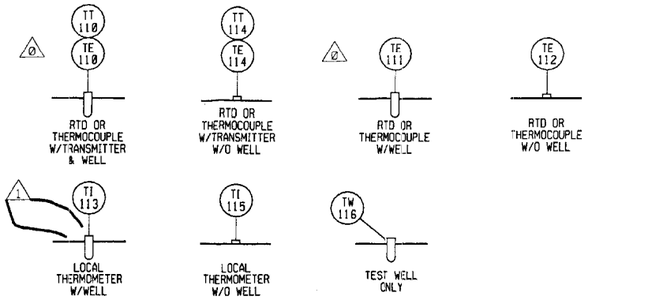


## VALVES

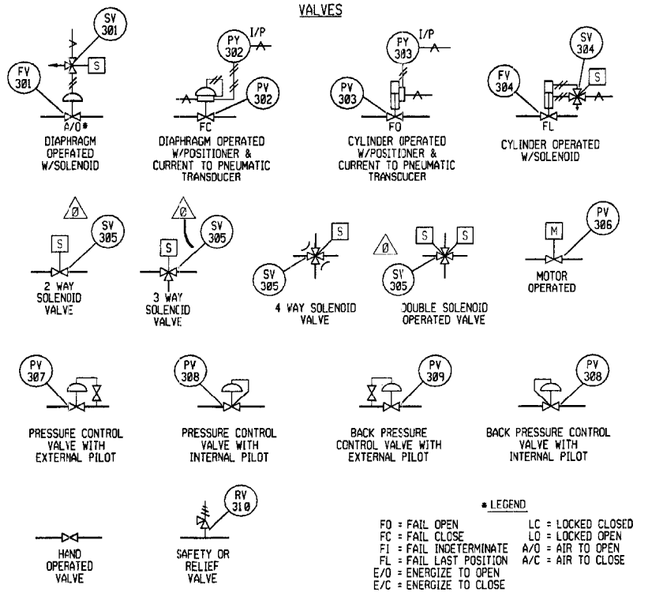


* LEGEND

FO = FAIL OPEN
FC = FAIL CLOSE
FI = FAIL INDETERMINATE
FL = FAIL LAST POSITION
E/O = ENERGIZE TO OPEN
E/C = ENERGIZE TO CLOSE
LC = LOCKED CLOSED
LO = LOCKED OPEN
A/O = AIR TO OPEN
A/C = AIR TO CLOSE

## TYPICAL CONTROL SYSTEM SYMBOLS

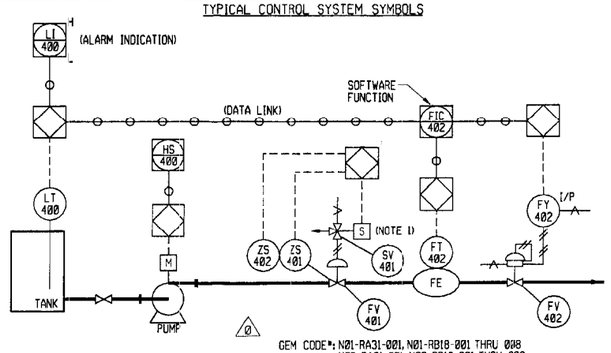


GEM CODE*: N01-RA31-001, N01-RB18-001 THRU 008
N02-RA31-001, N02-RB18-001 THRU 008
B & V DRAWING*: 62.0200.05-C4005

## PLANT & UNIT CODE

N01 - NORTHSIDE UNIT 1
N02 - NORTHSIDE UNIT 2
N00 - NORTHSIDE COMMON

## SYSTEM CODE

AB - INSTRUMENT AIR
AC - SERVICE AIR
BO - GAS FLOW
LB - CEMS
RA - SDA
RB - FABRIC FILTER
RL - LIME PREP

## INSTRUMENTATION CODE

12 - CONTROL VALVE
13 - SOLENOID VALVE
16 - FLOW ORFICE (ORIFICE PLATE)
19 - REGULATOR
34 - ALL OTHER INSTRUMENTATION
47 - DAMPER/REGISTER ASSEMBLE

## GENERAL NOTES

1. ALL PNEUMATIC OPERATED ON/OFF VALVES WILL INCLUDE MANUAL VALVE TRAVEL SPEED CONTROL.

This print and all information thereon is the property of Wheelabrator A.P.C. It is confidential and proprietary and must not be used, made public, or copied unless authorized in writing by Wheelabrator A.P.C. It is transmitted to you with the explicit understanding that it is subject to return upon request.

NOTE
FABRICATION, MANUFACTURING, OR DETAILING MAY PROCEED ONLY WHEN DRAWING IS ISSUED OR AUTHORIZED FOR SUCH PURPOSES.

| NO. | REVISION | DWN. | CHK. | DATE |
|---|---|---|---|---|
| B | REVISED AS NOTED | JEO | | 1-18-00 |
| C | REVISED AS NOTED | JEO | | 3-15-00 |
| D | REVISED AS NOTED | JEO | | 7-20-00 |
| E | REVISED AS NOTED | RWK | | 12-7-00 |

| NO. | REVISION | DWN. | CHK. | DATE |
|---|---|---|---|---|
| | | | | |

ISSUE RECORD

| REV. | DATE | TO | FOR |
|---|---|---|---|
| A | 11-8-99 | FOSTER WHEELER | APPROVAL |
| B | 1-18-00 | FOSTER WHEELER | APPROVAL |
| C | 3-15-00 | FOSTER WHEELER | APPROVAL |
| D | 7-20-00 | FOSTER WHEELER | CONSTRUCTION |
| D | 9-8-00 | | ERECTION BID |

| REV. | DATE | TO | FOR |
|---|---|---|---|
| 1 | 12-8-00 | FOSTER WHEELER | CONSTRUCTION |

| REV. | DATE | TO | FOR |
|---|---|---|---|
| | | | |

DRN. BY JEO DATE 10-11-99
CHKD. BY DATE
APPVD. BY PHP DATE 7-20-00
SCALE
CERTIFIED
BY: DATE:

FOSTER WHEELER
JACKSONVILLE ELECTRIC AUTHORITY
UNIT #1 & #2 REPOWERING PROJECT

PIPING & INSTRUMENTATION DIAGRAM
INSTRUMENTATION & CONTROLS
LEGEND

Wheelabrator Air Pollution Control
A Waste Management Company

DRAWING NUMBER 3847-3-101
REV. NO. 1

m:\contract\3847\cad\38473101.dgn

PLOT DATE: 08 DEC 2000 10:40:33
LAST PLOTTED BY:RWK

CRA33213 28-OCT-2002 12:32:42

P062713.62.0200.05-C4005 St:NE 01/19/01 MM-01412

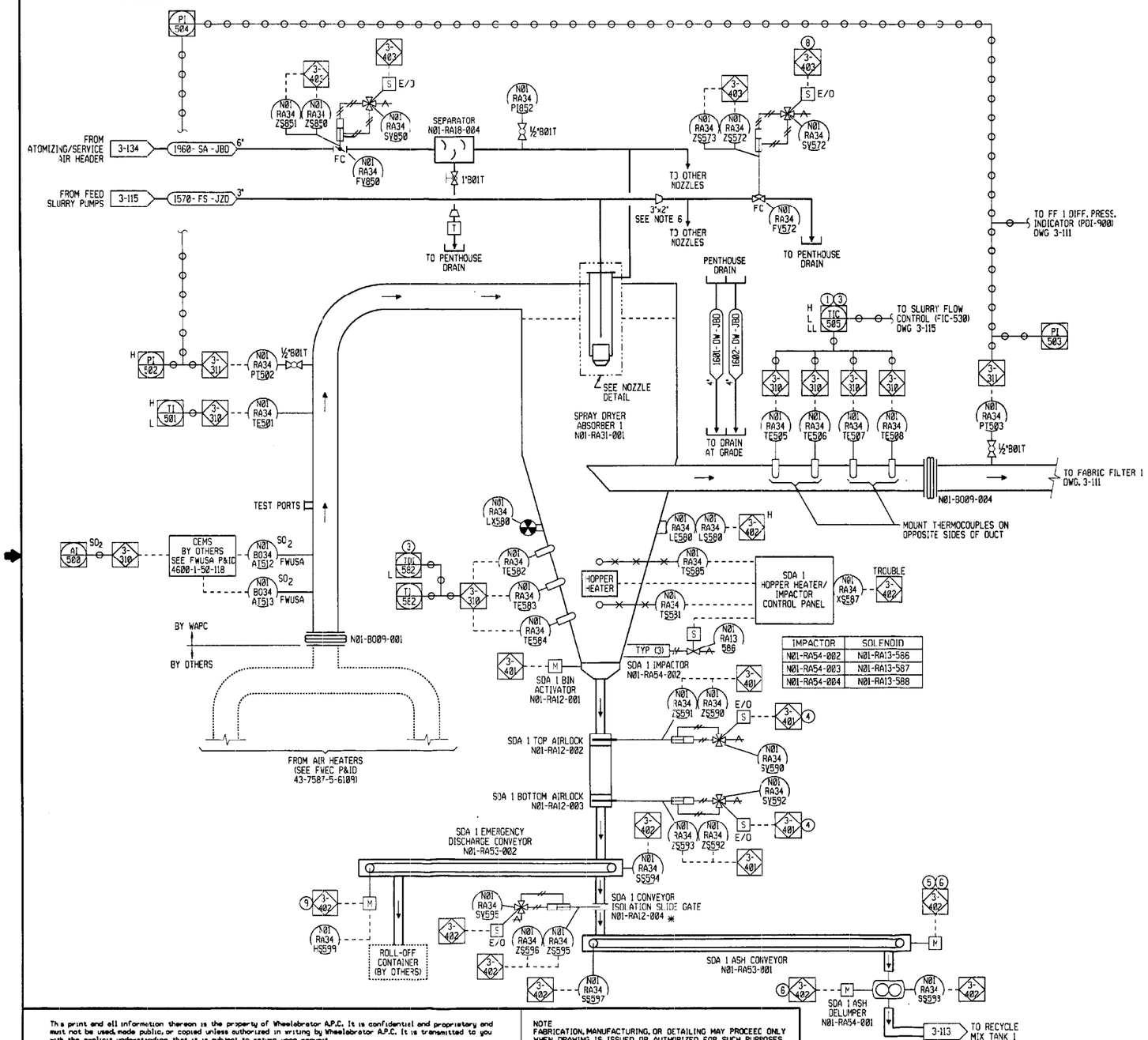


| IMPACTOR | SOLENOID |
|---|---|
| N01-RA54-002 | N01-RA13-586 |
| N01-RA54-003 | N01-RA13-587 |
| N01-RA54-004 | N01-RA13-588 |

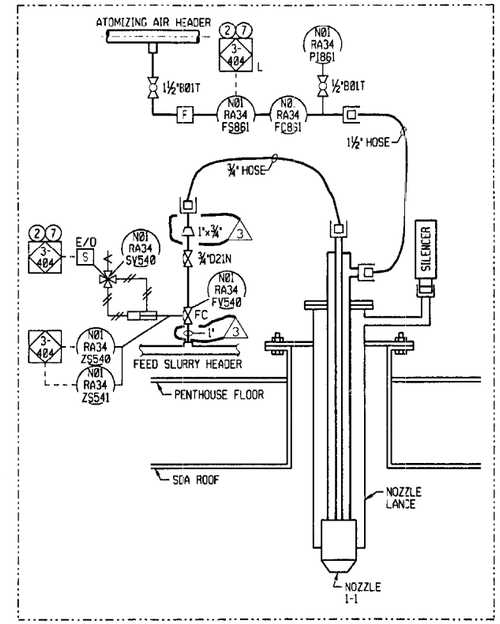


## NOZZLE DETAIL

(TYPICAL 1 OF 16)

## INSTRUMENTATION NOTES:

1. LOW LOW SDA OUTLET TEMPERATURE WILL STOP SLURRY FLOW TO SDA.
2. LOW ATOMIZING AIR FLOW TO NOZZLE WILL CLOSE NOZZLE SLURRY FLOW ISOLATION VALVE
3. TEMP. DIFFERENTIAL BETWEEN HOPPER AND OUTLET IS ALARMED, INDICATING PROBLEM WITH NOZZLES
4. AIRLOCKS ARE AUTOMATICALLY SEQUENCED WHEN ASH CONVEYOR IS RUNNING.
5. ASH CONVEYOR WILL TRIP IF RECYCLE STORAGE TANK OR RECYCLE MIX TANK IS HIGH HIGH LEVEL.
6. DELUMPER MUST BE OPERATING FOR ASH CONVEYOR TO START.
7. A MINIMUM OF 8 NOZZLES MUST BE OPERATING.
8. VALVE OPENS WHEN SDA IS DOWN AND HEADER IS FLUSHED.
9. LOCAL JOG SWITCH IS PROVIDED TO POSITION EMER. CONVEYOR DRAG CHAIN SO CLEAR PATH IS PROVIDED THRU EMER. CONVEYOR TO SDA ASH CONVEYOR.

## INSTRUMENT TAG REFERENCE TABLE

| NOZZLE No. | ATOMIZING AIR | | | FEED SLURRY SHUTOFF VALVE | | | |
|---|---|---|---|---|---|---|---|
| | FLOW SW. N01-RA34- | FLOW CONTROLLER N01-RA34- | PRESSURE INDICATOR N01-RA34- | VALVE N01-RA34- | SOLENOID N01-RA34- | OPEN POS. SW. N01-RA34- | CLOSED POS. SW. N01-RA34- |
| 1-1 | FS861 | FC861 | PI861 | FV540 | SV540 | ZS540 | ZS541 |
| 1-2 | FS862 | FC862 | PI862 | FV542 | SV542 | ZS542 | ZS543 |
| 1-3 | FS863 | FC863 | PI863 | FV544 | SV544 | ZS544 | ZS545 |
| 1-4 | FS864 | FC864 | PI864 | FV546 | SV546 | ZS546 | ZS547 |
| 1-5 | FS865 | FC865 | PI865 | FV548 | SV548 | ZS548 | ZS549 |
| 1-6 | FS866 | FC866 | PI866 | FV550 | SV550 | ZS550 | ZS551 |
| 1-7 | FS867 | FC867 | PI867 | FV552 | SV552 | ZS552 | ZS553 |
| 1-8 | FS868 | FC868 | PI868 | FV554 | SV554 | ZS554 | ZS555 |
| 1-9 | FS869 | FC869 | PI869 | FV556 | SV556 | ZS556 | ZS557 |
| 1-10 | FS870 | FC870 | PI870 | FV558 | SV558 | ZS558 | ZS559 |
| 1-11 | FS871 | FC871 | PI871 | FV560 | SV560 | ZS560 | ZS561 |
| 1-12 | FS872 | FC872 | PI872 | FV562 | SV562 | ZS562 | ZS563 |
| 1-13 | FS873 | FC873 | PI873 | FV564 | SV564 | ZS564 | ZS565 |
| 1-14 | FS874 | FC874 | PI874 | FV566 | SV566 | ZS566 | ZS567 |
| 1-15 | FS875 | FC875 | PI875 | FV568 | SV568 | ZS568 | ZS569 |
| 1-16 | FS876 | FC876 | PI876 | FV570 | SV570 | ZS570 | ZS571 |

## NOTES:

1. FOR GENERAL NOTES & LEGEND SEE DWG'S. 3847-3-100 & 101
2. DCS CONTROL SYSTEM IS BY OTHERS.
3. ALL EQUIPMENT, INSTRUMENTS, ETC. SHOWN ON THIS DRAWING ARE FOR UNIT 1 AND ARE TYPICAL FOR UNIT 2. FOR UNIT 2 INSTRUMENT TAG AND EQUIPMENT NUMBERS CHANGE THE PREFIX N01 TO N02. EXAMPLE:
   N01-RA34-FV610 (UNIT 1)
   N02-RA34-FV610 (UNIT 2)
4. ALL OPEN POSITION SW'S & SOLENOIDS TO HAVE THE SAME LOOP NUMBER AS THE DEVICE. ALL CLOSED POSITION SW'S TO HAVE THE NEXT NUMBER IN SEQUENCE.
5. ALL 480V MOTOR DRIVEN EQUIPMENT SHALL HAVE THE FOLLOWING DCS I/O POINTS UNLESS OTHERWISE NOTED:
   START COMMAND [ MOTOR TAG No. ] CSR
   CNTL PWR/RUNNING [ MOTOR TAG No. ] 42A
   CNTL PWR/STOPPED [ MOTOR TAG No. ] 42B
6. LOCATE REDUCER AFTER TENTH NOZZLE TAKEOFF.

* FURNISHED BY ASH TECH WITH DRAG CONVEYORS.

GEM CODE*: N01-RA31-001, N02-RA31-001
B & V DRAWING*: 62.0200.05-C4006

This print and all information thereon is the property of Wheelabrator A.P.C. It is confidential and proprietary and must not be used, made public, or copied unless authorized in writing by Wheelabrator A.P.C. It is transmitted to you with the explicit understanding that it is subject to return upon request.

NOTE
FABRICATION, MANUFACTURING, OR DETAILING MAY PROCEED ONLY WHEN DRAWING IS ISSUED OR AUTHORIZED FOR SUCH PURPOSES.

| NO. | REVISION | DWN. | CHK. | DATE | NO. | REVISION | DWN. | CHK. | DATE |
|---|---|---|---|---|---|---|---|---|---|
| B | REVISED AS NOTED | MEC | | 1-18-00 | 3 | REVISED AS NOTED | RG | | 6-11-01 |
| C | REVISED AS NOTED | RG | | 3-15-00 | | | | | |
| 0 | REVISED AS NOTED | RG | | 7-28-00 | | | | | |
| 1 | REVISED AS NOTED | RWK | | 12-7-00 | | | | | |
| 2 | REVISED AS NOTED | RG | | 2-5-01 | | | | | |

ISSUE RECORD

| REV. | DATE | TO | FOR |
|---|---|---|---|
| A | 11-8-99 | FOSTER WHEELER | APPROVAL |
| B | 1-18-00 | FOSTER WHEELER | APPROVAL |
| C | 3-15-00 | FOSTER WHEELER | APPROVAL |
| 0 | 7-28-00 | FOSTER WHEELER | CONSTRUCTION |
| 2 | 9-8-00 | | ERECTION BID |

| REV. | DATE | TO | FOR |
|---|---|---|---|
| 1 | 12-8-00 | FOSTER WHEELER | CONSTRUCTION |
| 1 | 1-15-01 | PIP. SUB/FIELD | CONSTRUCTION |
| 2 | 2-5-01 | FOSTER WHEELER | CONSTRUCTION |
| 3 | 6-11-01 | FOSTER WHEELER | CONSTRUCTION |

| REV. | DATE | TO | FOR |
|---|---|---|---|
| | | | |

DRN. BY JED DATE 10-11-99
CHKD. BY DATE
APPVD. BY PHP DATE 7-20-00
SCALE
CERTIFIED
BY: DATE:

FOSTER WHEELER
JACKSONVILLE ELECTRIC AUTHORITY
UNIT #1 & #2 REPOWERING PROJECT

PIPING & INSTRUMENTATION DIAGRAM
SPRAY DRYER ABSORBER

Wheelabrator Air Pollution Control
A Waste Management Company

DRAWING NUMBER 3847-3-110 REV. NO. 3

m:\contract\3847 jee\cad\38473110.dgn

PLOT DATE: 11 JUN 2001 15:06:59
LAST PLOTTED BY: JED

CRA33213 28-OCT-2002 12:32:06

P062713.62.0200.05-C4006 St:RD 07/16/01 MM-02052

3847-3-111

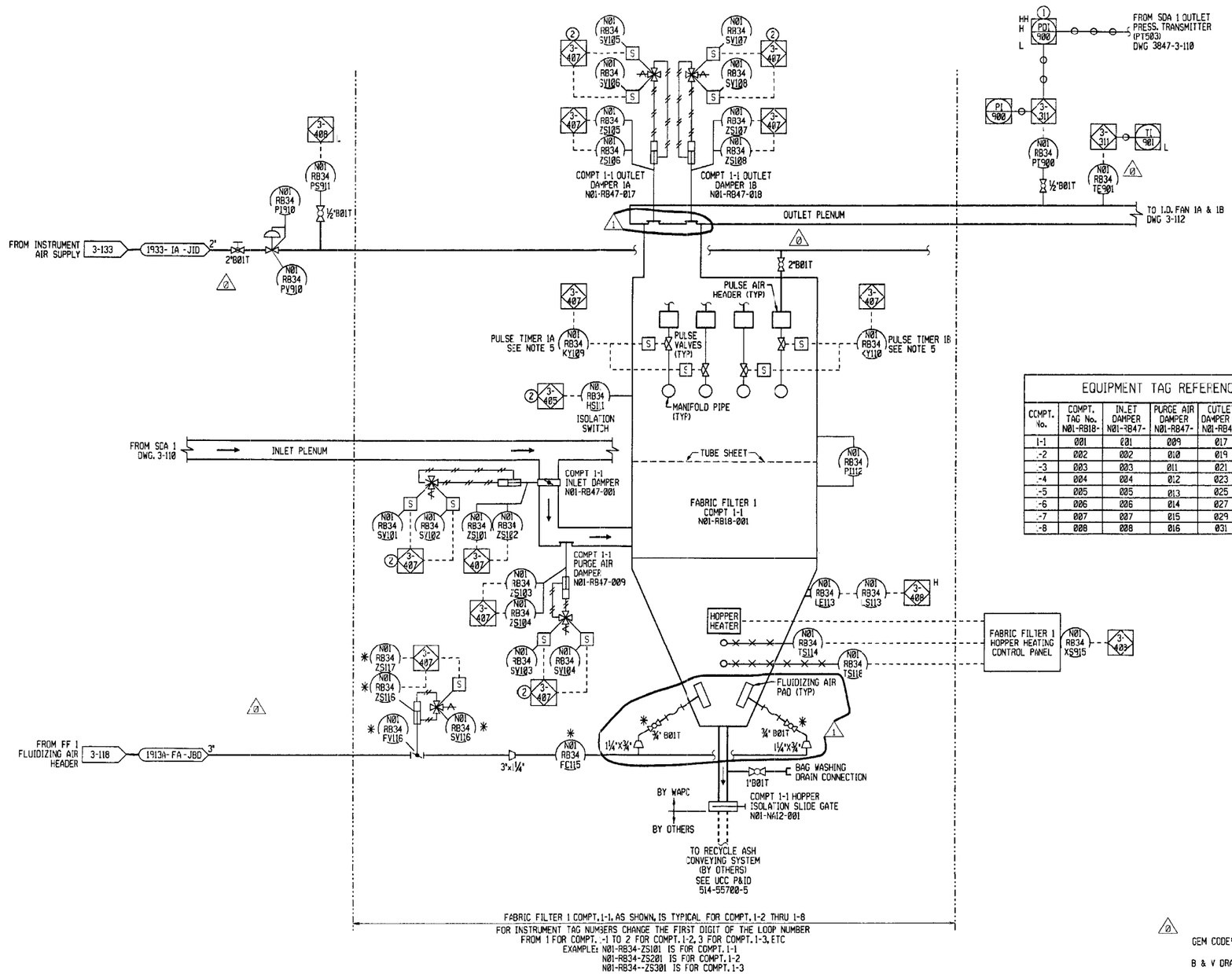


## EQUIPMENT TAG REFERENCE TABLE

| COMPT. No. | COMPT. TAG No. N01-RB18- | INLET DAMPER N01-RB47- | PURGE AIR DAMPER N01-RB47- | OUTLET DAMPER 1A N01-RB47- | OUTLET DAMPER 1B N01-RB47- | ISOLATION SLIDE GATE N01-NA12- |
|---|---|---|---|---|---|---|
| 1-1 | 001 | 001 | 009 | 017 | 018 | 001 |
| -2 | 002 | 002 | 010 | 019 | 020 | 002 |
| -3 | 003 | 003 | 011 | 021 | 022 | 003 |
| -4 | 004 | 004 | 012 | 023 | 024 | 004 |
| -5 | 005 | 005 | 013 | 025 | 026 | 005 |
| -6 | 006 | 006 | 014 | 027 | 028 | 006 |
| -7 | 007 | 007 | 015 | 029 | 030 | 007 |
| -8 | 008 | 008 | 016 | 031 | 032 | 008 |

GEM CODE*: N01-RB18-001 THRU 008
N02-RB18-001 THRU 008
B & V DRAWING*: 62.0200.05-C4007

## INSTRUMENTATION NOTES:

1. HIGH DIFF. PRESSURE ACROSS FABRIC FILTER INITIATES CLEANING CYCLE.
2. ISOLATION SWITCH CLOSES COMPARTMENT INLET AND OUTLET DAMPERS, OPENS THE PURGE AIR DAMPER AND BYPASSES COMPARTMENT FROM THE CLEANING CYCLE.
3. HOPPER ROTARY AIR LOCK AND FLUIDIZING AIR SOLENOID TO BE INTERLOCKED WITH THE RECYCLE ASH CONVEYING SYSTEM.

## NOTES:

1. FOR GENERAL NOTES & LEGEND SEE DWG'S. 3847-3-100 & 101
2. DCS CONTROL SYSTEM IS BY OTHERS.
3. ALL EQUIPMENT, INSTRUMENTS, ETC. SHOWN ON THIS DRAWING ARE FOR UNIT 1 AND ARE TYPICAL FOR UNIT 2. FOR UNIT 2 INSTRUMENT TAG AND EQUIPMENT NUMBERS CHANGE THE PREFIX N01 TO N02. EXAMPLE:
   N01-RA34-FV610 (UNIT 1)
   N02-RA34-FV610 (UNIT 2)
4. ALL DAMPER OPEN POSITION SW'S & SOLENOIDS TO HAVE THE SAME LOOP NUMBER AS THE DEVICE. ALL DAMPER CLOSED POSITION SW'S & SOLENOIDS TO HAVE THE NEXT NUMBER IN SEQUENCE.
5. 2 PULSE TIMERS, 4 PULSE AIR HEADERS AND 52 PULSE VALVES & MANIFOLD PIPES ARE PROVIDED WITH EACH COMPARTMENT.
6. ALL 480V MOTOR DRIVEN EQUIPMENT SHALL HAVE THE FOLLOWING DCS I/O POINTS UNLESS OTHERWISE NOTED:
   START COMMAND [ MOTOR TAG No. ] CSR
   CNTL PWR/RUNNING [ MOTOR TAG No. ] 42A
   CNTL PWR/STOPPED [ MOTOR TAG No. ] 42B
7. * INDICATES EQUIPMENT SUPPLIED BY DELTA DUCON

This print and all information thereon is the property of Wheelabrator A.P.C. It is confidential and proprietary and must not be used, made public, or copied unless authorized in writing by Wheelabrator A.P.C. It is transmitted to you with the explicit understanding that it is subject to return upon request.

NOTE
FABRICATION, MANUFACTURING, OR DETAILING MAY PROCEED ONLY WHEN DRAWING IS ISSUED OR AUTHORIZED FOR SUCH PURPOSES.

| NO. | REVISION | DWN. | CHK. | DATE |
|---|---|---|---|---|
| B | REVISED AS NOTED | JEO | | 1-18-00 |
| C | REVISED AS NOTED | JEO | | 3-15-00 |
| D | REVISED AS NOTED | JEO | | 7-20-00 |
| 1 | REVISED AS NOTED | RWK | | 12-7-00 |

| NO. | REVISION | DWN. | CHK. | DATE |
|---|---|---|---|---|
| | | | | |

ISSUE RECORD

| REV. | DATE | TO | FOR |
|---|---|---|---|
| A | 11-6-99 | FOSTER WHEELER | APPROVAL |
| B | 1-18-00 | FOSTER WHEELER | APPROVAL |
| C | 3-15-00 | FOSTER WHEELER | APPROVAL |
| D | 7-20-00 | FOSTER WHEELER | CONSTRUCTION |
| 0 | 9-8-00 | | ERECTION BID |

| REV. | DATE | TO | FOR |
|---|---|---|---|
| | | | |

| REV. | DATE | TO | FOR |
|---|---|---|---|
| | | | |

DRN. BY JEO DATE 10-13-99
CHKD. BY DATE
APPVD. BY PHP DATE 7-20-00
SCALE
CERTIFIED
BY: DATE:

FOSTER WHEELER
JACKSONVILLE ELECTRIC AUTHORITY
UNIT #1 & #2 REPOWERING PROJECT
PIPING & INSTRUMENTATION DIAGRAM
FABRIC FILTER

Wheelabrator Air Pollution Control
A Waste Management Company

DRAWING NUMBER 3847-3-111
REV. NO. 1

m:\contract\3847\cad\38473111.dgn

PLOT DATE: 08 DEC 2000 10:40:48
LAST PLOTTED BY: RWK

CRA33213 28-OCT-2002 12:31:12

P062713.62.0200.05-C4007 St:NE 01/19/01 MM-01412

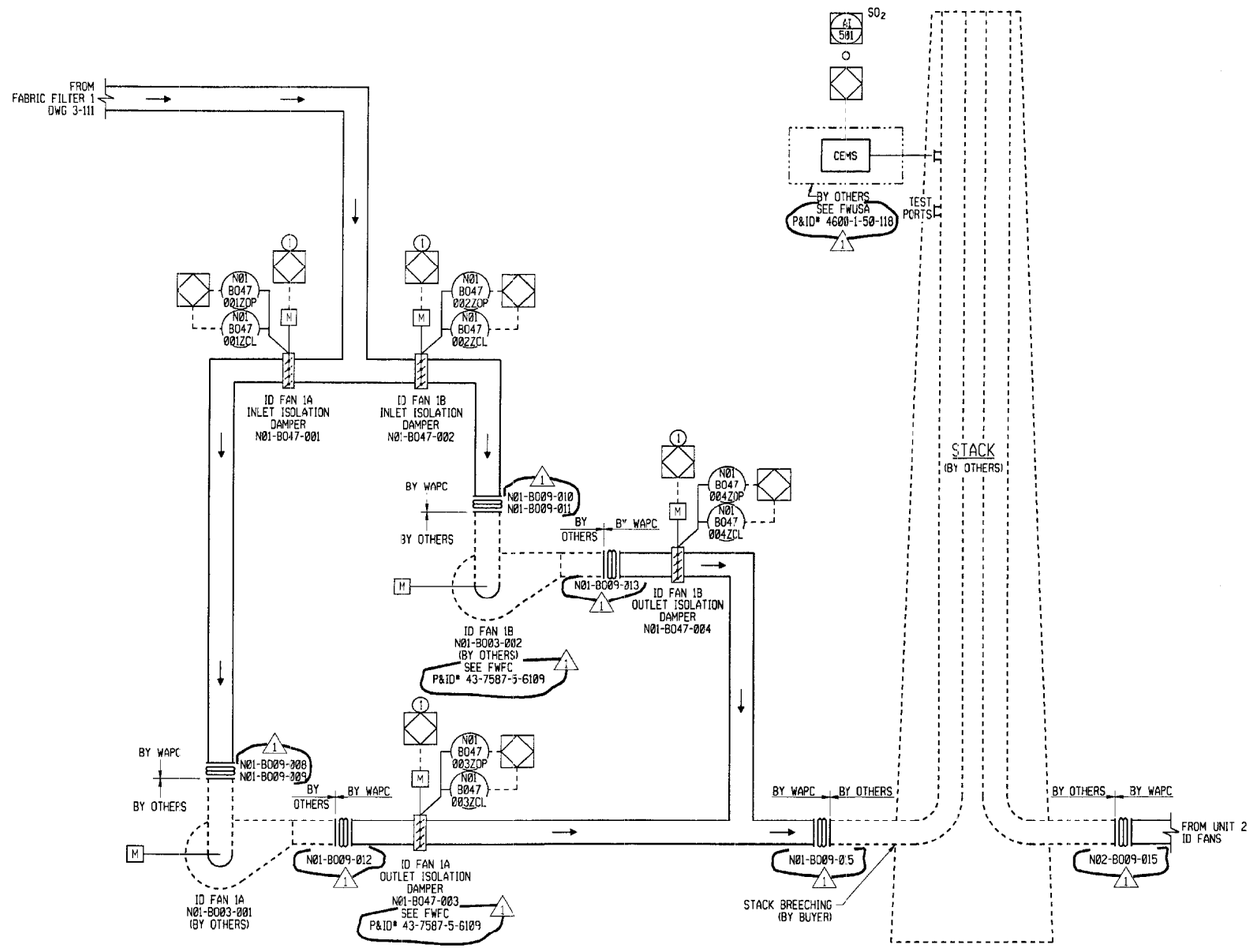


## INSTRUMENTATION NOTES:

1. ID FAN AND FAN INLET & OUTLET ISOLATION DAMPERS ARE CONTROLLED BY COMBUSTION CONTROL LOGIC BY OTHERS.
2. ID FAN AND FAN INLET & OUTLET ISOLATION DAMPER MOTOR CONTROL AND WIRING IS BY OTHERS.

## NOTES:

1. FOR GENERAL NOTES & LEGEND SEE DWG'S. 3847-3-100 & 101.
2. DCS CONTROL SYSTEM IS BY OTHERS.
3. ALL EQUIPMENT, INSTRUMENTS, ETC. SHOWN ON THIS DRAWING ARE FOR UNIT 1 AND ARE TYPICAL FOR UNIT 2. FOR UNIT 2 INSTRUMENT TAG AND EQUIPMENT NUMBERS CHANGE THE PREFIX N01 TO N02. EXAMPLE:
   N01-RA34-FV610 (UNIT 1)
   N02-RA34-FV610 (UNIT 2)
4. ALL OPEN POSITION SW'S & SOLENOIDS TO HAVE THE SAME LOOP NUMBER AS THE DEVICE. ALL CLOSED POSITION SW'S & SOLENOIDS TO HAVE THE NEXT NUMBER IN SEQUENCE.
5. ALL MOTOR OPERATED DAMPERS SHALL HAVE THE FOLLOWING DCS I/O POINTS UNLESS OTHERWISE NOTED:

   DMPR OPEN COMMAND - [ MOTOR TAG No. ] COP
   DMPR CLOSE COMMAND - [ MOTOR TAG No. ] CCL
   DMPR FULL OPEN - [ VALVE TAG No. ]-ZOP
   DMPR FULL CLOSED - [ VALVE TAG No. ]-ZCL
   DMPR RUNNING TO OPEN - [ VALVE TAG No. ]-42F
   DMPR RUNNING TO CLOSE - [ VALVE TAG No. ]-42R
   DMPR CNTL PWR/OL - [ VALVE TAG No. ]-BPA

GEM CODE#: N01 - RA, RB

B & V DRAWING#: 62.0200.05-C4008

This print and all information thereon is the property of Wheelabrator A.P.C. It is confidential and proprietary and must not be used, made public, or copied unless authorized in writing by Wheelabrator A.P.C. It is transmitted to you with the explicit understanding that it is subject to return upon request.

NOTE
FABRICATION, MANUFACTURING, OR DETAILING MAY PROCEED ONLY WHEN DRAWING IS ISSUED OR AUTHORIZED FOR SUCH PURPOSES.

| NO. | REVISION | DWN. | CHK. | DATE |
|---|---|---|---|---|
| B | REVISED AS NOTED | JEO | | 1-18-00 |
| A | REVISED AS NOTED | JEO | | 7-20-00 |
| 1 | REVISED AS NOTED | DD | | 12-7-00 |

| NO. | REVISION | DWN. | CHK. | DATE |
|---|---|---|---|---|
| | | | | |

ISSUE RECORD

| REV. | DATE | TO | FOR |
|---|---|---|---|
| A | 11-8-99 | FOSTER WHEELER | APPROVAL |
| B | 1-18-00 | FOSTER WHEELER | APPROVAL |
| 0 | 7-20-00 | FOSTER WHEELER | CONSTRUCTION |
| 0 | 9-8-00 | | ERECTION BID |
| 1 | 12-8-00 | FOSTER WHEELER | CONSTRUCTION |

| REV. | DATE | TO | FOR |
|---|---|---|---|
| | | | |

| REV. | DATE | TO | FOR |
|---|---|---|---|
| | | | |

| | | | |
|---|---|---|---|
| DRN. BY | JEO | DATE | 10-11-99 |
| CHKD. BY | | DATE | |
| APPVD. BY | PHP | DATE | 7-20-00 |
| SCALE | | | |
| CERTIFIED | | | |
| B"; | | DATE: | |

FOSTER WHEELER
JACKSONVILLE ELECTRIC AUTHORITY
UNIT #1 & #2 REPOWERING PROJECT

PIPING & INSTRUMENTATION DIAGRAM
I.D. FAN & STACK

Wheelabrator Air Pollution Control
A Waste Management Company

DRAWING NUMBER 3847-3-112 REV. NO. 1

m:\contract\3847\cad\38473112.dgn

PLOT DATE: 08 DEC 2000 10:40:54
LAST PLOTTED BY: RWK

CRA33213 28-OCT-2002 12:30:37

P062713.62.0200.05-C4008 St:NE 01/19/01 MM-01412

CRA33213 28-OCT-2002 12:30:00

3847-3-113

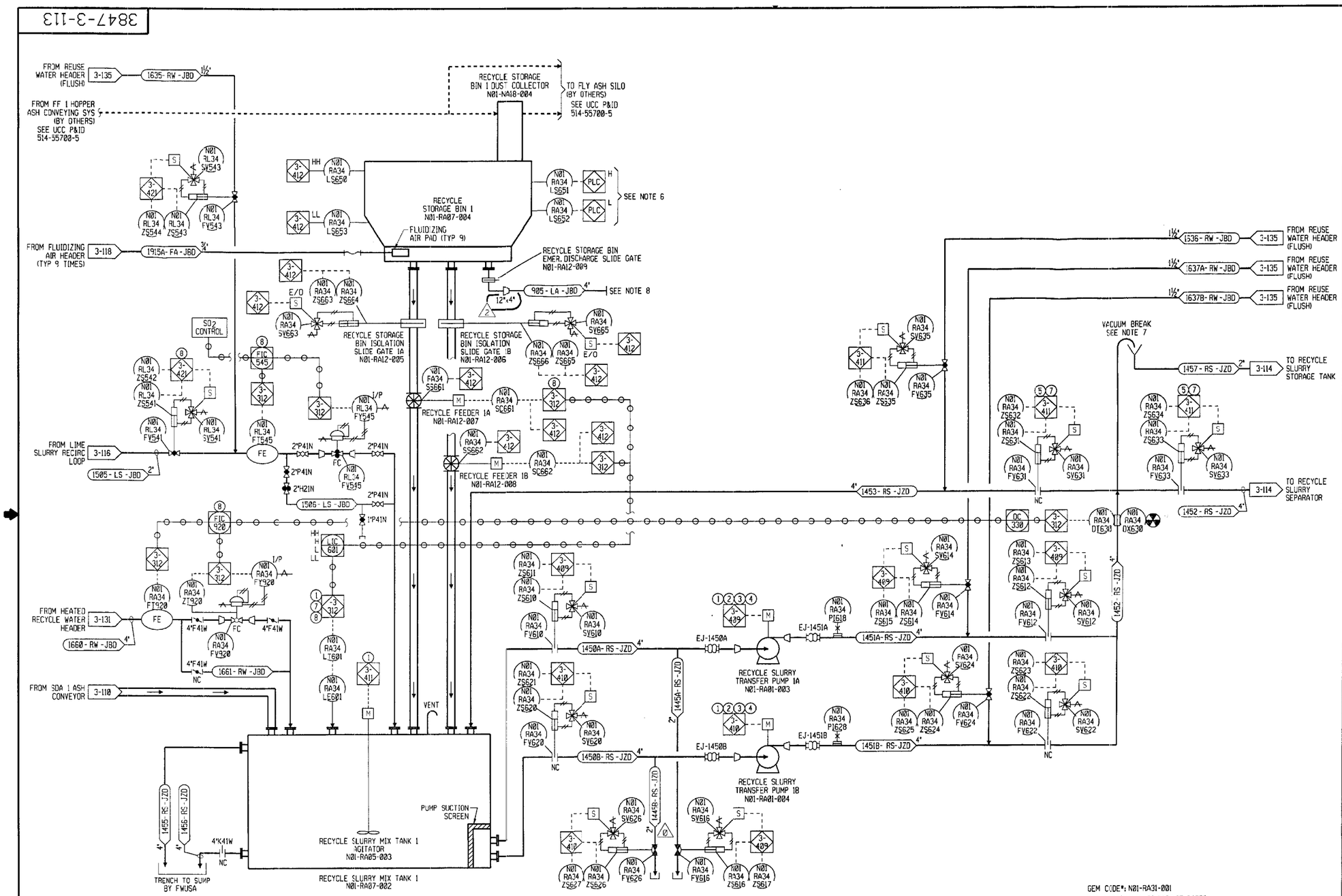


GEM CODE*: N01-RA31-001
B & V DRAWING*: 62.0200.05-C4009

## INSTRUMENTATION NOTES:

1. LOW LOW TANK LEVEL TRIPS PUMPS & AGITATOR
2. AUTOMATIC PUMP START SEQUENCE WILL FIRST FULLY OPEN SUCTION VALVE. AFTER VALVE IS OPEN THE PUMP WILL START AND THE DISCHARGE VALVE WILL AUTOMATICALLY OPEN.
3. PUMP IS AUTOMATICALLY FLUSHED AND DRAINED WHEN PUMP IS STOPPED.
4. STANDBY PUMP WILL AUTOMATICALLY START WHEN OPERATING PUMP TRIPS.
5. LINE IS FLUSHED WHEN ISOLATION VALVE IS CLOSED.
6. LOW BIN LEVEL WILL DIRECT FABRIC FILTER ASH TO THE RECYCLE BIN. HIGH BIN LEVEL DIRECT FABRIC FILTER ASH TO THE FLY ASH SILO BY OTHERS.
7. LOW LEVEL IN TANK WILL RECIRCULATE SLURRY BACK TO TANK. HIGH LEVEL WILL PUMP SLURRY TO STORAGE TANK.
8. HIGH HIGH LEVEL IN MIX TANK OR RECYCLE SLURRY STORAGE TANK WILL STOP ALL FEED TO TANK.

## NOTES:

1. FOR GENERAL NOTES & LEGEND SEE DWG'S. 3847-3-100 & 101
2. DCS CONTROL SYSTEM IS BY OTHERS.
3. ALL EQUIPMENT, INSTRUMENTS, ETC. SHOWN ON THIS DRAWING ARE FOR UNIT 1 AND ARE TYPICAL FOR UNIT 2. FOR UNIT 2 INSTRUMENT TAG AND EQUIPMENT NUMBERS CHANGE THE PREFIX N01 TO N02. EXAMPLE:
   N01-RA34-FV610 (UNIT 1)
   N02-RA34-FV610 (UNIT 2)
4. ALL VALVE OPEN POSITION SW'S & SOLENOIDS TO HAVE THE SAME LOOP NUMBER AS THE DEVICE. ALL CLOSED POSITION SW'S TO HAVE THE NEXT NUMBER IN SEQUENCE.
5. ALL 480V MOTOR DRIVEN EQUIPMENT SHALL HAVE THE FOLLOWING DCS I/O POINTS UNLESS OTHERWISE NOTED:
   START COMMAND [MOTOR TAG No.] CSR
   CNTL PWR/RUNNING [MOTOR TAG No.] 42A
   CNTL PWR/STOPPED [MOTOR TAG No.] 42B
6. BIN LEVEL SWITCHES TO BE WIRED TO ASH HANDLING CONTROL SYSTEM BY OTHERS
7. VACUUM BREAK IS OPEN PIPE AT LEAST 3 FT. ABOVE THE HIGH POINT OF PIPING SYSTEM.
8. 4" LINE IS PIPE TO EL. 17'-6 FOR CONNECTION TO TRUCK VACUUM LINE FOR EMER. DISCHARGE.

This print and all information thereon is the property of Wheelabrator A.P.C. It is confidential and proprietary and must not be used, made public, or copied unless authorized in writing by Wheelabrator A.P.C. It is transmitted to you with the explicit understanding that it is subject to return upon request.

NOTE
FABRICATION, MANUFACTURING, OR DETAILING MAY PROCEED ONLY WHEN DRAWING IS ISSUED OR AUTHORIZED FOR SUCH PURPOSES.

| NO. | REVISION | DWN. | CHK. | DATE | NO. | REVISION | DWN. | CHK. | DATE |
|---|---|---|---|---|---|---|---|---|---|
| B | REVISED AS NOTED | JEO | | 1-18-00 | | | | | |
| C | REVISED AS NOTED | JEO | | 3-15-00 | | | | | |
| 0 | REVISED AS NOTED | JEO | | 7-20-00 | | | | | |
| 1 | REVISED AS NOTED | RWK | | 12-7-00 | | | | | |
| 2 | REVISED AS NOTED | JEO | | 2-5-01 | | | | | |

ISSUE RECORD

| REV. | DATE | TO | FOR |
|---|---|---|---|
| A | 11-6-99 | FOSTER WHEELER | APPROVAL |
| B | 1-18-00 | FOSTER WHEELER | APPROVAL |
| C | 3-15-00 | FOSTER WHEELER | APPROVAL |
| 0 | 7-20-00 | FOSTER WHEELER | CONSTRUCTION |
| 0 | 9-5-00 | | ERECTION BID |
| 1 | 12-8-00 | FOSTER WHEELER | CONSTRUCTION |
| 1 | 1-15-01 | PIP, SUB/FIELD | CONSTRUCTION |
| 2 | 2-5-01 | FOSTER WHEELER | CONSTRUCTION |

| | | | |
|---|---|---|---|
| DRN. BY JEO | DATE 10-14-99 | | |
| CHKD. BY | DATE | | |
| APPVD. BY PHP | DATE 7-20-00 | | |
| SCALE | | | |
| CERTIFIED | | | |
| BY: | DATE: | | |

FOSTER WHEELER
JACKSONVILLE ELECTRIC AUTHORITY
UNIT #1 & #2 REPOWERING PROJECT

PIPING & INSTRUMENTATION DIAGRAM
RECYCLE SLURRY
PREPARATION SYSTEM

Wheelabrator Air Pollution Control
A Waste Management Company

DRAWING NUMBER 3847-3-113 REV. NO. 2

m:\contract\3847\cad\38473113.dgn

PLOT DATE: 05 FEB 2001 13:00:19
LAST PLOTTED BY: JEO

P062713.62.0200.05-C4009 St:RD 03/03/01 MM-01611

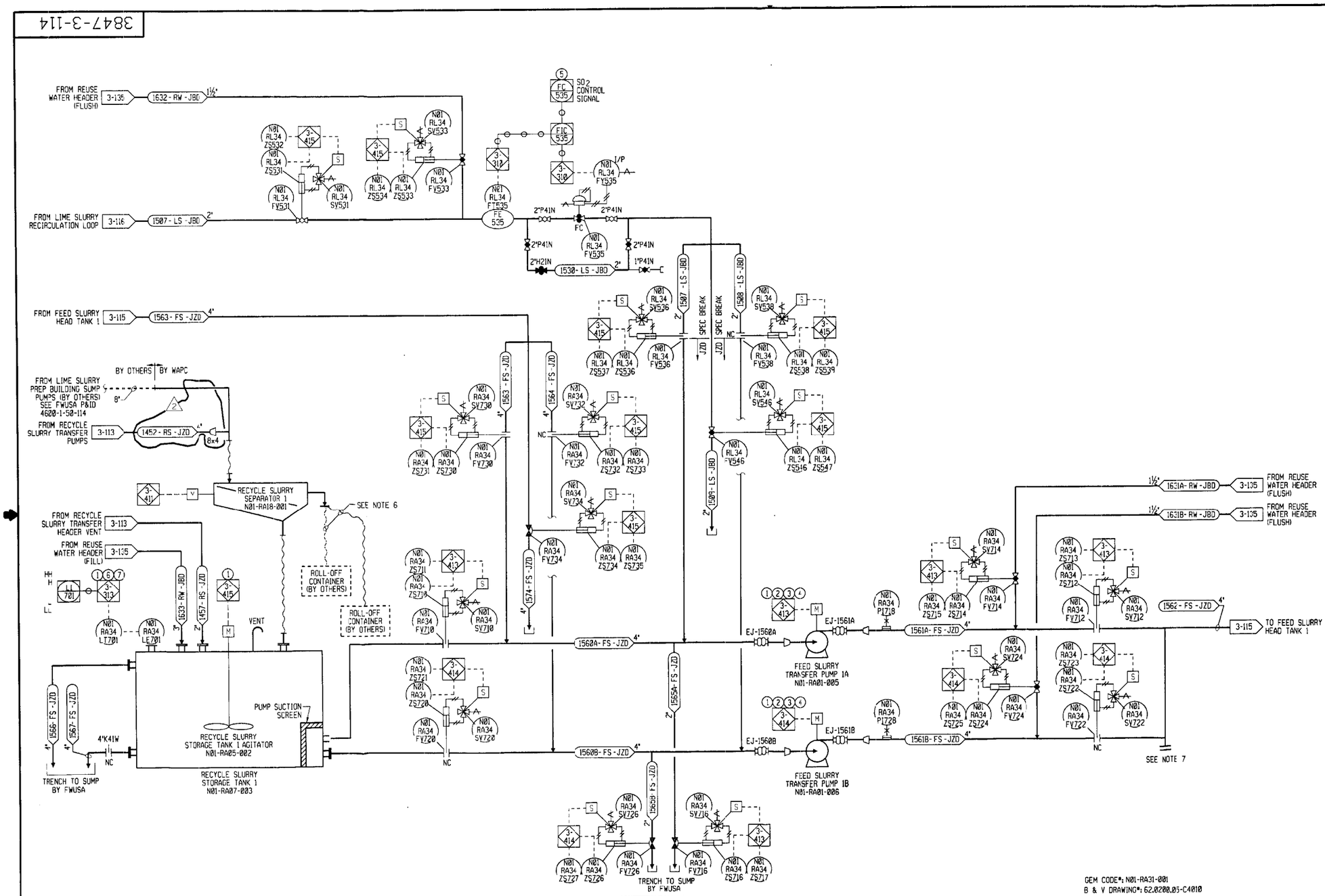


## INSTRUMENTATION NOTES:

1. LOW LOW TANK LEVEL TRIPS PUMPS & AGITATOR
2. AUTOMATIC PUMP START SEQUENCE WILL FIRST FULLY OPEN SUCTION VALVE. AFTER VALVE IS OPEN THE PUMP WILL START AND THE DISCHARGE VALVE WILL AUTOMATICALLY OPEN.
3. PUMP IS AUTOMATICALLY FLUSHED AND DRAINED WHEN PUMP IS STOPPED.
4. STANDBY PUMP WILL AUTOMATICALLY START WHEN OPERATING PUMP TRIPS.
5. $SO_2$ CONTROL SYSTEM CALCULATES THE PERCENTAGE OF TOTAL FLOW (FT-530 ON SH. 3-115) THAT WILL BE LIME SLURRY AND USES THAT CALCULATED VALUE AS SETPOINT TO THE LIME SLURRY FLOW CONTROLLER (FIC-535).
6. HIGH HIGH LEVEL IN TANK STOPS RECYCLE SOLIDS FEED TO MIX TANK (3-113).
7. HI HI HI LEVEL IN TANK WILL STOP SLURRY FEED TO TANK.

## NOTES:

1. FOR GENERAL NOTES & LEGEND SEE DWG'S. 3847-3-100 & 101
2. DCS CONTROL SYSTEM IS BY OTHERS.
3. ALL EQUIPMENT, INSTRUMENTS, ETC. SHOWN ON THIS DRAWING ARE FOR UNIT 1 AND ARE TYPICAL FOR UNIT 2. FOR UNIT 2 INSTRUMENT TAG AND EQUIPMENT NUMBERS CHANGE THE PREFIX N01 TO N02. EXAMPLE:
   N01-RA34-FV610 (UNIT 1)
   N02-RA34-FV610 (UNIT 2)
4. ALL VALVE OPEN POSITION SW'S & SOLENOIDS TO HAVE THE SAME LOOP NUMBER AS THE DEVICE. ALL CLOSED POSITION SW'S TO HAVE THE NEXT NUMBER IN SEQUENCE.
5. ALL 480V MOTOR DRIVEN EQUIPMENT SHALL HAVE THE FOLLOWING DCS I/O POINTS UNLESS OTHERWISE NOTED:
   START COMMAND [ MOTOR TAG No. ] CSR
   CNTL PWR/RUNNING [ MOTOR TAG No. ] 42A
   CNTL PWR/STOPPED [ MOTOR TAG No. ] 42B
6. SINGLE SEPARATOR DISCHARGE HOSE CAN BE MOVED FROM ONE CONTAINER TO THE OTHER WHEN THE FIRST CONTAINER IS FULL.
7. BLIND FLANGE CONNECTION FOR CLEAN-OUT/DRAIN.

This print and all information thereon is the property of Wheelabrator A.P.C. It is confidential and proprietary and must not be used, made public, or copied unless authorized in writing by Wheelabrator A.P.C. It is transmitted to you with the explicit understanding that it is subject to return upon request.

NOTE
FABRICATION, MANUFACTURING, OR DETAILING MAY PROCEED ONLY WHEN DRAWING IS ISSUED OR AUTHORIZED FOR SUCH PURPOSES.

| NO. | REVISION | DWN | CHK | DATE | NO. | REVISION | DWN | CHK | DATE |
|---|---|---|---|---|---|---|---|---|---|
| B | REVISED AS NOTED | JEO | | 1-18-00 | | | | | |
| C | REVISED AS NOTED | JEO | | 3-15-00 | | | | | |
| D | REVISED AS NOTED | JEO | | 7-20-00 | | | | | |
| 1 | REVISED AS NOTED | RWK | | 12-7-00 | | | | | |
| 2 | REVISED AS NOTED | JEO | | 6-11-01 | | | | | |

ISSUE RECORD

| REV. | DATE | TO | FOR |
|---|---|---|---|
| A | 11-8-99 | FOSTER WHEELER | APPROVAL |
| B | 1-18-00 | FOSTER WHEELER | APPROVAL |
| C | 3-15-00 | FOSTER WHEELER | APPROVAL |
| D | 7-20-00 | FOSTER WHEELER | CONSTRUCTION |
| D | 9-8-00 | | ERECTION BID |

| REV. | DATE | TO | FOR |
|---|---|---|---|
| 1 | 12-8-00 | FOSTER WHEELER | CONSTRUCTION |
| 1 | 1-15-01 | PIP, SUB/FIELD | CONSTRUCTION |
| 2 | 6-11-01 | FOSTER WHEELER | CONSTRUCTION |

| REV. | DATE | TO | FOR |
|---|---|---|---|
| | | | |

DRN. BY JEO DATE 8-11-99
CHKD. BY DATE
APPVD. BY PHP DATE 7-20-00
SCALE
CERTIFIED
BY: DATE:

FOSTER WHEELER
JACKSONVILLE ELECTRIC AUTHORITY
UNIT #1 & #2 REPOWERING PROJECT

PIPING & INSTRUMENTATION DIAGRAM
SDA FEED SLURRY
PREPARATION SYSTEM SH. 1

Wheelabrator Air Pollution Control
A Waste Management Company

DRAWING NUMBER 3847-3-114 REV. NO. 2

m:\contract\3847 jea\cad\38473114.dgn

PLOT DATE: 11 JUN 2001 15:07:27
LAST PLOTTED BY: JEO

CRA33213 28-OCT-2002 12:29:25

P062713.62.0200.05-C4010 St:RD 07/16/01 MM-02052

3847-3-115

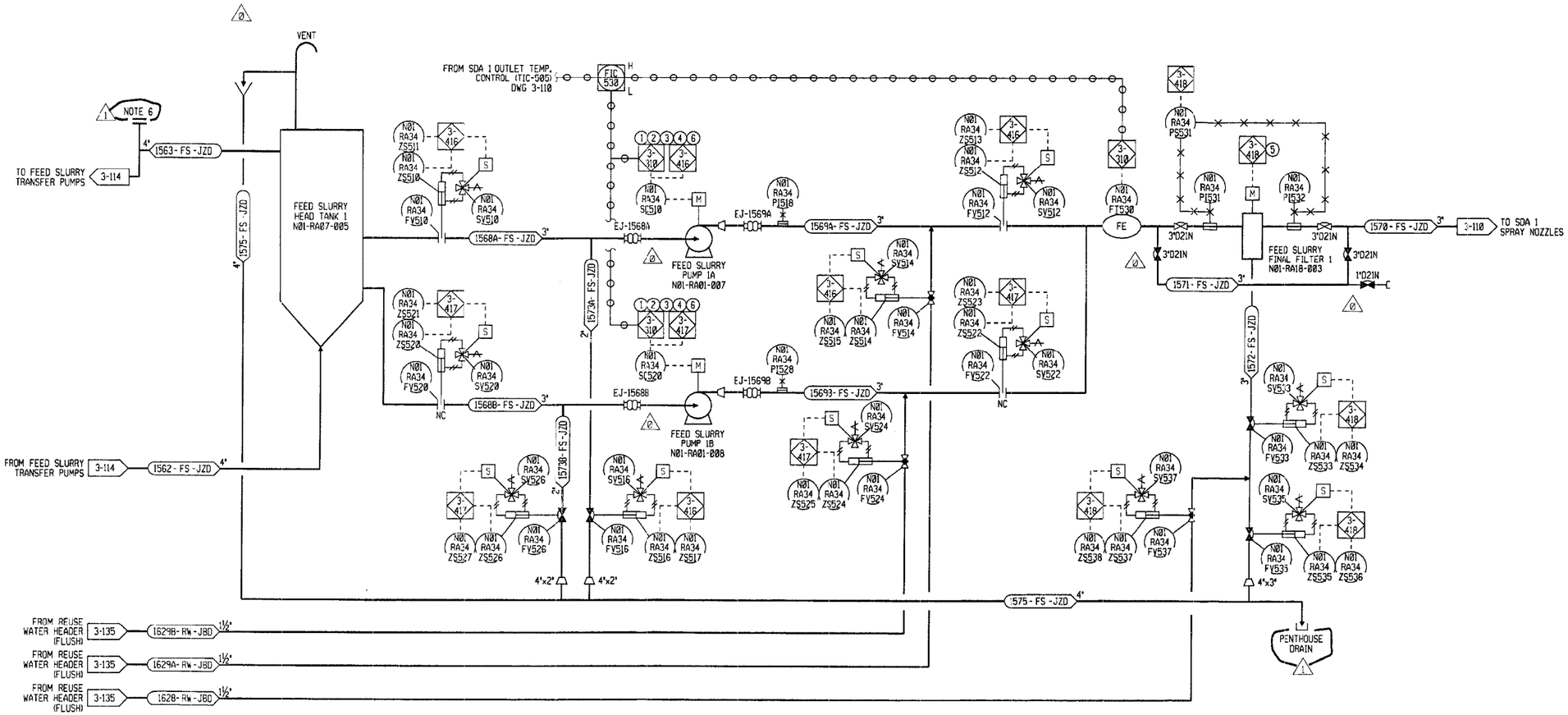


## INSTRUMENTATION NOTES:

1. PUMP FLOW IS CONTROLLED TO MAINTAIN SDA OUTLET TEMPERATURE.
2. AUTOMATIC PUMP START SEQUENCE WILL FIRST FULLY OPEN SUCTION VALVE. AFTER VALVE IS OPEN THE PUMP WILL START AND THE DISCHARGE VALVE WILL AUTOMATICALLY OPEN.
3. PUMP IS AUTOMATICALLY FLUSHED AND DRAINED WHEN PUMP IS STOPPED.
4. STANDBY PUMP WILL AUTOMATICALLY START WHEN OPERATING PUMP TRIPS.
5. FEED SLURRY FINAL FILTER IS AUTOMATICALLY FLUSHED ON HIGH DIFFERENTIAL PRESSURE OR TIME CYCLE.
6. FEED SLURRY TRANSFER PUMP 1A OR 1B MUST BE RUNNING BEFORE FEED SLURRY PUMP CAN BE STARTED.

## NOTES:

1. FOR GENERAL NOTES & LEGEND SEE DWG'S. 3847-3-100 & 101
2. DCS CONTROL SYSTEM IS BY OTHERS.
3. ALL EQUIPMENT, INSTRUMENTS, ETC. SHOWN ON THIS DRAWING ARE FOR UNIT 1 AND ARE TYPICAL FOR UNIT 2. FOR UNIT 2 INSTRUMENT TAG AND EQUIPMENT NUMBERS CHANGE THE PREFIX N01 TO N02. EXAMPLE:
   N01-RA34-FV610 (UNIT 1)
   N02-RA34-FV-610 (UNIT 2)
4. ALL OPEN POSITION SW'S & SOLENOIDS TO HAVE THE SAME LOOP NUMBER AS THE DEVICE. ALL CLOSED POSITION SW'S TO HAVE THE NEXT NUMBER IN SEQUENCE.
5. ALL 480V MOTOR DRIVEN EQUIPMENT SHALL HAVE THE FOLLOWING DCS I/O POINTS UNLESS OTHERWISE NOTED:
   START COMMAND [ MOTOR TAG No. ] CSR
   CNTL PWR/RUNNING [ MOTOR TAG No. ] 42A
   CNTL PWR/STOPPED [ MOTOR TAG No. ] 42B
6. BLIND FLANGE CONNECTION FOR MANUAL FLUSH.

GEM CODE*: N01-RA31-001, N02-RA31-001
B & V DRAWING*: 62.0200.05-C4011

This print and all information thereon is the property of Wheelabrator A.P.C. It is confidential and proprietary and must not be used, made public, or copied unless authorized in writing by Wheelabrator A.P.C. It is transmitted to you with the explicit understanding that it is subject to return upon request.

NOTE
FABRICATION, MANUFACTURING, OR DETAILING MAY PROCEED ONLY WHEN DRAWING IS ISSUED OR AUTHORIZED FOR SUCH PURPOSES.

| NO. | REVISION | DWN. | CHK. | DATE |
|---|---|---|---|---|
| B | REVISED AS NOTED | RES | | 1-18-00 |
| C | REVISED AS NOTED | JEO | | 3-15-00 |
| D | REVISED AS NOTED | JEO | | 7-20-00 |
| 1 | REVISED AS NOTED | CP | | 12-7-00 |

| NO. | REVISION | DWN. | CHK. | DATE |
|---|---|---|---|---|
| | | | | |

ISSUE RECORD

| REV. | DATE | TO | FOR |
|---|---|---|---|
| A | 11-8-99 | FOSTER WHEELER | APPROVAL |
| B | 1-18-00 | FOSTER WHEELER | APPROVAL |
| C | 3-15-00 | FOSTER WHEELER | APPROVAL |
| D | 7-20-00 | FOSTER WHEELER | CONSTRUCTION |
| D | 9-8-00 | | ERECTION BID |
| 1 | 12-8-00 | FOSTER WHEELER | CONSTRUCTION |

| REV. | DATE | TO | FOR |
|---|---|---|---|
| | | | |

| REV. | DATE | TO | FOR |
|---|---|---|---|
| | | | |

DRN. BY JEO DATE 10-11-99
CHKD. BY DATE
APPVD. BY PHP DATE 7-20-00
SCALE
CERTIFIED
BY: DATE:

FOSTER WHEELER
JACKSONVILLE ELECTRIC AUTHORITY
UNIT #1 & #2 REPOWERING PROJECT

PIPING & INSTRUMENTATION DIAGRAM
SDA FEED SLURRY
PREPARATION SYSTEM SH. 2

Wheelabrator Air Pollution Control
A Waste Management Company

DRAWING NUMBER 3847-3-115
REV. NO. 1

m:\contract\3847\cad\38473115.dgn

PLOT DATE: 08 DEC 2000 10:41:18
LAST PLOTTED BY: RWK

CRA33213 28-OCT-2002 12:28:30

P062713.62.0200.05-C4011 St:NE 01/19/01 MM-01412

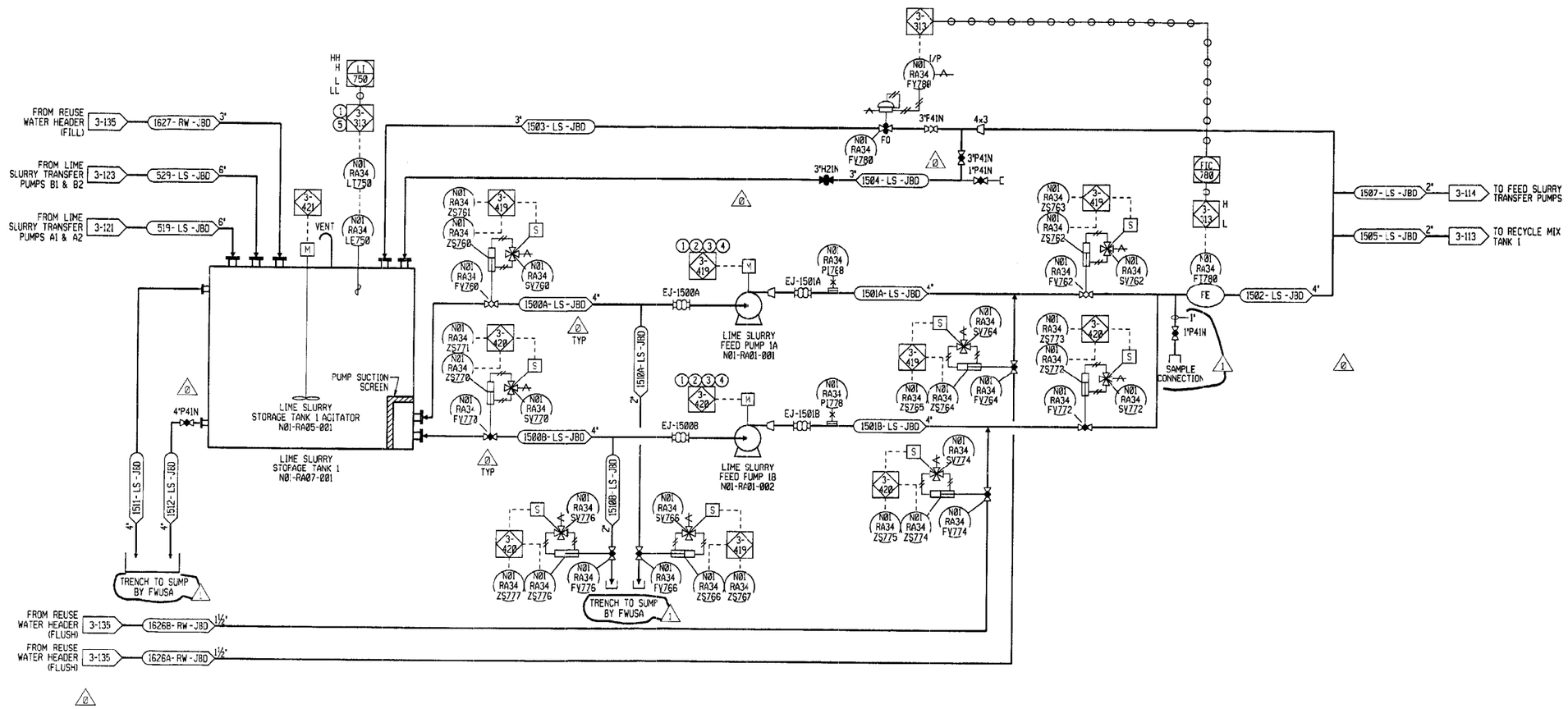


## INSTRUMENTATION NOTES:

1. LOW LOW TANK LEVEL TRIPS PUMPS & AGITATOR
2. AUTOMATIC PUMP START SEQUENCE WILL FIRST FULLY OPEN SUCTION VALVE. AFTER VALVE IS OPEN THE PUMP WILL START AND THE DISCHARGE VALVE WILL AUTOMATICALLY OPEN.
3. PUMP IS AUTOMATICALLY FLUSHED AND DRAINED WHEN PUMP IS STOPPED.
4. STANDBY PUMP WILL AUTOMATICALLY START WHEN OPERATING PUMP TRIPS.
5. HIGH LEVEL IN TANK WILL STOP LIME SLURRY FLOW TO TANK. LOW LEVEL WILL START SLURRY FLOW (SEE 3-121 & 123).

## NOTES:

1. FOR GENERAL NOTES & LEGEND SEE DWG'S. 3847-3-100 & 101
2. DCS CONTROL SYSTEM IS BY OTHERS.
3. ALL EQUIPMENT, INSTRUMENTS, ETC. SHOWN ON THIS DRAWING ARE FOR UNIT 1 AND ARE TYPICAL FOR UNIT 2. FOR UNIT 2 INSTRUMENT TAG AND EQUIPMENT NUMBERS CHANGE THE PREFIX N01 TO N02. EXAMPLE:
   N01-RA-34-FV610 (UNIT 1)
   N02-RA-34-FV-610 (UNIT 2)
4. ALL VALVE OPEN POSITION SW'S & SOLENOIDS TO HAVE THE SAME LOOP NUMBER AS THE DEVICE. ALL CLOSED POSITION SW'S TO HAVE THE NEXT NUMBER IN SEQUENCE.
5. ALL 480V MOTOR DRIVEN EQUIPMENT SHALL HAVE THE FOLLOWING DCS I/O POINTS UNLESS OTHERWISE NOTED:
   START COMMAND [ MOTOR TAG No. ] CSR
   CNTL PWR/RUNNING [ MOTOR TAG No. ] 42A
   CNTL PWR/STOPPED [ MOTOR TAG No. ] 42B

GEM CODE#: N01-RA31-001, N02-RA31-001
B & V DRAWING#: 62.0200.05-C4012

This print and all information thereon is the property of Wheelabrator A.P.C. It is confidential and proprietary and must not be used, made public, or copied unless authorized in writing by Wheelabrator A.P.C. It is transmitted to you with the explicit understanding that it is subject to return upon request.

NOTE
FABRICATION, MANUFACTURING, OR DETAILING MAY PROCEED ONLY WHEN DRAWING IS ISSUED OR AUTHORIZED FOR SUCH PURPOSES.

| NO. | REVISION | DWN. | CHK. | DATE |
|---|---|---|---|---|
| B | REVISED AS NOTED | RES | | 1-18-00 |
| C | REVISED AS NOTED | RED | | 3-15-00 |
| D | REVISED AS NOTED | RED | | 7-20-00 |
| 1 | REVISED AS NOTED | DG | | 12-7-00 |

| NO. | REVISION | DWN. | CHK. | DATE |
|---|---|---|---|---|
| | | | | |

ISSUE RECORD

| REV. | DATE | TO | FOR |
|---|---|---|---|
| A | 11-8-99 | FOSTER WHEELER | APPROVAL |
| B | 1-18-00 | FOSTER WHEELER | APPROVAL |
| C | 3-15-00 | FOSTER WHEELER | APPROVAL |
| D | 7-20-00 | FOSTER WHEELER | CONSTRUCTION |
| 0 | 9-8-00 | | ERECTION BID |
| 1 | 12-8-00 | FOSTER WHEELER | CONSTRUCTION |

| REV. | DATE | TO | FOR |
|---|---|---|---|
| | | | |

| REV. | DATE | TO | FOR |
|---|---|---|---|
| | | | |

DRN. BY JRU DATE 12-15-99
CHKD. BY DATE
APPVD. BY PHP DATE 7-20-00
SCALE NONE
CERTIFIED
BY: DATE:

FOSTER WHEELER
JACKSONVILLE ELECTRIC AUTHORITY
UNIT #1 & #2 REPOWERING PROJECT

PIPING & INSTRUMENTATION DIAGRAM
LIME SLURRY STORAGE
AND RECIRCULATION LOOP

Wheelabrator Air Pollution Control
A Waste Management Company

DRAWING NUMBER 3847-3-116
REV. NO. 1

m:\contract\3847\cad\38473116.cgn

PLOT DATE: 08 DEC 2000 10:41:25
LAST PLOTTED BY: RWK

CRA33213 28-OCT-2002 12:25:56

P062713.62.0200.05-C4012 St:NE 01/19/01 MM-01412

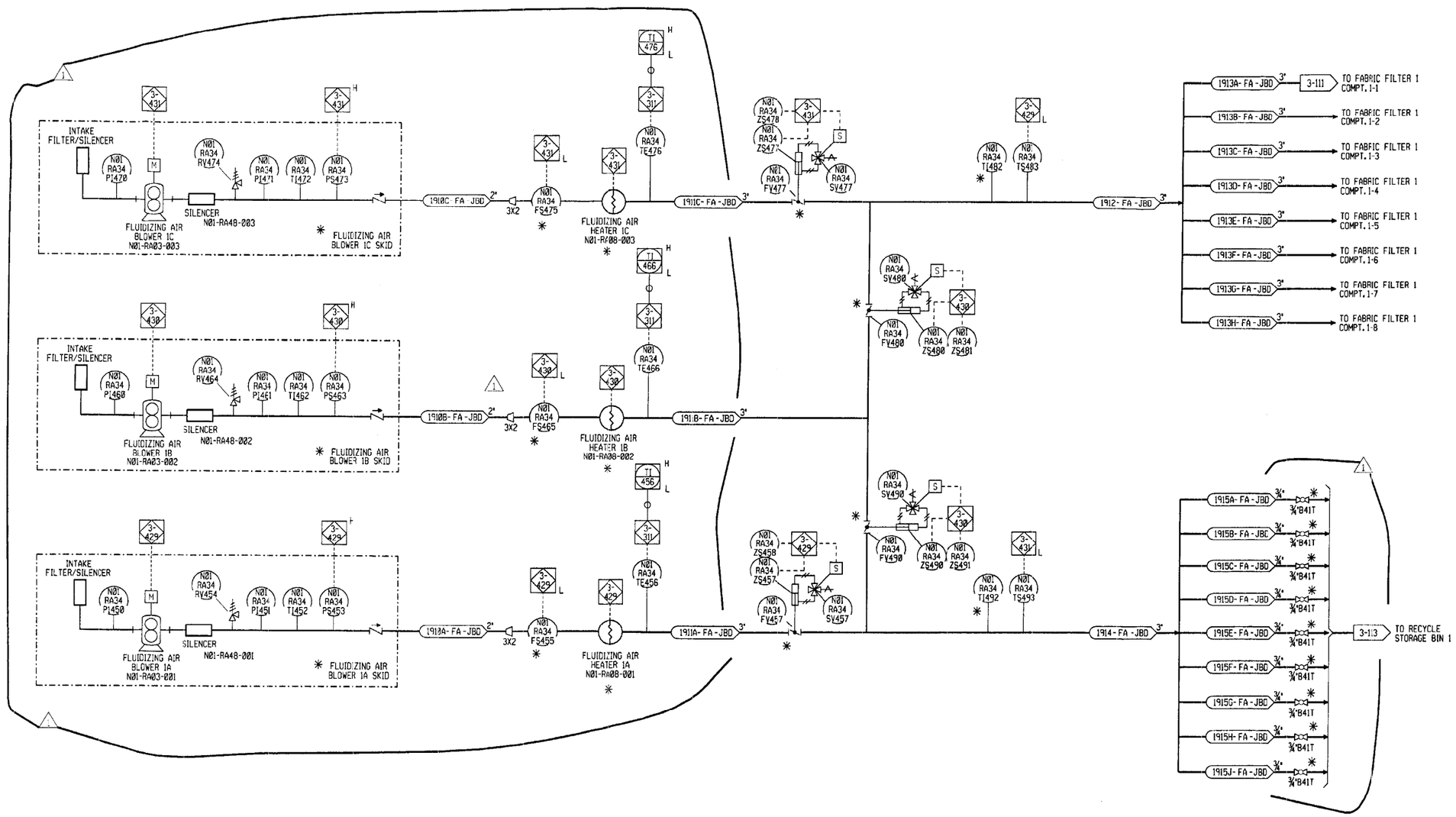


GEM CODE*: N01-RA31-001, N02-RA31-001
B & V DRAWING*: 62.0200.05-C4014

NOTES:

1. FOR GENERAL NOTES & LEGEND SEE DWG'S. 3847-3-100 & 101
2. DCS CONTROL SYSTEM IS BY OTHERS.
3. SHOWN FOR UNIT #1, DUPLICATE FOR UNIT #2 CHANGE PREFIX ON ALL TAG NUMBERS FROM N01 TO N02.
4. ALL 480V MOTOR DRIVEN EQUIPMENT SHALL HAVE THE FOLLOWING DCS I/O POINTS UNLESS OTHERWISE NOTED:
   START COMMAND [ MOTOR TAG No. ] CSR
   CNTL PWR/RUNNING [ MOTOR TAG No. ] 42A
   CNTL PWR/STOPPED [ MOTOR TAG No. ] 42B

* FURNISHED BY DELTA DUCON, FLUIDIZING AIR SYSTEM VENDOR.

This print and all information thereon is the property of Wheelabrator A.P.C. It is confidential and proprietary and must not be used, made public, or copied unless authorized in writing by Wheelabrator A.P.C. It is transmitted to you with the explicit understanding that it is subject to return upon request.

NOTE
FABRICATION, MANUFACTURING, OR DETAILING MAY PROCEED ONLY WHEN DRAWING IS ISSUED OR AUTHORIZED FOR SUCH PURPOSES.

| NO. | REVISION | DRN. / CHK. | DATE |
|---|---|---|---|
| B | REVISED AS NOTED | RES / JRG | 1-18-00 |
| C | REVISED AS NOTED | JRG / JRG | 3-15-00 |
| D | REDRAWN | JRG / JRG | 7-28-00 |
| 1 | REVISED AS NOTED | JRG / JRG | |

| NO. | REVISION | DRN. / CHK. | DATE |
|---|---|---|---|
| | | | |

ISSUE RECORD

| REV. | DATE | TO | FOR |
|---|---|---|---|
| A | 11-8-99 | FOSTER WHEELER | APPROVAL |
| B | 1-18-00 | FOSTER WHEELER | APPROVAL |
| C | 3-15-00 | FOSTER WHEELER | APPROVAL |
| D | 7-28-00 | FOSTER WHEELER | CONSTRUCTION |
| 0 | 9-6-00 | | ERECTION BID |
| 1 | 12-8-00 | FOSTER WHEELER | CONSTRUCTION |

| REV. | DATE | TO | FOR |
|---|---|---|---|
| | | | |

| REV. | DATE | TO | FOR |
|---|---|---|---|
| | | | |

DRN. BY JRG DATE 10-15-99
CHKD. BY DATE
APPVD. BY PHP DATE 7-20-00
SCALE NONE
CERTIFIED
BY: DATE:

FOSTER WHEELER
JACKSONVILLE ELECTRIC AUTHORITY
UNIT #1 & #2 REPOWERING PROJECT

PIPING & INSTRUMENTATION DIAGRAM
FLUIDIZING AIR BLOWERS

Wheelabrator Air Pollution Control
A Waste Management Company

DRAWING NUMBER 3847-3-118
REV. NO. 1

m:\contract\3847\cad\38473118.cgn

PLOT DATE: 08 DEC 2000 10:41:32
LAST PLOTTED BY: RWK

CRA33213 28-OCT-2002 12:22:42

P062713.62.0200.05-C4014 St:NE 01/19/01 MM-01412

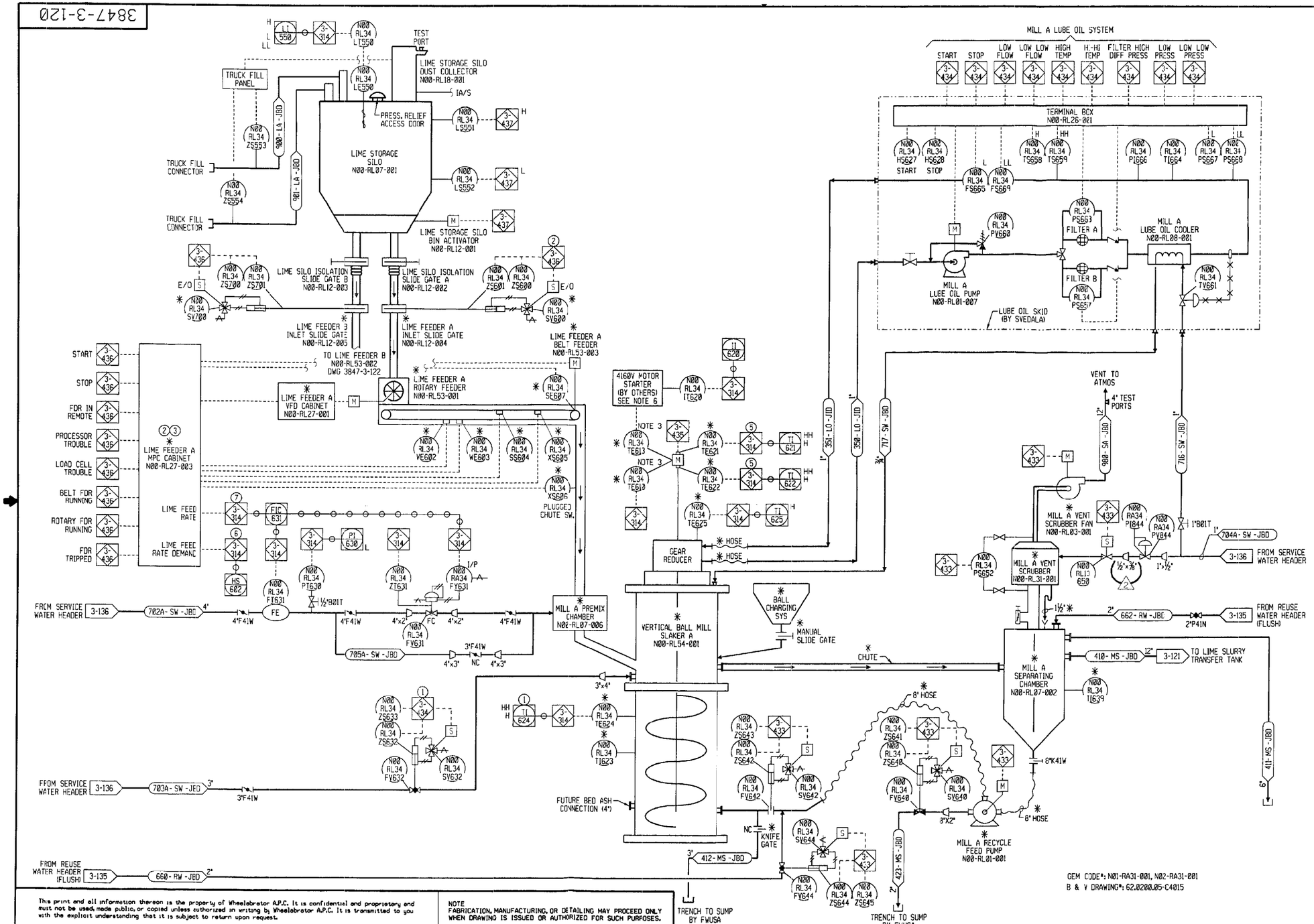


## INSTRUMENTATION NOTES:

1. HIGH TEMP IN MILL WILL OPEN WATER VALVE
2. LIME FEEDER INLET SLIDE GATE OPENS WHEN FEEDER IS STARTED.
3. MILL MIXER MUST BE OPERATING BEFORE LIME CAN BE FED TO MILL.
4. OPERATOR MANUALLY SETS LIME FEED RATE FROM DCS. LOCAL WEIGH BELT CONTROL THEN VARIES ROTARY LIME FEEDER TO MAINTAIN OPERATOR SELECTED FEED RATE.
5. HIGH HIGH MOTOR BEARING TEMP WILL STOP MILL.
6. OPERATOR SETS FEED RATE DEMAND FROM DCS. LOCAL CONTROL MAINTAINS OPERATOR SELECTED FEED RATE.
7. LIME FEED RATE IS USED TO DETERMINE WATER FLOW TO MILL BASED ON PRESET RATIO.

## NOTES:

1. FOR GENERAL NOTES & LEGEND SEE DWG'S. 3847-3-100 & 101
2. DCS CONTROL SYSTEM IS BY OTHERS.
3. 6 MTR STATOR RTDS ARE REQUIRED 2 PER PHASE. MTR STATOR RTDS, TAG NUMBER N00-RL34-TE610, 611 & 612 (1 PER PHASE) ARE TO BE WIRED TO CUSTOMER'S DCS.
   MTR STATOR RTDS, TAG NUMBER N00-RL34-TE613, 614 & 615 (1 PER PHASE) ARE TO BE WIRED TO THE MOTOR SOLID STATE PROTECTION UNIT AT CUSTOMER'S MV MOTOR STARTER.
4. ALL VALVE OPEN POSITION SW'S & SOLENOIDS TO HAVE THE SAME LOOP NUMBER AS THE DEVICE. ALL CLOSED POSITION SW'S TO HAVE THE NEXT NUMBER IN SEQUENCE.
5. ALL 480V MOTOR DRIVEN EQUIPMENT SHALL HAVE THE FOLLOWING DCS I/O POINTS UNLESS OTHERWISE NOTED:
   START COMMAND [ MOTOR TAG No. ] CSR
   CNTL PWR/RUNNING [ MOTOR TAG No. ] 42A
   CNTL PWR/STOPPED [ MOTOR TAG No. ] 42B
6. ALL 4160V MOTOR DRIVEN EQUIPMENT SHALL HAVE THE FOLLOWING DCS I/O POINTS UNLESS OTHERWISE NOTED:
   START COMMAND [ MOTOR TAG No. ] CSR
   STOP COMMAND [ MOTOR TAG No. ] CSP
   MOTOR RUNNING [ MOTOR TAG No. ] 42A
   MOTOR STOPPED [ MOTOR TAG No. ] 42B
   BKR/PROT RLY TROUBLE [ MOTOR TAG No. ] TBL
   BKR IN CONNECTED POS. [ MOTOR TAG No. ] 52H
7. ✱ INDICATES EQUIPMENT SUPPLIED BY SVEDALA

B&V DWG NO: 62.0200.05-C4015

This print and all information thereon is the property of Wheelabrator A.P.C. It is confidential and proprietary and must not be used, made public, or copied unless authorized in writing by Wheelabrator A.P.C. It is transmitted to you with the explicit understanding that it is subject to return upon request.

NOTE
FABRICATION, MANUFACTURING, OR DETAILING MAY PROCEED ONLY WHEN DRAWING IS ISSUED OR AUTHORIZED FOR SUCH PURPOSES.

| NO. | REVISION | DWN. | CHK. | DATE |
|---|---|---|---|---|
| B | REVISED AS NOTED | FEO | | 1-18-00 |
| C | REVISED AS NOTED | FEO | | 3-15-00 |
| D | REVISED AS NOTED | FEO | | 7-20-00 |
| 1 | REVISED AS NOTED | UD | | 12-7-00 |
| 2 | REVISED AS NOTED | FEO | | 2-5-01 |

| NO. | REVISION | DWN. | CHK. | DATE |
|---|---|---|---|---|
| | | | | |

ISSUE RECORD

| REV. | DATE | TO | FOR |
|---|---|---|---|
| A | 11-8-99 | FOSTER WHEELER | APPROVAL |
| B | 1-18-00 | FOSTER WHEELER | APPROVAL |
| C | 3-15-00 | FOSTER WHEELER | APPROVAL |
| D | 7-20-00 | FOSTER WHEELER | CONSTRUCTION |
| E | 9-8-00 | | ERECTION BID |

| REV. | DATE | TO | FOR |
|---|---|---|---|
| 1 | 12-6-00 | FOSTER WHEELER | CONSTRUCTION |
| 1 | 1-15-0 | PIP, SUB/FIELD | CONSTRUCTION |
| 2 | 2-5-01 | FOSTER WHEELER | CONSTRUCTION |

| REV. | DATE | TO | FOR |
|---|---|---|---|
| | | | |

DRN. BY JRU DATE 10-15-99
CHKD. BY DATE
APPV'D. BY PHP DATE 7-20-00
SCALE NONE
CERTIFIED
BY: DATE:

FOSTER WHEELER
JACKSONVILLE ELECTRIC AUTHORITY
UNIT #1 & #2 REPOWERING PROJECT

PIPING & INSTRUMENTATION DIAGRAM
BALL MILL
SLAKING SYSTEM A

Wheelabrator Air Pollution Control
A Waste Management Company

DRAWING NUMBER 3847-3-120 REV. NO. 2

m:\contract\3847\cad\3847\120.cgn

PLOT DATE: 05 FEB 2001 13:00:05
LAST PLOTTED BY: FEO

CRA33213 28-OCT-2002 12:21:20

P062713.62.0200.05-C4015 St:RD 03/03/01 MM-01611

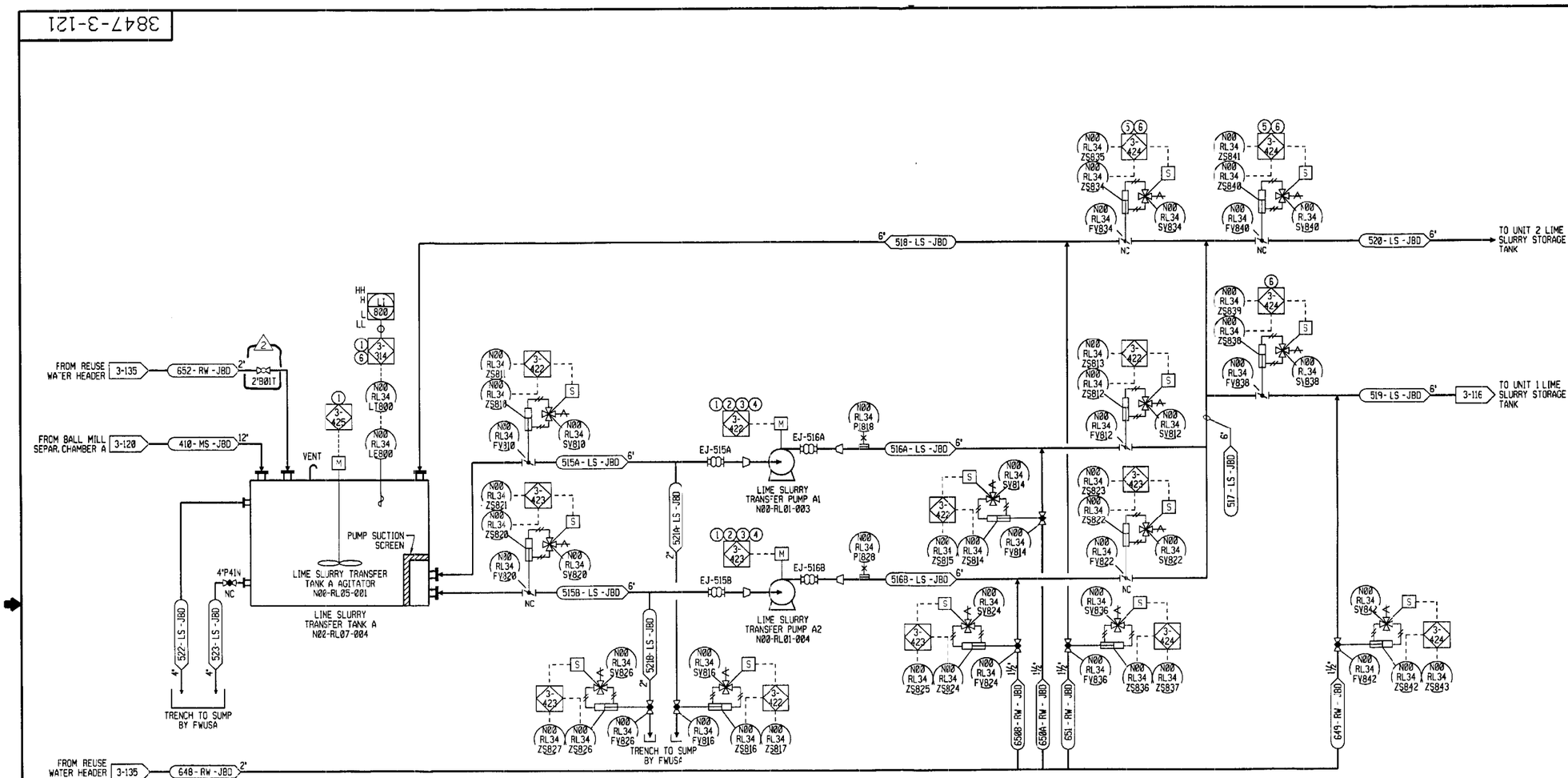


## INSTRUMENTATION NOTES:

1. LOW LOW TANK LEVEL TRIPS PUMPS & AGITATOR
2. AUTOMATIC PUMP START SEQUENCE WILL FIRST FULLY OPEN SUCTION VALVE. AFTER VALVE IS OPEN THE PUMP WILL START AND THE DISCHARGE VALVE WILL AUTOMATICALLY OPEN.
3. PUMP IS AUTOMATICALLY FLUSHED AND DRAINED WHEN PUMP IS STOPPED.
4. STANDBY PUMP WILL AUTOMATICALLY START WHEN OPERATING PUMP TRIPS.
5. LINE IS FLUSHED WHEN ISOLATION VALVE IS CLOSED.
6. LOW LEVEL IN TANK WILL RECIRCULATE SLURRY BACK TO TANK. HIGH LEVEL WILL PUMP SLURRY TO STORAGE TANKS.

## NOTES:

1. FOR GENERAL NOTES & LEGEND SEE DWG'S. 3847-3-100 & 101
2. DCS CONTROL SYSTEM IS BY OTHERS.
3. ALL VALVE OPEN POSITION SW'S & SOLENOIDS TO HAVE THE SAME LOOP NUMBER AS THE DEVICE. ALL CLOSED POSITION SW'S TO HAVE THE NEXT NUMBER IN SEQUENCE.
4. ALL 480V MOTOR DRIVEN EQUIPMENT SHALL HAVE THE FOLLOWING DCS I/O POINTS UNLESS OTHERWISE NOTED:
   START COMMAND [ MOTOR TAG No. ] CSR
   CNTL PWR/RUNNING [ MOTOR TAG No. ] 42A
   CNTL PWR/STOPPED [ MOTOR TAG No. ] 42B

GEM CODE*: N01-RA31-001, N02-RA31-001
B & V DRAWING*: 62.0200.05-C4016

This print and all information thereon is the property of Wheelabrator A.P.C. It is confidential and proprietary and must not be used, made public, or copied unless authorized in writing by Wheelabrator A.P.C. It is transmitted to you with the explicit understanding that it is subject to return upon request.

NOTE
FABRICATION, MANUFACTURING, OR DETAILING MAY PROCEED ONLY WHEN DRAWING IS ISSUED OR AUTHORIZED FOR SUCH PURPOSES.

| NO. | REVISION | DWN. | CHK. | DATE | NO. | REVISION | DWN. | CHK. | DATE |
|---|---|---|---|---|---|---|---|---|---|
| B | REVISED AS NOTED | JRO | | 1-18-00 | | | | | |
| C | REVISED AS NOTED | JRO | | 3-15-00 | | | | | |
| 0 | REVISED AS NOTED | JRO | | 7-20-00 | | | | | |
| 1 | REVISED AS NOTED | JRO | | 12-7-00 | | | | | |
| 2 | REVISED AS NOTED | JRO | | 6-11-01 | | | | | |

ISSUE RECORD

| REV. | DATE | TO | FOR |
|---|---|---|---|
| A | 11-8-99 | FOSTER WHEELER | APPROVAL |
| B | 1-18-00 | FOSTER WHEELER | APPROVAL |
| C | 3-15-00 | FOSTER WHEELER | APPROVAL |
| 0 | 7-20-00 | FOSTER WHEELER | CONSTRUCTION |
| 0 | 9-8-00 | | ERECTION BID |

| REV. | DATE | TO | FOR |
|---|---|---|---|
| 1 | 12-8-00 | FOSTER WHEELER | CONSTRUCTION |
| 1 | 1-15-01 | PIP. SUB/FIELD | CONSTRUCTION |
| 2 | 6-11-01 | FOSTER WHEELER | CONSTRUCTION |

| REV. | DATE | TO | FOR |
|---|---|---|---|
| | | | |

| | | | |
|---|---|---|---|
| DRN. BY | JRU | DATE | 12-15-99 |
| CHKD. BY | | DATE | |
| APPVD. BY | PHP | DATE | 7-20-00 |
| SCALE | NONE | | |
| CERTIFIED BY: | | DATE: | |

FOSTER WHEELER
JACKSONVILLE ELECTRIC AUTHORITY
UNIT #1 & #2 REPOWERING PROJECT

PIPING & INSTRUMENTATION DIAGRAM
LIME SLURRY
TRANSFER SYSTEM A

Wheelabrator Air Pollution Control
A Waste Management Company

DRAWING NUMBER 3847-3-121
REV. NO. 2

m:\contract\3847_ea\cad\38473121.dgn

PLOT DATE: 11 JUN 2001 15:07:36
LAST PLOTTED BY: JEO

CRA33213 28-OCT-2002 12:19:15

P062713.62.0200.05-C4016 St:RD 07/16/01 MM-02052

3847-3-122

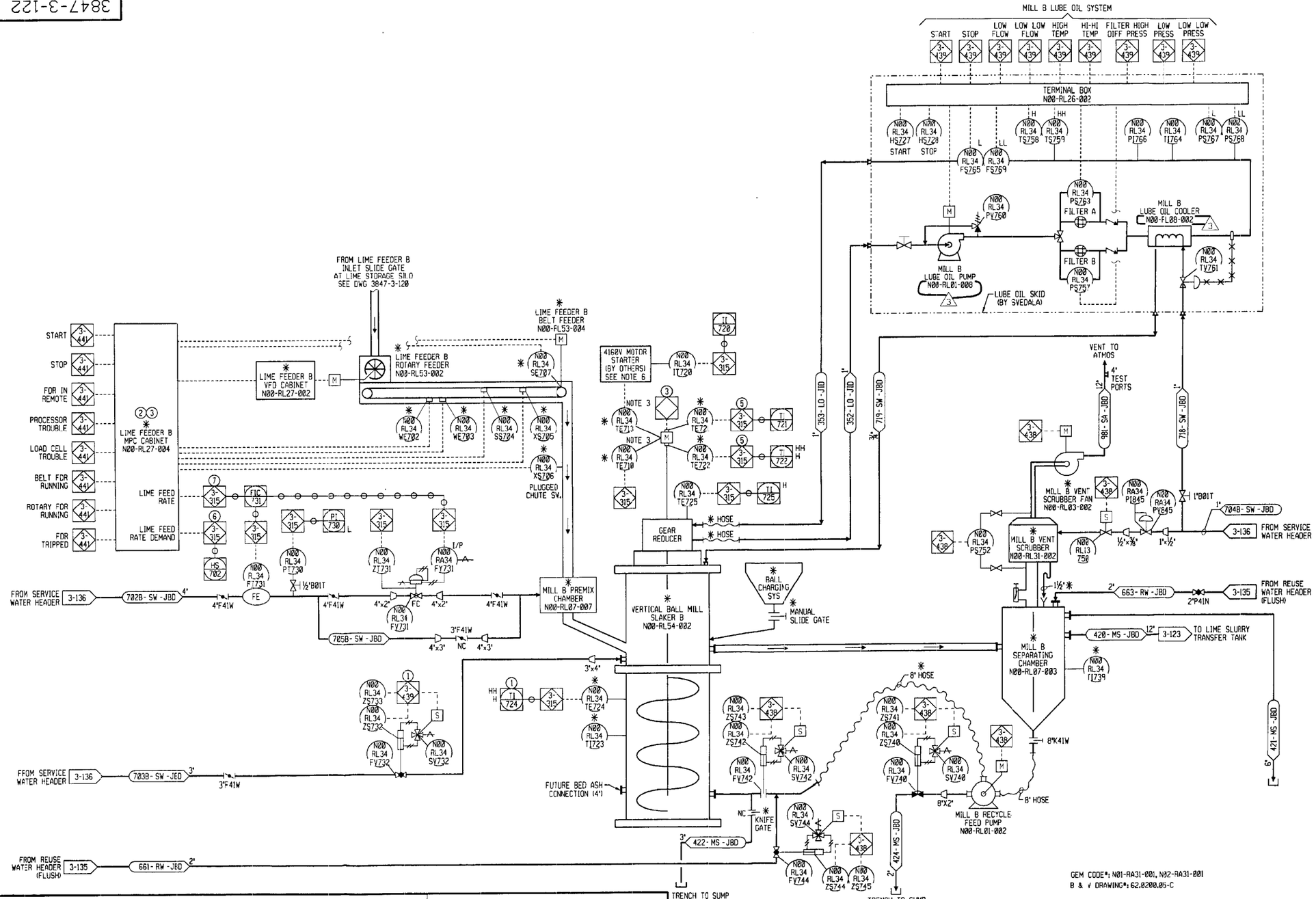


## INSTRUMENTATION NOTES:

1. HIGH TEMP IN MILL WILL OPEN WATER VALVE
2. LIME FEEDER INLET SLIDE GATE OPENS WHEN FEEDER IS STARTED.
3. MILL MIXER MUST BE OPERATING BEFORE LIME CAN BE FED TO MILL.
4. OPERATOR MANUALLY SETS LIME FEED RATE FROM DCS. LOCAL WEIGH BELT CONTROL THEN VARIES ROTARY LIME FEEDER TO MAINTAIN OPERATOR SELECTED FEED RATE.
5. HIGH HIGH MOTOR BEARING TEMP WILL STOP MILL.
6. OPERATOR SETS FEED RATE DEMAND FROM DCS. LOCAL CONTROL MAINTAINS OPERATOR SELECTED FEED RATE.
7. LIME FEED RATE IS USED TO DETERMINE WATER FLOW TO MILL BASED ON PRESET RATIO.

## NOTES:

1. FOR GENERAL NOTES & LEGEND SEE DWG'S. 3847-3-100 & 101
2. DCS CONTROL SYSTEM IS BY OTHERS.
3. 6 MTR STATOR RTDS ARE REQUIRED 2 PER PHASE. MTR STATOR RTDS, TAG NUMBER N00-RL34-TE710, 711 & 712 (1 PER PHASE) ARE TO BE WIRED TO CUSTOMER'S DCS.
   MTR STATOR RTDS, TAG NUMBER N00-RL34-TE713, 714 & 715 (1 PER PHASE) ARE TO BE WIRED TO THE MOTOR SOLID STATE PROTECTION UNIT AT CUSTOMER'S MV MOTOR STARTER.
4. ALL VALVE OPEN POSITION SW'S & SOLENOIDS TO HAVE THE SAME LOOP NUMBER AS THE DEVICE. ALL CLOSED POSITION SW'S TO HAVE THE NEXT NUMBER IN SEQUENCE.
5. ALL 480V MOTOR DRIVEN EQUIPMENT SHALL HAVE THE FOLLOWING DCS I/O POINTS UNLESS OTHERWISE NOTED:
   START COMMAND [ MOTOR TAG No. ] CSR
   CNTL PWR/RUNNING [ MOTOR TAG No. ] 42A
   CNTL PWR/STOPPED [ MOTOR TAG No. ] 42B
6. ALL 4160V MOTOR DRIVEN EQUIPMENT SHALL HAVE THE FOLLOWING DCS I/O POINTS UNLESS OTHERWISE NOTED:
   START COMMAND [ MOTOR TAG No. ] CSR
   STOP COMMAND [ MOTOR TAG No. ] CSP
   MOTOR RUNNING [ MOTOR TAG No. ] 42A
   MOTOR STOPPED [ MOTOR TAG No. ] 42B
   BKR/PROT RLY TROUBLE [ MOTOR TAG No. ] TBL
   BKR IN CONNECTED POS. [ MOTOR TAG No. ] 52H
7. * INDICATES EQUIPMENT SUPPLIED BY SVEDALA

This print and all information thereon is the property of Wheelabrator A.P.C. It is confidential and proprietary and must not be used, made public, or copied unless authorized in writing by Wheelabrator A.P.C. It is transmitted to you with the explicit understanding that it is subject to return upon request.

NOTE
FABRICATION, MANUFACTURING, OR DETAILING MAY PROCEED ONLY WHEN DRAWING IS ISSUED OR AUTHORIZED FOR SUCH PURPOSES.

| NO. | REVISION | DWN. | CHK. | DATE |
|---|---|---|---|---|
| B | REVISED AS NOTED | JEO | | 3-15-00 |
| 0 | REVISED AS NOTED | JEO | | 7-20-00 |
| 1 | REVISED AS NOTED | DG | | 12-7-00 |
| 2 | REVISED AS NOTED | JEO | | 2-5-01 |
| 3 | REVISED AS NOTED | JEO | | 6-11-01 |

| NO. | REVISION | DWN. | CHK. | DATE |
|---|---|---|---|---|
| | | | | |

ISSUE RECORD

| REV. | DATE | TO | FOR |
|---|---|---|---|
| A | 1-18-00 | FOSTER WHEELER | APPROVAL |
| B | 3-15-00 | FOSTER WHEELER | APPROVAL |
| 0 | 7-20-00 | FOSTER WHEELER | CONSTRUCTION |
| 0 | 9-8-00 | | ERECTION BID |
| 1 | 12-8-00 | FOSTER WHEELER | CONSTRUCTION |

| REV. | DATE | TO | FOR |
|---|---|---|---|
| 1 | 1-15-01 | PIP.SUB/FIELD | CONSTRUCTION |
| 2 | 2-5-01 | FOSTER WHEELER | CONSTRUCTION |
| 3 | 6-11-01 | FOSTER WHEELER | CONSTRUCTION |

| REV. | DATE | TO | FOR |
|---|---|---|---|
| | | | |

DRN. BY JEO DATE 1-7-00
CHKD. BY DATE
APPVD. BY PHP DATE 7-20-00
SCALE NONE
CERTIFIED
BY: DATE:

FOSTER WHEELER
JACKSONVILLE ELECTRIC AUTHORITY
UNIT #1 & #2 REPOWERING PROJECT

PIPING & INSTRUMENTATION DIAGRAM
BALL MILL
SLAKING SYSTEM B

Wheelabrator Air Pollution Control
A Waste Management Company

DRAWING NUMBER 3847-3-122 REV. NO. 3

m:\contract\3847 jea\cad\38473122.dgn

PLOT DATE: 11 JUN 2001 15:07:44
LAST PLOTTED BY: JEO

CRA33213 28-OCT-2002 12:48:37

P062713.62.0200.05-C4024 St:RD 07/16/01 MM-02052

3847-3-123

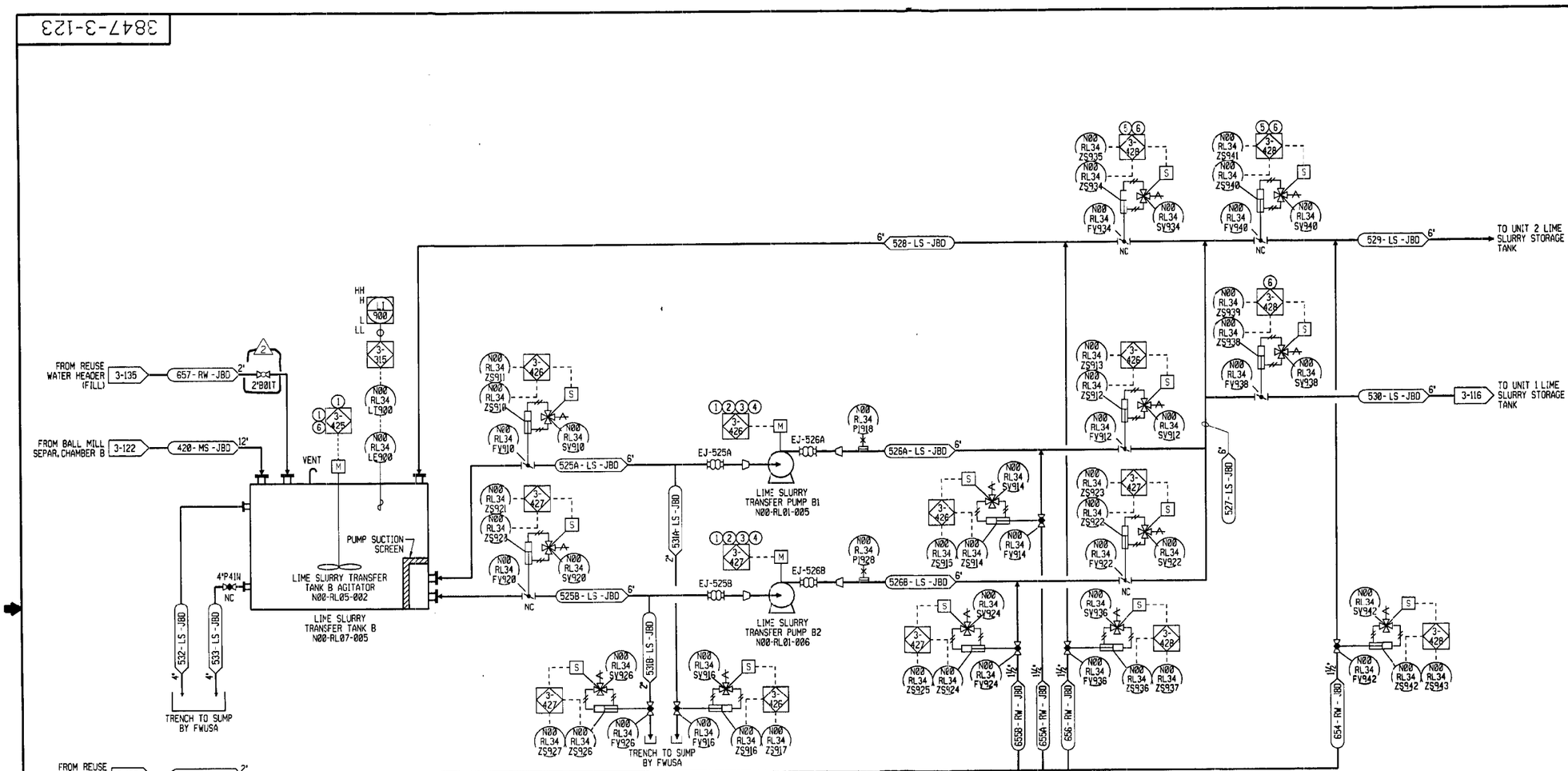


## INSTRUMENTATION NOTES:

1. LOW LOW TANK LEVEL TRIPS PUMPS & AGITATOR
2. AUTOMATIC PUMP START SEQUENCE WILL FIRST FULLY OPEN SUCTION VALVE. AFTER VALVE IS OPEN THE PUMP WILL START AND THE DISCHARGE VALVE WILL AUTOMATICALLY OPEN.
3. PUMP IS AUTOMATICALLY FLUSHED AND DRAINED WHEN PUMP IS STOPPED.
4. STANDBY PUMP WILL AUTOMATICALLY START WHEN OPERATING PUMP TRIPS.
5. LINE IS FLUSHED WHEN ISOLATION VALVE IS CLOSED.
6. LOW LEVEL IN TANK WILL RECIRCULATE SLURRY BACK TO TANK. HIGH LEVEL WILL PUMP SLURRY TO STORAGE TANKS.

## NOTES:

1. FOR GENERAL NOTES & LEGEND SEE DWG'S. 3847-3-100 & 101
2. DCS CONTROL SYSTEM IS BY OTHERS.
3. ALL VALVE OPEN POSITION SW'S & SOLENOIDS TO HAVE THE SAME LOOP NUMBER AS THE DEVICE. ALL CLOSED POSITION SW'S TO HAVE THE NEXT NUMBER IN SEQUENCE.
4. ALL 480V MOTOR DRIVEN EQUIPMENT SHALL HAVE THE FOLLOWING DCS I/O POINTS UNLESS OTHERWISE NOTED:
   START COMMAND [ MOTOR TAG No. ] CSR
   CNTL PWR/RUNNING [ MOTOR TAG No. ] 42A
   CNTL PWR/STOPPED [ MOTOR TAG No. ] 42B

GEM CODE*: N01-RA31-001, N02-RA31-001
B & V DRAWING*: 62.0200.05-C4025

This print and all information thereon is the property of Wheelabrator A.P.C. It is confidential and proprietary and must not be used, made public, or copied unless authorized in writing by Wheelabrator A.P.C. It is transmitted to you with the explicit understanding that it is subject to return upon request.

NOTE
FABRICATION, MANUFACTURING, OR DETAILING MAY PROCEED ONLY WHEN DRAWING IS ISSUED OR AUTHORIZED FOR SUCH PURPOSES.

| NO. | REVISION | DWN. | CHK. | DATE |
|---|---|---|---|---|
| D | REVISED AS NOTED | JEO | | 3-15-00 |
| B | REVISED AS NOTED | JEO | | 7-20-00 |
| 1 | REVISED AS NOTED | DO | | 12-7-00 |
| 2 | REVISED AS NOTED | JEO | | 6-11-01 |

| NO. | REVISION | DWN. | CHK. | DATE |
|---|---|---|---|---|
| | | | | |

ISSUE RECORD

| REV. | DATE | TO | FOR |
|---|---|---|---|
| A | 1-16-00 | FOSTER WHEELER | APPROVAL |
| B | 3-15-00 | FOSTER WHEELER | APPROVAL |
| 0 | 7-20-00 | FOSTER WHEELER | CONSTRUCTION |
| 0 | 9-8-00 | | ERECT ON BID |
| 1 | 12-8-00 | FOSTER WHEELER | CONSTRUCTION |

| REV. | DATE | TO | FOR |
|---|---|---|---|
| 1 | 1-15-01 | PIP. SUB/FIELD | CONSTRUCTION |
| 2 | 6-11-01 | FOSTER WHEELER | CONSTRUCTION |

| REV. | DATE | TO | FOR |
|---|---|---|---|
| | | | |

DRN. BY JEO DATE -10-00
CHKD. BY DATE
APPVD. BY PHP DATE 7-20-00
SCALE NONE
CERTIFIED
BY: DATE:

FOSTER WHEELER
JACKSONVILLE ELECTRIC AUTHORITY
UNIT #1 & #2 REPOWERING PROJECT

PIPING & INSTRUMENTATION DIAGRAM
LIME SLURRY
TRANSFER SYSTEM B

Wheelabrator Air Pollution Control
A Waste Management Company

DRAWING NUMBER 3847-3-123
REV. NO. 2

PLOT DATE: 11 JUN 2001 15:07:55
LAST PLOTTED BY: JEO

m:\contract\3847 jea\cad\38473123.dgn

CRA33213 28-OCT-2002 12:47:55

P062713.62.0200.05-C4025 St:RD 07/16/01 MM-02052

3847-3-130

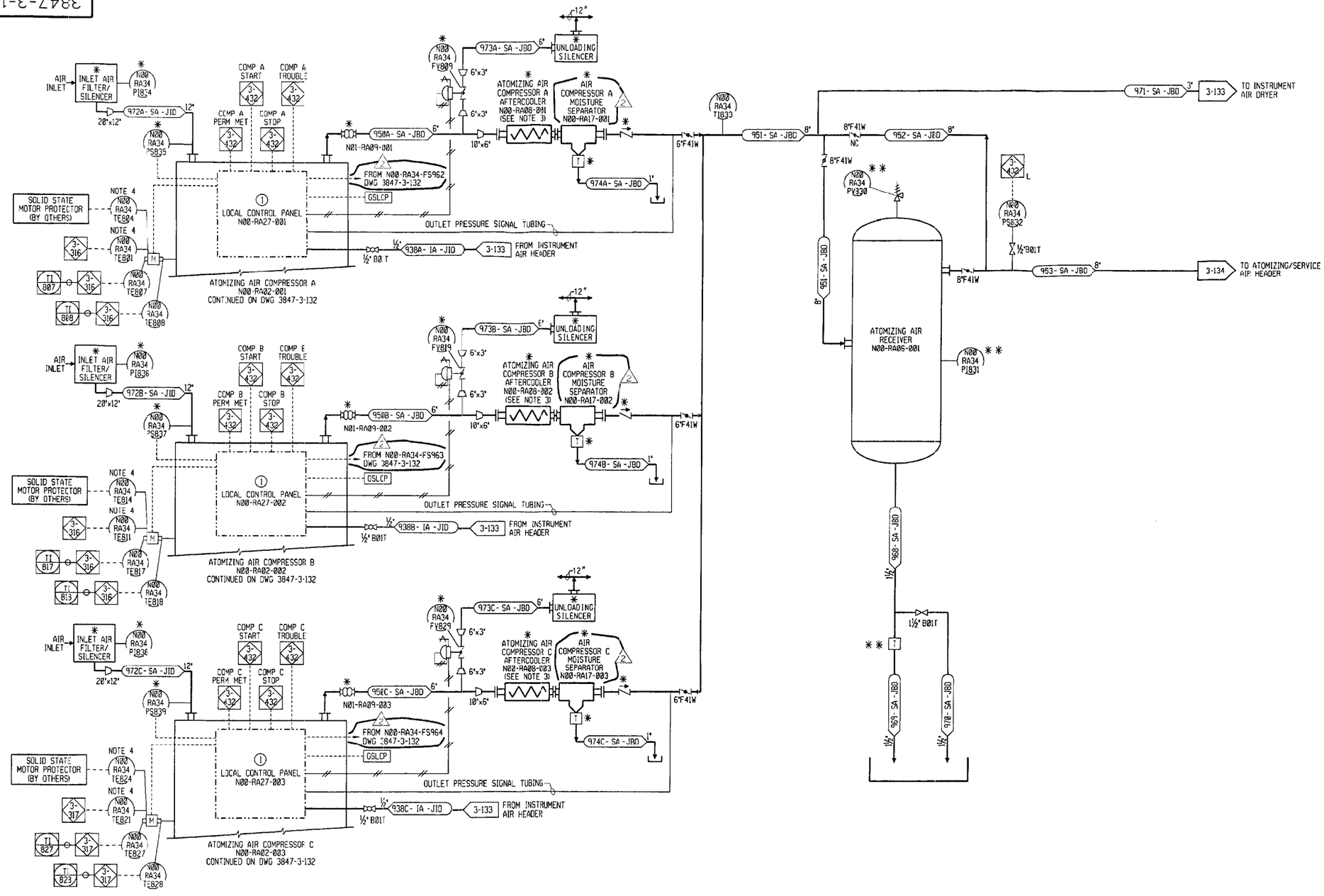


## INSTRUMENTATION NOTES:

(1) STANDBY COMPRESSOR WILL AUTOMATICALLY START IF OPERATING COMPRESSOR TRIPS.

## NOTES:

1. FOR GENERAL NOTES & LEGEND SEE DWG'S. 3847-3-100 & 101
2. DCS CONTROL SYSTEM IS BY OTHERS.
3. FOR GLYCOL/WATER PIPING ON LUBE OIL, INNER AND AFTER COOLERS SEE DWG 3847-3-132.
4. 6 MTR STATOR RTDS ARE REQUIRED 2 PER PHASE.
   COMP A MTR STATOR RTDS, TAG NUMBER N00-RA34-TE801, 802 & 803 (1 PER PHASE) ARE TO BE WIRED TO CUSTOMER'S DCS.
   COMP A MTR STATOR RTDS, TAG NUMBER N00-RL34-TE813, 814 & 815 (1 PER PHASE) ARE TO BE WIRED TO THE MTR SOLID STATE PROTECTION UNIT AT CUSTOMER'S MV MOTOR STARTER.
   COMP B MTR STATOR RTDS, TAG NUMBER N00-RA34-TE811, 812 & 813 (1 PER PHASE) ARE TO BE WIRED TO CUSTOMER'S DCS.
   COMP B MTR STATOR RTDS, TAG NUMBER N00-RL34-TE814, 815 & 816 (1 PER PHASE) ARE TO BE WIRED TO THE MTR SOLID STATE PROTECTION UNIT AT CUSTOMER'S MV MOTOR STARTER.
   COMP C MTR STATOR RTDS, TAG NUMBER N00-RA34-TE821, 822 & 823 (1 PER PHASE) ARE TO BE WIRED TO CUSTOMER'S DCS.
   COMP C MTR STATOR RTDS, TAG NUMBER N00-RL34-TE824, 825 & 826 (1 PER PHASE) ARE TO BE WIRED TO THE MTR SOLID STATE PROTECTION UNIT AT CUSTOMER'S MV MOTOR STARTER.
5. ALL COMPRESSORS SHALL HAVE THE FOLLOWING DCS I/O POINTS UNLESS OTHERWISE NOTED:
   START COMMAND - [COMPR TAG No.] CSR
   STOP COMMAND - [COMPR TAG No.] CSP
   COMPR RUNNING - [COMPR TAG No.] 42A
   COMPR STOPPED - [COMPR TAG No.] 42B
   BKR/PROT RLY TROUBLE - [COMPR TAG No.] TBL
   BKR IN CONNECTED POS - [COMPR TAG No.] 52H
6. ✱-INDICATES ITEMS SUPPLIED BY ELLIOTT CO.
7. GSLCP - DENOTES CONNECTION TO GLYCOL SYS LOCAL CONTROL PANEL, MOUNTED ON GLYCOL CIRCULATING PUMP SKID DWG 3847-3-131.

✱✱ INDICATES ITEMS FURNISHED WITH RECEIVER

GEM CODE*: N01-RB18-001 THRU 008, N02-RB18-001 THRU 008
N01-RA31-001, N02-RA31-001
B & V DRAWING*: 62.0200.05-C4017

B&V DWG NO: 62.0200.05-C4017

This print and all information thereon is the property of Wheelabrator A.P.C. It is confidential and proprietary and must not be used, made public, or copied unless authorized in writing by Wheelabrator A.P.C. It is transmitted to you with the explicit understanding that it is subject to return upon request.

NOTE
FABRICATION, MANUFACTURING, OR DETAILING MAY PROCEED ONLY WHEN DRAWING IS ISSUED OR AUTHORIZED FOR SUCH PURPOSES.

| NO. | REVISION | DWN. | CHK. | DATE |
|---|---|---|---|---|
| 3 | REDRAWN | VEC | | 1-18-00 |
| 2 | REVISED AS NOTED | VEC | | 3-15-00 |
| 0 | REVISED AS NOTED | VEC | | 7-20-00 |
| 1 | REVISED AS NOTED | RWK | | 12-7-00 |
| 2 | REVISED AS NOTED | PLP | | 2-5-01 |

| NO. | REVISION | DWN. | CHK. | DATE |
|---|---|---|---|---|
| | | | | |

ISSUE RECORD

| REV. | DATE | TO | FOR |
|---|---|---|---|
| A | 11-8-99 | FOSTER WHEELER | APPROVAL |
| B | 1-18-00 | FOSTER WHEELER | APPROVAL |
| C | 3-15-00 | FOSTER WHEELER | APPROVAL |
| 0 | 7-20-00 | FOSTER WHEELER | CONSTRUCTION |
| 0 | 9-8-00 | | ERECTION BID |

| REV. | DATE | TO | FOR |
|---|---|---|---|
| 1 | 12-8-00 | FOSTER WHEELER | CONSTRUCTION |
| 1 | 1-15-01 | PIP. SUB/FIELD | CONSTRUCTION |
| 2 | 2-5-01 | FOSTER WHEELER | CONSTRUCTION |

| REV. | DATE | TO | FOR |
|---|---|---|---|
| | | | |

DRN. BY JRU DATE 10-15-99
CHKD. BY DATE
APPVD. BY PHP DATE 7-20-00
SCALE NONE
CERTIFIED
BY: DATE:

FOSTER WHEELER
JACKSONVILLE ELECTRIC AUTHORITY
UNIT #1 & #2 REPOWERING PROJECT

PIPING & INSTRUMENTATION DIAGRAM
AIR COMPRESSOR SYSTEM

Wheelabrator Air Pollution Control
A Waste Management Company

DRAWING NUMBER 3847-3-130 REV. NO. 2

m:\contract\3847\cad\38473130.dgn

PLOT DATE: 05 FEB 2001 13:00:41

CRA33213 28-OCT-2002 12:18:28

P062713.62.0200.05-C4017 St:RD 03/03/01 MM-01611

CRA33213 28-OCT-2002 12:17:00

3847-3-131

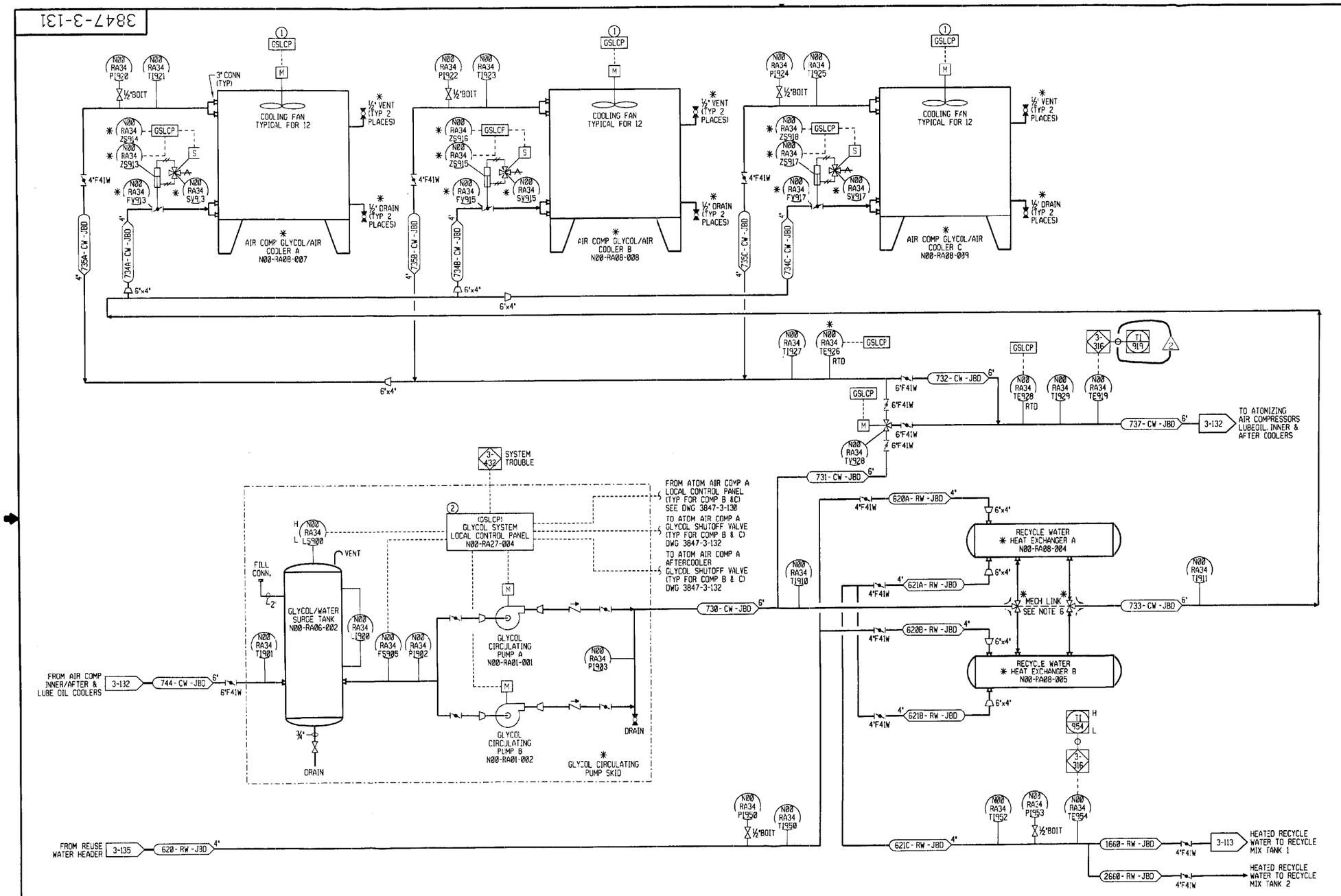


## INSTRUMENTATION NOTES:

1. FANS WILL AUTOMATICALLY CYCLE ON & OFF TO MAINTAIN GLYCOL TEMPERATURE.
2. STANDBY PUMP WILL AUTOMATICALLY START IF OPERATING PUMP TRIPS.

## NOTES:

1. FOR GENERAL NOTES & LEGEND SEE DWG'S. 3847-3-100 & 101.
2. DCS CONTROL SYSTEM IS BY OTHERS.
3. ALL 480V MOTOR DRIVEN EQUIPMENT SHALL HAVE THE FOLLOWING DCS I/O POINTS UNLESS OTHERWISE NOTED:

   START COMMAND [ MOTOR TAG No. ] CSR
   CNTL PWR/RUNNING [ MOTOR TAG No. ] 42A
   CNTL PWR/STOPPED [ MOTOR TAG No. ] 42B

4. ✱-INDICATES ITEMS SUPPLIED BY ELLIOTT CO.
5. GSLCP - DENOTES CONNECTION TO GLYCOL SYS LOCAL CONTROL PANEL, MOUNTED ON GLYCOL CIRCULATING PUMP SKID (THIS DWG).
6. HEAT EXCHANGER GLYCOL SUPPLY THREE WAY VALVES ARE LINKED TOGETHER SO THAT BOTH VALVES WILL OPERATE WHEN THE GLYCOL SYS. IS SWITCHED FROM ONE HEAT EXCHANGER TO THE OTHER.

GEM CODE*: N01-RB18-001 THRU 008, N02-RB18-001 THRU 008
N01-RA31-001, N02-RA31-001
B & V DRAWING*: 62.0200.05-C4018

This print and all information thereon is the property of Wheelabrator A.P.C. It is confidential and proprietary and must not be used, made public, or copied unless authorized in writing by Wheelabrator A.P.C. It is transmitted to you with the explicit understanding that it is subject to return upon request.

NOTE
FABRICATION, MANUFACTURING, OR DETAILING MAY PROCEED ONLY WHEN DRAWING IS ISSUED OR AUTHORIZED FOR SUCH PURPOSES.

| NO. | REVISION | DWN. | CHK. | DATE |
|---|---|---|---|---|
| B | REDRAWN | JEO | | 1-18-00 |
| C | REVISED AS NOTED | JEO | | 3-15-00 |
| 0 | REVISED AS NOTED | JEO | | 7-20-00 |
| 1 | REVISED AS NOTED | JEO | | |
| 2 | REVISED AS NOTED | JEO | | 6-11-01 |

| NO. | REVISION | DWN. | CHK. | DATE |
|---|---|---|---|---|
| | | | | |

ISSUE RECORD

| REV. | DATE | TO | FOR |
|---|---|---|---|
| A | 11-8-99 | FOSTER WHEELER | APPROVAL |
| B | 1-18-00 | FOSTER WHEELER | APPROVAL |
| C | 3-15-00 | FOSTER WHEELER | APPROVAL |
| 0 | 7-20-00 | FOSTER WHEELER | CONSTRUCTION |
| 0 | 9-8-00 | | ERECTION BID |

| REV. | DATE | TO | FOR |
|---|---|---|---|
| 1 | 12-6-00 | FOSTER WHEELER | CONSTRUCTION |
| 1 | 1-15-01 | PIP, SUBFIELD | CONSTRUCTION |
| 2 | 6-11-01 | FOSTER WHEELER | CONSTRUCTION |

| REV. | DATE | TO | FOR |
|---|---|---|---|
| | | | |

| | | | |
|---|---|---|---|
| DRN. BY | JRU | DATE | 10-15-99 |
| CHK'D. BY | | DATE | |
| APP'VD. BY | DHP | DATE | 7-20-00 |
| SCALE | NONE | | |
| CERTIFIED BY: | | DATE: | |

FOSTER WHEELER
JACKSONVILLE ELECTRIC AUTHORITY
UNIT #1 & #2 REPOWERING PROJECT

PIPING & INSTRUMENTATION DIAGRAM
GLYCOL COOLING SYSTEM
SH. 1

Wheelabrator Air Pollution Control
A Waste Management Company

DRAWING NUMBER 3847-3-131 REV. NO. 2

m:\contract\3847 jea\cad\38473131.dgn

PLOT DATE: 11 JUN 2001 15:08:05
LAST PLOTTED BY: JEO

CRA33213 28-OCT-2002 12:16:22

3847-3-132

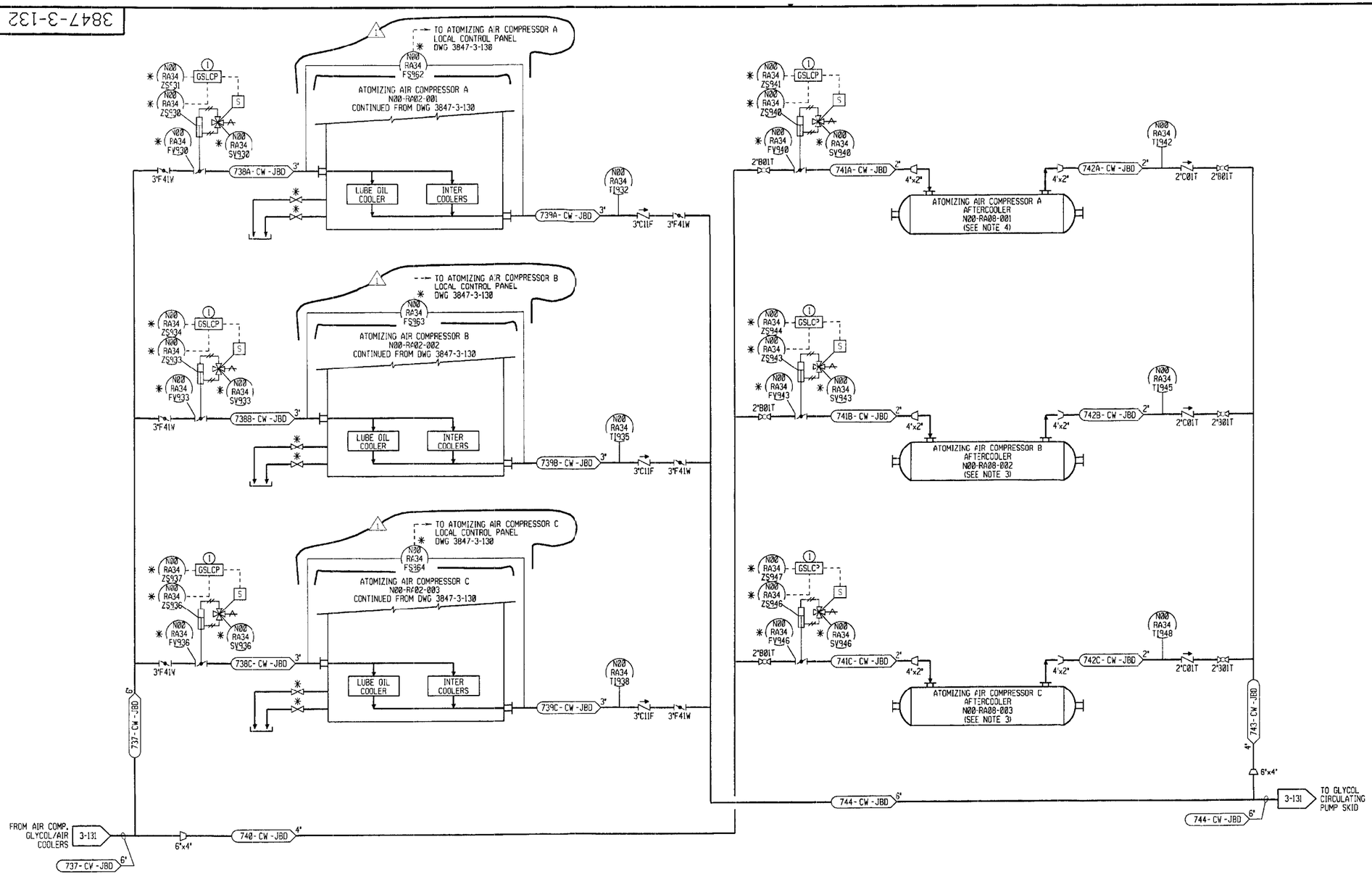


## INSTRUMENTATION NOTES:

1. VALVES OPEN WHEN ASSOCIATED COMPRESSOR STARTS.

## NOTES:

1. FOR GENERAL NOTES & LEGEND SEE DWG'S. 3847-3-100 & 101
2. DCS CONTROL SYSTEM IS BY OTHERS.
3. ALL 480V MOTOR DRIVEN EQUIPMENT SHALL HAVE THE FOLLOWING DCS I/O POINTS UNLESS OTHERWISE NOTED:

   START COMMAND [ MOTOR TAG No. ] CSR
   CNTL PWR/RUNNING [ MOTOR TAG No. ] 42A
   CNTL PWR/STOPPED [ MOTOR TAG No. ] 42B
4. FOR ATOMIZING AIR PIPING SEE DWG 3847-3-130
5. ✱-INDICATES ITEMS SUPPLIED BY ELLIOTT CO.
6. [GSLCP]- DENOTES CONNECTION TO GLYCOL SYS LOCAL CONTROL PANEL, MOUNTED ON GLYCOL CIRCULATING PUMP SKID DWG 3847-3-131

GEM CODE*: N01-RB18-001 THRU 008, N02-RB18-001 THRU 008
N01-RA31-001, N02-RA31-001
B & V DRAWING*: 62.0200.05-C4019

B&V DWG NO: 62.0200.05-C4019

This print and all information thereon is the property of Wheelabrator A.P.C. It is confidential and proprietary and must not be used, made public, or copied unless authorized in writing by Wheelabrator A.P.C. It is transmitted to you with the explicit understanding that it is subject to return upon request.

NOTE
FABRICATION, MANUFACTURING, OR DETAILING MAY PROCEED ONLY WHEN DRAWING IS ISSUED OR AUTHORIZED FOR SUCH PURPOSES.

| NO. | REVISION | DWN. | CHK. | DATE |
|---|---|---|---|---|
| B | REDRAWN | JEO | | 1-18-00 |
| C | REVISED AS NOTED | JEO | | 3-15-00 |
| D | REVISED AS NOTED | JEO | | 7-20-00 |
| 1 | REVISED AS NOTED | JEO | | 2-5-01 |

| NO. | REVISION | DWN. | CHK. | DATE |
|---|---|---|---|---|
| | | | | |

ISSUE RECORD

| REV. | DATE | TO | FOR |
|---|---|---|---|
| A | 11-8-99 | FOSTER WHEELER | APPROVAL |
| B | 1-18-00 | FOSTER WHEELER | APPROVAL |
| C | 3-15-00 | FOSTER WHEELER | APPROVAL |
| D | 7-20-00 | FOSTER WHEELER | CONSTRUCTION |
| D | 9-8-00 | | ERECTION BID |

| REV. | DATE | TO | FOR |
|---|---|---|---|
| 0 | 1-15-01 | PIP. SUBFIELD | CONSTRUCTION |
| 1 | 2-5-01 | FOSTER WHEELER | CONSTRUCTION |

| REV. | DATE | TO | FOR |
|---|---|---|---|
| | | | |

DRN. BY JRU DATE 12-15-99
CHKD. BY DATE
APPVD. BY PHP DATE 7-20-00
SCALE NONE
CERTIFIED
BY: DATE:

FOSTER WHEELER
JACKSONVILLE ELECTRIC AUTHORITY
UNIT #1 & #2 REPOWERING PROJECT

PIPING & INSTRUMENTATION DIAGRAM
GLYCOL COOLING SYSTEM
SH. 2

Wheelabrator Air Pollution Control
A Waste Management Company

DRAWING NUMBER 3847-3-132
REV. NO. 1

m:\contract\3847\cad\38473132.dgn

PLOT DATE: 05 FEB 2001 13:00:50
LAST PLOTTED BY: [illegible]

P062713.62.0200.05-C4019 St:RD 03/03/01 MM-01611

3847-3-133

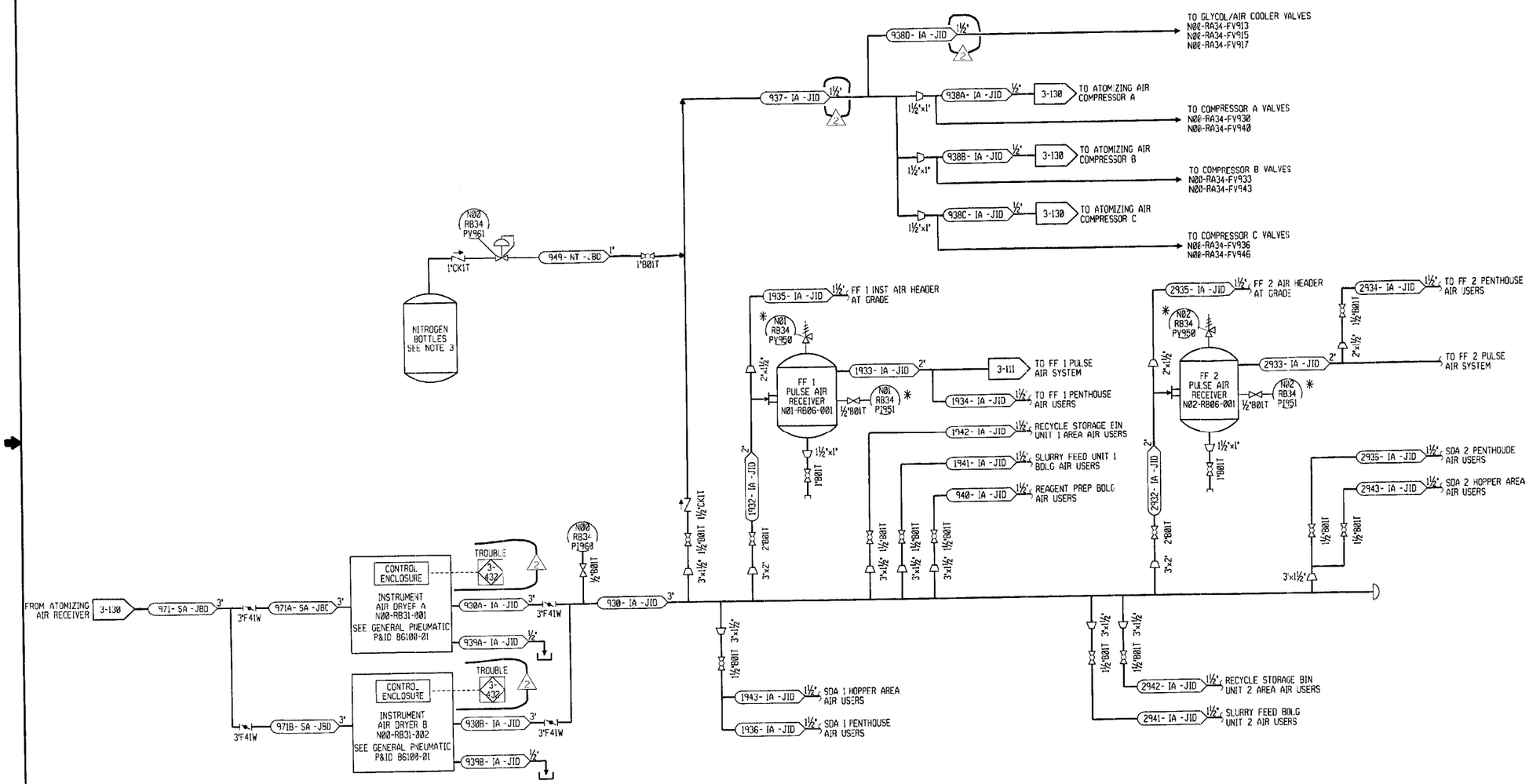


GEM CODE*: N01-RB18-001 THRU 008, N02-RB18-001 THRU 008
N01-RA31-001, N02-RA31-001
B & V DRAWING*: 62.0200.05-C4020

NOTES:

1. FOR GENERAL NOTES & LEGEND SEE DWG'S. 3847-3-00 & 101
2. DCS CONTROL SYSTEM IS BY OTHERS.
3. NITROGEN IS REQUIRED FOR COMPRESSOR SEALS DURING INITIAL START-UP, AFTER COMPRESSOR IS RUNNING AND INSTRUMENT AIR SUPPLY IS ESTABLISHED NITROGEN IS NO LONGER REQUIRED.

* INDICATES FURNISHED WITH RECEIVER

B&V DWG NO: 62.0200.05-C4020

This print and all information thereon is the property of Wheelabrator A.P.C. It is confidential and proprietary and must not be used, made public, or copied unless authorized in writing by Wheelabrator A.P.C. It is transmitted to you with the explicit understanding that it is subject to return upon request.

NOTE
FABRICATION, MANUFACTURING, OR DETAILING MAY PROCEED ONLY WHEN DRAWING IS ISSUED OR AUTHORIZED FOR SUCH PURPOSES.

| NO. | REVISION | DWN. | CHK. | DATE |
|---|---|---|---|---|
| B | REVISED AS NOTED | REC | | 1-16-00 |
| C | REVISED AS NOTED | JEO | | 3-15-00 |
| 0 | REDRAWN | JEO | | 7-20-00 |
| 1 | REVISED AS NOTED | RWK | | 12-7-00 |
| 2 | REVISED AS NOTED | JEO | | 2-5-01 |

| NO. | REVISION | DWN. | CHK. | DATE |
|---|---|---|---|---|
| | | | | |

ISSUE RECORD

| REV. | DATE | TO | FOR |
|---|---|---|---|
| A | 11-8-99 | FOSTER WHEELER | APPROVAL |
| B | 1-18-00 | FOSTER WHEELER | APPROVAL |
| C | 3-15-00 | FOSTER WHEELER | APPROVAL |
| 0 | 7-20-00 | FOSTER WHEELER | CONSTRUCTION |
| 0 | 9-8-00 | | ERECTION BID |

| REV. | DATE | TO | FOR |
|---|---|---|---|
| 1 | 12-8-00 | FOSTER WHEELER | CONSTRUCTION |
| 1 | 1-15-01 | PIP. SUB/FIELD | CONSTRUCTION |
| 2 | 2-5-01 | FOSTER WHEELER | CONSTRUCTION |

| REV. | DATE | TO | FOR |
|---|---|---|---|
| | | | |

DRN. BY JRU DATE 10-15-99
CHKD. BY DATE
APPVD. BY PHP DATE 7-20-00
SCALE NONE
CERTIFIED
BY: DATE:

FOSTER WHEELER
JACKSONVILLE ELECTRIC AUTHORITY
UNIT #1 & #2 REPOWERING PROJECT

PIPING & INSTRUMENTATION DIAGRAM
INSTRUMENT AIR SYSTEM

Wheelabrator Air Pollution Control
A Waste Management Company

DRAWING NUMBER 3847-3-133 REV. NO. 2

PLOT DATE: 05 FEB 2001 13:00:58
LAST PLOTTED BY: JEO

m:\contract\3847\cad\38473133.dgn

CRA33213 28-OCT-2002 12:50:10

3847-3-134

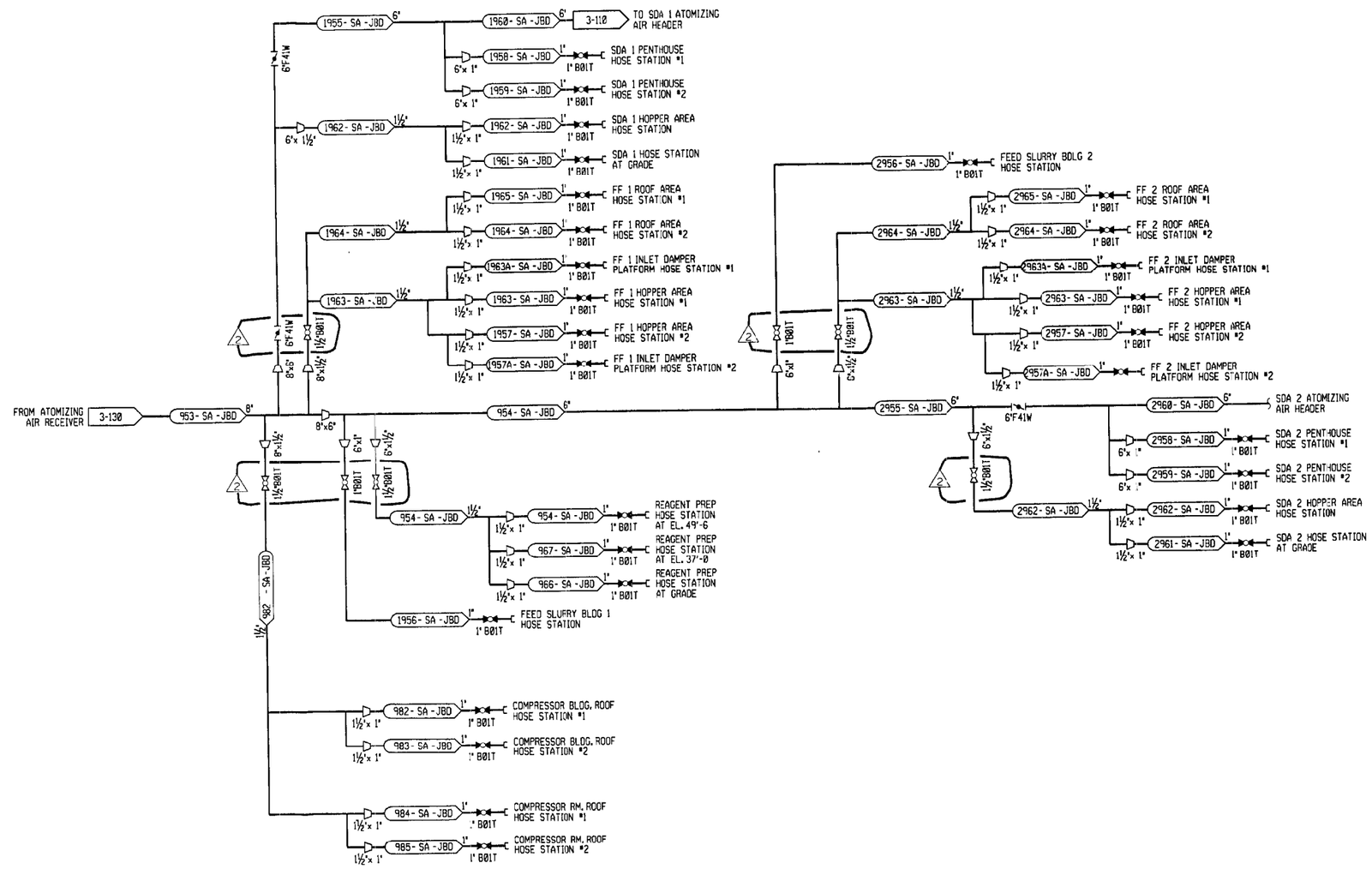


NOTES:

1. FOR GENERAL NOTES & LEGEND SEE DWG'S. 3847-3-100 & 101
2. DCS CONTROL SYSTEM IS BY OTHERS.

GEM CODE#: N01-RB18-001 THRU 008, N02-RB18-001 THRU 008
N01-RA31-001, N02-RA31-001

B & V DRAWING#: 62.0200.05-C4021

This print and all information thereon is the property of Wheelabrator A.P.C. It is confidential and proprietary and must not be used, made public, or copied unless authorized in writing by Wheelabrator A.P.C. It is transmitted to you with the explicit understanding that it is subject to return upon request.

NOTE
FABRICATION, MANUFACTURING, OR DETAILING MAY PROCEED ONLY WHEN DRAWING IS ISSUED OR AUTHORIZED FOR SUCH PURPOSES.

| NO. | REVISION | DRN. | CHK. | DATE | NO. | REVISION | DRN. | CHK. | DATE |
|---|---|---|---|---|---|---|---|---|---|
| B | REVISED AS NOTED | JRG | | 1-18-00 | | | | | |
| C | REVISED AS NOTED | JEG | | 3-15-00 | | | | | |
| Ø | REDRAWN | JEG | | 7-20-99 | | | | | |
| 1 | REVISED AS NOTED | RWL | | 12-7-00 | | | | | |
| 2 | REVISED AS NOTED | JEG | | 6-11-01 | | | | | |

ISSUE RECORD

| REV. | DATE | TO | FOR | REV. | DATE | TO | FOR | REV. | DATE | TO | FOR |
|---|---|---|---|---|---|---|---|---|---|---|---|
| A | 11-8-99 | FOSTER WHEELER | APPROVAL | 1 | 12-8-00 | FOSTER WHEELER | CONSTRUCTION | | | | |
| B | 1-18-00 | FOSTER WHEELER | APPROVAL | 1 | 1-15-01 | PIP. SUB/FIELD | CONSTRUCTION | | | | |
| C | 3-15-00 | FOSTER WHEELER | APPROVAL | 2 | 6-11-01 | FOSTER WHEELER | CONSTRUCTION | | | | |
| Ø | 7-20-00 | FOSTER WHEELER | CONSTRUCTION | | | | | | | | |
| Ø | 9-8-00 | | ERECTION BLD. | | | | | | | | |

DRN. BY JRU DATE 10-18-99
CHKD. BY DATE
APPVD. BY PHP DATE 7-20-00
SCALE NONE
CERTIFIED
BY: DATE:

FOSTER WHEELER
JACKSONVILLE ELECTRIC AUTHORITY
UNIT #1 & #2 REPOWERING PROJECT

PIPING & INSTRUMENTATION DIAGRAM
ATOMIZING/SERVICE AIR SYS.

Wheelabrator Air Pollution Control
A Waste Management Company

DRAWING NUMBER 3847-3-134 REV. NO. 2

PLOT DATE: 11 JUN 2001 15:08:13
LAST PLOTTED BY: JEO

m:\contract\3847 jea\cad\38473134.dgn

CRA33213 28-OCT-2002 12:49:39

P062713.62.0200.05-C4021 St:RD 07/16/01 MM-02052

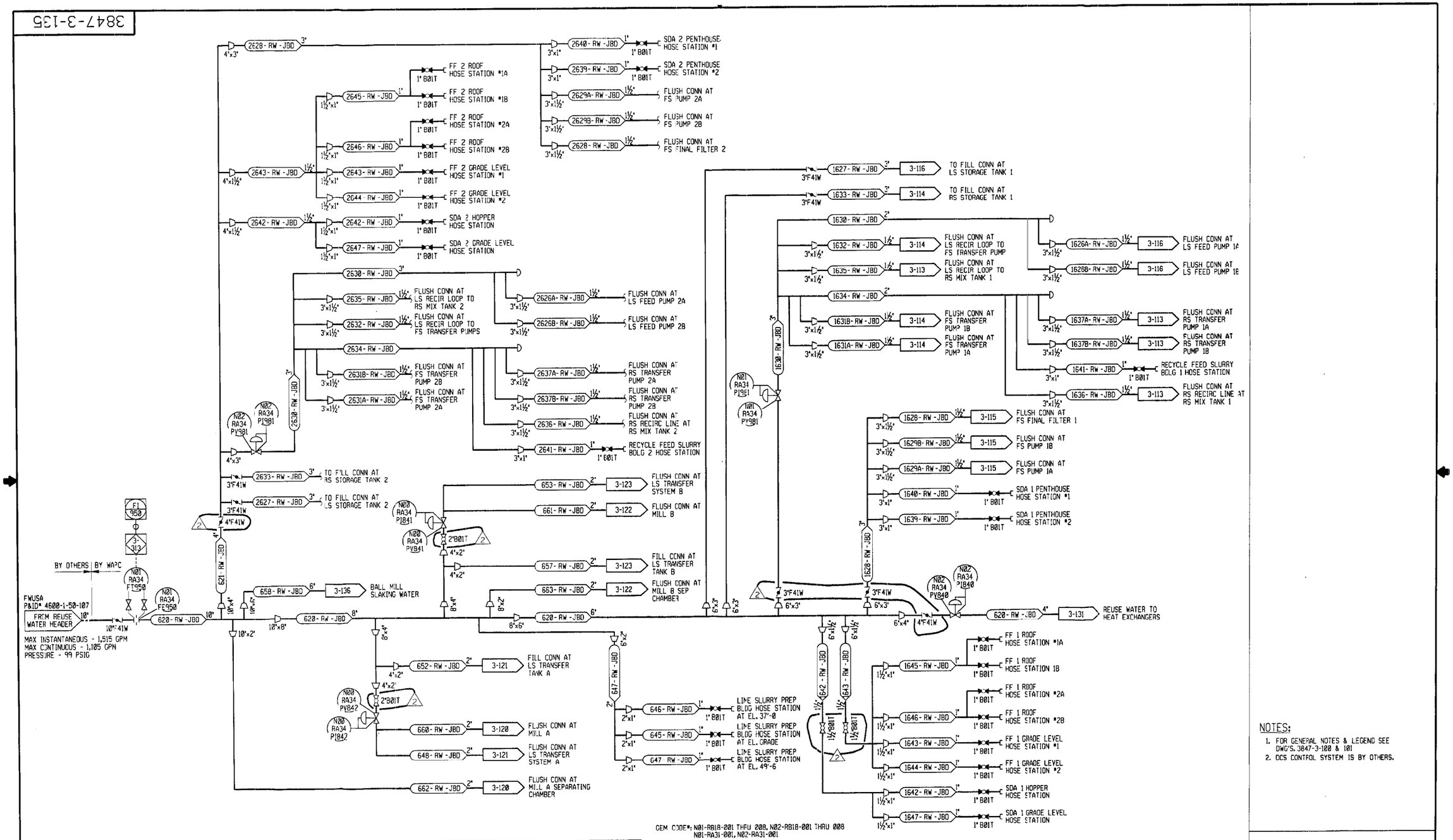


NOTES:

1. FOR GENERAL NOTES & LEGEND SEE DWG'S. 3847-3-100 & 101
2. DCS CONTROL SYSTEM IS BY OTHERS.

GEM CODE#: N01-RB18-001 THRU 008, N02-RB18-001 THRU 008
N01-RA31-001, N02-RA31-001

B & V DRAWING#: 62.0200.05-C4022

This print and all information thereon is the property of Wheelabrator A.P.C. It is confidential and proprietary and must not be used, made public, or copied unless authorized in writing by Wheelabrator A.P.C. It is transmitted to you with the explicit understanding that it is subject to return upon request.

NOTE
FABRICATION, MANUFACTURING, OR DETAILING MAY PROCEED ONLY WHEN DRAWING IS ISSUED OR AUTHORIZED FOR SUCH PURPOSES.

| NO. | REVISION | DWN. | CK. | DATE | NO. | REVISION | DWN. | CK. | DATE |
|---|---|---|---|---|---|---|---|---|---|
| B | REVISED AS NOTED | RES | | 1-18-00 | | | | | |
| C | REVISED AS NOTED | JEO | | 3-15-00 | | | | | |
| 0 | REDRAWN | JEO | | 7-20-00 | | | | | |
| 1 | REVISED AS NOTED | RWA | | 8-10-00 | | | | | |
| 2 | REVISED AS NOTED | JEO | | 6-11-01 | | | | | |

ISSUE RECORD

| REV. | DATE | TO | FOR |
|---|---|---|---|
| A | 11-8-99 | FOSTER WHEELER | APPROVAL |
| B | 1-18-00 | FOSTER WHEELER | APPROVAL |
| C | 3-15-00 | FOSTER WHEELER | APPROVAL |
| 0 | 7-20-00 | FOSTER WHEELER | CONSTRUCTION |
| 0 | 9-8-00 | | ERECTION BLD |
| 1 | 12-8-00 | FOSTER WHEELER | CONSTRUCTION |
| 1 | 1-15-01 | PIP. SUB/FIELD | CONSTRUCTION |
| 2 | 6-11-01 | FOSTER WHEELER | CONSTRUCTION |

| REV. | DATE | TO | FOR |
|---|---|---|---|
| | | | |

| | | | |
|---|---|---|---|
| DRN. BY | JRU | DATE | 10-19-99 |
| CHKD. BY | | DATE | |
| APPVD. BY | PHP | DATE | 7-20-00 |
| SCALE | NONE | | |
| CERTIFIED BY: | | DATE: | |

FOSTER WHEELER
JACKSONVILLE ELECTRIC AUTHORITY
UNIT #1 & #2 REPOWERING PROJECT

PIPING & INSTRUMENTATION DIAGRAM
REUSE WATER SYSTEM

Wheelabrator Air Pollution Control
A Waste Management Company

DRAWING NUMBER 3847-3-135 REV. NO. 2

m:\contract\3847 jea\cad\38473135.dgn

PLOT DATE: 11 JUN 2001 15:08:21
LAST PLOTTED BY: JED

CRA33213 28-OCT-2002 12:49:08

3847-3-136

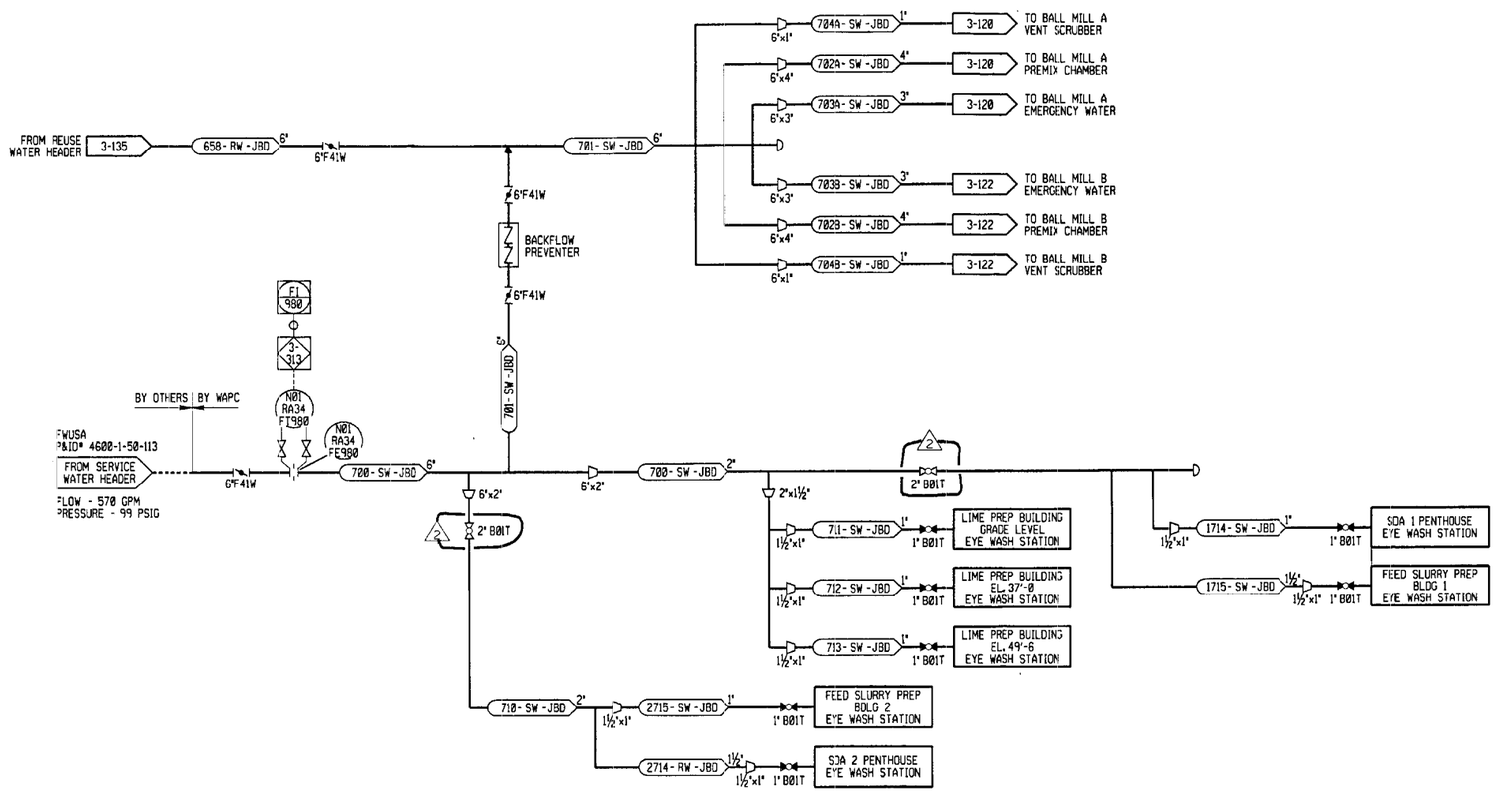


NOTES:

1. FOR GENERAL NOTES & LEGEND SEE DWG'S. 3847-3-100 & 101
2. DCS CONTROL SYSTEM IS BY OTHERS.

GEM CODE*: N01-RB18-001 THRU 008, N02-RB18-001 THRU 008
N01-RA31-001, N02-RA31-001
B & V DRAWING*: 62.0200.05-C4026

This print and all information thereon is the property of Wheelabrator A.P.C. It is confidential and proprietary and must not be used, made public, or copied unless authorized in writing by Wheelabrator A.P.C. It is transmitted to you with the explicit understanding that it is subject to return upon request.

NOTE
FABRICATION, MANUFACTURING, OR DETAILING MAY PROCEED ONLY WHEN DRAWING IS ISSUED OR AUTHORIZED FOR SUCH PURPOSES.

| NO. | REVISION | DWN. | CHK. | DATE |
|---|---|---|---|---|
| B | REVISED AS NOTED | RES | | 1-18-00 |
| C | REVISED AS NOTED | JRU | | 3-15-00 |
| A | REDRAWN | JEO | | 7-20-00 |
| 1 | REVISED AS NOTED | DD | | 12-7-00 |
| 2 | REVISED AS NOTED | JEO | | 6-11-01 |

| NO. | REVISION | DWN. | CHK. | DATE |
|---|---|---|---|---|
| | | | | |

ISSUE RECORD

| REV. | DATE | TO | FOR |
|---|---|---|---|
| A | 11-8-99 | FOSTER WHEELER | APPROVAL |
| B | 1-18-00 | FOSTER WHEELER | APPROVAL |
| C | 3-15-00 | FOSTER WHEELER | APPROVAL |
| 0 | 7-20-00 | FOSTER WHEELER | CONSTRUCTION |
| 0 | 9-8-00 | | ERECTION BID |

| REV. | DATE | TO | FOR |
|---|---|---|---|
| 1 | 12-8-00 | FOSTER WHEELER | CONSTRUCTION |
| 1 | 1-15-01 | PIP, SUB/FIELD | CONSTRUCTION |
| 2 | 6-11-01 | FOSTER WHEELER | CONSTRUCTION |

| REV. | DATE | TO | FOR |
|---|---|---|---|
| | | | |

| | | | |
|---|---|---|---|
| DRN. BY | JRU | DATE | 10-18-99 |
| CHKD. BY | | DATE | |
| APPVD. BY | PHP | DATE | 7-20-00 |
| SCALE | NONE | | |
| CERTIFIED BY: | | DATE: | |

FOSTER WHEELER
JACKSONVILLE ELECTRIC AUTHORITY
UNIT #1 & #2 REPOWERING PROJECT

PIPING & INSTRUMENTATION DIAGRAM
SERVICE WATER SYSTEM

Wheelabrator Air Pollution Control
A Waste Management Company

DRAWING NUMBER 3847-3-136
REV. NO. 2

m:\contract\3847 jea\cad\38473136.dgn

PLOT DATE: 11 JUN 2001 15:08:32
LAST PLOTTED BY: JEO

CRA33213 28-OCT-2002 12:47:25

P062713.62.0200.05-C4026 St:RD 07/16/01 MM-02052

**Foster Wheeler USA Corporation** — **WAPC Contract 3847**
**JEA Northside Units 1&2 Repowering Project** — **June2, 2000**

**AQCS System Mass Balances**

| | | | |
|---|---|---|---|
| **Foster Wheeler USA** | **Order No.** | **PP-0005-13-004600-00** | **WAPC Document Number** **3847-001; Rev No. 3** |
| | **Contract No.** | **13-004600** | |
| | **Requistion Number** | **4605-2356B** | |

| | **FWUSA Tag No.** | **JEA Tag No.** |
|---|---|---|
| **Scrubber Unit No. 1** | **FG-SC-201-T1** | **NO1-BO06-1** |
| **Scrubber Unit No. 2** | **FG-SC-201-T2** | **NO2-BO06-1** |
| **Particulate Collector Unit No. 1** | **FG-F-206-T1** | **NO1-BO18-1** |
| **Particulate Collector Unit No. 2** | **FG-F-206-T2** | **NO2-BO18-1** |

| Boiler Load % MCR | Fuel | % CFB SO2 Removal | Sheets | Boiler Load % MCR | Fuel | % CFB SO2 Removal | Sheets |
|---|---|---|---|---|---|---|---|
| 100% | Coke : Perfromance | 90% | 100 - 1 to 3 | 50% | Coke : Perfromance | 90% | 50 - 1 to 3 |
| 100% | Coke : Perfromance | 85% | 100 - 4 to 6 | 50% | Coke : Perfromance | 85% | 50 - 4 to 6 |
| 100% | Coke : Perfromance | 75% | 100 - 7 to 9 | 50% | Coke : Perfromance | 75% | 50 - 7 to 9 |
| 100% | Coke: Worst SO2 | 90% | 100 - 10 to 12 | 50% | Coke: Worst SO2 | 90% | 50 - 10 to 12 |
| 100% | Coke: Worst SO2 | 85% | 100 - 13 to 15 | 50% | Coke: Worst SO2 | 85% | 50 - 13 to 15 |
| 100% | Coke: Worst SO2 | 75% | 100 - 16 to 18 | 50% | Coke: Worst SO2 | 75% | 50 - 16 to 18 |
| 100% | Coal: Performance | 90% | 100 - 19 to 21 | 50% | Coal: Performance | 90% | 50 - 19 to 21 |
| 100% | Coal: Performance | 85% | 100 - 22 to 24 | 50% | Coal: Performance | 85% | 50 - 22 to 24 |
| 100% | Coal: Performance | 75% | 100 - 25 to 27 | 50% | Coal: Performance | 75% | 50 - 25 to 27 |
| 85% | Coal: Worst SO2 | 90% | 100 - 28 to 30 | 50% | Coal: Worst SO2 | 90% | 50 - 28 to 30 |
| 85% | Coal: Worst SO2 | 85% | 100 - 31 to 33 | 50% | Coal: Worst SO2 | 85% | 50 - 31 to 33 |
| 85% | Coal: Worst SO2 | 75% | 100 - 34 to 36 | 50% | Coal: Worst SO2 | 75% | 50 - 34 to 36 |
| 100% | Coke: Worst NOx | 90% | 100 - 37 to 39 | 50% | Coke: Worst NOx | 90% | 50 - 37 to 39 |
| 100% | Coke: Worst NOx | 85% | 100 - 40 to 42 | 50% | Coke: Worst NOx | 85% | 50 - 40 to 42 |
| 100% | Coke: Worst NOx | 75% | 100 - 43 to 45 | 50% | Coke: Worst NOx | 75% | 50 - 43 to 45 |
| 85% | Coal: Worst NOx | 90% | 100 - 46 to 48 | 50% | Coal: Worst NOx | 90% | 50 - 46 to 48 |
| 85% | Coal: Worst NOx | 85% | 100 - 49 to 51 | 50% | Coal: Worst NOx | 85% | 50 - 49 to 51 |
| 85% | Coal: Worst NOx | 75% | 100 - 52 to 54 | 50% | Coal: Worst NOx | 75% | 50 - 52 to 54 |
| 75% | Coke : Perfromance | 90% | 75 - 1 to 3 | | | | |
| 75% | Coke : Perfromance | 85% | 75 - 4 to 6 | | | | |
| 75% | Coke : Perfromance | 75% | 75 - 7 to 9 | | | | |
| 75% | Coke: Worst SO2 | 90% | 75 - 10 to 12 | | | | |
| 75% | Coke: Worst SO2 | 85% | 75 - 13 to 15 | | | | |
| 75% | Coke: Worst SO2 | 75% | 75 - 16 to 18 | | | | |
| 75% | Coal: Performance | 90% | 75 - 19 to 21 | | | | |
| 75% | Coal: Performance | 85% | 75 - 22 to 24 | | | | |
| 75% | Coal: Performance | 75% | 75 - 25 to 27 | | | | |
| 75% | Coal: Worst SO2 | 90% | 75 - 28 to 30 | | | | |
| 75% | Coal: Worst SO2 | 85% | 75 - 31 to 33 | | | | |
| 75% | Coal: Worst SO2 | 75% | 75 - 34 to 36 | | | | |
| 75% | Coke: Worst NOx | 90% | 75 - 37 to 39 | | | | |
| 75% | Coke: Worst NOx | 85% | 75 - 40 to 42 | | | | |
| 75% | Coke: Worst NOx | 75% | 75 - 43 to 45 | | | | |
| 75% | Coal: Worst NOx | 90% | 75 - 46 to 48 | | | | |
| 75% | Coal: Worst NOx | 85% | 75 - 49 to 51 | | | | |
| 75% | Coal: Worst NOx | 75% | 75 - 52 to 54 | | | | |

B&V Drawing No: 62.0200.05-C4001

CRA33213 28-OCT-2002 11:58:31

CRA33213 28-OCT-2002 12:05:22

**Foster Wheeler USA Corporation** — **WAPC Contract 3847**
**JEA Northside Units 1&2 Repowering Project** — **June 2, 2000**
**100% MCR; COKE: PEFROMANCE; 85% FB REM; 25% of CaO in fly ash is available** — **Rev #3**
**30 Deg F Approach Temperature**

| | F1.1 Unit 1 SDA Inlet | F2.1 Unit 1 SDA Inleak | F3.1 Unit 1 SDA Atom Air | F4.1 Unit 1 SDA Out | F5.1 Unit 1 FF Inleak | F6.1 Unit 1 FF Out | F7.1 Unit 1 Fluidizing Blower/ Heater Out | F8.1 Unit 1 Recycle Bin Fluidizing Air | F9.1 Unit 1 FF Fluidizing Air | 10.1 Not Used | F10.1 Not Used | F11.1 Slaker A or B Lime Conveying Air | F12.1 Lime Silo Vent Discharge | FA1 Slaker A or B Mill Vent Scrubber Fresh Air Inlet | FA2 Slaker A or B Mill Vent Scrubber Exhaust |
|---|---|---|---|---|---|---|---|---|---|---|---|---|---|---|---|
| lb/min CO2 | 9,458.0 | 0.0 | 0.0 | 9,458.0 | 0.0 | 9,458.0 | | | | | | | | | |
| lb/min O2 | 1,524.0 | 92.5 | 69.0 | 1,685.5 | 199.7 | 1,885.3 | 4.3 | 2.2 | 2.2 | | | 13.4 | 13.4 | 16.8 | 17.2 |
| lb/min N2 | 30,345.8 | 303.9 | 198.8 | 30,848.5 | 656.0 | 31,504.5 | 14.2 | 7.1 | 7.1 | | | 38.4 | 38.4 | 63.1 | 65.0 |
| lb/min H2O | 2,081.0 | 7.9 | 1.5 | 3,342.5 | 17.1 | 3,359.6 | 0.4 | 0.2 | 0.2 | | | 6.3 | 6.3 | 2.6 | 7.1 |
| lb/min SO2 | 61.97 | | | 13.42 | | 6.53 | | | | | | | | | |
| lb/min HCl | 6.50 | | | 2.90 | | 1.45 | | | | | | | | | |
| lb/min HF | 0.46 | | | 0.01 | | 0.01 | | | | | | | | | |
| lb/min SO3 | 2.34 | | | 2.34 | | 0.02 | | | | | | | | | |
| lb/min NOx | 3.92 | | | 3.92 | | 3.92 | | | | | | | | | |
| lb/min CO | 5.67 | | | 5.67 | | 5.67 | | | | | | | | | |
| lb/min VOC | 0.22 | | | 0.22 | | 0.22 | | | | | | | | | |
| lb/min NH3 | 0.37 | | | 0.37 | | 0.37 | | | | | | | | | |
| lb/min subtotal fluegas | 43,490.3 | 404.4 | 269.3 | 45,363.4 | 872.8 | 46,225.5 | 18.9 | 9.4 | 9.4 | | | 58.1 | 58.1 | 74.0 | 74.0 |
| lb/min CaO (available) | 32.4 | | | 27.5 | | 0.0 | | | | | | | | | |
| lb/min CaO (unavailable) | 85.9 | | | 167.7 | | 0.1 | | | | | | | | | |
| lb/min Ca(OH)2 | 0.0 | | | 87.6 | | 0.0 | | | | | | | | | |
| lb/min CaSO3°1/2H2O | | | | 207.9 | | 0.1 | | | | | | | | | |
| lb/min CaSO4 | 195.9 | | | 382.5 | | 0.2 | | | | | | | | | |
| Lb/min CaCl2 | 0.0 | | | 13.0 | | 0.0 | | | | | | | | | |
| lb/min CaF2 | 0.0 | | | 1.7 | | 0.0 | | | | | | | | | |
| lb/min Inerts | 21.2 | | | 68.0 | | 0.0 | | | | | | | | | |
| lb/min ash/unburned fuel | 13.4 | | | 26.2 | | 0.0 | | | | | | | | | |
| lb/min Pb | 0.12 | | | 0.10 | | 0.00 | | | | | | | | | |
| lb/min Hg | 7.40E-04 | | | 7.40E-04 | | 4.57E-04 | | | | | | | | | |
| lb/min subtotal solids | 348.8 | 0.0 | 0.0 | 982.2 | 0.0 | 0.5 | | | | | | | 0.0005 | | 0.0007 |
| lb/min total | 43839.1 | 407.3 | 266.6 | 46345.6 | 879.2 | 46238.5 | 18.9 | 9.4 | 9.4 | | | 58.1 | 58.1 | 74.0 | 74.0 |
| SCFM | 564,045 | 5,479 | 3,600 | 599,509 | 11,825 | 611,407 | 256 | 128 | 128 | | | 782 | 782 | 995 | 1,075 |
| SDCFM | 519,489 | 5,383 | 3,523 | 528,029 | 11,621 | 539,718 | 248 | 124 | 124 | | | 768 | 768 | 965 | 989 |
| ACFM | 831,673 | 5,605 | 612 | 736,777 | 12,098 | 765,443 | 219 | 110 | 110 | | | 781 | 800 | 1,020 | 1,181 |
| ACFM - Design | 879,280 | | 612 | 780,600 | | 810,000 | 274 | 137 | 137 | | | 800 | 800 | 1,185 | 1,185 |
| vol % CO2 | 14.7 | 0.0 | 0.0 | 13.8 | 0.0 | 13.5 | 0.0 | 0.0 | 0.0 | | | 0.0 | 0.0 | 0.0 | 0.0 |
| vol % O2 | 3.3 | 20.3 | 23.1 | 3.4 | 20.3 | 3.7 | 20.3 | 20.3 | 20.3 | | | 20.3 | 20.3 | 20.3 | 19.2 |
| vol % N2 | 74.1 | 76.4 | 76.0 | 70.9 | 76.4 | 71.0 | 76.4 | 76.4 | 76.4 | | | 76.4 | 76.4 | 76.4 | 72.8 |
| vol % H2O | 7.9 | 3.1 | 0.9 | 11.9 | 3.1 | 11.7 | 3.1 | 3.1 | 3.1 | | | 3.1 | 3.1 | 3.1 | 8.0 |
| ppm (v-wgb) SO2 | 662 | | | 135 | | 64 | | | | | | | | | |
| lb/MM Btu SO2 | 1.42 | | | 0.31 | | 0.15 | | | | | | | | | |
| ppm (v-wgb) HCl | 122 | | | 51 | | 25 | | | | | | | | | |
| lb/MM Btu HF | 0.0106 | | | 0.0002 | | 1.57E-04 | | | | | | | | | |
| lb/MM Btu SO3 | 0.054 | | | 0.054 | | 4.00E-04 | | | | | | | | | |
| ppm (v-wgb) NOx (as NO2) | 58 | | | 55 | | 54 | | | | | | | | | |
| ppm (v-wgb) CO | 138 | | | 130 | | 128 | | | | | | | | | |
| ppm (v-wgb) VOC as CH4 | 9 | | | 9 | | 9 | | | | | | | | | |
| ppm (v-wgb) NH3 | 15 | | | 14 | | 14 | | | | | | | | | |
| lb/ MM Btu Solid Particulate | 8.013 | | | 22.562 | | 0.011 | | | | | | | | | |
| gr/acf Solid Particulate | 2.918 | | | 9.332 | | 0.004 | | | | | | | 0.0048 | | 0.0042 |
| lb/MM Btu Pb | 2.8E-03 | | | 2.4E-03 | | 2.60E-05 | | | | | | | | | |
| lb/MM Btu Hg | 1.7E-05 | | | 1.7E-05 | | 1.05E-05 | | | | | | | | | |
| Tdb deg F | 280 | 80 | 120 | 152 | 80 | 150 | 300 | 300 | 300 | | | 80 | 80 | 80 | 120 |
| Twb deg F | 125 | 78 | 120 | 122 | 78 | 122 | | | | | | 78 | 78 | 78 | 109 |
| Tdp deg F | 105 | 76 | 120 | 119 | 76 | 119 | | | | | | 76 | 76 | 76 | 107 |
| Pa (in Hg) | 28.44 | 29.91 | 253.81 | 28.22 | 29.91 | 27.63 | 50.27 | 50.27 | 50.27 | | | 30.65 | 29.91 | 29.84 | 29.91 |
| Ps in. wg {psig} | -20.00 | 0.00 | {110} | -23.00 | 0.00 | -31.00 | {10} | {10} | {10} | | | 10.00 | 0.00 | -1.00 | 0.00 |



P062713.62.0200.05-C4001 0007 St:NE 08/03/00 MM-00732

CRA33213 28-OCT-2002 12:03:48



**100% MCR; COKE: PEFROMANCE; 85% FB REM; 25% of CaO in fly ash is available**
**30 Deg F Approach Temperature**

| | L1 Slaker A or B H2O (2 units) | L2 Total Dilution (Recycle) H2O | L3 Total Heated Dilution (Recycle) H2O | L3.1 Unit 1 Dilution H2O (Recycle H2O) to Mix Tank | L4.1 Unit 1 Lime Slurry to SDA | L5.1 Unit 1 Lime Slurry to Recycle Tank | L4.1+L5.1 Unit 1 Total Lime Slurry Feed | L6.1 Unit 1 Recycle Slurry Feed | L7.1 Unit 1 SDA Feed | L8.1 Unit 1 Lime Slurry Feed Pump Outlet | L9.1 Unit 1 Lime Slurry Feed Pump Return | L10.1 Unit 1 Feed Slurry Transfer Pump Outlet | L11.1 Unit 1 Feed Slurry Transfer Pump Return | L12.1 Unit 1 Recycle Transfer Pump Outlet | L13.1 Unit 1 Recycle Slurry Seperator Feed | L14.1 Unit 1 Recycle Transfer Pump Return | L15.1 From Local Sumps |
|---|---|---|---|---|---|---|---|---|---|---|---|---|---|---|---|---|---|
| Control Mode | On/Off | Batch Varaible | Batch Varaible | Batch Varaible | Batch Varaible | Batch Varaible | - | Continious Variable | Continious Variable | Continious | Continious | Continious | Continious | Batch On/Off | Batch On/Off | Batch On/Off | Batch On/Off |
| lb/min H2O | 604.3 | 1,934.1 | 1,934.1 | 967.0 | 281.0 | 0.0 | 281.0 | 971.0 | 1,252.0 | 2,373.9 | 2,092.9 | 1,841.3 | 589.3 | 1,503.8 | 971.0 | 532.8 | 0.0 |
| lb/min CaO (available) | 0.0 | 0.0 | 0.0 | 0.0 | 0.0 | 0.0 | 0.0 | 0.0 | 0.0 | 0.0 | 0.0 | 0.0 | 0.0 | 0.0 | 0.0 | 0.0 | 0.0 |
| lb/min CaO (unavailable) | 0.0 | 0.0 | 0.0 | 0.0 | 0.0 | 0.0 | 0.0 | 111.4 | 111.4 | 0.0 | 0.0 | 163.8 | 52.4 | 172.5 | 111.4 | 61.1 | 0.0 |
| lb/min Ca(OH)2 | 0.0 | 0.0 | 0.0 | 0.0 | 86.9 | 0.0 | 86.9 | 76.7 | 163.6 | 734.2 | 647.3 | 240.7 | 77.0 | 118.8 | 76.7 | 42.1 | 0.0 |
| lb/min CaSO3°1/2H2O | 0.0 | 0.0 | 0.0 | 0.0 | 0.0 | 0.0 | 0.0 | 146.7 | 146.7 | 0.0 | 0.0 | 215.8 | 69.1 | 227.2 | 146.7 | 80.5 | 0.0 |
| lb/min CaSO4 | 0.0 | 0.0 | 0.0 | 0.0 | 0.0 | 0.0 | 0.0 | 254.1 | 254.1 | 0.0 | 0.0 | 373.7 | 119.6 | 393.5 | 254.1 | 139.4 | 0.0 |
| lb/min CaCl2 | 0.0 | 0.0 | 0.0 | 0.0 | 0.0 | 0.0 | 0.0 | 9.8 | 9.8 | 0.0 | 0.0 | 14.3 | 4.6 | 15.1 | 9.8 | 5.4 | 0.0 |
| lb/min CaF2 | 0.0 | 0.0 | 0.0 | 0.0 | 0.0 | 0.0 | 0.0 | 1.1 | 1.1 | 0.0 | 0.0 | 1.7 | 0.5 | 1.8 | 1.1 | 0.6 | 0.0 |
| lb/min Inerts | 0.0 | 4.0 | 4.0 | 2.0 | 11.6 | 0.0 | 11.6 | 47.2 | 58.8 | 98.1 | 86.4 | 86.4 | 27.7 | 73.1 | 47.2 | 25.9 | 0.0 |
| lb/min ash/unburned fuel | 0.0 | 0.0 | 0.0 | 0.0 | 0.0 | 0.0 | 0.0 | 17.4 | 17.4 | 0.0 | 0.0 | 25.6 | 8.2 | 26.9 | 17.4 | 9.5 | 0.0 |
| lb/min Pb | 0.0 | 0.0 | 0.0 | 0.0 | 0.0 | 0.0 | 0.0 | 0.2 | 0.2 | 0.0 | 0.0 | 0.2 | 0.1 | 0.2 | 0.2 | 0.1 | 0.0 |
| lb/min Hg | 0.0 | 0.0 | 0.0 | 0.0 | 0.0 | 0.0 | 0.0 | 0.0 | 0.0 | 0.0 | 0.0 | 0.0 | 0.0 | 0.0 | 0.0 | 0.0 | 0.0 |
| lb/min subtotal solids | 0.0 | 4.0 | 4.0 | 2.0 | 98.5 | 0.0 | 98.5 | 664.5 | 763.0 | 832.3 | 733.8 | 1,122.2 | 359.2 | 1,029.1 | 664.5 | 364.6 | 0.0 |
| lb/min total | 604.3 | 1,938.1 | 1,938.1 | 969.0 | 379.5 | 0.0 | 379.5 | 1,635.5 | 2,015.0 | 3,206.2 | 2,826.7 | 2,963.5 | 948.5 | 2,532.9 | 1,635.5 | 897.4 | 0.0 |
| wt % moisture | - | | | - | - | - | - | | | - | | | | | | | |
| wt% solids | - | 0.2 | 0.2 | 0.2 | 26 | 0 | 26 | 41 | 38 | 26 | 26 | 38 | 38 | 41 | 41 | 41 | 5 |
| GPM | 72.5 | 232.4 | 232.4 | 116.2 | 38.5 | 0.0 | 38.5 | 148.5 | 187.0 | 325.0 | 286.5 | 275.0 | 88.0 | 230.0 | 148.5 | 81.5 | 0.0 |
| GPM - Design | 475.0 | 360.0 | 360.0 | 180.0 | 85.0 | 85.0 | 170.0 | 210.0 | 190.0 | 325.0 | 325.0 | 275.0 | 275.0 | 230.0 | 430.0 | 230.0 | 200.0 |
| Specific Gravity | 1.00 | 1.00 | 1.00 | 1.00 | 1.18 | 1.18 | 1.18 | 1.32 | 1.29 | 1.18 | 1.18 | 1.29 | 1.29 | 1.32 | 1.32 | 1.32 | 1.03 |
| Temperature | 60 | 60 | 88 | 88 | 120 | 120 | 120 | 94 | 99 | 120 | 120 | 99 | 99 | 94 | 94 | 94 | 60 |
| pH | Later | 4 - 10 | 4 - 10 | 4 - 10 | 12 | 12 | 12 | 10 - 12 | 10 - 12 | 12 | 12 | 10 - 12 | 10 - 12 | 10 - 12 | 10 - 12 | 10 - 12 | 10-12 |

| | S1 Total Pebble Lime (2 units) | S2.1 Unit 1 SDA Discharge | S3.1 Unit 1 FF Discharge | S4.1 Unit 1 Recycle Solids from Bin | S2.1+S3.1 Unit 1 Total Recycle Solids | S5.1 Unit 1 Total Solids Disposal | S6.1 Unit 1 Over Size Recycle Solids |
|---|---|---|---|---|---|---|---|
| Control Mode | Batch On/Off | Continious | Continious | Batch Variable | - | Continious | Batch On/Off |
| lb/min H2O | 0.0 | 2.6 | 14.8 | 7.2 | 9.8 | 7.6 | 0.4 |
| lb/min CaO (available) | 131.5 | 4.9 | 27.5 | 13.4 | 18.3 | 14.1 | 0.0 |
| lb/min CaO (unavailable) | 0.0 | 29.6 | 167.5 | 81.7 | 111.4 | 85.8 | 0.2 |
| lb/min Ca(OH)2 | 0.0 | 15.5 | 76.0 | 37.1 | 52.5 | 38.9 | 0.1 |
| lb/min CaSO3°1/2H2O | 0.0 | 36.7 | 225.4 | 110.0 | 146.7 | 115.4 | 0.3 |
| lb/min CaSO4 | 0.0 | 67.6 | 382.2 | 186.5 | 254.1 | 195.7 | 0.5 |
| lb/min CaCl2 | 0.0 | 2.3 | 15.3 | 7.5 | 9.8 | 7.8 | 0.0 |
| lb/min CaF2 | 0.0 | 0.3 | 1.7 | 0.8 | 1.1 | 0.9 | 0.0 |
| lb/min Inerts | 23.2 | 12.0 | 68.0 | 33.2 | 45.2 | 34.8 | 0.1 |
| lb/min ash/unburned fuel | 0.0 | 4.6 | 26.2 | 12.8 | 17.4 | 13.4 | 0.0 |
| lb/min Pb | 0.0 | 0.04 | 0.23 | 0.11 | 0.16 | 0.12 | 0.0 |
| lb/min Hg | 0.00E+00 | 3.36E-04 | 5.53E-04 | 2.70E-04 | 6.05E-04 | 2.83E-04 | 3.03E-06 |
| lb/min subtotal solids | 154.8 | 173.4 | 990.1 | 483.2 | 656.6 | 506.9 | 1.3 |
| lb/min total | 154.8 | 176.1 | 1,004.9 | 490.4 | 666.5 | 514.5 | 1.8 |
| Design lb/min Total | 1,000.0 | 200.0 | 1,140.0 | 800.0 | 1,000.0 | 1,140.0 | 5.0 |
| Bulk Density lb/ft3 | 55.0 | 30.0 | 30.0 | 30.0 | 30.0 | 30.0 | 60.0 |
| Temperature deg F] | 80.0 | 152.0 | 152.0 | 130.0 | - | 130.0 | 60.0 |
| wt % moisture | - | 1.5% | 1.5% | 1.5% | 1.5% | 1.5% | 25.0% |
| wt% solids | 100% | 98.5% | 98.5% | 98.5% | 98.5% | 98.5% | 75.0% |

**Data Shown is Time Averaged except for "Design" Values**



P062713.62.0200.05-C4001 0008 St:NE 08/03/00 MM-00732

CRA33213 28-OCT-2002 12:02:40



**100% MCR; COKE: PEFROMANCE; 85% FB REM; 25% of CaO in fly ash is available**
**30 Deg F Approach Temperature**

| | LS1 H2O to Mill | LS2 H2O to Vent Scrubber | LS3 Mill Recycle Pump Discharge | LS4 Mill OverFlow | LS5 Vent Scrubber Drain | LS6 Mill Seperator Tank discharge | LS7 Lime Slurry Transfer Pump Out | LS8.1 Lime Slurry to Unit 1 Lime Slurry Storage Tank | LS8.2 Lime Slurry to Unit 2 Lime Slurry Storage Tank | LS9 Lime Slurry Transfer Pump Return |
|---|---|---|---|---|---|---|---|---|---|---|
| Control Mode | Batch | Batch | Batch | Batch | Batch | Batch | Continious | Batch | Batch | Batch |
| lb/min H2O | 603.0 | 1.2 | 10,957 | 11,519 | 1.2 | 562.0 | 4,383 | 281.0 | 281.0 | 3,820.6 |
| lb/min CaO (available) | | | 0 | 0 | | 0.0 | 0 | 0.0 | 0.0 | 0.0 |
| lb/min CaO (unavailable) | | | 0 | 0 | | 0.0 | 0 | 0.0 | 0.0 | 0.0 |
| lb/min Ca(OH)2 | | | 3,389 | 3,563 | | 173.8 | 1,355 | 86.9 | 86.9 | 1,181.7 |
| lb/min CaSO3°1/2H2O | | | 0 | 0 | | 0.0 | 0 | 0.0 | 0.0 | 0.0 |
| lb/min CaSO4 | | | 0 | 0 | | 0.0 | 0 | 0.0 | 0.0 | 0.0 |
| lb/min CaCl2 | | | 0 | 0 | | 0.0 | 0 | 0.0 | 0.0 | 0.0 |
| lb/min CaF2 | | | 0 | 0 | | 0.0 | 0 | 0.0 | 0.0 | 0.0 |
| lb/min Inerts | | | 453 | 476 | | 23.2 | 181 | 11.6 | 11.6 | 157.8 |
| lb/min ash/unburned fuel | | | 0 | 0 | | 0.0 | 0 | 0.0 | 0.0 | 0.0 |
| lb/min Pb | | | 0 | 0 | | 0.0 | 0 | 0.0 | 0.0 | 0.0 |
| lb/min Hg | | | 0 | 0 | | 0.0 | 0 | 0.0 | 0.0 | 0.0 |
| lb/min subtotal solids | 0.0 | 0.0 | 3,841 | 4,038 | 0.0 | 197.0 | 1,536.5 | 98.5 | 98.5 | 1,339.5 |
| lb/min total | 603.0 | 1.0 | 14,798 | 15,557 | 1.2 | 759.1 | 5,919.2 | 379.5 | 379.5 | 5,160.1 |
| wt % moisture | - | - | - | - | - | - | - | - | - | - |
| wt% solids | - | - | 26% | 26% | - | 26% | 26% | 26% | 26% | 26% |
| GPM | 72.4 | 0.2 | 1500 | 1576.9 | 0.2 | 76.9 | 600.0 | 38.5 | 38.5 | 523.1 |
| GPM - Design | 475.0 | 1.0 | 1500 | 2000.0 | 1.0 | 500.0 | 600.0 | 600.0 | 600.0 | 600.0 |
| Specific Gravity | 1.00 | 1.00 | 1.18 | 1.18 | 1.00 | 1.18 | 1.18 | 1.18 | 1.18 | 1.18 |
| Temperature | 60 | 60 | 160 | 160 | 60 | 160 | 140 | 140 | 140 | 140 |
| pH | Later | Later | 12.5 | 12.5 | Later | 12.5 | 12.5 | 12.5 | 12.5 | 12.5 |

| | | CW1 Air Compressor Glycol/Air Cooler Inlet | CW2 Air Compressor After Cooler Glycol Inlet | CW3 Air Compressor Inter Cooler Glycol Inlet | CW4 Glycol/Water Circulating Pump Inlet | CW5 Glycol/Water Circulating Pump Outlet |
|---|---|---|---|---|---|---|
| lb/min H2O | H2O | 4,118 | 1,078 | 3,041 | 4,118 | 4,118 |
| lb/min CaO (available) | (CH2)2(OH)2 | 1,030 | 269 | 760 | 1,030 | 1,030 |
| Control Mode | | Continious | Continious | Continious | Continious | Continious |
| GPM | | 600 | 157 | 443 | 600 | 600 |
| GPM - Design | | 600 | 200 | 500 | 600 | 600 |
| Specific Gravity | | 1.03 | 1.03 | 1.03 | 1.03 | 1.03 |
| Temperature | | 112 | 104 | 104 | 123 | 123 |
| pH | | - | - | - | - | |

| | CA1 Total Compressor Output | F3 Total Atomizing Air | IA1 Compressed Air to Air Dryer | IA2.1 Pulse Air to Unit 1 | IA3 Instrument Air |
|---|---|---|---|---|---|
| Control Mode | Continious Variable | On/Off | Continious Variable | Continious Variable | Continious Variable |
| lb/min O2 | 151.1 | 138.0 | 13.0 | 6.2 | 0.8 |
| lb/min N2 | 435.2 | 397.6 | 37.6 | 17.8 | 2.2 |
| lb/min H2O | 0.3 | 3.0 | 0.0 | 0.0 | 0.0 |
| lb/min subtotal | 586.6 | 538.7 | 50.6 | 24.0 | 3.0 |
| SCFM | 7,880 | 7,200 | 680 | 320 | 40 |
| SCFM -Design | 9,000 | 7,200 | 900 | 430 | 40 |
| vol % O2 | 23.09 | 23.09 | 23.09 | 23.30 | 23.30 |
| vol % N2 | 76.01 | 76.01 | 76.01 | 76.70 | 76.70 |
| vol % H2O | 0.09 | 0.09 | 0.09 | 0.00 | 0.00 |
| Tdb deg F | 120 | 120 | 120 | 120 | 120 |
| Twb deg F | 120 | 120 | 120 | | |
| Tdp deg F | 120 | 120 | 120 | -30 | -30 |
| PSIG | 110 | 110 | 100 | 80 | 80 |

**Data Shown is Time Averaged except for "Design" Values**



P062713.62.0200.05-C4001 0009 St:NE 08/03/00 MM-00732

CRA33213 28-OCT-2002 12:01:10

**Foster Wheeler USA Corporation** — **WAPC Contract 3847**
**JEA Northside Units 1&2 Repowering Project** — **June 2, 2000**
**100% MCR; COAL: PEFROMANCE; 85% FB REM; 25% of CaO in fly ash is available** — **Rev #3**
**30 Deg F Approach Temperature**

| | F1.1 Unit 1 SDA Inlet | F2.1 Unit 1 SDA Inleak | F3.1 Unit 1 SDA Atom Air | F4.1 Unit 1 SDA Out | F5.1 Unit 1 FF Inleak | F6.1 Unit 1 FF Out | F7.1 Unit 1 Fluidizing Blower/ Heater Out | F8.1 Unit 1 Recycle Bin Fluidizing Air | F9.1 Unit 1 FF Fluidizing Air | 10.1 Not Used | F10.1 Not Used | F11.1 Slaker A or B Lime Conveying Air | F12.1 Lime Silo Vent Discharge | FA1 Slaker A or B Mill Vent Scrubber Fresh Air Inlet | FA2 Slaker A or B Mill Vent Scrubber Exhaust |
|---|---|---|---|---|---|---|---|---|---|---|---|---|---|---|---|
| lb/min CO2 | 8,956.0 | 0.0 | 0.0 | 8,956.0 | 0.0 | 8,956.0 | | | | | | | | | |
| lb/min O2 | 1,506.0 | 92.5 | 69.0 | 1,667.5 | 199.7 | 1,867.3 | 4.3 | 2.2 | 2.2 | | | 13.4 | 13.4 | 16.8 | 17.2 |
| lb/min N2 | 30,002.6 | 303.9 | 198.8 | 30,505.3 | 656.0 | 31,161.3 | 14.2 | 7.1 | 7.1 | | | 38.4 | 38.4 | 63.1 | 65.0 |
| lb/min H2O | 2,407.0 | 7.9 | 1.5 | 3,654.7 | 17.1 | 3,671.8 | 0.4 | 0.2 | 0.2 | | | 6.3 | 6.3 | 2.6 | 7.1 |
| lb/min SO2 | 34.17 | | | 10.68 | | 6.66 | | | | | | | | | |
| lb/min HCl | 15.37 | | | 2.88 | | 1.44 | | | | | | | | | |
| lb/min HF | 0.47 | | | 0.01 | | 0.01 | | | | | | | | | |
| lb/min SO3 | 0.82 | | | 0.82 | | 0.02 | | | | | | | | | |
| lb/min NOx | 4.00 | | | 4.00 | | 4.00 | | | | | | | | | |
| lb/min CO | 5.77 | | | 5.77 | | 5.77 | | | | | | | | | |
| lb/min VOC | 0.22 | | | 0.22 | | 0.22 | | | | | | | | | |
| lb/min NH3 | 0.37 | | | 0.37 | | 0.37 | | | | | | | | | |
| lb/min subtotal fluegas | 42,932.8 | 404.4 | 269.3 | 44,808.3 | 872.8 | 45,674.9 | 18.9 | 9.4 | 9.4 | | | 58.1 | 58.1 | 74.0 | 74.0 |
| lb/min CaO (available) | 23.8 | | | 20.2 | | 0.0 | | | | | | | | | |
| lb/min CaO (unavailable) | 63.1 | | | 154.7 | | 0.1 | | | | | | | | | |
| lb/min Ca(OH)2 | 0.0 | | | 24.6 | | 0.0 | | | | | | | | | |
| lb/min CaSO3°1/2H2O | | | | 129.7 | | 0.1 | | | | | | | | | |
| lb/min CaSO4 | 108.0 | | | 264.8 | | 0.2 | | | | | | | | | |
| Lb/min CaCl2 | 0.0 | | | 50.7 | | 0.0 | | | | | | | | | |
| lb/min CaF2 | 0.0 | | | 2.2 | | 0.0 | | | | | | | | | |
| lb/min Inerts | 14.1 | | | 50.6 | | 0.0 | | | | | | | | | |
| lb/min ash/unburned fuel | 134.0 | | | 328.8 | | 0.0 | | | | | | | | | |
| lb/min Pb | 0.12 | | | 0.10 | | 0.00 | | | | | | | | | |
| lb/min Hg | 7.55E-04 | | | 7.55E-04 | | 4.66E-04 | | | | | | | | | |
| lb/min subtotal solids | 343.0 | 0.0 | 0.0 | 1026.6 | 0.0 | 0.5 | | | | | | | 0.0005 | | 0.0007 |
| lb/min total | 43275.8 | 407.3 | 266.6 | 45834.9 | 879.2 | 45664.1 | 18.9 | 9.4 | 9.4 | | | 58.1 | 58.1 | 74.0 | 74.0 |
| SCFM | 561,609 | 5,479 | 3,600 | 596,329 | 11,825 | 608,247 | 256 | 128 | 128 | | | 782 | 782 | 995 | 1,075 |
| SDCFM | 510,073 | 5,383 | 3,523 | 518,675 | 11,621 | 530,384 | 248 | 124 | 124 | | | 768 | 768 | 965 | 989 |
| ACFM | 825,946 | 5,605 | 612 | 734,548 | 12,098 | 763,116 | 219 | 110 | 110 | | | 781 | 800 | 1,020 | 1,181 |
| ACFM - Design | 879,280 | | 612 | 780,600 | | 810,000 | 274 | 137 | 137 | | | 800 | 800 | 1,185 | 1,185 |
| vol % CO2 | 14.0 | 0.0 | 0.0 | 13.2 | 0.0 | 12.9 | 0.0 | 0.0 | 0.0 | | | 0.0 | 0.0 | 0.0 | 0.0 |
| vol % O2 | 3.2 | 20.3 | 23.1 | 3.4 | 20.3 | 3.7 | 20.3 | 20.3 | 20.3 | | | 20.3 | 20.3 | 20.3 | 19.2 |
| vol % N2 | 73.6 | 76.4 | 76.0 | 70.5 | 76.4 | 70.6 | 76.4 | 76.4 | 76.4 | | | 76.4 | 76.4 | 76.4 | 72.8 |
| vol % H2O | 9.2 | 3.1 | 0.9 | 13.0 | 3.1 | 12.8 | 3.1 | 3.1 | 3.1 | | | 3.1 | 3.1 | 3.1 | 8.0 |
| ppm (v-wgb) SO2 | 366 | | | 108 | | 66 | | | | | | | | | |
| lb/MM Btu SO2 | 0.77 | | | 0.24 | | 0.15 | | | | | | | | | |
| ppm (v-wgb) HCl | 122 | | | 51 | | 25 | | | | | | | | | |
| lb/MM Btu HF | 0.0106 | | | 0.0002 | | 1.57E-04 | | | | | | | | | |
| lb/MM Btu SO3 | 0.018 | | | 0.018 | | 4.00E-04 | | | | | | | | | |
| ppm (v-wgb) NOx (as NO2) | 60 | | | 56 | | 55 | | | | | | | | | |
| ppm (v-wgb) CO | 141 | | | 133 | | 130 | | | | | | | | | |
| ppm (v-wgb) VOC as CH4 | 9 | | | 9 | | 9 | | | | | | | | | |
| ppm (v-wgb) NH3 | 15 | | | 14 | | 14 | | | | | | | | | |
| lb/ MM Btu Solid Particulate | 7.726 | | | 23.121 | | 0.011 | | | | | | | | | |
| gr/acf Solid Particulate | 2.889 | | | 9.783 | | 0.003 | | | | | | | 0.0048 | | 0.0042 |
| lb/MM Btu Pb | 2.8E-03 | | | 2.4E-03 | | 2.60E-05 | | | | | | | | | |
| lb/MM Btu Hg | 1.7E-05 | | | 1.7E-05 | | 1.05E-05 | | | | | | | | | |
| Tdb deg F | 280 | 80 | 120 | 155 | 80 | 153 | 300 | 300 | 300 | | | 80 | 80 | 80 | 120 |
| Twb deg F | 127 | 78 | 120 | 122 | 78 | 125 | | | | | | 78 | 78 | 78 | 109 |
| Tdp deg F | 110 | 76 | 120 | 123 | 76 | 122 | | | | | | 76 | 76 | 76 | 107 |
| Pa (in Hg) | 28.51 | 29.91 | 253.81 | 28.29 | 29.91 | 27.70 | 50.27 | 50.27 | 50.27 | | | 30.65 | 29.91 | 29.84 | 29.91 |
| Ps in. wg {psig} | -19.00 | 0.00 | {110} | -22.00 | 0.00 | -30.00 | {10} | {10} | {10} | | | 10.00 | 0.00 | -1.00 | 0.00 |



P062713.62.0200.05-C4001 0025 St:NE 08/03/00 MM-00732

**100% MCR; COAL: PEFROMANCE; 85% FB REM; 25% of CaO in fly ash is available**
**30 Deg F Approach Temperature**

| | L1 Slaker A or B H2O (2 units) | L2 Total Dilution (Recycle) H2O | L3 Total Heated Dilution (Recycle) H2O | L3.1 Unit 1 Dilution H2O (Recycle H2O) to Mix Tank | L4.1 Unit 1 Lime Slurry to SDA | L5.1 Unit 1 Lime Slurry to Recycle Tank | L4.1+L5.1 Unit 1 Total Lime Slurry Feed | L6.1 Unit 1 Recycle Slurry Feed | L7.1 Unit 1 SDA Feed | L8.1 Unit 1 Lime Slurry Feed Pump Outlet | L9.1 Unit 1 Lime Slurry Feed Pump Return | L10.1 Unit 1 Feed Slurry Transfer Pump Outlet | L11.1 Unit 1 Feed Slurry Transfer Pump Return | L12.1 Unit 1 Recycle Transfer Pump Outlet | L13.1 Unit 1 Recycle Slurry Seperator Feed | L14.1 Unit 1 Recycle Transfer Pump Return | L15.1 From Local Sumps |
|---|---|---|---|---|---|---|---|---|---|---|---|---|---|---|---|---|---|
| Control Mode | On/Off | Batch Varaible | Batch Varaible | Batch Varaible | Batch Varaible | Batch Varaible | - | Continious Variable | Continious Variable | Continious | Continious | Continious | Continious | Batch On/Off | Batch On/Off | Batch On/Off | Batch On/Off |
| lb/min H2O | 237.6 | 2,241.8 | 2,241.8 | 1,120.9 | 110.5 | 0.0 | 110.5 | 1,127.8 | 1,238.3 | 2,373.9 | 2,263.5 | 1,802.3 | 564.1 | 1,492.4 | 1,127.8 | 364.6 | 0.0 |
| lb/min CaO (available) | 0.0 | 0.0 | 0.0 | 0.0 | 0.0 | 0.0 | 0.0 | 0.0 | 0.0 | 0.0 | 0.0 | 0.0 | 0.0 | 0.0 | 0.0 | 0.0 | 0.0 |
| lb/min CaO (unavailable) | 0.0 | 0.0 | 0.0 | 0.0 | 0.0 | 0.0 | 0.0 | 118.9 | 118.9 | 0.0 | 0.0 | 173.1 | 54.2 | 157.4 | 118.9 | 38.4 | 0.0 |
| lb/min Ca(OH)2 | 0.0 | 0.0 | 0.0 | 0.0 | 34.2 | 0.0 | 34.2 | 35.4 | 69.6 | 734.2 | 700.1 | 101.3 | 31.7 | 46.9 | 35.4 | 11.4 | 0.0 |
| lb/min CaSO3°1/2H2O | 0.0 | 0.0 | 0.0 | 0.0 | 0.0 | 0.0 | 0.0 | 105.3 | 105.3 | 0.0 | 0.0 | 153.2 | 48.0 | 139.3 | 105.3 | 34.0 | 0.0 |
| lb/min CaSO4 | 0.0 | 0.0 | 0.0 | 0.0 | 0.0 | 0.0 | 0.0 | 203.6 | 203.6 | 0.0 | 0.0 | 296.3 | 92.7 | 269.4 | 203.6 | 65.8 | 0.0 |
| lb/min CaCl2 | 0.0 | 0.0 | 0.0 | 0.0 | 0.0 | 0.0 | 0.0 | 40.3 | 40.3 | 0.0 | 0.0 | 58.7 | 18.4 | 53.3 | 40.3 | 13.0 | 0.0 |
| lb/min CaF2 | 0.0 | 0.0 | 0.0 | 0.0 | 0.0 | 0.0 | 0.0 | 1.7 | 1.7 | 0.0 | 0.0 | 2.5 | 0.8 | 2.2 | 1.7 | 0.5 | 0.0 |
| lb/min Inerts | 0.0 | 4.0 | 4.0 | 2.0 | 4.6 | 0.0 | 4.6 | 40.9 | 45.5 | 98.1 | 93.5 | 66.2 | 20.7 | 54.1 | 40.9 | 13.2 | 0.0 |
| lb/min ash/unburned fuel | 0.0 | 0.0 | 0.0 | 0.0 | 0.0 | 0.0 | 0.0 | 252.8 | 252.8 | 0.0 | 0.0 | 368.0 | 115.2 | 334.6 | 252.8 | 81.7 | 0.0 |
| lb/min Pb | 0.0 | 0.0 | 0.0 | 0.0 | 0.0 | 0.0 | 0.0 | 0.2 | 0.2 | 0.0 | 0.0 | 0.3 | 0.1 | 0.3 | 0.2 | 0.1 | 0.0 |
| lb/min Hg | 0.0 | 0.0 | 0.0 | 0.0 | 0.0 | 0.0 | 0.0 | 0.0 | 0.0 | 0.0 | 0.0 | 0.0 | 0.0 | 0.0 | 0.0 | 0.0 | 0.0 |
| lb/min subtotal solids | 0.0 | 4.0 | 4.0 | 2.0 | 38.7 | 0.0 | 38.7 | 799.1 | 837.9 | 832.3 | 793.5 | 1,219.6 | 381.7 | 1,057.5 | 799.1 | 258.4 | 0.0 |
| lb/min total | 237.6 | 2,245.8 | 2,245.8 | 1,122.9 | 149.2 | 0.0 | 149.2 | 1,926.9 | 2,076.2 | 3,206.2 | 3,057.0 | 3,021.9 | 945.7 | 2,549.9 | 1,926.9 | 623.0 | 0.0 |
| wt % moisture | - | | | - | - | - | - | | | - | | | | | | | |
| wt% solids | - | 0.2 | 0.2 | 0.2 | 26 | 0 | 26 | 41 | 40 | 26 | 26 | 40 | 40 | 41 | 41 | 41 | 5 |
| GPM | 28.5 | 269.3 | 269.3 | 134.7 | 15.1 | 0.0 | 15.1 | 173.8 | 188.9 | 325.0 | 309.9 | 275.0 | 86.1 | 230.0 | 173.8 | 56.2 | 0.0 |
| GPM - Design | 475.0 | 360.0 | 360.0 | 180.0 | 85.0 | 85.0 | 170.0 | 210.0 | 190.0 | 325.0 | 325.0 | 275.0 | 275.0 | 230.0 | 430.0 | 230.0 | 200.0 |
| Specific Gravity | 1.00 | 1.00 | 1.00 | 1.00 | 1.18 | 1.18 | 1.18 | 1.33 | 1.32 | 1.18 | 1.18 | 1.32 | 1.32 | 1.33 | 1.33 | 1.33 | 1.03 |
| Temperature | 60 | 60 | 86 | 86 | 120 | 120 | 120 | 91 | 93 | 120 | 120 | 93 | 93 | 91 | 91 | 91 | 60 |
| pH | Later | 4 - 10 | 4 - 10 | 4 - 10 | 12 | 12 | 12 | 10 - 12 | 10 - 12 | 12 | 12 | 10 - 12 | 10 - 12 | 10 - 12 | 10 - 12 | 10 - 12 | 10-12 |

| | S1 Total Pebble Lime (2 units) | S2.1 Unit 1 SDA Discharge | S3.1 Unit 1 FF Discharge | S4.1 Unit 1 Recycle Solids from Bin | S2.1+S3.1 Unit 1 Total Recycle Solids | S5.1 Unit 1 Total Solids Disposal | S6.1 Unit 1 Over Size Recycle Solids |
|---|---|---|---|---|---|---|---|
| Control Mode | Batch On/Off | Continious | Continious | Batch Variable | - | Continious | Batch On/Off |
| lb/min H2O | 0.0 | 2.7 | 15.5 | 9.2 | 11.9 | 6.3 | 0.5 |
| lb/min CaO (available) | 51.7 | 3.6 | 20.2 | 12.0 | 15.6 | 8.2 | 0.0 |
| lb/min CaO (unavailable) | 0.0 | 27.3 | 154.6 | 91.6 | 118.9 | 63.0 | 0.2 |
| lb/min Ca(OH)2 | 0.0 | 4.3 | 17.7 | 10.5 | 14.8 | 7.2 | 0.0 |
| lb/min CaSO3°1/2H2O | 0.0 | 22.9 | 139.0 | 82.4 | 105.3 | 56.7 | 0.2 |
| lb/min CaSO4 | 0.0 | 46.8 | 264.6 | 156.7 | 203.6 | 107.8 | 0.4 |
| lb/min CaCl2 | 0.0 | 8.9 | 52.9 | 31.4 | 40.3 | 21.6 | 0.1 |
| lb/min CaF2 | 0.0 | 0.4 | 2.2 | 1.3 | 1.7 | 0.9 | 0.0 |
| lb/min Inerts | 9.1 | 8.9 | 50.6 | 30.0 | 38.9 | 20.6 | 0.1 |
| lb/min ash/unburned fuel | 0.0 | 58.0 | 328.8 | 194.8 | 252.8 | 134.0 | 0.5 |
| lb/min Pb | 0.0 | 0.05 | 0.30 | 0.18 | 0.23 | 0.12 | 0.0 |
| lb/min Hg | 0.00E+00 | 4.09E-04 | 7.08E-04 | 4.20E-04 | 8.29E-04 | 2.89E-04 | 4.14E-06 |
| lb/min subtotal solids | 60.8 | 181.3 | 1,030.9 | 610.8 | 792.1 | 420.1 | 1.6 |
| lb/min total | 60.8 | 184.0 | 1,046.4 | 620.0 | 804.0 | 426.4 | 2.1 |
| Design lb/min Total | 1,000.0 | 200.0 | 1,140.0 | 800.0 | 1,000.0 | 1,140.0 | 5.0 |
| Bulk Density lb/ft3 | 55.0 | 30.0 | 30.0 | 30.0 | 30.0 | 30.0 | 60.0 |
| Temperature deg F] | 80.0 | 155.0 | 155.0 | 130.0 | - | 130.0 | 60.0 |
| wt % moisture | - | 1.5% | 1.5% | 1.5% | 1.5% | 1.5% | 25.0% |
| wt% solids | 100% | 98.5% | 98.5% | 98.5% | 98.5% | 98.5% | 75.0% |

**Data Shown is Time Averaged except for "Design" Values**



CRA33213 28-OCT-2002 12:00:01

P062713.62.0200.05-C4001 0026 St:NE 08/03/00 MM-00732

CRA33213 28-OCT-2002 11:59:34

**Foster Wheeler USA Corporation**
**JEA Northside Units 1&2 Repowering Project**

**WAPC Contract 3847**
**June 2, 2000**
**Rev #3**

**100% MCR; COAL: PEFROMANCE; 85% FB REM; 25% of CaO in fly ash is available**
**30 Deg F Approach Temperature**

| | LS1 H2O to Mill | LS2 H2O to Vent Scrubber | LS3 Mill Recycle Pump Discharge | LS4 Mill OverFlow | LS5 Vent Scrubber Drain | LS6 Mill Seperator Tank discharge | LS7 Lime Slurry Transfer Pump Out | LS8.1 Lime Slurry to Unit 1 Lime Slurry Storage Tank | LS8.2 Lime Slurry to Unit 2 Lime Slurry Storage Tank | LS9 Lime Slurry Transfer Pump Return |
|---|---|---|---|---|---|---|---|---|---|---|
| Control Mode | Batch | Batch | Batch | Batch | Batch | Batch | Continious | Batch | Batch | Batch |
| lb/min H2O | 236.3 | 1.2 | 10,957 | 11,178 | 1.2 | 221.0 | 4,383 | 110.5 | 110.5 | 4,161.7 |
| lb/min CaO (available) | | | 0 | 0 | | 0.0 | 0 | 0.0 | 0.0 | 0.0 |
| lb/min CaO (unavailable) | | | 0 | 0 | | 0.0 | 0 | 0.0 | 0.0 | 0.0 |
| lb/min Ca(OH)2 | | | 3,389 | 3,457 | | 68.3 | 1,355 | 34.2 | 34.2 | 1,287.1 |
| lb/min CaSO3°1/2H2O | | | 0 | 0 | | 0.0 | 0 | 0.0 | 0.0 | 0.0 |
| lb/min CaSO4 | | | 0 | 0 | | 0.0 | 0 | 0.0 | 0.0 | 0.0 |
| lb/min CaCl2 | | | 0 | 0 | | 0.0 | 0 | 0.0 | 0.0 | 0.0 |
| lb/min CaF2 | | | 0 | 0 | | 0.0 | 0 | 0.0 | 0.0 | 0.0 |
| lb/min Inerts | | | 453 | 462 | | 9.1 | 181 | 4.6 | 4.6 | 171.9 |
| lb/min ash/unburned fuel | | | 0 | 0 | | 0.0 | 0 | 0.0 | 0.0 | 0.0 |
| lb/min Pb | | | 0 | 0 | | 0.0 | 0 | 0.0 | 0.0 | 0.0 |
| lb/min Hg | | | 0 | 0 | | 0.0 | 0 | 0.0 | 0.0 | 0.0 |
| lb/min subtotal solids | 0.0 | 0.0 | 3,841 | 3,919 | 0.0 | 77.5 | 1,536.5 | 38.7 | 38.7 | 1,459.0 |
| lb/min total | 236.3 | 1.0 | 14,798 | 15,096 | 1.2 | 298.4 | 5,919.2 | 149.2 | 149.2 | 5,620.7 |
| wt % moisture | - | - | - | - | - | - | - | - | - | - |
| wt% solids | - | - | 26% | 26% | - | 26% | 26% | 26% | 26% | 26% |
| GPM | 28.4 | 0.2 | 1500 | 1530.3 | 0.2 | 30.3 | 600.0 | 15.1 | 15.1 | 569.7 |
| GPM - Design | 475.0 | 1.0 | 1500 | 2000.0 | 1.0 | 500.0 | 600.0 | 600.0 | 600.0 | 600.0 |
| Specific Gravity | 1.00 | 1.00 | 1.18 | 1.18 | 1.00 | 1.18 | 1.18 | 1.18 | 1.18 | 1.18 |
| Temperature | 60 | 60 | 160 | 160 | 60 | 160 | 140 | 140 | 140 | 140 |
| pH | Later | Later | 12.5 | 12.5 | Later | 12.5 | 12.5 | 12.5 | 12.5 | 12.5 |

| | | CW1 Air Compressor Glycol/Air Cooler Inlet | CW2 Air Compressor After Cooler Glycol Inlet | CW3 Air Compressor Inter Cooler Glycol Inlet | CW4 Glycol/Water Circulating Pump Inlet | CW5 Glycol/Water Circulating Pump Outlet |
|---|---|---|---|---|---|---|
| Control Mode | | Continious | Continious | Continious | Continious | Continious |
| lb/min H2O | H2O | 4,118 | 1,078 | 3,041 | 4,118 | 4,118 |
| lb/min CaO (available) | (CH2)2(OH)2 | 1,030 | 269 | 760 | 1,030 | 1,030 |
| lb/min CaO (unavailable) | | | | | | |
| lb/min Ca(OH)2 | | | | | | |
| lb/min CaSO3°1/2H2O | | | | | | |
| lb/min CaSO4 | | | | | | |
| lb/min CaCl2 | | | | | | |
| lb/min CaF2 | | | | | | |
| lb/min Inerts | | | | | | |
| lb/min ash/unburned fuel | | | | | | |
| lb/min Pb | | | | | | |
| lb/min Hg | | | | | | |
| lb/min subtotal solids | | | | | | |
| lb/min total | | 5,148 | 1,347 | 3,801 | 5,148 | 5,148 |
| wt % moisture | | | | | | |
| wt% solids | | | | | | |
| GPM | | 600 | 157 | 443 | 600 | 600 |
| GPM - Design | | 600 | 200 | 500 | 600 | 600 |
| Specific Gravity | | 1.03 | 1.03 | 1.03 | 1.03 | 1.03 |
| Temperature | | 111 | 104 | 104 | 123 | 123 |
| pH | | - | - | - | - | |

| | CA1 Total Compressor Output | F3 Total Atomizing Air | IA1 Compressed Air to Air Dryer | IA2.1 Pulse Air to Unit 1 | IA3 Instrument Air |
|---|---|---|---|---|---|
| Control Mode | Continious Variable | On/Off | Continious Variable | Continious Variable | Continious Variable |
| lb/min O2 | 151.1 | 138.0 | 13.0 | 6.2 | 0.8 |
| lb/min N2 | 435.2 | 397.6 | 37.6 | 17.8 | 2.2 |
| lb/min H2O | 0.3 | 3.0 | 0.0 | 0.0 | 0.0 |
| lb/min subtotal | 586.6 | 538.7 | 50.6 | 24.0 | 3.0 |
| SCFM | 7,880 | 7,200 | 680 | 320 | 40 |
| SCFM -Design | 9,000 | 7,200 | 900 | 430 | 40 |
| vol % O2 | 23.09 | 23.09 | 23.09 | 23.30 | 23.30 |
| vol % N2 | 76.01 | 76.01 | 76.01 | 76.70 | 76.70 |
| vol % H2O | 0.09 | 0.09 | 0.09 | 0.00 | 0.00 |
| Tdb deg F | 120 | 120 | 120 | 120 | 120 |
| Twb deg F | 120 | 120 | 120 | | |
| Tdp deg F | 120 | 120 | 120 | -30 | -30 |
| PSIG | 110 | 110 | 100 | 80 | 80 |

**Data Shown is Time Averaged except for "Design" Values**



P062713.62.0200.05-C4001 0027 St:NE 08/03/00 MM-00732

CRA33213 11-SEP-2002 14:08:59

# UNITED CONVEYOR CORPORATION
# CONTRACT PROCESS AND INSTRUMENTATION DIAGRAMS

## GENERAL NOTES

THESE ARE SCHEMATIC DIAGRAMS ONLY AND ARE NOT MEANT TO BE PHYSICAL INSTALLATION DRAWINGS. FOR ACTUAL EQUIPMENT ARRANGEMENT AND LOCATION OF CONNECTIONS, SEE DESIGN DRAWINGS IN THE REFERENCE LIST.

| UNIT/BOILER INFORMATION | UNIT 1 | UNIT 2 |
|---|---|---|
| UNIT NUMBER(S) | | |
| BOILER MANUFACTURER | | |
| FIRING METHOD (PC, STOKER, ETC.) | | |
| TYPE (BALANCED DRAFT, ETC.) | | |
| SIZE (STEAM FLOW) | | |
| FURNACE PRESSURE | | |
| FIRING RATE AT FULL LOAD (MAX. CONT. RATING) | | |
| FUEL DESCRIPTION FUEL SOURCE/TYPE, ETC. | | |
| TURBINE MANUFACTURER | | |
| SIZE | | |

FOSTER WHEELER TO PROVIDE UNITS 1 & 2 BOILER INFORMATION

### MATERIAL SUPPLY

ONLY MATERIAL MARKED WITH ONE OF THE FOLLOWING SYMBOLS IS FURNISHED BY UCC:

- (oval) MATERIAL FURNISHED BY UCC AS COVERED BY THIS DRAWING. NUMBER IN OVAL REFERS TO ITEM NUMBER ON THE BILL OF MATERIAL.
- (C) MATERIAL FURNISHED BY UCC AS PART OF A CONVEYOR PIPING DRAWING (DRAWING SERIES PREFIX ___ 10)
- (P) MATERIAL FURNISHED BY UCC AS PART OF A SERVICE PIPING DRAWING (DRAWING SERIES PREFIX ___ 11)
- (E) MATERIAL FURNISHED BY UCC AS PART OF AN ELECTRICAL DRAWING (DRAWING SERIES PREFIX ___ 35)
- (M) MATERIAL FURNISHED BY UCC AS PART OF A P & ID OR CONTRACT ASSEMBLY DRAWING (DRAWING SERIES PREFIX ___ 14, ___ 32)
- (S) MATERIAL FURNISHED BY UCC AS PART OF A STRUCTURAL DRAWING (DRAWING SERIES PREFIX ___ 23, ___ 25, ___ 27, ___ 28, ___ 29, AND ___ 30)

MATERIAL FURNISHED ON CONTRACT DRAWING WILL BE IDENTIFIED BY THE SUBSYSTEM, DRAWING LETTER IDENTIFICATION AND SEQUENTIAL ITEM NUMBER AS LISTED ON BILL OF MATERIAL OR EQUIPMENT LIST, i.e.

P FL - 3

SUBSYSTEM — DRAWING LETTER IDENTIFICATION — SEQUENCE NUMBER ON BILL OF MATERIAL

[C] FOR LIST OF UCC SUPPLIED STARTUP AND CONSUMABLE SPARE PARTS REFERANCE BILL OF MATERIAL 014-55700-3

### EXISTING EQUIPMENT

'EIP' DENOTES EXISTING IN PLACE
'ER' DENOTES EQUIPMENT RELOCATED

THE SOUND PRESSURE LEVEL OF EQUIPMENT SUPPLIED BY UCC WAS DETERMINED ON A TEST STAND OR AT AN ACTUAL INSTALLATION AND CORRECTED FOR BACKGROUND NOISE. VALUES QUOTED AS MEETING CONTRACT SPECIFICATIONS DO NOT IMPLY A GUARANTEED INSTALLED SOUND PRESSURE LEVEL DUE TO MANY VARIABLES OF WHICH UCC HAS NO KNOWLEDGE AND OVER WHICH UCC HAS NO CONTROL. SOUND PRESSURE LEVELS ARE DEPENDENT ON THE AMBIENT CONDITIONS SUCH AS THE DISTANCE OF THE EQUIPMENT FROM ADJACENT WALLS, NOISE REFLECTIVE PROPERTIES OF MATERIAL IN THE VICINITY OF THE EQUIPMENT, BACKGROUND NOISE, ETC.

### OPERATING NOTES

ALL RELIEF VALVES, REGULATORS, PRESSURE, FLOW, AND TEMPERATURE SWITCHES, ETC., SHOULD BE SET FOR THE VALUES CALLED FOR ON THE P&IDS AND SHOULD ONLY BE CHANGED BY QUALIFIED PERSONNEL.

ADEQUATE COMPRESSED AIR PRESSURE AND FLOW, AS CALLED FOR ON THE DESIGN DRAWINGS, MUST BE AVAILABLE BEFORE PLACING THE SYSTEM IN OPERATION.

ALL MANUALLY OPERATED GATES MUST BE POSITIONED, AS CALLED FOR ON THE DESIGN DRAWINGS OR IN THE OPERATING INSTRUCTIONS, BEFORE PLACING THE SYSTEM IN OPERATION.

VALVES HAVE BEEN TAGGED IN SEQUENTIAL ORDER. SOLENOID AIR VALVES AND LIMIT SWITCHES HAVE BEEN TAGGED IN ACCORDANCE WITH THE ASSOCIATED VALVE. IN THE CASE OF OPEN AND CLOSED LIMIT SWITCHES, THE LOWER NUMBER REPRESENTS THE OPEN POSITION AND THE HIGHER NUMBER REPRESENTS THE CLOSED POSITION.

REVIEW ALL DRAWINGS TO BECOME FAMILIAR WITH THE OPERATION OF THE EQUIPMENT AND SYSTEMS AND READ AND UNDERSTAND ALL SAFETY, EQUIPMENT, AND OPERATING INSTRUCTIONS BEFORE ATTEMPTING TO OPERATE ANY OF THE EQUIPMENT OR SYSTEMS.

## COMPRESSED AIR NOTES

THE QUALITY REQUIREMENTS FOR COMPRESSED AIR ARE DEPENDENT ON IT'S USAGE, INDIVIDUAL EQUIPMENT REQUIREMENTS, AND THE EQUIPMENT'S LOCATION.

CLEAN, DRY COMPRESSED INSTRUMENT AIR

THE REQUIREMENTS FOR CLEAN, DRY COMPRESSED INSTRUMENT AIR ARE AS FOLLOWS:

- 0-1 PPM OIL OR HYDROCARBON BY WEIGHT OR VOLUME
- 3 MICRON MAXIMUM PARTICLE SIZE
  DEW POINT AT LINE PRESSURE AT LEAST 18°F BELOW MINIMUM AMBIENT TEMPERATURE TO WHICH ANY PART OF THE COMPRESSED AIR SYSTEM IS EXPOSED, BUT NOT TO EXCEED 35°F.
- AIR TO BE FREE OF ALL CORROSIVE CONTAMINATES AND FLAMMABLE OR TOXIC GASES

CLEAN, DRY COMPRESSED AIR

THE REQUIREMENTS FOR CLEAN, DRY COMPRESSED AIR ARE AS FOLLOWS:

- 100 MICRON MAXIMUM PARTICLE SIZE
- DEW POINT AT LINE PRESSURE AT LEAST 18°F BELOW MINIMUM AMBIENT TEMPERATURE TO WHICH ANY PART OF THE COMPRESSED AIR SYSTEM IS EXPOSED, BUT NOT TO EXCEED 35°F.

IF A SINGLE COMPRESSED AIR SOURCE IS USED FOR ALL EQUIPMENT, LUBRICATORS MAY BE REQUIRED FOR NON-FILTER APPLICATIONS.

ALL COMPRESSED AIR MAIN AND BRANCH SUPPLY LINES MUST BE SIZED, BY OTHERS, TO PROVIDE THE AIR FLOW QUANTITY AND PRESSURE REQUIREMENTS SHOWN ON THE DRAWING AT THE VARIOUS EQUIPMENT LOCATIONS.

AIR USAGE FOR ACTUATOR SIZING PURPOSES IS BASED ON THE MAXIMUM PRESSURE SHOWN ON THE P&ID'S FOR THE ACTUATOR.

FILTER SEPARATORS AND VENT FILTERS ARE DESIGNED FOR 80 PSIG MINIMUM. OPERATION OF PULSE CLEANED FILTERS USING COMPRESSED AIR BELOW 80 PSIG SERIOUSLY AFFECTS THE FILTER CLEANING EFFICIENCY. CLEANING EFFICIENCY CANNOT BE GUARANTEED AT PRESSURE BELOW 80 PSIG.

ALL PIPING SHOULD BE BLOWN CLEAN BEFORE CONTROL COMPONENTS ARE OPERATED.

## GENERAL PIPING NOTES

LOCATE TEST OR MONITORING CONNECTIONS IN APPROXIMATE LOCATION SHOWN ON THE DRAWINGS. THEY SHOULD BE AT LEAST 10 PIPE DIAMETERS DOWNSTREAM AND AT LEAST 2 PIPE DIAMETERS UPSTREAM OF ANY PIPE FITTING, ORIFICE OR VALVE IF POSSIBLE. THESE CONNECTIONS ARE ONLY SHOWN FOR CLARITY AND ARE NOT FURNISHED BY UCC UNLESS SHOWN ON THE BILLS OF MATERIAL.

ALTHOUGH GRAPHICALLY SHOWN AS (TC) TEST CONNECTIONS SHOULD CONSIST OF A 1/4" (UNLESS NOTED) ISOLATION VALVE WITH PIPE PLUG.

'S' SHOWN NEAR THE KNIFE GATE INDICATES SEAT SIDE OF THE VALVE

HIGH PRESSURE AIR PIPING FROM PRESSURE RELIEF VALVES MUST BE VENTED TO ATMOSPHERE AWAY FROM PERSONNEL. FOR PIPE RUNS LESS THAN 25 FEET, THE PIPE DIAMETER MUST BE INCREASED 1" OVER THE RELIEF VALVE OUTLET DIAMETER. FOR LONGER RUNS, CALCULATIONS MUST BE MADE TO DETERMINE THE PIPE DIAMETER TO BE USED.

COMPRESSED AIR, WATER SUPPLY AND DRAIN PIPE SIZES SHOWN ARE BASED ON U.S. STANDARD STEEL PIPE UNLESS OTHERWISE NOTED AND ARE MINIMUM SIZES RECOMMENDED. IF HEAVIER PIPE OR TUBING IS USED, IT SHOULD HAVE EQUAL OR GREATER ID.

ACTUAL PIPING LENGTH, NUMBER OF FITTINGS AND ELEVATION LIFTS MUST BE CHECKED AND SIZES INCREASED WHERE NECESSARY TO GIVE THE FLOW AND PRESSURE REQUIRED AT THE END USE EQUIPMENT.

UNIONS OR FLANGES MUST BE USED, AS REQUIRED BY FIELD CONDITIONS, TO ALLOW REMOVAL OF ALL VALVES, NOZZLES AND DEVICES FOR INSPECTION, MAINTENANCE OR REPLACEMENT.

ALL CONTROL EQUIPMENT SHOULD BE LOCATED IN A CONVENIENT AND ACCESSIBLE LOCATION FOR OPERATION, ADJUSTMENT AND MAINTENANCE.

WHERE WATER PIPING OR PIPING WITH CONDENSATION IS EXPOSED TO FREEZING WEATHER, INSULATE AND HEAT TRACE AS NECESSARY. INSULATION AND HEAT TRACING TO BE FURNISHED BY OTHERS.

ALL PIPING MUST BE DESIGNED AND INSTALLED IN ACCORDANCE WITH GENERALLY ACCEPTED PIPING PRACTICES, STANDARDS AND APPLICABLE CODES.

AIR LINES THAT RUN TO END USE EQUIPMENT ARE TO BE TAKEN FROM THE TOP OF THE SUPPLY HEADERS. HEADERS AND BRANCHES ARE TO BE PITCHED DOWNWARD IN THE DIRECTION OF FLOW AND ARE TO BE PROVIDED WITH A DRIP LEG AT THE END, ALONG WITH A TRAP OR DRAIN VALVE.

## MECHANICAL DRAWING INDEX:

| NUMBER | TITLE |
|---|---|
| 514-55700-1 | P & I DIAGRAM - GENERAL NOTES - UNITS 1 & 2 |
| 514-55700-2 | P & I DIAGRAM - STANDARD SYMBOLS - UNITS 1 & 2 |
| 514-55700-3 | P & I DIAGRAM - FLY ASH VACUUM SYSTEM - ECONOMIZER AND AIR HEATER HOPPERS - UNIT 1 |
| 514-55700-4 | P & I DIAGRAM - FLY ASH VACUUM SYSTEM - ECONOMIZER AND AIR HEATER HOPPERS - UNIT 2 |
| 514-55700-5 | P & I DIAGRAM - FLY ASH VACUUM SYSTEM BAGHOUSE HOPPERS - UNIT 1 |
| 514-55700-6 | P & I DIAGRAM - FLY ASH VACUUM SYSTEM BAGHOUSE HOPPERS - UNIT 2 |
| 514-55700-7 | P & I DIAGRAM - FLY ASH CONVEYOR CROSSOVER TO FLY ASH STORAGE SILOS - UNITS 1 & 2 |
| 514-55700-8 | P & I DIAGRAM - FLY ASH STORAGE SILO ROOF EQUIPMENT - UNITS 1 & 2 |
| 514-55700-9 | P & I DIAGRAM - FLY ASH SILO FILTER / SEPARATORS - UNITS 1 & 2 |
| 514-55700-10 | P & I DIAGRAM - FLY ASH VACUUM EXHAUSTERS - UNITS 1 & 2 |
| 514-55700-11 | P & I DIAGRAM - FLY ASH SYSTEM COMPRESSED AIR - UNIT 1 & 2 |
| 514-55700-12 | P & I DIAGRAM - AQCS RECYCLE BIN FILTER / SEPARATORS - UNITS 1 & 2 |
| 514-55700-13 | P & I DIAGRAM - BED ASH DRY FLIGHT CONVEYORS - UNIT 1 |
| 514-55700-14 | P & I DIAGRAM - BED ASH DRY FLIGHT CONVEYORS - UNIT 2 |
| 514-55700-15 | P & I DIAGRAM - BED ASH PRESSURE AIR LOCK VESSEL ASSEMBLIES - UNITS 1 & 2 |
| 514-55700-16 | P & I DIAGRAM - BED ASH PRESSURE SYSTEM - UNIT 1 & 2 |
| 514-55700-17 | P & I DIAGRAM - BED ASH TRANSPORT BLOWERS - UNITS 1 & 2 |
| 514-55700-18 | P & I DIAGRAM - BED ASH STORAGE SILOS - UNITS 1 & 2 |
| 514-55700-19 | P & I DIAGRAM - BED ASH SYSTEM COMPRESSED AIR - UNITS 1 & 2 |
| SK14-55700-1 | OPERATING INSTRUCTIONS FOR FLY ASH HANDLING SYSTEM - UNITS 1 & 2 |
| SK14-55700-2 | ELECTRICAL LOAD LIST - UNITS 1 & 2 |
| SK14-55700-3 | OPERATING INSTRUCTIONS FOR BED ASH HANDLING SYSTEM - UNITS 1 & 2 |
| 114-55700-1 | INSTRUMENT LIST - UNITS 1 & 2 |

[C]

## ABBREVIATIONS LIST

| | |
|---|---|
| ACFM | ACTUAL CUBIC FEET PER MINUTE |
| AL | AIR LINE PIPE |
| ANSI | AMERICAN NATIONAL STANDARDS INSTITUTE |
| ASTM | AMERICAN SOCIETY FOR TESTING MATERIALS |
| ASSY | ASSEMBLY |
| B | BASALT |
| BC | BOLT CIRCLE |
| B/M | BILL OF MATERIAL |
| CFM | CUBIC FOOT PER MINUTE |
| CS | CARBON STEEL |
| CI | CAST IRON |
| °C | DEGREES CELSIUS |
| CL | CENTERLINE |
| CO | CLEANOUT |
| CONN | CONNECTION |
| CU | CUBIC |
| CU FT | CUBIC FEET |
| CU IN | CUBIC INCH |
| D | DURITE ® PIPE |
| DI | DUCTILE IRON |
| DIA | DIAMETER |
| DN | NOMINAL DIAMETER |
| DWG | DRAWING |
| EL | ELEVATION |
| °F | DEGREES FAHRENHEIT |
| FL | FLOOR LEVEL |
| FLG | FLANGE |
| FF | FLAT FACE |
| FO | FAIL OPEN |
| FPT | FEMALE PIPE THREAD |
| FT | FOOT |
| GL | GRADE LEVEL |
| GPM | GALLONS PER MINUTE |
| h | HOUR |
| Hz | HERTZ |
| HP | HORSEPOWER |
| HYDR | HYDRAULIC |
| ICFM | INLET CUBIC FEET PER MINUTE |
| ID | INSIDE DIAMETER |
| IN | INCH |
| IN LB | INCH-POUND |
| kPa | KILOPASCAL |
| kW | KILOWATT |
| lb | POUND |
| LS | LIMIT SWITCH |
| m | METER |
| MATL | MATERIAL |
| MAX | MAXIMUM |
| MIN | MINIMUM |
| min | MINUTE |
| mm | MILLIMETER |
| MSL | MEAN SEA LEVEL |
| MT | METRIC TON |
| N | NUVALOY ® PIPE |
| NA | NOT APPLICABLE |
| $Nm^3/h$ | NORMAL CUBIC METERS PER HOUR |
| N/C | NORMALLY CLOSED |
| NF | NOT FURNISHED |
| NO | NUMBER |
| N/O | NORMALLY OPEN |
| NPT | NATIONAL PIPE TAPER (THREADED) |
| NTS | NOT TO SCALE |
| OD | OUTSIDE DIAMETER |
| ODP | OPEN DRIP PROOF |
| Ph | PHASE |
| PLC | PROGRAMMABLE LOGIC CONTROLLER |
| PN | PART NUMBER |
| PPM | PARTS PER MILLION |
| PSIA | POUNDS PER SQUARE INCH ABSOLUTE |
| PSIG | POUNDS PER SQUARE INCH GAUGE |
| QTY | QUANTITY |
| REF | REFERENCE |
| REQD | REQUIRED |
| RF | RAISED FACE |
| RPM | REVOLUTION PER MINUTE |
| s | SECONDS |
| SCFM | STANDARD CUBIC FOOT PER MINUTE |
| SCH | SCHEDULE |
| SI | INTERNATIONAL SYSTEM OF UNITS |
| SP | STEEL PIPE |
| SS | STAINLESS STEEL |
| SSPC | STEEL STRUCTURES PAINTING COUNCIL |
| STD | STANDARD |
| STL | STEEL |
| T | U.S. SHORT TON (2000 LB) |
| TC | TEST CONNECTION |
| TDH | TOTAL DYNAMIC HEAD |
| TEFC | TOTALLY ENCLOSED FAN COOLED |
| 3PH | THREE PHASE |
| TYP | TYPICAL |
| UCC® | UNITED CONVEYOR CORPORATION |
| W/ | WITH |
| WC | WATER COLUMN |
| WG | WATER GAUGE |
| W/O | WITH OUT |

### STANDARD SYMBOLS

| | |
|---|---|
| & | AND |
| ⏥ | SQUARE |
| = | EQUAL |
| " | INCH |
| ' | FOOT |
| ϕ | DIAMETER |
| # | POUND OR NUMBER |

### REFERENCES:

STRUCTURAL DRAWING ———— 523-55700-1
CONVEYOR AND SERVICE PIPING DRAWING ———— 510-55700-1
ELECTRICAL DRAWINGS ———— 542-55700-1 UNIT 1
542-55700-37 UNIT 2

CERTIFIED FOR APPLICATION WITH ... CONVEYOR UNITED CONVEYOR CORPORATION DATE 01/30/01

| REVISION | DESCRIPTION | DATE | DSGN | CHKD | APPD (ENGR) | APPD (PROJ) |
|---|---|---|---|---|---|---|
| | | / / | | | | |
| | | / / | | | | |
| | | / / | | | | |
| | | / / | | | | |
| | | / / | | | | |
| | | / / | | | | |
| | | / / | | | | |
| C | REVISED PER FWUSA AND UCC REVIEW - CERTIFIED | 01/30/01 | SMZ | GAK | RDH | RDH |
| B | REVISED PER FWUSA AND UCC REVIEW - CERTIFIED | 08/31/00 | SMZ | GAK | RDH | RDH |
| A | INITIAL SUBMITTAL | 04/25/00 | SMZ | JAK | RDH | RDH |

THIS DRAWING SHALL NOT BE CONSIDERED A CERTIFIED DOCUMENT UNLESS WRITTEN APPROVAL SIGNATURES OR INITIALS ARE PRESENT.

THIS DRAWING IS AN UNPUBLISHED COPYRIGHTED WORK CONTAINING PROPRIETARY INFORMATION OF UNITED CONVEYOR CORPORATION, AND IS LOANED FOR USE IN THE CONDUCT OF COMPANY BUSINESS ONLY. THIS COPY HAS BEEN PROVIDED ON THE BASIS OF STRICT CONFIDENTIALITY AND WITH THE EXPRESS UNDERSTANDING THAT EXCEPT IN THE CONDUCT OF UNITED CONVEYOR CORPORATION BUSINESS, IT MAY NOT BE REPRODUCED, OR REVEALED TO ANY PERSON, IN WHOLE OR IN PART, WITHOUT EXPRESS WRITTEN PERMISSION FROM UNITED CONVEYOR CORPORATION, WHICH IS THE SOLE OWNER OF COPYRIGHT AND ALL OTHER RIGHTS THEREIN. BY RECEIVING THIS DRAWING, THE RECIPIENT AGREES TO RETURN IT UPON REQUEST.

THE INSTALLATION AND OPERATION OF UNITED CONVEYOR CORPORATION EQUIPMENT, IN ACCORDANCE WITH APPROVED PLANS AND OPERATING INSTRUCTIONS, SHALL BE THE SOLE RESPONSIBILITY OF THE PURCHASER, UNLESS OTHERWISE SPECIFIED BY CONTRACT.

COST OF ANY MODIFICATIONS TO UNITED CONVEYOR CORPORATION EQUIPMENT TO AVOID FIELD OBSTRUCTIONS, OR CORRECTIONS DUE TO MINOR DRAWING AND/OR FABRICATION ERRORS, ARE NOT CHARGEABLE TO UNITED CONVEYOR CORPORATION. WE WILL ACCEPT NO BACKCHARGES FOR ANY WORK PERFORMED IN THE FIELD UNLESS APPROVED BY OUR SERVICE GROUP (U.C. SERVICE CORPORATION) AT WAUKEGAN.

| SCALE | CONTRACT NUMBER | SUBSYSTEM | DRAWING LETTER IDENTIFICATION |
|---|---|---|---|
| NONE | 55700-01 | - | - |

TAG NUMBERS N00-NA00
N00-NB00
FW CONTRACT 13-004600
FW REQN. NO. 4605-1361-A
FW ORDER NO. PP-0010-13-004600
FOR:
JEA
NORTHSIDE UNITS 1 & 2 REPOWERING PROJECT
JACKSONVILLE, FL

B & V DWG. NO. 62.1801.05 - ~~0001~~ C0003

DRAWING TITLE: P & I DIAGRAM GENERAL NOTES UNITS 1 & 2

PLANT NAME: JACKSONVILLE ELECTRIC AUTHORITY NORTHSIDE GENERATING STATION JACKSONVILLE, FL

UNITED CONVEYOR CORPORATION
2100 NORMAN DRIVE WEST
WAUKEGAN, ILLINOIS 60085

DRAWING NUMBER: 514-55700-1 REVISION: C

N:\PROJECTS\55700\514-001.DGN

FORM 9820-09 04/97

P062713.62.1801.05-C0003 St:RD 02/28/01 MM-01592

CRA33213 11-SEP-2002 14:08:03

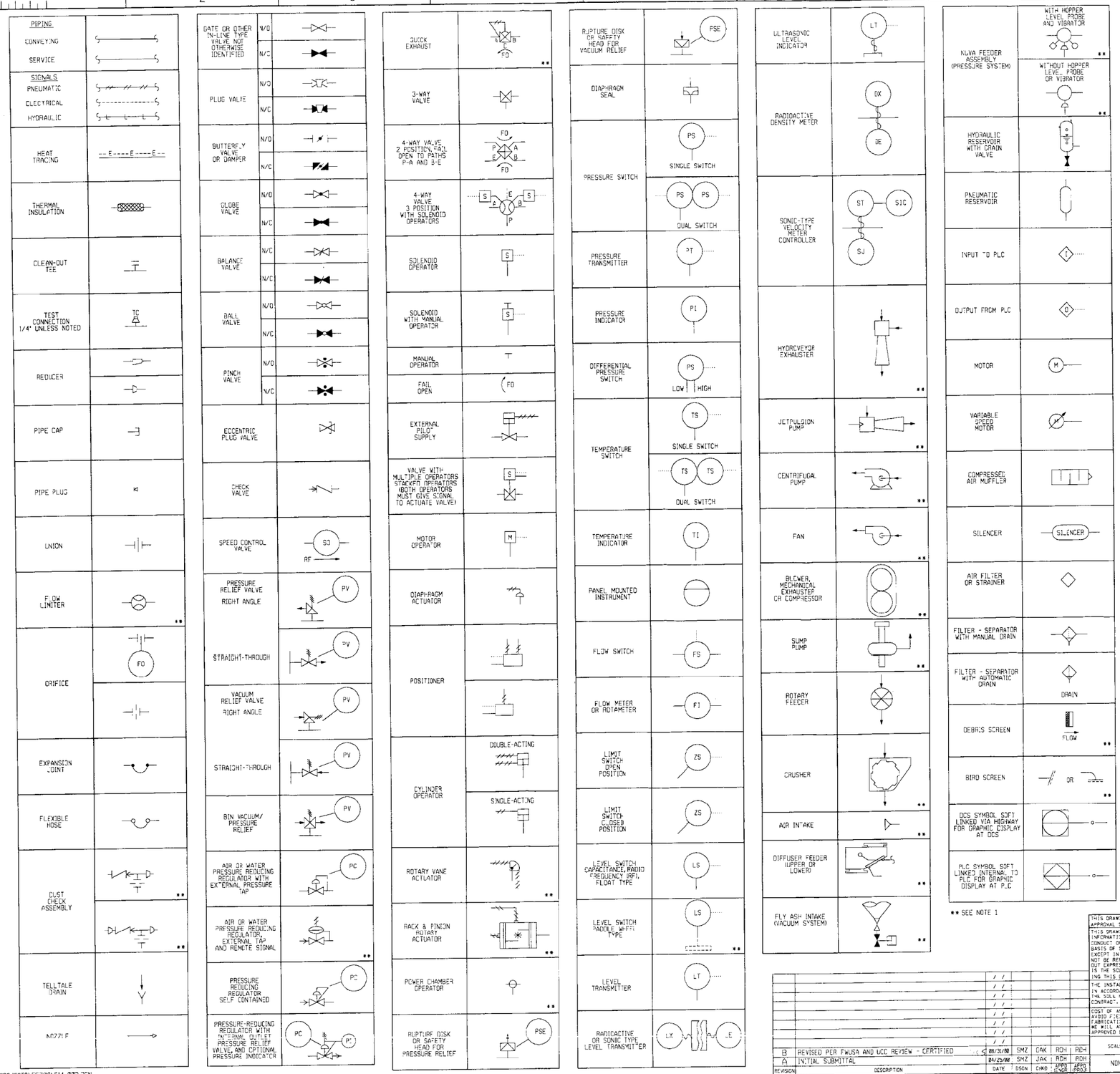


## MEANINGS OF IDENTIFICATION LETTERS

THIS TABLE APPLIES ONLY TO THE FUNCTIONAL IDENTIFICATION OF INSTRUMENTS.

| | FIRST LETTER | | SUCCEEDING LETTERS | | |
|---|---|---|---|---|---|
| | MEASURED OR INITIATING VARIABLE | MODIFIER | READOUT OR PASSIVE FUNCTION | OUTPUT FUNCTION | MODIFIER |
| A | ANALYSIS | | ALARM | | |
| B | | | USER'S CHOICE | USER'S CHOICE | USER'S CHOICE |
| C | CONDUCTIVITY (ELECTRICAL) | | | CONTROL | |
| D | DENSITY (MASS) OR SPECIFIC GRAVITY | DIFFERENTIAL | | | |
| E | VOLTAGE (EMF) | | PRIMARY ELEMENT | | |
| F | FLOW RATE | RATIO (FRACTION) | | | |
| G | | | GLASS | | |
| H | HAND (MANUALLY INITIATED) | | | | HIGH |
| I | CURRENT (ELECTRICAL) | | INDICATE | | |
| J | POWER | SCAN | | | |
| K | TIME OR TIME-SCHEDULE | | | CONTROL STATION | |
| L | LEVEL | | LIGHT | | LOW |
| M | MOISTURE | MOMENTARY | | | MIDDLE |
| N | USER'S CHOICE | | USER'S CHOICE | USER'S CHOICE | USER'S CHOICE |
| O | USER'S CHOICE | | ORIFICE (RESTRICTION) | | |
| P | PRESSURE OR VACUUM | | POINT (TEST CONNECTION) | | |
| Q | QUANTITY OR EVENT | INTEGRATE OR TOTALIZE | | | |
| R | RADIOACTIVITY | | RECORD OR PRINT | | |
| S | SPEED OR FREQUENCY | SAFETY | | SWITCH | |
| T | TEMPERATURE | | | TRANSMIT | |
| U | | | | | |
| V | VISCOSITY | | | VALVE, DAMPER OR LOUVER | |
| W | WEIGHT OR FORCE | | WELL | | |
| X | UNCLASSIFIED | | UNCLASSIFIED | UNCLASSIFIED | UNCLASSIFIED |
| Y | USER'S CHOICE | | | RELAY OR COMPUTE | |
| Z | POSITION | | | DRIVE, ACTUATE OR UNCLASSIFIED FINAL CONTROL ELEMENT | |

*REPRINTED BY PERMISSION. COPYRIGHT © INSTRUMENT SOCIETY OF AMERICA 1984. FROM ISA STANDARD S5.1: INSTRUMENTATION SYMBOLS AND IDENTIFICATION.*

NOTES

1. SYMBOLS ARE IN ACCORDANCE WITH ISA STANDARD S5.1, ASA Z32.11, OR USAS Y32.10 UNLESS MARKED WITH **.
2. THE "RF" USED IN THE SPEED CONTROL VALVES SIGNIFIES RESTRICTED FLOW.
3. THE STANDARD TAGGING PREFIXES USED ARE:

DE - DENSITY ELEMENT - RECEIVER
DX - DENSITY - RADIOACTIVE SOURCE
FI - FLOW INDICATOR
FV - FLOW CONTROL VALVE
FO - FLOW ORIFICE
FS - FLOW SWITCH
LE - LEVEL ELEMENT
LS - LEVEL SWITCH
LT - LEVEL TRANSMITTER
LX - LEVEL - RADIOACTIVE SOURCE
KS - PULSING TIMER
M - MOTOR ACTUATOR
PC - PRESSURE CONTROL VALVE
PS - PRESSURE DIFFERENTIAL SWITCH HIGH
PS - PRESSURE DIFFERENTIAL SWITCH LOW
PI - PRESSURE INDICATOR
PS - PRESSURE SWITCH
PV - PRESSURE SAFETY VALVE
PT - PRESSURE TRANSMITTER
SV - SOLENOID AIR VALVE
SC - SPEED CONTROL VALVE
SJ - SPEED SCANNER
ST - SPEED TRANSMITTER
SS - SPEED SWITCH
TI - TEMPERATURE INDICATOR
TS - TEMPERATURE SWITCH
YT - DUST DETECTOR TRANSMITTER
ZS - LIMIT SWITCH - OPEN (LOWER TAG NUMBER)
ZS - LIMIT SWITCH - CLOSED (HIGHER TAG NUMBER)

CERTIFIED FOR APPLICATION WITH ASB CONVEYOR
UNITED CONVEYOR CORPORATION
DATE 9/19/02

FOR GENERAL NOTES AND REFERENCES SEE DRAWING 514-55700-1

THIS DRAWING SHALL NOT BE CONSIDERED A CERTIFIED DOCUMENT UNLESS WRITTEN APPROVAL SIGNATURES OR INITIALS ARE PRESENT.

THIS DRAWING IS AN UNPUBLISHED COPYRIGHTED WORK CONTAINING PROPRIETARY INFORMATION OF UNITED CONVEYOR CORPORATION, AND IS LOANED FOR USE IN THE CONDUCT OF COMPANY BUSINESS ONLY. THIS COPY HAS BEEN PROVIDED ON THE BASIS OF STRICT CONFIDENTIALITY AND WITH THE EXPRESS UNDERSTANDING THAT EXCEPT IN THE CONDUCT OF UNITED CONVEYOR CORPORATION BUSINESS, IT MAY NOT BE REPRODUCED, OR REVEALED TO ANY PERSON, IN WHOLE OR IN PART, WITHOUT EXPRESS WRITTEN PERMISSION FROM UNITED CONVEYOR CORPORATION, WHICH IS THE SOLE OWNER OF COPYRIGHT AND ALL OTHER RIGHTS THEREIN. BY RECEIVING THIS DRAWING, THE RECIPIENT AGREES TO RETURN IT UPON REQUEST.

THE INSTALLATION AND OPERATION OF UNITED CONVEYOR CORPORATION EQUIPMENT, IN ACCORDANCE WITH APPROVED PLANS AND OPERATING INSTRUCTIONS, SHALL BE THE SOLE RESPONSIBILITY OF THE PURCHASER, UNLESS OTHERWISE SPECIFIED BY CONTRACT.

COST OF ANY MODIFICATIONS TO UNITED CONVEYOR CORPORATION EQUIPMENT TO AVOID FIELD OBSTRUCTIONS, OR CORRECTIONS DUE TO MINOR DRAWING AND/OR FABRICATION ERRORS, ARE NOT CHARGEABLE TO UNITED CONVEYOR CORPORATION. WE WILL ACCEPT NO BACKCHARGES FOR ANY WORK PERFORMED IN THE FIELD UNLESS APPROVED BY OUR SERVICE GROUP (U.C. SERVICE CORPORATION) AT WAUKEGAN.

| REVISION | DESCRIPTION | DATE | DSGN | CHKD | APPD (CUST) | APPD (UCC) |
|---|---|---|---|---|---|---|
| B | REVISED PER FWUSA AND UCC REVIEW - CERTIFIED | 08/31/00 | SMZ | DAK | RDH | RDH |
| A | INITIAL SUBMITTAL | 04/25/00 | SMZ | JAK | RDH | RDH |

| SCALE | CONTRACT NUMBER | SUBSYSTEM | DRAWING TITLE IDENTIFICATION |
|---|---|---|---|
| NONE | 55700-1 | - | - |

TAG NUMBERS N00-N002
N02-N0200
FW CONTRACT 13-024600
FW REQN. NO. 4625-1361-A
FW ORDER NO. PP-0010-13-024600
FOR:
JEA
NORTHSIDE UNITS 1 & 2 REPOWERING PROJECT
JACKSONVILLE, FL

B & V DWG. NO. 62.1801.05 - ~~C0002~~ C0004

DRAWING TITLE
P & I DIAGRAM
STANDARD SYMBOLS
UNITS 1 & 2

PLANT NAME
JACKSONVILLE ELECTRIC AUTHORITY
NORTHSIDE GENERATING STATION
JACKSONVILLE, FL

UNITED CONVEYOR CORPORATION
2100 NORMAN DRIVE WEST
WAUKEGAN, ILLINOIS 60085

DRAWING NUMBER 514-55700-2
REVISION B

N:\PROJECTS\55700\514-002.DGN

P062713.62.1801.05-C0004 St:RD 02/28/01 MM-01592

| ITEM * ABC-N | DRAWING NUMBER | PART NUMBER | QTY | DESCRIPTION |
|---|---|---|---|---|
| RAB-1 | 5-1812-1 | SK-55700-1812-1 | 14 | INTAKE - FLYASH, 12" X 10" AIR CYLINDER OPERATED WITH |
| | | | | SOLENOID AIR VALVE, FULLY ASSEMBLED |
| | | | | |
| RAB-2 | 5-1918-3 | SK-55700-1918-3-1 | 4 | VALVE - KNIFE GATE, 10", 40D, AIR CYLINDER OPERATED |
| | | | | WITH TWO NEMA 4X LIMIT SWITCHES AND NUMATICS |
| | | | | SOLENOID AIR VALVE, FULLY ASSEMBLED |
| | | | | |
| | | | | |
| | | | | |

NOTES:
1. REFER TO DRAWING 514-55700-11 FOR COMPRESSED AIR REQUIREMENTS AND ARRANGEMENT.

2. THE LETTER "S" ADJACENT TO A GATE DENOTES THE SEAT SIDE OF THE GATE FOR PROPER INSTALLATION ORIENTATION.

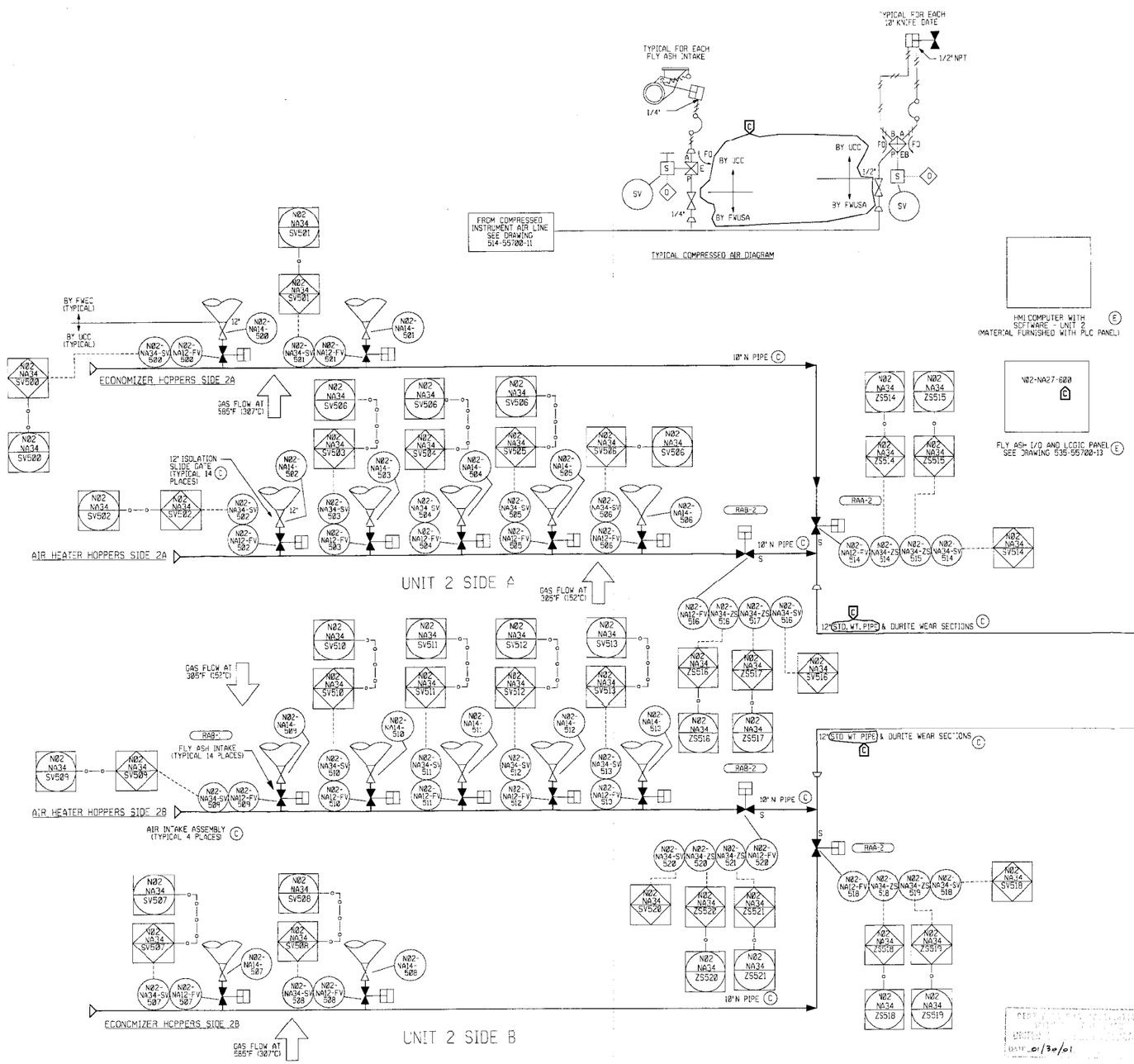


FOR GENERAL NOTES AND REFERENCES SEE DRAWING 514-55700-1

THIS DRAWING SHALL NOT BE CONSIDERED A CERTIFIED DOCUMENT UNLESS WRITTEN APPROVAL SIGNATURES OR INITIALS ARE PRESENT.

THIS DRAWING IS AN UNPUBLISHED COPYRIGHTED WORK CONTAINING PROPRIETARY INFORMATION OF UNITED CONVEYOR CORPORATION, AND IS LOANED FOR USE IN THE CONDUCT OF COMPANY BUSINESS ONLY. THIS COPY HAS BEEN PROVIDED IN THE BASIS OF STRICT CONFIDENTIALITY AND WITH THE EXPRESS UNDERSTANDING THAT EXCEPT IN THE CONDUCT OF UNITED CONVEYOR CORPORATION BUSINESS, IT MAY NOT BE REPRODUCED, OR REVEALED TO ANY PERSON, IN WHOLE OR IN PART, WITHOUT EXPRESS WRITTEN PERMISSION FROM UNITED CONVEYOR CORPORATION, WHICH IS THE SOLE OWNER OF COPYRIGHT AND ALL OTHER RIGHTS THEREIN. BY RECEIVING THIS DRAWING, THE RECIPIENT AGREES TO RETURN IT UPON REQUEST.

THE INSTALLATION AND OPERATION OF UNITED CONVEYOR CORPORATION EQUIPMENT, IN ACCORDANCE WITH APPROVED PLANS AND OPERATING INSTRUCTIONS, SHALL BE THE SOLE RESPONSIBILITY OF THE PURCHASER, UNLESS OTHERWISE SPECIFIED BY CONTRACT.

COST OF ANY MODIFICATIONS TO UNITED CONVEYOR CORPORATION EQUIPMENT TO AVOID FIELD OBSTRUCTIONS, OR CORRECTIONS DUE TO MINOR DRAWING AND/OR FABRICATION ERRORS, ARE NOT CHARGEABLE TO UNITED CONVEYOR CORPORATION. WE WILL ACCEPT NO BACKCHARGES FOR ANY WORK PERFORMED IN THE FIELD UNLESS APPROVED BY OUR SERVICE GROUP (U.C. SERVICE CORPORATION) AT WAUKEGAN.

| REVISION | DESCRIPTION | DATE | DSGN | CHKD | APPD (SALES) | APPD (PROJ) |
|---|---|---|---|---|---|---|
| C | REVISED PER FWUSA AND UCC REVIEW - CERTIFIED | 01/30/01 | SMZ | OAK | RDH | RDH |
| B | REVISED PER FWUSA AND UCC REVIEW - CERTIFIED | 09/14/00 | SMZ | OAK | RDH | RDH |
| A | INITIAL SUBMITTAL | 04/25/00 | SMZ | OAK | RDH | RDH |

| SCALE | CONTRACT NUMBER | SUBSYSTEM | DRAWING LETTER IDENTIFICATION |
|---|---|---|---|
| NONE | 55700-01 | R | AB |

TAG NUMBERS N02-NA02
FW CONTRACT 13-024600
FW REQN. NO. 4626-:351-A
FW ORDER NO. PP-0018-13-024600
FOR:
JEA
NORTHSIDE UNITS 1 & 2 REPOWERING PROJECT
JACKSONVILLE, FL

B & V DWG. NO. 62.1801.05 - C0006

DRAWING TITLE
P & I DIAGRAM
FLY ASH VACUUM SYSTEM
ECONOMIZER AND AIR HEATER HOPPERS
UNIT 2

PLANT NAME
JACKSONVILLE ELECTRIC AUTHORITY
NORTHSIDE GENERATING STATION
JACKSONVILLE, FLORIDA

UNITED CONVEYOR CORPORATION
2000 NORMAN DRIVE WEST
WAUKEGAN, ILLINOIS 60085

DRAWING NUMBER: 514-55700-4
REVISION: C

FORM 9820-09 04/97

N:\PROJECTS\55700\514-024.DGN

CRA33213 11-SEP-2002 14:05:27

P062713.62.1801.05-C0006 St:RD 02/28/01 MM-01592

CRA33213 11-SEP-2002 14:03:54

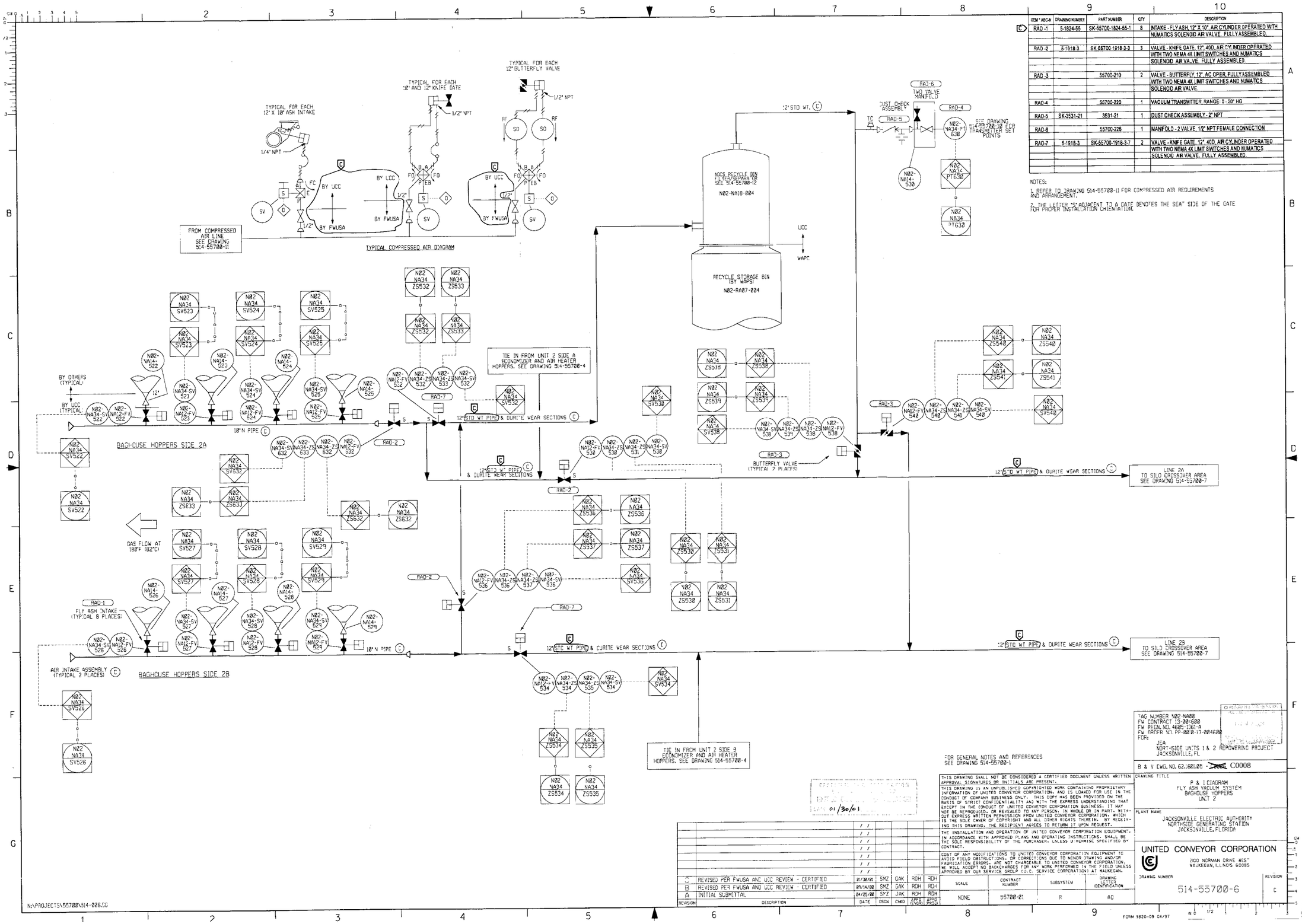


| ITEM * ABC-N | DRAWING NUMBER | PART NUMBER | QTY | DESCRIPTION |
|---|---|---|---|---|
| RAD-1 | 5-1824-55 | SK-55700-1824-55-1 | 8 | INTAKE - FLY ASH, 12" X 10", AIR CYLINDER OPERATED WITH NUMATICS SOLENOID AIR VALVE, FULLY ASSEMBLED. |
| RAD-2 | 5-1918-3 | SK-55700-1918-3-3 | 3 | VALVE - KNIFE GATE, 12", 40D, AIR CYLINDER OPERATED WITH TWO NEMA 4X LIMIT SWITCHES AND NUMATICS SOLENOID AIR VALVE, FULLY ASSEMBLED. |
| RAD-3 | | 55700-210 | 2 | VALVE - BUTTERFLY, 12", AC OPER, FULLY ASSEMBLED WITH TWO NEMA 4X LIMIT SWITCHES AND NUMATICS SOLENOID AIR VALVE. |
| RAD-4 | | 55700-220 | 1 | VACUUM TRANSMITTER, RANGE: 0 - 20" HG |
| RAD-5 | SK-3531-21 | 3531-21 | 1 | DUST CHECK ASSEMBLY - 2" NPT |
| RAD-6 | | 55700-226 | 1 | MANIFOLD - 2 VALVE, 1/2" NPT FEMALE CONNECTION |
| RAD-7 | 5-1918-3 | SK-55700-1918-3-7 | 2 | VALVE - KNIFE GATE, 12", 40D, AIR CYLINDER OPERATED WITH TWO NEMA 4X LIMIT SWITCHES AND NUMATICS SOLENOID AIR VALVE, FULLY ASSEMBLED. |

NOTES:

1. REFER TO DRAWING 514-55700-11 FOR COMPRESSED AIR REQUIREMENTS AND ARRANGEMENT.
2. THE LETTER "S" ADJACENT TO A GATE DENOTES THE SEAT SIDE OF THE GATE FOR PROPER INSTALLATION ORIENTATION.

FOR GENERAL NOTES AND REFERENCES SEE DRAWING 514-55700-1

| REVISION | DESCRIPTION | DATE | DSGN | CHKD | APPD (ENGR) | APPD (PROJ) |
|---|---|---|---|---|---|---|
| C | REVISED PER FWUSA AND UCC REVIEW - CERTIFIED | 2/30/01 | SMZ | OAK | RDH | RDH |
| B | REVISED PER FWUSA AND UCC REVIEW - CERTIFIED | 05/14/00 | SMZ | OAK | RDH | RDH |
| A | INITIAL SUBMITTAL | 04/25/00 | SMZ | JAK | RDH | RDH |

01/30/01

THIS DRAWING SHALL NOT BE CONSIDERED A CERTIFIED DOCUMENT UNLESS WRITTEN APPROVAL SIGNATURES OR INITIALS ARE PRESENT.

THIS DRAWING IS AN UNPUBLISHED COPYRIGHTED WORK CONTAINING PROPRIETARY INFORMATION OF UNITED CONVEYOR CORPORATION, AND IS LOANED FOR USE IN THE CONDUCT OF COMPANY BUSINESS ONLY. THIS COPY HAS BEEN PROVIDED ON THE BASIS OF STRICT CONFIDENTIALITY AND WITH THE EXPRESS UNDERSTANDING THAT EXCEPT IN THE CONDUCT OF UNITED CONVEYOR CORPORATION BUSINESS, IT MAY NOT BE REPRODUCED, OR REVEALED TO ANY PERSON, IN WHOLE OR IN PART, WITHOUT EXPRESS WRITTEN PERMISSION FROM UNITED CONVEYOR CORPORATION, WHICH IS THE SOLE OWNER OF COPYRIGHT AND ALL OTHER RIGHTS THEREIN. BY RECEIVING THIS DRAWING, THE RECIPIENT AGREES TO RETURN IT UPON REQUEST.

THE INSTALLATION AND OPERATION OF UNITED CONVEYOR CORPORATION EQUIPMENT, IN ACCORDANCE WITH APPROVED PLANS AND OPERATING INSTRUCTIONS, SHALL BE THE SOLE RESPONSIBILITY OF THE PURCHASER, UNLESS OTHERWISE SPECIFIED BY CONTRACT.

COST OF ANY MODIFICATIONS TO UNITED CONVEYOR CORPORATION EQUIPMENT TO AVOID FIELD OBSTRUCTIONS, OR CORRECTIONS DUE TO MINOR DRAWING AND/OR FABRICATION ERRORS, ARE NOT CHARGEABLE TO UNITED CONVEYOR CORPORATION. WE WILL ACCEPT NO BACKCHARGES FOR ANY WORK PERFORMED IN THE FIELD UNLESS APPROVED BY OUR SERVICE GROUP (U.C. SERVICE CORPORATION) AT WAUKEGAN.

| SCALE | CONTRACT NUMBER | SUBSYSTEM | DRAWING LETTER IDENTIFICATION |
|---|---|---|---|
| NONE | 55700-21 | R | AD |

TAG NUMBER N02-NA00
FW CONTRACT 13-00-6200
FW REQN. NO. 4625-1361-A
FW ORDER NO. PP-2012-13-024620
FOR:
JEA
NORTHSIDE UNITS 1 & 2 REPOWERING PROJECT
JACKSONVILLE, FL

B & V DWG. NO. 62.1821.05 - C0008

DRAWING TITLE
P & I DIAGRAM
FLY ASH VACUUM SYSTEM
BAGHOUSE HOPPERS
UNIT 2

PLANT NAME
JACKSONVILLE ELECTRIC AUTHORITY
NORTHSIDE GENERATING STATION
JACKSONVILLE, FLORIDA

UNITED CONVEYOR CORPORATION
2100 NORMAN DRIVE WEST
WAUKEGAN, ILLINOIS 60085

DRAWING NUMBER 514-55700-6 REVISION C

FORM 9820-09 04/97

P062713.62.1801.05-C0008 St:RD 02/28/01 MM-01592

CRA33213 11-SEP-2002 14:03:20

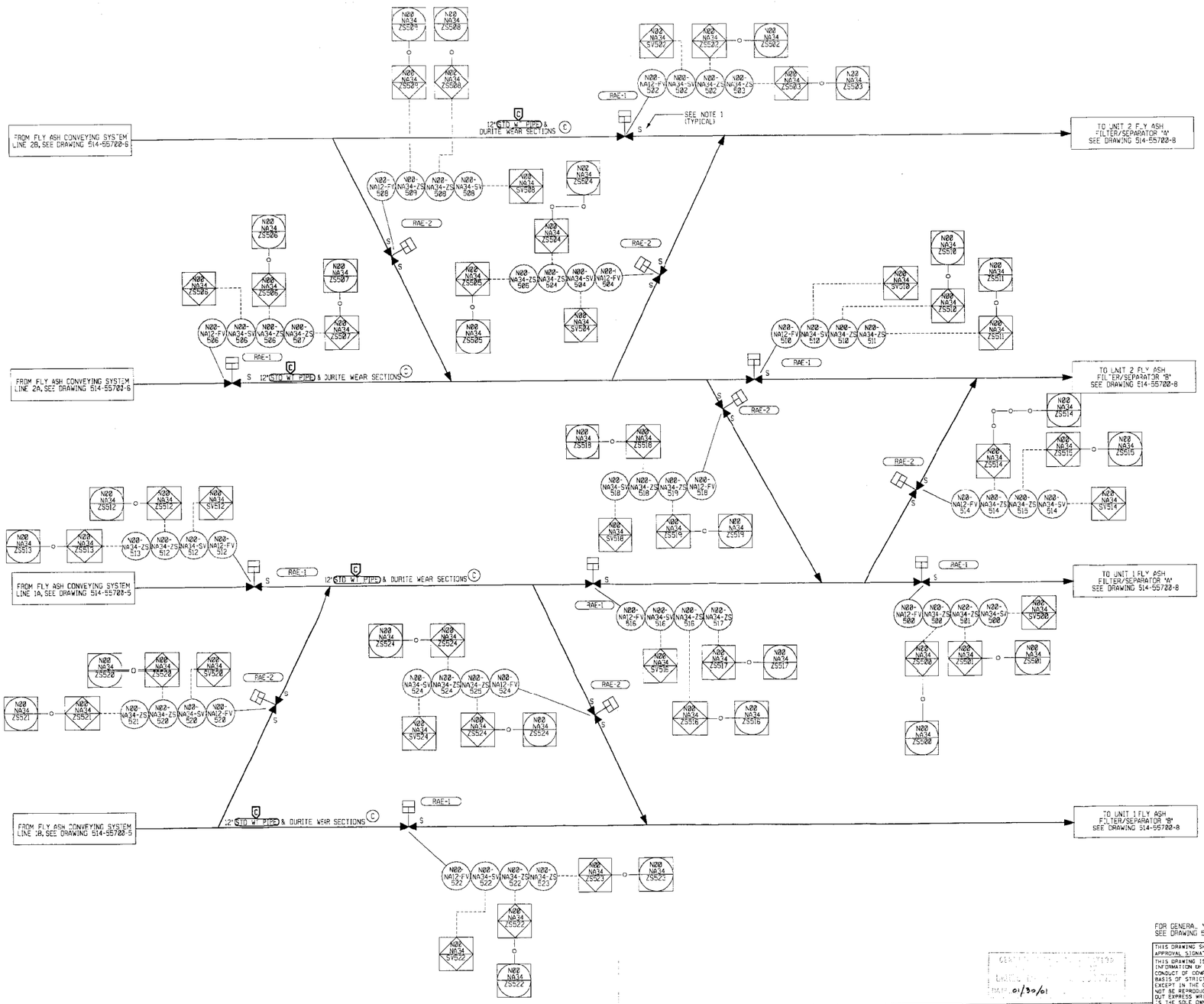


| ITEM * ARC# | DRAWING NUMBER | PART NUMBER | QTY | DESCRIPTION |
|---|---|---|---|---|
| RAE -1 | 5-1918-3 | SK-55700-1918-3-3 | 7 | VALVE - KNIFE GATE 12" 40D, AIR CYLINDER OPERATED |
| | | | | WITH TWO NEMA 4X LIMIT SWITCHES AND NUMATICS |
| | | | | SOLENOID AIR VALVE. FULLY ASSEMBLED, N.C. |
| RAE -2 | 5-1918-3 | SK-55700-1918-3-4 | 6 | VALVE - KNIFE GATE 12" 40D, AIR CYLINDER OPERATED |
| | | | | WITH TWO NEMA 4X LIMIT SWITCHES AND NUMATICS |
| | | | | SOLENOID AIR VALVE. FULLY ASSEMBLED, N.C. |
| | | | | DUAL SEAT. |

NOTES:
1. THE LETTER 'S' ADJACENT TO A GATE DENOTES THE SEAT SIDE OF THE GATE FOR PROPER INSTALLATION ORIENTATION.

2. REFER TO DRAWING 514-55700-11 FOR COMPRESSED AIR REQUIREMENTS AND ARRANGEMENT.

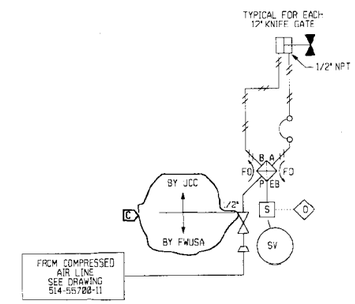


TYPICAL COMPRESSED AIR DIAGRAM

FOR GENERAL NOTES AND REFERENCES SEE DRAWING 514-55700-1

| REVISION | DESCRIPTION | DATE | DSGN | DWKD | APPR (ENGR) | APPR (PROJ) |
|---|---|---|---|---|---|---|
| C | REVISED PER FWUSA AND UCC REVIEW - CERTIFIED | 01/30/01 | SMZ | GAK | RDH | RDH |
| B | REVISED PER FWUSA AND UCC REVIEW - CERTIFIED | 09/14/00 | SMZ | GAK | RDH | RDH |
| A | INITIAL SUBMITTAL | 04/25/00 | SMZ | JAK | RDH | RDH |

THIS DRAWING SHALL NOT BE CONSIDERED A CERTIFIED DOCUMENT UNLESS WRITTEN APPROVAL SIGNATURES OR INITIALS ARE PRESENT.

THIS DRAWING IS AN UNPUBLISHED COPYRIGHTED WORK CONTAINING PROPRIETARY INFORMATION OF UNITED CONVEYOR CORPORATION, AND IS LOANED FOR USE IN THE CONDUCT OF COMPANY BUSINESS ONLY. THIS COPY HAS BEEN PROVIDED ON THE BASIS OF STRICT CONFIDENTIALITY AND WITH THE EXPRESS UNDERSTANDING THAT EXCEPT IN THE CONDUCT OF UNITED CONVEYOR CORPORATION BUSINESS, IT MAY NOT BE REPRODUCED, OR REVEALED TO ANY PERSON, IN WHOLE OR IN PART, WITHOUT EXPRESS WRITTEN PERMISSION FROM UNITED CONVEYOR CORPORATION, WHICH IS THE SOLE OWNER OF COPYRIGHT AND ALL OTHER RIGHTS THEREIN. BY RECEIVING THIS DRAWING, THE RECIPIENT AGREES TO RETURN IT UPON REQUEST.

THE INSTALLATION AND OPERATION OF UNITED CONVEYOR CORPORATION EQUIPMENT, IN ACCORDANCE WITH APPROVED PLANS AND OPERATING INSTRUCTIONS, SHALL BE THE SOLE RESPONSIBILITY OF THE PURCHASER, UNLESS OTHERWISE SPECIFIED BY CONTRACT.

COST OF ANY MODIFICATIONS TO UNITED CONVEYOR CORPORATION EQUIPMENT TO AVOID FIELD OBSTRUCTIONS, OR CORRECTIONS DUE TO MINOR DRAWING AND/OR FABRICATION ERRORS, ARE NOT CHARGEABLE TO UNITED CONVEYOR CORPORATION. WE WILL ACCEPT NO BACKCHARGES FOR ANY WORK PERFORMED IN THE FIELD UNLESS APPROVED BY OUR SERVICE GROUP (U.C. SERVICE CORPORATION) AT WAUKEGAN.

TAG NUMBER N00-N00
FW CONTRACT 13-004600
FW REQN. NO. 4625-136-A
FW ORDER NO. PP-2002-13-004600
FOR:
JEA
NORTHSIDE UNITS 1 & 2 REPOWERING PROJECT
JACKSONVILLE, FL

B & V DWG. NO. 62.1801.05 - C0009

DRAWING TITLE
P & I DIAGRAM
FLY ASH CONVEYOR CROSSOVER TO FLY ASH STORAGE SILOS UNITS 1 & 2

PLANT NAME
JACKSONVILLE ELECTRIC AUTHORITY
NORTHSIDE GENERATING STATION
JACKSONVILLE, FLORIDA

UNITED CONVEYOR CORPORATION
2130 NORMAN DRIVE WEST
WAUKEGAN, ILLINOIS 60085

| SCALE | CONTRACT NUMBER | SUBSYSTEM | DRAWING SITIER IDENTIFICATION |
|---|---|---|---|
| NONE | 55700-01 | R | AE |

DRAWING NUMBER 514-55700-7 REVISION C

N:\PROJECTS\55700\514-007.DGN

FORM 9810-09 04/97

P062713.62.1801.05-C0009 St:RD 02/28/01 MM-01592

CRA33213 11-SEP-2002 14:02:42

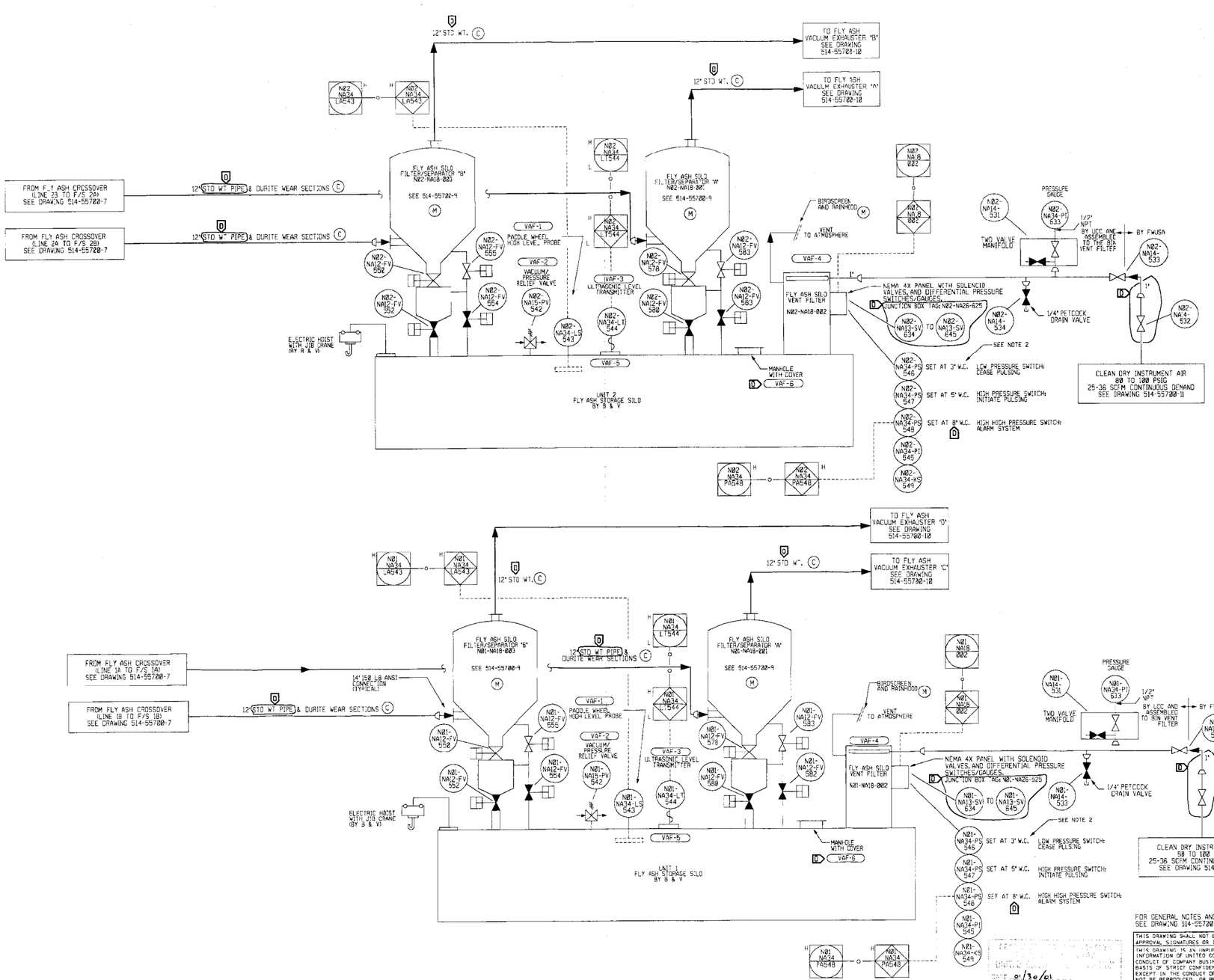


| | ITEM * ABC/N | DRAWING NUMBER | PART NUMBER | QTY | DESCRIPTION |
|---|---|---|---|---|---|
| D | VAF-1 | SK-3403-106 | SK-3403-106-2 | 2 | PROBE - HIGH LEVEL PADDLE WHEEL A = 8'-0" |
| | VAF-2 | 3-1957-32 | 1957-32-3 | 2 | VACUUM / PRESSURE RELIEF VALVE |
| D | VAF-3 | | 34602-1-1-1-070-1-1 | 2 | PROBE - LEVEL, ULTRASONIC, 70 FT |
| | VAF-4 | | 55700-211 | 2 | BIN VENT FILTER PULSE ON DEMAND, WITH NEMA 4X PANEL, PETCOCK DRAIN VALVE, AND STAINLESS STEEL PULSING SYSTEM |
| | VAF-5 | | 34586 | 2 | FLANGE-ADAPTOR ASSEMBLY, ULTRASONIC |
| D | VAF-6 | | 55700-254 | 2 | MANWAY, HINGED, 24" DIAMETER |

NOTES:

1. REFER TO DRAWING 5.4-55700-11 FOR COMPRESSED AIR ARRANGEMENT AND REQUIREMENTS.

2. PULSE ON DEMAND CLEANING REQUIRES THREE DIFFERENTIAL PRESSURE SWITCH SETPOINTS: A HIGH PRESSURE SWITCH SETPOINT TO INITIATE PULSE CLEANING, A LOW PRESSURE SWITCH SETPOINT TO CEASE PULSE CLEANING, AND A HIGH HIGH PRESSURE SWITCH SETPOINT TO ALARM THE DCS SYSTEM. RECOMMENDED SETPOINTS ARE SHOWN AND ARE FIELD ADJUSTABLE.

3. SEE DRAWING 514-55700-9 FOR COMPLETE FILTER/SEPARATOR ASSEMBLY AND TAGGING.

FOR GENERAL NOTES AND REFERENCES SEE DRAWING 514-55700-1

| REVISION | DESCRIPTION | DATE | DSGN | CHKD | APPD (ENGR) | APPD (PROJ) |
|---|---|---|---|---|---|---|
| D | REVISED PER FWUSA AND UCC REVIEW - CERTIFIED | 01/30/01 | SMZ | OAK | RDH | RDH |
| C | REVISED PER FWUSA AND UCC REVIEW - CERTIFIED | 09/14/00 | SMZ | OAK | RDH | RDH |
| B | REVISED PER CUSTOMER COMMENTS | 07/24/00 | SMZ | OAK | RDH | RDH |
| A | INITIAL SUBMITTAL | 04/25/00 | SMZ | JAK | RDH | RDH |

THIS DRAWING SHALL NOT BE CONSIDERED A CERTIFIED DOCUMENT UNLESS WRITTEN APPROVAL SIGNATURES OR INITIALS ARE PRESENT.

THIS DRAWING IS AN UNPUBLISHED COPYRIGHTED WORK CONTAINING PROPRIETARY INFORMATION OF UNITED CONVEYOR CORPORATION, AND IS LOANED FOR USE IN THE CONDUCT OF COMPANY BUSINESS ONLY. THIS COPY HAS BEEN PROVIDED ON THE BASIS OF STRICT CONFIDENTIALITY AND WITH THE EXPRESS UNDERSTANDING THAT EXCEPT IN THE CONDUCT OF UNITED CONVEYOR CORPORATION BUSINESS, IT MAY NOT BE REPRODUCED, OR REVEALED TO ANY PERSON, IN WHOLE OR IN PART, WITHOUT EXPRESS WRITTEN PERMISSION FROM UNITED CONVEYOR CORPORATION, WHICH IS THE SOLE OWNER OF COPYRIGHT AND ALL OTHER RIGHTS THEREIN. BY RECEIVING THIS DRAWING, THE RECIPIENT AGREES TO RETURN IT UPON REQUEST.

THE INSTALLATION AND OPERATION OF UNITED CONVEYOR CORPORATION EQUIPMENT, IN ACCORDANCE WITH APPROVED PLANS AND OPERATING INSTRUCTIONS, SHALL BE THE SOLE RESPONSIBILITY OF THE PURCHASER, UNLESS OTHERWISE SPECIFIED BY CONTRACT.

COST OF ANY MODIFICATIONS TO UNITED CONVEYOR CORPORATION EQUIPMENT TO AVOID FIELD OBSTRUCTIONS, OR CORRECTIONS DUE TO MINOR DRAWING AND/OR FABRICATION ERRORS, ARE NOT CHARGEABLE TO UNITED CONVEYOR CORPORATION. WE WILL ACCEPT NO BACKCHARGES FOR ANY WORK PERFORMED IN THE FIELD UNLESS APPROVED BY OUR SERVICE GROUP (U.C. SERVICE CORPORATION) AT WAUKEGAN.

| SCALE | CONTRACT NUMBER | SUBSYSTEM | DRAWING CLASS IDENTIFICATION |
|---|---|---|---|
| NONE | 55700-01 | V | AF |

TAG NUMBERS N00-N000
FW CONTRACT 13-204600
FW REQN. NO. 4605-1361-A
FW ORDER NO. PP-0010-13-204600
FOR:
JEA
NORTHSIDE UNITS 1 & 2 REPOWERING PROJECT
JACKSONVILLE, FL

B & V DWG. NO. 62.180125 ~~C0010~~ C0010

DRAWING TITLE
P & I DIAGRAM
FLY ASH STORAGE SILO ROOF EQUIPMENT
UNITS 1 & 2

PLANT NAME
JACKSONVILLE ELECTRIC AUTHORITY
NORTHSIDE GENERATING STATION
JACKSONVILLE, FLORIDA

UNITED CONVEYOR CORPORATION
2100 NORMAN DRIVE WEST
WAUKEGAN, ILLINOIS 60085

DRAWING NUMBER: 514-55700-8
REVISION: D

FORM 1820-09 04/97

N:\PROJECTS\55700\514-008.DGN

P062713.62.1801.05-C0010 St:RD 02/28/01 MM-01592

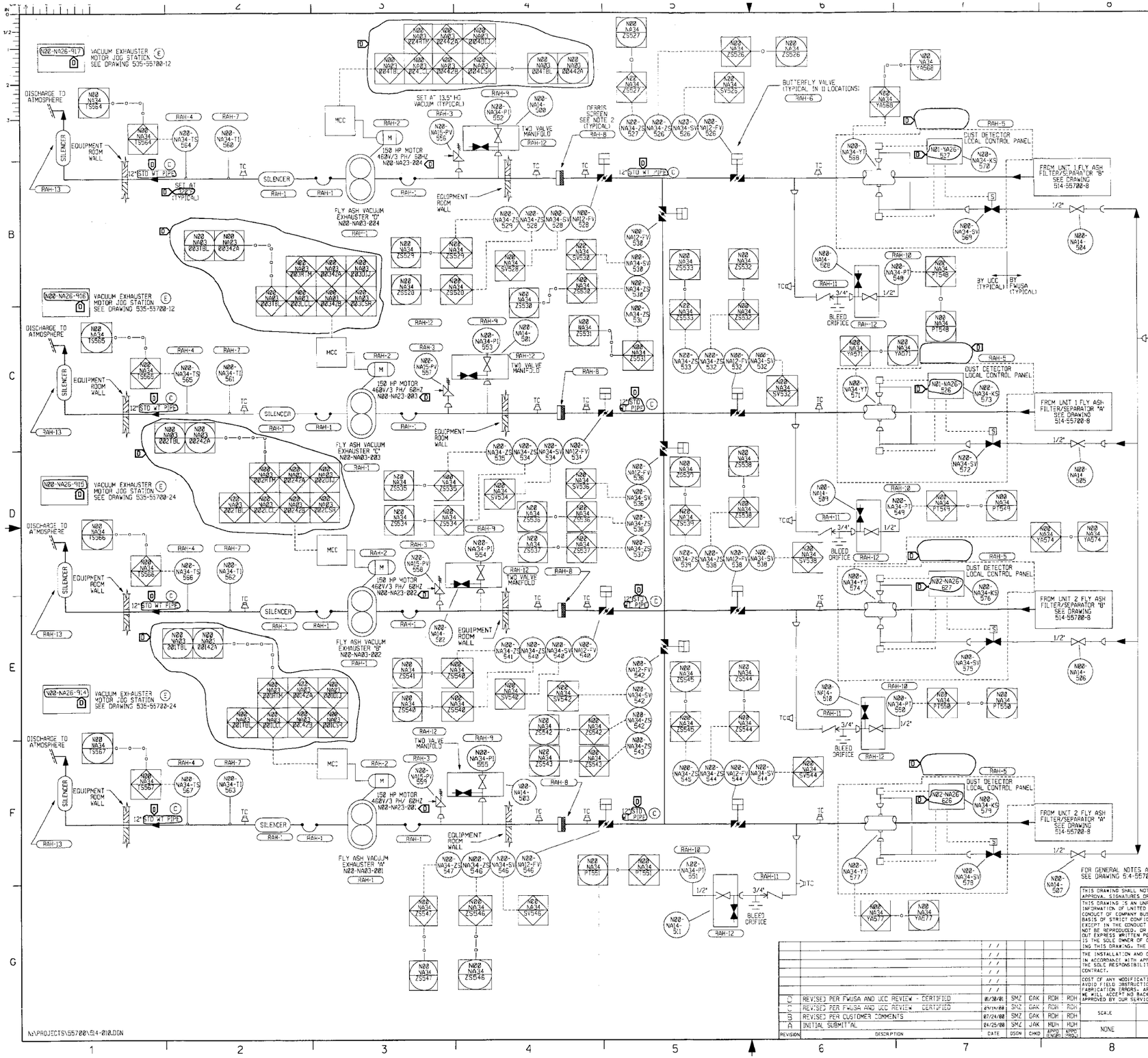


| ITEM NO. | DRAWING NUMBER | PART NUMBER | QTY | DESCRIPTION |
|---|---|---|---|---|
| RAH-1 | | 55700-214 | 4 | MECHANICAL EXHAUSTER, SIZED TO OPERATE AT 136.82 LB/MIN, 11.4" Hg VACUUM, INCLUDES 12" INLET EXPANSION JOINT, 12" DISCHARGE EXPANSION JOINT, 12" DISCHARGE SILENCER, JACKSHAFT V-BELT DRIVE AND COMMON BASE FOR EXHAUSTER AND MOTOR |
| RAH-2 | | 55700-215 | 4 | MOTOR, 150 HP, 460V, 3Ph, 60 Hz, TEFC, 1800 RPM, 1.15 SERVICE FACTOR |
| RAH-3 | 3-1957-22 | 1957-22-2 | 4 | 6" VACUUM RELIEF VALVE |
| RAH-4 | | 55700-246 | 4 | TEMPERATURE SWITCH, 100-400 DEGREES F, NEMA 4X |
| RAH-5 | 5-3207-126 | SK-55700-3207-126-1 | 4 | DUST DETECTOR, NEMA 4X W/ NUMATICS SOLENOID VALVE |
| RAH-6 | | 55700-218 | 11 | VALVE - BUTTERFLY, 12", AC OPER, N/C, FULLY ASSEMBLED WITH TWO NEMA 4X LIMIT SWITCHES AND NUMATICS SOLENOID AIR VALVE |
| RAH-7 | | 55700-219 | 4 | TEMPERATURE GAUGE, RANGE: 50-550°F |
| RAH-8 | | 326150-120 | 4 | STARTUP SCREEN, 12", 304 S.S. |
| RAH-9 | | 55700-245 | 4 | VACUUM GAUGE, 0-30" HG |
| RAH-10 | | 55700-220 | 4 | VACUUM TRANSMITTER, RANGE: 0 - 20" HG |
| RAH-11 | | 3531-21 | 4 | DUST CHECK ASSEMBLY |
| RAH-12 | | 55700-226 | 8 | MANIFOLD - 2 VALVE, 1/2" NPT FEMALE CONNECTION |
| RAH-13 | | 55700-217 | 4 | SILENCER - SECONDARY DISCHARGE |

NOTES:

1. REFER TO DRAWING 514-55700-11 FOR COMPRESSED AIR DIAPHRAGM AND REQUIREMENTS.

2. THE DEBRIS SCREEN SHOULD BE PERIODICALLY CLEANED DURING THE FIRST FEW HOURS OF OPERATION. REMOVAL OF SCREEN SHOULD OCCUR AFTER DANGER FROM DEBRIS IS OVER.

3. VACUUM TRANSMITTER SET POINTS:

FULL LOAD REGULATION:

INITIALLY SET AT THE FOLLOWING POINTS:

BAGHOUSE TO FLY ASH SILO, SET AT 11.4" Hg.
BAGHOUSE TO RECYCLE SILO, SET AT 7.3" Hg.
ECONOMIZER AND AIR HEATER TO FLY ASH SILO, SET AT 12.0" Hg.

NO LOAD SETTING:

SET AT 1" TO 1.5" Hg ABOVE MAXIMUM NO LOAD FOR THE SYSTEM.

PLUGGED HOPPER SETTING:

SET AT APPROXIMATELY 3" TO 4" Hg ABOVE MAXIMUM EMPTY LINE LOSS WITH ASH INTAKES CLOSED.

LOW CONVEYING AIR SETTING:

SET AT 0.5" Hg BELOW THE NO LOAD SETTING.

4. DO NOT MOUNT INSTRUMENTS ON THE EXHAUSTER, BASE OR PIPING.

5. RELIEF VALVE MUST BE SUPPORTED INDEPENDENTLY FROM CONVEYING PIPELINE, EXHAUSTER AND CONCRETE BASE.

6. ALL EXHAUSTER ACCESSORIES AND AIR PIPELINES UPSTREAM OF THE INLET EXPANSION JOINT AND DOWNSTREAM OF THE DISCHARGE EXPANSION JOINT MUST BE INDEPENDENTLY SUPPORTED, ALIGNED AND SECURED SO THAT NO FORCES ARE TRANSMITTED TO THE EXHAUSTER. ALL PIPING AND ACCESSORIES SHOULD BE SECURED FIRMLY SO THAT EXCESS VIBRATION DOES NOT DAMAGE THE INLET OR DISCHARGE EXPANSION JOINTS.

7. LOCATE DUST DETECTOR IN AN ACCESSIBLE LOCATION IN A STRAIGHT RUN OF PIPE, 10 PIPE DIAMETERS DOWNSTREAM OF ANY CHANGE OF DIRECTION.

8. DCS RECEIVES COMPOSITE MOTOR STATES "42A" WHICH IS DERIVED FROM MCC 42A AND 42B SIGNALS.

| REVISION | DESCRIPTION | DATE | DSGN | CHKD | APPD ENGR | APPD PROJ |
|---|---|---|---|---|---|---|
| D | REVISED PER FWUSA AND UCC REVIEW - CERTIFIED | 01/30/01 | SMZ | OAK | RDH | RDH |
| C | REVISED PER FWUSA AND UCC REVIEW - CERTIFIED | 01/19/01 | SMZ | OAK | RDH | RDH |
| B | REVISED PER CUSTOMER COMMENTS | 07/24/00 | SMZ | OAK | RDH | RDH |
| A | INITIAL SUBMITTAL | 04/25/00 | SMZ | JAK | MJH | MJH |

THIS DRAWING SHALL NOT BE CONSIDERED A CERTIFIED DOCUMENT UNLESS WRITTEN APPROVAL, SIGNATURES OR INITIALS ARE PRESENT.
THIS DRAWING IS AN UNPUBLISHED COPYRIGHTED WORK CONTAINING PROPRIETARY INFORMATION OF UNITED CONVEYOR CORPORATION, AND IS LOANED FOR USE IN THE CONDUCT OF COMPANY BUSINESS ONLY. THIS COPY HAS BEEN PROVIDED ON THE BASIS OF STRICT CONFIDENTIALITY AND WITH THE EXPRESS UNDERSTANDING THAT EXCEPT IN THE CONDUCT OF UNITED CONVEYOR CORPORATION BUSINESS, IT MAY NOT BE REPRODUCED, OR REVEALED TO ANY PERSON, IN WHOLE OR IN PART, WITHOUT EXPRESS WRITTEN PERMISSION FROM UNITED CONVEYOR CORPORATION, WHICH IS THE SOLE OWNER OF COPYRIGHT AND ALL OTHER RIGHTS THEREIN. BY RECEIVING THIS DRAWING, THE RECIPIENT AGREES TO RETURN IT UPON REQUEST.

THE INSTALLATION AND OPERATION OF UNITED CONVEYOR CORPORATION EQUIPMENT, IN ACCORDANCE WITH APPROVED PLANS AND OPERATING INSTRUCTIONS, SHALL BE THE SOLE RESPONSIBILITY OF THE PURCHASER, UNLESS OTHERWISE SPECIFIED BY CONTRACT.

COST OF ANY MODIFICATIONS TO UNITED CONVEYOR CORPORATION EQUIPMENT TO AVOID FIELD OBSTRUCTIONS, OR CORRECTIONS DUE TO MINOR DRAWING AND/OR FABRICATION ERRORS, ARE NOT CHARGEABLE TO UNITED CONVEYOR CORPORATION. WE WILL ACCEPT NO BACKCHARGES FOR ANY WORK PERFORMED IN THE FIELD UNLESS APPROVED BY OUR SERVICE GROUP (U.S. SERVICE CORPORATION) AT WAUKEGAN.

| SCALE | CONTRACT NUMBER | SUBSYSTEM | DRAWING LETTER IDENTIFICATION |
|---|---|---|---|
| NONE | 55700-01 | R | AH |

CENTRAL RECORDS
DATE 01/30/01

TAG NUMBERS N00-N600
FW CONTRACT 13-004600
FW REQN. NO. 4605-1801-A
FW ORDER NO. PP-2000-13-004600
FOR:
JEA
NORTHSIDE UNITS 1 & 2 REPOWERING PROJECT
JACKSONVILLE, FL

B & V DWG. NO. 62.1801.05 - C0012

DRAWING TITLE
P & I DIAGRAM
FLY ASH VACUUM EXHAUSTERS
UNITS 1 & 2

PLANT NAME
JACKSONVILLE ELECTRIC AUTHORITY
NORTHSIDE GENERATING STATION
JACKSONVILLE, FLORIDA

UNITED CONVEYOR CORPORATION
2100 NORMAN DRIVE WEST
WAUKEGAN, ILLINOIS 60085

DRAWING NUMBER: 514-55700-12
REVISION: 0

FORM 9820-09 04/97

N:\PROJECTS\55700\514-010.DGN

CRA33213 11-SEP-2002 14:01:58

P062713.62.1801.05-C0012 St:RD 02/28/01 MM-01592

CRA33213 11-SEP-2002 14:01:17

NOTES:
1. SEE DRAWING 514-55702-19 FOR COMPRESSED AIR DETAILS.
2. SEE DRAWING 514-55702-1 SHEET 2 FOR BILL OF MATERIAL AND HYDRAULIC CHAIN TENSIONER DETAILS.

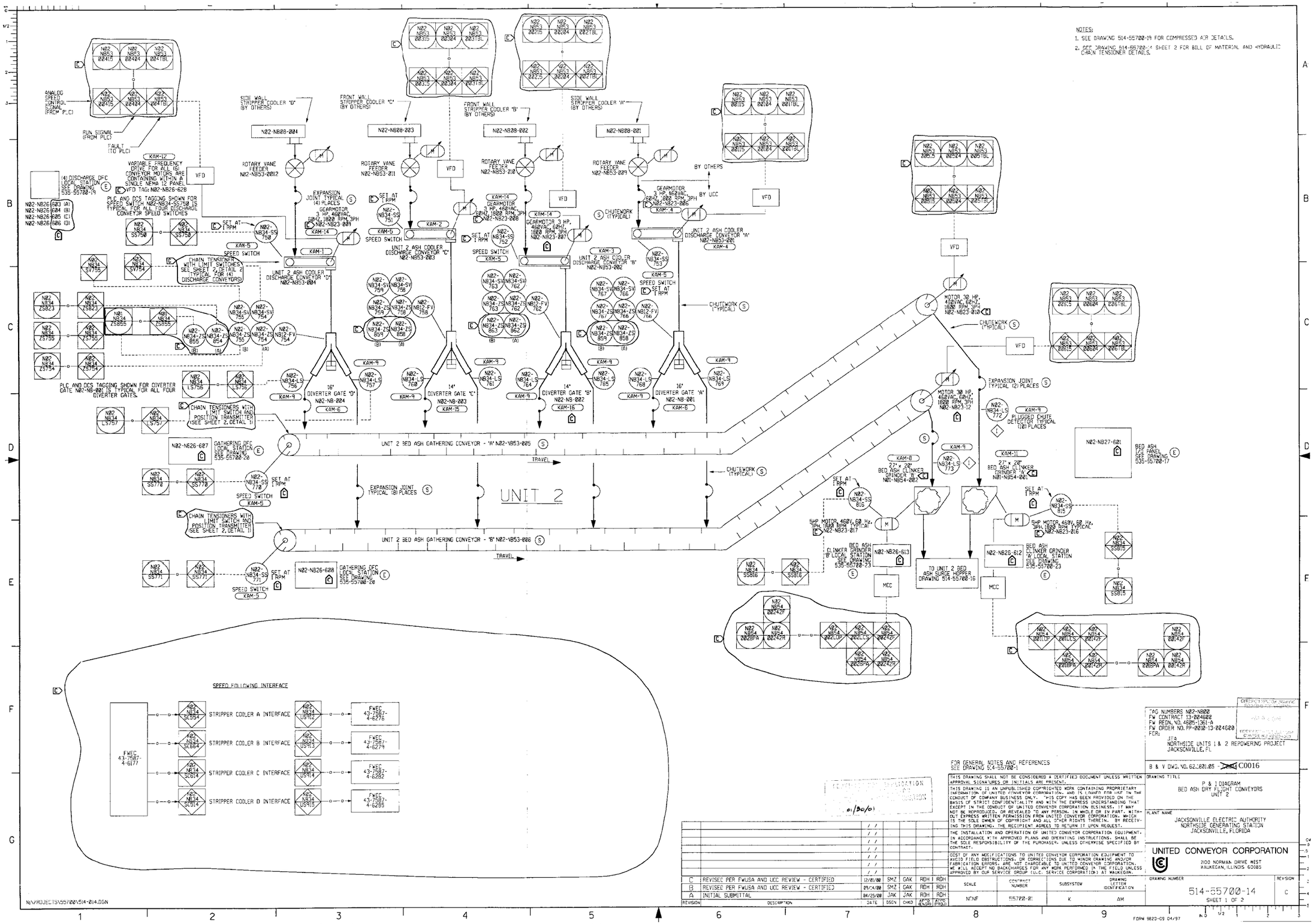


FOR GENERAL NOTES AND REFERENCES SEE DRAWING 514-55700-1

| REVISION | DESCRIPTION | DATE | DSGN | CHKD | APVD (ENGR) | APVD (PROJ) |
|---|---|---|---|---|---|---|
| C | REVISED PER FWUSA AND UCC REVIEW - CERTIFIED | 12/01/00 | SMZ | GAK | RDH | RDH |
| B | REVISED PER FWUSA AND UCC REVIEW - CERTIFIED | 05/24/00 | SMZ | GAK | RDH | RDH |
| A | INITIAL SUBMITTAL | 04/25/00 | JAK | JAK | RDH | RDH |

THIS DRAWING SHALL NOT BE CONSIDERED A CERTIFIED DOCUMENT UNLESS WRITTEN APPROVAL SIGNATURES OR INITIALS ARE PRESENT.

THIS DRAWING IS AN UNPUBLISHED COPYRIGHTED WORK CONTAINING PROPRIETARY INFORMATION OF UNITED CONVEYOR CORPORATION, AND IS LOANED FOR USE IN THE CONDUCT OF COMPANY BUSINESS ONLY. THIS COPY HAS BEEN PROVIDED ON THE BASIS OF STRICT CONFIDENTIALITY AND WITH THE EXPRESS UNDERSTANDING THAT EXCEPT IN THE CONDUCT OF UNITED CONVEYOR CORPORATION BUSINESS, IT MAY NOT BE REPRODUCED, OR REVEALED TO ANY PERSON, IN WHOLE OR IN PART, WITHOUT EXPRESS WRITTEN PERMISSION FROM UNITED CONVEYOR CORPORATION, WHICH IS THE SOLE OWNER OF COPYRIGHT AND ALL OTHER RIGHTS THEREIN. BY RECEIVING THIS DRAWING, THE RECIPIENT AGREES TO RETURN IT UPON REQUEST.

THE INSTALLATION AND OPERATION OF UNITED CONVEYOR CORPORATION EQUIPMENT, IN ACCORDANCE WITH APPROVED PLANS AND OPERATING INSTRUCTIONS, SHALL BE THE SOLE RESPONSIBILITY OF THE PURCHASER, UNLESS OTHERWISE SPECIFIED BY CONTRACT.

COST OF ANY MODIFICATIONS TO UNITED CONVEYOR CORPORATION EQUIPMENT TO AVOID FIELD OBSTRUCTIONS, OR CORRECTIONS DUE TO WINDR DRAWING AND/OR FABRICATION ERRORS, ARE NOT CHARGEABLE TO UNITED CONVEYOR CORPORATION. WE WILL ACCEPT NO BACKCHARGES FOR ANY WORK PERFORMED IN THE FIELD UNLESS APPROVED BY OUR SERVICE GROUP (U.C. SERVICE CORPORATION) AT WAUKEGAN.

| SCALE | CONTRACT NUMBER | SUBSYSTEM | DRAWING LETTER IDENTIFICATION |
|---|---|---|---|
| NONE | 55702-01 | K | AM |

"AG NUMBERS N02-N802
FW CONTRACT 13-024602
FW REQN. NO. 4626-1361-A
FW ORDER NO. PP-0010-13-024620
FCR:
FEA
NORTHSIDE UNITS 1 & 2 REPOWERING PROJECT
JACKSONVILLE, FL

B & V DWG. NO. 62.1801.05 - C0016

DRAWING TITLE
P & I DIAGRAM
BED ASH DRY FLIGHT CONVEYORS
UNIT 2

PLANT NAME
JACKSONVILLE ELECTRIC AUTHORITY
NORTHSIDE GENERATING STATION
JACKSONVILLE, FLORIDA

UNITED CONVEYOR CORPORATION
2100 NORMAN DRIVE WEST
WAUKEGAN, ILLINOIS 60085

DRAWING NUMBER 514-55700-14 SHEET 1 OF 2
REVISION C

FORM 9823-09 04/97

N:\PROJECTS\55700\514-014.DGN

P062713.62.1801.05-C0016 St:RD 02/28/01 MM-01592

CHAIN TENSIONER TAG TABLE

| CONVEYOR NAME | GATHERING CONVEYOR A | GATHERING CONVEYOR B | DISCHARGE CONVEYOR A | DISCHARGE CONVEYOR B | DISCHARGE CONVEYOR C | DISCHARGE CONVEYOR D |
|---|---|---|---|---|---|---|
| CONVEYOR TAG | N02-NB53-005 | N02-NB53-006 | N02-NB53-001 | N02-NB53-002 | N02-NB53-003 | N02-NB53-004 |
| WORN CHAIN LIMIT SWITCH (A) | N02-NB34-ZS900 | N02-NB34-ZS903 | N02-NB34-ZS908 | N02-NB34-ZS910 | N02-NB34-ZS913 | N02-NB34-ZS916 |
| WORN CHAIN LIMIT SWITCH (B) | - | - | N02-NB34-ZS907 | N02-NB34-ZS911 | N02-NB34-ZS914 | N02-NB34-ZS917 |
| HYDRAULIC POWER UNIT | N02-NB26-529 | N02-NB26-530 | - | - | - | - |
| LOW PRESSURE SWITCH | N02-NB34-PS902 | N02-NB34-PS905 | - | - | - | - |
| POSITION TRANSMITTER | N02-NB34-ZS901 | N02-NB34-ZS904 | - | - | - | - |
| MANUAL CONTROL VALVE | N02-NB14-900 | N02-NB14-901 | - | - | - | - |

C

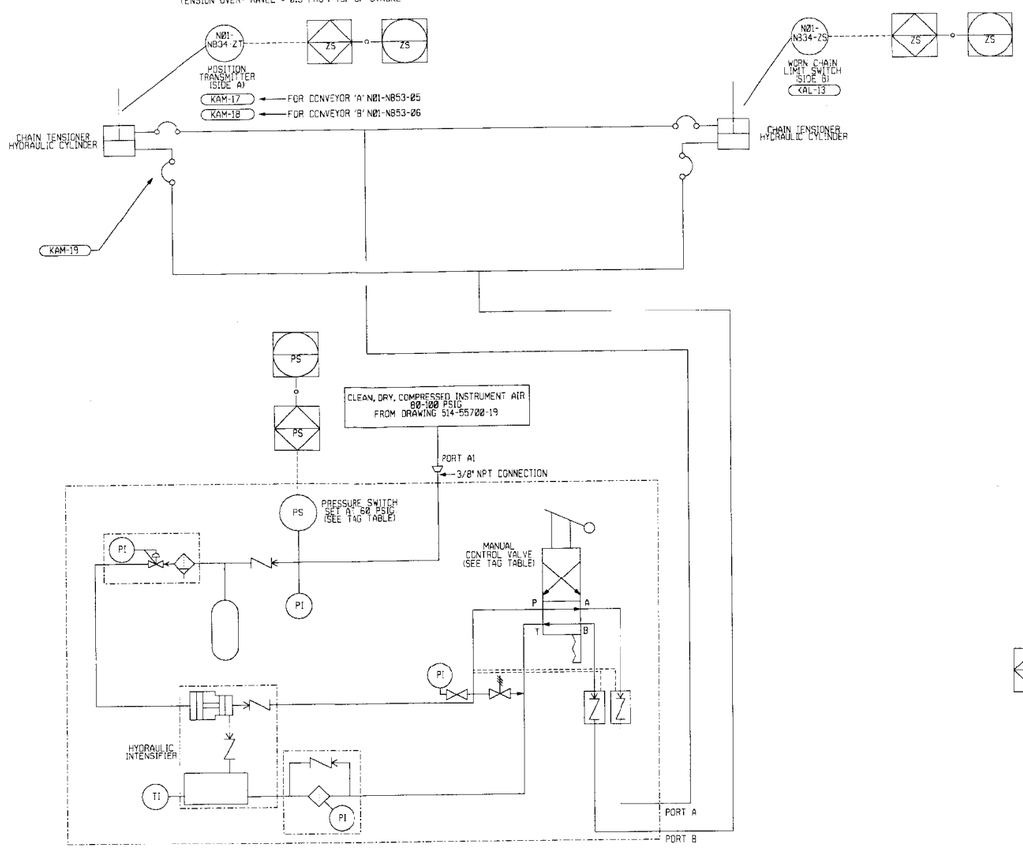


(2) BED ASH GATHERING DFC HYDRAULIC CHAIN TENSIONER UNIT (S)
(SUPPLIED ASSEMBLED)
DETAIL 1

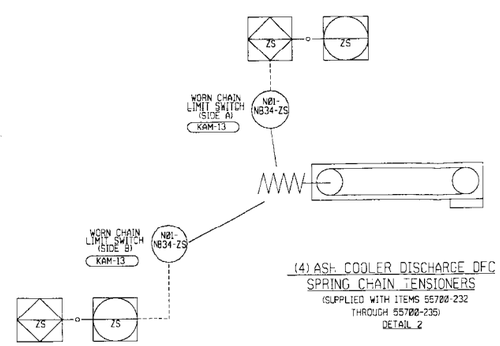


(4) ASH COOLER DISCHARGE DFC SPRING CHAIN TENSIONERS
(SUPPLIED WITH ITEMS 55700-232 THROUGH 55700-235)
DETAIL 2

| ITEM * ABC-N | DRAWING NUMBER | PART NUMBER | QTY | DESCRIPTION |
|---|---|---|---|---|
| KAM-1 | | 55700-232 | 1 | UNIT #2 ASH COOLER DISCHARGE CONVEYOR "A" |
| KAM-2 | | 55700-233 | 1 | UNIT #2 ASH COOLER DISCHARGE CONVEYOR "B" |
| KAM-3 | | 55700-234 | 1 | UNIT #2 ASH COOLER DISCHARGE CONVEYOR "C" |
| KAM-4 | | 55700-235 | 1 | UNIT #2 ASH COOLER DISCHARGE CONVEYOR "D" |
| KAM-5 | | 55700-240 | 6 | SPEED SWITCH |
| C KAM-6 | | 55700-201-1 | 2 | 16" DIVERTER GATE - 3 POSITION, A/C OPERATED, WITH NUMATICS SOLENOID VALVE AND NEMA 4X LIMIT SWITCHES. R.H. PNEUMATIC CYLINDER ARRANGEMENT |
| KAM-7 | | | | NOT USED |
| KAM-8 | 5-2112-364-1Z1 | 5-2112-364-1Z1-1 | 1 | 27" x 20" CRUSHER WITH ELECTRIC DRIVE RIGHT REAR MOUNTING ARRANGEMENT |
| C KAM-9 | 5-3505-804 | 5-3505-804-3 | 10 | PLUGGED CHUTE DETECTOR |
| KAM-10 | | | | NOT USED |
| KAM-11 | 5-2112-364-1Z1 | 5-2112-364-1Z1-2 | 1 | 27" x 20" CRUSHER WITH ELECTRIC DRIVE LEFT REAR MOUNTING ARRANGEMENT |
| C KAM-12 | | 55700-248 | 1 | ADJUSTABLE FREQUENCY DRIVE FOR (4) 3 HP MOTORS AND (2) 30 HP MOTORS LOCATED IN A NEMA 12 ENCLOSURE. |
| C KAM-13 | SK-3531-108 | 3531-108 | 5 | LIMIT SWITCH KIT (TWO SWITCHES), MICROSWITCH NEMA 4X |
| KAM-14 | | 55700-247 | 4 | GEARMOTOR ASSEMBLY 3HP, 460VAC, 60HZ, 3PH, 1800 RPM |
| C KAM-15 | | 55700-202-1 | 1 | 14" DIVERTER GATE - 3 POSITION, A/C OPERATED, WITH NUMATICS SOLENOID VALVE AND NEMA 4X LIMIT SWITCHES. R.H. PNEUMATIC CYLINDER ARRANGEMENT |
| C KAM-16 | | 55700-202-2 | 1 | 14" DIVERTER GATE - 3 POSITION, A/C OPERATED, WITH NUMATICS SOLENOID VALVE AND NEMA 4X LIMIT SWITCHES. L.H. PNEUMATIC CYLINDER ARRANGEMENT |
| C KAM-17 | 5-4902-3 | 4902-3-1 | 1 | TRANSMITTER - DFC TENSIONER 12" STROKE CYLINDER LOOP POWERED, RIGHT HAND. |
| C KAM-18 | 5-4902-3 | 4902-3-2 | 1 | TRANSMITTER - DFC TENSIONER 12" STROKE CYLINDER LOOP POWERED, LEFT HAND. |
| C KAM-19 | 5-4901-119 | 4901-119 | 2 | HYDRAULIC LINE ASSEMBLY - CHAIN TENSIONER |

NOTES: (CONTINUED FROM SHEET 1)

3. FOR GATHERING CONVEYORS, SIDE A REFERS TO TO THE SIDE OF THE CONVEYOR FACING AWAY FROM THE ADJACENT CONVEYOR. SIDE B REFERS TO THE SIDE FACING TOWARDS THE ADJACENT CONVEYOR.

4. FOR THE DISCHARGE CONVEYORS, SIDE A AND SIDE B IS ARBITRARY.

SEE SHEET 1 OF 2 FOR REVISION LIST.

| REVISION | DESCRIPTION | DATE | DSGN | CHKD | ENGD (ENGR) | APPD (PROJ) |
|---|---|---|---|---|---|---|

01/30/01

THIS DRAWING SHALL NOT BE CONSIDERED A CERTIFIED DOCUMENT UNLESS WRITTEN APPROVAL SIGNATURES OR INITIALS ARE PRESENT.
THIS DRAWING IS AN UNPUBLISHED COPYRIGHTED WORK CONTAINING PROPRIETARY INFORMATION OF UNITED CONVEYOR CORPORATION, AND IS LOANED FOR USE IN THE CONDUCT OF COMPANY BUSINESS ONLY. THIS COPY HAS BEEN PROVIDED ON THE BASIS OF STRICT CONFIDENTIALITY AND WITH THE EXPRESS UNDERSTANDING THAT EXCEPT IN THE CONDUCT OF UNITED CONVEYOR CORPORATION BUSINESS, IT MAY NOT BE REPRODUCED, OR REVEALED TO ANY PERSON, IN WHOLE OR IN PART, WITHOUT EXPRESS WRITTEN PERMISSION FROM UNITED CONVEYOR CORPORATION, WHICH IS THE SOLE OWNER OF COPYRIGHT AND ALL OTHER RIGHTS THEREIN. BY RECEIVING THIS DRAWING, THE RECIPIENT AGREES TO RETURN IT UPON REQUEST.
THE INSTALLATION AND OPERATION OF UNITED CONVEYOR CORPORATION EQUIPMENT, IN ACCORDANCE WITH APPROVED PLANS AND OPERATING INSTRUCTIONS, SHALL BE THE SOLE RESPONSIBILITY OF THE PURCHASER, UNLESS OTHERWISE SPECIFIED BY CONTRACT.
COST OF ANY MODIFICATIONS TO UNITED CONVEYOR CORPORATION EQUIPMENT TO AVOID FIELD OBSTRUCTIONS, OR CORRECTIONS DUE TO MINOR DRAWING AND/OR FABRICATION ERRORS, ARE NOT CHARGEABLE TO UNITED CONVEYOR CORPORATION. WE WILL ACCEPT NO BACKCHARGES FOR ANY WORK PERFORMED IN THE FIELD UNLESS APPROVED BY OUR SERVICE GROUP (U.C. SERVICE CORPORATION) AT WAUKEGAN.

| SCALE | CONTRACT NUMBER | SUBSYSTEM | DRAWING LETTER IDENTIFICATION |
|---|---|---|---|
| NONE | 55700-01 | K | AM |

TAG NUMBERS N02-N900
FW CONTRACT 13-024600
FW REQN. NO. 4905-1361-A
FW ORDER NO. PP-0010-13-024600
FOR:
JEA
NORTHSIDE UNITS 1 & 2 REPOWERING PROJECT
JACKSONVILLE, FL

B & V DWG. NO. 62.1801.05 - C0052

DRAWING TITLE
P & I DIAGRAM
BED ASH DRY FLIGHT CONVEYORS
UNIT 2

PLANT NAME
JACKSONVILLE ELECTRIC AUTHORITY
NORTHSIDE GENERATING STATION
JACKSONVILLE, FLORIDA

UNITED CONVEYOR CORPORATION
2100 NORMAN DRIVE WEST
WAUKEGAN, ILLINOIS 60085

DRAWING NUMBER 514-55700-14 SHEET 2 OF 2
REVISION C

FORM 3820-09 04/97

CRA33213 11-SEP-2002 14:14:01

P062713.62.1801.05-C0052 St:RD 02/28/01 MM-01592

CRA33213 11-SEP-2002 14:00:38

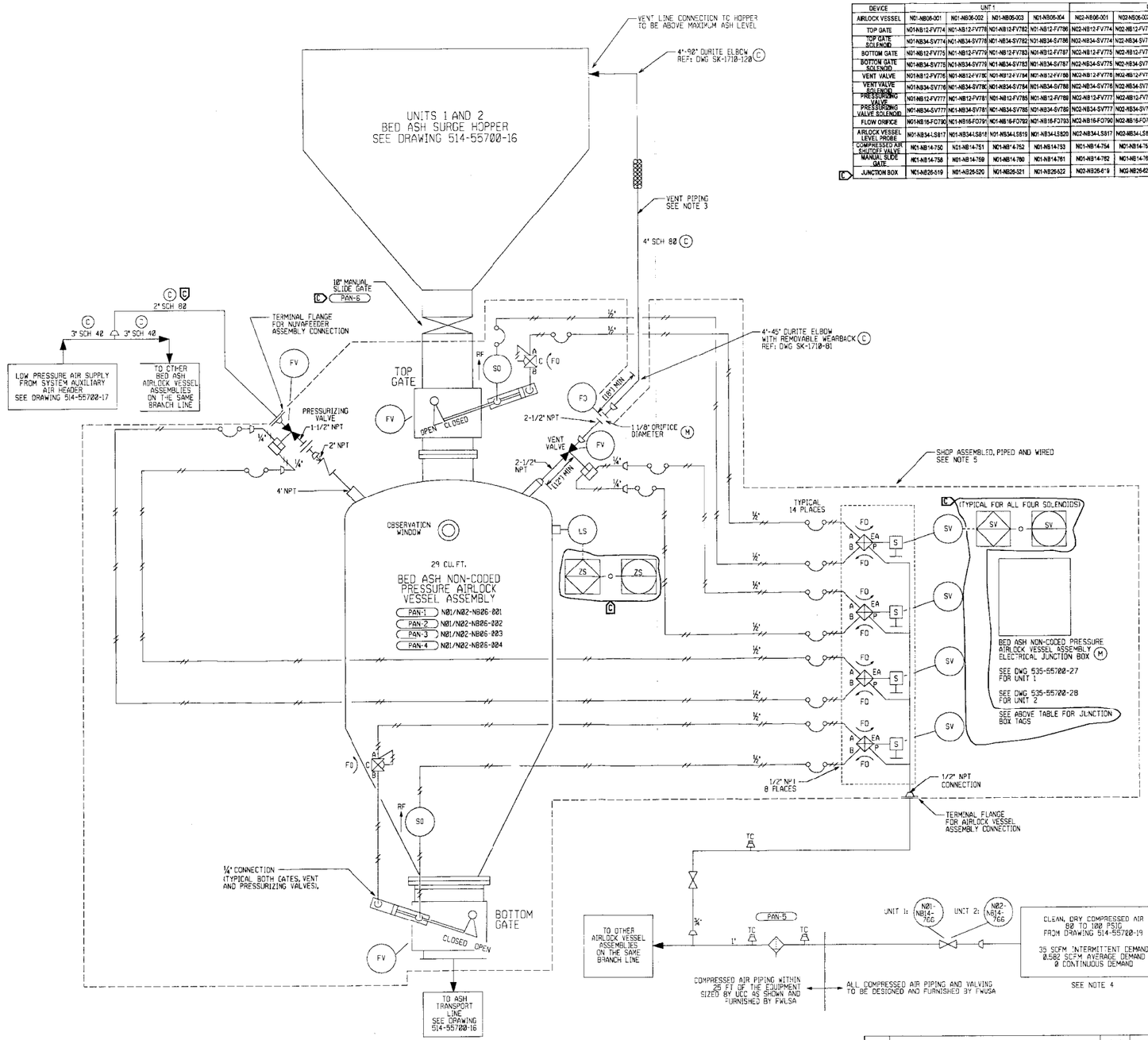


TYPICAL UNITS 1 AND 2 BED ASH NON-CODED PRESSURE AIRLOCK VESSEL ASSEMBLIES

TOTAL QUANTITY OF (8) AIRLOCK VESSEL ASSEMBLIES

| DEVICE | UNIT 1 | | | | UNIT 2 | | | |
|---|---|---|---|---|---|---|---|---|
| AIRLOCK VESSEL | N01-NB06-001 | N01-NB06-002 | N01-NB06-003 | N01-NB06-004 | N02-NB06-001 | N02-NB06-002 | N02-NB06-003 | N02-NB06-004 |
| TOP GATE | N01-NB12-FV774 | N01-NB12-FV778 | N01-NB12-FV782 | N01-NB12-FV786 | N02-NB12-FV774 | N02-NB12-FV778 | N02-NB12-FV782 | N02-NB12-FV786 |
| TOP GATE SOLENOID | N01-NB34-SV774 | N01-NB34-SV778 | N01-NB34-SV782 | N01-NB34-SV786 | N02-NB34-SV774 | N02-NB34-SV778 | N02-NB34-SV782 | N02-NB34-SV786 |
| BOTTOM GATE | N01-NB12-FV775 | N01-NB12-FV779 | N01-NB12-FV783 | N01-NB12-FV787 | N02-NB12-FV775 | N02-NB12-FV779 | N02-NB12-FV783 | N02-NB12-FV787 |
| BOTTOM GATE SOLENOID | N01-NB34-SV775 | N01-NB34-SV779 | N01-NB34-SV783 | N01-NB34-SV787 | N02-NB34-SV775 | N02-NB34-SV779 | N02-NB34-SV783 | N02-NB34-SV787 |
| VENT VALVE | N01-NB12-FV776 | N01-NB12-FV780 | N01-NB12-FV784 | N01-NB12-FV788 | N02-NB12-FV776 | N02-NB12-FV780 | N02-NB12-FV784 | N02-NB12-FV788 |
| VENT VALVE SOLENOID | N01-NB34-SV776 | N01-NB34-SV780 | N01-NB34-SV784 | N01-NB34-SV788 | N02-NB34-SV776 | N02-NB34-SV780 | N02-NB34-SV784 | N02-NB34-SV788 |
| PRESSURIZING VALVE | N01-NB12-FV777 | N01-NB12-FV781 | N01-NB12-FV785 | N01-NB12-FV789 | N02-NB12-FV777 | N02-NB12-FV781 | N02-NB12-FV785 | N02-NB12-FV789 |
| PRESSURIZING VALVE SOLENOID | N01-NB34-SV777 | N01-NB34-SV781 | N01-NB34-SV785 | N01-NB34-SV789 | N02-NB34-SV777 | N02-NB34-SV781 | N02-NB34-SV785 | N02-NB34-SV789 |
| FLOW ORIFICE | N01-NB16-FO790 | N01-NB16-FO791 | N01-NB16-FO792 | N01-NB16-FO793 | N02-NB16-FO790 | N02-NB16-FO791 | N02-NB16-FO792 | N02-NB16-FO793 |
| AIRLOCK VESSEL LEVEL PROBE | N01-NB34-LS817 | N01-NB34-LS818 | N01-NB34-LS819 | N01-NB34-LS820 | N02-NB34-LS817 | N02-NB34-LS818 | N02-NB34-LS819 | N02-NB34-LS820 |
| COMPRESSED AIR SHUTOFF VALVE | N01-NB14-750 | N01-NB14-751 | N01-NB14-752 | N01-NB14-753 | N01-NB14-754 | N01-NB14-755 | N01-NB14-756 | N01-NB14-757 |
| MANUAL SLIDE GATE | N01-NB14-758 | N01-NB14-759 | N01-NB14-760 | N01-NB14-761 | N01-NB14-762 | N01-NB14-763 | N01-NB14-764 | N01-NB14-765 |
| (C) JUNCTION BOX | N01-NB26-519 | N01-NB26-520 | N01-NB26-521 | N01-NB26-522 | N02-NB26-519 | N02-NB26-520 | N02-NB26-521 | N02-NB26-522 |

| ITEM * ASC-N | DRAWING NUMBER | PART NUMBER | QTY | DESCRIPTION |
|---|---|---|---|---|
| PAN-1 | 5-1527-111 | 5-1527-111-1 | 2 | BED ASH NON-CODED PRESSURE AIRLOCK VESSEL ASSEMBLY - 48" DIA, 29 CU FT CAPACITY PRE-PIPED, PRE-WIRED AND SHIPPED ASSEMBLED |
| PAN-2 | 5-1527-111 | 5-1527-111-2 | 2 | BED ASH NON-CODED PRESSURE AIRLOCK VESSEL ASSEMBLY - 48" DIA, 29 CU FT CAPACITY PRE-PIPED, PRE-WIRED AND SHIPPED ASSEMBLED |
| PAN-3 | 5-1527-111 | 5-1527-111-3 | 2 | BED ASH NON-CODED PRESSURE AIRLOCK VESSEL ASSEMBLY - 48" DIA, 29 CU FT CAPACITY PRE-PIPED, PRE-WIRED AND SHIPPED ASSEMBLED |
| PAN-4 | 5-1527-111 | 5-1527-111-4 | 2 | BED ASH NON-CODED PRESSURE AIRLOCK VESSEL ASSEMBLY - 48" DIA, 29 CU FT CAPACITY PRE-PIPED, PRE-WIRED AND SHIPPED ASSEMBLED |
| PAN-5 | SK-4411-27 | 44324-10 | 4 | 1" AIR FILTER |
| (C) PAN-6 | 210-557700-1 | B/M | 8 | GATE - ASSEMBLY - 10" ISOLATION W/ 3/4" PL TO 1/2" PL CONNECTION |

NOTE: QUANTITY SHOWN IS FOR BOTH UNITS 1 AND 2.

NOTES:

1. THIS DRAWING IS A SCHEMATIC DIAGRAM ONLY. IT SHOWS THE GENERAL ARRANGEMENT AND ROUTING OF THE CONTROL PIPING FOR ONE NUVA FEEDER.
2. THE INDIVIDUAL AIR LINES FOR EACH FEEDER ARE TO BE TAKEN OFF OF THE TOP OF THE SUPPLY HEADERS. THE LOW PRESSURE HEADER IS TO BE PITCHED DOWNWARD IN THE DIRECTION OF FLOW AT 1/4" PER 12' AND IS TO BE PROVIDED WITH A DRIP LEG AT THE END ALONG WITH A TRAP OR DRAIN VALVE.
3. RUN VENT PIPING AS DIRECT AS POSSIBLE WITH NO SECTIONS AT LESS THAN A 45 DEGREE SLOPE. PROVIDE WEAR RESISTANT FITTINGS AT ALL BENDS AND INSULATE TO A MINIMUM "R" FACTOR OF 6 TO PREVENT CONDENSATION.
4. AIR DEMAND IS BASED ON OPERATING ONE BRANCH LINE OF TWO ASSEMBLIES AT A TIME.
5. EQUIPMENT WITHIN THE DASHED LINE IS SHOP ASSEMBLED, PIPED AND WIRED.

| REVISION | DESCRIPTION | DATE | DRN | CHKD | APPD (ENGR) | APPD (PROJ) |
|---|---|---|---|---|---|---|
| C | REVISED PER FWUSA AND UCC REVIEW - CERTIFIED | 01/30/01 | SMZ | GAK | RDH | RDH |
| B | REVISED PER FWUSA AND UCC REVIEW - CERTIFIED | 05/13/00 | SMZ | KLM | RDH | RDH |
| A | INITIAL SUBMITTAL | 04/25/00 | JAK | JAK | RDH | RDH |

N:\PROJECTS\55700\514-015.DGN

FOR GENERAL NOTES AND REFERENCES SEE DRAWING 514-55700-1

THIS DRAWING SHALL NOT BE CONSIDERED A CERTIFIED DOCUMENT UNLESS WRITTEN APPROVAL SIGNATURES OR INITIALS ARE PRESENT.

THIS DRAWING IS AN UNPUBLISHED COPYRIGHTED WORK CONTAINING PROPRIETARY INFORMATION OF UNITED CONVEYOR CORPORATION, AND IS LOANED FOR USE IN THE CONDUCT OF COMPANY BUSINESS ONLY. THIS COPY HAS BEEN PROVIDED ON THE BASIS OF STRICT CONFIDENTIALITY AND WITH THE EXPRESS UNDERSTANDING THAT EXCEPT IN THE CONDUCT OF UNITED CONVEYOR CORPORATION BUSINESS, IT MAY NOT BE REPRODUCED, OR REVEALED TO ANY PERSON, IN WHOLE OR IN PART, WITHOUT EXPRESS WRITTEN PERMISSION FROM UNITED CONVEYOR CORPORATION, WHICH IS THE SOLE OWNER OF COPYRIGHT AND ALL OTHER RIGHTS THEREIN. BY RECEIVING THIS DRAWING, THE RECIPIENT AGREES TO RETURN IT UPON REQUEST.

THE INSTALLATION AND OPERATION OF UNITED CONVEYOR CORPORATION EQUIPMENT, IN ACCORDANCE WITH APPROVED PLANS AND OPERATING INSTRUCTIONS, SHALL BE THE SOLE RESPONSIBILITY OF THE PURCHASER, UNLESS OTHERWISE SPECIFIED BY CONTRACT.

COST OF ANY MODIFICATIONS TO UNITED CONVEYOR CORPORATION EQUIPMENT TO AVOID FIELD OBSTRUCTIONS, OR CORRECTIONS DUE TO MINOR DRAWING AND/OR FABRICATION ERRORS, ARE NOT CHARGEABLE TO UNITED CONVEYOR CORPORATION. WE WILL ACCEPT NO BACKCHARGES FOR ANY WORK PERFORMED IN THE FIELD UNLESS APPROVED BY OUR SERVICE GROUP (U.C. SERVICE CORPORATION) AT WAUKEGAN.

| SCALE | CONTRACT NUMBER | SUBSYSTEM | DRAWING LETTER IDENTIFICATION |
|---|---|---|---|
| NONE | 55700-01 | P | AN |

TAG NUMBERS N00-N800
FW CONTRACT 13-004600
FW REQN. NO. 4605-1361-A
FW ORDER NO. PP-2002-13-004600
FOR:
JEA
NORTHSIDE UNITS 1 & 2 REPOWERING PROJECT
JACKSONVILLE, FL

B & V DWG. NO. 62.1801.05 - C0017

DRAWING TITLE
P & I DIAGRAM
BOA ASH PRESSURE AIR
LOCK VESSEL ASSEMBLIES
UNITS 1 & 2

PLANT NAME
JACKSONVILLE ELECTRIC AUTHORITY
NORTHSIDE GENERATING STATION
JACKSONVILLE, FLORIDA

UNITED CONVEYOR CORPORATION
2100 NORMAN DRIVE WEST
WAUKEGAN, ILLINOIS 60085

DRAWING NUMBER: 514-55700-15
REVISION: C

FORM 9820-09 04/97

P062713.62.1801.05-C0017 St:RD 02/28/01 MM-01592

CRA33213 11-SEP-2002 13:59:49

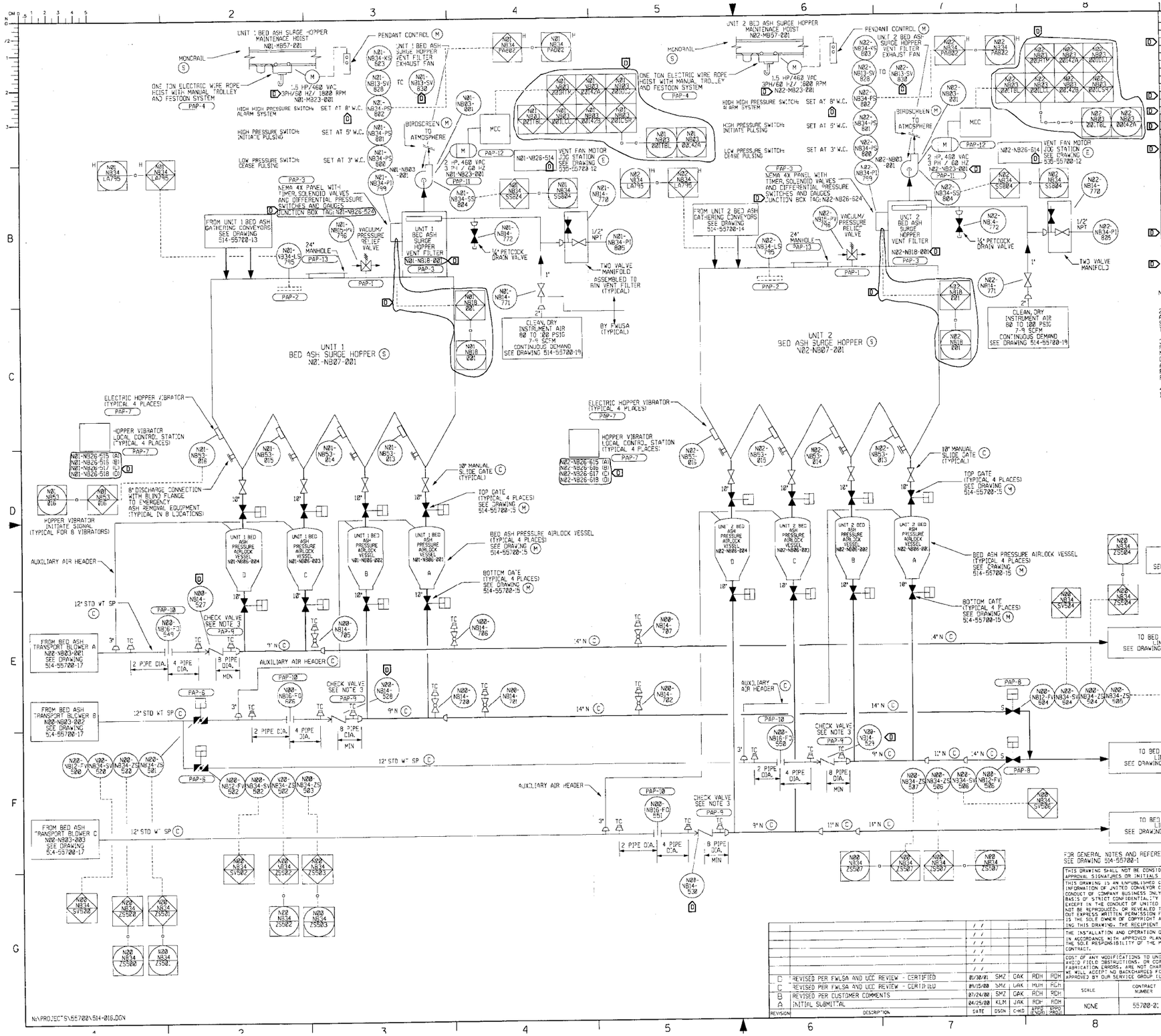


| ITEM* ABC.N | DRAWING NUMBER | PART NUMBER | QTY | DESCRIPTION |
|---|---|---|---|---|
| PAP-1 | 3-1957-32 | 1957-32-3 | 2 | VALVE - VACUUM/PRESSURE RELIEF VENT |
| PAP-2 | SK-3403-106 | SK-3403-106-1 | 2 | HIGH LEVEL INDICATOR, PADDLE WHEEL, DIM "A" = 20" |
| PAP-3 | | 55700-208 | 2 | SILO VENT FILTER WITH VENT FAN, DUCT WORK DISCHARGE DAMPER, PRESSURE GAUGE, TWO VALVE MANIFOLD, PETCOCK DRAIN VALVE, INSTRUMENT AIR SHUTOFF VALVE AND TIMER |
| PAP-4 | | 55700-204 | 2 | HOIST - ELECTRIC WIRE ROPE, ONE TON CAPACITY |
| PAP-5 | | | | NOT USED |
| PAP-6 | | 55700-221 | 2 | VALVE - BUTTERFLY, 12" AC OPER, FULLY ASSEMBLED WITH TWO LIMIT SWITCHES AND NUMATICS SOLENOID AIR VALVE |
| PAP-7 | | 55700-203 | 9 | HOPPER VIBRATOR, 115 V - 1PH-60HZ WITH OPERATORS, CONTROL STATION - NEMA 4X |
| PAP-8 | S-1918-3 | SK-55700-1918-3-S | 2 | VALVE - KNIFE GATE, 14" 40D, AIR CYLINDER OPERATED WITH TWO NEMA 4X LIMIT SWITCHES AND NUMATICS SOLENOID AIR VALVE, FULLY ASSEMBLED. |
| PAP-9 | | 190238-4 | 4 | 12" CHECK VALVE |
| PAP-10 | | 403419-7500 | 4 | 12" ORIFICE PLACE WITH 7 1/2" DIAMETER ORIFICE |
| PAP-11 | | 55700-240 | 2 | UNDERSPEED SWITCH |
| PAP-12 | | 55700-252 | 2 | MOTOR - 2 HP, 3600 RPM, 460V-3PH-60HZ, 1.15 S.F. |
| PAP-13 | | 55700-254 | 2 | MANWAY, HINGED, 24" DIAMETER |

NOTE: QUANTITIES SHOWN ARE FOR BOTH UNITS 1 & 2.

NOTES:
1. SEE DRAWING 514-55700-19 FOR COMPRESSED AIR DETAILS.

2. PULSE ON DEMAND CLEANING REQUIRES THREE DIFFERENTIAL PRESSURE SWITCH SETPOINTS: A HIGH PRESSURE SWITCH SETPOINT TO INITIATE PULSE CLEANING, A LOW PRESSURE SWITCH SETPOINT TO CEASE PULSE CLEANING, AND A HIGH HIGH PRESSURE SWITCH SETPOINT TO ALARM THE DCS SYSTEM. RECOMMENDED SETPOINTS ARE SHOWN AND FIELD ADJUSTABLE.

3. THE ORIFICE, TEST CONNECTIONS, AND CHECK VALVE MUST BE LOCATED IN A HORIZONTAL RUN OF "HPC" AT THE APPROXIMATE LOCATIONS SHOWN ON THIS DRAWING. THE CHECK VALVE MUST BE INSTALLED WITH ITS SHAFT IN THE VERTICAL POSITION AND LOCATED 8 PIPE DIAMETERS UPSTREAM FROM THE NEAREST NUVAFEEDER INTAKE. IF THE ACTUAL PIPING ARRANGEMENT PREVENTS THIS, LOCATE THE ORIFICE, TEST CONNECTIONS, AND CHECK VALVE AS FAR AWAY FROM THE NUVAFEEDER INTAKE AS POSSIBLE, WHILE MAINTAINING THE REMAINING PIPE DIAMETER CRITERIA AS CLOSELY AS POSSIBLE.

4. THE LETTER "S" ADJACENT TO A GATE DENOTES THE SEAT SIDE OF THE GATE FOR PROPER INSTALLATION ORIENTATION.

FOR GENERAL NOTES AND REFERENCES SEE DRAWING 514-55700-1

THIS DRAWING SHALL NOT BE CONSIDERED A CERTIFIED DOCUMENT UNLESS WRITTEN APPROVAL SIGNATURES OR INITIALS ARE PRESENT.

THIS DRAWING IS AN UNPUBLISHED COPYRIGHTED WORK CONTAINING PROPRIETARY INFORMATION OF UNITED CONVEYOR CORPORATION, AND IS LOANED FOR USE IN THE CONDUCT OF COMPANY BUSINESS ONLY. THIS COPY HAS BEEN PROVIDED ON THE BASIS OF STRICT CONFIDENTIALITY AND WITH THE EXPRESS UNDERSTANDING THAT EXCEPT IN THE CONDUCT OF UNITED CONVEYOR CORPORATION BUSINESS, IT MAY NOT BE REPRODUCED OR REVEALED TO ANY PERSON, IN WHOLE OR IN PART, WITHOUT EXPRESS WRITTEN PERMISSION FROM UNITED CONVEYOR CORPORATION, WHICH IS THE SOLE OWNER OF COPYRIGHT AND ALL OTHER RIGHTS THEREIN. BY RECEIVING THIS DRAWING, THE RECIPIENT AGREES TO RETURN IT UPON REQUEST.

THE INSTALLATION AND OPERATION OF UNITED CONVEYOR CORPORATION EQUIPMENT, IN ACCORDANCE WITH APPROVED PLANS AND OPERATING INSTRUCTIONS, SHALL BE THE SOLE RESPONSIBILITY OF THE PURCHASER, UNLESS OTHERWISE SPECIFIED BY CONTRACT.

COST OF ANY MODIFICATIONS TO UNITED CONVEYOR CORPORATION EQUIPMENT TO AVOID FIELD OBSTRUCTIONS, OR CORRECTIONS DUE TO MINOR DRAWING AND/OR FABRICATION ERRORS, ARE NOT CHARGEABLE TO UNITED CONVEYOR CORPORATION. WE WILL ACCEPT NO BACKCHARGES FOR ANY WORK PERFORMED IN THE FIELD UNLESS APPROVED BY OUR SERVICE GROUP (U.C. SERVICE CORPORATION) AT WAUKEGAN.

| REVISION | DESCRIPTION | DATE | DSGN | CHKD | APPD (ENGR) | APPD (PROJ) |
|---|---|---|---|---|---|---|
| D | REVISED PER FWUSA AND UCC REVIEW - CERTIFIED | 01/30/01 | SMZ | OAK | RDH | RDH |
| C | REVISED PER FWUSA AND UCC REVIEW - CERTIFIED | 09/15/00 | SMZ | OAK | MJH | RDH |
| B | REVISED PER CUSTOMER COMMENTS | 07/24/00 | SMZ | OAK | RDH | RDH |
| A | INITIAL SUBMITTAL | 04/25/00 | KLM | JAK | RDH | RDH |

| SCALE | CONTRACT NUMBER | SUBSYSTEM | DRAWING LETTER IDENTIFICATION |
|---|---|---|---|
| NONE | 55700-2 | P | AP |

TAG NUMBERS N00-N900
FW CONTRACT 13-004600
FW REQN. NO. 4605-1161-A
FW ORDER NO. PP-002-2-13-004600
FOR:
JEA
NORTHSIDE UNITS 1 & 2 REPOWERING PROJECT
JACKSONVILLE, FL

B & V DWG. NO. 62.1801-05 - C0018

DRAWING TITLE
P & I DIAGRAM
BED ASH PRESSURE SYSTEM
UNITS 1 & 2

PLANT NAME
JACKSONVILLE ELECTRIC AUTHORITY
NORTHSIDE GENERATING STATION
JACKSONVILLE, FLORIDA

UNITED CONVEYOR CORPORATION
2100 NORMAN DRIVE WEST
WAUKEGAN, ILLINOIS 60085

DRAWING NUMBER: 514-55700-16
REVISION: D

DRAWING TITLE

FORM 9820-09 04/97

P062713.62.1801.05-C0018 St:RD 02/28/01 MM-01592

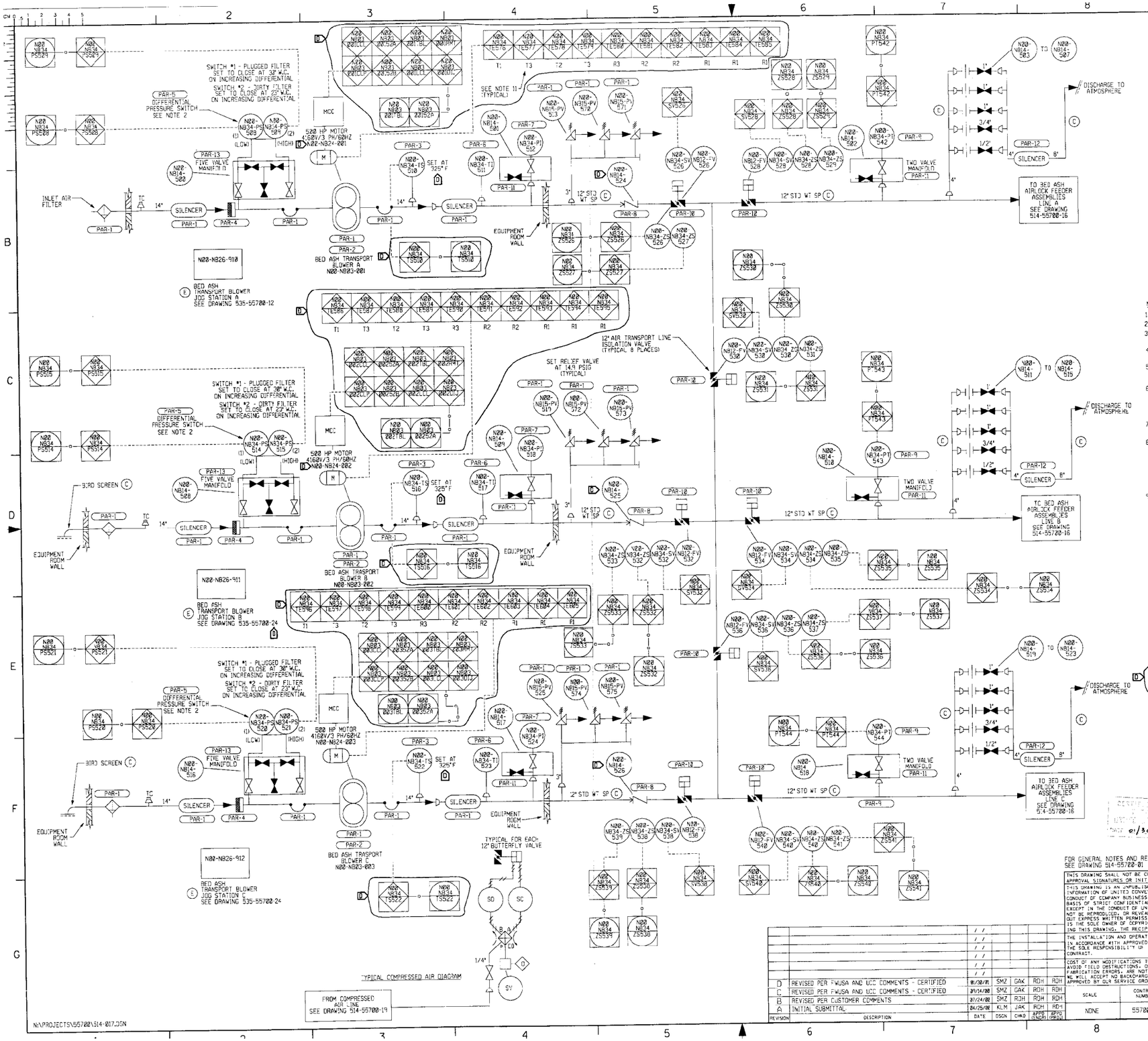


| ITEM * ABC/A | DRAWING NUMBER | PART NUMBER | QTY | DESCRIPTION |
|---|---|---|---|---|
| PAR-1 | | 55700-207 | 3 | BLOWER, POSITIVE DISPLACEMENT, DIRECT DRIVE WITH BASE SIZED TO OPERATE AT 1185 RPM, 425 LB/MIN, 13.5 PSIG FULLY ASSEMBLED WITH (3) PRESSURE RELIEF VALVES, INLET AND DISCHARGE EXPANSION JOINTS, INLET AND DISCHARGE SILENCERS INLET AIR FILTER AND DRIVE COUPLING |
| PAR-2 | | 55700-208 | 3 | MOTOR 500 HP, 1200 RPM, 4000 VOLTS/3 PH/60 HZ, 1.15 S.F. |
| PAR-3 | | 55700-246 | 3 | TEMPERATURE SWITCH, 100-400 DEGREES F, NEMA 4X |
| PAR-4 | | 326150-140 | 3 | 14" DEBRIS SCREEN |
| PAR-5 | | 55700-241 | 3 | DIFFERENTIAL PRESSURE SWITCH, DUAL 1-80" W.C.D. NEMA 4X |
| PAR-6 | | 55700-219 | 3 | TEMPERATURE GAUGE, 50-550°F |
| PAR-7 | | 55700-242 | 3 | PRESSURE GAUGE, 0 #30 psig |
| PAR-8 | | 190238-4 | 3 | 12" CHECK VALVE |
| PAR-9 | | 55700-243 | 3 | PRESSURE TRANSMITTER |
| PAR-10 | | 55700-221 | 8 | VALVE - BUTTERFLY, 12", AC OPER, FULLY ASSEMBLED WITH TWO NEMA 4X LIMIT SWITCHES AND NUMATICS SOLENOID AIR VALVE |
| PAR-11 | | 55700-226 | 6 | MANIFOLD - 2 VALVE, 1/2" NPT FEMALE CONNECTION |
| PAR-12 | | 55700-253 | 3 | SILENCER - VENT, BLEED AIR, 8" OUTLET, 4" INLET |
| PAR-13 | | 55700-227 | 3 | MANIFOLD - 5 VALVE, 1/2" TUBE CONNECTION |

NOTE: QUANTITIES SHOWN ARE FOR BOTH UNITS 1 & 2.

NOTES:

1. INCREASE INLET PIPE DIAMETER TO THE NEXT LARGER SIZE, EVERY 15 FEET OF LENGTH.
2. DO NOT MOUNT INSTRUMENTS ON THE BLOWER, BASE OR PIPING.
3. RELIEF VALVE MUST BE SUPPORTED INDEPENDENTLY FROM PRESSURE CONVEYING PIPELINE, BLOWER AND CONCRETE BASE.
4. HIGH PRESSURE AIR PIPING FROM PRESSURE RELIEF VALVE MUST BE VENTED TO ATMOSPHERE AWAY FROM PERSONNEL.
5. THE DEBRIS SCREEN SHOULD BE PERIODICALLY CLEANED DURING THE FIRST FEW HOURS OF OPERATION. REMOVAL OF SCREEN SHOULD OCCUR AFTER DANGER FROM DEBRIS IS OVER.
6. ALL BLOWER ACCESSORIES AND AIR PIPELINES UPSTREAM OF THE "INLET" EXPANSION JOINT AND DOWNSTREAM OF THE DISCHARGE EXPANSION JOINT MUST BE INDEPENDENTLY SUPPORTED, ALIGNED AND SECURED SO THAT NO FORCES ARE TRANSMITTED TO THE BLOWER. ALL PIPING AND ACCESSORIES SHOULD BE SECURED FIRMLY SO THAT EXCESS VIBRATION DOES NOT DAMAGE THE INLET OR DISCHARGE EXPANSION JOINTS.
7. THE RELIEF VALVE MUST BE LOCATED A MINIMUM OF 8 PIPE DIAMETERS DOWNSTREAM OF THE DISCHARGE SILENCER OUTLET.
8. THE SOUND PRESSURE LEVEL OF EQUIPMENT SUPPLIED BY UCC WAS DETERMINED ON A TEST STAND OR AT AN ACTUAL INSTALLATION AND CORRECTED FOR BACKGROUND NOISE VALUES QUOTED AS MEETING CONTRACT SPECIFICATIONS IN NO WAY IMPLY A GUARANTEED INSTALLED SOUND PRESSURE LEVEL DUE TO MANY VARIABLES OF WHICH UCC HAS NO KNOWLEDGE AND OVER WHICH UCC HAS NO CONTROL. SOUND PRESSURE LEVELS ARE DEPENDENT ON THE AMBIENT CONDITIONS SUCH AS THE DISTANCE OF THE EQUIPMENT FROM ADJACENT WALLS, NOISE REFLECTIVE PROPERTIES OF EQUIPMENT IN THE VICINITY OF THE BLOWER, BACKGROUND NOISE, ETC.
9. SEE DRAWING 514-55700-19 FOR COMPRESSED AIR DETAILS.
10. PRESSURE SETTINGS.

CONVEYOR LOW PRESSURE
SET AT 1 PSIG. THIS INDICATES THAT THE BLOWER IS OPERATING. WHEN THE PRESSURE IN THE CONVEYOR DROPS BELOW OR INITIALLY DOES NOT EXCEED THIS PRESSURE, IT WILL INITIATE AN ALARM AND CLOSE ALL OPEN FEEDER GATES. THE BLOWER WILL CONTINUE TO RUN.

NO LOAD
INITIALLY FIELD SET AT 80% OF THE FULL LOAD SETTING (10.8 PSIG). THIS INDICATES THAT THE NUVA FEEDER VESSELS ARE NO LONGER FILLING FULLY. WHEN THE PRESSURE IN THE CONVEYOR DROPS BELOW THIS PRESSURE, BRANCH LINE TRANSFER OR SYSTEM SHUT DOWN IS INITIATED.

FULL LOAD
INITIALLY FIELD SET TO 13.5 PSIG. THIS IS THE PRESSURE SETTING AT WHICH THE SYSTEM IS DESIGNED TO OPERATE. WHEN THE PRESSURE IN THE CONVEYOR EXCEEDS THIS PRESSURE THE FEEDER GATES WILL CLOSE TO AVOID OVERLOADING THE CONVEYOR PIPE WITH MATERIAL. WHEN THE PRESSURE IN THE CONVEYOR DROPS BELOW THIS PRESSURE, THE FEEDER GATES WILL REOPEN.

CONVEYOR HIGH PRESSURE
INITIALLY FIELD SET TO 0.5 PSIG BELOW THE RELIEF VALVE SETTING. WHEN THE PRESSURE IN THE CONVEYOR EXCEEDS THIS PRESSURE FOR SEVERAL SECONDS OR 'SPIKES' ABOVE THIS PRESSURE SEVERAL TIMES IN A SPECIFIED TIME PERIOD, IT WILL INITIATE AN ALARM AND PERFORM AN EMERGENCY STOP.

11. TEMPERATURE ELEMENT TAGS ARE CODED TO CLARIFY THE TYPE OF TEMPERATURE ELEMENT. THE FOLLOWING CODE LETTERS APPLY:

R1 - RTD USED BY THE PLC
R2 - RTD FOR FUTURE USE BY CUSTOMER
R3 - RTD USED BY CUSTOMER'S MCC PROTECTION CIRCUT
T1 - THERMOCOUPLE, USED FOR FRONT BEARING
T2 - THERMOCOUPLE, USED FOR REAR BEARING
T3 - THERMOCOUPLE, NOT FURNISHED ON MOTOR, RESERVED FOR PLC ANALOG INPUT.

FOR GENERAL NOTES AND REFERENCES SEE DRAWING 514-55700-01

THIS DRAWING SHALL NOT BE CONSIDERED A CERTIFIED DOCUMENT UNLESS WRITTEN APPROVAL SIGNATURES OR INITIALS ARE PRESENT.
THIS DRAWING IS AN UNPUBLISHED COPYRIGHTED WORK CONTAINING PROPRIETARY INFORMATION OF UNITED CONVEYOR CORPORATION, AND IS LOANED FOR USE IN THE CONDUCT OF COMPANY BUSINESS ONLY. THIS COPY HAS BEEN PROVIDED ON THE BASIS OF STRICT CONFIDENTIALITY AND WITH THE EXPRESS UNDERSTANDING THAT EXCEPT IN THE CONDUCT OF UNITED CONVEYOR CORPORATION BUSINESS, IT MAY NOT BE REPRODUCED, OR REVEALED TO ANY PERSON, IN WHOLE OR IN PART, WITHOUT EXPRESS WRITTEN PERMISSION FROM UNITED CONVEYOR CORPORATION, WHICH IS THE SOLE OWNER OF COPYRIGHT AND ALL OTHER RIGHTS THEREIN. BY RECEIVING THIS DRAWING, THE RECIPIENT AGREES TO RETURN IT UPON REQUEST.

THE INSTALLATION AND OPERATION OF UNITED CONVEYOR CORPORATION EQUIPMENT, IN ACCORDANCE WITH APPROVED PLANS AND OPERATING INSTRUCTIONS, SHALL BE THE SOLE RESPONSIBILITY OF THE PURCHASER, UNLESS OTHERWISE SPECIFIED BY CONTRACT.

COST OF ANY MODIFICATIONS TO UNITED CONVEYOR CORPORATION EQUIPMENT TO AVOID FIELD OBSTRUCTIONS, OR CORRECTIONS DUE TO MINOR DRAWING AND/OR FABRICATION ERRORS, ARE NOT CHARGEABLE TO UNITED CONVEYOR CORPORATION. WE WILL ACCEPT NO BACKCHARGES FOR ANY WORK PERFORMED IN THE FIELD UNLESS APPROVED BY OUR SERVICE GROUP (U.C. SERVICE CORPORATION) AT WAUKEGAN.

| REVISION | DESCRIPTION | DATE | DSGN | CHKD | APPD (ENGR) | APPD (PROJ) |
|---|---|---|---|---|---|---|
| | | / / | | | | |
| | | / / | | | | |
| | | / / | | | | |
| | | / / | | | | |
| | | / / | | | | |
| D | REVISED PER FWUSA AND UCC COMMENTS - CERTIFIED | 01/30/01 | SMZ | GAK | RDH | RDH |
| C | REVISED PER FWUSA AND UCC COMMENTS - CERTIFIED | 01/24/00 | SMZ | GAK | RDH | RDH |
| B | REVISED PER CUSTOMER COMMENTS | 01/24/00 | SMZ | RDH | RDH | RDH |
| A | INITIAL SUBMITTAL | 04/25/98 | KLM | JAK | RDH | RDH |

| SCALE | CONTRACT NUMBER | SUBSYSTEM | DRAWING LETTER IDENTIFICATION |
|---|---|---|---|
| NONE | 55700-01 | P | AR |

TAG NUMBERS N00-N000
FW CONTRACT 13-004600
FW REQN. NO. 4605-1361-0
FW ORDER NO. PP-2002-13-004600
FOR:
JEA
NORTHSIDE UNITS 1 & 2 REPOWERING PROJECT
JACKSONVILLE, FL

B & V DWG. NO. 62.1801.05 - C0019

DRAWING TITLE
P & I DIAGRAM
BED ASH TRANSPORT BLOWERS
UNITS 1 & 2

PLANT NAME
JACKSONVILLE ELECTRIC AUTHORITY
NORTH-SIDE GENERATING STATION
JACKSONVILLE, FLORIDA

UNITED CONVEYOR CORPORATION
2100 NORMAN DRIVE WEST
WAUKEGAN, ILLINOIS 60085

DRAWING NUMBER: 514-55700-17
REVISION: D

FORM 3020-09 04/97

CRA33213 11-SEP-2002 13:12:54

P062713.62.1801.05-C0019 St:RD 02/28/01 MM-01592

CRA33213 11-SEP-2002 13:10:22

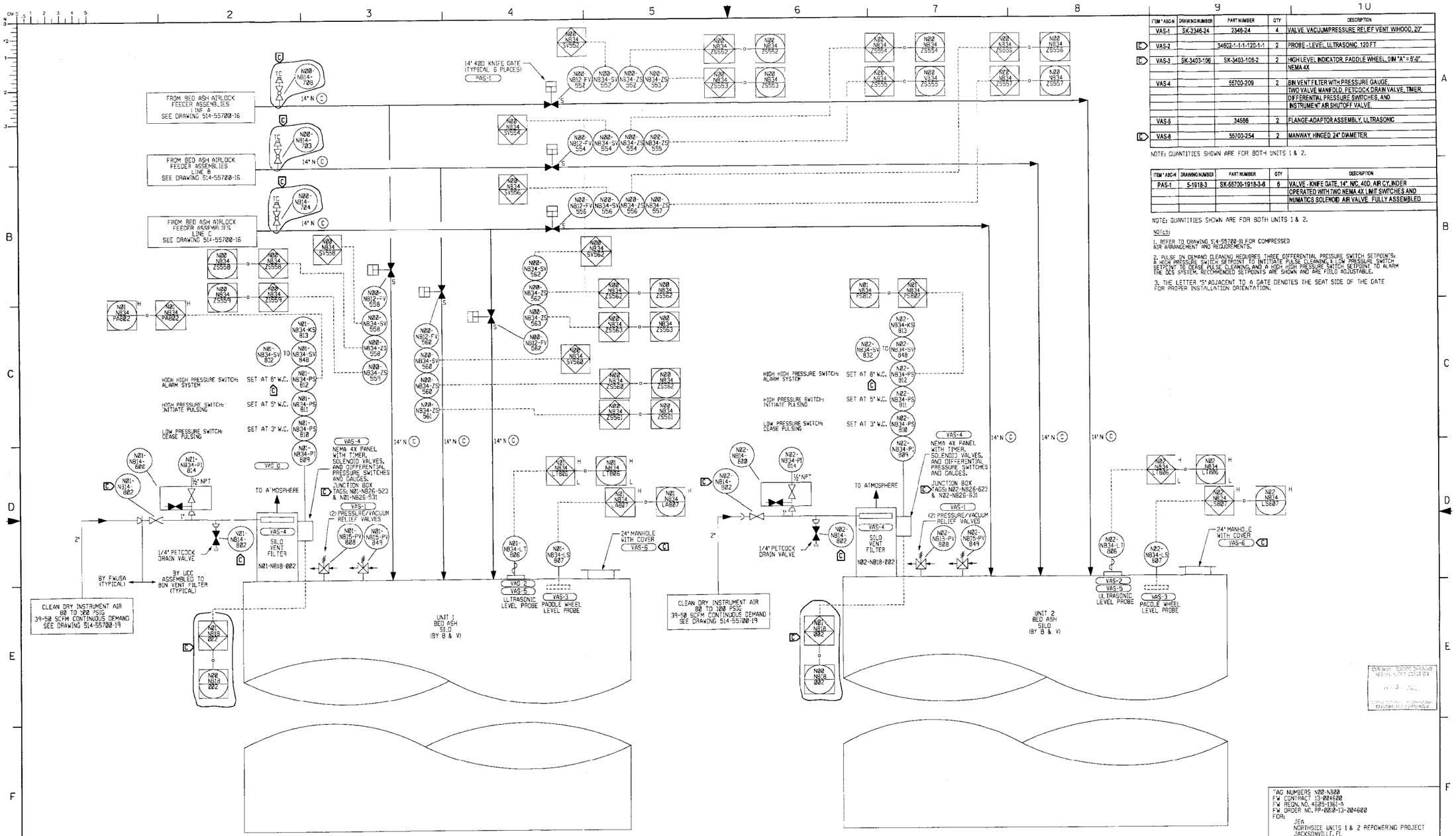


| ITEM * ABC-N | DRAWING NUMBER | PART NUMBER | QTY | DESCRIPTION |
|---|---|---|---|---|
| VAS-1 | SK-2346-24 | 2346-24 | 4 | VALVE, VACUUM/PRESSURE RELIEF VENT W/HOOD, 20" |
| C VAS-2 | | 34602-1-1-1-120-1-1 | 2 | PROBE - LEVEL, ULTRASONIC, 120 FT |
| C VAS-3 | SK-3403-106 | SK-3403-106-2 | 2 | HIGH LEVEL INDICATOR, PADDLE WHEEL, DIM "A" = 8'-0" NEMA 4X |
| VAS-4 | | 55700-209 | 2 | BIN VENT FILTER WITH PRESSURE GAUGE, TWO VALVE MANIFOLD, PETCOCK DRAIN VALVE, TIMER, DIFFERENTIAL PRESSURE SWITCHES, AND INSTRUMENT AIR SHUTOFF VALVE. |
| VAS-5 | | 34586 | 2 | FLANGE ADAPTOR ASSEMBLY, ULTRASONIC |
| C VAS-6 | | 55700-254 | 2 | MANWAY, HINGED, 24" DIAMETER |

NOTE: QUANTITIES SHOWN ARE FOR BOTH UNITS 1 & 2.

| ITEM * ABC-N | DRAWING NUMBER | PART NUMBER | QTY | DESCRIPTION |
|---|---|---|---|---|
| PAS-1 | 5-1918-3 | SK-55700-1918-3-6 | 6 | VALVE - KNIFE GATE, 14" NC, 40D, AIR CY. INDER OPERATED WITH TWO NEMA 4X LIMIT SWITCHES AND NUMATICS SOLENOID AIR VALVE, FULLY ASSEMBLED |

NOTE: QUANTITIES SHOWN ARE FOR BOTH UNITS 1 & 2.

NOTES:

1. REFER TO DRAWING 514-55700-11 FOR COMPRESSED AIR ARRANGEMENT AND REQUIREMENTS.

2. PULSE ON DEMAND CLEANING REQUIRES THREE DIFFERENTIAL PRESSURE SWITCH SETPOINTS: A HIGH PRESSURE SWITCH SETPOINT TO INITIATE PULSE CLEANING, A LOW PRESSURE SWITCH SETPOINT TO CEASE PULSE CLEANING AND A HIGH HIGH PRESSURE SWITCH SETPOINT TO ALARM THE DCS SYSTEM. RECOMMENDED SETPOINTS ARE SHOWN AND ARE FIELD ADJUSTABLE.

3. THE LETTER "S" ADJACENT TO A GATE DENOTES THE SEAT SIDE OF THE GATE FOR PROPER INSTALLATION ORIENTATION.

TAG NUMBERS N00-N300
FW CONTRACT 13-024600
FW REQN. NO. 4605-1361-A
FW ORDER NO. PP-0010-13-024600
FOR:
JEA
NORTHSIDE UNITS 1 & 2 REPOWERING PROJECT
JACKSONVILLE, FL

B & V DWG. NO. 62.1801.05 ~~C0010~~ C0020

DRAWING TITLE
P & I DIAGRAM
BED ASH STORAGE SILOS
UNITS 1 & 2

PLANT NAME
JACKSONVILLE ELECTRIC AUTHORITY
NORTHSIDE GENERATING STATION
JACKSONVILLE, FLORIDA

UNITED CONVEYOR CORPORATION
2100 NORMAN DRIVE WEST
WAUKEGAN, ILLINOIS 60085

DRAWING NUMBER: 514-55700-18
REVISION: C

FOR GENERAL NOTES AND REFERENCES SEE DRAWING 514-55700-1

THIS DRAWING SHALL NOT BE CONSIDERED A CERTIFIED DOCUMENT UNLESS WRITTEN APPROVAL SIGNATURES OR INITIALS ARE PRESENT.

THIS DRAWING IS AN UNPUBLISHED COPYRIGHTED WORK CONTAINING PROPRIETARY INFORMATION OF UNITED CONVEYOR CORPORATION, AND IS LOANED FOR USE IN THE CONDUCT OF COMPANY BUSINESS ONLY. THIS COPY HAS BEEN PROVIDED ON THE BASIS OF STRICT CONFIDENTIALITY AND WITH THE EXPRESS UNDERSTANDING THAT EXCEPT IN THE CONDUCT OF UNITED CONVEYOR CORPORATION BUSINESS, IT MAY NOT BE REPRODUCED, OR REVEALED TO ANY PERSON, IN WHOLE OR IN PART, WITHOUT EXPRESS WRITTEN PERMISSION FROM UNITED CONVEYOR CORPORATION, WHICH IS THE SOLE OWNER OF COPYRIGHT AND ALL OTHER RIGHTS THEREIN. BY RECEIVING THIS DRAWING, THE RECIPIENT AGREES TO RETURN IT UPON REQUEST.

THE INSTALLATION AND OPERATION OF UNITED CONVEYOR CORPORATION EQUIPMENT, IN ACCORDANCE WITH APPROVED PLANS AND OPERATING INSTRUCTIONS, SHALL BE THE SOLE RESPONSIBILITY OF THE PURCHASER, UNLESS OTHERWISE SPECIFIED BY CONTRACT.

COST OF ANY MODIFICATIONS TO UNITED CONVEYOR CORPORATION EQUIPMENT TO AVOID FIELD OBSTRUCTIONS, OR CORRECTIONS DUE TO MINOR DRAWING AND/OR FABRICATION ERRORS, ARE NOT CHARGEABLE TO UNITED CONVEYOR CORPORATION. WE WILL ACCEPT NO BACKCHARGES FOR ANY WORK PERFORMED IN THE FIELD UNLESS APPROVED BY OUR SERVICE GROUP (U.C. SERVICE CORPORATION) AT WAUKEGAN.

01/30/01

| REVISION | DESCRIPTION | DATE | DSGN | CHKD | APPD (ENGR) | APPD (PROJ) |
|---|---|---|---|---|---|---|
| C | REVISED PER FWUSA AND UCC COMMENTS - CERTIFIED | 01/30/01 | SMZ | GAK | RDH | RDH |
| B | REVISED PER FWUSA AND UCC COMMENTS - CERTIFIED | 09/12/00 | SMZ | GAK | RDH | RDH |
| A | INITIAL SUBMITTAL | 04/28/00 | KLM | JAK | RDH | RDH |

| SCALE | CONTRACT NUMBER | SUBSYSTEM | DRAWING LETTER IDENTIFICATION |
|---|---|---|---|
| NONE | 55702-01 | V, P | AS |

N:\PROJECTS\55700\514-018.DGN

FORM 1820-09 04/97

P062713.62.1801.05-C0020 St:RD 02/28/01 MM-01592

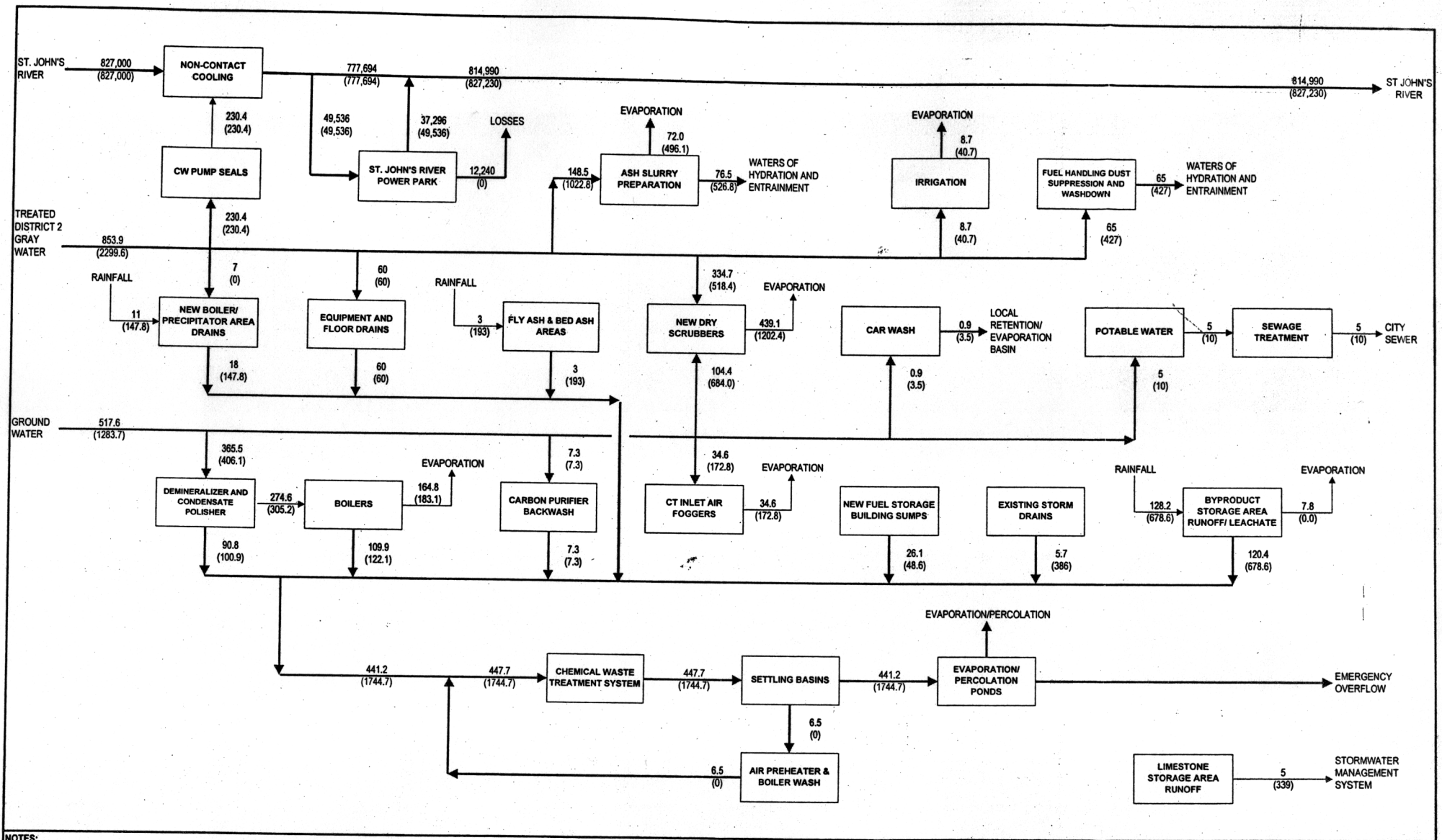


NOTES:

1. CONCEPT PRESENTED MAXIMIZES REUSE OF TREATED DISTRICT 2 GRAY WATER.
2. STORM WATER MAXIMUM FLOWS ARE BASED ON 25-YEAR 24-HOUR STORM.
3. FLOWS IN PARENTHESES REPRESENT 24 HOUR MAXIMUM FLOWS.
4. FLOWS ARE IN GPD X 1000.
5. BALANCE IS BASED ON CELL 1 ONLY OF THE BYPRODUCT STORAGE AREA IN SERVICE, WITH THREE RUNOFF PONDS.
6. ASSUME POTABLE WATER USED FOR DRY SCRUBBER SLAKING WATER.

| | | | |
|---|---|---|---|
| BLACK & VEATCH LLP | JEA<br>NORTHSIDE GENERATING STATION | Project<br>62713.1090 | Drawing<br>WMB-1 | Rev<br>C |
| Eng: TSA<br>Check: | Dwg: TSA<br>Date: 12/08/2000 | WATER MASS BALANCE<br>ANNUAL AVERAGE, CELL 1 OF BSA ONLY | | |

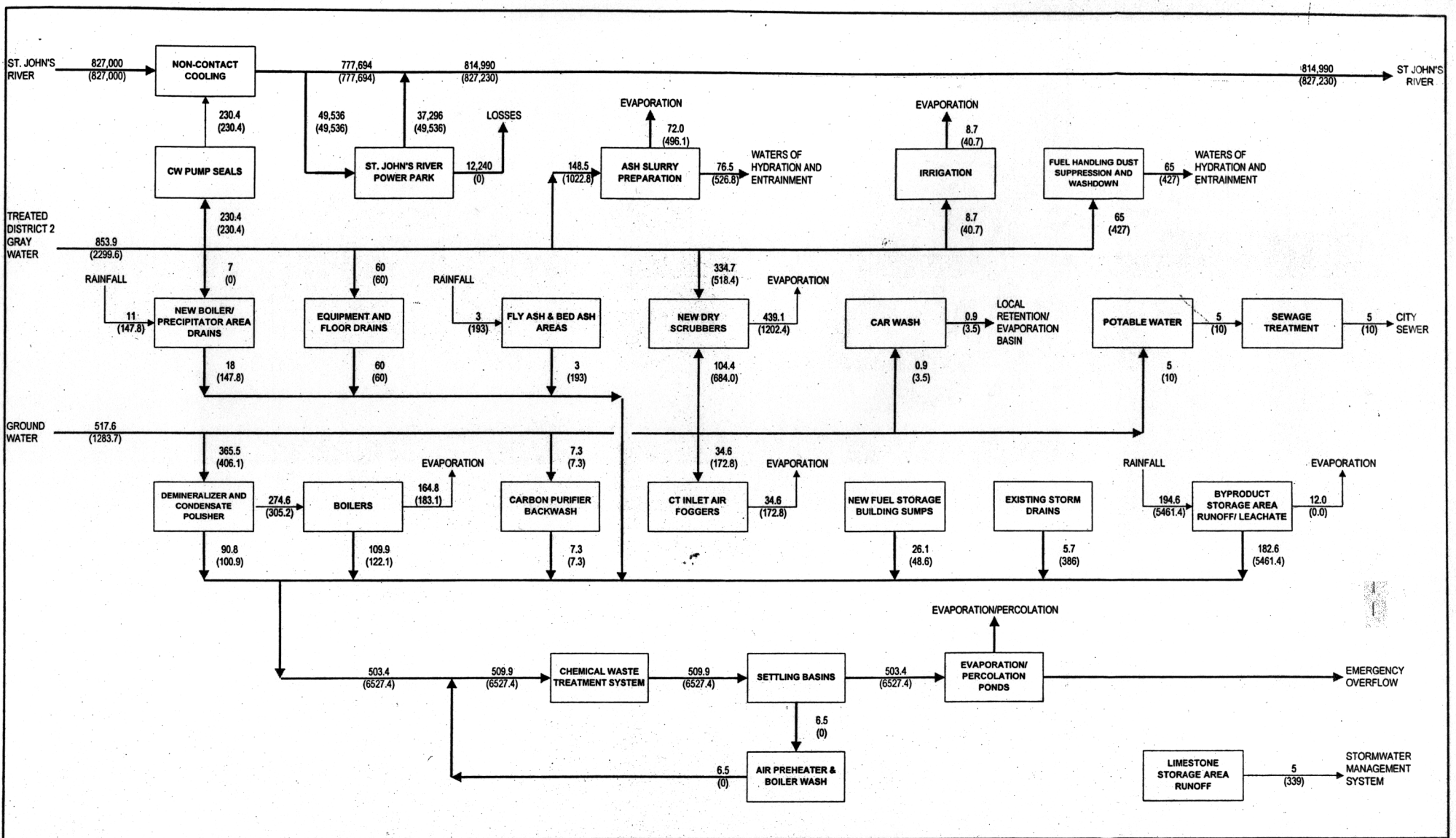


**NOTES:**

1. CONCEPT PRESENTED MAXIMIZES USE OF TREATED DISTRICT 2 GRAY WATER.
2. STORM WATER MAXIMUM FLOWS ARE BASED ON 25-YEAR 24-HOUR STORM.
3. FLOWS IN PARENTHESES REPRESENT 24 HOUR MAXIMUM FLOWS.
4. FLOWS ARE IN GPD X 1000.
5. BALANCE IS BASED ON BOTH CELLS 1 AND 2 OF THE BYPRODUCT STORAGE AREA IN SERVICE, WITH THREE RUNOFF PONDS IN SERVICE.
6. ASSUME POTABLE WATER USED FOR DRY SCRUBBER SLAKING WATER.

BLACK & VEATCH LLP

| Eng: TSA | Dwg: TSA |
|---|---|
| Check: | Date: 12/08/2000 |

JEA
NORTHSIDE GENERATING STATION

WATER MASS BALANCE
ANNUAL AVERAGE, CELLS 1 AND 2 OF BSA

| Project | Drawing | Rev |
|---|---|---|
| 62713.1090 | WMB-2 | C |

CRA33213 11-SEP-2002 14:11:54

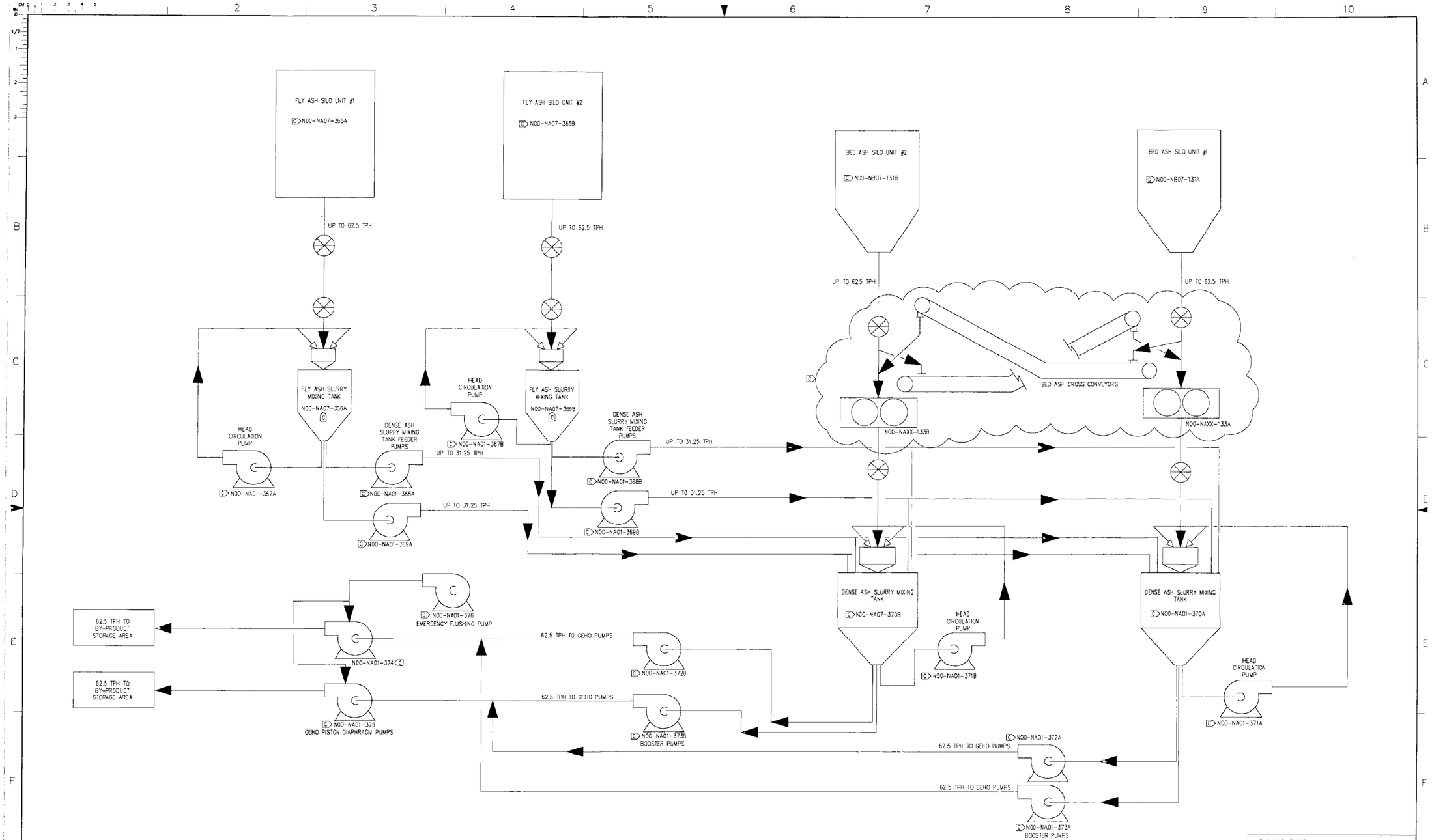


FOR GENERAL NOTES AND REFERENCES SEE DRAWING M-55700-1

B & V DWG. NO. 62713.62.1806.05-C1003

THIS DRAWING SHALL NOT BE CONSIDERED A CERTIFIED DOCUMENT UNLESS WRITTEN APPROVAL SIGNATURES OR INITIALS ARE PRESENT.

THIS DRAWING IS AN UNPUBLISHED COPYRIGHTED WORK CONTAINING PROPRIETARY INFORMATION OF UNITED CONVEYOR CORPORATION, AND IS LOANED FOR USE IN THE CONDUCT OF COMPANY BUSINESS ONLY. THIS COPY HAS BEEN PROVIDED ON THE BASIS OF STRICT CONFIDENTIALITY AND WITH THE EXPRESS UNDERSTANDING THAT EXCEPT IN THE CONDUCT OF UNITED CONVEYOR CORPORATION BUSINESS, IT MAY NOT BE REPRODUCED, OR REVEALED TO ANY PERSON, IN WHOLE OR IN PART, WITHOUT EXPRESS WRITTEN PERMISSION FROM UNITED CONVEYOR CORPORATION, WHICH IS THE SOLE OWNER OF COPYRIGHT AND ALL OTHER RIGHTS THEREIN. BY RECEIVING THIS DRAWING, THE RECIPIENT AGREES TO RETURN IT UPON REQUEST.

THE INSTALLATION AND OPERATION OF UNITED CONVEYOR CORPORATION EQUIPMENT, IN ACCORDANCE WITH APPROVED PLANS AND OPERATING INSTRUCTIONS, SHALL BE THE SOLE RESPONSIBILITY OF THE PURCHASER, UNLESS OTHERWISE SPECIFIED BY CONTRACT.

COST OF ANY MODIFICATIONS TO UNITED CONVEYOR CORPORATION EQUIPMENT TO AVOID FIELD OBSTRUCTIONS, OR CORRECTIONS DUE TO MINOR DRAWING AND/OR FABRICATION ERRORS, ARE NOT CHARGEABLE TO UNITED CONVEYOR CORPORATION. WE WILL ACCEPT NO BACKCHARGES FOR ANY WORK PERFORMED IN THE FIELD UNLESS APPROVED BY OUR SERVICE GROUP (U.C. SERVICE CORPORATION) AT WAUKEGAN.

| REVISION | DESCRIPTION | DATE | DSGN | CHKD | APPD (ENGR) | APPD (PROJ) |
|---|---|---|---|---|---|---|
| C | REVISED PER B & V COMMENTS DATED 4/5/01 & NEW SCOPE | 06/07/01 | GCL | [illegible] | [illegible] | [illegible] |
| B | REVISED PER B & V COMMENTS DATED 2/07/01 | 2/23/01 | GCL | MEM | GCL | MEM |
| A | INITIAL SUBMITTAL | 01/26/01 | GCL | MEM | GCL | MEM |

| SCALE | CONTRACT NUMBER | SUBSYSTEM | DRAWING SIZE |
|---|---|---|---|
| NONE | 55700-04 | - | 5 |

DRAWING TITLE: KEY PROCESS DIAGRAM MATERIAL FLOWS UNITS 1 AND 2

PLANT NAME: JACKSONVILLE ELECTRIC AUTHORITY NORTHSIDE GENERATING STATION JACKSONVILLE, FLORIDA

UNITED CONVEYOR CORPORATION
2100 NORMAN DRIVE WEST
WAUKEGAN, ILLINOIS 60085

DRAWING NUMBER: M-55700-3 REVISION: C

N:\SYSTEMSENG\PROJECTS\55700\DWG\M-003.DWG

P062713.62.1806.05-C1003 St:NE 06/25/01 MS-00397

# EQUIPMENT SYSTEM DIAGRAM LEGEND

- POST INDICATOR VALVE
- GLOBE VALVE (OPEN)
- GLOBE VALVE (CLOSED)
- GATE VALVE (OPEN)
- GATE VALVE (CLOSED)
- CHECK VALVE
- BALL VALVE (OPEN)
- BALL VALVE (CLOSED)
- BUTTERFLY VALVE (OPEN)
- BUTTERFLY VALVE (CLOSED)
- ANGLE VALVE (OPEN)
- ANGLE VALVE (CLOSED)
- RELIEF/SAFETY VALVE
- 3–WAY VALVE
- AV — AIR RELEASE VALVE
- S — SOLENOID ACTUATOR
- CYLINDER ACTUATOR
- DIAPHRAGM ACTUATOR
- STOP CHECK VALVE
- PLUG VALVE
- BACK–PRESSURE VALVE
- DIAPHRAGM VALVE (OPEN)
- DIAPHRAGM VALVE (CLOSED)
- REG. — SELF CONTAINED PRESSURE REGULATOR
- SELF CONTAINED PRESSURE REGULATING VALVE
- F — FILTER
- PUMP (POS. DISPLACEMT.)
- HOSE CONNECTION
- THREADED CAP
- WELDED CAP
- PUMP (CENTRIFUGAL)
- M — MOTOR
- ORIFICE
- PRESSURE BREAKDOWN ORIFICE
- STEAM TRAP WITH STRAINER
- BLIND FLANGE
- STRAINER (Y–TYPE)
- SIMPLEX STRAINER
- DUPLEX STRAINER
- CONE STRAINER
- SPECTACLE BLIND
- STEAM TRAP
- D — CONTINUOUS DRAIN
- EXPANSION JOINT
- D — PIPE TO DRAIN
- V — PIPE TO VENT
- S — SAMPLE POINT
- VESSEL VENT
- HEAT TRACING
- REDUCER
- UNION
- FLEXIBLE HOSE
- FAN (CENTRIFUGAL)
- RUPTURE DISC
- P — PRESSURE GAUGE
- T — TEMPERATURE GAUGE
- TC — TEMPERATURE CONTROL
- TE — TEMPERATURE ELEMENT
- TS — TEMPERATURE SWITCH
- PT — PRESSURE TRANSMITTER
- PS — PRESSURE SWITCH
- DPS — DIFFERENTIAL PRESSURE SWITCH
- FT — FLOW TRANSMITTER
- FS — FLOW SWITCH
- LI — LEVEL INDICATOR
- LC — LEVEL CONTROLLER
- LT — LEVEL TRANSMITTER
- FIRE HYDRANT
- SIAMESE CONNECTION
- BIRD SCREEN
- TC — TEST CONNECTION
- ATTEMPERATOR
- ATTEMPERATOR WITH INTEGRAL SPRAY CONTROL
- FM — FLOW METER (VENTURI TYPE)
- VENTURI

| REV. NO. | CAD BY | AUTOCAD DATE | REASON/REVISION BY | APP. BY |
|---|---|---|---|---|
| | | | | |

JEA — EQUIPMENT SYSTEM DIAGRAM

UNIT: R1&2 CRAFT: M DRAWING NO.: LEGEND
GROUP: 0 –
SYSTEM: 0 –
TITLE: LEGEND SHEET

FILE NAME: M30LEGEND SHT. 1 OF 1

| NO | DATE | REVISIONS AND RECORD OF ISSUE | BY | CHK | APP | FLM |
|---|---|---|---|---|---|---|
| 2 | 08/15/02 | CONFORMED TO CONSTRUCTION RECORDS | TPC | ALC | ALC | |
| 1 | 01/23/01 | GENERAL REVISIONS | WDM | DRG | ALC | |
| 0 | 11/10/00 | RELEASED FOR CONSTRUCTION | WDM | DRG | ALC | |

I HEREBY CERTIFY THAT THIS DOCUMENT WAS PREPARED BY ME OR UNDER MY DIRECT SUPERVISION AND THAT I AM A DULY REGISTERED PROFESSIONAL ENGINEER UNDER THE LAWS OF THE STATE OF FLORIDA.

SIGNED ANTHONY COMPAAN
DATE 11/10/00 REG NO. 45662

BLACK & VEATCH — JEA Building Community

ENGINEER DRG DRAWN FCM
CHECKED DATE 4/6/00

JEA EQUIPMENT NUMBER: N00–UU

JEA DRAWING NUMBER: M30LEGEND 1 OF 1

JEA
NORTHSIDE UNITS 1 & 2 REPOWERING PROJECT

LEGEND
PIPING AND INSTRUMENT DIAGRAM

PROJECT DRAWING NUMBER: 62713–CUU–M2001A REV 2
CODE
AREA
M30LEGEND

IDL30124 ACAD 15.05
A1ASL005 C1 1=1
07/24/02 08:01:34

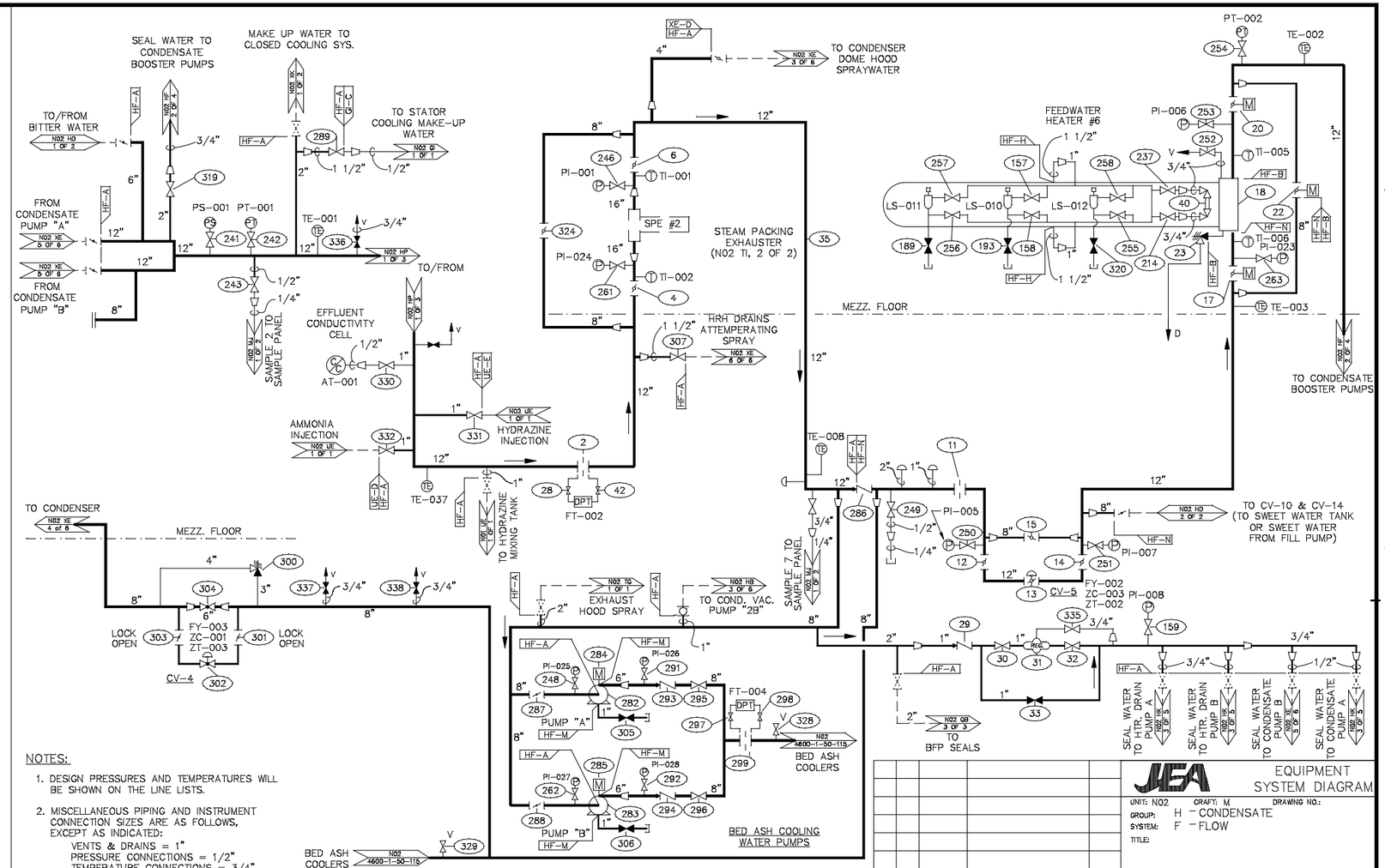


NOTES:

1. DESIGN PRESSURES AND TEMPERATURES WILL BE SHOWN ON THE LINE LISTS.
2. MISCELLANEOUS PIPING AND INSTRUMENT CONNECTION SIZES ARE AS FOLLOWS, EXCEPT AS INDICATED:
   VENTS & DRAINS = 1"
   PRESSURE CONNECTIONS = 1/2"
   TEMPERATURE CONNECTIONS = 3/4"

| REV. NO. | CAD BY | AUTOCAD DATE | REASON/REVISION BY | APP. BY |
|---|---|---|---|---|

JEA EQUIPMENT SYSTEM DIAGRAM

UNIT: N02 CRAFT: M DRAWING NO.:
GROUP: H - CONDENSATE
SYSTEM: F - FLOW
TITLE:

FILE NAME: M32HF01A.DWG SHT. 1 OF 4

| NO | DATE | REVISIONS AND RECORD OF ISSUE | BY | CHK | APP | FLM |
|---|---|---|---|---|---|---|
| 5 | 08/15/02 | CONFORMED TO CONSTRUCTION RECORDS | TPC | ALC | ALC | |
| 4 | 06/21/01 | GENERAL REVISIONS | DRG | FHT | ALC | |
| 3 | 04/19/01 | GENERAL REVISIONS | WDM | DRG | ALC | |
| 2 | 01/24/01 | GENERAL REVISIONS | WDM | DRG | ALC | |
| 1 | 8/23/00 | ADDED STRIPPER COOLING WTR PMPS | WDM | DRG | ALC | |
| 0 | 5/8/00 | ISSUED FOR CONSTRUCTION | FCM | DRG | ALC | |

I HEREBY CERTIFY THAT THIS DOCUMENT WAS PREPARED BY ME OR UNDER MY DIRECT SUPERVISION AND THAT I AM A DULY REGISTERED PROFESSIONAL ENGINEER UNDER THE LAWS OF THE STATE OF FLORIDA.

SIGNED ANTHONY COMPAAN
DATE 5/10/00 REG NO. 45662

BLACK & VEATCH — JEA Building Community

| ENGINEER | WM | DRAWN | FCM |
|---|---|---|---|
| CHECKED | DRG | DATE | 5/5/00 |

JEA EQUIPMENT NUMBER: N02-HF

JEA DRAWING NUMBER: M32HF01A 1 OF 4

JEA
NORTHSIDE UNITS 1 & 2 REPOWERING PROJECT

CONDENSATE-FLOW
PIPING AND INSTRUMENT DIAGRAM

PROJECT DRAWING NUMBER: 62713-2HF-M2343A REV: 5

CODE / AREA: M32HF01A

ACAD 15.05 C1 1=1 13:19:35
IDL30124 A1ASL005 08/16/02

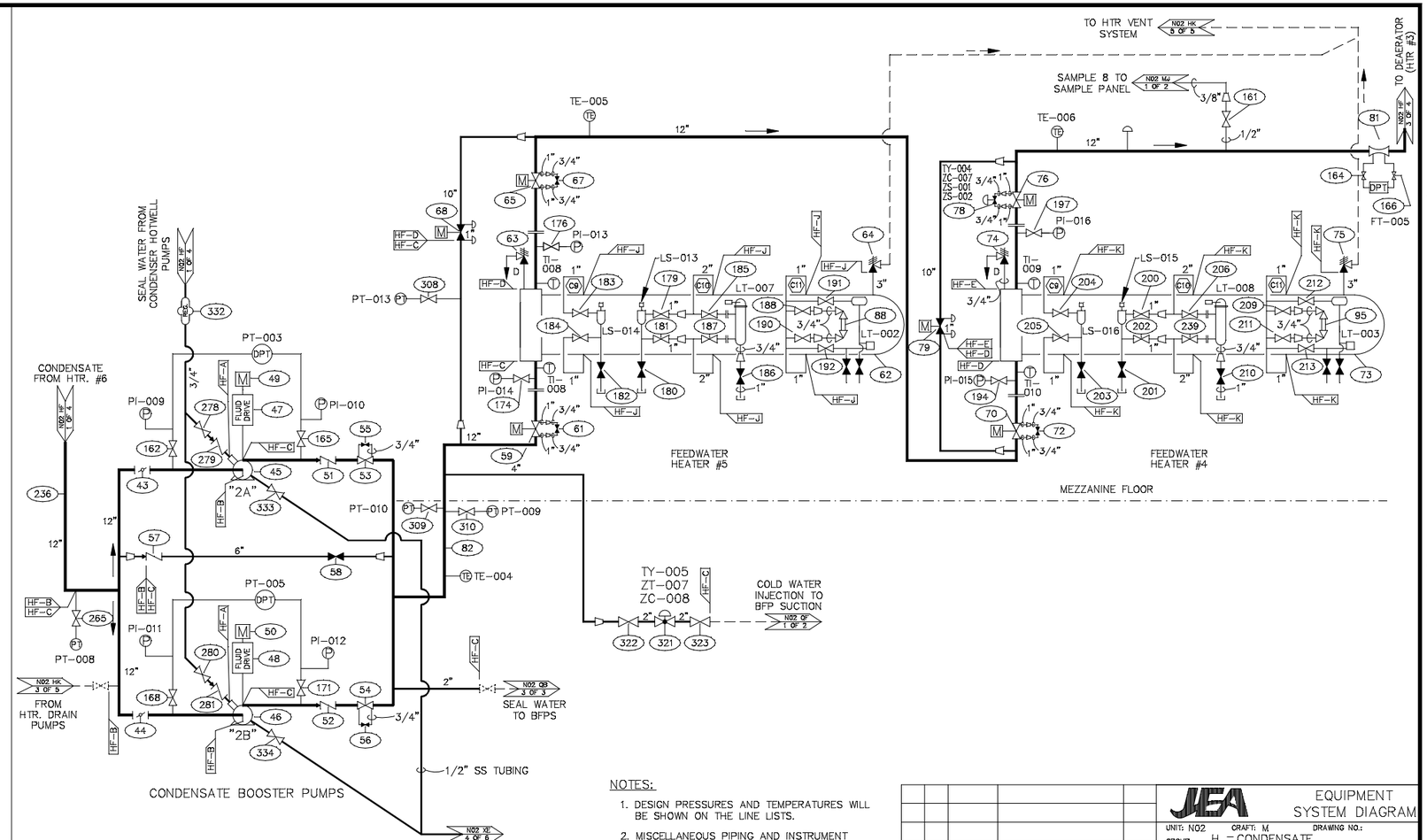


NOTES:

1. DESIGN PRESSURES AND TEMPERATURES WILL BE SHOWN ON THE LINE LISTS.
2. MISCELLANEOUS PIPING AND INSTRUMENT CONNECTION SIZES ARE AS FOLLOWS, EXCEPT AS INDICATED:
   VENTS & DRAINS = 1"
   PRESSURE CONNECTIONS = 1/2"
   TEMPERATURE CONNECTIONS = 3/4"

| REV. NO. | CAD BY | AUTOCAD DATE | REASON/REVISION BY | APP. BY |
|---|---|---|---|---|
| 0 | FCM | 5/8/00 | ISSUED FOR CONSTRUCTION | |

JEA EQUIPMENT SYSTEM DIAGRAM

UNITS: N02 CRAFT: M DRAWING NO.:
GROUP: H – CONDENSATE
SYSTEM: F – FLOW
TITLE:
FILE NAME: M32HF02A.DWG SHT. 2 OF 4

| NO | DATE | REVISIONS AND RECORD OF ISSUE | BY | CHK | APP | FLM |
|---|---|---|---|---|---|---|
| 4 | 08/15/02 | CONFORMED TO CONSTRUCTION RECORDS | TPC | ALC | ALC | |
| 3 | 06/21/01 | GENERAL REVISIONS | DRG | FHT | ALC | |
| 2 | 04/20/01 | GENERAL REVISIONS | WDM | DRG | ALC | |
| 1 | 01/24/00 | GENERAL REVISIONS | WDM | DRG | ALC | |
| 0 | 5/8/00 | ISSUED FOR CONSTRUCTION | FCM | DRG | ALC | |

I HEREBY CERTIFY THAT THIS DOCUMENT WAS PREPARED BY ME OR UNDER MY DIRECT SUPERVISION AND THAT I AM A DULY REGISTERED PROFESSIONAL ENGINEER UNDER THE LAWS OF THE STATE OF FLORIDA.
SIGNED ANTHONY CAMPAAN
DATE 5/10/00 REG NO. 45662

BLACK & VEATCH — JEA Building Community

ENGINEER WM DRAWN FCM
CHECKED DRG DATE 5/5/00

JEA EQUIPMENT NUMBER: N02–HF

JEA DRAWING NUMBER: M32HF02A 2 OF 4

JEA
NORTHSIDE UNITS 1 & 2 REPOWERING PROJECT

PROJECT DRAWING NUMBER: 62713–2HF–M2343B REV 4

CONDENSATE–FLOW
PIPING AND INSTRUMENT DIAGRAM

CODE
AREA
M32HF02A

IDL30124 ACAD 15.05
A1:ISO.DSS C1 1=1
07/10/02 14:06:48

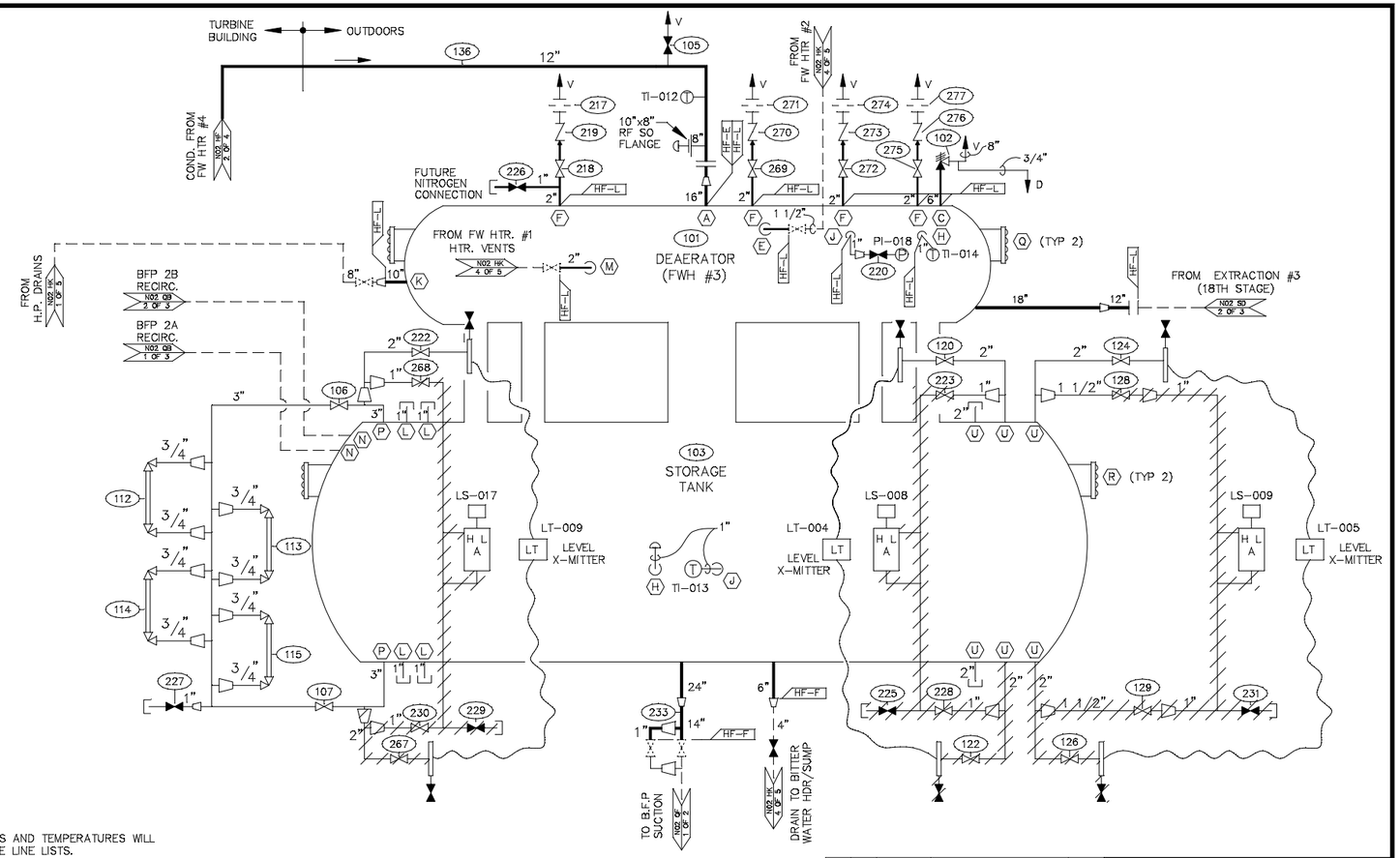


NOTES:

1. DESIGN PRESSURES AND TEMPERATURES WILL BE SHOWN ON THE LINE LISTS.
2. MISCELLANEOUS PIPING AND INSTRUMENT CONNECTION SIZES ARE AS FOLLOWS, EXCEPT AS INDICATED:
   VENTS & DRAINS = 1"
   PRESSURE CONNECTIONS = 1/2"
   TEMPERATURE CONNECTIONS = 3/4"
3. ALL PIPING IS LINE CODE N02-HF09-F UNLESS INDICATED OTHERWISE.

| REV. NO. | CAD BY | AUTOCAD DATE | REASON/REVISION BY | APP. BY |
|---|---|---|---|---|
| 0 | FCM | 5/8/00 | ISSUED FOR CONSTRUCTION | |

JEA EQUIPMENT SYSTEM DIAGRAM

UNIT: N02 CRAFT: M DRAWING NO.:
GROUP: H - CONDENSATE
SYSTEM: F - FLOW
TITLE:
FILE NAME: M32HF03A.DWG SHT. 3 OF 4

| NO | DATE | REVISIONS AND RECORD OF ISSUE | BY | CHK | APP | FLM |
|---|---|---|---|---|---|---|
| 4 | 08/15/02 | CONFORMED TO CONSTRUCTION RECORDS | TPC | ALC | ALC | |
| 3 | 3/12/01 | GENERAL REVISIONS | WDM | DRG | ALC | |
| 2 | 2/7/01 | GENERAL REVISIONS | MMK | DRG | ALC | |
| 1 | 12/27/00 | GENERAL REVISIONS | TPC | DRG | ALC | |
| 0 | 5/8/00 | ISSUED FOR CONSTRUCTION | FCM | DRG | ALC | |

I HEREBY CERTIFY THAT THIS DOCUMENT WAS PREPARED BY ME OR UNDER MY DIRECT SUPERVISION AND THAT I AM A DULY REGISTERED PROFESSIONAL ENGINEER UNDER THE LAWS OF THE STATE OF FLORIDA.
SIGNED ANTHONY COMPAAN
DATE 5/10/00 REG NO. 45662

BLACK & VEATCH — JEA Building Community

| | |
|---|---|
| ENGINEER WM | DRAWN FCM |
| CHECKED DRG | DATE 5/5/00 |

JEA EQUIPMENT NUMBER: N02-HF
JEA DRAWING NUMBER: M32HF03A 3 OF 4

JEA
NORTHSIDE UNITS 1 & 2 REPOWERING PROJECT

CONDENSATE-FLOW
PIPING AND INSTRUMENT DIAGRAM

PROJECT DRAWING NUMBER: 62713-2HF-M2343C
REV: 4
CODE
AREA
M32HF03A

ACAD 15.05
C1 1=1
09:35:00
IDL30124
A1:ISO.005
07/12/02

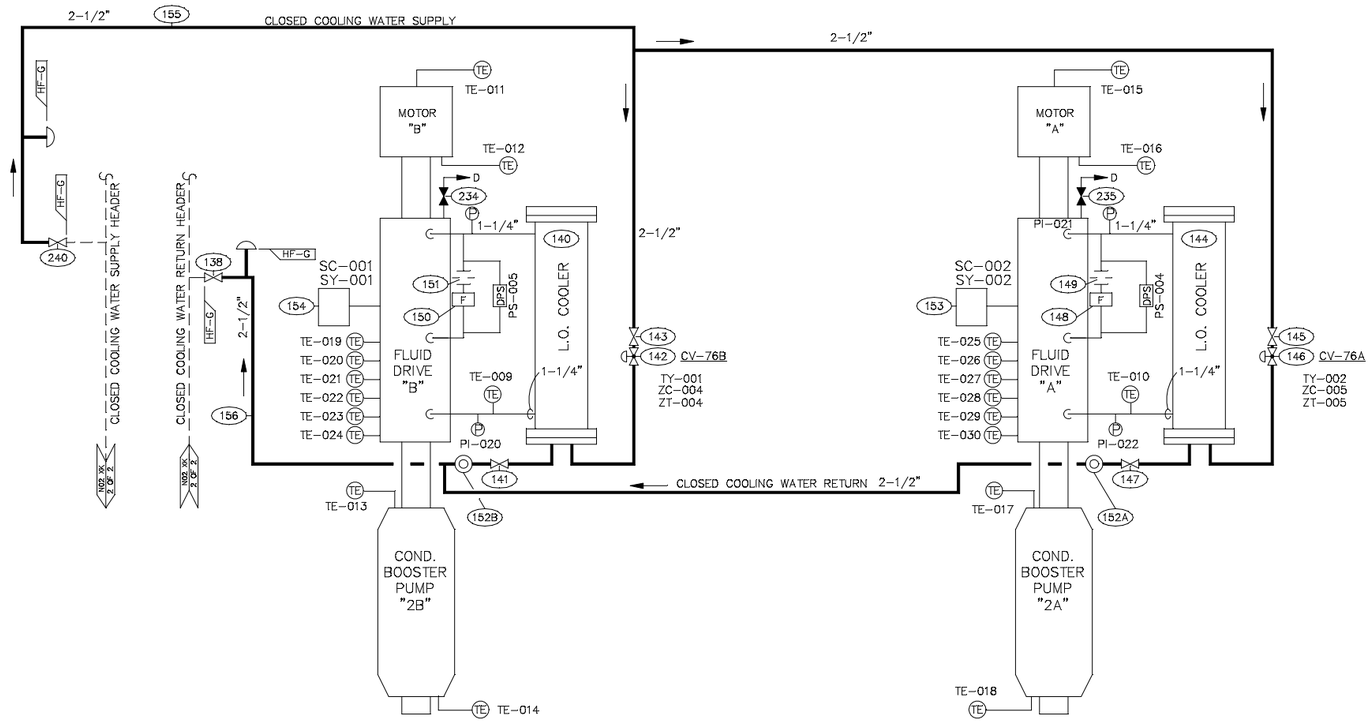


CONDENSATE BOOSTER PUMPS 2A & 2B FLUID DRIVE COOLING SYSTEM

NOTES:

1. DESIGN PRESSURES AND TEMPERATURES WILL BE SHOWN ON THE LINE LISTS.
2. MISCELLANEOUS PIPING AND INSTRUMENT CONNECTION SIZES ARE AS FOLLOWS, EXCEPT AS INDICATED:
   VENTS & DRAINS = 1"
   PRESSURE CONNECTIONS = 1/2"
   TEMPERATURE CONNECTIONS = 3/4"

| REV. NO. | CAD BY | AUTOCAD DATE | REASON/REVISION BY | APP. BY |
|---|---|---|---|---|
| 0 | JLB | 5/8/00 | ISSUED FOR CONSTRUCTION | |

JEA EQUIPMENT SYSTEM DIAGRAM

UNIT: N02 CRAFT: M DRAWING NO.:
GROUP: H - CONDENSATE
SYSTEM: F - FLOW
TITLE:

FILE NAME: M32HF04A.DWG SHT. 4 OF 4

| NO | DATE | REVISIONS AND RECORD OF ISSUE | BY | CHK | APP | FLM |
|---|---|---|---|---|---|---|
| 3 | 08/15/02 | CONFORMED TO CONSTRUCTION RECORDS | TPC | ALC | ALC | |
| 2 | 05/31/01 | OPEN REVISION | DRG | FHT | ALC | |
| 1 | 12/27/00 | GENERAL REVISIONS | TPC | DRG | ALC | |
| 0 | 5-8-00 | ISSUED FOR CONSTRUCTION | JLB | DRG | ALC | |

I HEREBY CERTIFY THAT THIS DOCUMENT WAS PREPARED BY ME OR UNDER MY DIRECT SUPERVISION AND THAT I AM A DULY REGISTERED PROFESSIONAL ENGINEER UNDER THE LAWS OF THE STATE OF FLORIDA.

SIGNED ANTHONY CAMPAAN
DATE 5/10/00 REG NO. 45662

BLACK & VEATCH
JEA Building Community

ENGINEER WM DRAWN JLB
CHECKED DRG DATE 5-5-00

JEA EQUIPMENT NUMBER: N02-HF

JEA DRAWING NUMBER: M32HF04A 4 OF 4

JEA
NORTHSIDE UNITS 1 & 2 REPOWERING PROJECT

PROJECT DRAWING NUMBER: 62713-2HF-M2343D REV 3

CONDENSATE-FLOW
PIPING AND INSTRUMENT DIAGRAM

CODE
AREA
M32HF04A

IDL30124 ACAD 15.05
A1ASL005 C1 1=1
07/12/02 09:36:25

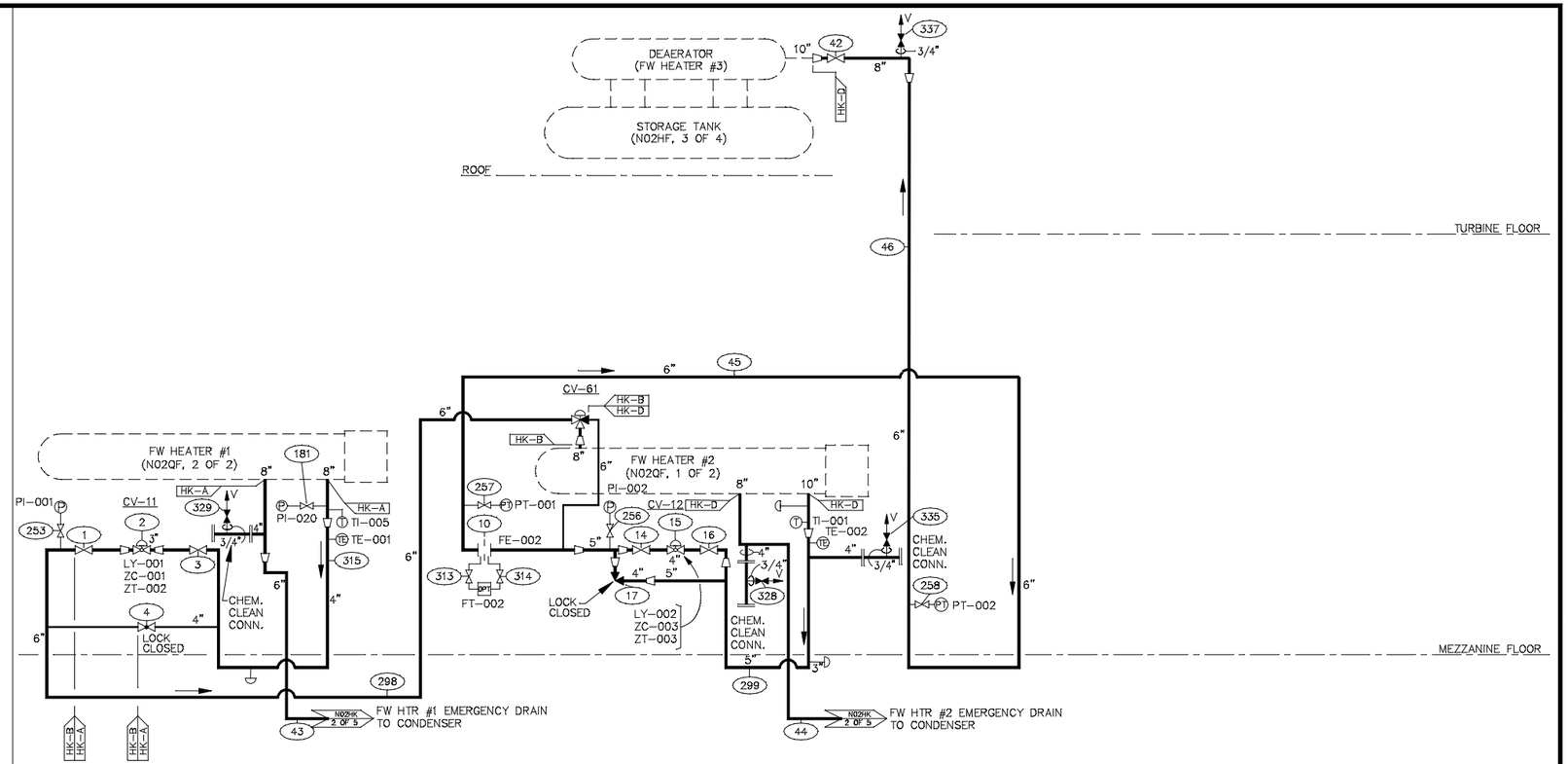


HP FW HEATER CASCADE DRAINS

NOTES:

1. SEE PIPELINE LISTS FOR PRESSURES AND TEMPERATURES.
2. MISCELLANEOUS PIPING AND INSTRUMENT CONNECTION SIZES ARE AS FOLLOWS, EXCEPT AS INDICATED:
   VENTS & DRAINS = 1"
   PRESSURE CONNECTIONS = 1/2"
   TEMPERATURE CONNECTIONS = 3/4"

| REV. NO. | CAD BY | AUTOCAD DATE | REASON/REVISION BY | APP. BY |
|---|---|---|---|---|

JEA EQUIPMENT SYSTEM DIAGRAM

UNIT: N02 CRAFT: M DRAWING NO.:
GROUP: H - CONDENSATE
SYSTEM: K - FEEDWATER HEATER DRAINS
TITLE:

FILE NAME: M32HK01A.DWG SHT. 1 OF 5

| NO | DATE | REVISIONS AND RECORD OF ISSUE | BY | CHK | APP | FLM |
|---|---|---|---|---|---|---|
| 4 | 08/15/02 | CONFORMED TO CONSTRUCTION RECORDS | TPC | ALC | ALC | |
| 3 | 06/21/01 | GENERAL REVISIONS | DRG | FHT | ALC | |
| 2 | 04/04/01 | GENERAL REVISIONS | WDM | FHT | ALC | |
| 1 | 01/02/01 | GENERAL REVISIONS | WDM | FHT | ALC | |
| 0 | 10/13/00 | RELEASED FOR CONSTRUCTION | WDM | FHT | ALC | |

I HEREBY CERTIFY THAT THIS DOCUMENT WAS PREPARED BY ME OR UNDER MY DIRECT SUPERVISION AND THAT I AM A DULY REGISTERED PROFESSIONAL ENGINEER UNDER THE LAWS OF THE STATE OF FLORIDA.

SIGNED ANTHONY COMPAAN
DATE 10/13/00 REG NO. 45662

BLACK & VEATCH — JEA Building Community

ENGINEER DRG DRAWN FCM
CHECKED DATE 4/7/00

JEA EQUIPMENT NUMBER: N02-HK

JEA DRAWING NUMBER: M32HK01A 1 OF 5

JEA
NORTHSIDE UNITS 1 & 2 REPOWERING PROJECT

HIGH PRESSURE HEATER DRAINS
PIPING AND INSTRUMENT DIAGRAM

PROJECT DRAWING NUMBER: 62713-2HK-M2604 REV: 4

CODE
AREA
M32HK01A

IDL:30124 ACAD 15.05
A1ASL005 C1 1=1
07/12/02 09:52:22

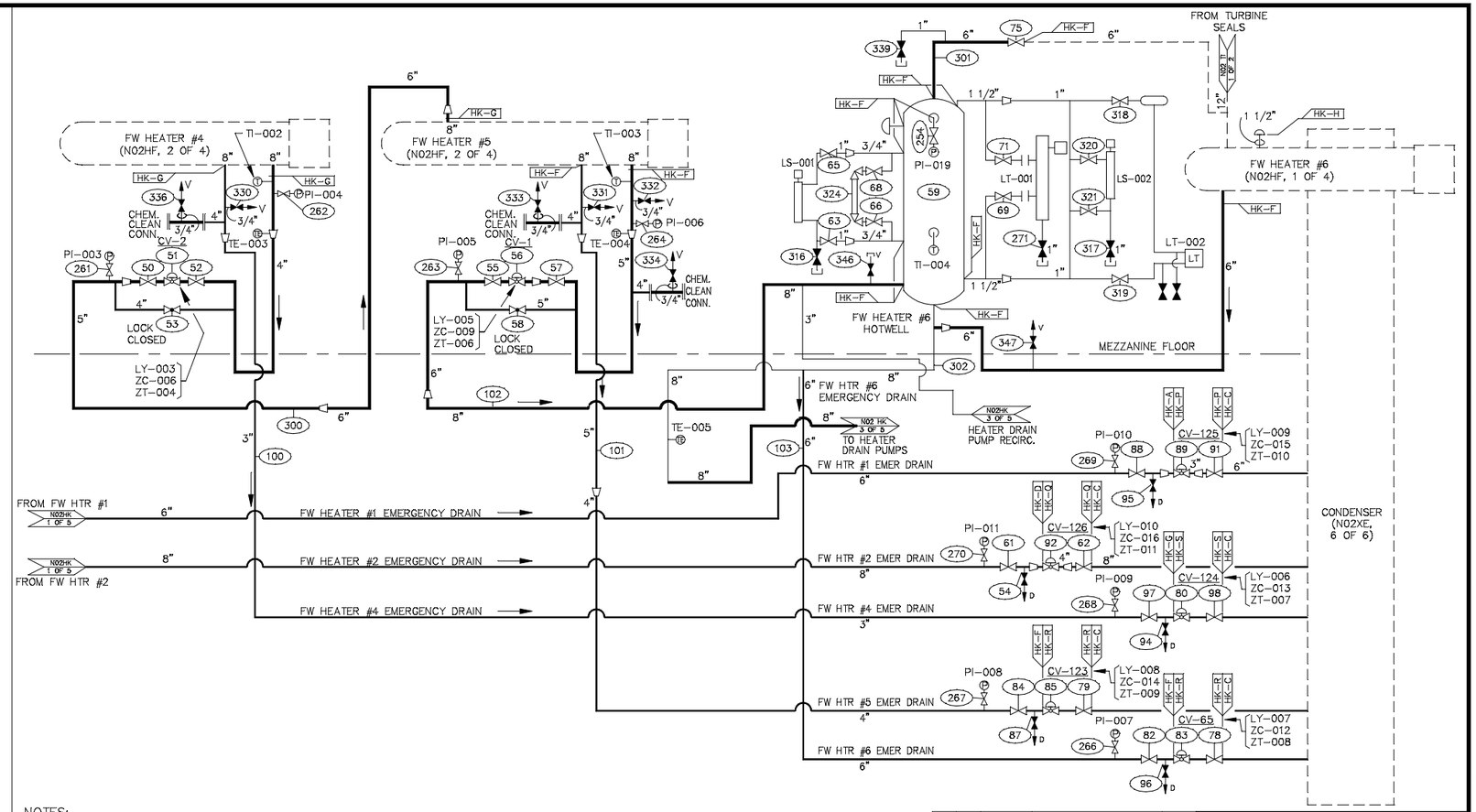


NOTES:

1. SEE PIPELINE LISTS FOR PRESSURES AND TEMPERATURES.
2. MISCELLANEOUS PIPING AND INSTRUMENT CONNECTION SIZES ARE AS FOLLOWS, EXCEPT AS INDICATED:
   VENTS & DRAINS = 1"
   PRESSURE CONNECTIONS = 1/2"
   TEMPERATURE CONNECTIONS = 3/4"

LP FW HEATER CASCADE DRAINS

| REV. NO. | CAD BY | AUTOCAD DATE | REASON/REVISION BY | APP. BY |
|---|---|---|---|---|

JEA EQUIPMENT SYSTEM DIAGRAM

UNIT: N02 CRAFT: M DRAWING NO.:
GROUP: H – CONDENSATE
SYSTEM: K – FEEDWATER HEATER DRAINS
TITLE:
FILE NAME: M32HK02A.DWG SHT. 2 OF 5

| NO | DATE | REVISIONS AND RECORD OF ISSUE | BY | CHK | APP | FLM |
|---|---|---|---|---|---|---|
| 5 | 08/15/02 | CONFORMED TO CONSTRUCTION RECORDS | TPC | ALC | ALC | |
| 4 | 06/27/01 | GENERAL REVISIONS | DRG | FHT | ALC | |
| 3 | 04/04/01 | GENERAL REVISIONS | WDM | FHT | ALC | |
| 2 | 01/23/01 | GENERAL REVISIONS | WDM | FHT | ALC | |
| 1 | 01/02/01 | GENERAL REVISIONS | WDM | FHT | ALC | |
| 0 | 10/13/00 | RELEASED FOR CONSTRUCTION | WDM | DRG | ALC | |

I HEREBY CERTIFY THAT THIS DOCUMENT WAS PREPARED BY ME OR UNDER MY DIRECT SUPERVISION AND THAT I AM A DULY REGISTERED PROFESSIONAL ENGINEER UNDER THE LAWS OF THE STATE OF FLORIDA.
SIGNED ANTHONY COMPAAN
DATE 10/13/00 REG NO. 45662

BLACK & VEATCH — JEA Building Community

ENGINEER FHT DRAWN FCM
CHECKED DRG DATE 09/15/00

JEA EQUIPMENT NUMBER: N02–HK

JEA DRAWING NUMBER: M32HK02A 2 OF 5

JEA
NORTHSIDE UNITS 1 & 2 REPOWERING PROJECT

LOW–PRESSURE HEATER DRAINS
PIPING AND INSTRUMENT DIAGRAM

PROJECT DRAWING NUMBER: 62713–2HK–M2605A REV 5

CODE
AREA
M32HK02A

IDL30124 ACAD 15.05
A1A3L005 C1 1=1
07/12/02 09:53:37

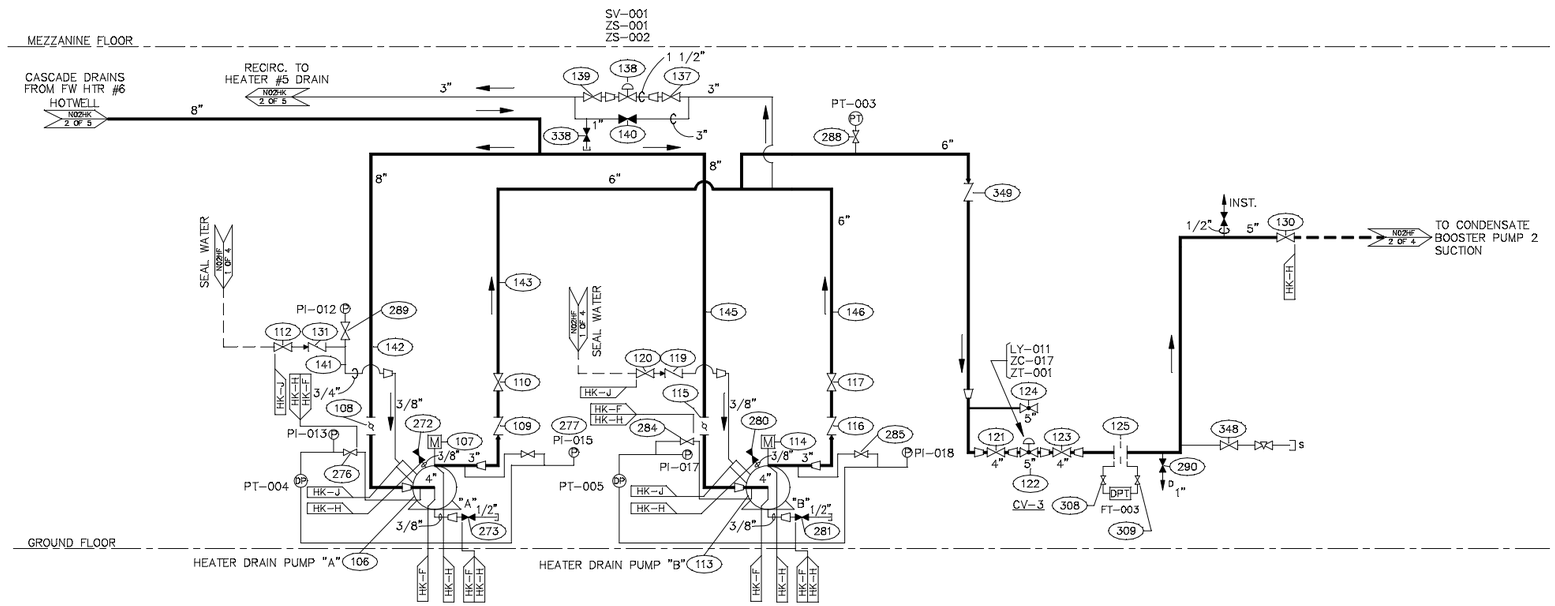


FW HEATERS CASCADE DRAINS

NOTES:

1. SEE PIPELINE LISTS FOR PRESSURES AND TEMPERATURES.
2. MISCELLANEOUS PIPING AND INSTRUMENT CONNECTION SIZES ARE AS FOLLOWS, EXCEPT AS INDICATED:
   VENTS & DRAINS = 1"
   PRESSURE CONNECTIONS = 1/2"
   TEMPERATURE CONNECTIONS = 3/4"

| REV. NO. | CAD BY | AUTOCAD DATE | REASON/REVISION BY | APP. BY |
|---|---|---|---|---|

JEA EQUIPMENT SYSTEM DIAGRAM

UNIT: N02 CRAFT: M DRAWING NO.:
GROUP: H - CONDENSATE
SYSTEM: K - FEEDWATER HEATER DRAINS
TITLE:

FILE NAME: M32HK03A.DWG SHT. 3 OF 5

| NO | DATE | REVISIONS AND RECORD OF ISSUE | BY | CHK | APP | FLM |
|---|---|---|---|---|---|---|
| 4 | 08/15/02 | CONFORMED TO CONSTRUCTION RECORDS | TPC | ALC | ALC | |
| 3 | 07/30/01 | OPEN REVISION | DRG | FHT | ALC | |
| 2 | 03/12/01 | GENERAL REVISIONS | WDM | FHT | ALC | |
| 1 | 01/02/01 | GENERAL REVISIONS | WDM | FHT | ALC | |
| 0 | 10/13/00 | RELEASED FOR CONSTRUCTION | WDM | FHT | ALC | |

I HEREBY CERTIFY THAT THIS DOCUMENT WAS PREPARED BY ME OR UNDER MY DIRECT SUPERVISION AND THAT I AM A DULY REGISTERED PROFESSIONAL ENGINEER UNDER THE LAWS OF THE STATE OF FLORIDA.

SIGNED ANTHONY COMPAAN
DATE 10/13/00 REG NO. 45662

BLACK & VEATCH — JEA Building Community

ENGINEER DRG DRAWN FCM
CHECKED DATE 4/10/00

JEA EQUIPMENT NUMBER: N02-HK

JEA DRAWING NUMBER: M32HK03A 3 OF 5

JEA
NORTHSIDE UNITS 1 & 2 REPOWERING PROJECT

LOW PRESSURE HEATER DRAINS
PIPING AND INSTRUMENT DIAGRAM

PROJECT DRAWING NUMBER: 62713-2HK-M2605B REV 4

CODE
AREA
M32HK03A

IDL30124 ACAD 15.05
A1ASL005 C1 1=1
07/12/02 09:58:15

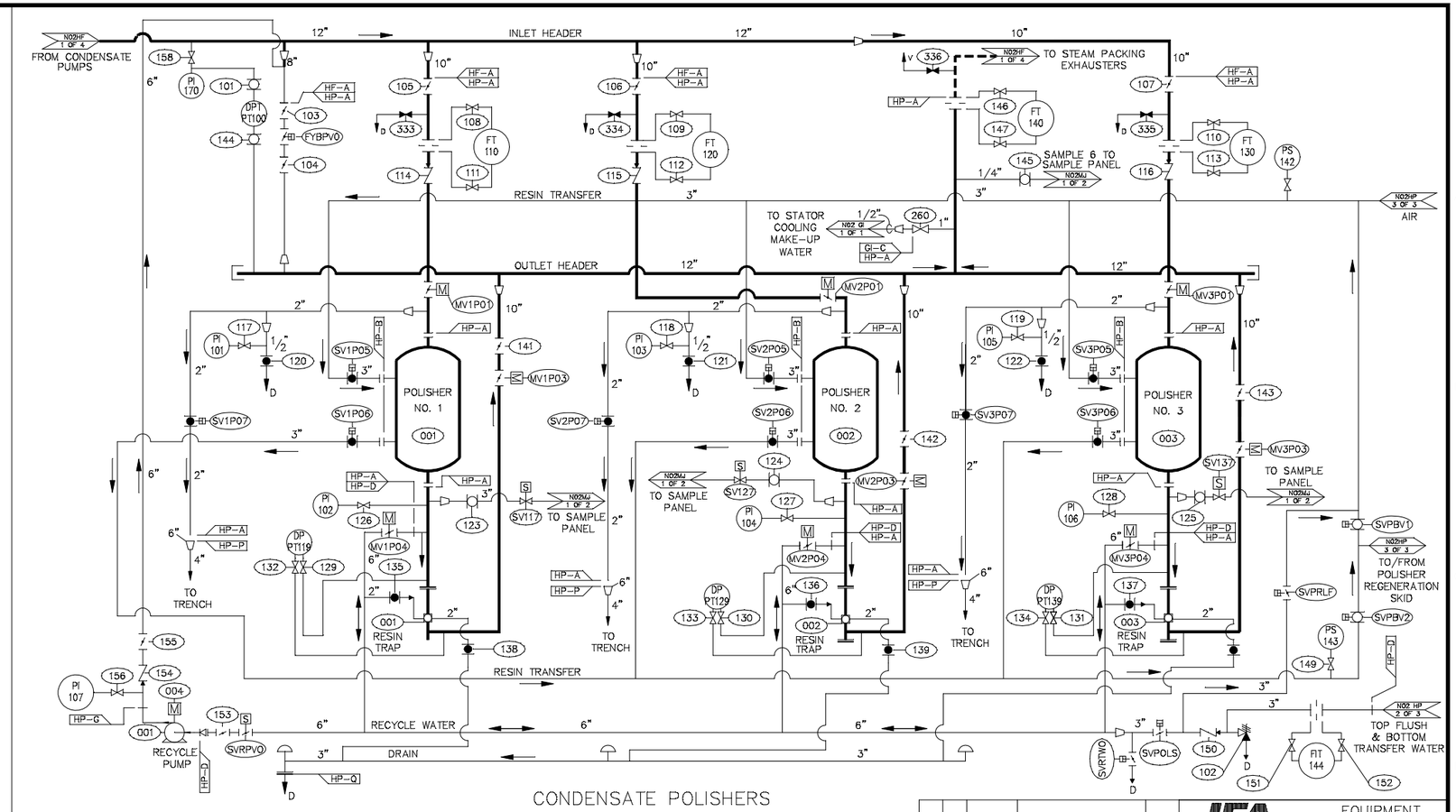


NOTES:

1. DESIGN PRESSURES AND TEMPERATURES WILL BE SHOWN ON THE LINE LIST.
2. MISCELLANEOUS PIPING AND INSTRUMENT CONNECTION SIZES ARE AS FOLLOWS, EXCEPT AS INDICATED:

| | |
|---|---|
| VENTS AND DRAINS | 1 INCH |
| PRESSURE CONNECTIONS | 1/2 INCH |
| TEMPERATURE CONNECTIONS | 3/4 INCH |

| REV NO. | CAD BY | AUTOCAD DATE | REASON/REVISION BY | APP. BY |
|---|---|---|---|---|

JEA EQUIPMENT SYSTEM DIAGRAM

UNIT: N02 CRAFT: M DRAWING NO.:
GROUP: H – CONDENSATE
SYSTEM: P – POLISHERS
TITLE:

FILE NAME: M32HP10A.DWG SHT. 1 OF 3

| NO | DATE | REVISIONS AND RECORD OF ISSUE | BY | CHK | APP | FLM |
|---|---|---|---|---|---|---|
| 4 | 08/15/02 | CONFORMED TO CONSTRUCTION RECORDS | TPC | ALC | ALC | |
| 3 | 04/25/01 | GENERAL REVISIONS | TSA | WDM | ALC | |
| 2 | 01/24/01 | GENERAL REVISIONS | TSA | WDM | ALC | |
| 1 | 9/14/00 | ISSUED FOR CONSTRUCTION | TSA | WDM | ALC | |
| 0 | 8/29/00 | BID ISSUE | TSA | WDM | ALC | |

I HEREBY CERTIFY THAT THIS DOCUMENT WAS PREPARED BY ME OR UNDER MY DIRECT SUPERVISION AND THAT I AM A DULY REGISTERED PROFESSIONAL ENGINEER UNDER THE LAWS OF THE STATE OF FLORIDA.

SIGNED ANTHONY COMPAAN
DATE 9/14/00 REG NO. 45662

BLACK & VEATCH — JEA Building Community

| | | | |
|---|---|---|---|
| ENGINEER | TSA | DRAWN | SLM |
| CHECKED | WDM | DATE | 8/29/00 |

JEA EQUIPMENT NUMBER: N02–HP

JEA DRAWING NUMBER: M32HP10A 1 OF 3

JEA
NORTHSIDE UNITS 1 & 2 REPOWERING PROJECT

PROJECT DRAWING NUMBER: 62713–2HP–M2344A REV: 4

CONDENSATE POLISHING
PIPING AND INSTRUMENT DIAGRAM

CODE
AREA
M32HP10A

ACAD 15.05
C1 1=1
IDL30124 10:12:09
A1/SL005 07/12/02

NOTES:

1. DESIGN PRESSURES AND TEMPERATURES WILL BE SHOWN ON THE LINE LIST.
2. MISCELLANEOUS PIPING AND INSTRUMENT CONNECTION SIZES ARE AS FOLLOWS, EXCEPT AS INDICATED:

| | |
|---|---|
| VENTS AND DRAINS | 1 INCH |
| PRESSURE CONNECTIONS | 1/2 INCH |
| TEMPERATURE CONNECTIONS | 3/4 INCH |

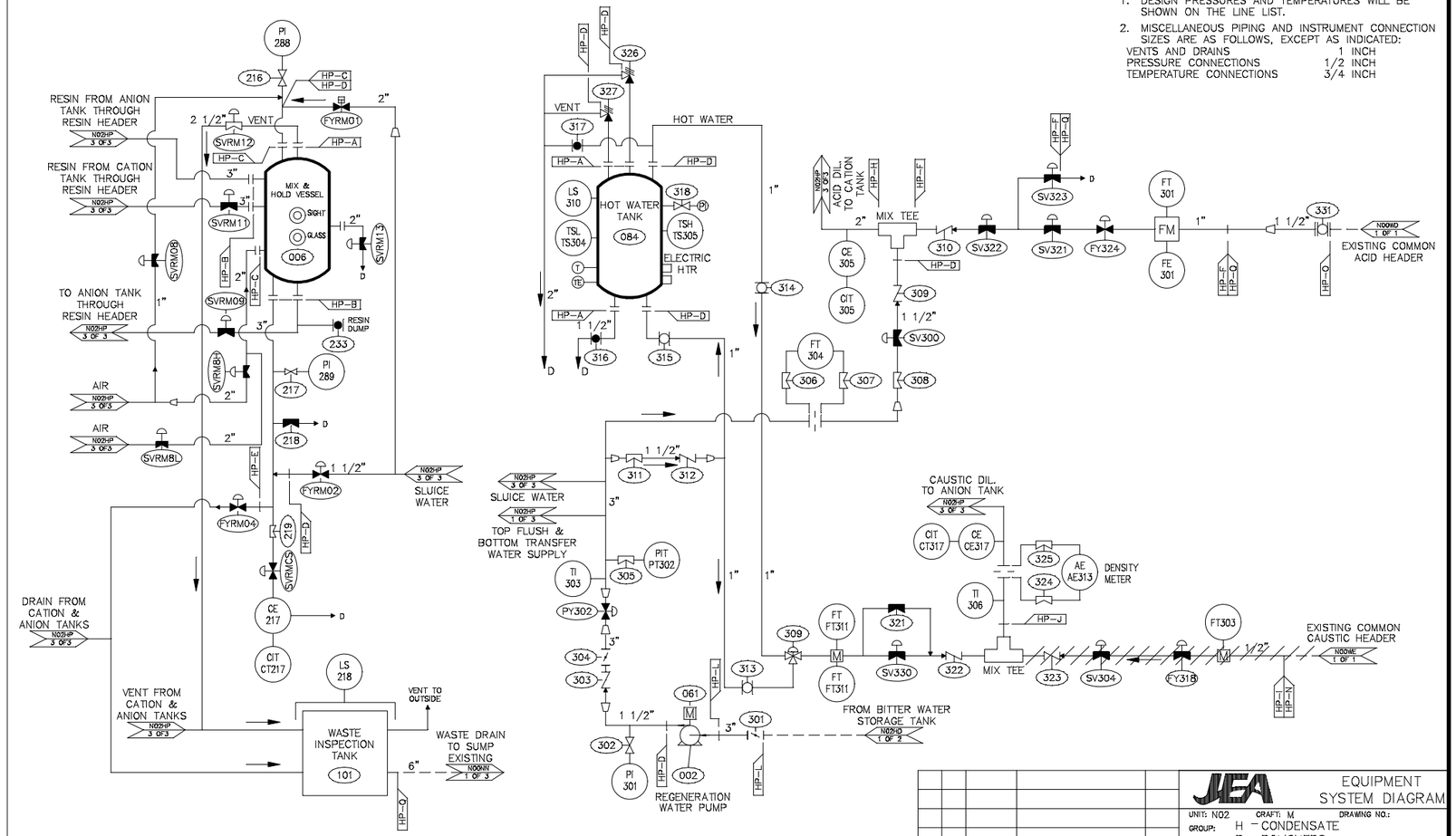


| REV. NO. | CAD BY | AUTOCAD DATE | REASON/REVISION BY | APP. BY |
|---|---|---|---|---|

JEA EQUIPMENT SYSTEM DIAGRAM

UNIT: N02 CRAFT: M DRAWING NO.:
GROUP: H – CONDENSATE
SYSTEM: P – POLISHERS
TITLE:
FILE NAME: M32HP20A.DWG SHT. 2 OF 3

| NO | DATE | REVISIONS AND RECORD OF ISSUE | BY | CHK | APP | FLM |
|---|---|---|---|---|---|---|
| 4 | 08/15/02 | CONFORMED TO CONSTRUCTION RECORDS | TPC | ALC | ALC | |
| 3 | 2/22/01 | GENERAL REVISIONS | TSA | WDM | ALC | |
| 2 | 1/18/01 | GENERAL REVISIONS | TSA | WDM | ALC | |
| 1 | 9/14/00 | ISSUED FOR CONSTRUCTION | TSA | WDM | ALC | |
| 0 | 8/29/00 | BID ISSUE | TSA | WDM | ALC | |

I HEREBY CERTIFY THAT THIS DOCUMENT WAS PREPARED BY ME OR UNDER MY DIRECT SUPERVISION AND THAT I AM A DULY REGISTERED PROFESSIONAL ENGINEER UNDER THE LAWS OF THE STATE OF FLORIDA.

SIGNED ANTHONY COMPAAN
DATE 9/14/00 REG NO. 45662

BLACK & VEATCH — JEA Building Community

ENGINEER TSA | DRAWN SLM
CHECKED WDM | DATE 8/29/00

JEA EQUIPMENT NUMBER: N02–HP

JEA DRAWING NUMBER: M32HP20A 2 OF 3

JEA
NORTHSIDE UNITS 1 & 2 REPOWERING PROJECT

CONDENSATE POLISHING
PIPING AND INSTRUMENT DIAGRAM

PROJECT DRAWING NUMBER: 62713–2HP–M2344B
REV: 4
CODE
AREA
M32HP20A

ID:L30124 A1:SL005 07/12/02 ACAD 15.05 C1 1=1 10:13:51

NOTES:

1. DESIGN PRESSURES AND TEMPERATURES WILL BE SHOWN ON THE LINE LIST.
2. MISCELLANEOUS PIPING AND INSTRUMENT CONNECTION SIZES ARE AS FOLLOWS, EXCEPT AS INDICATED:

| | |
|---|---|
| VENTS AND DRAINS | 1 INCH |
| PRESSURE CONNECTIONS | 1/2 INCH |
| TEMPERATURE CONNECTIONS | 3/4 INCH |

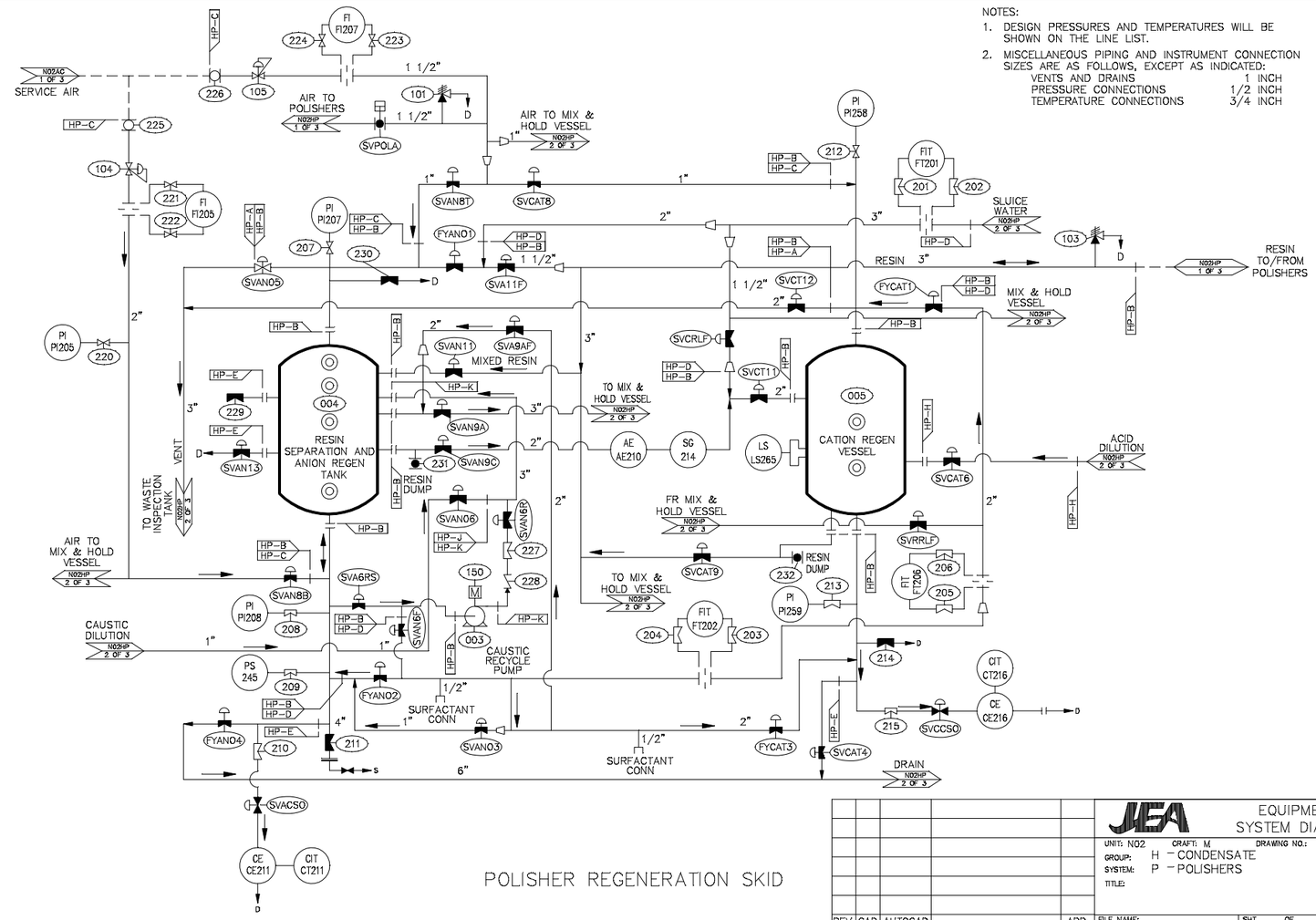


| REV. NO. | CAD BY | AUTOCAD DATE | REASON/REVISION BY | APP. BY |
|---|---|---|---|---|
| | | | | |

JEA EQUIPMENT SYSTEM DIAGRAM

UNIT: N02 CRAFT: M DRAWING NO.:
GROUP: H – CONDENSATE
SYSTEM: P – POLISHERS
TITLE:

FILE NAME: M32HP30A.DWG SHT. 3 OF 3

| NO | DATE | REVISIONS AND RECORD OF ISSUE | BY | CHK | APP | FLM |
|---|---|---|---|---|---|---|
| 3 | 08/15/02 | CONFORMED TO CONSTRUCTION RECORDS | TPC | ALC | ALC | |
| 2 | 01/18/01 | GENERAL REVISION | TSA | WDM | ALC | |
| 1 | 09/14/00 | ISSUED FOR CONSTRUCTION | TSA | WDM | ALC | |
| 0 | 08/29/00 | BID ISSUE | TSA | WDM | ALC | |

I HEREBY CERTIFY THAT THIS DOCUMENT WAS PREPARED BY ME OR UNDER MY DIRECT SUPERVISION AND THAT I AM A DULY REGISTERED PROFESSIONAL ENGINEER UNDER THE LAWS OF THE STATE OF FLORIDA.

SIGNED ANTHONY COMPAAN
DATE 9/14/00 REG NO. 45662

BLACK & VEATCH — JEA Building Community

ENGINEER TSA | DRAWN SLM
CHECKED WDM | DATE 9/29/00

JEA EQUIPMENT NUMBER: N02-HP

JEA DRAWING NUMBER: M32HP30A 3 OF 3

JEA
NORTHSIDE UNITS 1 & 2 REPOWERING PROJECT

CONDENSATE POLISHING
PIPING AND INSTRUMENT DIAGRAM

PROJECT DRAWING NUMBER: 62713-2HP-M2344C
REV: 3
CODE
AREA
M32HP30A

IDL:30124 ACAD 15.05
A1ASL005 C1 1=1
07/12/02 10:15:25

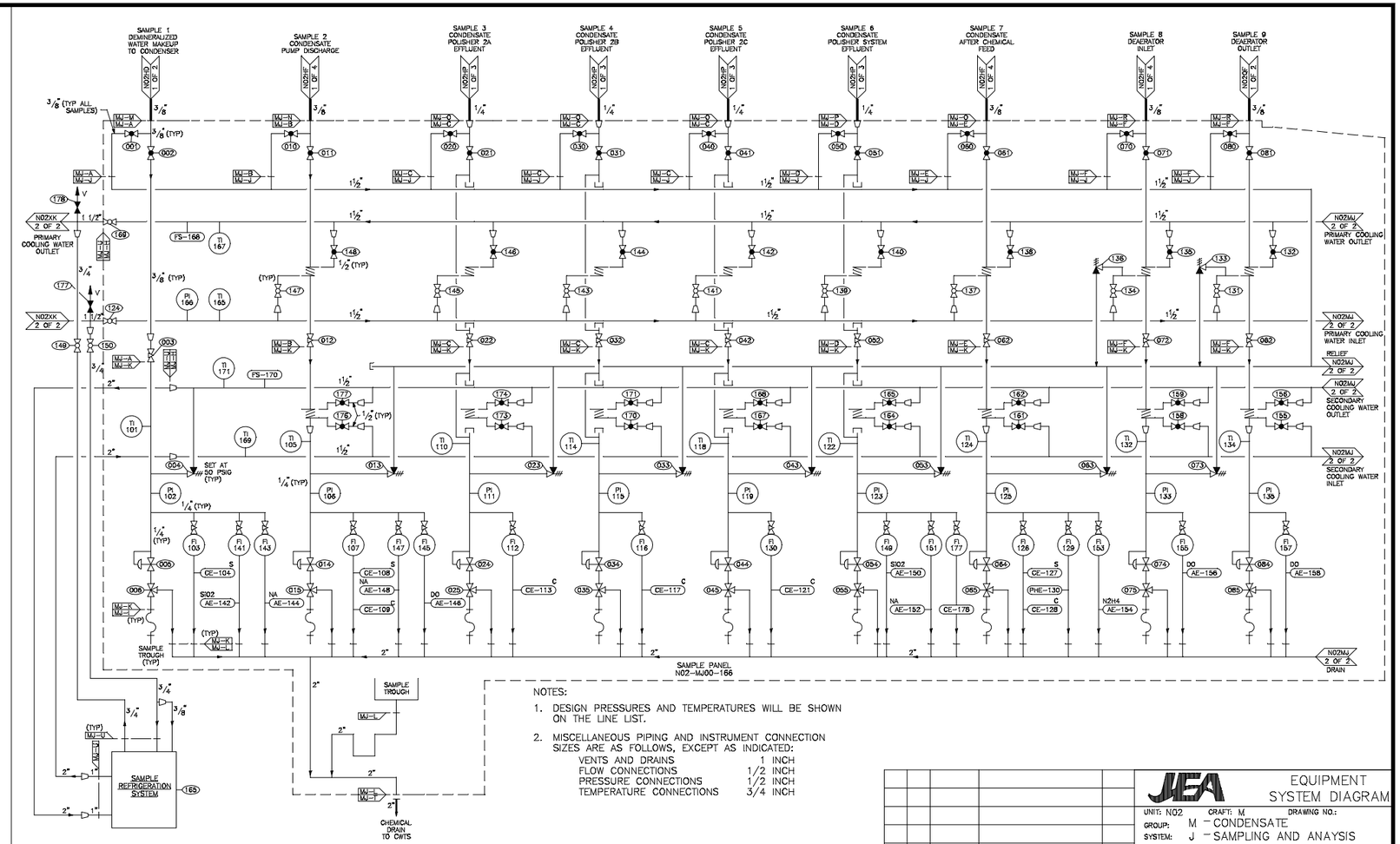


NOTES:

1. DESIGN PRESSURES AND TEMPERATURES WILL BE SHOWN ON THE LINE LIST.
2. MISCELLANEOUS PIPING AND INSTRUMENT CONNECTION SIZES ARE AS FOLLOWS, EXCEPT AS INDICATED:

| | |
|---|---|
| VENTS AND DRAINS | 1 INCH |
| FLOW CONNECTIONS | 1/2 INCH |
| PRESSURE CONNECTIONS | 1/2 INCH |
| TEMPERATURE CONNECTIONS | 3/4 INCH |

JEA EQUIPMENT SYSTEM DIAGRAM

UNIT: N02 CRAFT: M DRAWING NO.:
GROUP: M – CONDENSATE
SYSTEM: J – SAMPLING AND ANAYSIS
TITLE:

| REV. NO. | CAD BY | AUTOCAD DATE | REASON/REVISION BY | APP. BY |
|---|---|---|---|---|

FILE NAME: M32MJ01A.DWG SHT. 1 OF 2

| NO | DATE | REVISIONS AND RECORD OF ISSUE | BY | CHK | APP | FLM |
|---|---|---|---|---|---|---|
| 3 | 08/15/02 | CONFORMED TO CONSTRUCTION RECORDS | TPC | ALC | ALC | |
| 2 | 02/22/01 | GENERAL REVISIONS | WDM | DRG | ALC | |
| 1 | 02/05/01 | GENERAL REVISIONS | WDM | DRG | ALC | |
| 0 | 11/09/00 | RELEASED FOR CONSTRUCTION | WDM | DRG | ALC | |

I HEREBY CERTIFY THAT THIS DOCUMENT WAS PREPARED BY ME OR UNDER MY DIRECT SUPERVISION AND THAT I AM A DULY REGISTERED PROFESSIONAL ENGINEER UNDER THE LAWS OF THE STATE OF FLORIDA.

SIGNED ANTHONY COMPAAN
DATE 11/09/00 REG NO. 45662

BLACK & VEATCH — JEA Building Community

ENGINEER WDM DRAWN FCM
CHECKED DRG DATE 10/19/00

JEA EQUIPMENT NUMBER: N02–MJ

JEA DRAWING NUMBER: M32MJ01A 1 OF 2

JEA
NORTHSIDE UNITS 1 & 2 REPOWERING PROJECT

CONDENSATE SAMPLING AND ANALYSIS
PIPING AND INSTRUMENT DIAGRAM

PROJECT DRAWING NUMBER: 62713–2MJ–M2523A REV: 3

CODE / AREA: M32MJ01A

IDL30124 ACAD 15.05
A1ASL005 C1 1=1
08/16/02 10:43:24

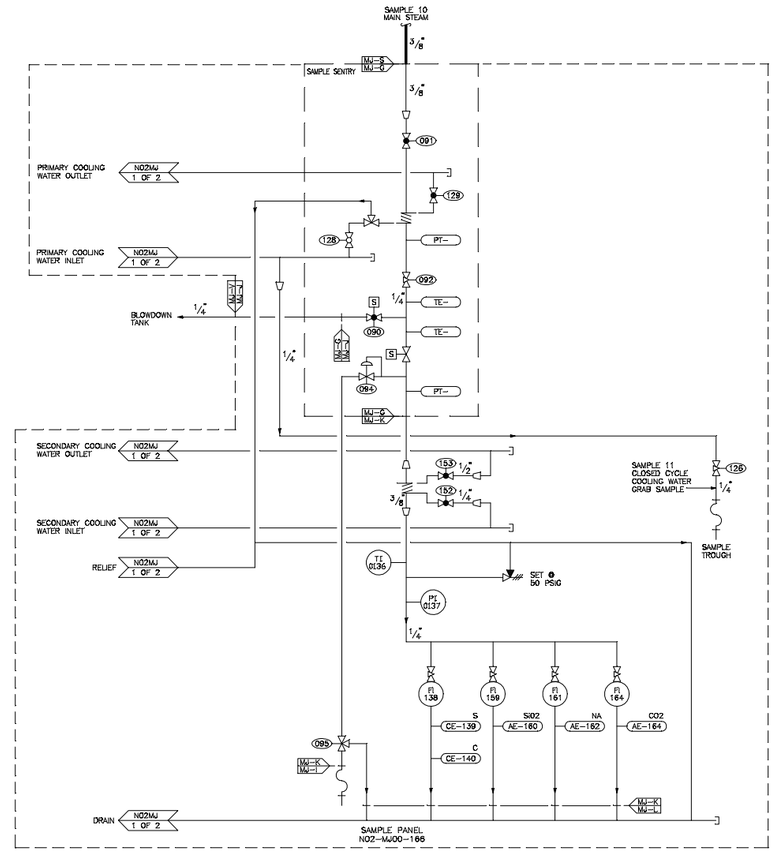


NOTES:

1. DESIGN PRESSURES AND TEMPERATURES WILL BE SHOWN ON THE LINE LISTS.
2. MISCELLANEOUS PIPING AND INSTRUMENT CONNECTION SIZES ARE AS FOLLOWS, EXCEPT AS INDICATED:
   VENTS AND DRAINS = 1"
   PRESSURE CONNECTIONS = 1/2"
   TEMPERATURE CONNECTIONS = 3/4"

| REV. NO. | CAD BY | AUTOCAD DATE | REASON/REVISION BY | APP. BY |
|---|---|---|---|---|
| | | | | |

JEA EQUIPMENT SYSTEM DIAGRAM

UNIT: NO2 CRAFT: M DRAWING NO.:
GROUP: M - SAMPLING AND ANALYSIS
SYSTEM: J - CONDENSATE
TITLE:

FILE NAME: M32MJ02A.DWG SHT. 2 OF 2

| NO | DATE | REVISIONS AND RECORD OF ISSUE | BY | CHK | APP | FLM |
|---|---|---|---|---|---|---|
| 1 | 08/15/02 | CONFORMED TO CONSTRUCTION RECORDS | TPC | ALC | ALC | |
| 0 | 11/09/00 | RELEASED FOR CONSTRUCTION | WDM | DRG | ALC | |

I HEREBY CERTIFY THAT THIS DOCUMENT WAS PREPARED BY ME OR UNDER MY DIRECT SUPERVISION AND THAT I AM A DULY REGISTERED PROFESSIONAL ENGINEER UNDER THE LAWS OF THE STATE OF FLORIDA.

SIGNED ANTHONY COMPAAN
DATE 11/09/00 REG NO. 45662

BLACK & VEATCH
JEA Building Community

ENGINEER WDM DRAWN FCM
CHECKED DRG DATE 10/19/00

JEA EQUIPMENT NUMBER: N02-MJ

JEA DRAWING NUMBER: M32MJ02A 2 OF 2

JEA
NORTHSIDE UNITS 1 & 2 REPOWERING PROJECT

CONDENSATE SAMPLING AND ANALYSIS
PIPING AND INSTRUMENT DIAGRAM

PROJECT DRAWING NUMBER: 62713-2MJ-M2523B REV 1

CODE
AREA
M32MJ02A

IDL30124 ACAD 15.05
A1ASL005 C1 1=1
07/10/02 15:15:00

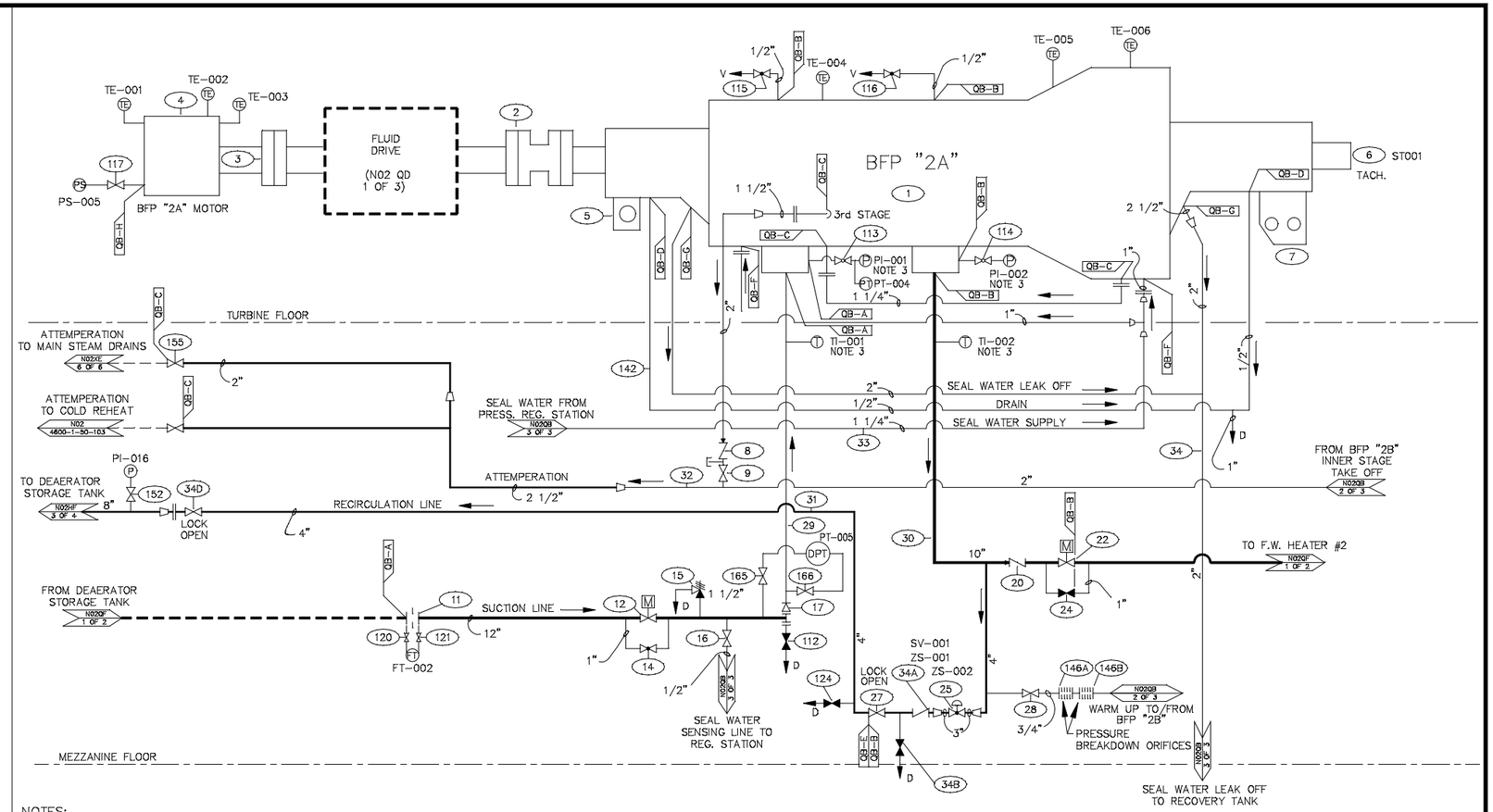


NOTES:

1. DESIGN PRESSURES AND TEMPERATURES WILL BE SHOWN ON THE LINE LISTS.
2. MISCELLANEOUS PIPING AND INSTRUMENT CONNECTION SIZES ARE AS FOLLOWS, EXCEPT AS INDICATED:
   VENTS & DRAINS = 1"
   PRESSURE CONNECTIONS = 1/2"
   TEMPERATURE CONNECTIONS = 3/4"
3. MOUNTED ON LOCAL GAUGE PANEL.

| REV. NO. | CAD BY | AUTOCAD DATE | REASON/REVISION BY | APP. BY |
|---|---|---|---|---|
| | | | | |

JEA EQUIPMENT SYSTEM DIAGRAM

UNITS: N02 CRAFT: M DRAWING NO.:
GROUP: Q - FEEDWATER
SYSTEM: B - BOILER FEED PUMP
TITLE:

FILE NAME: M32QB01A.DWG SHT. 1 OF 3

| NO | DATE | REVISIONS AND RECORD OF ISSUE | BY | CHK | APP | FLM |
|---|---|---|---|---|---|---|
| 4 | 08/15/02 | CONFORMED TO CONSTRUCTION RECORDS | TPC | ALC | ALC | |
| 3 | 03/14/01 | GENERAL REVISIONS | WDM | DRG | ALC | |
| 2 | 01/02/01 | GENERAL REVISIONS | WDM | DRG | ALC | |
| 1 | 10/17/00 | GENERAL REVISIONS | WDM | DRG | ALC | |
| 0 | 5-8-00 | ISSUED FOR CONSTRUCTION | JLB | DRG | ALC | |

I HEREBY CERTIFY THAT THIS DOCUMENT WAS PREPARED BY ME OR UNDER MY DIRECT SUPERVISION AND THAT I AM A DULY REGISTERED PROFESSIONAL ENGINEER UNDER THE LAWS OF THE STATE OF FLORIDA.

SIGNED ANTHONY COMPAAN
DATE 5/10/00 REG NO. 45662

BLACK & VEATCH — JEA Building Community

ENGINEER WM DRAWN JLB
CHECKED DRG DATE 5-5-00

JEA EQUIPMENT NUMBER: N02-QB

JEA DRAWING NUMBER: M32QB01A 1 OF 3

JEA
NORTHSIDE UNITS 1 & 2 REPOWERING PROJECT

FEEDWATER-BOILER FEED PUMP
PIPING AND INSTRUMENT DIAGRAM

PROJECT DRAWING NUMBER: 62713-2QB-M2341A REV 4

CODE
AREA
M32QB01A

ACAD 15.05
C1 1=1
IDL:30124 A1ASL005 07/12/02 11:16:18

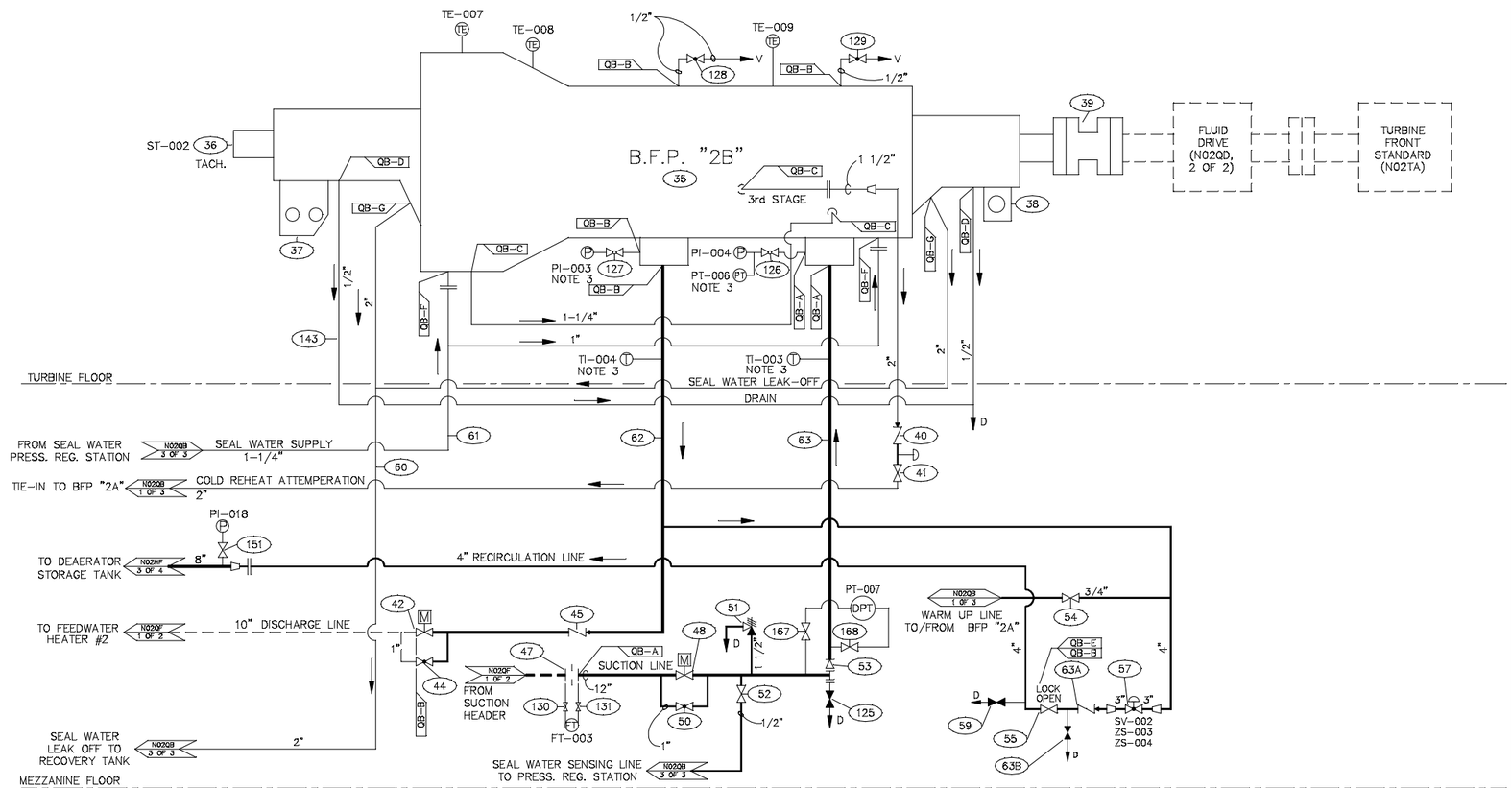


NOTES:

1. DESIGN PRESSURES AND TEMPERATURES WILL BE SHOWN ON THE LINE LISTS.
2. MISCELLANEOUS PIPING AND INSTRUMENT CONNECTION SIZES ARE AS FOLLOWS, EXCEPT AS INDICATED:
   VENTS & DRAINS = 1"
   PRESSURE CONNECTIONS = 1/2"
   TEMPERATURE CONNECTIONS = 3/4"
3. MOUNTED ON LOCAL CONTROL PANEL.

| REV. NO. | CAD BY | AUTOCAD DATE | REASON/REVISION BY | APP. BY |
|---|---|---|---|---|
| | | | | |

JEA EQUIPMENT SYSTEM DIAGRAM

UNIT: N02 CRAFT: M DRAWING NO.:
GROUP: Q - FEEDWATER
SYSTEM: B - BOILER FEED PUMP
TITLE:

FILE NAME: M32QB02A.DWG SHT. 2 OF 3

| NO | DATE | REVISIONS AND RECORD OF ISSUE | BY | CHK | APP | FLM |
|---|---|---|---|---|---|---|
| 3 | 08/15/02 | CONFORMED TO CONSTRUCTION RECORDS | TPC | ALC | ALC | |
| 2 | 02/16/01 | GENERAL REVISIONS | WDM | DRG | ALC | |
| 1 | 10/17/00 | GENERAL REVISIONS | WDM | DRG | ALC | |
| 0 | 5/8/00 | ISSUED FOR CONSTRUCTION | FCM | DRG | ALC | |

I HEREBY CERTIFY THAT THIS DOCUMENT WAS PREPARED BY ME OR UNDER MY DIRECT SUPERVISION AND THAT I AM A DULY REGISTERED PROFESSIONAL ENGINEER UNDER THE LAWS OF THE STATE OF FLORIDA.

SIGNED ANTHONY COMPAAN
DATE 5/10/00 REG NO. 45662

BLACK & VEATCH — JEA Building Community

ENGINEER WM DRAWN FCM
CHECKED DRG DATE 5/5/00

JEA EQUIPMENT NUMBER: N02-QB

JEA DRAWING NUMBER: M32QB02A 2 OF 3

JEA
NORTHSIDE UNITS 1 & 2 REPOWERING PROJECT

FEEDWATER-BOILER FEED PUMP
PIPING AND INSTRUMENT DIAGRAM

PROJECT DRAWING NUMBER: 62713-2QB-M2341B
REV: 3
CODE
AREA
M32QB02A

IDL30124 ACAD 15.05
A1/ASL005 C1 1=1
07/12/02 11:18:30

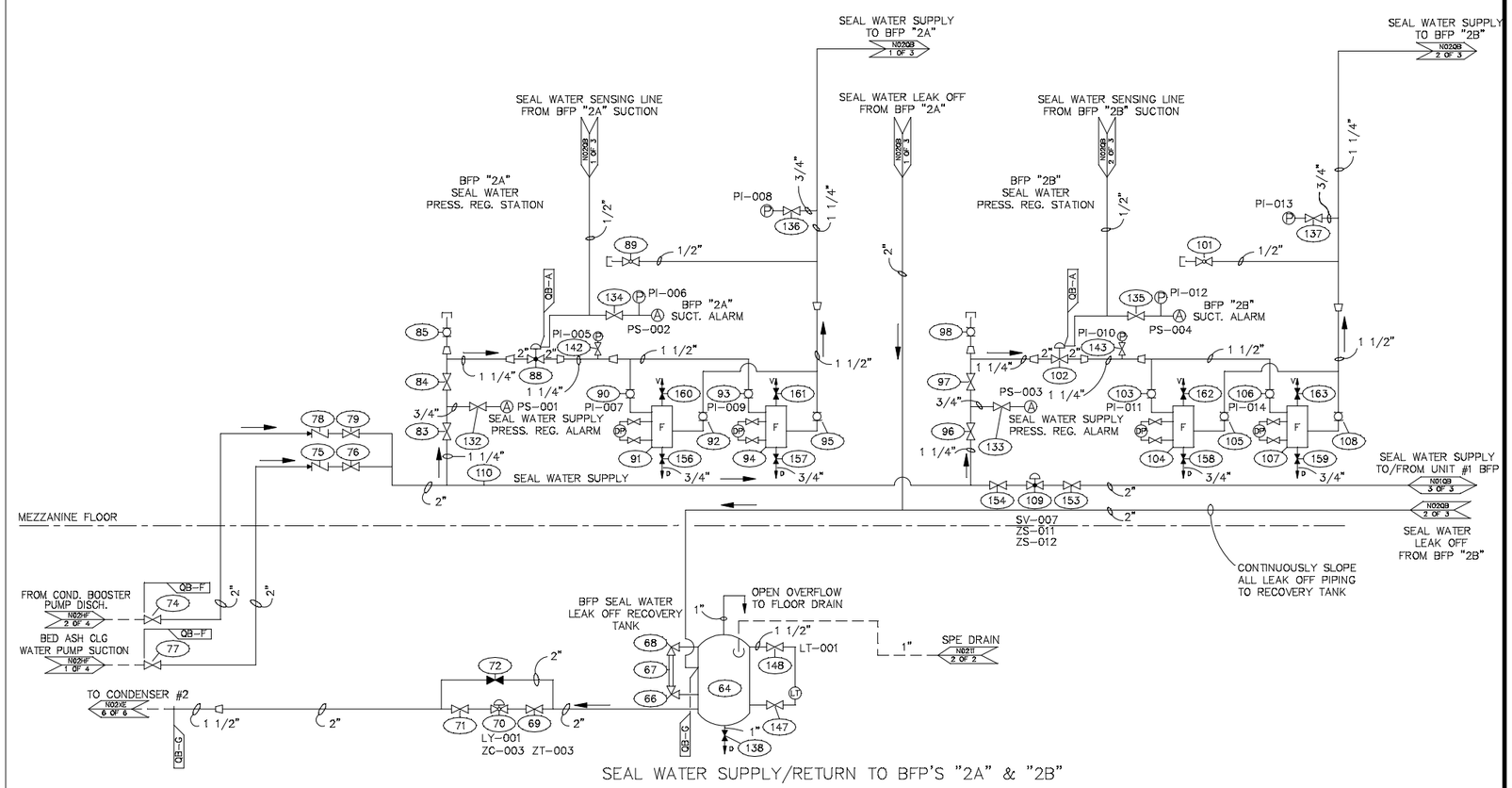


NOTES:

1. DESIGN PRESSURES AND TEMPERATURES WILL BE SHOWN ON THE LINE LISTS.
2. MISCELLANEOUS PIPING AND INSTRUMENT CONNECTION SIZES ARE AS FOLLOWS, EXCEPT AS INDICATED:
   VENTS & DRAINS = 1"
   PRESSURE CONNECTIONS = 1/2"
   TEMPERATURE CONNECTIONS = 3/4"

| REV. NO. | CAD BY | AUTOCAD DATE | REASON/REVISION BY | APP. BY |
|---|---|---|---|---|
| 4 | TPC | 08/15/02 | CONFORMED TO CONSTRUCTION RECORDS | |
| 3 | DRG | 06/21/01 | GENERAL REVISIONS | |
| 2 | WDM | 01/02/01 | GENERAL REVISIONS | |
| 1 | WDM | 10/17/00 | GENERAL REVISIONS | |
| 0 | FCM | 5/8/00 | ISSUED FOR CONSTRUCTION | |

JEA EQUIPMENT SYSTEM DIAGRAM

UNIT: NO2 CRAFT: M DRAWING NO.:
GROUP: Q - FEEDWATER
SYSTEM: B - BOILER FEED PUMP
TITLE:

FILE NAME: M32QB03A.DWG SHT. 3 OF 3

| NO | DATE | REVISIONS AND RECORD OF ISSUE | BY | CHK | APP | FLM |
|---|---|---|---|---|---|---|
| 4 | 08/15/02 | CONFORMED TO CONSTRUCTION RECORDS | TPC | ALC | ALC | |
| 3 | 06/21/01 | GENERAL REVISIONS | DRG | FHT | ALC | |
| 2 | 01/02/01 | GENERAL REVISIONS | WDM | DRG | ALC | |
| 1 | 10/17/00 | GENERAL REVISIONS | WDM | DRG | ALC | |
| 0 | 5/8/00 | ISSUED FOR CONSTRUCTION | FCM | DRG | ALC | |

I HEREBY CERTIFY THAT THIS DOCUMENT WAS PREPARED BY ME OR UNDER MY DIRECT SUPERVISION AND THAT I AM A DULY REGISTERED PROFESSIONAL ENGINEER UNDER THE LAWS OF THE STATE OF FLORIDA.

SIGNED ANTHONY CAMPAAN
DATE 5/10/00 REG NO. 45662

BLACK & VEATCH — JEA Building Community

ENGINEER WM DRAWN FCM
CHECKED DRG DATE 5/5/00

JEA EQUIPMENT NUMBER: NO2-QB

JEA DRAWING NUMBER: M32QB03A 3 OF 3

JEA
NORTHSIDE UNITS 1 & 2 REPOWERING PROJECT

PROJECT DRAWING NUMBER: 62713-2QB-M2341C REV 4

FEEDWATER-BOILER FEED PUMP
PIPING AND INSTRUMENT DIAGRAM

CODE
AREA
M32QB03A

IDL30124 ACAD 15.05
A1/ASL005 C1 1=1
07/12/02 11:19:34

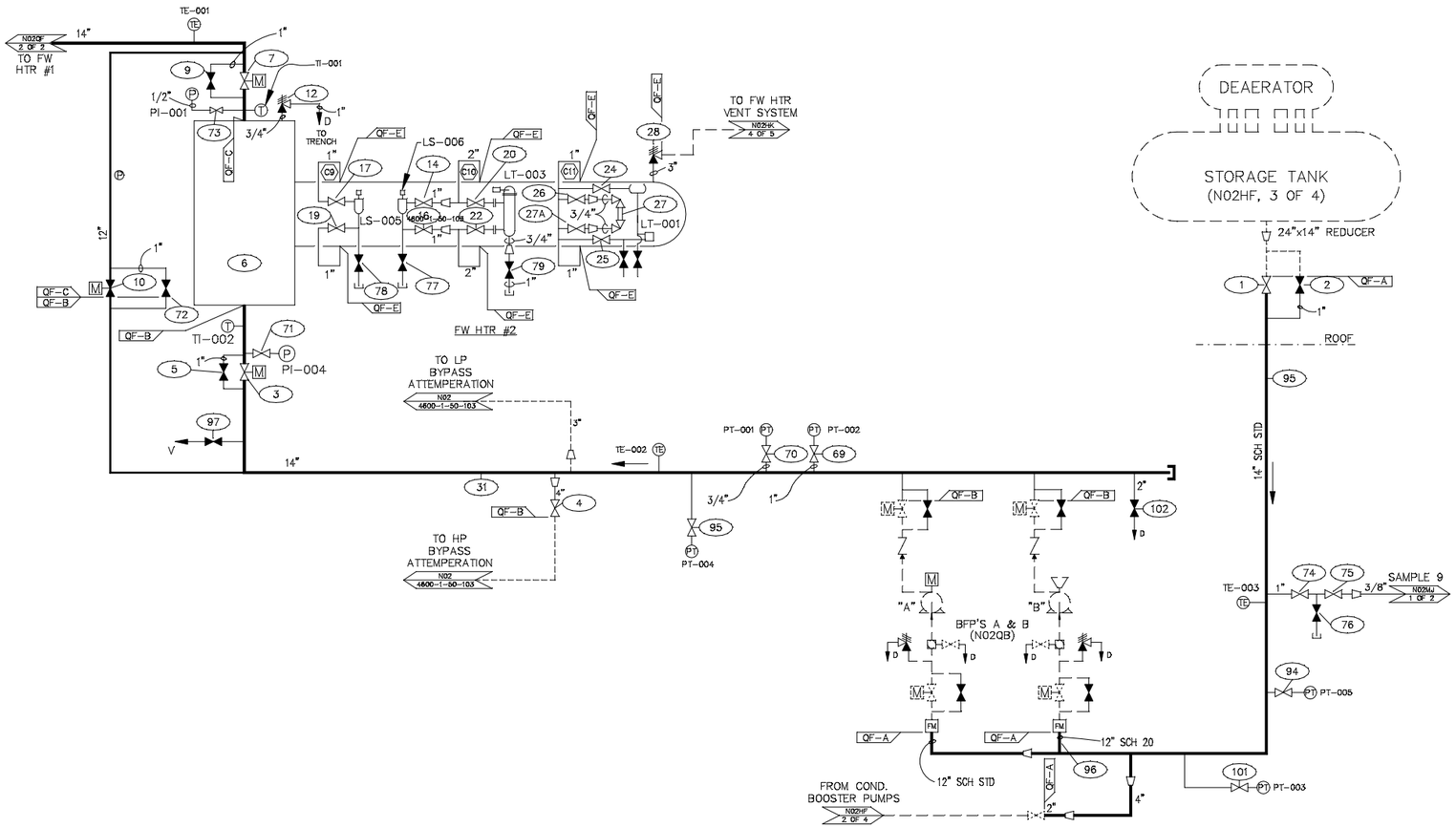


NOTES:

1. DESIGN PRESSURES AND TEMPERATURES WILL BE SHOWN ON THE LINE LISTS.
2. MISCELLANEOUS PIPING AND INSTRUMENT CONNECTION SIZES ARE AS FOLLOWS, EXCEPT AS INDICATED:
   VENTS & DRAINS = 1"
   PRESSURE CONNECTIONS = 1/2"
   TEMPERATURE CONNECTIONS = 3/4"

| REV. NO. | CAD BY | AUTOCAD DATE | REASON/REVISION BY | APP. BY |
|---|---|---|---|---|

JEA EQUIPMENT SYSTEM DIAGRAM

UNIT: N02 CRAFT: M DRAWING NO.:
GROUP: Q - FEEDWATER
SYSTEM: F - FLOW
TITLE:

FILE NAME: M32QF01A.DWG SHT. 1 OF 2

| NO | DATE | REVISIONS AND RECORD OF ISSUE | BY | CHK | APP | FLM |
|---|---|---|---|---|---|---|
| 5 | 08/15/02 | CONFORMED TO CONSTRUCTION RECORDS | TPC | ALC | ALC | |
| 4 | 06/21/01 | GENERAL REVISIONS | DRG | FHT | ALC | |
| 3 | 04/06/01 | GENERAL REVISIONS | WDM | DRG | ALC | |
| 2 | 02/05/01 | GENERAL REVISIONS | WDM | DRG | ALC | |
| 1 | 01/02/01 | GENERAL REVISIONS | WDM | DRG | ALC | |
| 0 | 11/10/00 | RELEASED FOR CONSTRUCTION | WDM | DRG | ALC | |

I HEREBY CERTIFY THAT THIS DOCUMENT WAS PREPARED BY ME OR UNDER MY DIRECT SUPERVISION AND THAT I AM A DULY REGISTERED PROFESSIONAL ENGINEER UNDER THE LAWS OF THE STATE OF FLORIDA.

SIGNED ANTHONY COMPAAN
DATE 11/10/00 REG NO. 45662

BLACK & VEATCH — JEA Building Community

ENGINEER DRG DRAWN FCM
CHECKED DATE 10-20-00

JEA EQUIPMENT NUMBER: N02-QF

JEA DRAWING NUMBER: M32QF01A 1 OF 2

JEA
NORTHSIDE UNITS 1 & 2 REPOWERING PROJECT

BOILER FEED
PIPING AND INSTRUMENT DIAGRAM

PROJECT DRAWING NUMBER: 62713-2QF-M2342A REV 5

CODE
AREA
M32QF01A

IDL30124 ACAD 15.05
A1ASL005 C1 1=1
07/12/02 12:59:17

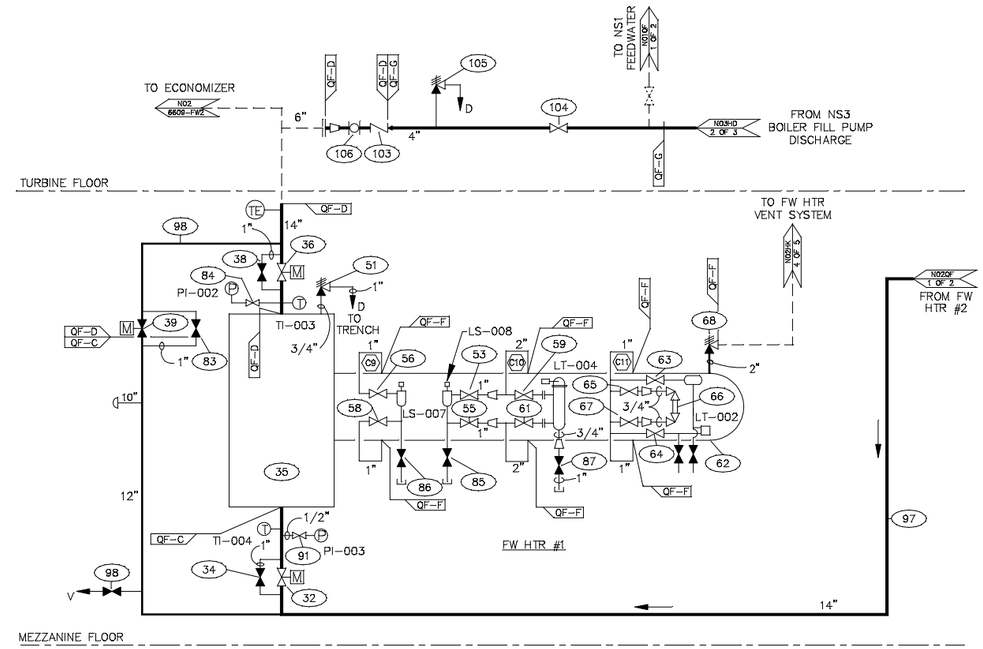


NOTES:

1. DESIGN PRESSURES AND TEMPERATURES WILL BE SHOWN ON THE LINE LISTS.
2. MISCELLANEOUS PIPING AND INSTRUMENT CONNECTION SIZES ARE AS FOLLOWS, EXCEPT AS INDICATED:
   VENTS & DRAINS = 1"
   PRESSURE CONNECTIONS = 1/2"
   TEMPERATURE CONNECTIONS = 3/4"

| REV. NO. | CAD BY | AUTOCAD DATE | REASON/REVISION BY | APP. BY |
|---|---|---|---|---|
| | | | | |

JEA EQUIPMENT SYSTEM DIAGRAM

UNIT: N02 CRAFT: M DRAWING NO.:
GROUP: Q - FEEDWATER
SYSTEM: F - FLOW
TITLE:

FILE NAME: M32QF02A.DWG SHT. 2 OF 2

| NO | DATE | REVISIONS AND RECORD OF ISSUE | BY | CHK | APP | FLM |
|---|---|---|---|---|---|---|
| 6 | 08/15/02 | CONFORMED TO CONSTRUCTION RECORDS | TPC | ALC | ALC | |
| 5 | 06/21/01 | GENERAL REVISIONS | DRG | FHT | ALC | |
| 4 | 06/11/01 | GENERAL REVISIONS | DRG | FHT | ALC | |
| 3 | 05/04/01 | GENERAL REVISIONS | FHT | DRG | ALC | |
| 2 | 02/22/01 | GENERAL REVISIONS | WDM | DRG | ALC | |
| 1 | 01/23/01 | GENERAL REVISIONS | WDM | DRG | ALC | |
| 0 | 11/10/00 | RELEASED FOR CONSTRUCTION | WDM | DRG | ALC | |

I HEREBY CERTIFY THAT THIS DOCUMENT WAS PREPARED BY ME OR UNDER MY DIRECT SUPERVISION AND THAT I AM A DULY REGISTERED PROFESSIONAL ENGINEER UNDER THE LAWS OF THE STATE OF FLORIDA.

SIGNED ANTHONY COMPAAN
DATE 11/10/00 REG NO. 45662

BLACK & VEATCH — JEA Building Community

ENGINEER DRG DRAWN JLB
CHECKED DATE 10-20-00

JEA EQUIPMENT NUMBER: N02-QF

JEA DRAWING NUMBER: M32QF02A 2 OF 2

JEA
NORTHSIDE UNITS 1 & 2 REPOWERING PROJECT

PROJECT DRAWING NUMBER: 62713-2QF-M2342B REV 6

BOILER FEED
PIPING AND INSTRUMENT DIAGRAM

CODE
AREA
M32QF02A

IDL30124 ACAD 15.05
A1ASL005 C1 1=1
07/12/02 13:00:31

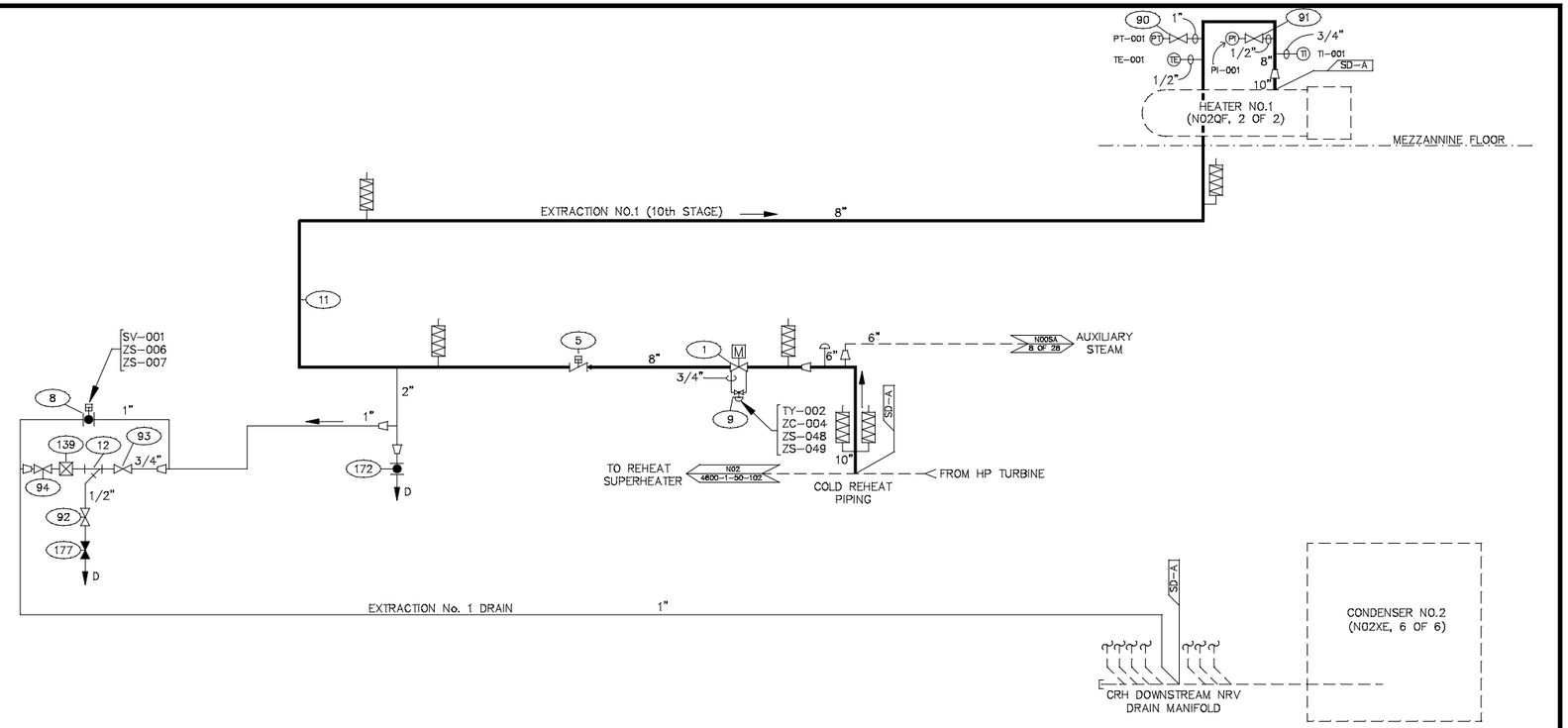


HIGH PRESSURE EXTRACTION LINE

NOTES:

1. SEE PIPELINE LISTS FOR PRESSURES AND TEMPERATURES.
2. MISCELLANEOUS PIPING AND INSTRUMENT CONNECTION SIZES ARE AS FOLLOWS, EXCEPT AS INDICATED:
   VENTS & DRAINS = 1"
   PRESSURE CONNECTIONS = 1/2"
   TEMPERATURE CONNECTIONS = 3/4"

| REV. NO. | CAD BY | AUTOCAD DATE | REASON/REVISION BY | APP. BY |
|---|---|---|---|---|
| | | | | |

JEA EQUIPMENT SYSTEM DIAGRAM

UNIT: N02 CRAFT: M DRAWING NO.:
GROUP: S - STEAM
SYSTEM: D - EXTRACTION PIPING
TITLE:

FILE NAME: M32SD01A.DWG SHT. 1 OF 3

| NO | DATE | REVISIONS AND RECORD OF ISSUE | BY | CHK | APP | FLM |
|---|---|---|---|---|---|---|
| 5 | 08/15/02 | CONFORMED TO CONSTRUCTION RECORDS | TPC | ALC | ALC | |
| 4 | 08-06-01 | GENERAL REVISIONS | FHT | DRG | ALC | |
| 3 | 05-18-01 | GENERAL REVISIONS | FHT | TPC | ALC | |
| 2 | 04-25-01 | GENERAL REVISIONS | FHT | WDM | ALC | |
| 1 | 10-2-00 | GENERAL REVISIONS | FHT | WDM | ALC | |
| 0 | 6-19-00 | ISSUED FOR CONSTRUCTION | FCM | DRG | ALC | |

I HEREBY CERTIFY THAT THIS DOCUMENT WAS PREPARED BY ME OR UNDER MY DIRECT SUPERVISION AND THAT I AM A DULY REGISTERED PROFESSIONAL ENGINEER UNDER THE LAWS OF THE STATE OF FLORIDA.

SIGNED ANTHONY COMPAAN
DATE 6-22-00 REG NO. 45662

BLACK & VEATCH — JEA Building Community

ENGINEER WDM DRAWN FCM
CHECKED DRG DATE 6-19-00

JEA EQUIPMENT NUMBER: N02-SD

JEA DRAWING NUMBER: M32SD01A 1 OF 3

JEA
NORTHSIDE UNITS 1 & 2 REPOWERING PROJECT

HIGH PRESSURE EXTRACTION
PIPING AND INSTRUMENT DIAGRAM

PROJECT DRAWING NUMBER: 62713-2SD-M2601A REV: 5

CODE
AREA
M32SD01A

IDL30124 ACAD 15.05
A1ASL005 C1 1=1
07/12/02 13:04:27

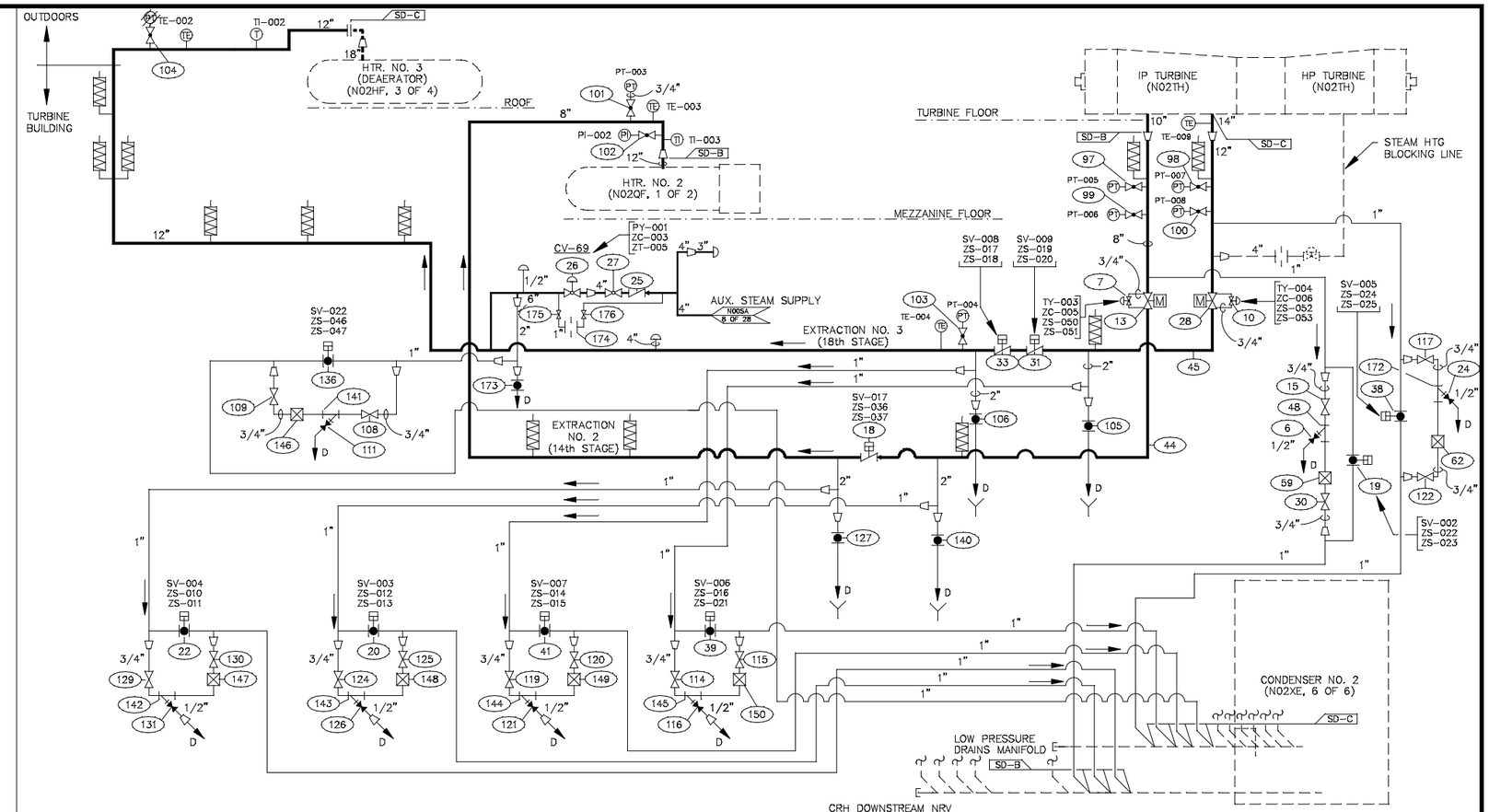


NOTES:
1. SEE PIPELINE LISTS FOR PRESSURES AND TEMPERATURES.
2. MISCELLANEOUS PIPING AND INSTRUMENT CONNECTION SIZES ARE AS FOLLOWS, EXCEPT AS INDICATED:
   VENTS & DRAINS = 1"
   PRESSURE CONNECTIONS = 1/2"
   TEMPERATURE CONNECTIONS = 3/4"

| REV. NO. | CAD BY | AUTOCAD DATE | REASON/REVISION BY | APP. BY |
|---|---|---|---|---|
| 6 | TPC | 08/15/02 | CONFORMED TO CONSTRUCTION RECORDS | ALC / ALC |
| 5 | FHT | 08/06/01 | GENERAL REVISIONS | DRG / ALC |
| 4 | FHT | 05/18/01 | GENERAL REVISIONS | DRG / ALC |
| 3 | FHT | 02/22/01 | GENERAL REVISIONS | WDM / ALC |
| 2 | FHT | 01/02/01 | GENERAL REVISIONS | WDM / ALC |
| 1 | FHT | 10-2-00 | GENERAL REVISIONS | WDM / ALC |
| 0 | FCM | 6-19-00 | ISSUED FOR CONSTRUCTION | DRG / ALC |
| NO | BY | DATE | REVISIONS AND RECORD OF ISSUE | CHK / APP / FLM |

JEA EQUIPMENT SYSTEM DIAGRAM

UNIT: N02 CRAFT: M DRAWING NO.:
GROUP: S - STEAM
SYSTEM: D - EXTRACTION PIPING
TITLE:
FILE NAME: M32SD02A.DWG SHT. 2 OF 3

I HEREBY CERTIFY THAT THIS DOCUMENT WAS PREPARED BY ME OR UNDER MY DIRECT SUPERVISION AND THAT I AM A DULY REGISTERED PROFESSIONAL ENGINEER UNDER THE LAWS OF THE STATE OF FLORIDA.
SIGNED ANTHONY COMPAAN
DATE 6-22-00 REG NO. 45662

BLACK & VEATCH — JEA Building Community

ENGINEER WDM DRAWN FCM
CHECKED DRG DATE 6-16-00

JEA EQUIPMENT NUMBER: N02-SD

JEA DRAWING NUMBER: M32SD02A 2 OF 3

JEA
NORTHSIDE UNITS 1 & 2 REPOWERING PROJECT

HIGH PRESSURE EXTRACTION PIPING AND INSTRUMENT DIAGRAM

PROJECT DRAWING NUMBER: 62713-2SD-M2601B REV 6

CODE / AREA: M32SD02A

ID:J30124 A1:SL005 07/12/02 ACAD 15.05 C1 1=1 13:05:39

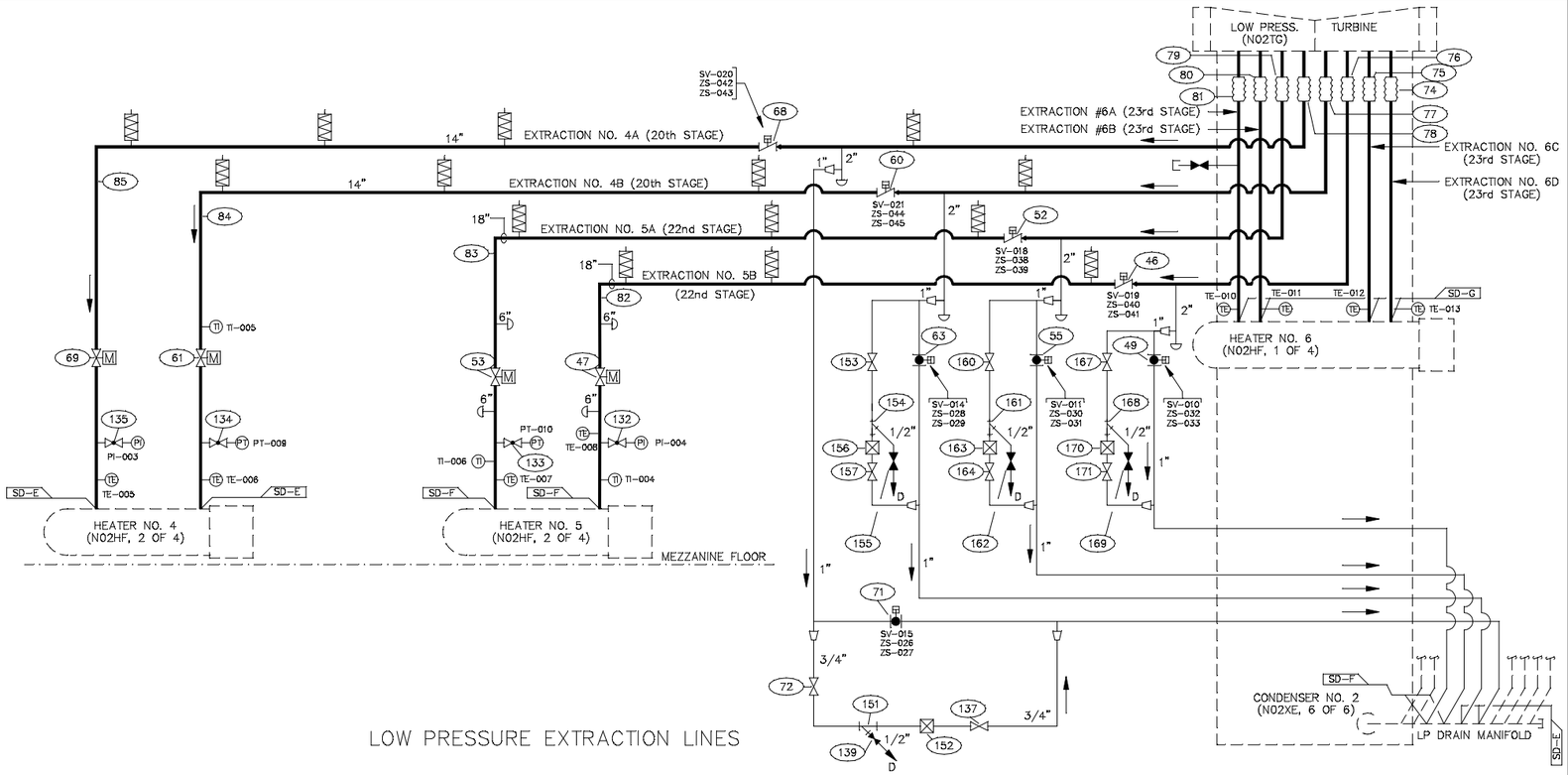


LOW PRESSURE EXTRACTION LINES

NOTES:

1. SEE PIPELINE LISTS FOR PRESSURES AND TEMPERATURES.
2. MISCELLANEOUS PIPING AND INSTRUMENT CONNECTION SIZES ARE AS FOLLOWS, EXCEPT AS INDICATED:
   VENTS & DRAINS = 1"
   PRESSURE CONNECTIONS = 1/2"
   TEMPERATURE CONNECTIONS = 3/4"

| REV. NO. | CAD BY | AUTOCAD DATE | REASON/REVISION BY | APP. BY |
|---|---|---|---|---|
| | | | | |

JEA EQUIPMENT SYSTEM DIAGRAM

UNIT: N02 CRAFT: M DRAWING NO.:
GROUP: S - STEAM
SYSTEM: D - EXTRACTION PIPING
TITLE:

FILE NAME: M32SD03A.DWG SHT. 3 OF 3

| NO | DATE | REVISIONS AND RECORD OF ISSUE | BY | CHK | APP | FLM |
|---|---|---|---|---|---|---|
| 5 | 08/15/02 | CONFORMED TO CONSTRUCTION RECORDS | TPC | ALC | ALC | |
| 4 | 08-06-01 | GENERAL REVISIONS | FHT | DRG | ALC | |
| 3 | 05-18-01 | GENERAL REVISIONS | FHT | DRG | ALC | |
| 2 | 01/02/01 | GENERAL REVISIONS | FHT | WDM | ALC | |
| 1 | 10-2-00 | GENERAL REVISIONS | FHT | WDM | ALC | |
| 0 | 6-19-00 | ISSUED FOR CONSTRUCTION | WDM | DRG | ALC | |

I HEREBY CERTIFY THAT THIS DOCUMENT WAS PREPARED BY ME OR UNDER MY DIRECT SUPERVISION AND THAT I AM A DULY REGISTERED PROFESSIONAL ENGINEER UNDER THE LAWS OF THE STATE OF FLORIDA.

SIGNED ANTHONY COMPAAN
DATE 6-22-00 REG NO. 45662

BLACK & VEATCH — JEA Building Community

ENGINEER WDM DRAWN FCM
CHECKED DRG DATE 6-19-00

JEA EQUIPMENT NUMBER: N02-SD

JEA DRAWING NUMBER: M32SD03A 3 OF 3

JEA
NORTHSIDE UNITS 1 & 2 REPOWERING PROJECT

PROJECT DRAWING NUMBER: 62713-2SD-M2602 REV 5

LOW PRESSURE EXTRACTION PIPING AND INSTRUMENT DIAGRAM

CODE / AREA: M32SD03A

IDL30124 A1ASL005 07/10/02 15:22:18 C1 1=1 ACAD 15.05

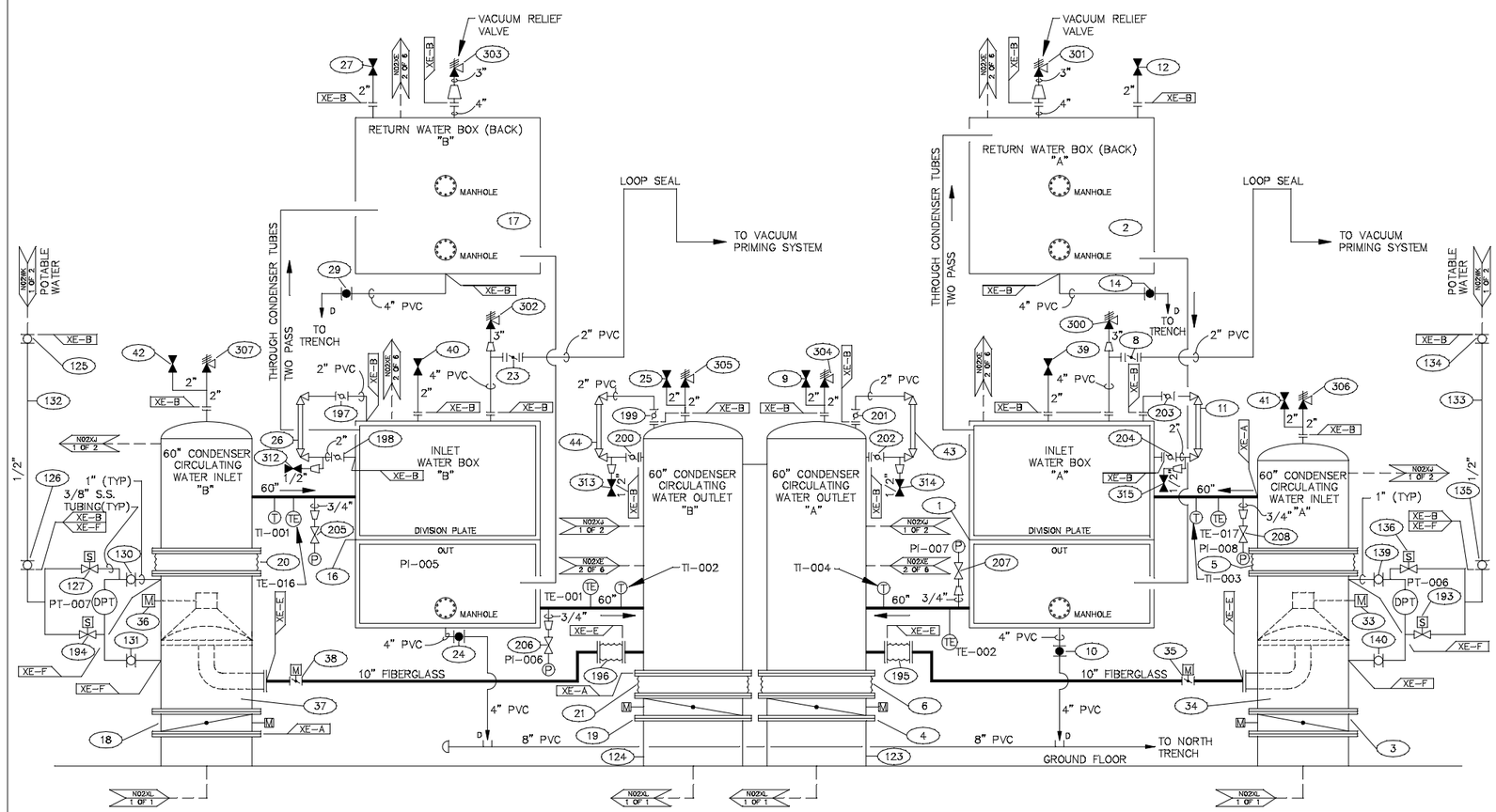


NOTES:

1. SEE PIPELINE LISTS FOR PRESSURES AND TEMPERATURES.
2. MISCELLANEOUS PIPING AND INSTRUMENT CONNECTION SIZES ARE AS FOLLOWS, EXCEPT AS INDICATED:
   VENTS & DRAINS = 1"
   PRESSURE CONNECTIONS = 1/2"
   TEMPERATURE CONNECTIONS = 3/4"

| REV. NO. | CAD BY | AUTOCAD DATE | REASON/REVISION BY | APP. BY |
|---|---|---|---|---|

JEA EQUIPMENT SYSTEM DIAGRAM

UNIT: N02 CRAFT: M DRAWING NO.:
GROUP: X - COOLING WATER
SYSTEM: E - CONDENSER
TITLE:
FILE NAME: M32XE01A.DWG SHT. 1 OF 6

| NO | DATE | REVISIONS AND RECORD OF ISSUE | BY | CHK | APP | FLM |
|---|---|---|---|---|---|---|
| 3 | 08/15/02 | CONFORMED TO CONSTRUCTION RECORDS | TPC | ALC | ALC | |
| 2 | 08/07/01 | GENERAL REVISIONS | WDM | FHT | ALC | |
| 1 | 03/12/01 | GENERAL REVISIONS | WDM | FHT | ALC | |
| 0 | 12/29/00 | RELEASED FOR CONSTRUCTION | WDM | FHT | ALC | |

I HEREBY CERTIFY THAT THIS DOCUMENT WAS PREPARED BY ME OR UNDER MY DIRECT SUPERVISION AND THAT I AM A DULY REGISTERED PROFESSIONAL ENGINEER UNDER THE LAWS OF THE STATE OF FLORIDA.

SIGNED ANTHONY COMPAAN
DATE 12/29/00 REG NO. 45662

BLACK & VEATCH — JEA Building Community

ENGINEER FHT DRAWN FCM
CHECKED WDM DATE 4/10/00

JEA EQUIPMENT NUMBER: N02-XE

JEA DRAWING NUMBER: M32XE01A 1 OF 6

JEA
NORTHSIDE UNITS 1 & 2 REPOWERING PROJECT

CONDENSER
PIPING AND INSTRUMENT DIAGRAM

PROJECT DRAWING NUMBER: 62713-2XE-M2264A
REV: 3
CODE
AREA
M32XE01A

ID:L30124 C1 1=1 ACAD 15.05
A1:SL005 08/16/02 10:50:20

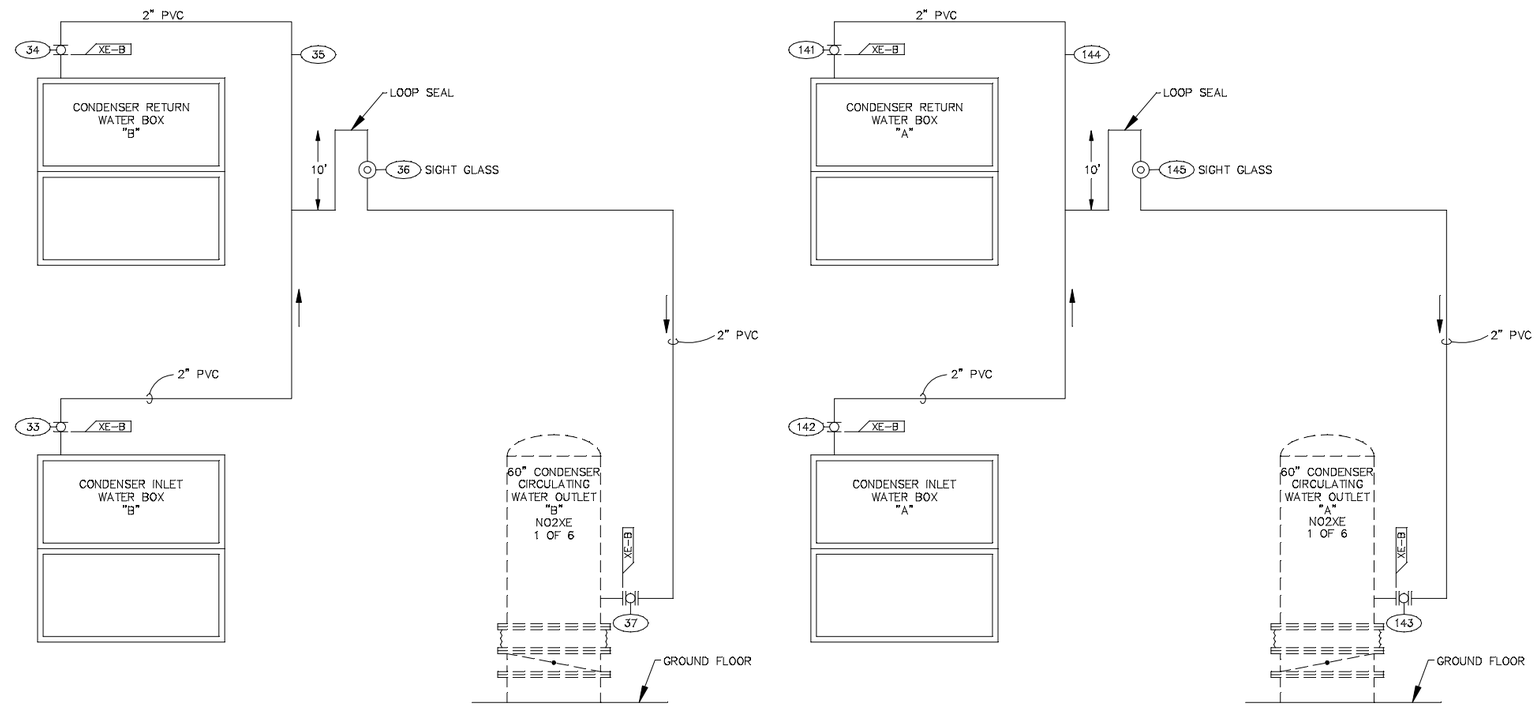


NOTES:

1. SEE PIPELINE LISTS FOR PRESSURES AND TEMPERATURES.

| REV. NO. | CAD BY | AUTOCAD DATE | REASON/REVISION BY | APP. BY |
|---|---|---|---|---|
| | | | | |

JEA EQUIPMENT SYSTEM DIAGRAM

UNIT: N02 CRAFT: M DRAWING NO.:
GROUP: X - COOLING WATER
SYSTEM: E - CONDENSER
TITLE:

FILE NAME: M32XE02A.DWG SHT. 2 OF 6

| NO | DATE | REVISIONS AND RECORD OF ISSUE | BY | CHK | APP | FLM |
|---|---|---|---|---|---|---|
| 1 | 08/15/02 | CONFORMED TO CONSTRUCTION RECORDS | TPC | ALC | ALC | |
| 0 | 12/29/00 | RELEASED FOR CONSTRUCTION | WDM | FHT | ALC | |

I HEREBY CERTIFY THAT THIS DOCUMENT WAS PREPARED BY ME OR UNDER MY DIRECT SUPERVISION AND THAT I AM A DULY REGISTERED PROFESSIONAL ENGINEER UNDER THE LAWS OF THE STATE OF FLORIDA.

SIGNED ANTHONY COMPAAN
DATE 12/29/00 REG NO. 45662

BLACK & VEATCH — JEA Building Community

ENGINEER FHT DRAWN FCM
CHECKED WDM DATE 4/10/00

JEA EQUIPMENT NUMBER: N02-XE

JEA DRAWING NUMBER: M32XE02A 2 OF 6

JEA
NORTHSIDE UNITS 1 & 2 REPOWERING PROJECT

PROJECT DRAWING NUMBER: 62713-2XE-M2264B REV 1

CONDENSER
PIPING AND INSTRUMENT DIAGRAM

CODE
AREA
M32XE02A

IDL30124 ACAD 15.05
A1ASL005 C1 1=1
07/12/02 14:26:33

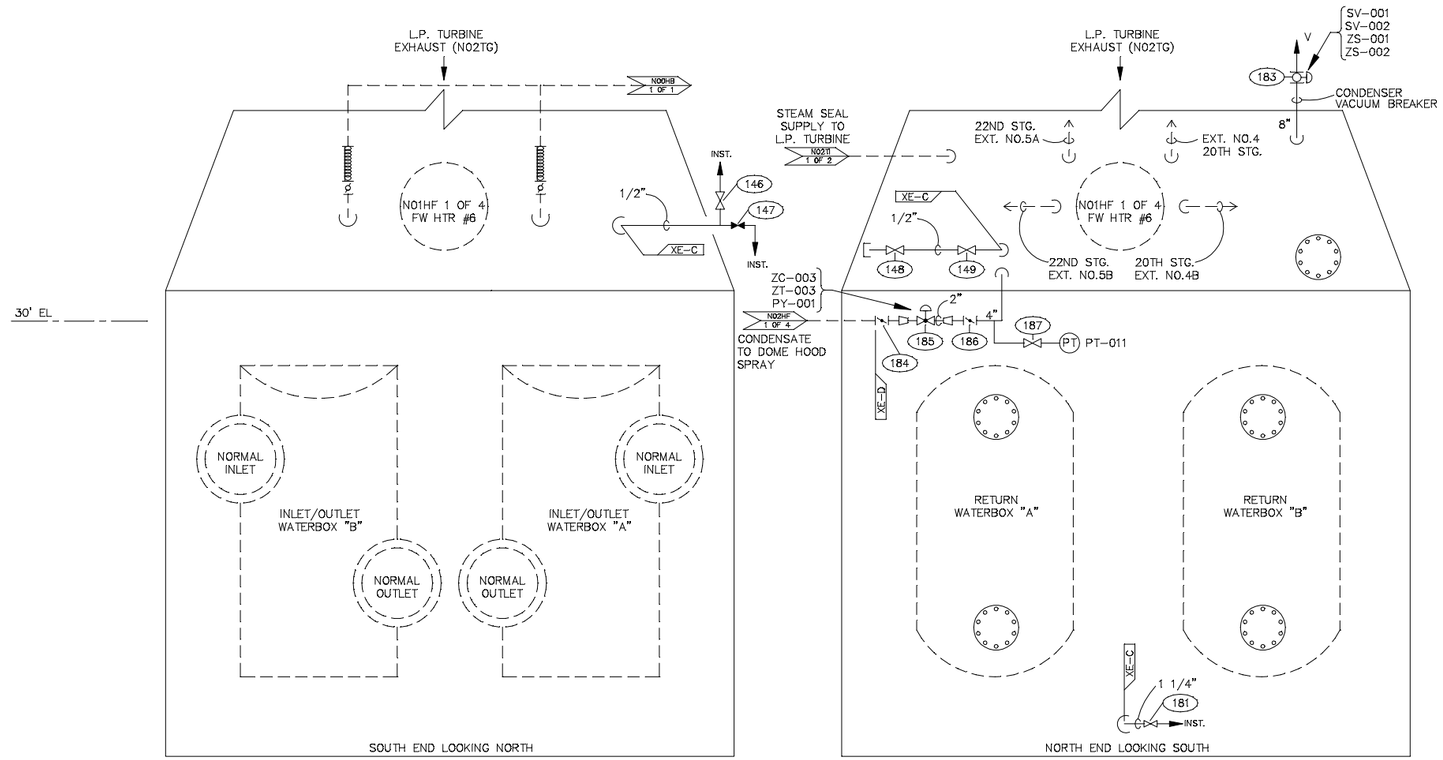


NOTES:

1. SEE PIPELINE LIST FOR PRESSURES AND TEMPERATURES.
2. MISCELLANEOUS PIPING AND INSTRUMENT CONNECTION SIZES ARE AS FOLLOWS, EXCEPT AS INDICATED:
   VENTS & DRAINS = 1"
   PRESSURE CONNECTIONS = 1/2"
   TEMPERATURE CONNECTIONS = 3/4"

| REV. NO. | CAD BY | AUTOCAD DATE | REASON/REVISION BY | APP. BY |
|---|---|---|---|---|
| | | | | |

JEA EQUIPMENT SYSTEM DIAGRAM

UNIT: N02 CRAFT: M DRAWING NO.:
GROUP: X - COOLING WATER
SYSTEM: E - CONDENSER
TITLE:

FILE NAME: M32XE03A.DWG SHT. 3 OF 6

| NO | DATE | REVISIONS AND RECORD OF ISSUE | BY | CHK | APP | FLM |
|---|---|---|---|---|---|---|
| 2 | 08/15/02 | CONFORMED TO CONSTRUCTION RECORDS | TPC | ALC | ALC | |
| 1 | 06/21/01 | GENERAL REVISIONS | DRG | FHT | ALC | |
| 0 | 12/29/00 | RELEASED FOR CONSTRUCTION | WDM | FHT | ALC | |

I HEREBY CERTIFY THAT THIS DOCUMENT WAS PREPARED BY ME OR UNDER MY DIRECT SUPERVISION AND THAT I AM A DULY REGISTERED PROFESSIONAL ENGINEER UNDER THE LAWS OF THE STATE OF FLORIDA.

SIGNED ANTHONY COMPAAN
DATE 12/29/00 REG NO. 45662

BLACK & VEATCH
JEA Building Community

ENGINEER FHT DRAWN FCM
CHECKED WDM DATE 4/10/00

JEA EQUIPMENT NUMBER: N02-XE

JEA DRAWING NUMBER: M32XE03A 3 OF 6

JEA
NORTHSIDE UNITS 1 & 2 REPOWERING PROJECT

PROJECT DRAWING NUMBER: 62713-2XE-M2264C
REV: 2

CONDENSER
PIPING AND INSTRUMENT DIAGRAM

CODE
AREA
M32XE03A

IDL30124 ACAD 15.05
A1ASL005 C1 1=1
07/12/02 14:27:52

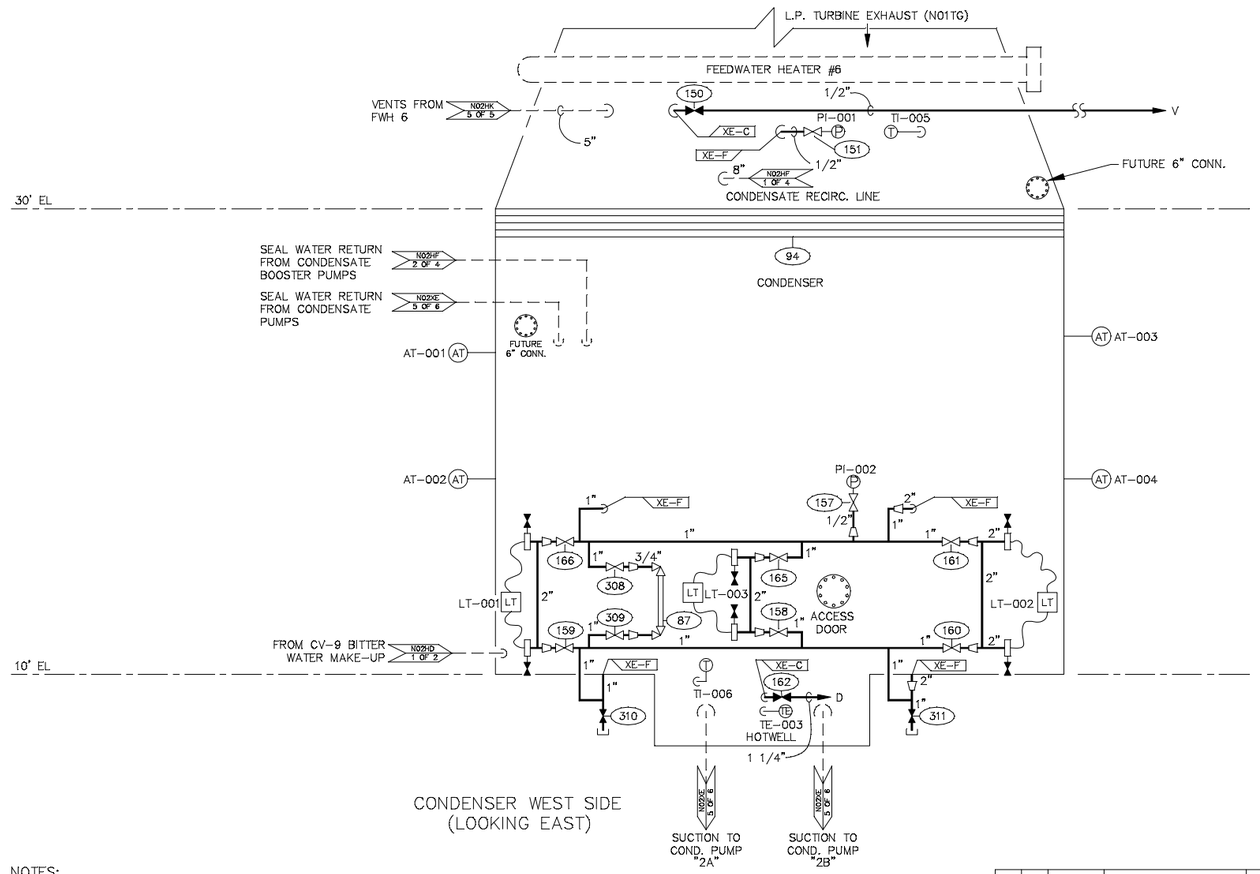


NOTES:

1. SEE PIPELINE LISTS FOR PRESSURES AND TEMPERATURES.
2. MISCELLANEOUS PIPING AND INSTRUMENT CONNECTION SIZES ARE AS FOLLOWS, EXCEPT AS INDICATED:
   VENTS & DRAINS = 1"
   PRESSURE CONNECTIONS = 1/2"
   TEMPERATURE CONNECTIONS = 3/4"

| REV. NO. | CAD BY | AUTOCAD DATE | REASON/REVISION BY | APP. BY |
|---|---|---|---|---|

JEA EQUIPMENT SYSTEM DIAGRAM

UNIT: N02 CRAFT: M DRAWING NO.:
GROUP: X - COOLING WATER
SYSTEM: E - CONDENSER
TITLE:

FILE NAME: M32XE04A.DWG SHT. 4 OF 6

| NO | DATE | REVISIONS AND RECORD OF ISSUE | BY | CHK | APP | FLM |
|---|---|---|---|---|---|---|
| 1 | 08/15/02 | CONFORMED TO CONSTRUCTION RECORDS | TPC | ALC | ALC | |
| 0 | 12/29/00 | RELEASED FOR CONSTRUCTION | WDM | FHT | ALC | |

I HEREBY CERTIFY THAT THIS DOCUMENT WAS PREPARED BY ME OR UNDER MY DIRECT SUPERVISION AND THAT I AM A DULY REGISTERED PROFESSIONAL ENGINEER UNDER THE LAWS OF THE STATE OF FLORIDA.

SIGNED ANTHONY COMPAAN
DATE 12/29/00 REG NO. 45662

BLACK & VEATCH — JEA Building Community

ENGINEER FHT DRAWN FCM
CHECKED WDM DATE 4/10/00

JEA EQUIPMENT NUMBER: N02-XE

JEA DRAWING NUMBER: M32XE04A 4 OF 6

JEA
NORTHSIDE UNITS 1 & 2 REPOWERING PROJECT

CONDENSER
PIPING AND INSTRUMENT DIAGRAM

PROJECT DRAWING NUMBER: 62713-2XE-M2264D REV 1

CODE
AREA
M32XE04A

IDL30124 ACAD 15.05
A1ASL005 C1 1=1
08/20/02 10:32:27

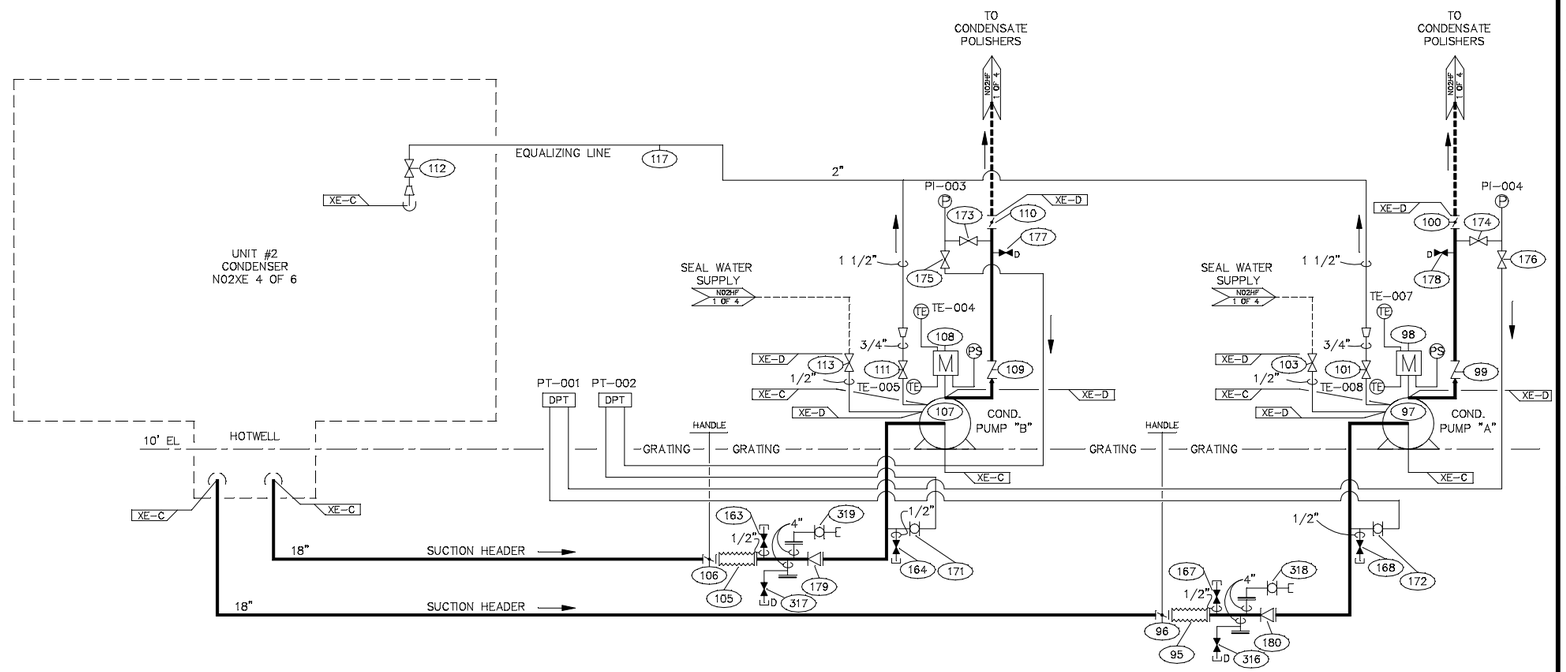


NOTES:

1. SEE PIPELINE LISTS FOR PRESSURES AND TEMPERATURES.
2. MISCELLANEOUS PIPING AND INSTRUMENT CONNECTION SIZES ARE AS FOLLOWS, EXCEPT AS INDICATED:
   VENTS & DRAINS = 1"
   PRESSURE CONNECTIONS = 1/2"
   TEMPERATURE CONNECTIONS = 3/4"

| REV. NO. | CAD BY | AUTOCAD DATE | REASON/REVISION BY | APP. BY |
|---|---|---|---|---|

JEA EQUIPMENT SYSTEM DIAGRAM

UNIT: N02 CRAFT: M DRAWING NO.:
GROUP: X - COOLING WATER
SYSTEM: E - CONDENSER
TITLE:

FILE NAME: M32XE05A.DWG SHT. 5 OF 6

| NO | DATE | REVISIONS AND RECORD OF ISSUE | BY | CHK | APP | FLM |
|---|---|---|---|---|---|---|
| 2 | 08/15/02 | CONFORMED TO CONSTRUCTION RECORDS | TPC | ALC | ALC | |
| 1 | 01/23/01 | GENERAL REVISIONS | WDM | FHT | ALC | |
| 0 | 12/29/00 | RELEASED FOR CONSTRUCTION | WDM | FHT | ALC | |

I HEREBY CERTIFY THAT THIS DOCUMENT WAS PREPARED BY ME OR UNDER MY DIRECT SUPERVISION AND THAT I AM A DULY REGISTERED PROFESSIONAL ENGINEER UNDER THE LAWS OF THE STATE OF FLORIDA.

SIGNED ANTHONY COMPAAN
DATE 12/29/00 REG NO. 45662

BLACK & VEATCH — JEA Building Community

ENGINEER FHT DRAWN FCM
CHECKED WDM DATE 4/10/00

JEA EQUIPMENT NUMBER: N02-XE

JEA DRAWING NUMBER: M32XE05A 5 OF 6

JEA
NORTHSIDE UNITS 1 & 2 REPOWERING PROJECT

PROJECT DRAWING NUMBER: 62713-2XE-M2264E REV 2

CONDENSER
PIPING AND INSTRUMENT DIAGRAM

CODE
AREA
M32XE05A

IDL30124 ACAD 15.05
A1ASL005 C1 1=1
09/03/02 13:30:32

NOTES:

1. SEE PIPELINE LISTS FOR PRESSURES AND TEMPERATURES.
2. MISCELLANEOUS PIPING AND INSTRUMENT CONNECTION SIZES ARE AS FOLLOWS, EXCEPT AS INDICATED:
   VENTS & DRAINS = 1"
   PRESSURE CONNECTIONS = 1/2"
   TEMPERATURE CONNECTIONS = 3/4"

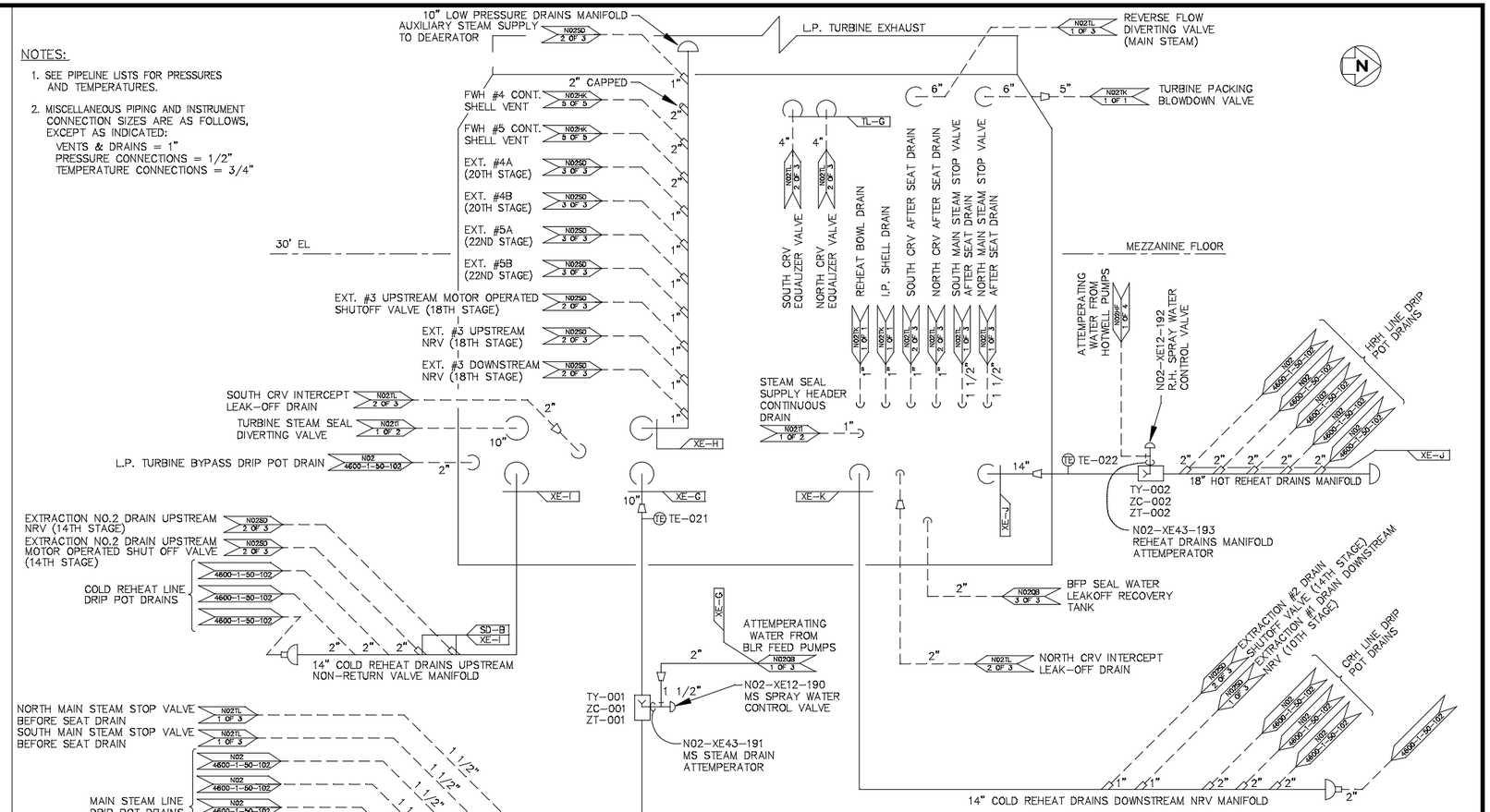


| REV. NO. | CAD BY | AUTOCAD DATE | REASON/REVISION BY | APP. BY |
|---|---|---|---|---|

JEA EQUIPMENT SYSTEM DIAGRAM

UNIT: N02 CRAFT: M DRAWING NO.:
GROUP: X - COOLING WATER
SYSTEM: E - CONDENSER
TITLE:

FILE NAME: M32XE06A.DWG SHT. 6 OF 6

| NO | DATE | REVISIONS AND RECORD OF ISSUE | BY | CHK | APP | FLM |
|---|---|---|---|---|---|---|
| 4 | 08/15/02 | CONFORMED TO CONSTRUCTION RECORDS | TPC | ALC | ALC | |
| 3 | 08/10/01 | GENERAL REVISIONS | DRG | FHT | ALC | |
| 2 | 06/26/01 | GENERAL REVISIONS | DRG | FHT | ALC | |
| 1 | 05/02/01 | GENERAL REVISIONS | WDM | FHT | ALC | |
| 0 | 12/29/00 | RELEASED FOR CONSTRUCTION | WDM | FHT | ALC | |

I HEREBY CERTIFY THAT THIS DOCUMENT WAS PREPARED BY ME OR UNDER MY DIRECT SUPERVISION AND THAT I AM A DULY REGISTERED PROFESSIONAL ENGINEER UNDER THE LAWS OF THE STATE OF FLORIDA.

SIGNED ANTHONY COMPAAN
DATE 12/29/00 REG NO. 45662

BLACK & VEATCH — JEA Building Community

ENGINEER FHT DRAWN FCM
CHECKED DRG DATE 3/1/00

JEA EQUIPMENT NUMBER: N02-XE

JEA DRAWING NUMBER: M32XE06A 6 OF 6

JEA
NORTHSIDE UNITS 1 & 2 REPOWERING PROJECT

CONDENSER
PIPING AND INSTRUMENT DIAGRAM

PROJECT DRAWING NUMBER: 62713-2XE-M2264F REV 4

CODE
AREA
M32XE06A

ACAD 15.05
C1 1=1
07:26:21
IDL30124
A1ASL005
07/11/02

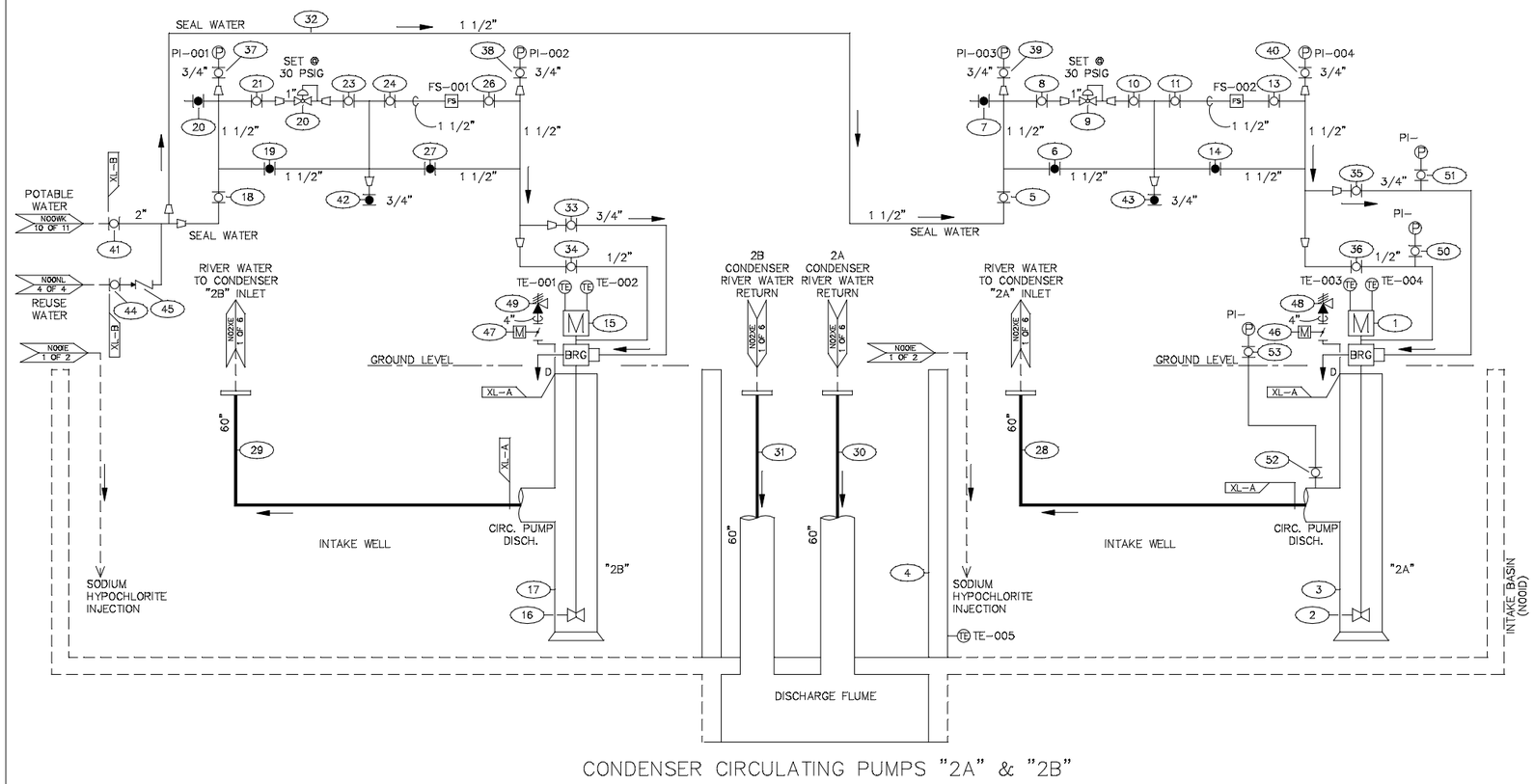


CONDENSER CIRCULATING PUMPS "2A" & "2B"

NOTES:

1. SEE PIPELINE LISTS FOR PRESSURES AND TEMPERATURES.
2. MISCELLANEOUS PIPING AND INSTRUMENT CONNECTION SIZES ARE AS FOLLOWS, EXCEPT AS INDICATED:
   VENTS & DRAINS = 1"
   PRESSURE CONNECTIONS = 1/2"
   TEMPERATURE CONNECTIONS = 3/4"

| REV. NO. | CAD BY | AUTOCAD DATE | REASON/REVISION BY | APP. BY |
|---|---|---|---|---|
| 0 | FCM | 6/19/00 | ISSUED FOR CONSTRUCTION | FHT |

JEA EQUIPMENT SYSTEM DIAGRAM

UNIT: N02 CRAFT: M DRAWING NO.:
GROUP: X - COOLING WATER
SYSTEM: L - CIRCULATING WATER
TITLE: CONDENSER CIRCULATING PUMPS "2A" & "2B"

FILE NAME: M32XL01A.DWG SHT. 1 OF 1

| NO | DATE | REVISIONS AND RECORD OF ISSUE | BY | CHK | APP | FLM |
|---|---|---|---|---|---|---|
| 3 | 08/15/02 | CONFORMED TO CONSTRUCTION RECORDS | TPC | ALC | ALC | |
| 2 | 02/16/01 | GENERAL REVISIONS | WDM | DRG | ALC | |
| 1 | 01/02/01 | GENERAL REVISIONS | WDM | DRG | ALC | |
| 0 | 6/19/00 | ISSUED FOR CONSTRUCTION | FCM | DRG | ALC | |

I HEREBY CERTIFY THAT THIS DOCUMENT WAS PREPARED BY ME OR UNDER MY DIRECT SUPERVISION AND THAT I AM A DULY REGISTERED PROFESSIONAL ENGINEER UNDER THE LAWS OF THE STATE OF FLORIDA.

SIGNED ANTHONY COMPAAN
DATE 06/21/00 REG NO. 45662

BLACK & VEATCH — JEA Building Community

ENGINEER WDM DRAWN FCM
CHECKED DRG DATE 6/14/00

JEA EQUIPMENT NUMBER: N02-XL

JEA DRAWING NUMBER: M32XL01A 1 OF 1

JEA
NORTHSIDE UNITS 1 & 2 REPOWERING PROJECT

PROJECT DRAWING NUMBER: 62713-2XL-M2263 REV 3

COOLING WATER-CIRCULATING WATER PIPING AND INSTRUMENT DIAGRAM

CODE
AREA
M32XL01A

IDL30124 ACAD 15.05
A1ASL005 C1 1=1
08/05/02 13:23:42

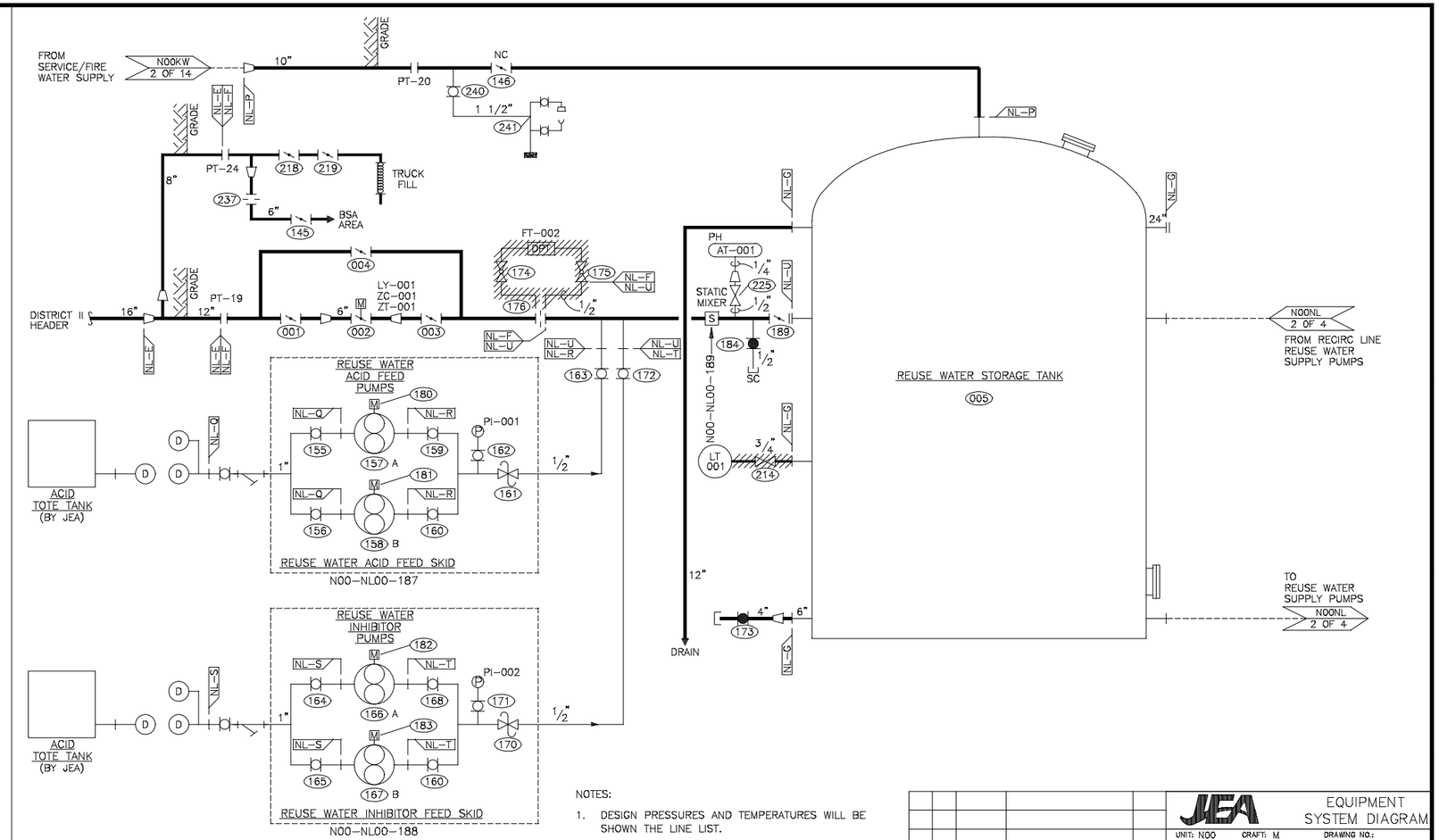


NOTES:

1. DESIGN PRESSURES AND TEMPERATURES WILL BE SHOWN THE LINE LIST.
2. MISCELLANEOUS PIPING AND INSTRUMENT CONNECTION SIZES ARE AS FOLLOWS, EXCEPT AS INDICATED:

| | |
|---|---|
| VENTS & DRAINS | 1 INCH |
| PRESSURE CONNECTIONS | 1/2 INCH |
| TEMPERATURE CONNECTIONS | 3/4 INCH |

| REV. NO. | CAD BY | AUTOCAD DATE | REASON/REVISION BY | APP. BY |
|---|---|---|---|---|
| | | | | |

JEA EQUIPMENT SYSTEM DIAGRAM

UNIT: N00 CRAFT: M DRAWING NO.:
GROUP: N - WASTE
SYSTEM: L - SEWAGE TREATMENT
TITLE:

FILE NAME: M30NL01A.DWG SHT. 1 OF 4

| NO | DATE | REVISIONS AND RECORD OF ISSUE | BY | CHK | APP | FLM |
|---|---|---|---|---|---|---|
| 4 | 08/15/02 | CONFORMED TO CONSTRUCTION RECORDS | TPC | ALC | ALC | |
| 3 | 08/06/01 | GENERAL REVISIONS | TPC | DRG | ALC | |
| 2 | 01/23/01 | GENERAL REVISIONS | TPC | WDM | ALC | |
| 1 | 12/15/00 | GENERAL REVISIONS | TPC | WDM | ALC | |
| 0 | 7/14/00 | ISSUED FOR CONSTRUCTION | TSA | WDM | ALC | |

I HEREBY CERTIFY THAT THIS DOCUMENT WAS PREPARED BY ME OR UNDER MY DIRECT SUPERVISION AND THAT I AM A DULY REGISTERED PROFESSIONAL ENGINEER UNDER THE LAWS OF THE STATE OF FLORIDA.

SIGNED ANTHONY COMPAAN
DATE 7/17/00 REG NO. 45662

BLACK & VEATCH — JEA Building Community

ENGINEER KLC DRAWN SLM
CHECKED TSA DATE 4/12/00

JEA EQUIPMENT NUMBER: N00-NL

JEA DRAWING NUMBER: M30NL01A 1 OF 4

JEA
NORTHSIDE UNITS 1 & 2 REPOWERING PROJECT

PROJECT DRAWING NUMBER: 62713-CNL-M2642A REV: 4

REUSE WATER SYSTEM
PIPING AND INSTRUMENT DIAGRAM

CODE
AREA
M30NL01A

IDL30124 ACAD 15.05
A1ASL005 C1 1=1
08/05/02 13:19:57

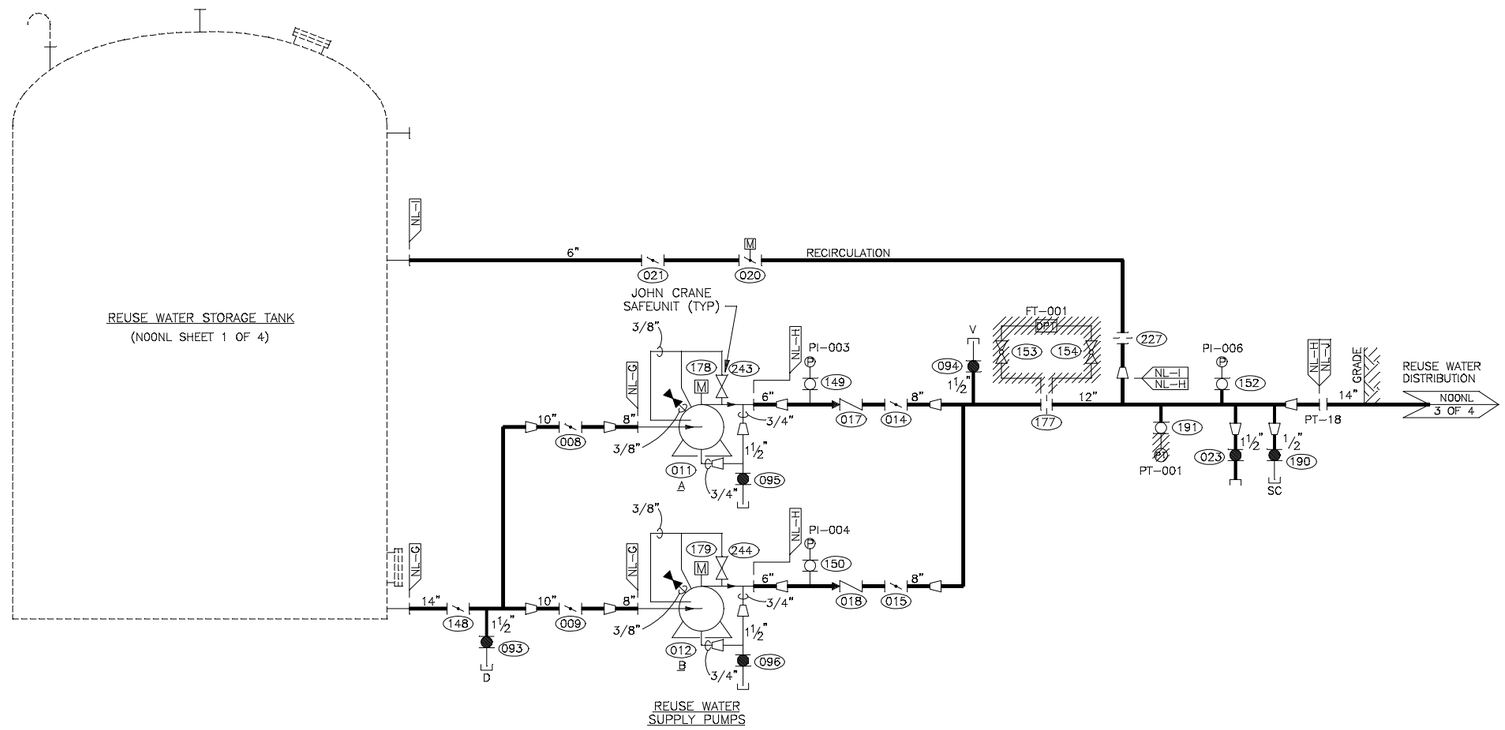


NOTES:

1. DESIGN PRESSURES AND TEMPERATURES WILL BE SHOWN THE LINE LIST.
2. MISCELLANEOUS PIPING AND INSTRUMENT CONNECTION SIZES ARE AS FOLLOWS, EXCEPT AS INDICATED:

| | |
|---|---|
| VENTS & DRAINS | 1 INCH |
| PRESSURE CONNECTIONS | 1/2 INCH |
| TEMPERATURE CONNECTIONS | 3/4 INCH |

| REV. NO. | CAD BY | AUTOCAD DATE | REASON/REVISION BY | APP. BY |
|---|---|---|---|---|

JEA EQUIPMENT SYSTEM DIAGRAM

UNIT: N00 CRAFT: M DRAWING NO.:
GROUP: N - WASTE
SYSTEM: L - SEWAGE TREATMENT
TITLE:

FILE NAME: M30NL02A.DWG SHT. 2 OF 4

| NO | DATE | REVISIONS AND RECORD OF ISSUE | BY | CHK | APP | FLM |
|---|---|---|---|---|---|---|
| 3 | 08/15/02 | CONFORMED TO CONSTRUCTION RECORDS | TPC | ALC | ALC | |
| 2 | 11/08/01 | GENERAL REVISIONS | TPC | DRG | ALC | |
| 1 | 12/15/00 | GENERAL REVISIONS | TPC | WDM | ALC | |
| 0 | 7/14/00 | ISSUED FOR CONSTRUCTION | TSA | WDM | ALC | |

I HEREBY CERTIFY THAT THIS DOCUMENT WAS PREPARED BY ME OR UNDER MY DIRECT SUPERVISION AND THAT I AM A DULY REGISTERED PROFESSIONAL ENGINEER UNDER THE LAWS OF THE STATE OF FLORIDA.

SIGNED ANTHONY COMPAAN
DATE 7/17/00 REG NO. 45662

BLACK & VEATCH Building Community

ENGINEER KLC DRAWN SLM
CHECKED TSA DATE 4/12/00

JEA EQUIPMENT NUMBER: N00-NL

JEA DRAWING NUMBER: M30NL02A 2 OF 4

JEA
NORTHSIDE UNITS 1 & 2 REPOWERING PROJECT

PROJECT DRAWING NUMBER: 62713-CNL-M2642B REV 3

REUSE WATER SYSTEM
PIPING AND INSTRUMENT DIAGRAM

CODE
AREA
M30NL02A

IDL30124 ACAD 15.05
A1ASL005 C1 1=1
08/16/02 11:09:55

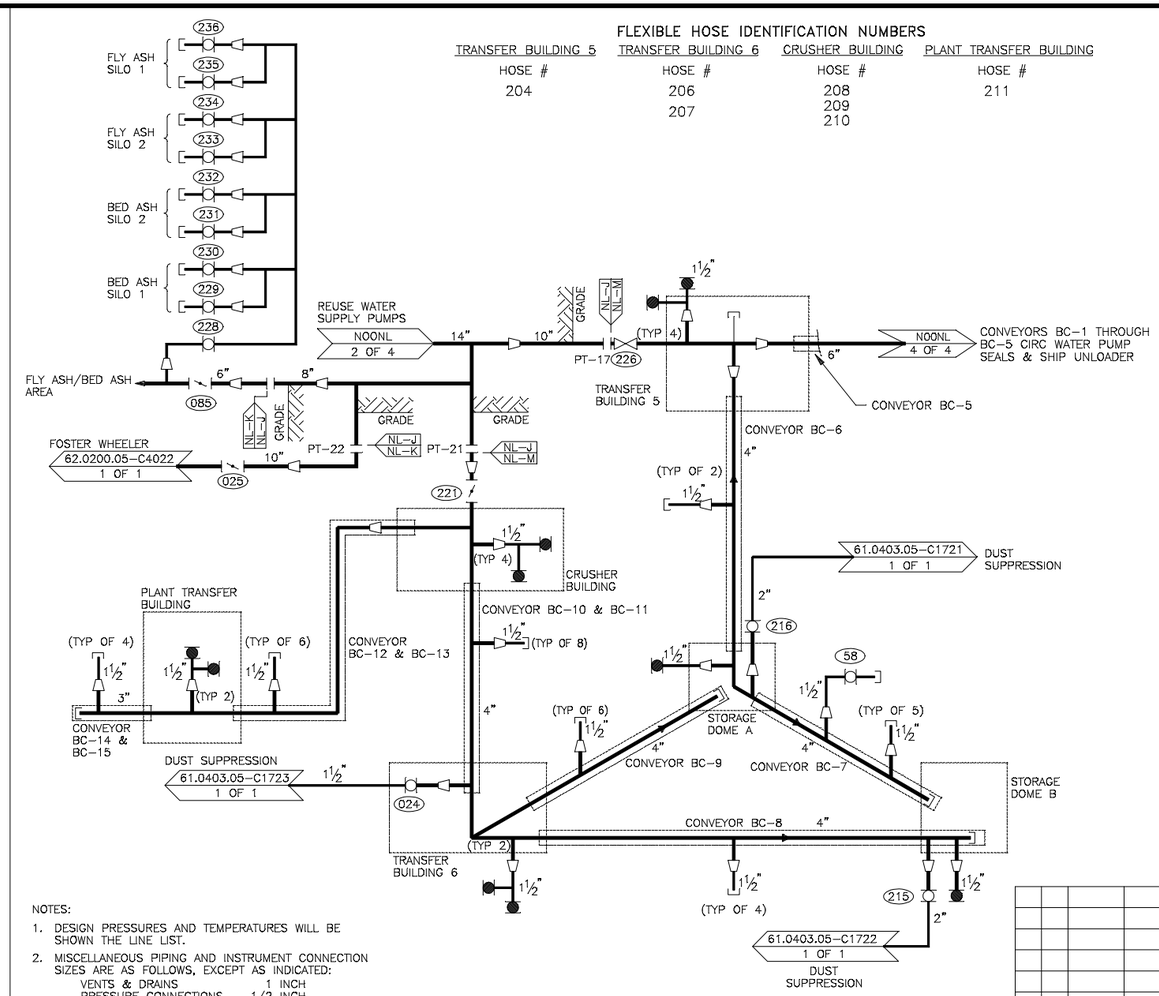


## FLEXIBLE HOSE IDENTIFICATION NUMBERS

| TRANSFER BUILDING 5 | TRANSFER BUILDING 6 | CRUSHER BUILDING | PLANT TRANSFER BUILDING |
|---|---|---|---|
| HOSE # | HOSE # | HOSE # | HOSE # |
| 204 | 206 | 208 | 211 |
| | 207 | 209 | |
| | | 210 | |

## HOSE CONNECTION VALVE IDENTIFICATION NUMBERS

TRANSFER BUILDING 5

| VALVE # | ELEVATION |
|---|---|
| 044 | 127'-0" |
| 046 | 127'-0" |
| 048 | 105'-0" |
| 049 | 105'-0" |
| 050 | 67'-0" |
| 051 | 67'-0" |
| 052 | 23'-0" |
| 053 | 23'-0" |

TRANSFER BUILDING 6

| VALVE # | ELEVATION |
|---|---|
| 054 | 19'-6" |
| 055 | 19'-6" |
| 056 | 38'-0" |
| 057 | 38'-0" |

CRUSHER BUILDING

| VALVE # | ELEVATION |
|---|---|
| 059 | 20'-0" |
| 060 | 20'-0" |
| 062 | 46'-0" |
| 064 | 46'-0" |
| 065 | 66'-0" |
| 069 | 66'-0" |
| 071 | 110'-0" |
| 073 | 110'-0" |

PLANT TRANSFER BUILDING

| VALVE # | ELEVATION |
|---|---|
| 074 | 164'-6" |
| 086 | 164'-6" |

STORAGE DOME "A"

| VALVE # | ELEVATION |
|---|---|
| 087 | 137'-0" |

STORAGE DOME "B"

| VALVE # | ELEVATION |
|---|---|
| 088 | 19'-6" |

NOTES:

1. DESIGN PRESSURES AND TEMPERATURES WILL BE SHOWN THE LINE LIST.
2. MISCELLANEOUS PIPING AND INSTRUMENT CONNECTION SIZES ARE AS FOLLOWS, EXCEPT AS INDICATED:
   - VENTS & DRAINS 1 INCH
   - PRESSURE CONNECTIONS 1/2 INCH
   - TEMPERATURE CONNECTIONS 3/4 INCH

| REV. NO. | CAD BY | AUTOCAD DATE | REASON/REVISION BY | APP. BY |
|---|---|---|---|---|
| | | | | |

JEA EQUIPMENT SYSTEM DIAGRAM

UNIT: N00 CRAFT: M DRAWING NO.:
GROUP: N - WASTE
SYSTEM: L - SEWAGE TREATMENT
TITLE:

FILE NAME: M30NL03A.DWG SHT. 3 OF 4

| NO | DATE | REVISIONS AND RECORD OF ISSUE | BY | CHK | APP | FLM |
|---|---|---|---|---|---|---|
| 6 | 08/15/02 | CONFORMED TO CONSTRUCTION RECORDS | TPC | ALC | ALC | |
| 5 | 08/06/01 | GENERAL REVISIONS | TPC | DRG | ALC | |
| 4 | 01/23/01 | GENERAL REVISIONS | TPC | WDM | ALC | |
| 3 | 12/21/00 | GENERAL REVISIONS | TPC | WDM | ALC | |
| 2 | 12/15/00 | GENERAL REVISIONS | TPC | WDM | ALC | |
| 1 | 8/16/00 | REMOVE HOLDS/REVISED CON & SCOPE | TSA | KRW | KRW | |
| 0 | 7/14/00 | ISSUED FOR CONSTRUCTION | TSA | WDM | ALC | |

I HEREBY CERTIFY THAT THIS DOCUMENT WAS PREPARED BY ME OR UNDER MY DIRECT SUPERVISION AND THAT I AM A DULY REGISTERED PROFESSIONAL ENGINEER UNDER THE LAWS OF THE STATE OF FLORIDA.

SIGNED ANTHONY COMPAAN
DATE 07-17-00 REG NO. 45662

BLACK & VEATCH — JEA Building Community

ENGINEER TSA DRAWN SLM
CHECKED TSA DATE 4/12/00

JEA EQUIPMENT NUMBER: N00-NL

JEA DRAWING NUMBER: M30NL03A 3 OF 4

JEA
NORTHSIDE UNITS 1 & 2 REPOWERING PROJECT

REUSE WATER SYSTEM
PIPING AND INSTRUMENT DIAGRAM

PROJECT DRAWING NUMBER: 62713-CNL-M2642C REV 6

CODE
AREA
M30NL03A

ACAD 15.05
C1 1=1
IDL30124 09:17:58
A14SL005 08/27/02

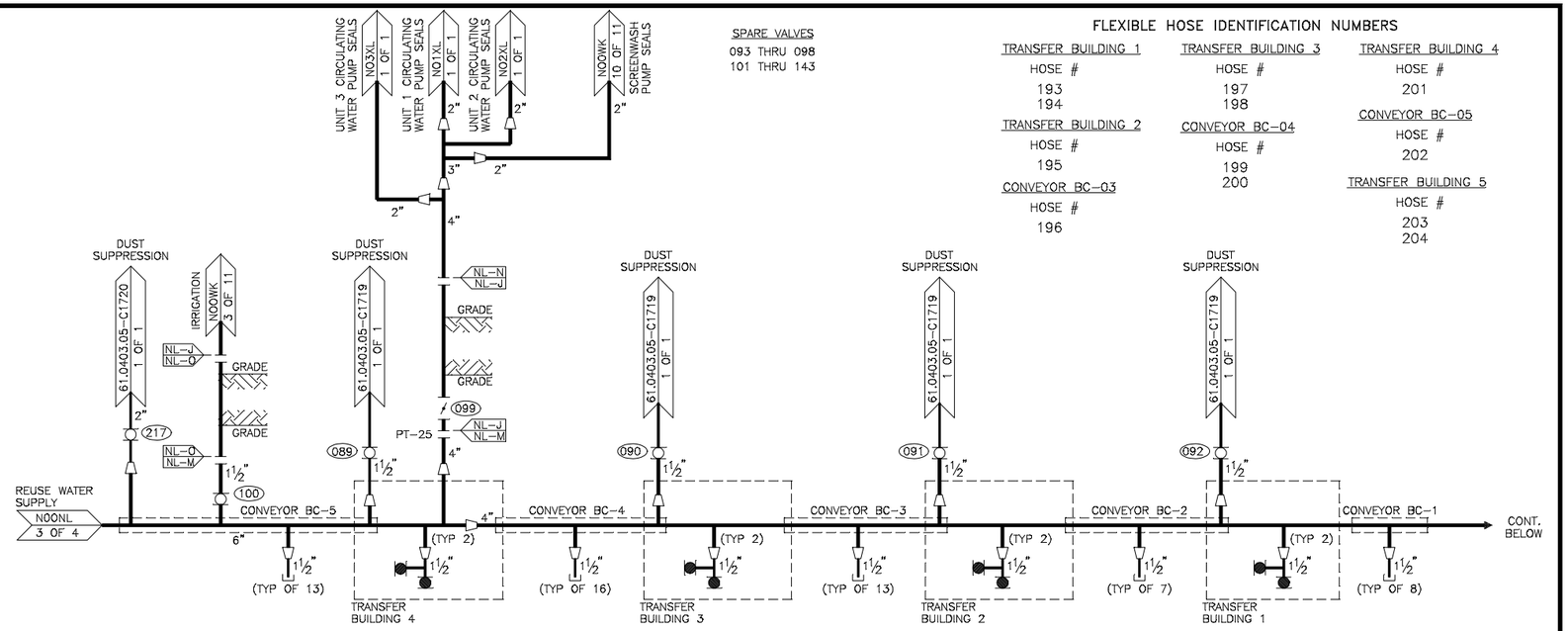


SPARE VALVES
093 THRU 098
101 THRU 143

## FLEXIBLE HOSE IDENTIFICATION NUMBERS

| TRANSFER BUILDING 1 | TRANSFER BUILDING 3 | TRANSFER BUILDING 4 |
|---|---|---|
| HOSE # | HOSE # | HOSE # |
| 193 | 197 | 201 |
| 194 | 198 | |
| **TRANSFER BUILDING 2** | **CONVEYOR BC-04** | **CONVEYOR BC-05** |
| HOSE # | HOSE # | HOSE # |
| 195 | 199 | 202 |
| **CONVEYOR BC-03** | 200 | **TRANSFER BUILDING 5** |
| HOSE # | | HOSE # |
| 196 | | 203 |
| | | 204 |

## HOSE CONNECTION VALVE IDENTIFICATION NUMBERS

| TRANSFER BUILDING 1 | | TRANSFER BUILDING 2 | | TRANSFER BUILDING 3 | | TRANSFER BUILDING 4 | |
|---|---|---|---|---|---|---|---|
| VALVE # | ELEVATION | VALVE # | ELEVATION | VALVE # | ELEVATION | VALVE # | ELEVATION |
| 026 | 28'-0" | 030 | 37'-6" | 035 | 49'-0" | 040 | 52'-0" |
| 027 | 28'-0" | 031 | 37'-6" | 036 | 49'-0" | 041 | 52'-0" |
| 028 | 14'-0" | 032 | 12'-0" | 038 | 34'-0" | 042 | 37'-0" |
| 029 | 14'-0" | 034 | 12'-0" | 039 | 34'-0" | 043 | 37'-0" |

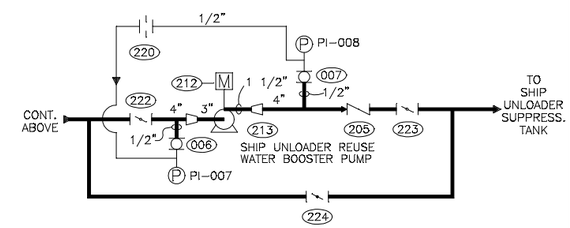


NOTES:

1. DESIGN PRESSURES AND TEMPERATURES WILL BE SHOWN THE LINE LIST.
2. MISCELLANEOUS PIPING AND INSTRUMENT CONNECTION SIZES ARE AS FOLLOWS, EXCEPT AS INDICATED:
   - VENTS & DRAINS 1 INCH
   - PRESSURE CONNECTIONS 1/2 INCH
   - TEMPERATURE CONNECTIONS 3/4 INCH

| REV. NO. | CAD BY | AUTOCAD DATE | REASON/REVISION BY | APP. BY |
|---|---|---|---|---|
| | | | | |

JEA EQUIPMENT SYSTEM DIAGRAM

UNIT: N00 CRAFT: M DRAWING NO.:
GROUP: N - WASTE
SYSTEM: L - SEWAGE TREATMENT
TITLE:

FILE NAME: M30NL04A.DWG SHT. 4 OF 4

| NO | DATE | REVISIONS AND RECORD OF ISSUE | BY | CHK | APP | FLM |
|---|---|---|---|---|---|---|
| 7 | 08/15/02 | CONFORMED TO CONSTRUCTION RECORDS | TPC | ALC | ALC | |
| 6 | 08/15/01 | GENERAL REVISIONS | FHT | DRG | ALC | |
| 5 | 07/30/01 | GENERAL REVISIONS | TPC | DRG | ALC | |
| 4 | 01/23/01 | GENERAL REVISIONS | TPC | WDM | ALC | |
| 3 | 12/21/00 | GENERAL REVISIONS | TPC | WDM | ALC | |
| 2 | 12/15/00 | GENERAL REVISIONS | TPC | WDM | ALC | |
| 1 | 8/16/00 | REMOVE HOLDS/REVISE SCOPE | TSA | KRW | KRW | |
| 0 | 7/14/00 | ISSUED FOR CONSTRUCTION | TSA | WDM | ALC | |

I HEREBY CERTIFY THAT THIS DOCUMENT WAS PREPARED BY ME OR UNDER MY DIRECT SUPERVISION AND THAT I AM A DULY REGISTERED PROFESSIONAL ENGINEER UNDER THE LAWS OF THE STATE OF FLORIDA.

SIGNED ANTHONY COMPAAN
DATE 07-17-00 REG NO. 45662

BLACK & VEATCH
JEA Building Community

ENGINEER TSA DRAWN SLM
CHECKED TSA DATE 4/12/00

JEA EQUIPMENT NUMBER: N00-NL

JEA DRAWING NUMBER: M30NL04A 4 OF 4

JEA
NORTHSIDE UNITS 1 & 2 REPOWERING PROJECT

PROJECT DRAWING NUMBER: 62713-CNL-M2642D REV 7

REUSE WATER SYSTEM
PIPING AND INSTRUMENT DIAGRAM

CODE
AREA
M30NL04A

ACAD 15.05
C1 1=1
11:24:36
IDL30124
AIASL005
07/24/02