NATIONAL ENERGY TECHNOLOGY LABORATORY

2011 NETL CO_2 Capture Technology Meeting

Aug. 22 – Aug. 26, 2011
Pittsburgh, PA

The U.S. Department of Energy's Carbon Dioxide Capture RD&D Program

Jared Ciferno, Technology Manager
Existing Plants Program

DOE/NETL CO_2 Capture RD&D

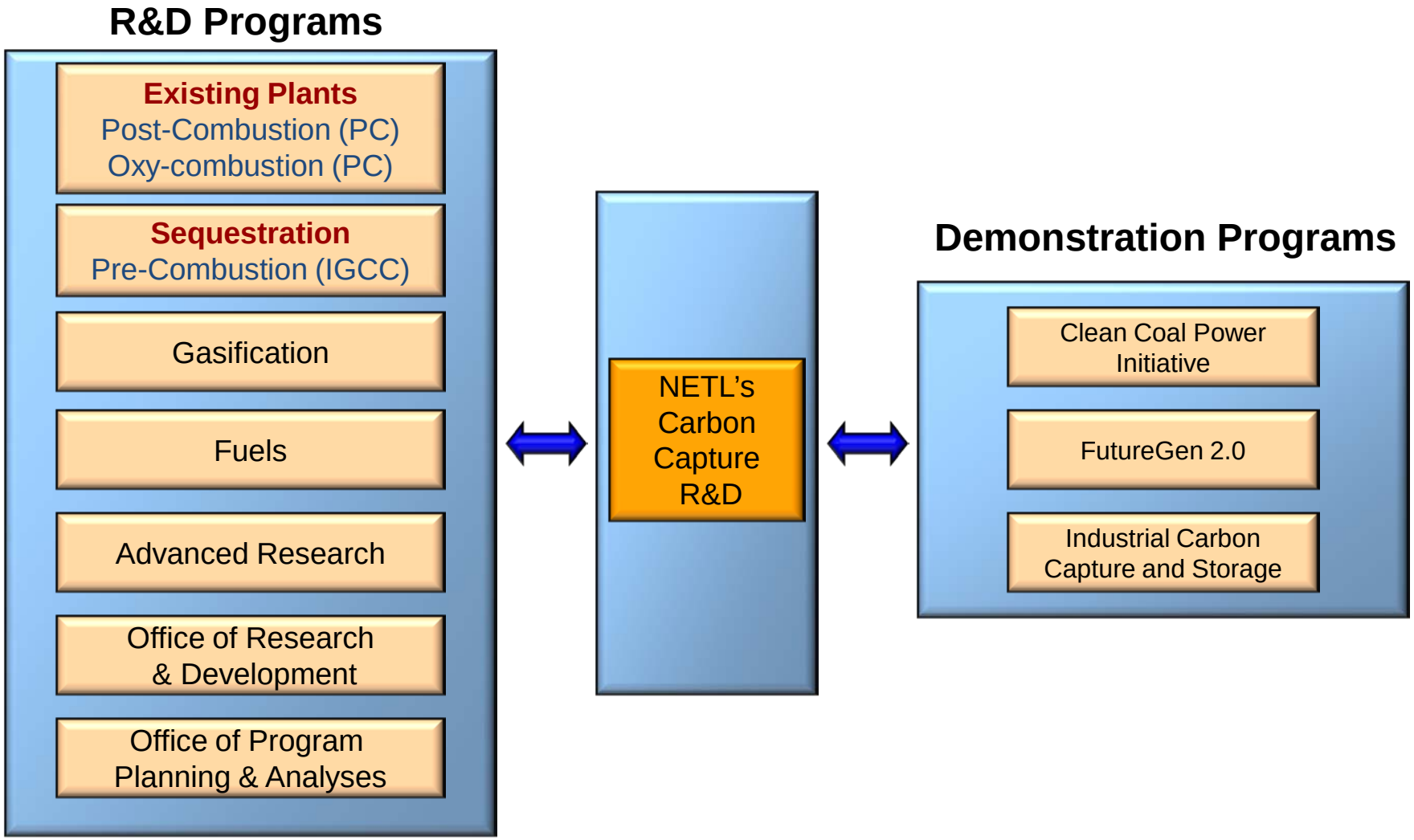

Conference Overview

Monday	Post-Combustion Sorbents
	Post-Combustion Membranes
Tuesday	Post-Combustion Solvents
	ARPA-E Capture Projects
Wednesday	Oxy-combustion and Oxygen Production
	Chemical Looping
	CO_2 Compression
Thursday	FutureGen 2.0, CCPI & ICCS Demonstrations
	System Studies and Modeling
	Pre-Combustion Projects
Friday	Pre-Combustion Projects, cont'd

Pulverized Coal Power Plant System

Post-combustion CO_2 Scrubbing

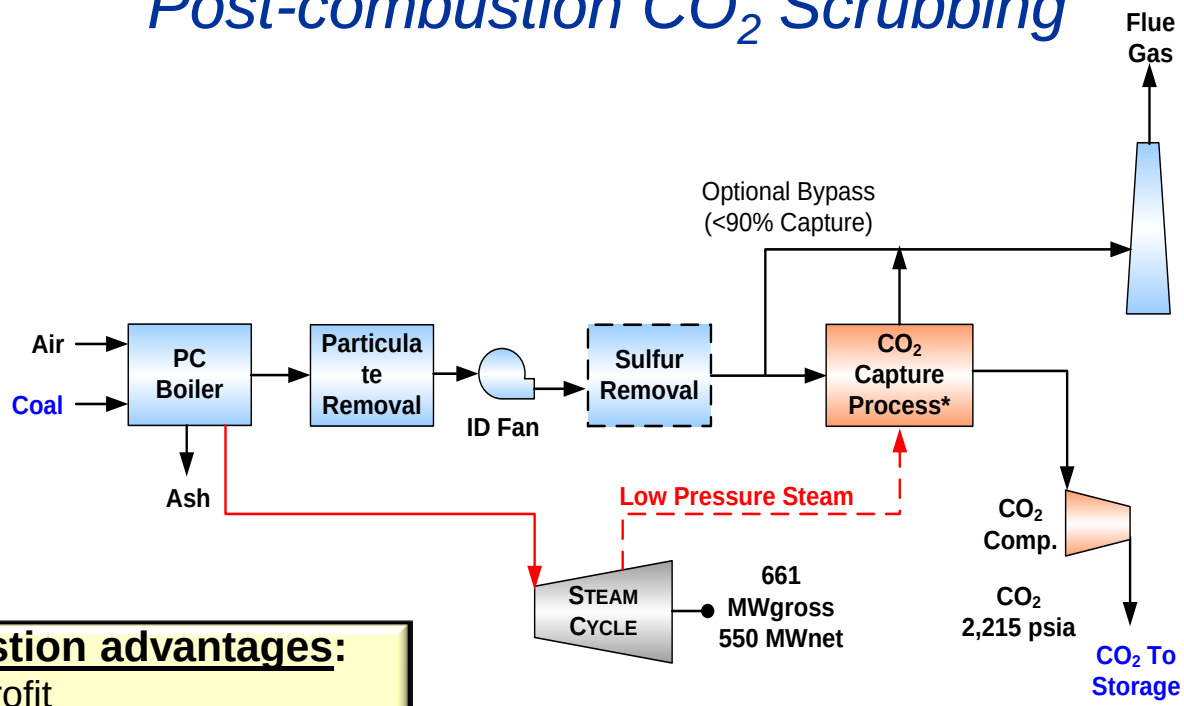

Post-combustion advantages:

- Back-end retrofit
- Slip-stream (0 to 90% capture)

Amine scrubbing Advantages:

- Proven Technology (Petroleum refining, NG purification)
- Chemical solvent → High loadings at low CO_2 partial pressure
- Relatively cheap chemical ($2-3/lb)

Key Challenges:

- Dilute flue gas (12-15 volume %)
- 2-3 MM acfm for a 500-600 Mwe plant
- ~50% currently scrubbed for SOx/NOx
- Increased cooling requirements

Two-step separation process requiring 5 energy inputs:

Energy = Q (sensible) + Q (reaction) + Q (stripping) + W (Process) + W (Comp.)

ALL must be reduced in order to significantly reduce Capture COE impact!

IGCC Power Plant System

Pre-combustion CO_2 Scrubbing

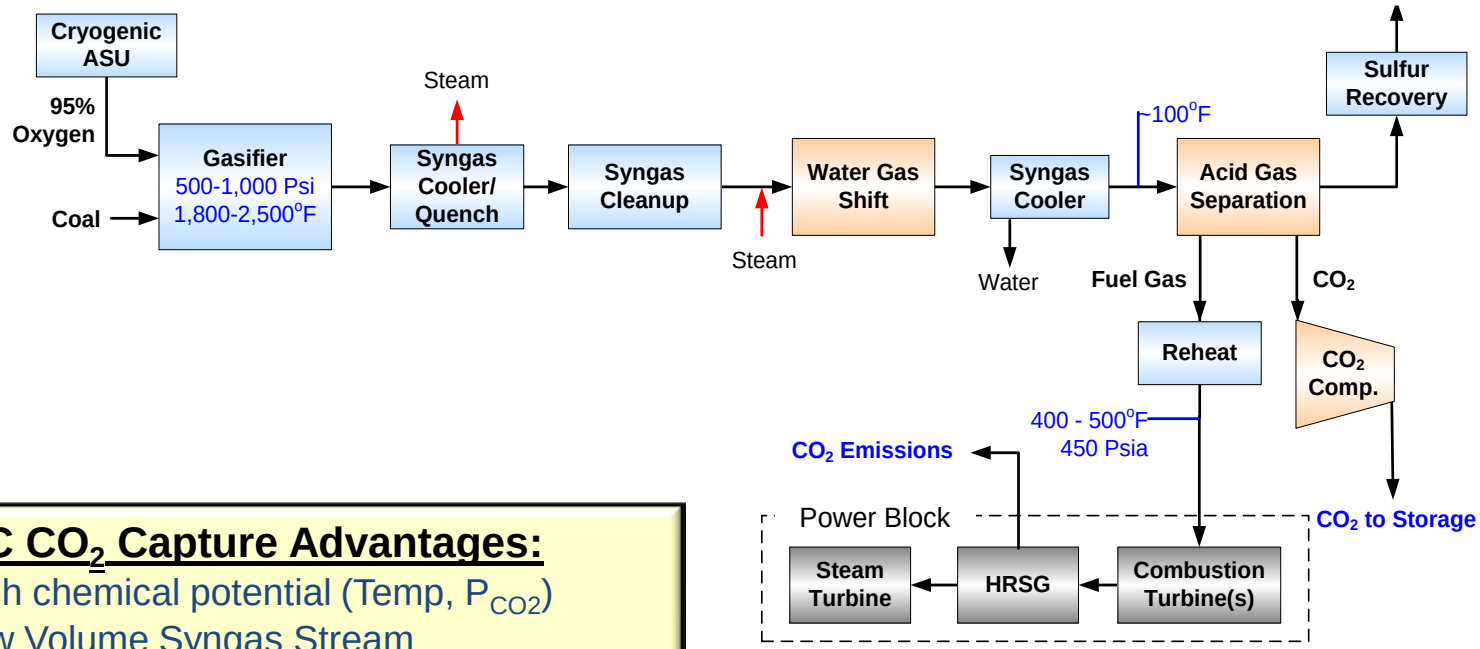

IGCC CO_2 Capture Advantages:

- High chemical potential (Temp, P_{CO2})
- Low Volume Syngas Stream

Selexol™ CO_2 Capture Advantages:

- 30+ years of commercial operation (55 worldwide plants)
- Physical Liquid Sorbent
- Highly selective for H_2S and CO_2
- CO_2 is produced at "some" pressure

Key Challenges:

- Complex, integrated power process
- Additional process (WGS) to get high capture rates
- Current technology (Selexol) requires cooling and reheating

Pulverized Coal Oxyfuel Combustion

Technology Opportunities

$$\text{Coal} + O_2 \rightarrow CO_2 + H_2O$$

Cheap Oxygen
Oxygen Membranes

Advanced MOC*
Reduce CO_2 Recycle
Handle High Sulfur Con.

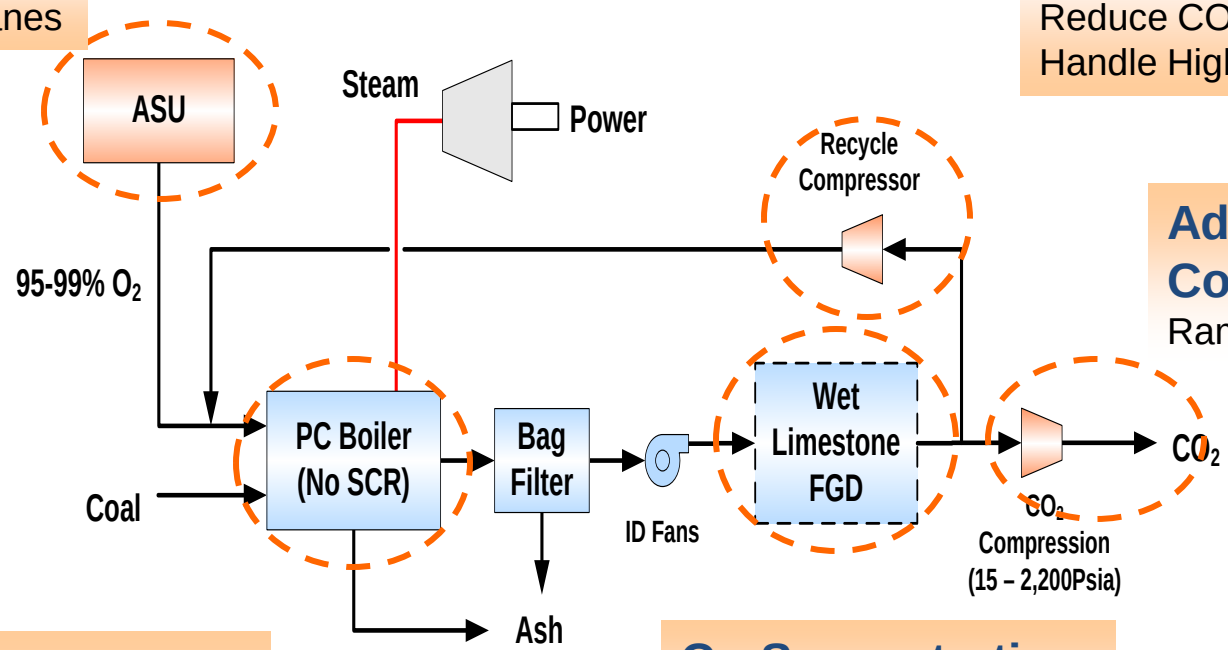

Advanced Compression
Ramgen, SwRI

Oxyfuel Boilers
Compact Boiler Designs
Adv. Materials (USC)
Advanced Burners

Co-Sequestration
Multi-pollutant capture

*Materials of Construction

Deployment Barriers for CO_2 Capture On New and Existing Coal Plants Today

1. **Scale-up**
   - Current Post Combustion capture ~200 TPD
   - 550 MWe power plant produces 13,000 TPD
2. **Energy Penalty**
   - 20% to 30% less power output
3. **Cost**
   - Increase Cost of Electricity by 80%
   - Adds Capital Cost by $1,500 - $2,000/KW
4. **Regulatory framework**
   - Transport — pipeline network
   - Storage
5. **Economies of Scale**
   - Land, power, water use, transportation, process components, …

Scale-Up Is An Issue

Laboratory Scale

- **0.1 ft^3 Reactor Volume**
- **0.27 scf per minute**

Technically Possible?

Scale-up

Economically Feasible?

550 Mwe Scale

- **57,000 ft^3 Reactor Volume**
- **2,000,000 scf per minute**

Stages of Energy RD&D

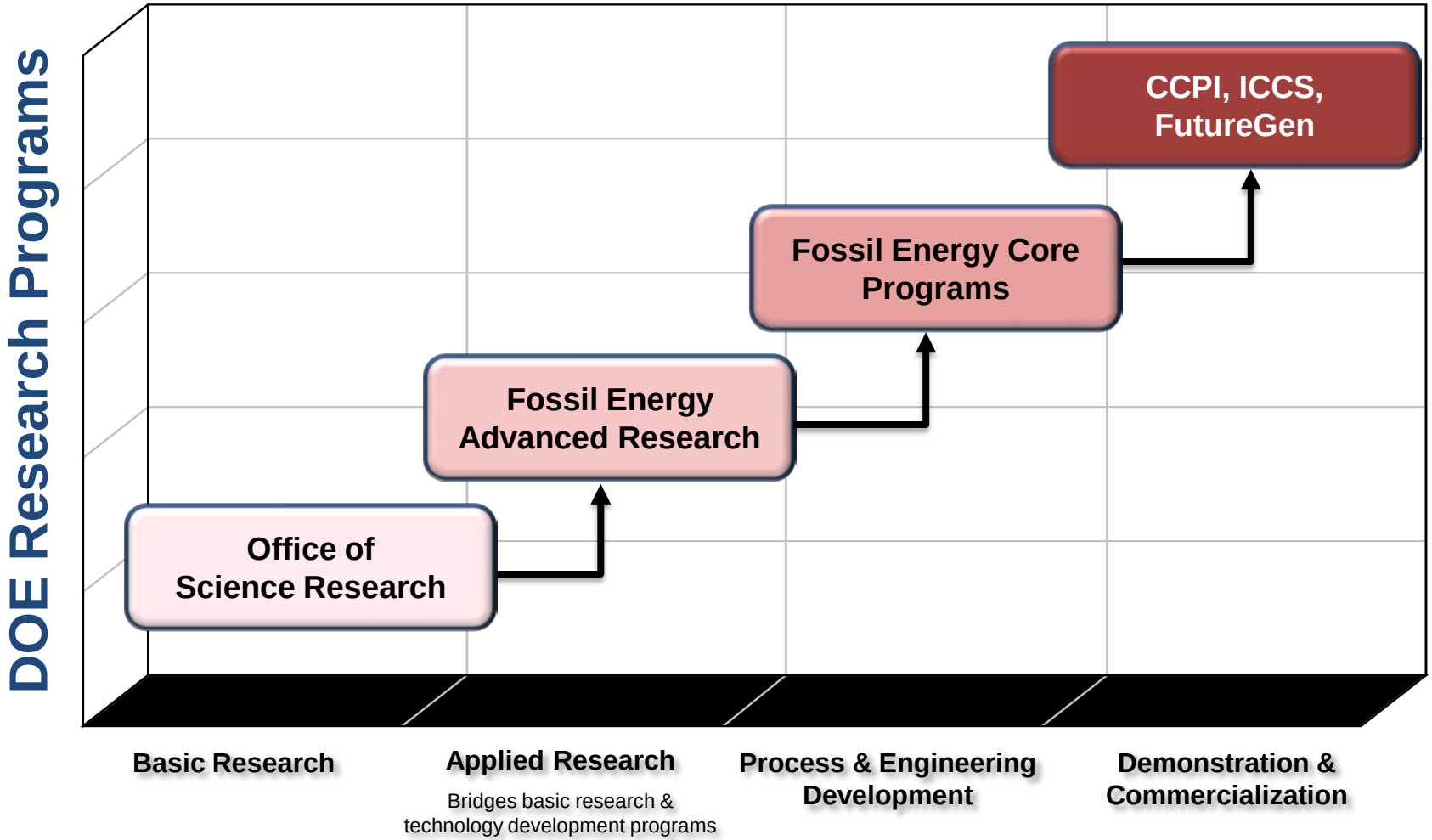

DOE/NETL CO_2 Capture RD&D Timeline

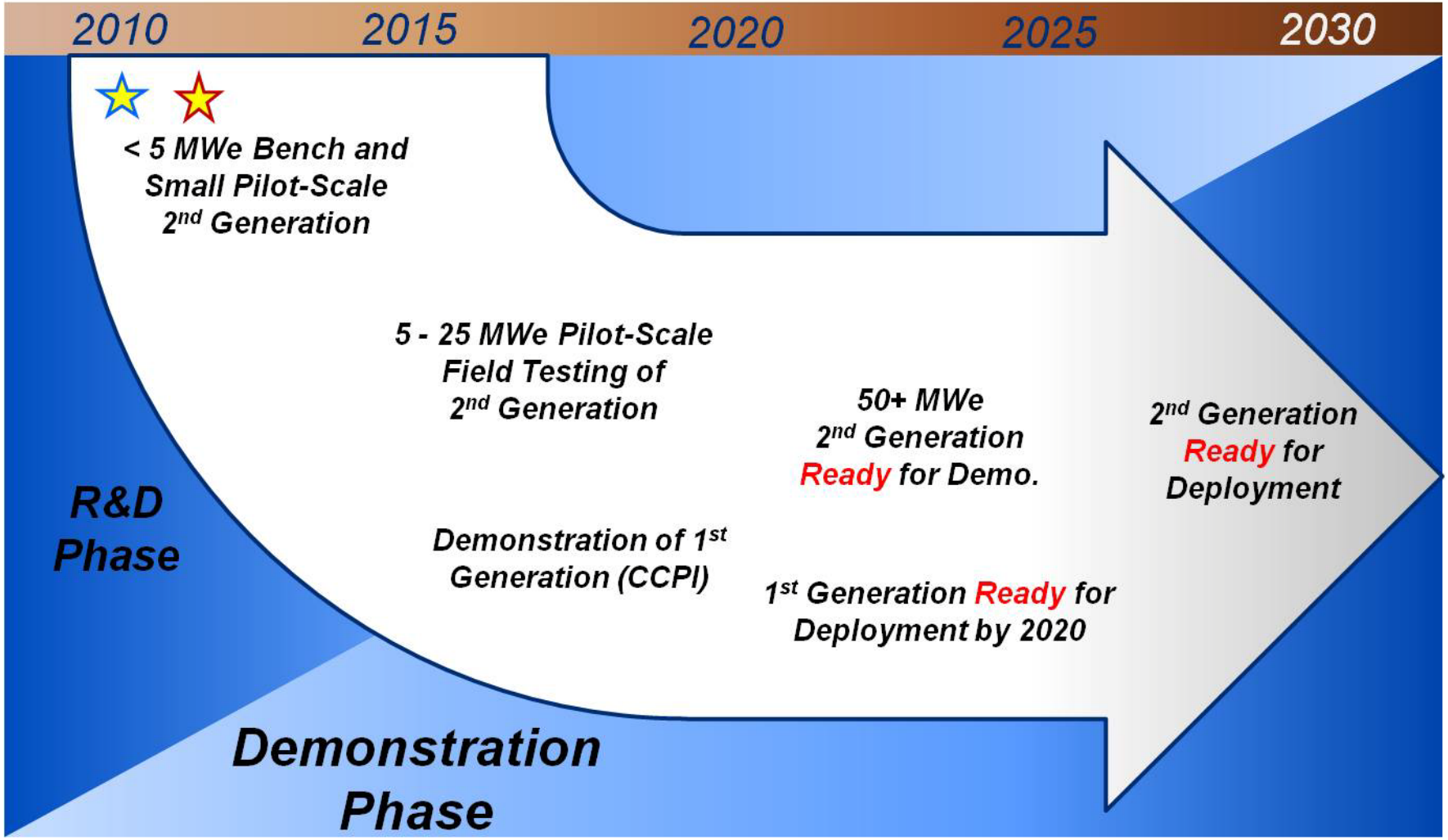

2010 FOA

2011 FOA

Carbon Dioxide Capture R&D Projects

Pre-Combustion

Laboratory/Bench Scale

- < 0.5 MWe
- Simulated or real syngas

1 Solvent

2 Solid Sorbents

7 Membranes

Pilot-Scale

- <0.1 MWe
- Coal derived syngas *

MTR CO_2 Membrane

MTR H_2 Membrane

WPI H_2 Membrane

Parr Reactor Solvent

Post-Combustion

Laboratory/Bench Scale

- < 0.5 MWe
- Simulated or real flue gas

11 Solvents

4 Solid Sorbents

4 Membranes

Pilot Scale

- 0.5 – 5 MWe
- Coal flue gas

Siemens Solvent 2.5 MWe

ADA Sorbent 1 MWe

MTR Membrane 1 MWe

Aker Solvent* 1 MWe

B&W Solvent 0.5 MWe

Oxy-combustion

Laboratory/Bench Scale

- < 0.5 MWe

1 Corrosion Testing

2 Purification

2 Retrofit/Modeling

1 Chemical Looping

Pilot Scale

- 0.5 – 5 MWe

Alstom Oxy-comb. 5 MWe

Jupiter Oxygen 5 MWe

Praxair OTM 1 MWe*

Alstom CLC 1 MWe

Compression

Pilot Scale

- > 0.5 MWe

Ramgen 13,000 hp*

SwRI 3,000 hp

*NCCC

CO_2 Capture Program Goals

By 2020, have ready for <u>demonstration</u>, advanced CO_2 capture technologies that achieve:

Post- and Oxy-combustion
90% CO_2 capture
*Compression, transport, storage**
< 35% increase in COE

Pre-combustion (IGCC)
90% CO_2 capture
*Compression, transport, storage**
< 10% increase in COE

Evaluated and Set by Systems Analyses

Availability analysis of post-combustion carbon capture systems: minimum work input

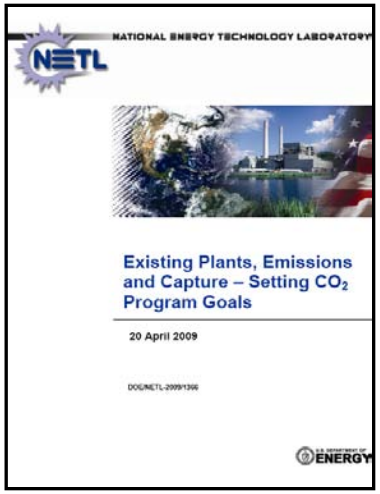

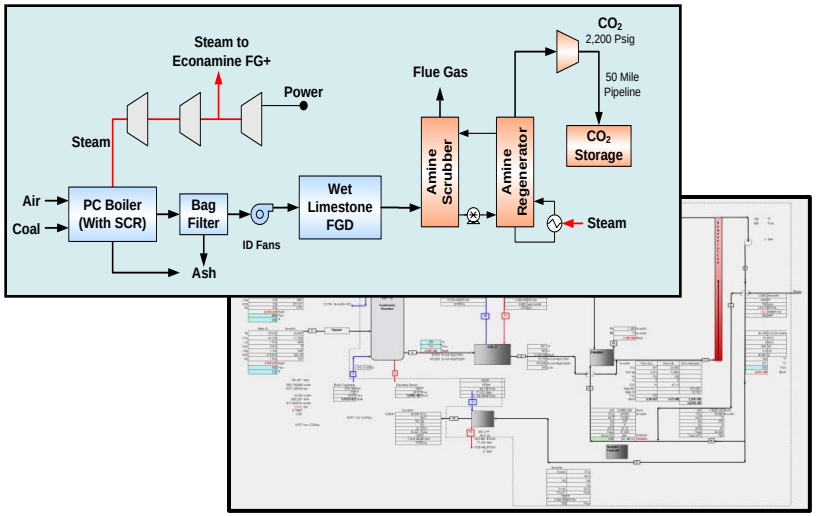

Accomplishments

- **Carbon Capture External Peer Review**
  - **AIChE Independent Review**
  - **16 Projects from Pre-, Post-, Oxy-Combustion Capture & Compression**

- **2011 Competitive Funding Opportunity Announcement**
  - **20 Projects Selected (16 Bench-Scale, 4 Slipstream)**
    - 5 Bench-Scale Solvent
    - 6 Bench-Scale Sorbent
    - 5 Bench-Scale Membrane
    - 4 Slipstream Solvent

	# Projects	DOE	Participant	Total
Laboratory-Scale Solvents	5	$12,455,738	$3,132,312	$15,588,050
Laboratory-Scale Sorbents	6	$16,629,330	$4,362,060	$20,991,390
Laboratory-Scale Membranes	5	$12,196,907	$3,794,763	$15,991,670
Pilot-Scale Solvents	4	$51,667,567	$14,581,818	$66,249,385
Total	20	$92,949,542	$25,870,953	$118,820,495

Bench-scale Project Selections

5 Solvents

- **GE Global Research:** Silicone-based solvent
- **Battelle:** CO_2-Binding Organic Liquids w/Polarity-Swing Regeneration
- **B&W:** Advanced amine-based solvents
- **Carbon Capture Scientific:** Gas Pressurized Stripping Process
- **Novozymes North America:** Enzyme-based solvents + Ultrasonic Regen.

Bench-scale Project Selections

6 Solid Sorbents

- **Georgia Tech Research Corp.:** Polymer supported amine hollow fiber
- **Univ. of North Dakota:** Hybrid sorption via low cost solid sorbents
- **Innosepra:** TSA/PSA solid sorption process
- **RTI International:** Molecular basket solid sorbents
- **W.R. Grace:** Rapid PSA sorption
- **TDA Research:** Low-cost, high capacity physical sorbent

Bench-scale Project Selections

5 Membranes

- **GE Global Research:** Thin film composite hollow fiber
- **Ohio State:** Inorganic/polymer composite membrane
- **Rice University:** Absorber & regenerator membrane contactor
- **MTR Inc.:** Low pressure membrane contactors
- **FuelCell Energy:** Electrochemical membrane

Pilot-Scale Project Selections

4 Solvents

- **Southern Company:** High Efficiency System, HES
  - 25 MWe Slipstream from Southern Company's Plant Barry
  - Waste heat recovery/advanced KS-1 solvent integration
  - Improve thermal energy performance of capture unit by 26%
- **Linde:** Advanced amine-based solvent and scrubbing process
  - 1 MWe at the National Carbon Capture Center
  - BASF's novel amine-based solvent
  - Linde's advanced solvent scrubbing process
- **Neumann Systems Group:** Novel CO_2 absorber system
  - 0.5 MWe slipstream from the Colorado Springs Utilities Drake #7 Unit
  - Modular scrubber system with advanced nozzles ↓ equipment size more than 50%
  - Scrubber capital cost ↓ more than 50%
- **University of Kentucky:** Adv. capture solvent process
  - 0.7 MWe slipstream from LG&E's EW Brown Station Unit #2
  - Hitachi Solvent + Scrubber Process Integration

National Carbon Capture Center at the Power Systems Development Facility (PSDF)

Goal
Develop technologies under realistic conditions that will reduce the cost of advanced coal-fueled power plants with CO_2 capture

Post-combustion

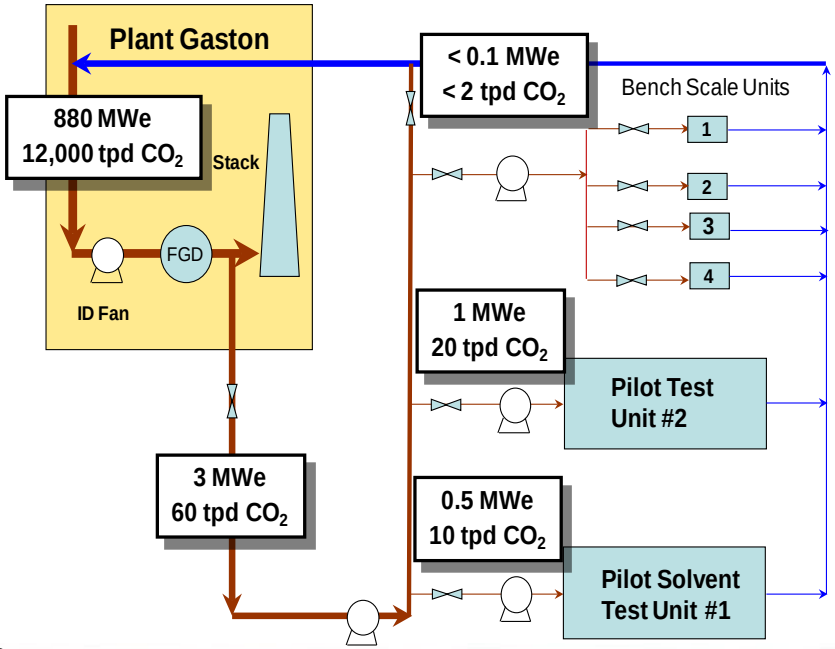

Pre-combustion (IGCC)

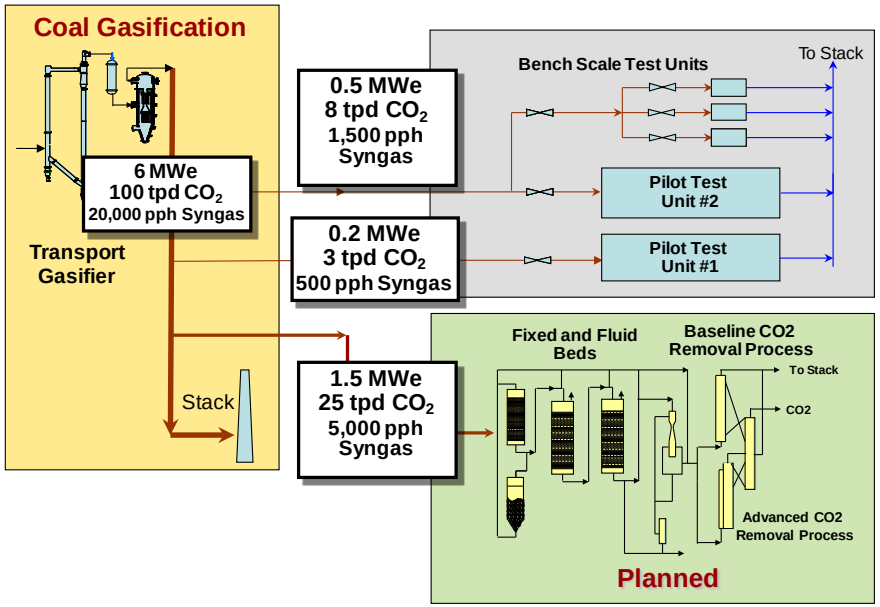

DOE/NETL Advanced CO_2 Capture R&D Program:
Technology Update (May 2011)

- This comprehensive handbook provides an update on DOE/NETL R&D efforts on advanced CO_2 capture technologies for coal-based power systems.
- Prepared by the Existing Plants and Sequestration R&D Programs, the report tracks the progress of DOE/NETL pre-combustion, post-combustion, and oxy-combustion technologies for CO_2 capture.
- The handbook is available for download on the NETL website at:

http://www.netl.doe.gov/technologies/coalpower/ewr/pubs/CO2Handbook/

Looking Forward

FY2012 Oxy-Combustion Capture Solicitation

- *"Advanced Oxy-combustion Technology Development and Scale-up for New and Existing Pulverized Coal Power Plants"*

- Fall 2011/Winter 2012- FOA scheduled for release

- Summer 2012 - Project selections

- Total funding available - ~$30 - $40 million

- **Areas of Interest: TBD**

Looking Forward
Big Picture

- **CO_2 Regulations**
  - **Can't control**
  - **Can't allow to become a distraction**

- **Stick to Mission**
  - **Advancing research and development**
  - **Get technologies in the field**
    - Learn by doing
  - **Fossil energy focus**
  - **Be cognizant of application to other platforms (industrial apps)**

Thanks for Participating!!

arpa·e
3H Company
AKERMIN
THE UNIVERSITY OF UTAH
UNIVERSITY OF NOTRE DAME
ADA ENVIRONMENTAL SOLUTIONS
gti
AIR PRODUCTS
AIR LIQUIDE
PRAXAIR
MTR Membrane Technology & Research
TDA Research
FLUOR
ALSTOM
SRI International
Argonne NATIONAL LABORATORY
UNIVERSITY OF MINNESOTA
RTI INTERNATIONAL
ASU ARIZONA STATE UNIVERSITY
RAMGEN POWER SYSTEMS
PENNSTATE
REACTION ENGINEERING INTERNATIONAL
EERC Energy & Environmental Research Center® Putting Research into Practice
JUPITER OXYGEN CORPORATION
hydrogen energy
B&W thebabcock&wilcoxcompany a McDermott company
SUMMIT POWER
The University of Akron
AEP AMERICAN ELECTRIC POWER
ION ENGINEERING
URS
GE Global Research
United States - India - China - Germany
NJIT New Jersey's Science & Technology University
SOUTHERN COMPANY
Southwest Research INSTITUTE
BERKELEY LAB LAWRENCE BERKELEY NATIONAL LABORATORY
FOSTER WHEELER
PALL Pall Corporation
ILLINOIS UNIVERSITY OF ILLINOIS AT URBANA-CHAMPAIGN
Georgia Tech
THE OHIO STATE UNIVERSITY
SIEMENS
Berkeley UNIVERSITY OF CALIFORNIA
Leucadia Energy

For More Information About the NETL Existing Plants Program

- **NETL website:**
  - **www.netl.doe.gov**

Reference Shelf

- **Annual CO2 Capture Meeting**

Jared P. Ciferno
Technology Manager,
Innovation for Existing Plants
National Energy Technology Laboratory
U. S. Department of Energy
(Tel) 412 386-6002
jared.ciferno@netl.doe.gov

- **Office of Fossil Energy website:**
  - **www.fe.doe.gov**

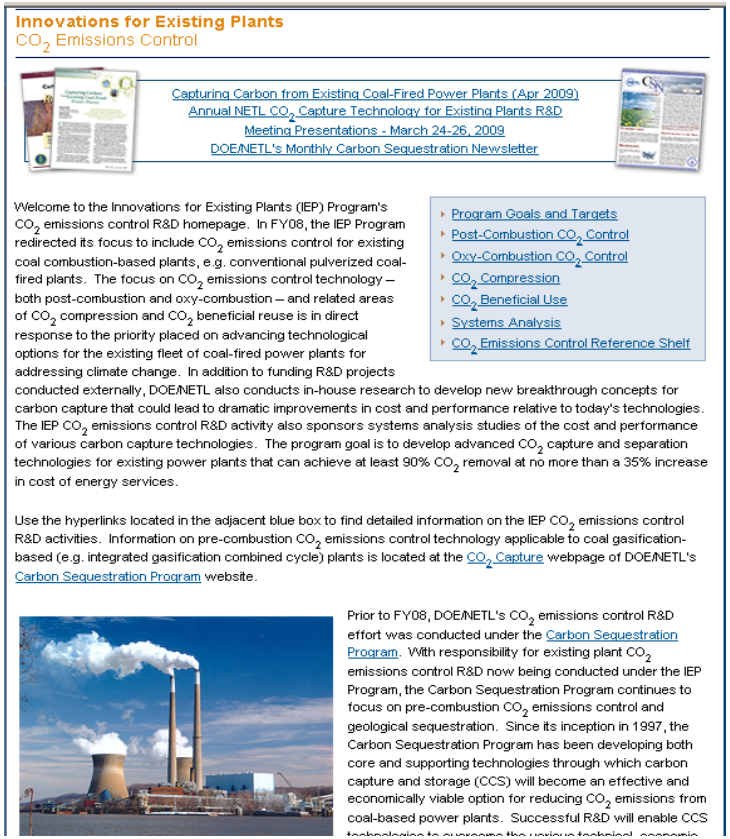

Innovations for Existing Plants
CO_2 Emissions Control

Capturing Carbon from Existing Coal-Fired Power Plants (Apr 2009)
Annual NETL CO_2 Capture Technology for Existing Plants R&D Meeting Presentations - March 24-26, 2009
DOE/NETL's Monthly Carbon Sequestration Newsletter

- Program Goals and Targets
- Post-Combustion CO_2 Control
- Oxy-Combustion CO_2 Control
- CO_2 Compression
- CO_2 Beneficial Use
- Systems Analysis
- CO_2 Emissions Control Reference Shelf

Welcome to the Innovations for Existing Plants (IEP) Program's CO_2 emissions control R&D homepage. In FY08, the IEP Program redirected its focus to include CO_2 emissions control for existing coal combustion-based plants, e.g. conventional pulverized coal-fired plants. The focus on CO_2 emissions control technology – both post-combustion and oxy-combustion – and related areas of CO_2 compression and CO_2 beneficial reuse is in direct response to the priority placed on advancing technological options for the existing fleet of coal-fired power plants for addressing climate change. In addition to funding R&D projects conducted externally, DOE/NETL also conducts in-house research to develop new breakthrough concepts for carbon capture that could lead to dramatic improvements in cost and performance relative to today's technologies. The IEP CO_2 emissions control R&D activity also sponsors systems analysis studies of the cost and performance of various carbon capture technologies. The program goal is to develop advanced CO_2 capture and separation technologies for existing power plants that can achieve at least 90% CO_2 removal at no more than a 35% increase in cost of energy services.

Use the hyperlinks located in the adjacent blue box to find detailed information on the IEP CO_2 emissions control R&D activities. Information on pre-combustion CO_2 emissions control technology applicable to coal gasification-based (e.g. integrated gasification combined cycle) plants is located at the CO_2 Capture webpage of DOE/NETL's Carbon Sequestration Program website.

Prior to FY08, DOE/NETL's CO_2 emissions control R&D effort was conducted under the Carbon Sequestration Program. With responsibility for existing plant CO_2 emissions control R&D now being conducted under the IEP Program, the Carbon Sequestration Program continues to focus on pre-combustion CO_2 emissions control and geological sequestration. Since its inception in 1997, the Carbon Sequestration Program has been developing both core and supporting technologies through which carbon capture and storage (CCS) will become an effective and economically viable option for reducing CO_2 emissions from coal-based power plants. Successful R&D will enable CCS