Lab Scale and Computational Studies of Chemical Looping Combustion for Efficient Carbon Capture

the ENERGY lab

Website: www.netl.doe.go
Customer Service: 1-800-553-7681

Goals and Objectives

- **Program Goal**
  - Achieve 90% CO_2 capture at less than 35% increase in cost of electricity
- **NETL/Office of Research and Development (ORD)**
  - Establish informal working group with other organizations working in CL technology
  - Improve multiphase CFD models at component and system levels
  - Establish an experimental integrated reacting looping facility for model validation, fuel reactor design studies, and carrier evaluation
  - Characterize natural commodity carrier performance and the effects of contaminants
  - Evaluate novel CL applications

Chemical Looping Coal Combustion

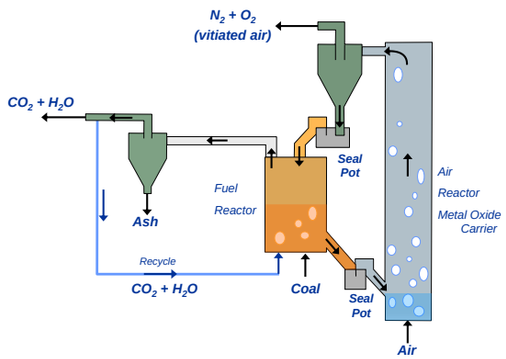

CFD Modeling of CL Coal Combustion

- **Progress and Current Status for FLUENT model**
  - Solid Fuel CLC Simulations
  - Petcoke Gasification/Combustion

Leion, Mattisson, and Lyngfelt, Fuel, 2007

Experimental Parameters	
Fluidization gas ($N_2/H_2O/O_2$)	0.55 m/s, 50 u_{mf}
Petcoke	0.2 g
Solids	20 g
Carrier	$Fe_2O_3/MgAl_2O_4$ 60/40 wt%

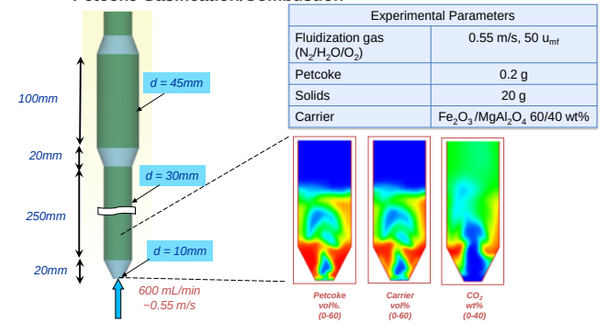

CFD Model for NETL Reactor Design

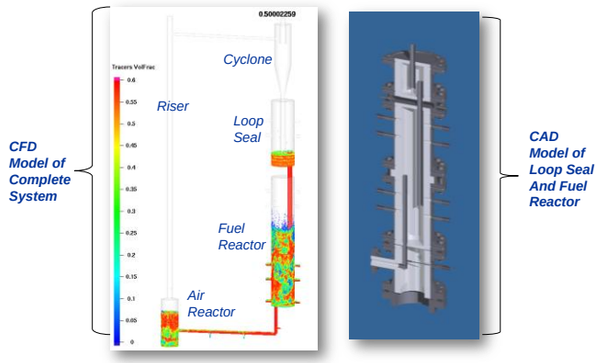

NETL Supported CL Projects

NETL

External CL Projects | **NETL-Office of R&D**

Alstom Power | Ohio State University | University of Utah | Western Kentucky University | University Research Alliance

Externally Funded NETL Projects

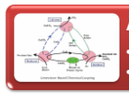

Alstom Power
- Calcium carrier
- Direct coal combustion

Ohio State University
- Fe pelletized carrier
- Also ARPA-E demonstration 250kW syn-gas CL

University of Utah
- Clean Energy Program
- Cu carrier (Oxygen-Uncoupling Mechanism)

Western Kentucky University
- Copper-based carrier preparation
- ARRA Project

CL Steam Cycle With Vitiated Air Recirculation
(Inverted Brayton Cycle Application)

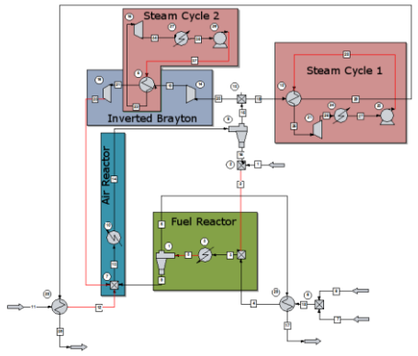

Solid/Solid Separation

- **Separation of ash from oxygen carrier**
  - Increase carbon conversion
  - Reduce carbon leakage to AR
- **Preliminary results**
  - Density difference primary driver
  - CuO = 3.3g/cm³
  - Acrylic Powder = 1.19g/cm³
  - Terminal velocity of Acrylic
  - Collection of acrylic and fine CuO was observed

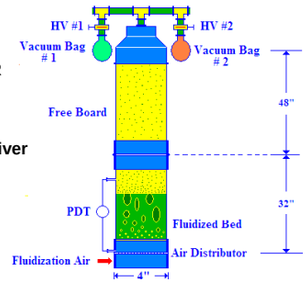

NETL/ORD Planned Projects

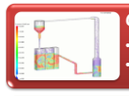

CFD Simulation and Multiphase Modeling
- Close interaction with experiments
- Improve overall system reliability and control

Develop Small Integrated CL Reactor Facility
- Direct coal process with solid-solid separation
- Validation data for CFD and carrier evaluation

Carrier Characterization and Development
- Low cost "natural" carriers
- Effects of contaminants

Novel CL Applications
- CL for oxygen separation
- CL for CO_2 reforming (University of Pittsburgh)

U.S. CL Working Group

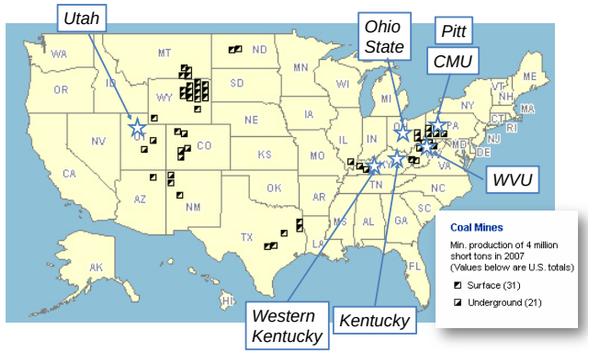

System Studies: Inverted Brayton Combined Cycle Results

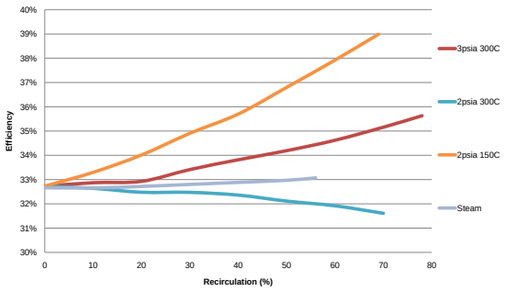

150C, 2psia, 69% Recycle, Efficiency 39%

Summary

- **NETL is actively supporting Chemical Looping Technologies**
  - External project funding
  - Internal NETL Office of R&D
- **NETL/Office of R&D (ORD) is . . .**
  - Promoting informal U.S. CL Working Group
  - Coupling multiphase CFD modeling with experiments
  - Investigating solid -solid separation approaches
  - Evaluating novel CL applications such as vitiated air recirculation to increase cycle efficiencies above limits of a conventional steam cycle

U.S. DEPARTMENT OF ENERGY

NATIONAL ENERGY TECHNOLOGY LABORATORY

Albany, OR • Fairbanks, AK • Morgantown, WV • Pittsburgh, PA • Houston, TX

0036 – DB – 09/10 - Straub