Low Cost Sorbent for Capturing CO_2 Emissions Generated by Existing Coal-fired Power Plants

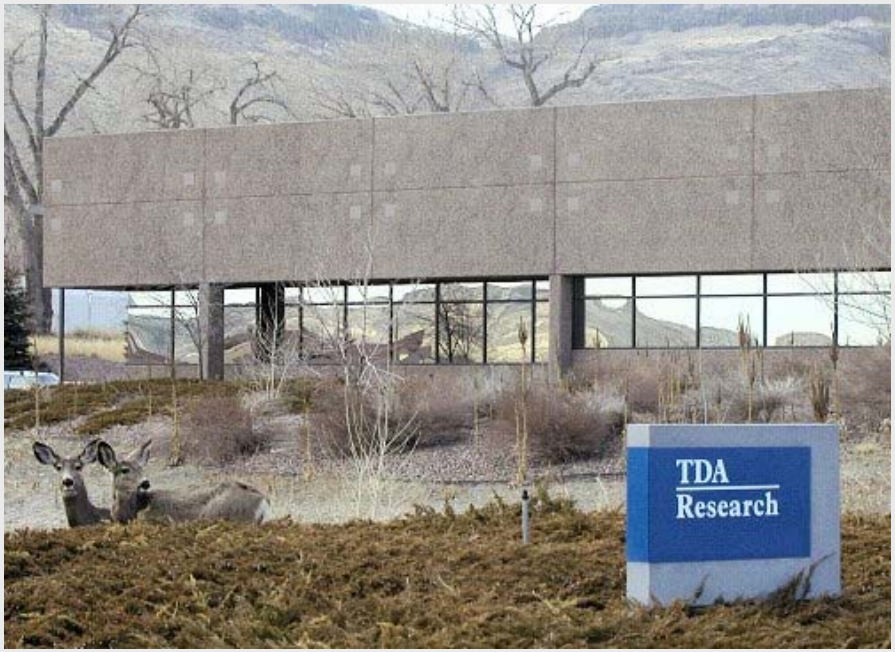

March 24, 2009

Dr. Jeannine Elliott

Dr. Girish Srinivas

Contract #DE-NT0005497

TDA Research Inc. • Wheat Ridge, CO 80033 • www.tda.com

About TDA

- **Began operations in 1987**
- **Today**
  - 80 employees, over 60% with advanced degrees
- **Facilities**
  - Combined 50,000 ft^2 in Wheat Ridge and Golden, CO

  Areas
  - New materials development
  - Processes for Energy/chemicals
- **Business Model**
  - Perform R&D, primarily under government contract
  - Secure intellectual property
  - Commercializes technology by licensing, joint ventures, internal business units

TDA Research

Project Overview

- **Funding - Total Project $1,373,380**
  - DOE: $1,097,839
  - Cost Share: $276,541
- **Project Performance Dates**
  - Start Date: November 1, 2008
  - End Date: October 31, 2011
- **Project Partners**
  - TDA Research, Inc (TDA)
  - Babcock & Wilcox (B&W)
  - Louisiana State University (LSU)
  - Western Research Institute (WRI)

Post-Combustion CO_2 Capture

- **Dry, solid sorbent**
  - Regenerable
- Downstream of sulfur removal

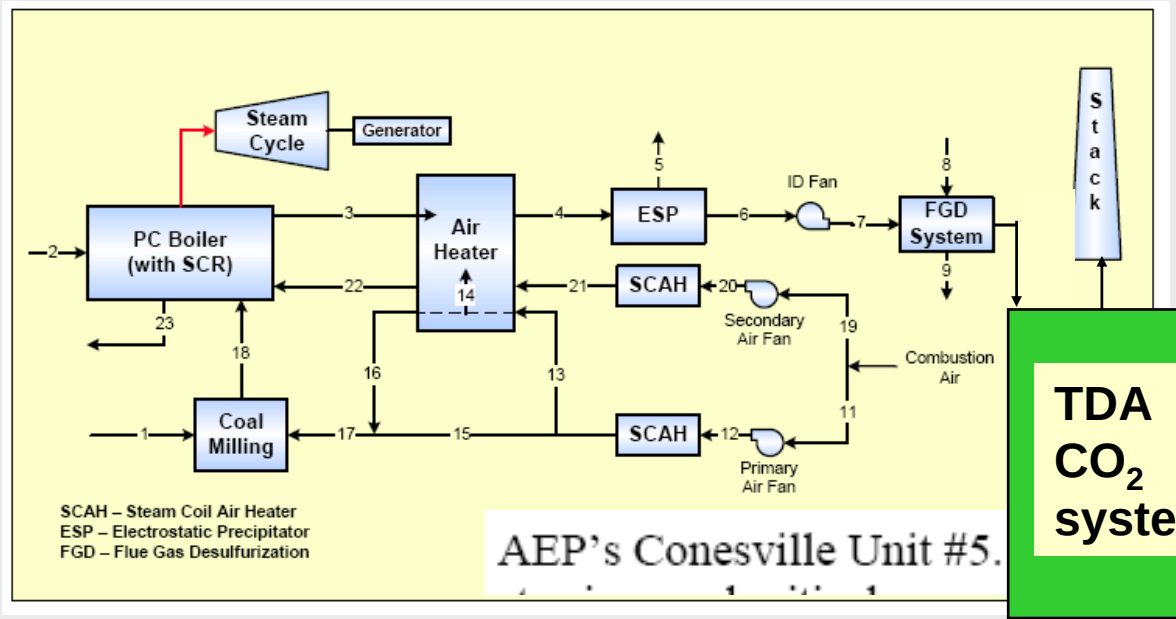

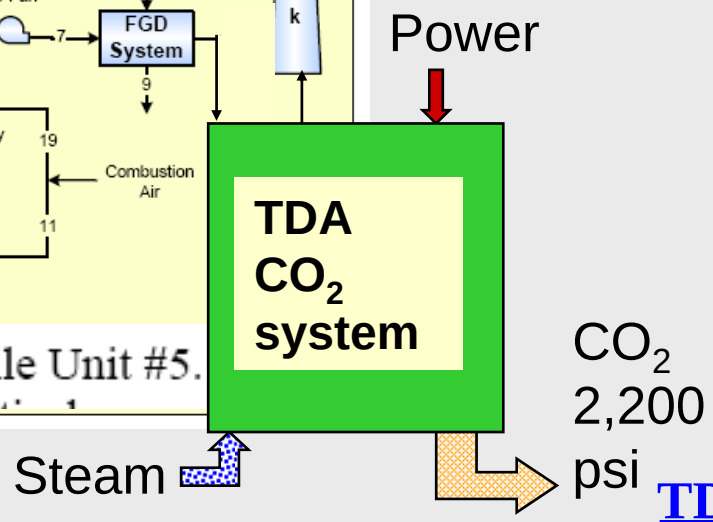

TDA Research

TDA's Sorbent-based CO_2 Emission Control for Flue Gas

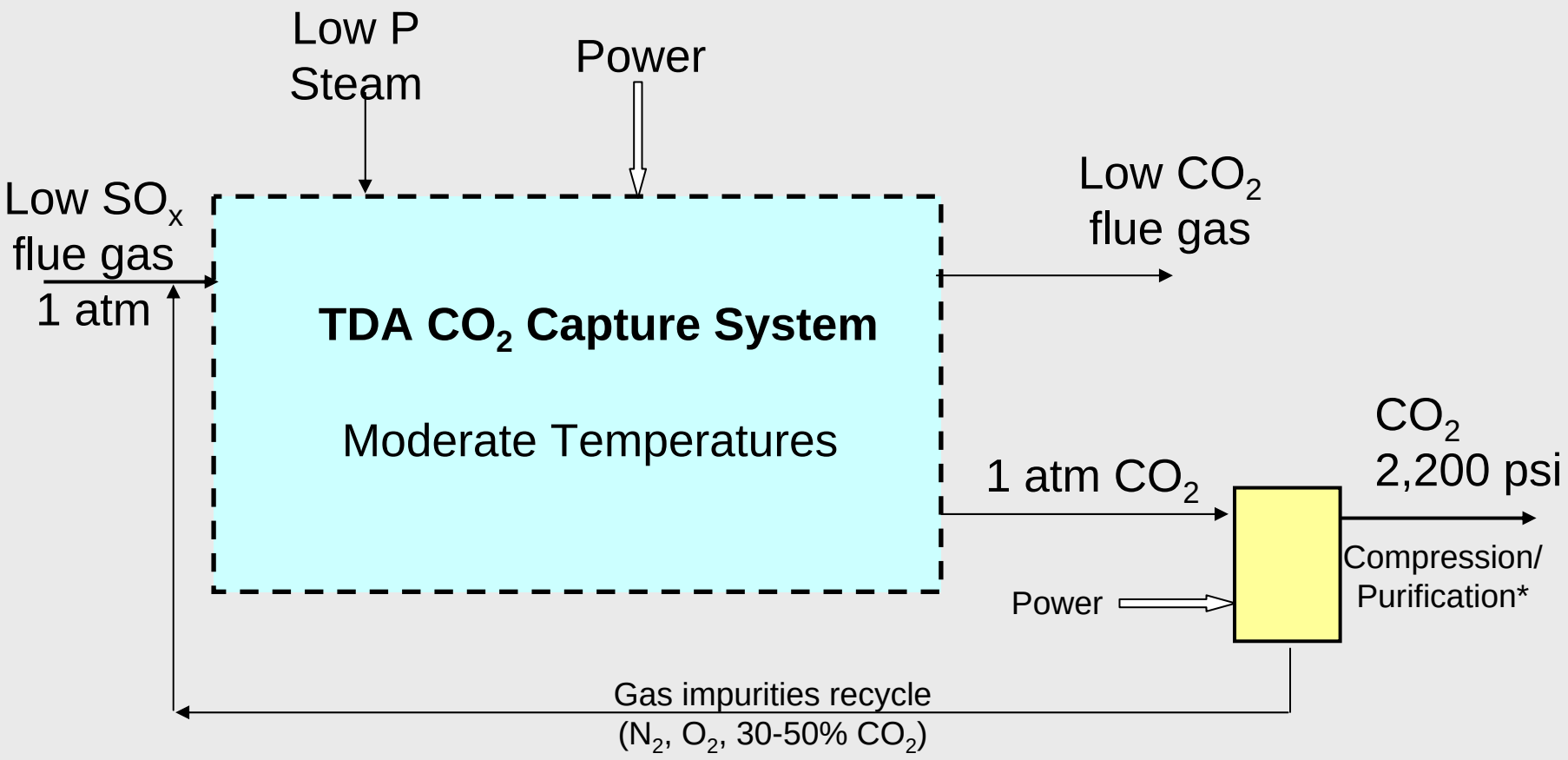

*multiple stages

TDA Research

Advantages – Low Parasitic Losses

Comparison to Theoretical Minimum

- Capturing dilute CO_2 and compressing it is energy intensive
- TDA calculated the theoretical energy assuming an isothermal compression
- Min. parasitic power loss of 13.46%
- TDA's Sorbent approach has estimated parasitic loss of 20.7%
- About half the power is for CO_2 compression and purification

Power Loss Associated with Energy Needed to	**Theo-retical**	**TDA System**
Concentrate CO_2 from 13.84% to 1 atm	3.05%	8.45%
Compress CO_2 to 150 atm	6.41%	8.25%
Transport and sequester	4.0%	4.0%
Total	13.46%	**20.7%**

TDA Research

Preliminary Economics Favorable

- **\$18.76/ton CO_2 captured**
- **\$23.02/ton CO_2 avoided**
- **31.7% increase in energy services**

Challenges of CO_2 Capture

- **Sorbent challenges**
  - Effective sorbent made from low cost raw materials
  - Long sorbent cyclic life-time
- **System design challenges**
  - High overall system efficiency
  - Minimize parasitic demands
- **Real-life challenges**
  - How does it work on a real coal derived flue gas?

Project Objectives

- **Year 1: Show technical merit**
  - Demonstrate effective performance of low cost sorbent
  - Use Aspen model to calculate system efficiency
- **Year 2: Characterize and Optimize Design**
  - Measure sorbent cyclic lifetime and effect of contaminants
  - Optimize system design
  - Refine process economics calculations
- **Year 3: Demonstrate on coal derived flue gas**
  - Construct bench-scale test unit
  - Show performance on real coal-derived flue gas stream

Work Plan – Year 1

- **Project Management (TDA)**
- **Sorbent Development and Production (TDA)**
  - Raw material sources evaluation
  - Optimization of composition
  - Sorbent production optimization
- **Sorbent Testing (TDA)**
  - Sorbent characterization and performance testing
- **Process Design and Modeling (TDA, LSU)**
  - CO_2 capture process design (steam source, CO_2 compression, heat sources
  - ASPEN model development at LSU
- **Construction of cold flow reactor model (TDA)**
  - Fabrication and evaluation of a model of the proposed bed design

TDA Research

Work Plan – Year 2

- **Program Management (TDA)**
- **Long-term Cycling Experiments (TDA)**
  - 1,500 hr sorbent cycling test
  - Evaluation of SO_x and NO_x contaminants
  - Sorbent attrition and reconditioning evaluated
- **Construction and testing of Lab-scale reactor (TDA)**
  - Sorbent characterization and performance testing
- **System Analysis and Process Evaluation (TDA, LSU, B&W)**
  - Aspen model updated with latest experimental data
  - Full system and economic evaluation

Work Plan – Year 3

- **Program Management (TDA)**
- **Engineering Design for Bench-scale Unit (TDA)**
  - P&ID development
  - Test plan created
- **CO_2 Capture Bench-scale Unit Fabrication (TDA)**
  - Construction, installation and shake-down
- **Bench-scale testing (TDA)**
  - Sorbent production and testing in bench-scale unit
- **Evaluation at Western Research Institute (TDA, WRI)**
  - CO_2 capture experiments on real-coal derived flue gas
- **System Analysis and Process Evaluation (TDA, LSU, B&W)**
  - Final system and economic evaluation

TDA Research

Program Schedule

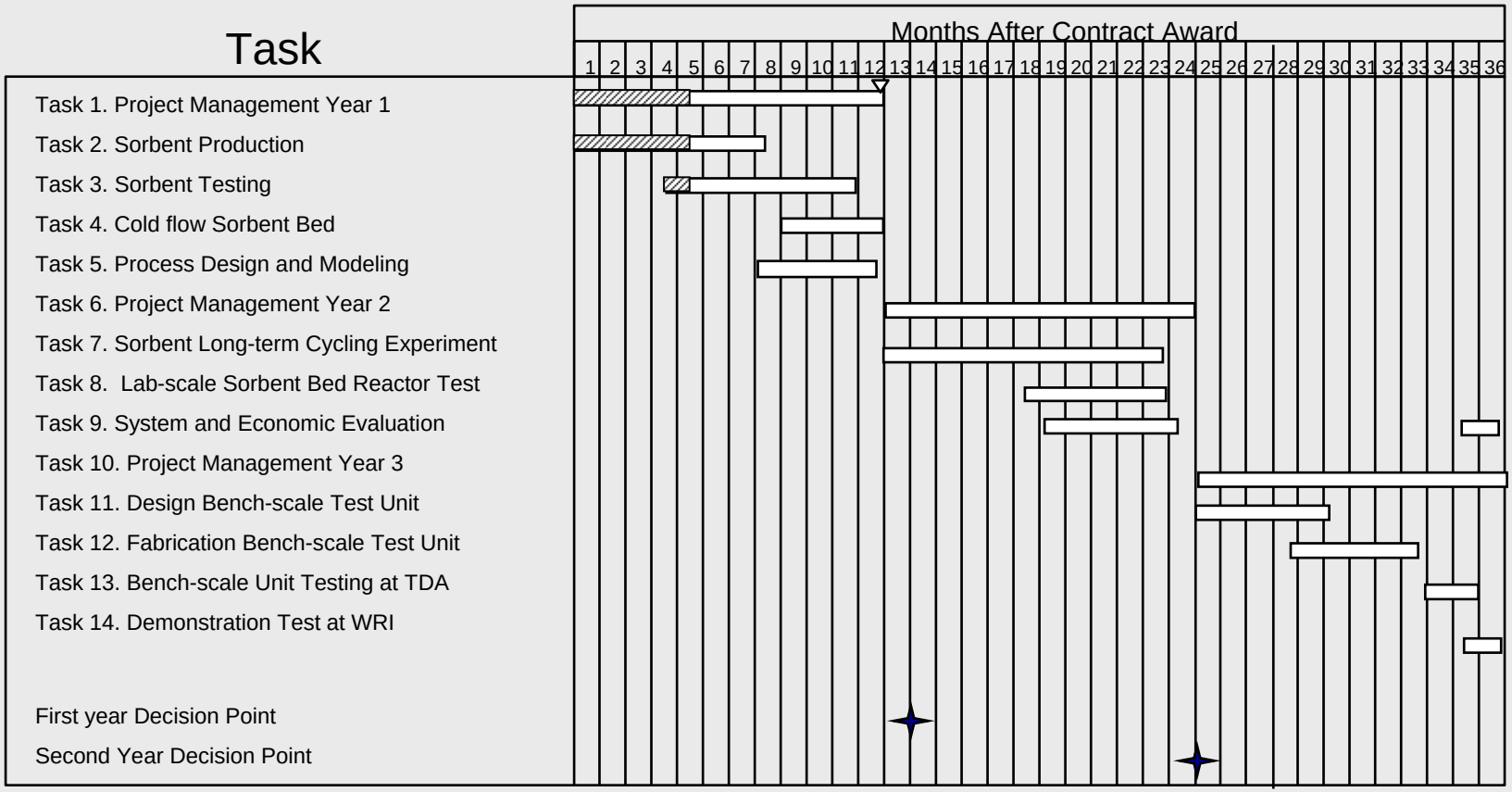

LEGEND: Plan
Revised Plan
Scheduled Milestone
Decision Point

TDA Research

TDA Research, Inc

- TDA is the prime contractor and technology developer
  - TDA will direct the effort and lead technical development
- Key tasks to be performed at TDA
  - Optimization of low-cost sorbent
  - Evaluation of the sorbent process using a simulated flue gas with NO_x and SO_x.
  - Determining sorbent replacement rate and cost
  - Overall system design and approach
  - Construction of test unit

Babcock and Wilcox

- Evaluate and comment on test results
- Provide input to set up and evaluate process and economic model
- Provide input on real world process conditions
- Assess feasibility of technology for commercialization

Louisiana State University

- Chemical Engineering Department at LSU has strong research program in process modeling and simulation of industrial chemical processes

LSU's role:

- Subcontractor
- LSU will develop Aspen model of pulverized coal plant with TDA's CO_2 capture system
- First year's modeling results will guide overall system design and optimization
- Second year's modeling will determine economics of the system based on extensive experimental data and best system design

Western Research Institute

- WRI is multi-million dollar, not-for-profit research organization focused on advanced energy systems and environmental technologies

WRI's role:

- Subcontractor
- WRI's coal combustion test facility can replicate a pulverized coal fired utility boiler
- In the third year, WRI will test the bench-scale unit at their Wyoming facility
- Demonstrate the technology on a real coal derived flue gas

Sorbent Testing Apparatus

- Existing apparatus modified for this project
- 300 cc fixed bed reactor
- Automated equipment for unattended operation
- Online analyzer for continuous CO_2 measurement

TDA Research

Sorbent Screening Test Data
Cycling Data

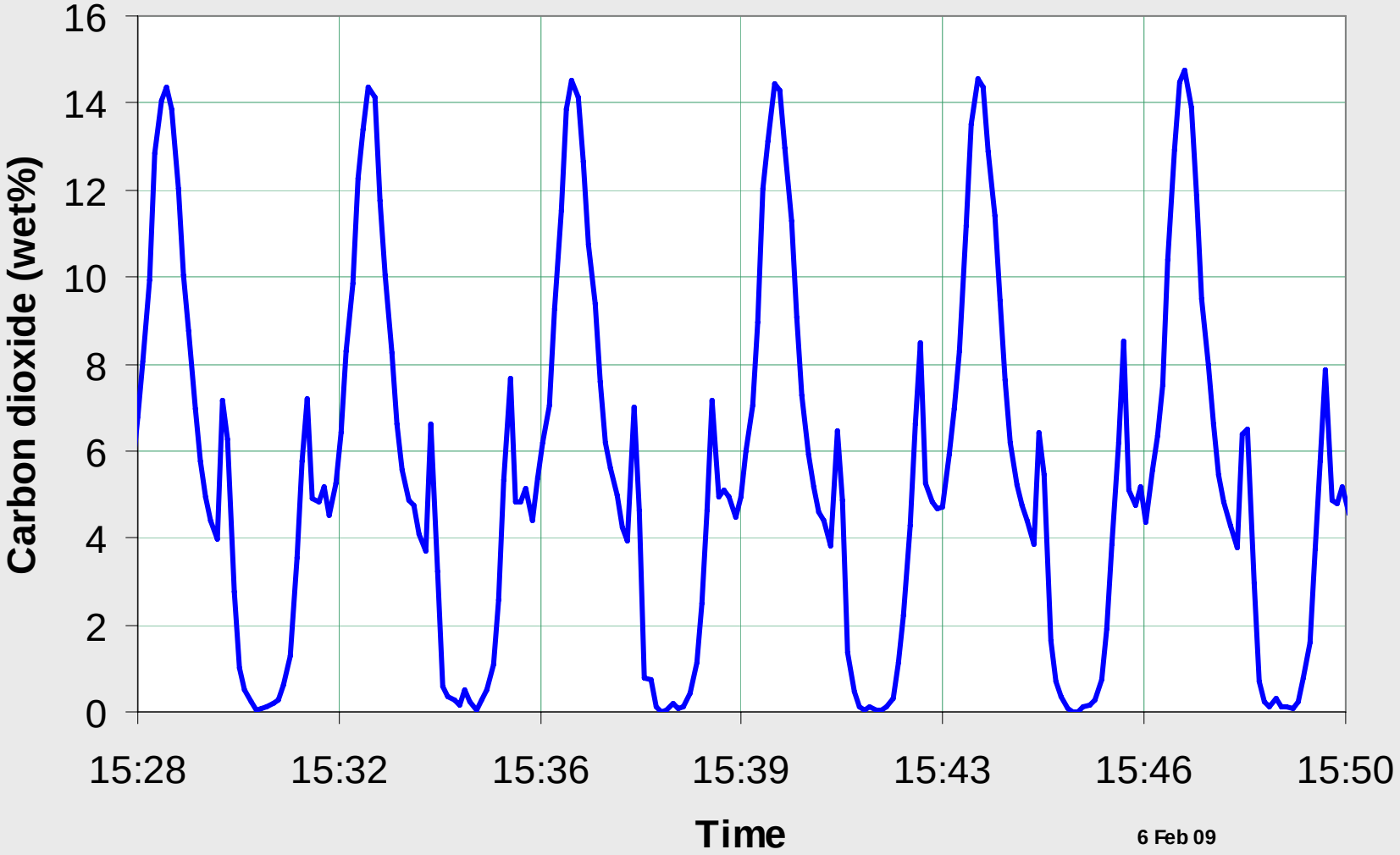

Simulated flue gas: 13.8% CO_2, 9% water, 77.2% N_2

TDA Research

Commercialization

- TDA proposes to develop and demonstrate the technology
- TDA will seek patent protection
- Technology will be made available through a license
- We have working relationships with key collaborators to facilitate commercialization

Summary

- TDA, in collaboration with B&W, LSU, and WRI is developing a sorbent-based CO_2 capture process for coal fired power plants
- Cost estimates for CO_2 capture using this process are favorable
- Technical progress to date has been promising

Acknowledgments

- DOE project funding
- Collaborators
  - B&W
  - LSU
  - WRI