NATIONAL ENERGY TECHNOLOGY LABORATORY

Proceedings

October 5–6 2009

University of Maryland
Inn & Conference Center
College Park, MD 20742

NATIONAL ENERGY TECHNOLOGY LABORATORY

DISCLAIMER

This report was prepared as an account of work sponsored by an agency of the United States Government. Neither the United States Government nor any agency thereof, nor any of their employees, makes any warranty, express or implied, or assumes any legal liability or responsibility for the accuracy, completeness, or usefulness of any information, apparatus, product, or process disclosed, or represents that its use would not infringe privately owned rights. Reference therein to any specific commercial product, process, or service by trade name, trademark, manufacturer, or otherwise does not necessarily constitute or imply its endorsement, recommendation, or favoring by the United States Government or any agency thereof. The views and opinions of authors expressed therein do not necessarily state or reflect those of the United States Government or any agency thereof.

TABLE OF CONTENTS

1.0 INTRODUCTION 1

1.1 Overview 1

1.2 Workshop Goals and Objectives 1

2.0 WORKSHOP SUMMARY 2

3.0 BREAKOUT SESSIONS 3

3.1 Common Research Themes 4

3.2 Solid Adsorbents/Absorbents 4

3.2.1 New Mechanisms for Releasing CO_2 from Solid Sorbents 5
3.2.2 Functionalized Solid Substrates 5
3.2.3 Low Temperature Sorbents 6
3.2.4 Viability Assessment of Solid Absorbents 6
3.2.5 Calcium-Based Solid Absorbents 6

3.3 Liquid Adsorbents, Solvents 6

3.3.1 Amine Based Systems 7
3.3.2 Ammonia Based Systems 7
3.3.3 Silicon Based Systems 8
3.3.4 Chemically Tailored Ionic Liquids 8
3.3.5 Binding Organic Liquids 8
3.3.6 Catalysts for Buffered Aqueous Systems 8
3.3.7 Command and Electrochemical Sorption 9
3.3.8 Cross-cutting Themes 9

3.4 Membrane Concepts 9

3.4.1 Known Membranes 10
3.4.2 Supported Ionic Liquid (Apply to Most Materials) 10
3.4.3 Develop Fluorinated-Based Polymer with Higher Permeability and Selectivity 10

3.5 Chemical and Biological Analogues 11

3.5.1 Amino Acids and Peptide Salts for CO_2 Removal 11
3.5.2 Carbonic Anhydrase Memetics 11
3.5.3 Algae for CO_2 Capture 12
3.5.4 Develop a Biological Analogue for the Production of Oxygen on a Large Scale for Oxy-combustion 12
3.5.5 Process Steam Conversion of Flyash to Carbonation Materials 12
3.5.6 Develop Bio-Inspired Synthetic Catalysts to Capture CO_2 12
3.5.7 Common Themes 12

3.6 Cross-cutting Ideas 13

3.6.1 Oxy-Fuels 13
3.6.2 Chemical Looping 14
3.6.3 Computation and Characterization (Multi-Scale Physics) 14
3.6.4 CO_2 Compression 15

3.6.5 Alternatives to Sequestration (CO_2 as Feedstock) 15
3.6.6 Speciation and Fate of Trace Elements 15
3.6.7 Scale-up and Technology Development 15
3.6.8 Alternative Regeneration Schemes 16

RECOMMENDATIONS/NEXT STEPS 17

Appendix A: Carbon Capture 2020 Workshop Agenda A-1

Appendix B: Carbon Capture 2020 Workshop Attendees B-1

Appendix C: Carbon Capture 2020 Workshop Posters and Presenters C-1

Appendix D: List of Participants for Each Breakout Session D-1

Appendix E: Description of Pulverized Coal Power Plant Conditions for CO_2 Capture Process Researchers E-1

1.0 INTRODUCTION

1.1 Overview

On October 5–6, 2009, the U.S. Department of Energy's (DOE) Office of Fossil Energy (FE), its National Energy Technology Laboratory (NETL), and the Office of Basic Energy Science (BES) sponsored the Carbon Capture 2020 Workshop. The Workshop was held at the Inn & Conference Center, University of Maryland, College Park, and was attended by 86 participants from DOE, National Laboratories, industry, academia, other federal agencies, and research institutes. The Workshop agenda is shown in Appendix A, and a listing of the participants is provided in Appendix B.

The primary objective of the Carbon Capture 2020 Workshop was to bring together researchers from the aforementioned organizations to discuss a broad spectrum of carbon capture research, as well as its impact on sequestration, and potential collaborations that could provide economic carbon capture systems by the year 2020. The Carbon Capture 2020 Workshop also highlighted current FE and BES research in carbon dioxide (CO_2) capture in the following technical areas: 1) Solid Adsorbents/Absorbents; 2) Liquid Adsorbents and Solvents; 3) Membrane Concepts; 4) Chemical and Biological Analogues; and 5) Cross-cutting Ideas.

Following presentations of ongoing FE and BES research in CO_2 capture, the participants formed breakout sessions focused on the five aforementioned CO_2 capture areas to discuss in greater detail: 1) known research and development (R&D) activities by technology type; 2) the relative maturity of this R&D; and 3) additional R&D (basic and/or applied) required to enable the technology to mature towards full-scale commercialization and demonstration.

1.2 Workshop Goals and Objectives

The goals of this Carbon Capture 2020 Workshop included identifying potential areas for collaboration across FE and BES research activities aimed at accelerating development of the best ideas for CO_2 capture within various time frames, including near-term (by 2020) and long-term (beyond 2020). To develop these ideas, a series of breakout sessions was planned, during which the participants were challenged to: 1) communicate the scale and nature of the problem to be addressed; 2) identify what parameters need to be defined for research activities; 3) discuss the potential of new ideas emerging from basic research; and 4) describe the status of existing research.

A major emphasis of this workshop, for which FE took the lead, was to identify the most promising post-combustion capture technologies for deployment by 2020. BES is planning a workshop, Carbon Capture Beyond 2020, for early 2010. The desired outcome of these two workshops is a technology roadmap for coordinated efforts that will positively impact CO_2 capture by 2020 and beyond. The roadmap will identify ongoing research projects, propose and critique modeling approaches that could quickly assess the full-scale performance of new concepts, and describe research pathways for basic and applied research goals.

2.0 WORKSHOP SUMMARY

The Carbon Capture 2020 Workshop began on October 5, 2009, with introductions by Brad Tomer, NETL, DOE, and Harriet Kung, BES DOE.

Dr. James J. Markowsky, Assistant Secretary, Office of Fossil Energy, DOE, and Dr. William Brinkman, Director, Office of Science, DOE, provided comments and overviews of ongoing FE and BES carbon capture research, respectively. Drs. Markowsky and Brinkman also discussed the rationale for holding this workshop from the Fossil Energy and Basic Energy Sciences perspectives, respectively, and provided insights into the desired outcomes of the workshop.

Jared Ciferno, of NETL's Office of Coal Power R&D, presented further information on the FE Carbon Capture Program, which focused on CO_2 Capture from existing power plants. Geo Richards, of NETL's Office of Research and Development, discussed the status and direction of research activities in CO_2 capture at NETL.

Mary Galvin from the Office of Basic Energy Sciences gave a report on the BES perspective for post-combustion CO_2 capture beyond 2020. Berend Smit of the University of California, Berkeley, followed with an overview of the carbon capture research at the Energy Frontier Research Center (EFRC).

John Marano, of JM Energy Consulting, Inc., gave a presentation describing a typical pulverized coal power plant configuration, with information on flue gas conditions, heat flows, and scale of operation. Brad Adams, of Reaction Engineering International, presented an update on oxy-fuel combustion applied to coal-fired power plants. Finally, Madhava Syamlal, of NETL's Office of Research and Development, provided descriptions of modeling and simulation techniques for facilitating development of advanced carbon capture technologies.

The introductory session, described above, was followed by an early afternoon Poster Session; poster participants were first invited to a give brief presentation on their research initiatives (no more than two slides) on advanced CO_2 capture concepts. The list of Poster Session papers and presenters is contained in Appendix C. These presentations, those given in the introductory session, and the results of the Breakout Sessions discussed below, are available at *http://www.netl.doe.gov/publications/proceedings/09/CC2020/index.html*.

Following the Poster Session, the participants split into five Breakout Sessions, focusing on the previously discussed topics: 1) Solid Adsorbents/Absorbents; 2) Liquid Adsorbents and Solvents; 3) Membrane Concepts; 4) Chemical and Biological Analogues; and 5) Cross-cutting Ideas. These breakout sessions were adjourned at the end of Day 1 and reconvened on the morning of Day 2 of the Workshop. Summaries and conclusions of each Breakout Session were then presented to the entire group of Carbon Capture 2020 Workshop participants. Rich Calabrese, of the Office of Fossil Energy and the University of Maryland, College Park, then described efforts to develop a student competition on advanced concepts for CO_2 capture.

Geo Richards and Berend Smit led discussions summarizing the workshop and identifying the next steps in FE and BES collaboration in CO_2 capture. The two-day workshop ended with closing remarks from Brad Tomer and Harriet Kung.

3.0 BREAKOUT SESSIONS

As listed in the workshop announcement, one of the goals of the Carbon Capture 2020 Workshop was to identify areas for collaboration across FE and BES projects. This collaboration is aimed at accelerating developments of the best ideas for carbon capture within various time frames: near-term (by 2020), and long-term (beyond 2020).

The Breakout Session discussions focused on current FE and BES CO_2 capture research initiatives. Discussions of other research ideas were also encouraged. The participants in each Breakout Session identified CO_2 capture concepts and determined the technology readiness level that corresponded to the "technology development ladder" depicted in Figure 1. Additionally, the session participants indicated the technical challenges that must be addressed to raise the technology readiness level (these are the "holes" on the chart), and proposed approaches, including experimentation, modeling, and analyses, to fill the holes.

Figure 1: Technology Development Ladder

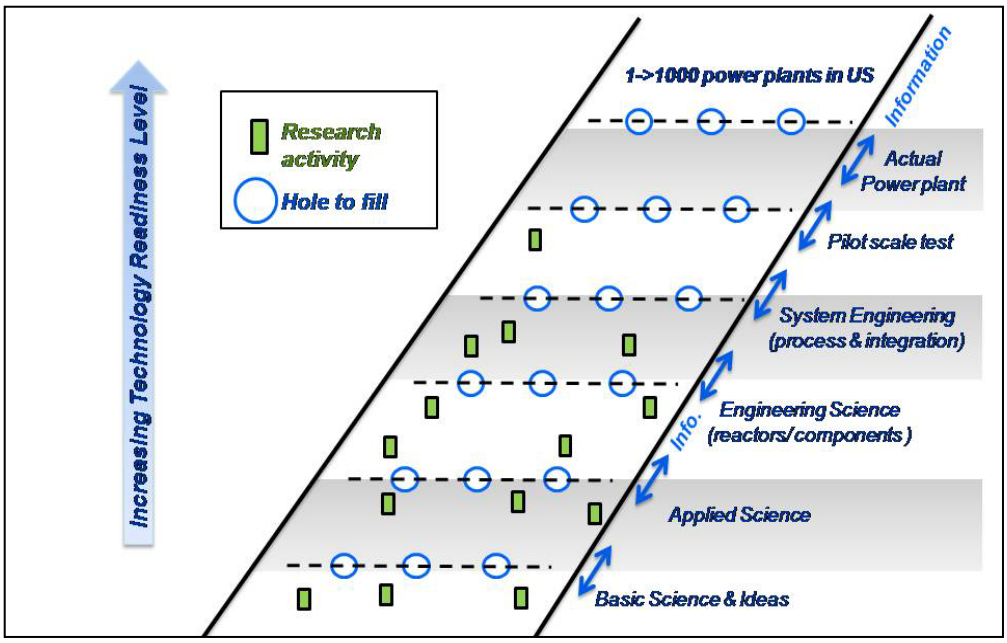

The expected outcome was to foster ideas regarding how to quickly move up and down the ladder. If it turned out that advancing many ideas at the bottom depended on filling a similar hole, it would be clear where to focus efforts. The Breakout Session participants debated exactly what holes need to be filled—in other words, what technical challenges needed to be addressed, and how that might be done. The Breakout Session group spent about 15–30 minutes on a given idea, and then moved on to a new idea. Each session was led by a facilitator to provide focus and record ideas and discussion highlights.

On the morning of Day 2, the Breakout groups reviewed the ideas and looked for common issues that needed to be addressed by research at the various levels. Each Breakout group developed a list of these technical issues, as well as how they might be addressed. The facilitator's notes were used to develop the presentations given later to the entire workshop assembly. Breakout participants were encouraged to identify opportunities to address these issues by simply coordinating work that was already occurring. Each group also identified research activities and

needs, e.g., common research themes that would be germane to CO_2 capture technology development. The common research themes are listed in Section 3.1, and the results of the five Breakout Sessions are summarized in Sections 3.2–3.6. A list of participants for each Breakout Session is given in Appendix D.

3.1 Common Research Themes

The following themes were common to all of the breakout topics:

- Optimization algorithms and methods for complex plants;
- Measurement of gas-host interactions;
- Ability to measure and understand key thermodynamic, chemical, and structural characteristics;
- Discovery of entirely new materials; and
- High performance computing/modeling/simulation to accelerate scale-up.

3.2 Solid Adsorbents/Absorbents

Given the growing global energy demand, with fossil fuels as the primary energy source, the development of energy efficient processes utilizing solid adsorbents/absorbents to capture CO_2 from large stationary point sources serves as a most important and central strategy for achieving significant reductions in atmospheric CO_2 levels. Development and integration of a viable, cost-effective post-combustion capture technology based on solid adsorbent/absorbents, combined with CO_2 long-term storage, may eliminate the need for substantial modifications to the overall combustion process and provide a means for near-term CO_2 capture for both new and existing pulverized coal-fired (PC) power plants. Post-combustion capture technologies with solid adsorbents are possible retrofits to existing PC plants that are integral to modern power plant infrastructure. The advantages and disadvantages of liquid absorption methodologies such as chemical fixation of CO_2 with aqueous solutions of amines, which is often recognized as the most advanced in terms of technology readiness, were briefly discussed.

The group extensively discussed design, synthesis, and characterization of the Basic Science Engineered Solids, (i.e., highly crystalline porous materials such as metal organic frameworks [MOFs] and zeolite imidazolate frameworks [ZIFs] for selectively capturing CO_2). These solids have highly desirable properties such as microporosity, high surface areas, and exceptional thermal and chemical stability, making them ideal for gas separation applications. However, industrial participants stressed to researchers working in this area that those measurements (typically recorded within a controlled laboratory setting) for the most part do not correspond with "real-world" conditions. *Central to the discussion was the prerequisite to clearly identify design and operational conditions within a PC plant.* The group strongly suggested creation of a "living document" containing basic targets and success criteria for development of materials and processes as a means of systematically and quickly developing unique materials for capturing CO_2 from PC power plants. This "living document" would be available to all researchers on the worldwide web. The importance of molecular simulation of MOFs for adsorption applications was also emphasized. Combining information related to MOF properties, such as types of functional groups, surface area, free volume, and heat of adsorption, with detailed analysis of the absorption mechanisms, will provide researchers with the opportunity to develop design principles for MOFs and ZIFs, and tailor these materials for practical applications.

High temperature solid adsorbents, such as metal oxides (CaO, MgO), combinations of CaO/MgO, lithium silicates, and hydrotalcites have been investigated extensively for decades and used to capture CO_2 by chemical adsorption. Future research related to these specific materials identified system and computational analysis, along with Thermophoresis, as being significant for technology readiness.

New mechanisms, other than conventional pressure/temperature swings for releasing CO_2 from solid adsorbents, were briefly highlighted as areas of innovation.

Participants were in agreement that: 1) further development of CO_2 capture technologies needs to include industry-wide communication and collaboration on projects, and 2) formation of a joint Fossil Energy/Basic Energy Science program should be established in the very near future.

The group identified five technology concepts or methodologies in the solid adsorbents/adsorbents technology area. Listed below are the group's assessment of the relative maturity (stage of development), technical barriers, and recommended/necessary R&D to move up the "technology development ladder" toward commercialization/demonstration of these concepts.

3.2.1 New Mechanisms for Releasing CO_2 from Solid Sorbents

- Stage of development
  - Below Basic Science and Ideas
- Technical barriers
  - Immaturity of the technology
  - Evaluation of systems
- Research areas
  - Microwave radiation
  - Electrical
  - Light
  - Mechanical pressure
  - Conversion within a substrate
  - Phase change
  - Kinetics
  - pH changes

3.2.2 Functionalized Solid Substrates

- Stage of development
  - *Basic Science and Ideas*
- Technical barriers
  - Target binding enthalpy of CO_2 and contaminants
  - Thermal stability
  - Limited methods for functionalizing materials
  - Limited methods for measuring gas uptake
- Research areas
  - Diffusivity and gas-host interaction measurements
  - Computational analysis
  - Basic synthetic chemistry
  - Tribological properties

- Measurements of gas-host interaction
- Attrition

3.2.3 Low Temperature Sorbents

- Stage of development
  - *System Engineering*
- Technical barriers
  - Low regeneration energy benefits
  - Attrition—improve solids handling
  - Poor heat integration
  - Waste disposal
- Research areas
  - Full process analysis (water, contaminants, etc.)
  - In-depth development of thermophysical properties
  - Range of target flue gas temperatures
  - Measurements of gas-host interactions

3.2.4 Viability Assessment of Solid Absorbents

- Stage of development
  - Applicable to every stage
- Technical barriers
  - Limited understanding of power plant design and operating conditions
  - Measurements recorded in laboratories not corresponding to actual conditions
  - Uncertainty in cost assessments and cost of producing sorbents due to lack of resource availability
- Research areas
  - Creation of process design equations in terms of laboratory experimentation

3.2.5 Calcium-Based Solid Absorbents

- Stage of development
  - *Pilot-Scale Test*
- Technical barriers
  - Integration into power plants (identifying most efficient process e.g., Fluidized Bed Combustion, Transport Reactor)
  - Poor heat integration
  - Waste disposal
- Research areas
  - Computational analysis
  - Thermophoresis
  - System analysis
  - Measurements of gas-hot interactions

3.3 Liquid Adsorbents, Solvents

Solvent-based CO_2 capture involves chemical or physical sorption of CO_2 from flue gas into a liquid carrier. Solvent-based systems, such as commercially available amine-based systems, are being used today for scrubbing CO_2 from industrial flue gases and process gases. However,

scaling this type of CO_2 capture system to the size required for processing the large volumes of flue gas produced by a PC plant has not been achieved. Research efforts on solvent absorbents must address technical challenges to solvent-based CO_2 capture, such as large flue gas volume, relatively low CO_2 concentration, flue gas contaminants, and high parasitic power demand for solvent recovery.

The Breakout group for Liquid Adsorbents/Solvents began by identifying the ideal characteristics of an absorbent (and adsorbent). The group then discussed solvents currently being tested at pilot scale, including Alstom's Chilled Ammonia, MHI and Fluor solvents, and Powerspan's ECO_2 technology.

Ideal Characteristics of an Absorbent (and Adsorbent):

- 100% selectivity to CO_2
- Low heat capacity
- Non-toxic
- Fast kinetics
- Fast mass transfer
- Low viscosity
- Low volatility
- Thermal stability
- Chemical Stability
- Inexpensive or free

Building on this, they identified seven technology ideas. The group's assessment of the relative maturity (Stage of Development) and Technical Barriers is shown below. The final section (3.3.8) is the group's cross-cutting recommended/necessary R&D to advance the technology and move it toward commercialization/demonstration.

3.3.1 Amine Based Systems

- Stage of development
  - *Pilot-Scale Test*
- Technical barriers
  - Theoretical cost of electricity (COE) for the system (DOE goal is less than 35 percent increase in COE by 2020)
  - Reliability of pilot-scale data
  - Chemical stability of amines (oxidation)
  - Balance of plant impacts
  - Toxic by-products (and environmental fate)
  - Contactor design at full scale
  - Corrosivity

3.3.2 Ammonia Based Systems

- Stage of development
  - *Pilot-Scale Test*
- Technical barriers
  - Parasitic load
    - Scale-up

- Vapor liquid equilibrium (VLE) at operating conditions
    - Modeling and actual plant data
- Balance of plant impacts, and capture systems
- Integration of waste heat into power plants
- Potential problems with slurries in chilled systems

3.3.3 Silicon Based Systems

- Stage of development
    - *Applied Science*
- Technical barriers
    - Incorporation of viscosity, chemical stability, corrosion, and kinetics characteristics in designing engineering components
    - Contaminants, conductor design (created continuous systems at demonstration scale to have real flue gas test)
    - Impact of large-scale Si usage
    - Integration of system with power plant

3.3.4 Chemically Tailored Ionic Liquids

- Stage of development
    - *Applied Science*
- Technical barriers
    - Difficulty in obtaining high quality measurements under process conditions—especially viscosity, thermal stability, and mass transfer
    - Structure property relationships
        - Chemistry
        - Experimental and simulation challenge
        - Limited selectivity
    - Analytical models of isotherms
        - Characterization of VLE for ionic liquids
    - Synthesis of materials (inexpensive)
    - Chemical stability
    - Toxicity and environmental fate

3.3.5 Binding Organic Liquids

- Stage of development
    - *Applied Science*
- Technical barriers
    - Lack of multi-variant optimization. Consider viscosity, interaction with water.
        - Cost
    - Integration with engineering components (reactor design)
    - Many overlapping issues with Silicon Based Systems and Ionic Liquids

3.3.6 Catalysts for Buffered Aqueous Systems

- Stage of development
    - *Engineering Science*
- Technical barriers

- Identification of catalytic materials with favorable characteristics
- Matching appropriate catalysts to solvent
- Understanding thermal and chemical stability
- Understanding limiting equilibrium, and determining how to catalyze
- Inability to immobilize (localize) without sacrificing activity

3.3.7 Command and Electrochemical Sorption

- Stage of development
  - *Basic Science*
- Technical barriers
  - Lack of understanding of material science in triggering adsorption/desorption of CO_2
  - Identification of required material properties
    - Energy to desorb CO_2 with no other thermal or physical energy required
    - High mass density to absorb CO_2
  - Selectivity, stability, toxicity, and other thermo/physical characteristics
  - Integration with plant: electric work instead of steam
  - Scalability, reactor design

3.3.8 Cross-cutting Themes

- Measurement and understanding of key thermodynamic, chemical, structural characteristics
- Identification of what is limiting equilibrium, and how to catalyze
- Integration with continuous system at demonstration scale (contaminants, corrosion, reactor design)
- Material cost and impact (lifecycle) for scale-up
- Impact on scale-up (degradation)
- Impacts on balance of plant and capture system
- Optimization algorithms and methods for complex plants

3.4 Membrane Concepts

The primary focus of discussion in the Membrane Breakout Session centered on advances in applied membrane research instead of specific technologies currently being developed and .the inability of those technologies to meet CO_2 capture goals. Most currently funded membrane projects focus on materials development. A class of materials is proposed, development of a series of performance goals begins, and systems analysis subsequently determines whether the goals are logical. A more rational approach would involve setting performance goals and challenging material scientists, both basic and applied, to help achieve them.

Further discussion revealed that setting clear performance goals is made more complex by uncertainty about membrane process design for flue gas capture. Simple, end-of-stack application of a membrane to these systems will result in the failure to meet capture goals, regardless of the quality of the membrane material. Membranes are, however, a class of devices which lend themselves well to systems integration. One such system integration design has already been proposed by Membrane Technology Research. It is unclear whether any significant effort is under way, either to encourage the development of other such designs or to complete thorough systems analysis which would define the required membrane material performance for each design. If such work were performed, applied materials scientists would have much greater opportunity to use their skills to produce relevant technologies, and basic scientists would gain

an understanding of what critical phenomena must be better understood in order to enable progress.

Additional issues that will require research before membranes are applied to flue gas systems include a variety of engineering concerns such as module development. Available membrane module configurations will need to be adapted to mild conditions, and their expense and pressure drop will need to be moderated. These are critical future concerns, but at the current membrane development stage, the system design issues discussed above are of higher importance.

Two membrane designs already under development were also discussed: the NETL-supported ionic liquid membrane, and the Research Triangle Institute fluorinated polymer membrane. While the concerns discussed above apply to these technologies, both are improving performance, and both have promise in flue gas systems. Below is the Membrane Concepts Breakout group's assessment of technical barriers of known membranes (Section 3.4.1), followed by the group's assessment of the relative maturity (Stage of Development) and the Technical Barriers.

3.4.1 Known Membranes

- Technical barriers
  - Incorrect research paradigm; at the highest level, current thinking is based on available membrane materials and what can be done with them. Not the best way, because it is constrained by the materials that are available; it prevents "outside the box" thinking
    - Works, but does not lead to the most beneficial end state
    - Desirable way to work in the short term (~5 years)
    - Potential solution: better approach would be to get the process engineers in the room, come up with an alternative system design that is not constrained by existing materials, requiring new materials instead
  - Lack of a common measurement for ranking or identifying how far new materials are from optimum
    - Process, specifications, and materials

3.4.2 Supported Ionic Liquids (applies to most materials)

- Stage of Development
  - Not determined
- Technical barriers
  - Optimizing ionic liquids for flue gas conditions
    - Lack of basic science to enable the selection of the best ionic liquid
  - Turning ionic liquid into a practical membrane (applied science)
    - Solving this will move ionic liquids to the same level as the flourinated-based polymers
  - Lack of testing approaches for high throughput mixed gas
  - Slow synthesis techniques

3.4.3 Develop Fluorinated-Based Polymer with Higher Permeability and Selectivity

- Stage of Development
  - Below *Basic Science and Ideas*
- Technical barriers
  - Optimization:

- Need to increase permeability without losing integrity
  - Chemistry has high crystallinity, creating diffusion issues
- Need to raise selectivity to 30:50 CO_2/N_2
  - Raising permeability decreases selectivity
- Need for high throughput testing
  - Lack techniques; multiple steps; takes time to achieve steady state; first step and last step take the longest; expensive and not widely available

3.5 Chemical and Biological Analogues

The Chemical and Biological Analogues breakout group first discussed what types of technologies it should consider. It was important to assure that all participants came in with the same basis for determining the areas of research. While the biological portion of the working group seemed clear to most of the group, the chemical part was ultimately determined to be any chemical process that was not currently under study in the other working groups. The overall sense of the group was that the arena of Chemical and Biological Analogues was quite large, and therefore had numerous possibilities for basic research.

One of the key issues that clearly needed to be addressed by the basic science community was the CO_2 capture operational environment. When dealing with the almost limitless options with biologically based systems and compounds, researchers need a clear understanding of the operational environment in order to direct or confine their search to the proper areas.

The major activities identified for basic research were the development, characterization, and prediction of new materials and their physical properties. Many of the participants highlighted the equipment available at the various national laboratories that would be capable of providing physical property measurements for computational and atomistic modeling, along with macro scale process simulation. The ideas generated by the group not only included the areas currently under research by the group members, but also areas of innovation that had not been fully explored.

The Chemical and Biological Analogues breakout group identified six technology ideas (listed below) followed by the group's assessment of the relative maturity (Stage of Development) and Technical Barriers. The final section (3.5.7) gives the group's list of common themes.

3.5.1 Amino Acids and Peptide Salts for CO_2 Removal

- Stage of development
  - *Applied Science*
- Technical barriers
  - Inability to bio-manufacture on the necessary scale
  - Lack of data on scaling parameters: durability, yield, capacity, etc.
  - Adsorption and regeneration design
  - Lack of performance data
  - Instability of peptides at certain temperatures

3.5.2 Carbonic Anhydrase Memetics

- Stage of development
  - *Basic Science*
- Technical barriers

- Variable nature of flue gas
- Lack of scale-up parameters
- System compatibility
- Lack of knowledge of physical behavior for many materials
- Lack of model or screen to predict catalytic activity
- Flue gas poisoning

3.5.3 Algae for CO_2 Capture

- Stage of development
  - *Pilot-Scale Test*
- Technical barriers
  - Lack of combustion operating experience with biomass
  - Nutrient integration
  - Toxicology and purification questions
  - Photo-inhibition and carbon capacity

3.5.4 Develop a Biological Analogue for the Production of Oxygen on a Large Scale for Oxy-combustion

- Stage of development
  - *Basic Science & Ideas*
- Technical barriers
  - Lack of suitable material

3.5.5 Process Steam Conversion of Flyash to Carbonation Materials

- Stage of development
  - *Basic Science & Ideas*
- Technical barriers
  - Lack of lifecycle assessment of the process
  - Minimizing system downtime
  - Lack of understanding concerning the impact of the power plant lifecycle on dynamics
  - Lack of understanding of fluid dynamics in a reactor environment
  - Insufficient understanding of key variables

3.5.6 Develop Bio-Inspired Synthetic Catalysts to Capture CO_2

- Stage of development
  - *Basic Science & Ideas*
- Technical barriers
  - Lack of suitable material

3.5.7 Common Themes

- Ideas for the Basic Science stage
  - Common tools requirement
- Benefits of predictive modeling
  - Discovery of entirely new materials
- Important processes occurring at interfaces
- Communities which are not traditionally involved with energy

- Difficulties in scaling up
- Intellectual property

3.6 Cross-cutting Ideas

The Cross-cutting Breakout group was tasked with addressing technology that did not rely on a single scientific advance, such as new chemistry to absorb CO_2. Instead, cross-cutting ideas might rely on combining concepts at the system level, and integrating them in a manner that provides an advantage for CO_2 capture compared to existing approaches. For example, oxy-fuel combustion combines advances in oxygen separation with a complete system to achieve CO_2 capture.

The Cross-cutting Breakout group identified eight technology components or technical topics that could be integral to advanced CO_2 capture. The group's assessments of the relative maturity (Stage of Development) and Technical Barriers and/or recommended/necessary R&D to advance the technology and move it toward commercialization/demonstrations are listed in Sections 3.6.1–3.6.8. The Cross-cutting group also described research activities needed to move up or down the "technology development ladder."

During the discussion, the role of computational models to assess the performance of new ideas was considered in two different ways, as summarized in sections 3.6.3 and 3.6.7 below. One suggestion to improve existing modeling approaches was to emphasize bridging the scales of various models, with model validation (from experiments) integrated across all the model scales. Another suggestion was to evaluate how to better utilize existing computational tools as well as determine the gaps in computational capability from the user perspective. The group noted that most models are not designed to address practical problems such as material degradation or particle attrition, yet these are important considerations in evaluating the success of proposed concepts. For both model and experimental studies, the group noted that the effect of trace impurities is often neglected when fundamental studies are conducted. While this simplification is often necessary to make progress, trace impurities remain a stubborn challenge to coal power system development. Any new techniques to separate CO_2 must consider trace flue gas components, starting with sulfur and NO_x but also including trace metals. Additional studies on trace species chemistry and characterization, to occur in parallel with CO_2 capture, were suggested.

3.6.1 Oxy-Fuels

- Stage of development
  - *Pilot-Scale Test*
- Technical barriers
  - Moving up
    - Corrosion on fire side; new materials
    - Air in-leakage of contaminants (e.g., N_2 and argon) and how to remove cost effectively
    - Boiler design
    - Lack of understanding regarding complexity ("plumbing problems" and process optimization)
      - Reliability, sizing, transients
      - Approach: 1) learn from existing demonstrations; 2) dynamic simulation development and validation; 3) learn from risk/availability assessments

- In between
    - Radiation model with validation (Is it significant?)
- Moving down
    - Reduction of capital and operating costs in oxygen separation (Reduce costs beyond today's current advancements)
    - Basic separations research
    - Boiler design fundamental understanding
    - Materials of construction
    - Particle reactions under oxy-fuel conditions

3.6.2 Chemical Looping

- Stage of development
    - *Pilot to Engineering Science*
- Technical barriers
    - Moving up
        - Lifecycle and environmental impact of oxidants
        - Implementation of retrofits
        - Transport/solids management
        - Heat management/new reactor concepts
        - Sensor & controls (pilots)
        - Sorbent reclamation and ash management
    - Moving down
        - Lack of approaches for dealing with contaminants
        - Lack of mechanism for reactions between two solid materials
        - Non-durability of oxidants
        - Balancing thermodynamics
            - New processes
            - Fundamental physics of particles
            - New chemistry materials (e.g., nanostructured materials)
            - New compositions
            - New construction materials (to combat erosion)

3.6.3 Computation and Characterization (Multi-Scale Physics)

- Stage of development
    - Across all stages of development
- Technical barriers
    - Lack of particle scale information needed as inputs to macro-scale models
    - Lack of understanding of controlling mechanisms for capture (e.g., diffusion or adsorption rate for the case of solid adsorbents)
    - Lack of information from bench work to do economic analysis
    - Lack of clarity regarding scale-bridging models/reduced-order models
    - Inadequate numerical methods
    - Model validation across spectrum of scales (particle, bench, pilot, commercial)
    - Uncertainty quantification (e.g., inputs, boundary, external validation, data, etc.)
    - Lack of virtual models (to help minimize "plumbing problems")
    - Poor data for and understanding of speciation and fate of trace elements

- Inadequate modeling of weak interactions for materials discovery

3.6.4 CO_2 Compression

- Stage of development
  - *System Engineering* (across multiple technologies)
- Technical barriers
  - Moving up
    - Lack of systems study to reconcile commercial equipment supply with theoretical specifications
    - Understanding different compression needs as a function of technical approach to capture (i.e., membranes, absorbents, etc.)
    - Inadequate understanding of issues with scaling up GPUs
    - Lack of pilot plant data for gas composition and contaminants
    - Lack of pilot plant data for condensate (water) composition
  - Moving down
    - Inadequate understanding of CO_2 physical properties in presence of contaminants (i.e., water and acid gas), and also of solubility in brine
    - Lack of transport models to understand pressure specifications for output CO_2
    - Materials corrosion/compatibility issues

3.6.5 Alternatives to Sequestration (CO_2 as Feedstock)

- Stage of development
  - *Basic Science and Ideas*
- Technical barriers
  - Lack of options (scientific inquiry into options)
  - Lack of methods to independently tune thermodynamics and kinetics of any CO_2 reaction
  - Inadequate knowledge of chemistry that is separate from acid-based chemistry
  - Lack of biological approaches
  - Process chemistry understanding should be commensurate with the problem
    - Mineralization, building materials, fuel, chemicals*

      ***** Higher-value chemicals may be pathways to innovation, but they are not the solution

3.6.6 Speciation and Fate of Trace Elements

- Stage of development
  - Across all stages of development
- Technical barriers
  - Modeling
  - Mechanisms
  - Experimental measurements
  - Sensing and detection
  - Quantification of environmental impact
  - Impact on carbon capture

3.6.7 Scale-up and Technology Development

- Stage of development

    - Across all stages of development
- Technical barriers
    - Scale-up (use of high-performance computing/modeling/simulation to accelerate scale-up
    - Lack of algorithms
    - Inadequate integration of tools
    - Lack of computer access, lack of funding
    - Inadequate data and models (use computations to develop better models and necessary data)
    - Gaps in capabilities from the user's perspective?
    - Lack of models for scale-up
      Note: Perhaps more of an FE pull than a BES push

3.6.8 Alternative Regeneration Schemes

- Stage of development
    - Across lower half of stages of development
- Technical barriers
    - Inefficiency of temperature/pressure swing (develop better CO_2 release processes)
        - Chemical reactions (reduction)
        - Electrolytic stripping
        - Mineralization
        - Phase change
    - Lack of standard comparison of energy consumption and cost

RECOMMENDATIONS/NEXT STEPS

Many of the participants were not familiar with power plant flue gas flows, constituents, or conditions (temperature, pressure, humidity, etc.), which must be considered when developing membranes, solvents, adsorbents, or other CO_2 capture mediums. An overview of the conditions and operations for conventional pulverized coal-fired power plants that will be useful to CO_2 capture technology researchers is provided in Appendix E. The participants also recommended creating a living document with basic targets and success criteria for CO_2 capture materials and processes.

The next steps are: 1) post all the introductory and Breakout Session presentations, agenda, list of participants, and other relevant materials from the Carbon Capture 2020 Workshop on the NETL Web site; 2) hold another workshop, to be sponsored by BES, in early 2010 to identify additional innovative approaches to capturing CO_2; and 3) develop a carbon capture technology roadmap for a coordinated effort between FE and BES that will accelerate development of CO_2 capture technologies by 2020 and advance the most promising emerging technologies for longer term deployment.

Appendix A:
Carbon Capture 2020 Workshop Agenda

Carbon Capture 2020 Workshop

October 5-6, 2009

AGENDA

MONDAY, OCTOBER 5, 2009 - CHESAPEAKE BALLROOM

7:00 a.m. **Registration/Continental Breakfast - CHESAPEAKE FOYER**

CHESAPEAKE BALLROOM

8:00 a.m. **Introductions** – *Brad Tomer*, National Energy Technology Laboratory, U.S. Department of Energy
Harriet Kung, Office of Basic Energy Sciences, U.S. Department of Energy

8:10 a.m. **Opening Comments and Overview Presentations on Ongoing FE and BES Carbon Capture Research**
Dr. James J. Markowsky
Assistant Secretary, Office Fossil Energy, U.S. Department of Energy
Dr. William F. Brinkman
Director, Office of Science, U.S. Department of Energy

8:40 a.m. **FE Program for Carbon Capture**
Jared Ciferno
National Energy Technology Laboratory
U.S. Department of Energy
NETL research activities
Geo Richards
National Energy Technology Laboratory
U.S. Department of Energy

9:10 a.m. **BES Research on Carbon Capture** – *Mary Galvin*, Office of Basic Energy Sciences, U.S. Department of Energy
Overview of EFRC – *Berend Smit*, University of California, Berkeley

9:40 a.m. **BREAK - CHESAPEAKE FOYER**

10:00 a.m. **Overview of Powerplant Configuration, Flue Gas Conditions, Heat Flows, Scale of Operation**
John Marano, JM Energy Consulting, Inc.

10:45 a.m. **Oxy-Fuel Combustion Status** – *Brad Adams*, Reaction Engineering International

11:10 a.m. **Description of Models for Scale-up of Carbon Capture Technologies** – *Madhav Symlal*, National Energy Technology Laboratory, U.S. Department of Energy

3:00 p.m. **Breakout sessions**
We divide into as many as five groups, described below:
- *Solid adsorbents/absorbents; Room 1101-1st Floor*
- *Liquid adsorbents, solvents; Room 1109/1111-1st Floor*
- *Membrane concepts; Room 2117 - 2nd Floor*
- *Chemical and Biological analogues; Room 2129 - 2nd Floor*
- *Cross cutting ideas; Room 0101 - Lower Level*

THE FORMAT FOR THE BREAKOUT IS DEFINED IN ATTACHED DOCUMENTS

TUESDAY, OCTOBER 6, 2009 - CHESAPEAKE BALLROOM

7:00 a.m. **Registration/Continental Breakfast - CHESAPEAKE FOYER**

8:00 a.m. **Finish Breakout sessions**

CHESAPEAKE BALLROOM

9:30 a.m. **Reports from Breakout Sessions and Discussions** – *Facilitators*

11:00 a.m. **Discussion of Developing a Student Competition**
Richard Calabrese, Office of Fossil Energy, U.S. Department of Energy and University of Maryland, College Park

11:15 a.m. **Summary Discussions and Next Steps**
Geo Richards, National Energy Technology Laboratory
U.S. Department of Energy
Berend Smit, University of California, Berkeley

11:45 a.m. **Wrap-Up**
Brad Tomer, National Energy Technology Laboratory, U.S. Department of Energy
Harriet Kung, Office of Basic Energy Sciences, U.S. Department of Energy

WORKSHOP GOALS

1. COMMUNICATE STATUS SO THAT THE RESEARCH COMMUNITY UNDERSTANDS:
   - THE SCALE AND NATURE OF THE PROBLEM THAT NEEDS TO BE ADDRESSED
   - WHAT PARAMETERS NEED TO BE DEFINED FOR RESEARCH ACTIVITIES
   - THE POTENTIAL OF NEW IDEAS EMERGING FROM BASIC RESEARCH
   - THE STATUS OF EXISTING FOSSIL ENERGY CAPTURE RESEARCH

2. PRODUCE A ROADMAP FOR A COORDINATED EFFORT THAT WILL IMPACT CARBON CAPTURE BY 2020
   - IDENTIFY ONGOING RESEARCH PROJECTS THAT COULD BE CONNECTED TO APPLIED RESEARCH GOALS
   - PROPOSE AND CRITIQUE A NUMERIC MODELING APPROACH TO QUICKLY ASSESS THE FULL-SCALE PERFORMANCE OF NEW CONCEPTS

Appendix B:
Carbon Capture 2020 Workshop Attendees

The following individuals attended the workshop:

Brad Adams, Reaction Engineering International

Roger Aines, Lawrence Livermore National Laboratory

Herbert Andrus, Jr., Alstom Power, Inc.

Matt Antes, Energetics Incorporated

Abhoyjit Bhown, Electric Power Research Institute

Patrick Brady, Sandia National Laboratories

Lynn Brickett, U.S. Department of Energy

William Brinkman, U.S. Department of Energy

Emilio Bunel, Argonne National Laboratory

Richard Calabrese, U.S. Department of Energy and University of Maryland

Yves Chabal, University of Texas at Dallas

Shiaoguo (Scott) Chen, Science Applications International Corp.

Steven Chuang, The University of Akron

Jared Ciferno, U.S. Department of Energy

David Cole, Oak Ridge National Laboratory

Regis Conrad, U.S. Department of Energy

Anthony Cugini, U.S. Department of Energy

Don DePaolo, Lawrence Berkeley National Laboratory

Richard Doctor, Argonne National Laboratory

James Dooley, Joint Global Change Research Inst.

Yuhua Duan, Parsons

Daniel Fauth, U.S. Department of Energy

Jose Figueroa, U.S. Department of Energy

Timothy Fout, U.S. Department of Energy

Benny Freeman, University of Texas at Austin

Mary Galvin, Basic Energy Sciences

Bruce Garrett, Pacific Northwest National Laboratory

Fred Glaser, U.S. Department of Energy

Avi Gopstein, U.S. Department of Energy

Teresa Grocela Rocha, GE Global Research

Mark Hartney, U.S. Department of Energy

David Hopkinson, U.S. Department of Energy

Mallory James, Energetics Incorporated

Michael Janicke, Los Alamos National Laboratory

Katie Jereza, Energetics Incorporated

Mauricio Justiniano, Energetics Incorporated

Ken Kiger, University of Maryland

John Kitchin, Carnegie Mellon University

Walter Kozumbo, Air Force Office of Scientific Research

Holly Krutka, ADA – Environmental Solutions

Harriet Kung, U.S. Department of Energy

Karl Lang, National Interest Security Corp.

Bingyun Li, West Virginia University

Scotte Litzelman, Booz Allen Hamilton

Jeffrey Long, University of California, Berkeley

Yongqi Lu, University of Illinois

David Luebke, U.S. Department of Energy

John Manning, Energetics Incorporated

John Marano, JM Energy Consulting, Inc.

James Markowsky, U.S. Department of Energy

B. Peter McGrail, Pacific Northwest National Laboratory

Stewart Mehlman, Praxair, Inc.

David Miller, U.S. Department of Energy

John Miller, U.S. Department of Energy

Matt Munderville, Energetics Incorporated

George Muntean, Pacific Northwest National Laboratory

Thomas Nelson, Research Triangle Inst. International

Vidvuds Ozolins, University of California, Los Angeles

Mark Pederson, U.S. Department of Energy

Charles Pruss, Technology & Management Services, Inc.

Amir Riaz, University of Maryland

George Richards, U.S. Department of Energy

Carlos Romero, Lehigh University

Karma Sawyer, University of California, Berkeley

Charles Schmidt, Technology & Management Services, Inc.

Jordan Schmidt, University of Wisconsin - Madison

William Schneider, University of Notre Dame

Jason Simmons, National Institute of Standards & Technology

Marvin Singer, U.S. Department of Energy

Sharon Sjostrm, ADA Environmental Solutions

Berend Smit, University of California, Berkeley

Chad Staiger, Sandia National Laboratories

Robert Statnick, Ohio State University

Ed Stephens, Tennessee Valley Authority

Madhava Syamlal, U.S. Department of Energy

Samuel Tam, U.S. Department of Energy

Brad Tomer, U.S. Department of Energy

Lora Toy, RTI International

William Tumas, Los Alamos National Laboratory

Michael Ursic, Technology & Management Service

John Vetrano, U.S. Department of Energy

Chunsheng Wang, University of Maryland

Emily Wheeler, U.S. Department of Energy

James Wishart, Brookhaven National Laboratory

Joseph Wong, U.S. Department of Energy

Taner Yildirim, National Institute of Standards & Technology

Appendix C:
Carbon Capture 2020 Workshop Presenters and Posters

Yves Chabal – University of Texas at Dallas
Carbon Capture in Nanoporous Materials

Steven S.C. Chuang – The University of Akron
Metal Monolithic Amine Grafted Sorbents for CO_2 Capture

Teresa Grocela Rocha – GE Global Research
Novel High Capacity Solvents for Low Cost CO_2 Capture

Geo Richards – National Energy Technology Laboratory

Thomas Nelson – RTI International
CO_2 Capture R&D at RTI International

Chad Staiger – Sandia National Laboratory
Atmospheric Carbon Capture for Reuse & Recycle

Jordan Schmidt – University of Wisconsin, Madison
Modeling CO_2 Capture and Separation on Zeolitic Imidazolate Frameworks

David Luebke – National Energy Technology Laboratory
Supported Ionic Liquid Membranes for Flue Gas CO_2 Capture

Lora Toy – RTI International
CO_2 Capture Membrane Process for Power Plant Flue Gas

Brad Adams – Reaction Engineering International
Charactering Oxycombustion Transports on Coal-Fired Boilers

William Schneider – University of Notre Dame
Novel Ionic Liquids for CO_2 Capture: Computational Design to Laboratory

Holly Krutka – ADA Environmental Solutions
Solid Sorbents a Viable Option for Post-Combustion CO_2 Capture

Yongqi Lu – University of Illinois at Urbana – Champaign
A Novel Carbonate Slurry/Solution-Based CO_2 Absorption Process for Minimizing Regeneration Energy and Compression Work

Jeffrey Long – University of California – Berkeley
Carbon Dioxide Capture in Metal-Organic Frameworks

Bruce Garrett – Pacific Northwest National Laboratory
Computational Studies of Energetics and Dynamic Relevant to CO_2 Sequestration and Capture

Richard Doctor – Argonne National Laboratory
Carbon Capture 2020: Energy, Earth, and Human Systems Modeling for an Oxyfuels Transition Strategy

Roger Aines – Lawrence Livermore National Laboratory
Small Moleude Synthetic Catalysts for Carbon Dioxide Hydration

Yuhua Duan – National Energy Technology Laboratory
Theoretical Screening of Solid Materials for CO_2 Capture

John Kitchin – CMU
Evaluating the Reaction Barrier of Amine Based Sorbents through Experimental Plug Flow Reactor Measurements

Daniel Fauth – National Energy Technology Laboratory
NETL Amine-Based Solid Sorbents for Post-Combustion Capture

Bingyun Li – West Virginia University
Amino Acid Peptide Salts for CO_2 Removal

Amir Riaz – University of Maryland, College Park
Numerical Simulation of Sequestration in Saline Aquifers

Benny Freeman – University of Texas at Austin
Advanced Polymeric Members for Carbon Capture

R.M. Statnick – Ohio State University

Jason Simmons – National Institute of Standards & Technology
Carbon Capture in Metal-Organic Frameworks

Appendix D:
List of Participants for Each Breakout Session

Solid Adsorbents/Absorbents Room 1101 – First Floor	Bunel, Emilio E.
	Chabal, Yves
	Chen, Shiaoguo (Scott)
	Chuang, Steven
	Fauth, Daniel J.
	Janicke, Michael
	Kitchin, John
	Kortan, Refik
	Krutka, Holly
	Long, Jeff
	Nelson, Thomas
	Ozolins, Vidvuds
	Romero, Carlos E.
	Schmidt, Jordan
	Sjostrom, Sharon
	Yildirim, Taner
Liquid Adsorbents, Solvents Room 1109/1111 – First Floor	Adams, Brad R.
	Aines, Roger
	Bhown, Abhoyjit
	Bricket, Lynn
	Grocela-Rocha, Teresa
	Kiger, Ken
	Lu, Yongqi
	Mehlman, Stewart K.
	Schneider, William
	Wishart, James
Membrane Concepts Room 2117 – Second Floor	Figueroa, Jose
	Freeman, Benny
	Luebke, Dave
	Marano, John J.
	Simmons, Jason
	Smit, Berend
	Staiger, Chad
	Toy, Lora
	Vetrano, John
	Wang, Chunsheng

Chemical & Biological Analogues Room 2129 – Second Floor	Cole, David
	Duan, Yuhua
	Fout, Timothy
	Glaser, Fred
	Hartney, Mark
	Hopkinson, David
	Kozumbo, Walter
	Li, Bingyun
	Statnick, Robert M.
	Tumas, William
	Wong, Joseph D.
Cross-cutting Ideas Room 0101 – Lower Level	Andrus, Herb
	Calabrese, Richard
	Conrad, Regis
	DePaolo, Donald
	Doctor, Richard
	Dooley, James J.
	Garrett, Bruce
	Gopstein, Avi
	Litzelman, Scott
	Miller David
	Miller, John C.
	Muntean, George
	Riaz, Amir
	Richards, Geo
	Sawyer, Karma
	Singer, Marvin
	Syamlal, Madhava
	Wheeler, Emily

Appendix E:
Description of Pulverized Coal Power Plant Conditions for CO_2 Capture Process Researchers

Brief Description of Pulverized Coal Power Plant Conditions for CO_2 Capture Process Researchers

Introduction

In order to curb the emissions of greenhouse gases to the atmosphere while maintaining power production levels, it is clear that CO_2 emissions from coal-fired power plants will require some level of capture and storage. Current technology for CO_2 capture has a large energy requirement that would result in a significant increase in the cost of electricity (COE) produced by power plants. Current analysis suggests that COE may increase by approximately 80 percent when compared to a coal-fired power plant without CO_2 capture and storage.[1] The goal of the U.S. Department of Energy is to achieve greater than 90 percent CO_2 capture, while operating at less than a 35 percent increase in COE. To achieve this, it will be necessary to incorporate ideas from traditional and non-traditional industrial chemical processes.

The purpose of this brief is to provide an overview of the conditions and operations of coal-fired power plants that will be useful to CO_2 capture technology researchers who have not previously worked in the area of coal-fired power plants. The information is intended to provide general guidelines and focus for research concepts. In practice, the conditions and operation will vary between power plant sites.

Pulverized Coal-Fired Power Plants

Figure 1 illustrates a block flow diagram of a typical coal-fired power plant configuration. Coal is burned with air in a pulverized coal (PC) boiler. The boiler is lined with heat transfer tubes that are used to produce steam for the plant power cycle. Multiple sections of heat transfer areas are utilized to maximize the amount of heat transferred to the steam. At or near the end of the heat transfer area, selective catalytic reduction (SCR) units utilize a catalyst and ammonia injection to reduce the amount of NO_x formed in the flue gas. These units can remove over 90 percent of the NO_x present in the flue gas, depending upon the amount of ammonia injection. The flue gases are also used to pre-heat the combustion air to further increase overall power plant efficiency. Next, an electrostatic precipitator (ESP) is utilized to remove particulate matter (PM) from the flue gas. ESPs typically remove 99+ percent of the particulate in the gas. An induced draft fan then pushes the flue gas through the last pollution control system, the flue gas desulfurization (FGD) unit. FGD systems use lime or limestone to capture SO_x present in the flue gas. The flue gas is then sent to the stack, if carbon capture is not employed.

The typical flue gas volume for a coal-fired power plant is 3,500 to 4,500 acfm at 325 ^{o}F per megawatt net power produced. All of the process units typically operate slightly above or below atmospheric pressure. This is important, because there will be little pressure driving force available for separating CO_2 from the other flue gas constituents. Table 1 contains typical flue gas conditions and compositions for the four points in the pollution control train indicated on Figure 1.

[1] Cost and Performance Baseline for Fossil Energy Plants, Vol. 1 Bituminous Coal and Natural Gas to Electricity, U.S. Department of Energy/National Energy Technology Laboratory, Revision 1 Final Report, August 2007, DOE/NETL-2007/1281

Figure 1. Block flow diagram for a typical bituminous coal-fired power plant.

PC = Pulverized Coal; SCR = Selective Catalytic Reduction unit; ESP = Electrostatic Precipitator; FGD = Flue Gas Desulfurization unit

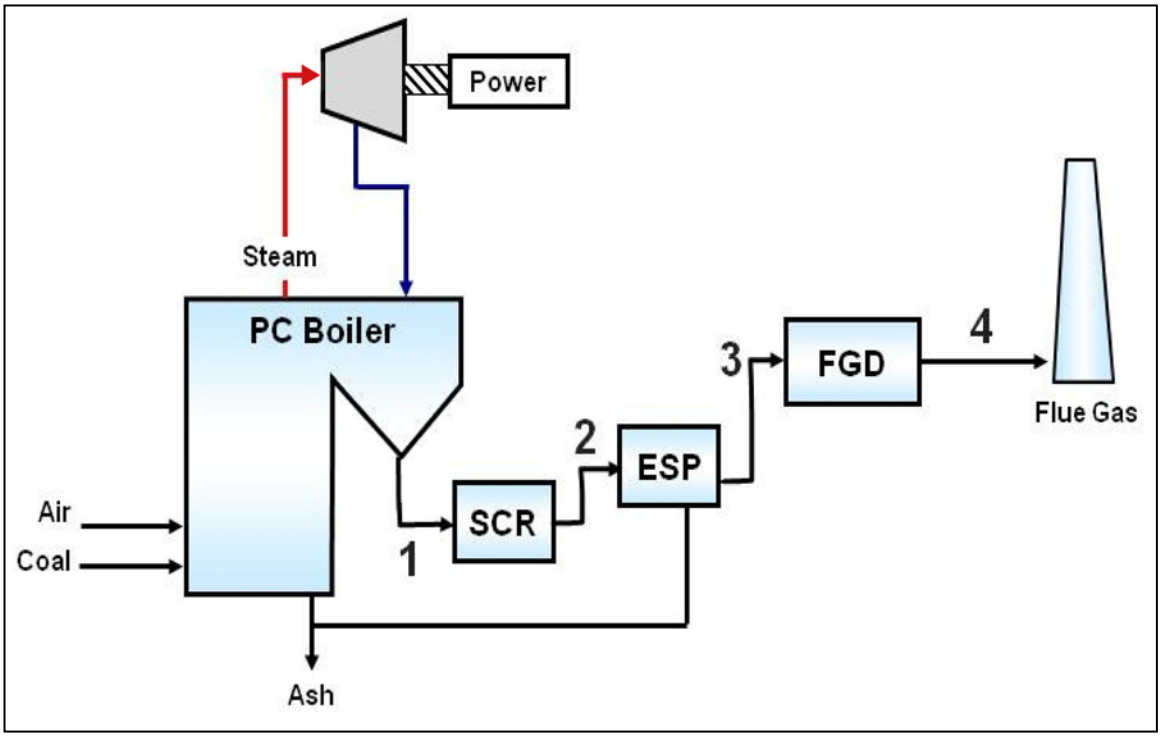

Sub-bituminous and Lignite Coal

In some cases, there may be differences in the pollution control train for systems that fire sub-bituminous and lignite coals. Because these coals have lower sulfur, a spray dryer absorber (SDA) can be used for sulfur control, instead of a wet FGD unit. SDA units utilize a lime slurry spray that reacts with SO_2 in the flue gas to produce a dry reaction product. This reaction product is removed, along with particulate matter in the baghouse unit. A baghouse utilizes a fabric filter to trap solid particles. The particles are removed using a pulse of compressed air. This baghouse would replace the ESP shown in Figure 2 and would be installed after the SDA. Nearly 44 percent of the coal used at U.S. power plants is sub-bituminous. High- and low-sulfur bituminous coal accounts for 48 percent of the coal used at U.S. power plants, with the remainder being lignite.[2] The relatively high usage of sub-bituminous coal is due to its low-sulfur content and utility for Clean Air Act compliance.

Conclusion

Depending upon the coal type and point of operation in the power plant pollution control train, conditions and composition of the flue gas can vary greatly. When examining various options for the capture of CO_2 from a coal-fired power plant, it is important to keep these conditions in mind. While the composition and condition of the flue gas can be changed to meet the requirements of any pollution control system, these ancillary processes will add cost and most

[2] Electric Power Annual 2007, Released 1/29/2009, Energy Information Administration, U.S. Department of Energy

likely reduce overall power plant efficiency. These cost and efficiency impacts need to be considered in determining the costs of CO_2 capture systems.

More detailed information about coal-fired power plant configurations can be found at NETL's energy analysis Web site: http://www.netl.doe.gov/energy-analyses/index.html

For more information about NETL's CO_2 Capture research through the Existing Plants Program, please visit: http://www.netl.doe.gov/technologies/coalpower/ewr/co2/index.html

Table 1. Representative flue gas conditions for the pulverized coal-fired power plant configuration shown in Figure 2.

Coal Type	Stream No.	CO_2 vol %	H_2O vol %	N_2 vol %	O_2 vol %	SO_2 ppm_v	SO_3 ppm_v	NO_x ppm_v	PM ppm_w	Temp. ^oF (^oC)
Bituminous	1	14	10	73	2.5	2,220	20	210	8,100	700 (370)
	2	14	10	73	2.7	2,190	22	56	8,000	340 (170)
	3	14	10	73	2.7	2,190	19	56	40	340 (170)
	4	13	15	69	2.6	80	10	53	4	170 (80)
Low S Bituminous	1	15	9	74	2.5	600	5.7	200	5,100	700 (370)
	2	15	9	74	2.7	590	6.2	56	5,060	340 (170)
	3	15	9	74	2.7	590	5.6	56	25	340 (170)
	4	14	15	69	2.6	22	2.6	52	2	170 (80)
Sub-bituminous	1	15	14	69	2.4	215	0.68	210	3,800	700 (370)
	2	15	14	69	2.6	210	0.71	57	3,700	300 (150)
	3	15	14	69	2.6	210	0.64	57	19	300 (150)
	4	14	18	66	2.5	12	0.36	55	2	135 (60)
Lignite	1	14	17	67	2.3	850	1.8	185	11,400	700 (370)
	2	14	16	67	2.5	840	1.9	50	11,300	300 (150)
	3	14	16	67	2.5	840	1.7	50	56	300 (150)
	4	14	18	66	2.5	50	1.0	50	6	135 (60)