Hybrid SNCR/In-Duct SCR System

Dale Pfaff

FUEL TECH, INC.

Batavia, IL

Rich Abrams

BABCOCK POWER ENVIRONMENTAL

Worcester, MA

Environmental Controls Conference – Pittsburgh, PA

May 16 – 18, 2006

BabcockPower ENVIRONMENTAL

FUEL TECH® Technology for a renewed environment™

Agenda

- Hybrid Defined
- SNCR
  - Traditional
  - Re-Designed
- Compact SCR Design
  - Tools
- Hybrid Goals
- Real Life Examples
- Costs

BabcockPower ENVIRONMENTAL

FUEL TECH® Technology for a renewed environment™

Hybrid NO_x Control System "Cascade®"

- **Redesigned** SNCR System with SCR (using urea)
- Higher NO_x Reduction and Utilization than SNCR
- NH_3 slip consumed in SCR
- Low SO_2 to SO_3 Conversion Rates
- 50 - 75% overall NO_x reduction
- Low capital costs

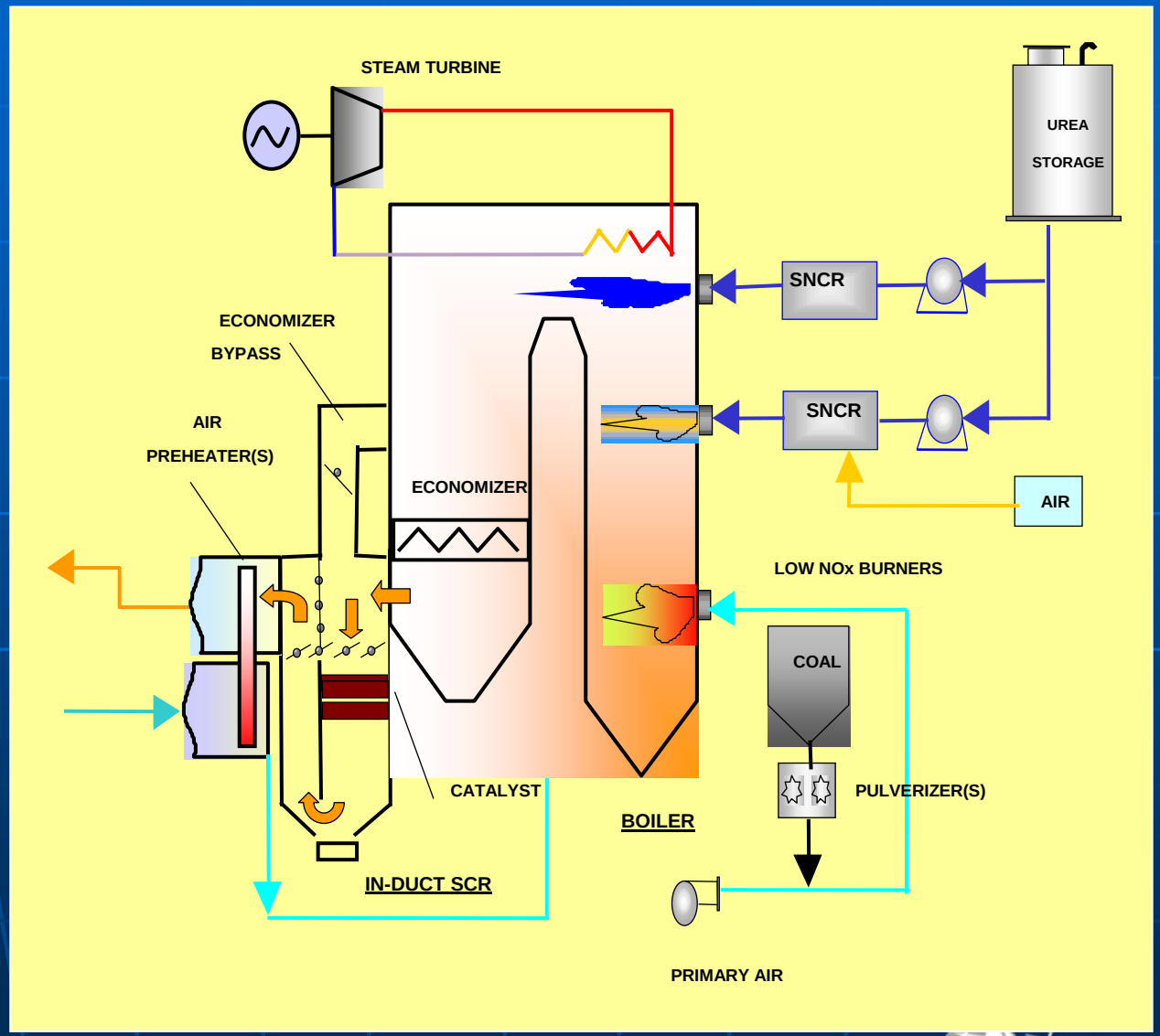

BabcockPower ENVIRONMENTAL

FUELTECH® Technology for a renewed environment™

Traditional Urea Based Selective Non-Catalytic Reduction (SNCR) of NOx

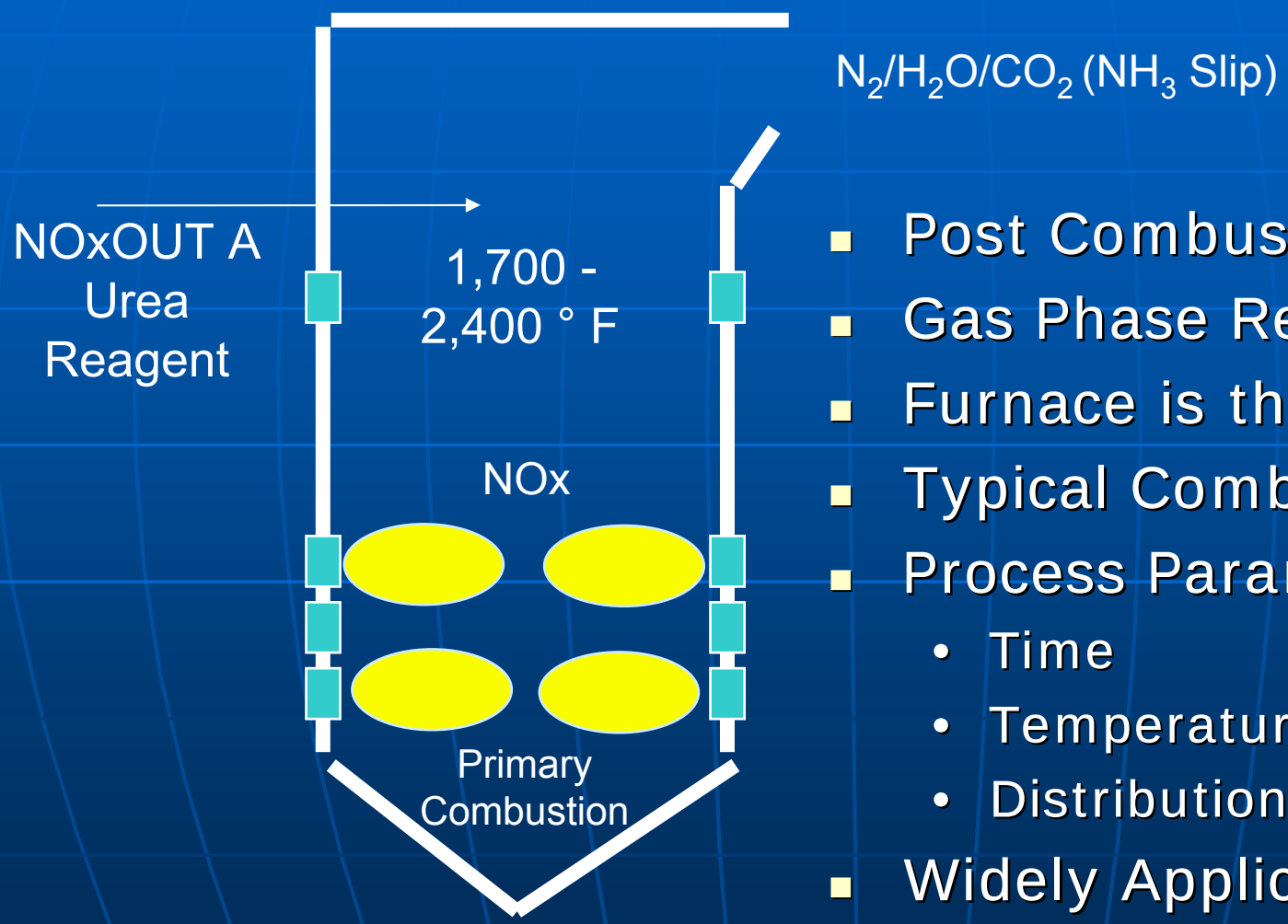

- Post Combustion
- Gas Phase Reaction
- Furnace is the Reactor
- Typical Combustion Products
- Process Parameters
  - Time
  - Temperature and Species
  - Distribution
- Widely Applicable

BabcockPower ENVIRONMENTAL

FUELTECH® Technology for a renewed environment™

“Right Side of the Slope” Injection

Low Temperatures

- Slow Droplet Evaporation
- Slow Kinetics
- Low OH Concentration
- Ammonia Slip

High Temperatures

- Rapid Droplet Evaporation
- Fast Kinetics
- Increased OH Concentration
- Urea Oxidation to NOx

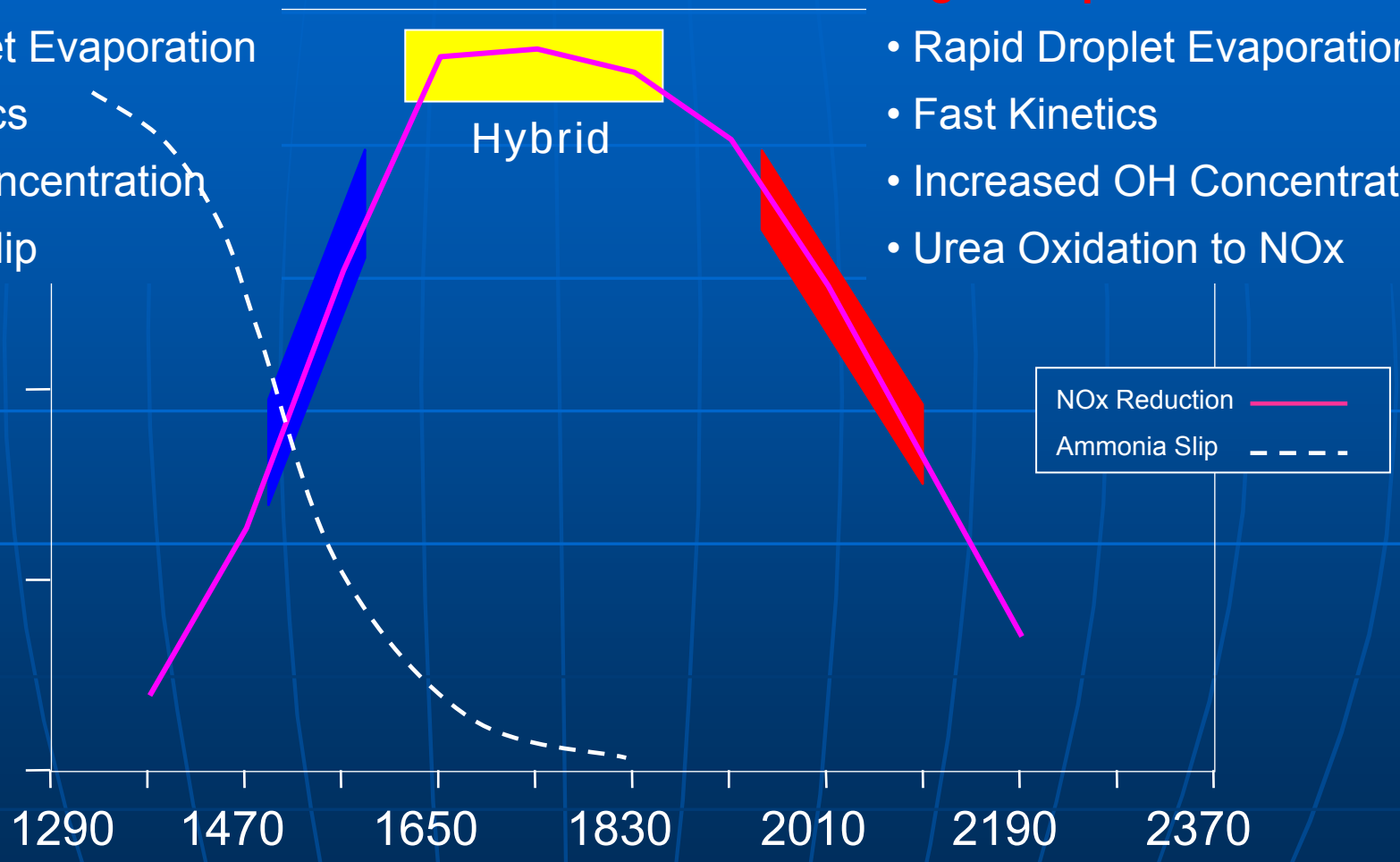

BabcockPower ENVIRONMENTAL

FUELTECH® Technology for a renewed environment™

Hybrid SNCR Injection

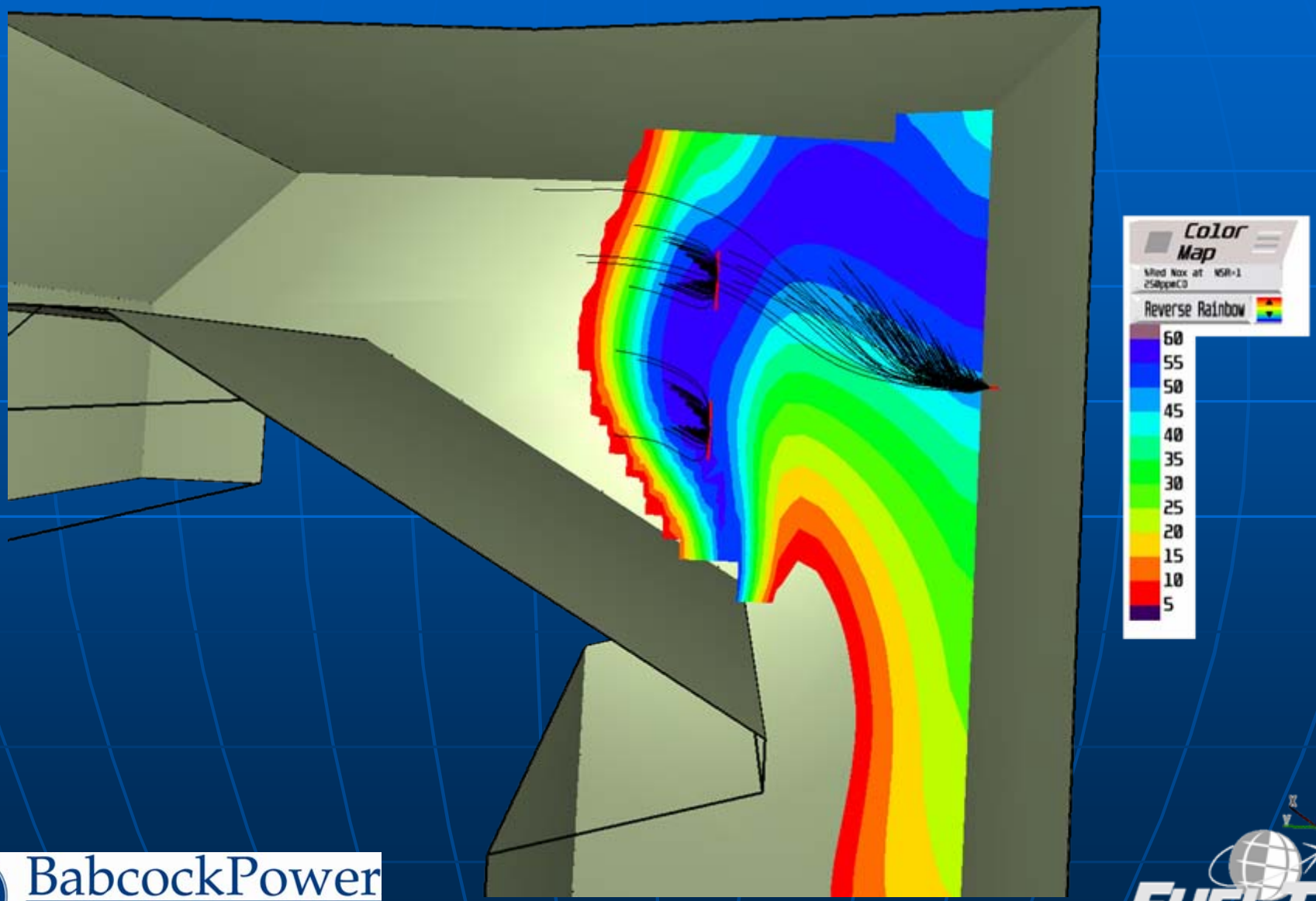

BabcockPower ENVIRONMENTAL

FUELTECH®
Technology for a renewed environment™

Hybrid In-Duct

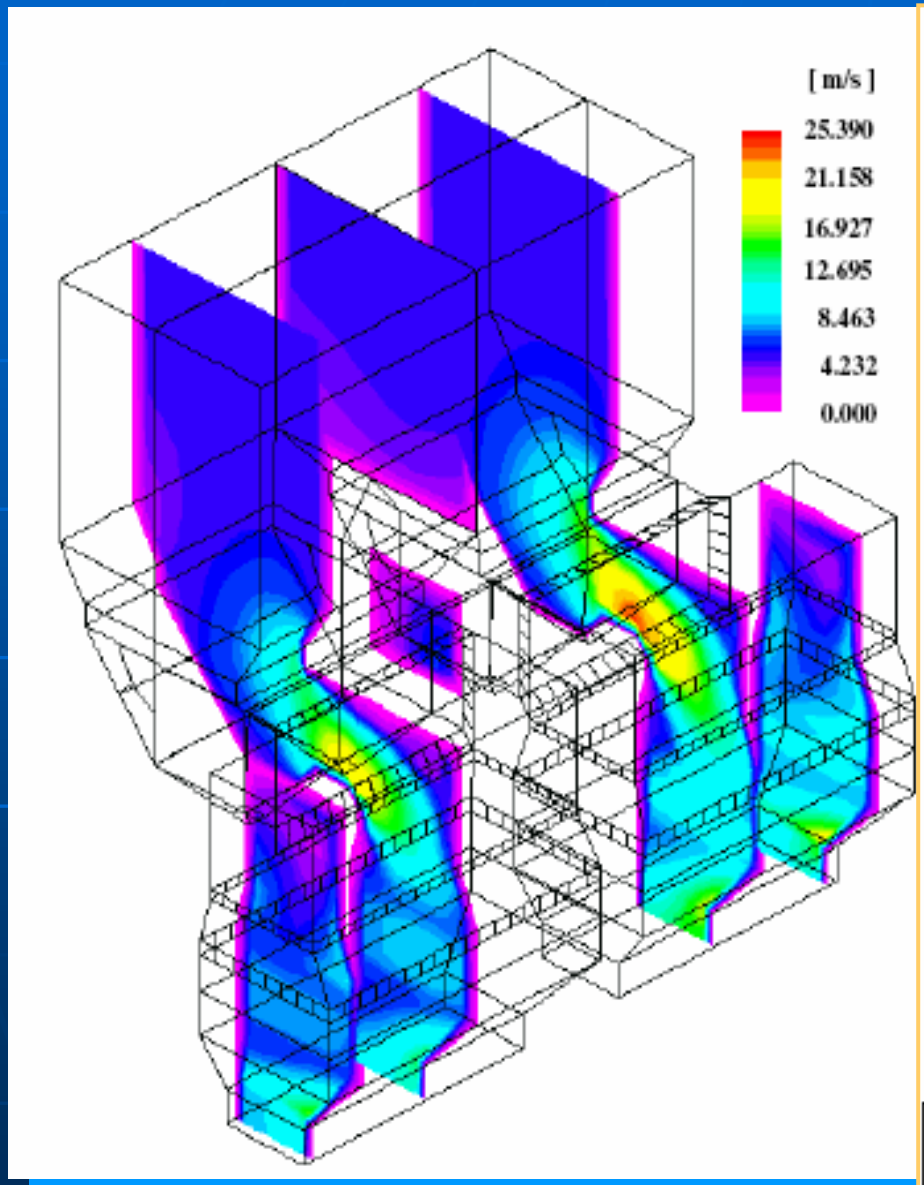

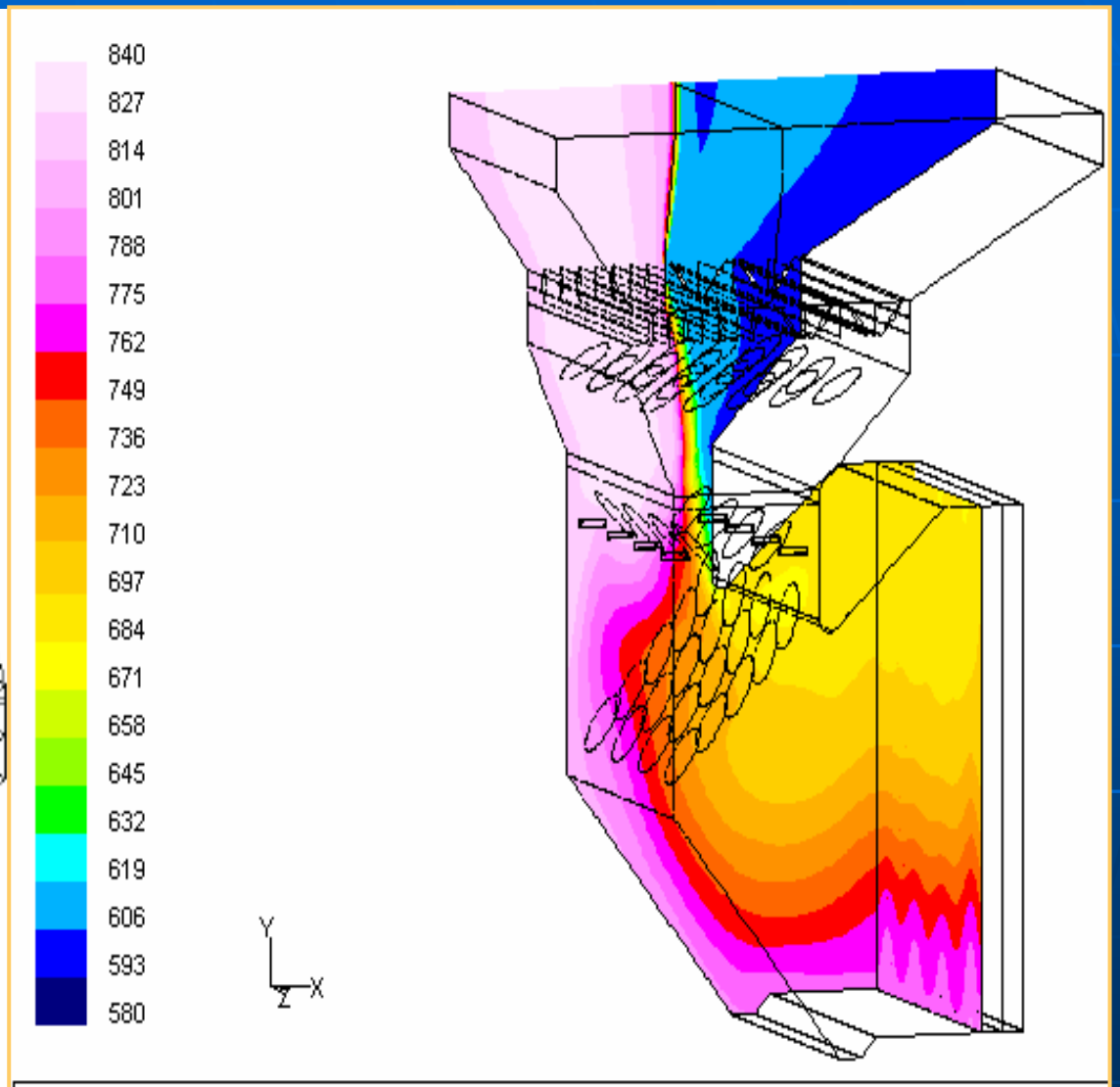

Exelon Handley 3 SCR @ MCR: Ammonia Mixers Away from Walls. Inlet & Outlet Crossmixer Stages, Geo 7
Contours of Temperature (F) on Catalyst Inlet & Reactor Centerline

BabcockPower ENVIRONMENTAL

FUELTECH® Technology for a renewed environment™

Cold Flow Models and Flue Gas Mixing

- **1:40 scale flow model**

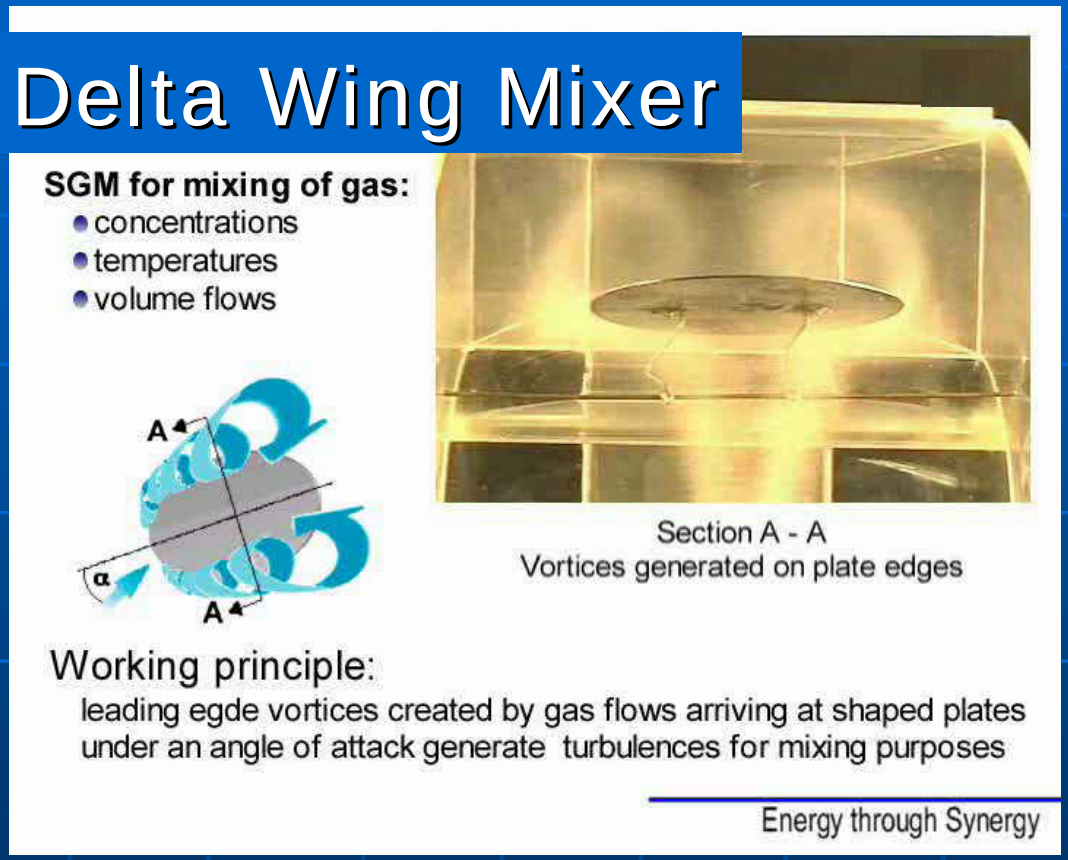

BPI makes extensive use of flow modeling to guide designs and to ensure proper distribution

BabcockPower ENVIRONMENTAL

FUELTECH® Technology for a renewed environment™

Typical Hybrid Process Goals

- Multiple Levels of SNCR Injection for Load Following Capabilities
- 50 - 75% Overall NOx Reduction, 2 - 5 ppm NH_3 Slip
- One Catalyst Layer at 1.3 m Depth
- SCR Inlet Temp = 650 °F Norm / 800 °F Max
- No Ammonia Injection Grid
- Efficient Mixing to Achieve Uniform Distribution
- SO_2 to SO_3 Conversion < 0.5 %
- Fits within the Physical Space Limitations

BabcockPower ENVIRONMENTAL

FUELTECH® Technology for a renewed environment™

Commercial Compact SCR and Hybrid (SNCR/SCR) Examples

BabcockPower ENVIRONMENTAL

FUELTECH® Technology for a renewed environment™

Example 1: Compact In-Duct SCR Exelon Handley Unit 3

- Turbo Boiler – Gas Fired
- 94% NOx Removal SCR
- In-duct Reactor
- Delta Wing Mixing System
- Honeycomb Catalyst

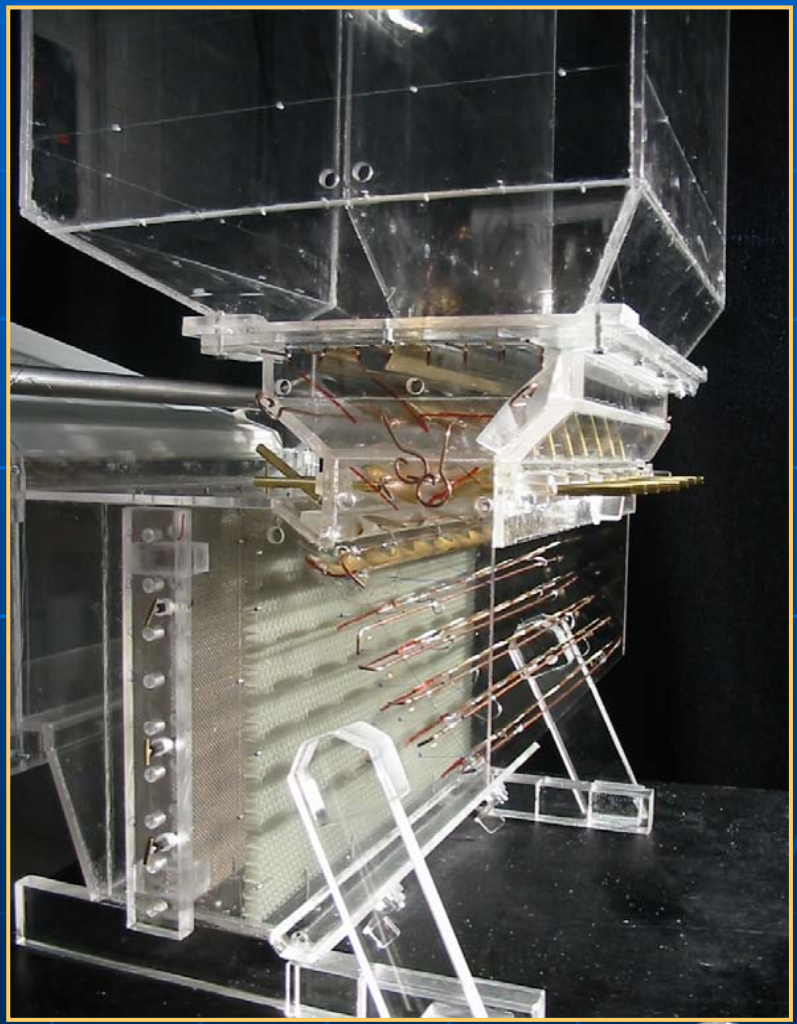

BabcockPower ENVIRONMENTAL

FUELTECH® Technology for a renewed environment™

BPI - Handley Test Results

- Full load and low load NOx outlet concentrations achieved at 0.02 and 0.01 lbs/Mmbtu respectively
- NOx removal efficiencies of >94%
- Stack ammonia slip <3 ppm measured
- SCR system pressure loss as predicted
- NH3/NOx ratios < 6% RMS, per design
- Optimization of unit in six operating days

BabcockPower ENVIRONMENTAL

FUELTECH Technology for a renewed environment™

Example 2: Fuel Tech
Seward Station - 147 MWg, Coal

- T-fired CE furnace: 1990 BL of 0.78 lb/MMBTU
- Furnace and convective pass injection

  Design Case:

  42% reduction, 0.45 #/MMBtu, <5 ppm NH_3 slip

  Operational Case:

  35% reduction, 0.50 #/MMBtu, <2 ppm NH_3 slip

  Less than 10 % in convective pass

  High Ammonia Slip Case

  54% reduction, 0.36 #/MMBtu, ≈10 ppm NH_3 slip

  Short-term testing
- Increased chemical in convective pass

BabcockPower ENVIRONMENTAL

FUEL TECH® Technology for a renewed environment™

SCR Expanded-duct Reactor Design

- Required NH_3 Reduction from 20 ppm to 2 ppm
- Rapid Flue Gas Mixing
- Minimum SO_3 production (Ammonium Salts)
- Minimum pressure drop
- Withstand coal fired gas stream

BabcockPower ENVIRONMENTAL

FUELTECH® Technology for a renewed environment™

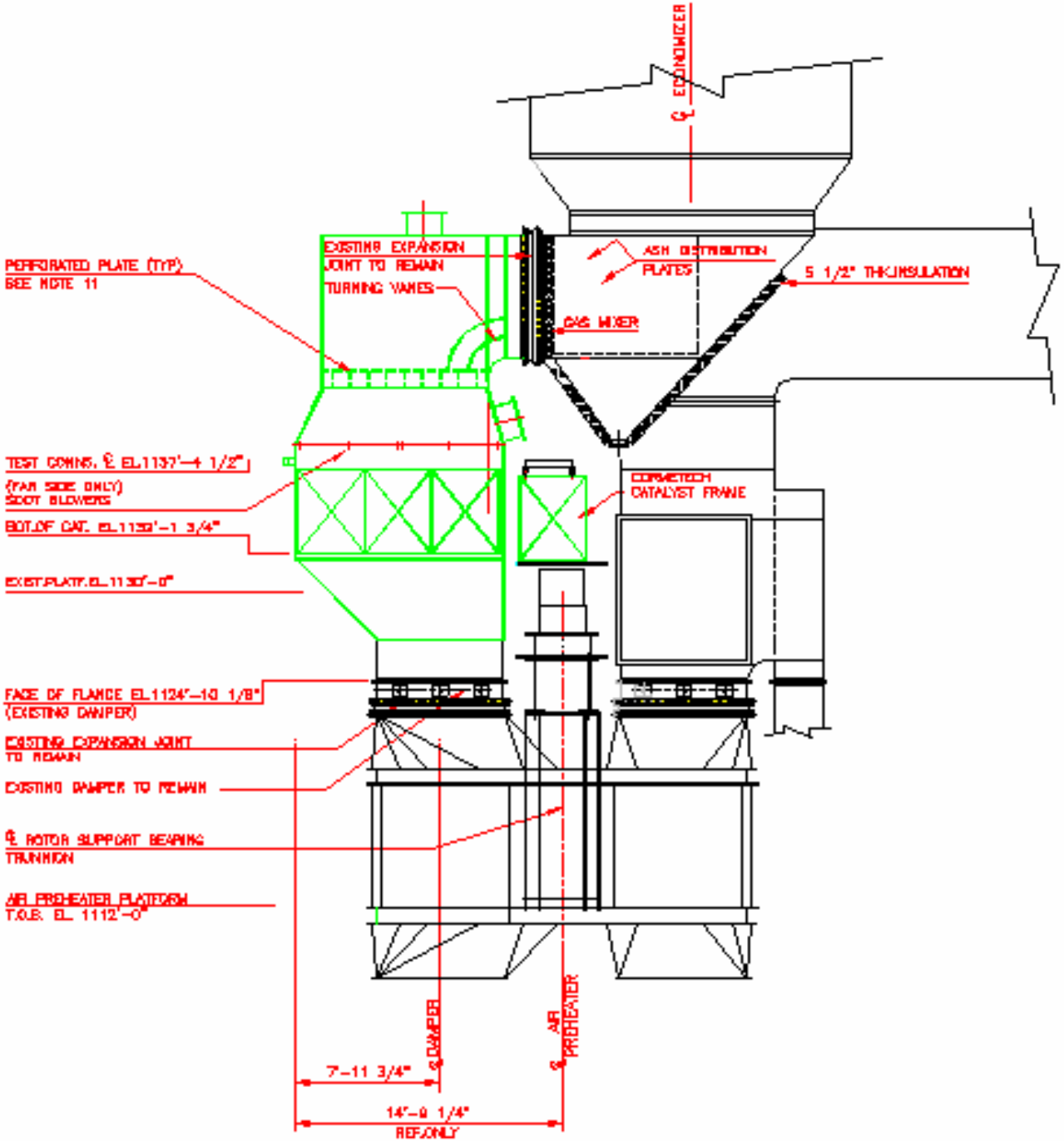

BabcockPower ENVIRONMENTAL

FUELTECH® Technology for a renewed environment™

Hybrid SNCR/SCR Performance

- Maximum Reduction Achieved (>50%)
  - System Tuned to 2, 10, or 20 ppm slip
  - Low-Load Operation at 2 ppm Slip.
- Increased Chemical Utilization
- Less than 2 ppm ammonia slip at SCR Outlet
- Hybrid SNCR/SCR Operated for more than 5 years

BabcockPower ENVIRONMENTAL

FUELTECH® Technology for a renewed environment™

Example 3; High Load (320MWe) Hybrid Results

Fuel	NOx Control System	NSR	SNCR Reduction	SNCR Utilization	SCR Reduction	Total Reduction	Overall Utilization
Coal	Standard SNCR	1.19	37.0%	31.1%	-	37.0%	31.1%
Coal	Hybrid	0.79	41.1%	59.2%	16.3%	50.7%	64.2%
Coal	Hybrid	1.15	36.9%	45.7%	54.2%	71.1%	61.8%
Gas	Hybrid	1.44	36.1%	38.6%	78.9%	86.5%	60.1%
Gas	Hybrid	1.56	39.0%	37.1%	83.6%	90.0%	57.7%

- Ammonia Slip at 10 ppm or less

BabcockPower ENVIRONMENTAL

FUELTECH® Technology for a renewed environment™

Example 4; AES Greenidge Application Hybrid System

- 115 MW Coal Fired Unit, 2.9% S Bituminous coal
- Two levels of SNCR
- In-duct reactor; single layer of catalyst
- Short distance between economizer and reactor
- SNCR provides ~ 40% reduction
- SCR provides balance
- Overall system provides ~ 66% reduction

BabcockPower ENVIRONMENTAL

FUELTECH® Technology for a renewed environment™

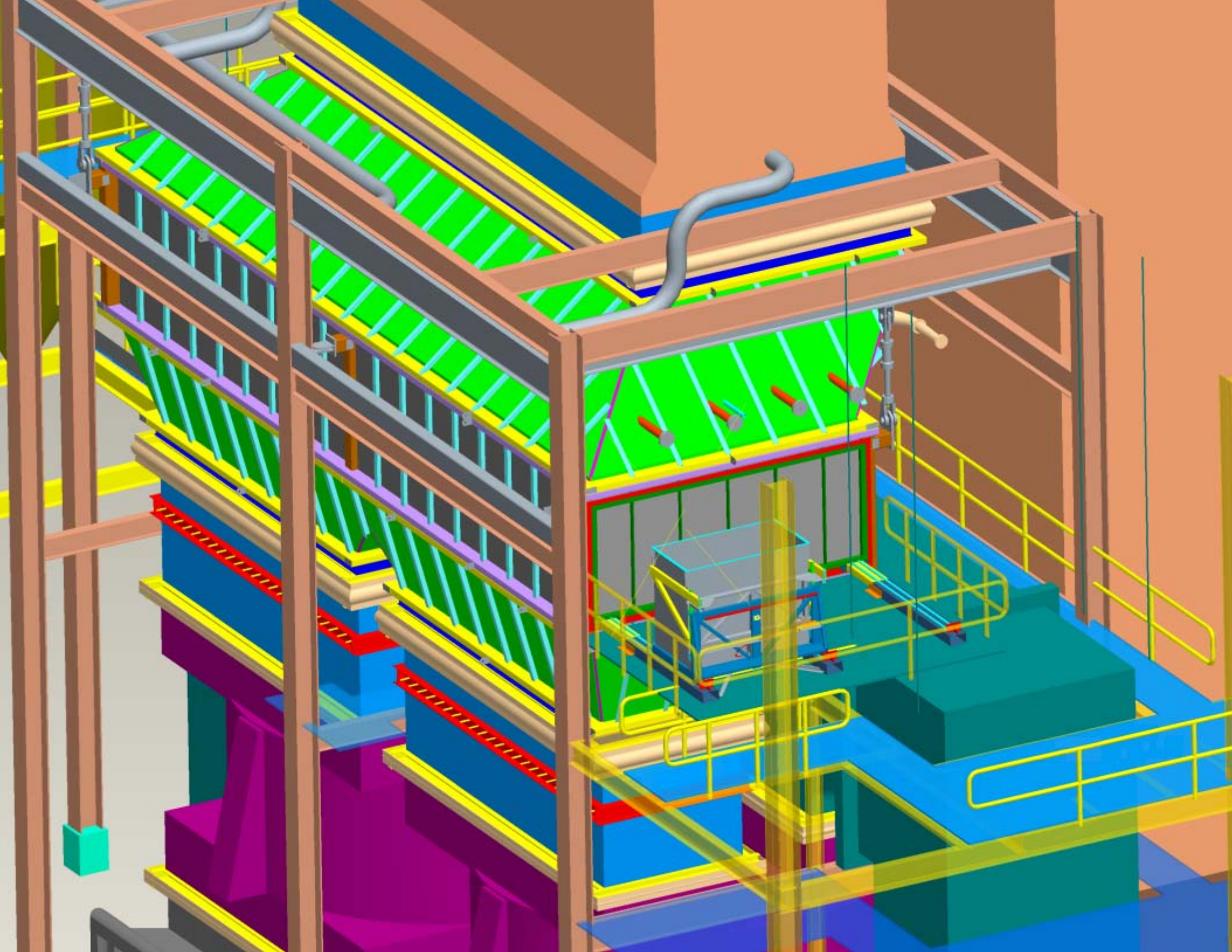

All-In Capital Cost vs. NOx Reduction

SCR	$70 - +$200?/KW	80 - 90%
SNCR	$10 - $30/KW	20 - 35%
Hybrid	$35 - $80/KW	50 - 75%

BabcockPower ENVIRONMENTAL

FUELTECH® Technology for a renewed environment™

Conclusions

- Hybrid combines redesigned SNCR with SCR
- Control Flexibility: Operating vs. Capital Costs
- Hybrid can control slip and improve utilization
- 50% and 75% NOx Reduction with significantly reduced SCR retrofit capital
- Each Unit Must Be Evaluated to Determine Feasibility for placement of an IN-DUCT or COMPACT SCR.
- 2 Utility and 3 Industrial Hybrid Applications

BabcockPower ENVIRONMENTAL

FUELTECH® Technology for a renewed environment™

Contacts:

Mr. Dale Pfaff
Fuel Tech, Inc.
(630) 845-4453
dpfaff@fueltechnv.com

Mr. Rich Abrams
Babcock Power Environmental
(508) 854-1140
rabrams@babcockpower.com