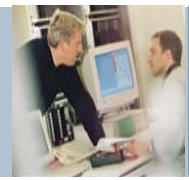
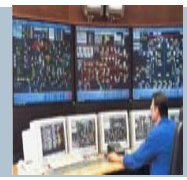

steag
encotec America

Steag's Long-Term Catalyst Operating Experience and Cost

Hans Sobolewski, STEAG LLC
Hans Hartenstein, STEAG LLC
Marilynn Martin, STEAG LLC

2006 Environmental Controls Conference
Sponsored by
U.S. Department of Energy's National Energy Technology Laboratory
May 16-18, 2006
Pittsburgh, Pennsylvania

Power Generation and District Heating

Steag SCR Operating Experience

- Steag is Europe‘s second largest power generator from bituminous coal.
- Steag owns and operates more than 10,000 MW of electric and steam generating capacity.
- Over 2 million hours of SCR operational experience.
- Steag operates 24 SCR systems
  - 16 Bituminous coal-fired; up to 10% supplemental fuels
  - 8 Refinery residue-fired
- SCR Arrangements
  - 17 High-Dust
  - 1 Low-Dust
  - 6 Tail-End

steag
encotec
America

Steag’s Various SCR Arrangements

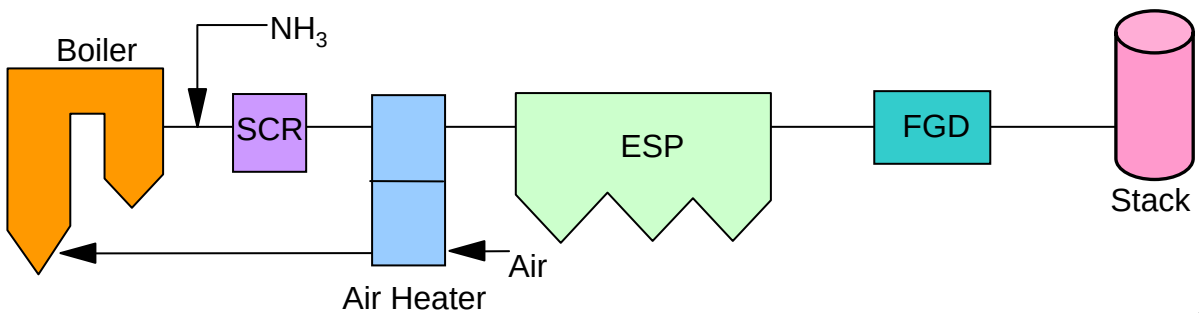

High-Dust
e.g. Voerde 4

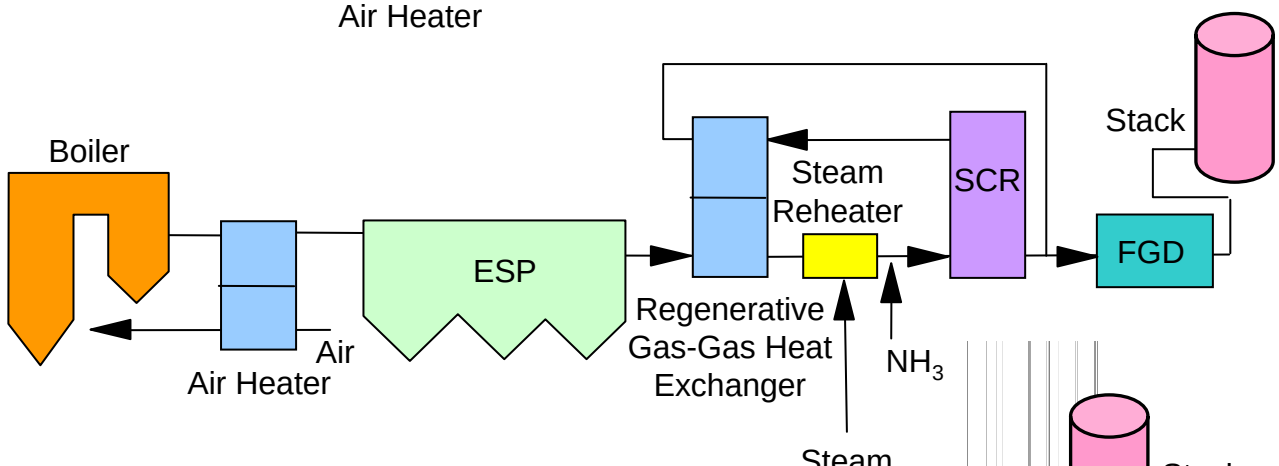

Low-Dust
e.g. Walsum 7

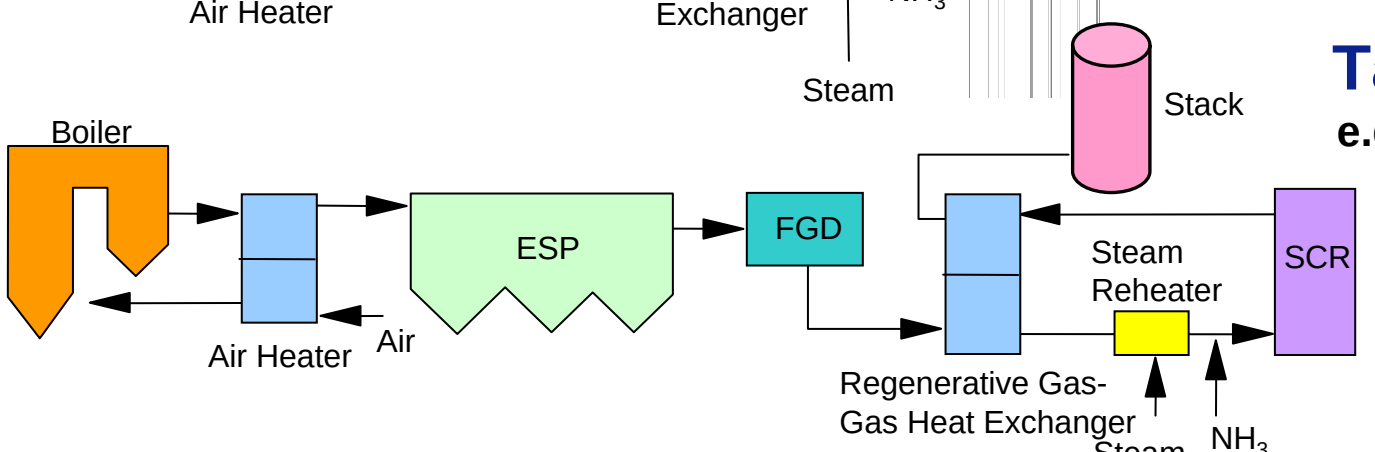

Tail-End
e.g. Herne 3

steag
encotec
America

Herne Cogeneration Plant Unit 3

- 300 MW electricity
- Pulverized coal
- U-fired, wet bottom boiler
- Tail-End SCR commissioned in 1988

- Catalyst - Honeycomb
  - 1 ½ layers of honeycomb catalyst, initial fill
  - 2 ½ spare layers, still empty

- Operation during past 110,000 hours extremely uneventful

- No catalyst addition is planned until 2007

- Total catalyst replacement cost less than 0.9% per 1,000 hours

Herne Unit 3

Tail-End SCR

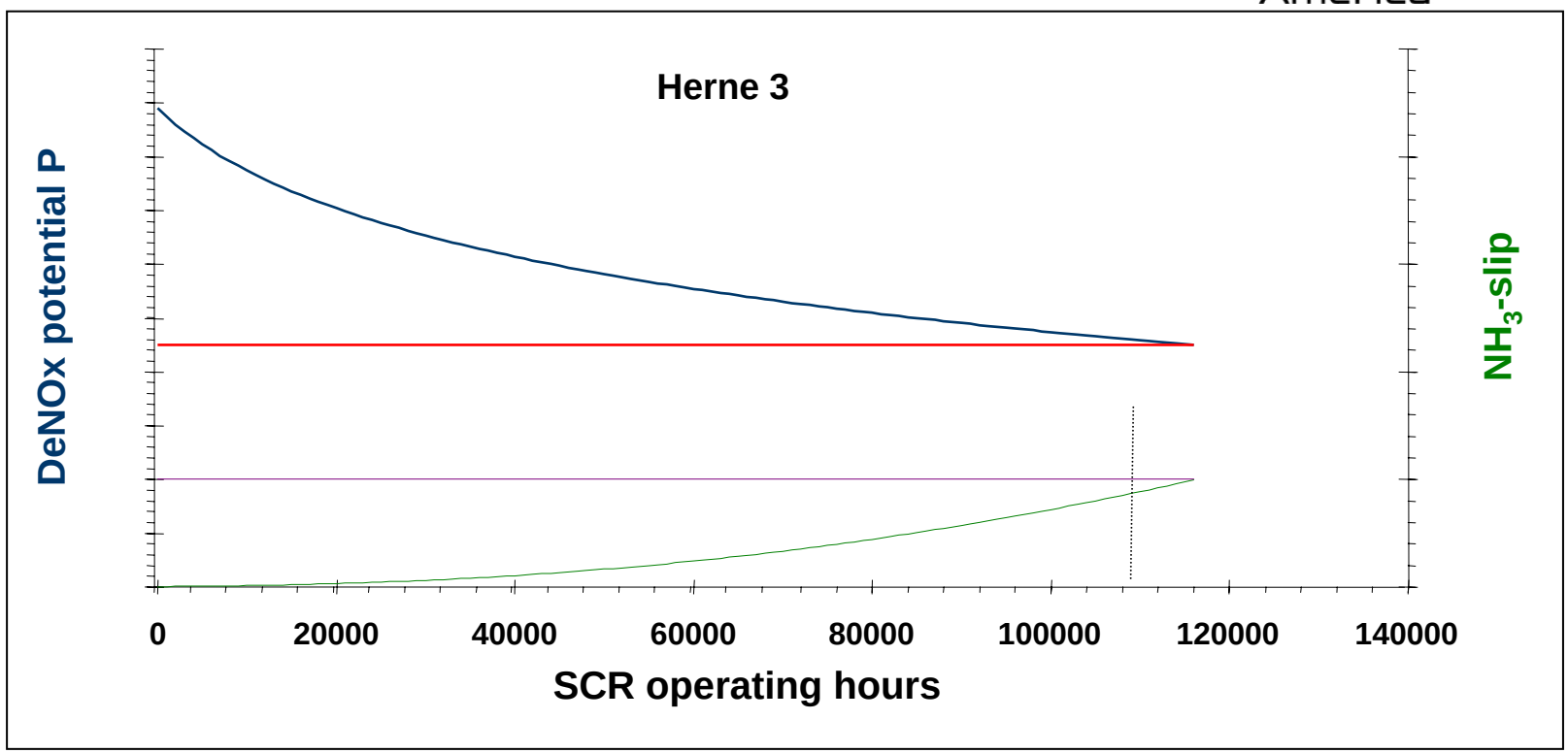

Herne 3 SCR Commissioning in 1988

- **Operation during the past 110,000 operating hours has been extremely uneventful.**
- **No catalyst addition is planned until 2007.**
- **Total catalyst replacement cost = 0.9% per 1,000 hours.**

steag
encotec
America

Herne Cogeneration Plant Unit 4

- 385 MW electricity
- 550 MW district heat
- Pulverized coal, bone meal, waste bituminous coal, ash >40%, sulfur, <15%
- Wall-fired, dry bottom boiler
- High-dust SCR system commissioned in 1989

- Catalyst – Honeycomb and Plate
  - 2 layers of honeycomb catalyst initial fill (installed in layers 1 & 3)
  - 2 spare layers (layers 2 and 4), initially empty
  - Erosion problems from waste coal led to the catalyst replacement
  - Four half layers of plate catalyst installed, hours were reset to 0.

- During past 110,000 operating hours, deactivated catalyst replaced with new or regenerated plate catalyst.

- Total catalyst replacement = 3.45% initial cost per 1,000 hours.

Herne Unit 4

High-Dust SCR

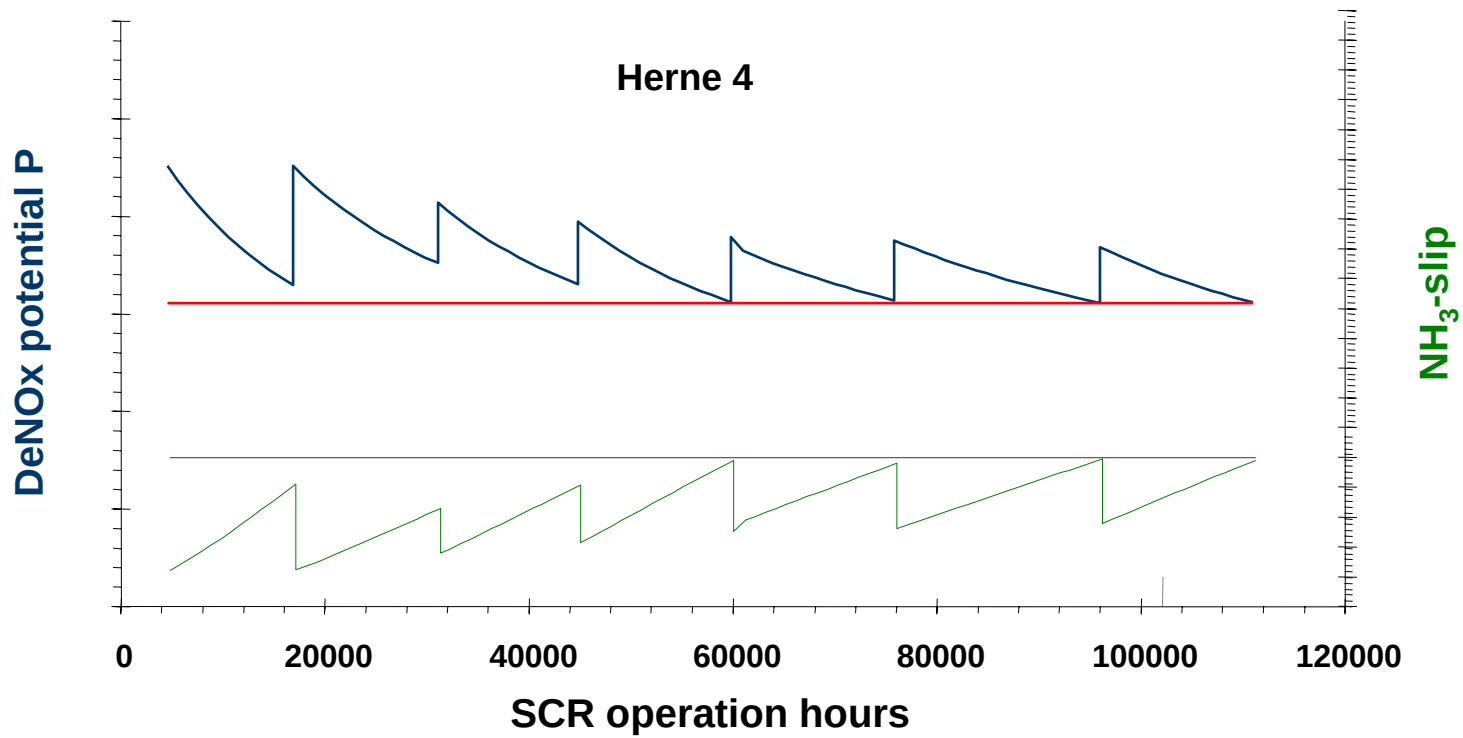

Herne 4 SCR Commissioning in 1989

- **Severe erosion problems resulting from waste coal led to the replacement of both honeycomb layers in 1991.**
- **Since then only plate catalyst has been used, hours reset to 0.**
- **Total catalyst replacement cost = 3.45% per 1,000 hours**

Herne Unit 4

High-Dust SCR

steag

encotec America

Herne 4 Catalyst Exchange Logbook

layer	Initial (hc)	0 / plate	16,500	31,000	45,000	60,000	75,800	96,000	105,000
1.1	HC 1	A	A	E	E	E	E	J /reg	J
1.2		B	B						
2.1			E /new	B	G /new	G	G	G	G
2.2				F /new	F	F	F	F	K /reg
3.1	HC 2	C	C	C	C	D	I /new	I	I
3.2		D	D	D	D	H /new	H	H	H
4.1									
4.2									

Removal of honey-combs; addition of plate layers.

Addition of new half plate layer E.

Removal of layer A to regeneration, addition of new plate layer F.

Removal of layer B to regeneration, addition of new plate layer G.

Removal of layer C to disposal, addition of new plate layer H.

Removal of layer D to regeneration, addition of new plate layer I.

Removal of layer E to regeneration, addition of regenerated plate layer J.

Removal of layer F to disposel, addition of regen. layer K.

steag
encotec America

Comments and Cost Breakdown

- Honeycomb unable to withstand the erosion from the high ash waste coal burned.
- Fill of 4 half plate layers was set to represent 100% of the initial cost.
- Total catalyst exchange cost during the last 110,000 SCR operating hours was found to be:
  - For catalyst replacement 9 (4 initial and 5 replacement) new half layers (= 225% of initial cost) plus 2 regenerated replacement layers (= 24% of initial cost).
  - For field labor cost for the installation of 7 half layers and the removal of 6 half layers was found to be 13 x 10% of initial cost = 130%.
- Total catalyst replacement costs = 3.45% per 1,000 hours.

steag
encotec
America

Voerde Power Station Unit 4

- 760 MW electricity
- Pulverized coal (world market bituminous coal), ash <15%
- Wall-fired, dry bottom boiler
- High-dust SCR commissioned in 1989

- Catalyst - Honeycomb and Plate
  - 3 layers of honeycomb catalyst (initial fill in layers 1, 2, and 3)
  - Regenerated plate catalyst replaced some plugged honeycomb
  - 1 spare layer (layer 4) still empty
  - Operates with new and regenerated honeycomb and plate

- LPA pluggage caused 2 unexpected catalyst exchanges

- Steag LPA screens installed; no further LPA pluggage problems

- Total catalyst replacement cost = 2.74% per 1,000 hours

Voerde Unit 4

High-Dust SCR

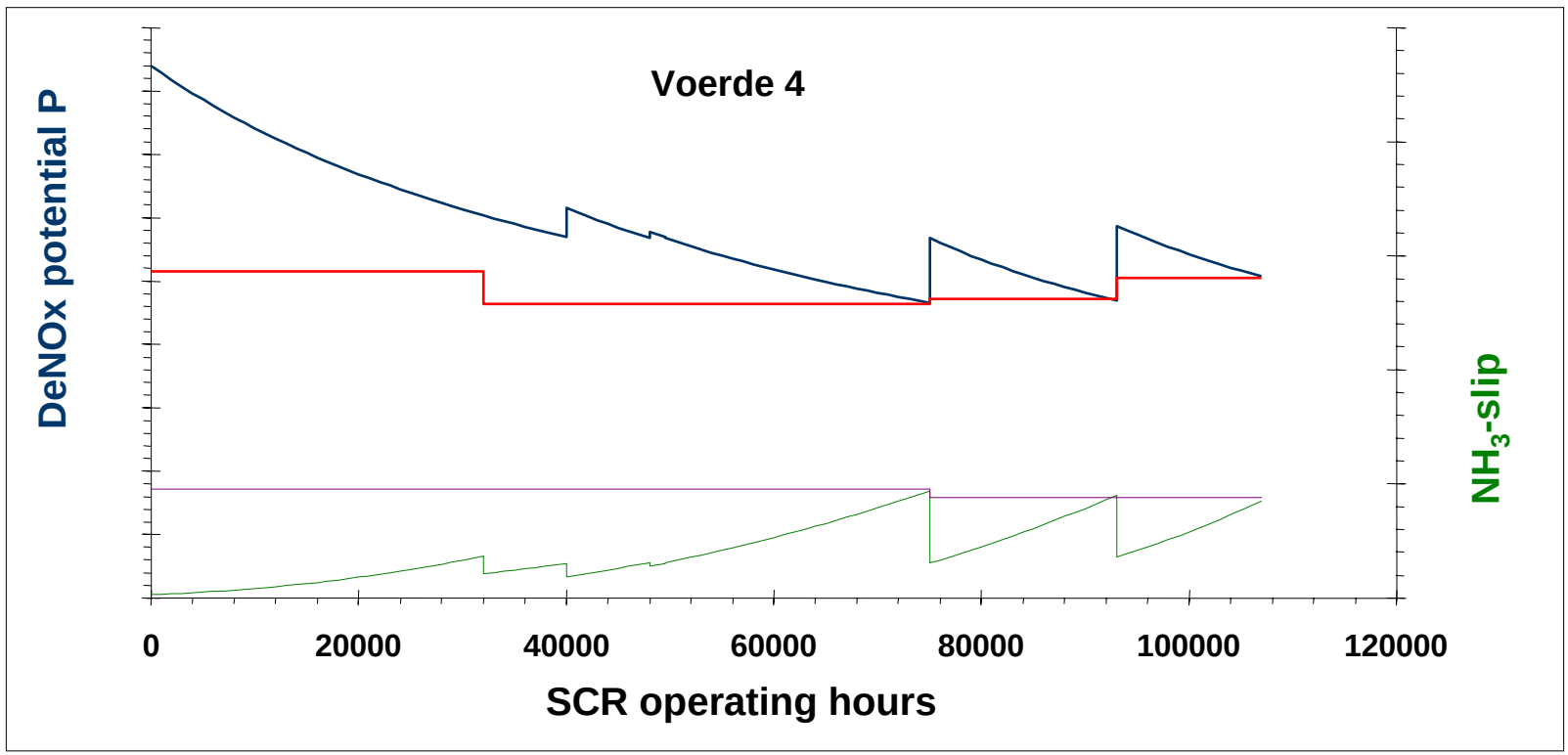

Voerde 4 SCR Commissioning in 1989

- **LPA catalyst pluggage problems appeared unexpectedly in 1996.**
- **After installation of Steag's LPA screens, no further problems with LPA intrusion into the SCR reactor occurred.**

Voerde Unit 4

High-Dust SCR

steag

encotec America

Voerde 4 Catalyst Exchange Logbook

layer	Initial 0	40,000	48,000	49,000	75,000	93,000	107,000
1.1	A (hc)	D (pl)	D	D	C (reg)	C	C
1.2		E (pl)	E	E			
2.1	B (hc)	B	A (reg)	A	A	A	B (reg)
2.2							
3.1	C (hc)	C	C	B (reg)	B	F (new)	F
3.2							
4.1							
4.2							

Removal of layer A (plugged) to regeneration, addition of regenerated plates from Herne 4 and new plate layers D and E.	Removal of layer B to regeneration, addition of regenerated layer A.	Removal of layer C to regeneration, addition of regenerated layer B.	Removal of layers D, E to regeneration, addition of regenerated layer C.	Removal of layer B to regeneration, addition of new honey-comb layer F.	Removal of layer A to regeneration, addition of regenerated layer B.

Comments and Costs

- Initial fill (3 honeycomb layers) was to represent 100% initial cost.
- Total catalyst exchange cost during the last 107,000 SCR operating hours was found to be:
  - For catalyst replacement 5 (3 initial, 2 half plate and 1 honeycomb replacement) new layers (= 167% of initial cost) plus 4 regenerated honeycomb replacement layers (= 66% of initial cost).
  - For field labor cost for the removal and installation of 6 layers was found to be 6 x 10% of initial catalyst cost = 60%.
- Total catalyst replacement costs = 293% or 2.74% of initial cost per 1,000 operating hours.
- Note that 2 catalyst exchanges were caused by LPA pluggage and not by normal catalyst deactivation.

steag
encotec America

Summary and Conclusions

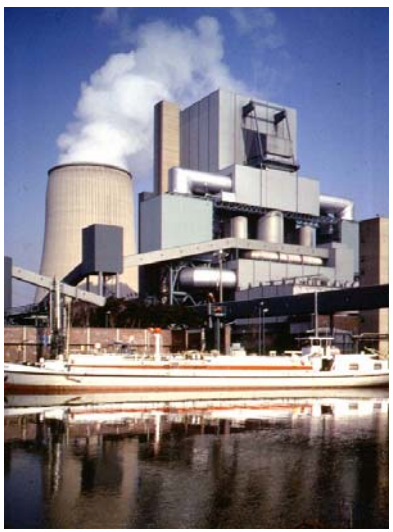

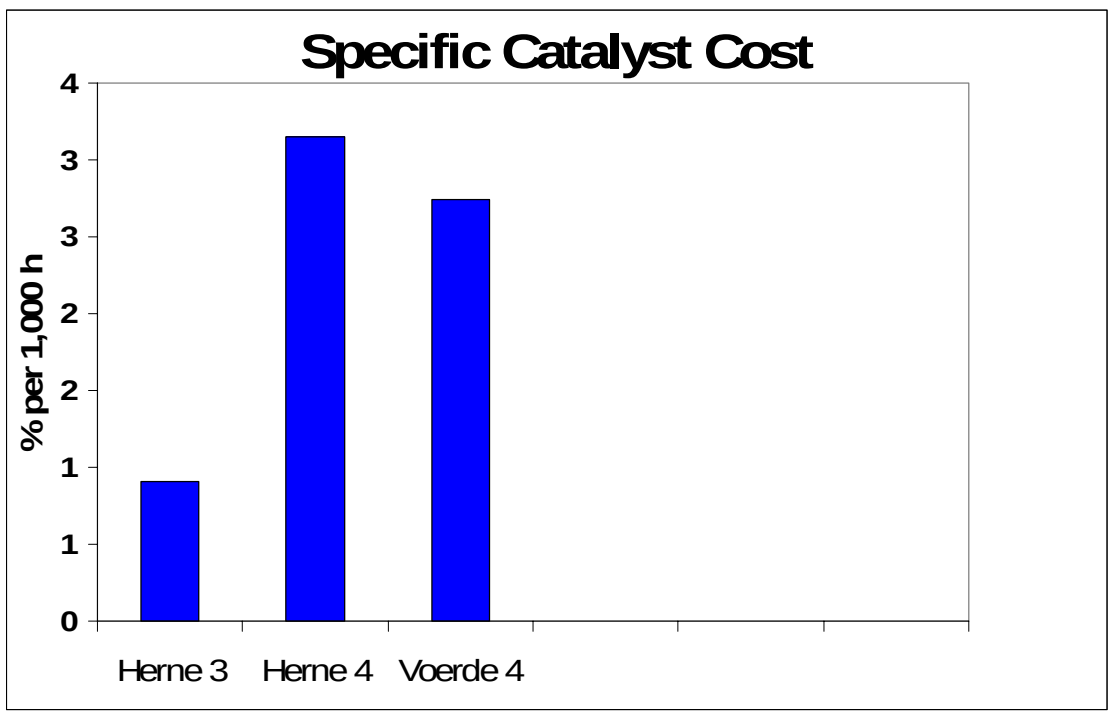

Specific catalyst cost vary highly depending on:

- **The SCR arrangements: tail-end approximately only 1/3 of high-dust arrangements despite extensive use of regeneration.**
- **The fuel: high ash (i.e. waste coal) versus high CaO (i.e. PRB) versus high vanadium (i.e. pet coke).**

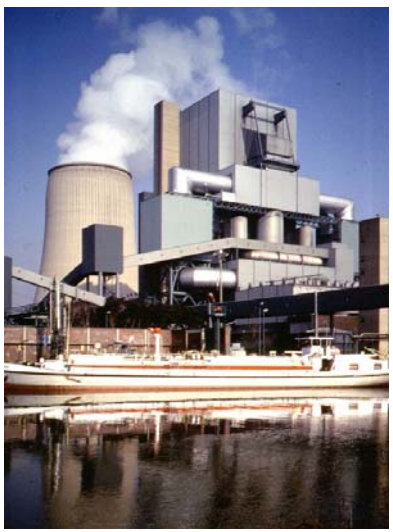

Summary and Conclusions

- Catalyst is viewed and treated by Steag as a commodity. However, not all catalyst types are suitable for all applications.
- Each type of catalyst has its distinct advantages and disadvantages. The selection of the best catalyst type requires an economic evaluation on a case by case basis.
- The use of new versus regenerated catalyst depends solely on market conditions and prices. The prices of regenerated catalyst varied between 25% and 65% of new catalyst, depending on the price of new catalyst and the type of regeneration process used and required.
- Steag found no difference in longevity or deactivation rate between regenerated and new catalyst. However, the $SO_2/S0_3$ conversion rate may differ significantly , depending on the regeneration process used.

steag
encotec
America

Questions?

Steag's SCR experience:

~ 2 million hours of SCR operation