Oxy-Combustion Process for CO_2 Capture from Coal-Fired Power Plants: Engineering Case Studies and Engineering Feasibility Analysis

Florian Gautier[*1], Fabienne Châtel-Pélage[1], Rajani K Varagani[1], Pavol Pranda[1], Denny McDonald[2], Doug Devault[2], Hamid Farzan[3], Ronald L. Schoff[4], Jared Ciferno[5], Arun C. Bose[5]

[1]American Air Liquide
Chicago Research Center, Countryside, IL, USA

[2]The Babcock &Wilcox Company (B&W)
Barberton, OH, USA

[3]The Babcock &Wilcox Company (B&W)
B&W Research Center, Alliance, OH, USA

[4]Parsons Corporation
Pittsburgh, PA, USA

[5]U.S. Department of Energy
National Energy Technology Laboratory, Pittsburgh, PA, USA

Abstract

This paper describes the Oxy-Combustion (OC) technology to capture CO_2 emissions from pulverized coal (PC) fired power plants. Previous publications[†] described the pilot scale tests performed on the technology along with economic assessment. Upon successful pilot demonstration of the technology and favorable economics compared to post-combustion capture technology, engineering feasibility study has been launched.

Detailed process simulations and engineering analysis are being performed on 550 MWe net power plant incorporating supercritical and ultra supercritical steam cycles. Air Separation Unit (ASU) design, boiler design and modifications, carbon dioxide compression and purification unit (CO_2 unit) development are being carried out with fine details along with the cost estimations. Currently, calculations are being finalized for supercritical case and initiated for ultra supercritical case. Results will be available in few weeks and will be presented in the paper.

An engineering feasibility study to retrofit OC technology is in progress on a 25 MWe existing PC unit. Functional analysis has begun with process heat and mass balances at various operating conditions, providing the conditions and information of new equipment required. No showstoppers were identified to retrofit the technology. Detailed cost estimation is also in progress to assess the cost required to perform a commercial demonstration of the OC technology on the plant being considered.

Keywords: Oxy-Combustion, CO_2 capture, CO_2 purification, engineering study, cost assessment

---

[*] Corresponding Author: Florian.Gautier@airliquide.com, +1-708-579-7814

[†] Varagani R., Châtel-Pélage F., Pranda P., Lu Y., Chen S., Rostam-Abadi M., Farzan H., Vecci and S. J., Bose A., *Performance Simulation and Cost Assessment of Oxy-Combustion Process for CO_2 Capture from Coal-Fired Power Plants*, Fourth Annual Conference on Carbon Sequestration, Alexandria, VA, 2005

Introduction

The requirement for energy is growing leaps and bounds worldwide with increasing industrialization. The International Energy Agency (IEA) projects that the energy demand will increase by 70% over the next 30 years[1]. Coal currently supplies over 38% of world's electricity needs and over 50% of US electricity needs[1]. Coal fired power plants represent one of the largest CO_2 contributors in the United States. With potential implications surrounding global climate change and carbon dioxide (CO_2), technology options are being investigated for mitigating carbon dioxide emissions. In order to have affordable electricity with sustained environment, it is vital to have clean electricity generated from an abundant and economic fuel such as coal.

Various Oxy-Combustion (OC) technology developments were performed and are being performed by Air Liquide to capture carbon dioxide (CO_2) from pulverized coal (PC) fired power plants. Tests were performed on 1.5 MW_{th} pilot scale boiler[2] and the operation of the boiler under OC mode has been demonstrated along with a safe method of transition of the boiler from air combustion mode to OC mode. Performance and cost estimation[3] was performed (following DOE[4,5] guidelines) on a 530 MWe gross sub-critical PC plant, showing that oxy-fuel combustion with CO_2 capture is competitive with conventional amine scrubbing process (MEA). In addition, these studies identified areas for process improvements that have potential for significant decreases in CO_2 mitigation costs compared to amine scrubbing. OC technology was successfully demonstrated at pilot scale and proved to present favorable economics compared to the post-combustion capture technology (MEA). With additional support from DOE-NETL, Air Liquide launched an engineering performance and cost assessment study on high efficiency PC plants, evaluating supercritical (SC) and ultra supercritical (USC) steam cycles under OC mode. At the same time, a more detailed engineering feasibility study to retrofit PC-OC technology is in progress on an existing 25 MW_e PC unit.

This paper describes the OC technology; a promising CO_2 capture technology for pulverized coal (PC) fired power plants, presenting:

1. Engineering performance and cost assessment of OC technology on a 550 MW_e net SCPC and USCPC plants
2. Engineering feasibility study on an existing 25 MW_e PC plant to retrofit OC technology

Description of the OC process

In the OC process, N_2 is separated from O_2 in the air prior to the combustion. The flue gas is thus mainly composed of sequestration-ready CO_2, along with easily condensable water. As combustion with pure oxygen yields very high temperatures, incoming O_2 is diluted with recycled flue gases (FGR) to obtain desired temperature and flow profiles. Figure 1 illustrates the process.

Challenges of the OC Process

1. Air infiltration into the boiler is an issue as it dilutes the resulting flue gases. Various options are being investigated to minimize it.
2. Combustion of fuels in pure oxygen would occur at temperatures too high for existing boiler or turbine materials. This issue is being addressed by diluting the oxygen with recycled flue gases. This only results in a slight increase of the parasitic power load. Further developments aim at reducing or suppressing the flue gas recycle, and are associated with developments of new materials.

3. All technologies for CO_2 capture from power plant increase the cost of electricity. In the PC-OC technology, a major part of this cost is due to the Air Separation plant (CAPEX and power consumption). Therefore, all developments that target decrease of the oxygen cost when supplied in thousands of tons per day, will strongly improve the competitiveness of this technology. Such developments include steady improvements of the cryogenic distillation process (leading to significant cost decrease, even in the past 10 years), as well as investigations of alternative oxygen supply processes.

Main benefits of the OC Process

1. Reduction of CO_2 – a greenhouse gas.
2. 60-70% reduced NO_x emissions in OC with FGR versus air-fired combustion.
3. Additional benefits:
   - ✓ The technology can readily be applied to either new or existing PC plants,
   - ✓ Equipment already proven in the power generation industry is utilized,
   - ✓ Key process principles already proven including air separation and FGR,
   - ✓ No scale up issues: all components are already available at utility plant scale,
   - ✓ Control during startup, shutdown, load following, and trips is very similar to a conventional PC plant

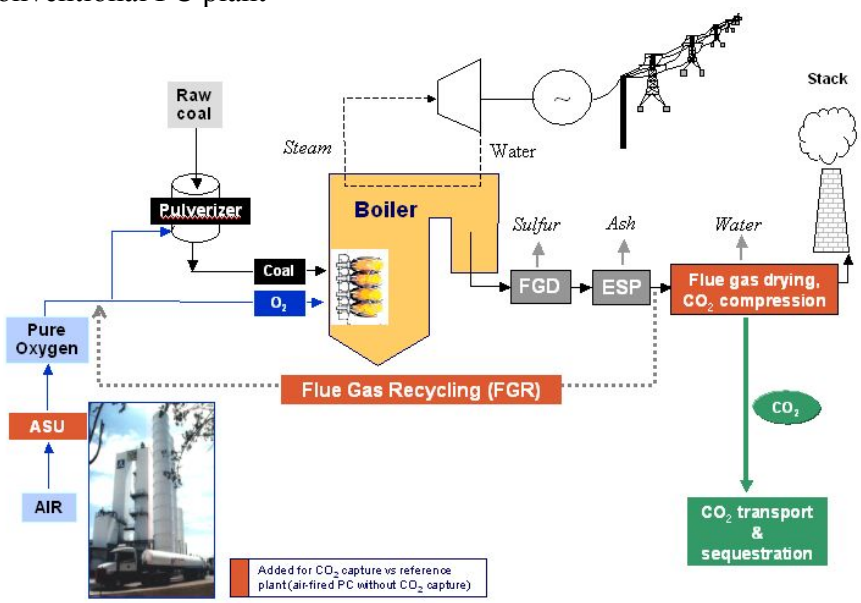

Figure 1: Oxy-Combustion process for CO_2 capture from PC boiler (schematic)

Methodology and results

1. <u>Engineering performance and cost assessment of OC technology on a 550 MW_e net supercritical and ultra-supercritical PC plants</u>

After performing extensive simulations and cost assessment on the sub-critical PC plant[2,3], the scope was extended to address the performance, simulation and cost of the PC-OC technology designed to capture and compress CO_2 from advanced supercritical (SC) and ultra-supercritical (USC) steam cycles with more engineering and vendors data input. The gross power of the plant, firing bituminous coal, is adjusted to generate 550 MWe net power output irrespective of the process. The captured stream was compressed to 152 bar (~2,200 psi). Increasing the efficiency of the plant with more efficient steam cycles will result in smaller ASU and O_2 requirement and therefore better economics is envisioned.

Approach and Assumptions

The design and cost estimation of the OC-PC Boilers was conducted by Babcock & Wilcox in conjunction with Air Liquide, who provided the Air Separation Unit (ASU) and CO_2 unit system designs, and RDS, who performed overall Balance of Plant design and cost estimates. This paper focuses on Air Liquide scope, i.e. the ASU and CO_2 unit.
Major economic and financial assumptions are presented in Table 1.

Capacity Factor	85%
Costs Year Constant US Dollars	2005 (January)
Illinois # 6 Delivered Cost	1.27 $\$/10^6$ Btu
Design/Construction Period	4 years
Plant Startup Date	2015 – 2020*
Land Unit Cost	$1,500 /acre
Project Book Life	20 years

Table 1: Major Economic and Financial Assumptions

* The ASU proposed in this study is designed and quoted using today's commercially available technology. Future improvements of ASU, leading to lower O_2 cost, are expected in 2015-2020 timeframe but have not been included in this study so far.

The assumed site location for each case is Midwestern, USA at 0 feet elevation, barometric pressure equal to 14.696 psia, ambient dry and wet bulb temperatures equal to 59°F and 51.5°F respectively, and relative humidity of 60%. Illinois No. 6 coal is used.

The environmental approach for the study is to evaluate each case on the same regulatory design basis, considering differences in technology. Based on EPA Green Book Non-attainment Area Map[6] relatively few areas in the Midwestern US are classified as "non-attainment". Thus, for the design scenarios considered in this study, environmental control equipment is defined to meet presumptive BACT (Best Available Control Technology) emission rates shown in Table 2.

Pollutant	Emission Limit	Control Technology
PM/PM10	0.015 $lb/10^6$ Btu	Bag House or ESP (99.5 - 99.8% efficiency)
SOx	0.1 $lb/10^6$ Btu	FGD (98% reduction)
NOx	0.07 $lb/10^6$ Btu	LNB/OFA/SCR for air combustion, LNB/OFO for oxy-fuel
Hg	90% removal	Activated Carbon Injection

Table 2: Presumptive BACT Values

Steam conditions[‡] for the Rankine cycle cases were selected based on the NETL Advanced Materials for Supercritical Boilers program. The goals of the program dictated the steam conditions selected for the study:

- For supercritical cycle cases - 3500psig/1110°F/1150°F
- For ultra-supercritical cases - 4000psig/1350°F/1400°F

[‡] The selected steam temperature of 1100°F for supercritical cases has become common in specifications for new plant design and several units have been recently built. The steam conditions for ultra supercritical cases (4000 psi/1300°F/1350°F) are currently under development and are expected to be available in the 2015 to 2020 timeframe.

Cases Studied

A summary of the different plant configurations considered in this study is presented in Table 3.

Case	Steam Cycle	Oxidant	Product CO_2	Product Purity
1	SCPCRef	Air		
2	USCPCRef	Air		
3	SCPC-OC	95 mol% O_2	Spec. A	Saline Formation
4	SCPC-OC	99 mol% O_2	Spec. B	Saline Formation
5	SCPC-OC	95 mol% O_2	Purify to meet Spec. B	Saline Formation
6	SCPC-OC	95 mol% O_2	Spec. C	EOR
7	USCPC-OC	95 mol% O_2	Spec. A	Saline Formation
8	USCPC-OC	95 mol% O_2	Spec. C	EOR

Table 3: Study Matrix

Note: All boilers are wall-fired PC. Oxygen is provided by cryogenic ASU in all OC cases.

LNB	Low NOx Burner	OFO	Overfire Oxygen
OFA	Overfire Air	FGR	Flue Gas Recirculation
SCR	Selective Catalytic Reduction	FGD	Flue Gas Desulfurization
PC	Pulverized Coal	EOR	Enhanced Oil Recovery
ASU	Air Separation Unit		

CO_2 Specification A - Flue gas composition exiting system with 95 mol% O_2 oxidant after drying to specified moisture content (Moisture<30 lb/10^6 cf CO_2).

CO_2 Specification B - Flue gas composition exiting system with 99 mol% O_2 oxidant after drying to specified moisture content (Moisture<30 lb/10^6 cf CO_2) or exiting system with 95 mol% O_2 oxidant after drying and purification to match 99 mol% case.

CO_2 Specification C – Flue gas purified to meet EOR spec: $CO_2 \geq 95\%$; N2 + O_2 < 5%; Moisture<30 lb/10^6 cf CO_2.

The study cases are selected based on the following logic:

Case	Purpose
1, 2	Establish two reference cases for comparison with OC technology. Case 1 is the reference case considered for SC-OC cases (3, 4, 5 and 6). Case 2 is the reference case for USC-OC cases (7 and 8). For those two reference cases, the necessary environmental control equipments to meet presumptive BACT emission rates are the same. They include: LNB + OFA + SCR for NOx emissions reduction, wet FGD for SOx emissions reduction, Activated Carbon Injection for mercury control and a fabric-filter for particulate control.
3	Establish minimum process & cost requirements for the oxy-coal system, when 95 mol.% O_2 is used and the CO_2 purity is not limited (CO_2 spec A) Establish NOx control system requirements. The regulatory limit for NOx aerial emissions rate assumed in this study is 0.07 lb/10^6 Btu. Projected NOx emission rate from the oxy-fuel combustion process is 0.1 lb/10^6Btu. Thus, a 30% NOx emission reduction is required. Some amount of NOx will be compressed to a supercritical fluid condition with the CO_2 for sequestration. The balance of NOx will be flashed to the atmosphere during the compression. The NOx release rate to the atmosphere should be established during the Case 6 evaluation. If the NOx release rate does not exceed regulatory limit, then no additional NOx reduction is required for all oxy-fuel cases. Otherwise, the required NOx reduction percentage will be established, and NOx emission control system (SCR or SNCR) will be assumed in the subsequent oxy-coal cases.

Case	Purpose
4	Establish minimum process & cost requirements for the oxy-coal system, when 99 mol% O_2 is used and higher CO_2 purity is required (CO_2 spec B).
5	Essentially Case 3 with the flue gas purification to match CO_2 quality in Case 4 (CO_2 spec B). Comparison of Cases 4 and 5 will provide the conclusion whether it is more economical to use higher purity O_2 or more extensive flue gas purification system
6	Provide the process & cost of purification to a more stringent CO_2 spec (Spec C for EOR application) with the most economical O_2 purity from the previous cases. This case should facilitate comparison with other studies modeled to meet product CO_2 quality for EOR application
7	Essentially Case 3 with ultra supercritical steam conditions, most economical O_2 purity from the previous cases, and CO_2 spec A.
8	Essentially Case 6 with ultra supercritical steam conditions, most economical O_2 purity from the previous cases, and CO_2 Spec. C for EOR application

OC Pulverized Coal Cases – Processes description

Steam Generator

The OC steam generation system description, process design and cost information are provided by the Babcock & Wilcox Company. The operation of an oxygen fired boiler with flue gas recirculation (FGR) is essentially the same as an air fired boiler with the exception that recycled flue gas takes the place of the primary and secondary air streams. All equipment remains the same except for the gas cooler/condenser and the gas reheater downstream of the FGD. This gas reheater heats the recycle gas by 10°F to 15°F to vaporize any water droplets and maintain gas temperature above the water saturation point before entering the fans. Environmental control equipments are the same for the reference cases and the OC cases except for NO_x emission control, volumes treated in the OC cases are however greatly reduced. The FGD and the fabric filter are anyway needed as protective equipments for the system. Flue gas composition does not change significantly between SC and USC cases.

Air Separation Unit

Air Separation Unit (ASU) system process design, description and cost information is based on Air Liquide specification[7]. The process design for all cases reported in this paper was performed utilizing commercially available cryogenic air separation systems producing oxygen at two different levels of oxygen purity: 99% mol. in Case 4 and 95% mol. in all other cases. For each design case ASU was arranged in 2 x 50% trains, with an approximate nominal capacity of 5,700 MT/D each for SCPC-OC and 4,900 MT/D each for USCPC-OC.

Oxygen is produced by the ASU through cryogenic distillation process. Atmospheric air is compressed, purified from impurities and then refrigerated. The refrigerated steam is passed into a two column distillation unit where the oxygen is produced. ASU is a broadly customizable product Large ASUs always need to be optimized to minimize the cost of ownership. In that regard, the value of power in $/kWe is a key parameter considered in the selection of ASU process. If the power is very expensive for the customer, the ASU will be designed to minimize the power consumption, at the expense of a higher capital. If a customer benefits from cheap electricity, the ASU capital will be minimized at the expense of higher power consumption. The ASU for this study has been optimized with assuming a relatively low value of power available.

Carbon Dioxide Purification/Compression

CO_2 unit system process design, description and cost information is based on American Air Liquide specification[8]. CO_2 unit specifications for study design cases are presented in Table 4.

Case	Steam Cycle	Oxidant	O_2 Flow (mt/d)	Product CO_2	Product Flow (mt/d)	CO_2 Purity, (minimum %)	CO_2 Recovery Efficiency
3	SCPC-OC	95 mol% O_2	11,400	Spec. A	15,140	88	100.0
4	SCPC-OC	99 mol% O_2	11,400	Spec. B	15,014	90	100.0
5	SCPC-OC	95 mol% O_2	11,400	Spec. B	14,408	90	97.9
6	SCPC-OC	95 mol% O_2	11,400	Spec. C	12,931	97	93.7
7	USCPC-OC	95 mol% O_2	9,800	Spec. A	13,075	88	100
8	USCPC-OC	95 mol% O_2	9,800	Spec. C	11,170	97	93.8

Table 4: Carbon Dioxide Compression/Purification Unit Specification

To meet the above specifications CO_2 units are arranged for case as shown in Table 5.

Case	Compression w/ Indirect Water Coolers and Drying Unit	Purification System
3	4 trains in parallel	None
4	4 trains in parallel	None
5	4 trains in parallel	Cold box, double-flash auto refrigeration system with bypass
6	4 trains in parallel	Cold box, double-flash auto refrigeration system
7	3 trains in parallel	None
8	3 trains in parallel	Cold box, double-flash auto refrigeration system

Table 5: Carbon Dioxide Compression/Purification Unit Scope by Case

Three different process options provide three CO_2 product specifications required in the study matrix: Specifications A, B and C (see page 5). Cases 3, 4 and 7 use the same process: cases 3 and 4 CO_2 units include four trains while case 7 includes three trains only. Cases 6 and 8 use the same process. Case 6 CO_2 unit includes four trains while case 8 includes three trains only. A third different process is used for case 5.

Compression/Drying system consists of LP (Low Pressure) and HP (High Pressure) sections, arranged upstream and downstream from the Drying Unit. The centrifugal compressors are driven by electric motors and include intercoolers between the compression stages. Dryer unit utilizes front end temperature swing adsorption – type (TSA) process – and consists of two radial flow bed vessels containing activated alumina adsorbents. Drying unit is regenerated by the stream of dry heated waste nitrogen from the ASU. The CO_2 purification system – when implemented – separates CO_2 from the inert gases and consists of two heat exchangers operating at different pressures and temperatures. The inert gases along with air pollutants (NOx, SOx, etc.) are vented to the atmosphere. Depending on the pollutant concentrations in the inert vent stream, appropriate pollutant removal system could be added if/as required. As demonstrated later in this paper, specified BACT presumptive emission rates were achieved without additional vent stream treatment.

For the cases where high CO_2 purity is not required or achieved by other means (3, 4, and 7), air pollutants such as NOx and SOx are removed in bulk and compressed with the CO_2 stream.

Cases 3, 4 and 7

The process design for cases 3 and 7 (Figure 2) is similar, and it assumes minimum product CO_2 purity of 88%. Case 3 employs a supercritical steam cycle, and case 7 ultra supercritical steam conditions. Supercritical Case 4 process achieves relatively higher product CO_2 purity by utilizing 99% mol. Oxygen instead of the 95% used in cases 3 and 7. In Cases 3, 4 and 7 air

pollutants and inert gases are removed in bulk with product CO_2, and no gas is vented to the atmosphere providing a 100% CO_2 capture.

To select one of the two ASU options (95% O_2 purity or 99% O_2 purity) in the OC technology, total capital and operating costs of ASU + CO_2 unit are compared. While using 95% or 99% O_2 purities, the flue gas flow rate to be treated, its composition and the CO_2 unit equipment do not change significantly. Hence, the savings (capital + power consumption) associated with the CO_2 unit by using 99% O_2 purity versus 95%, do not compensate for the significantly higher cost of 99% O_2 ASU versus 95% O_2 ASU. As a result, 95% O_2 purity ASU is selected as better option for obtaining the same CO_2 product specification (EOR).

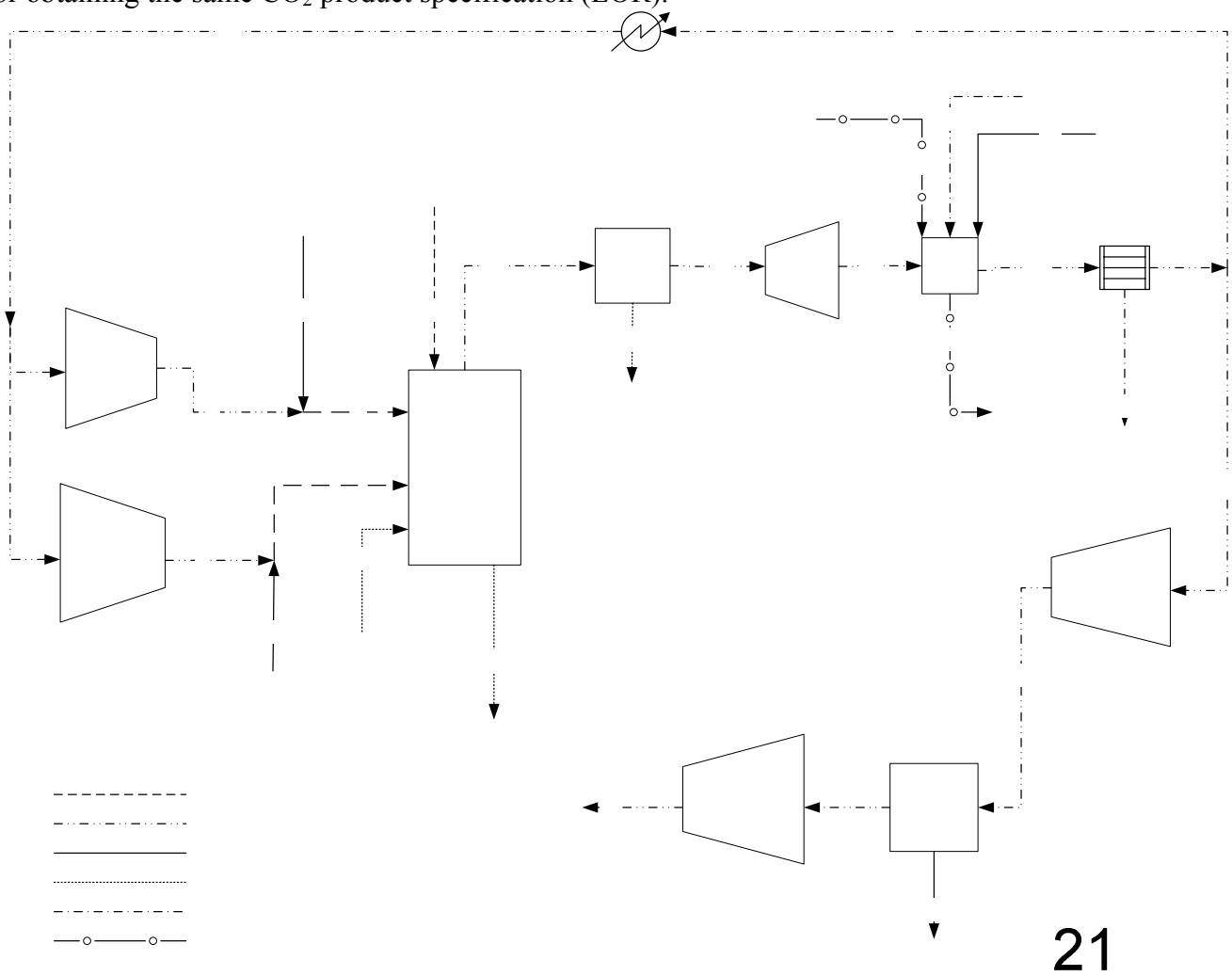

Figure 2: Process Flow Diagram for OC Cases 3, 4, and 7

Cases 5, 6 and 8

The process design for Cases 5, 6 and 8 (Figure 3) utilizes the tail flue gas purification system (cold box, double-flash auto refrigeration system) to meet specified product CO_2 purity. As a result, some of the gaseous CO_2 along with the pollutants is being vented into the atmosphere. However, in all three cases specified in the study 90% CO_2 capture is exceeded, and air emissions levels are met or exceeded.

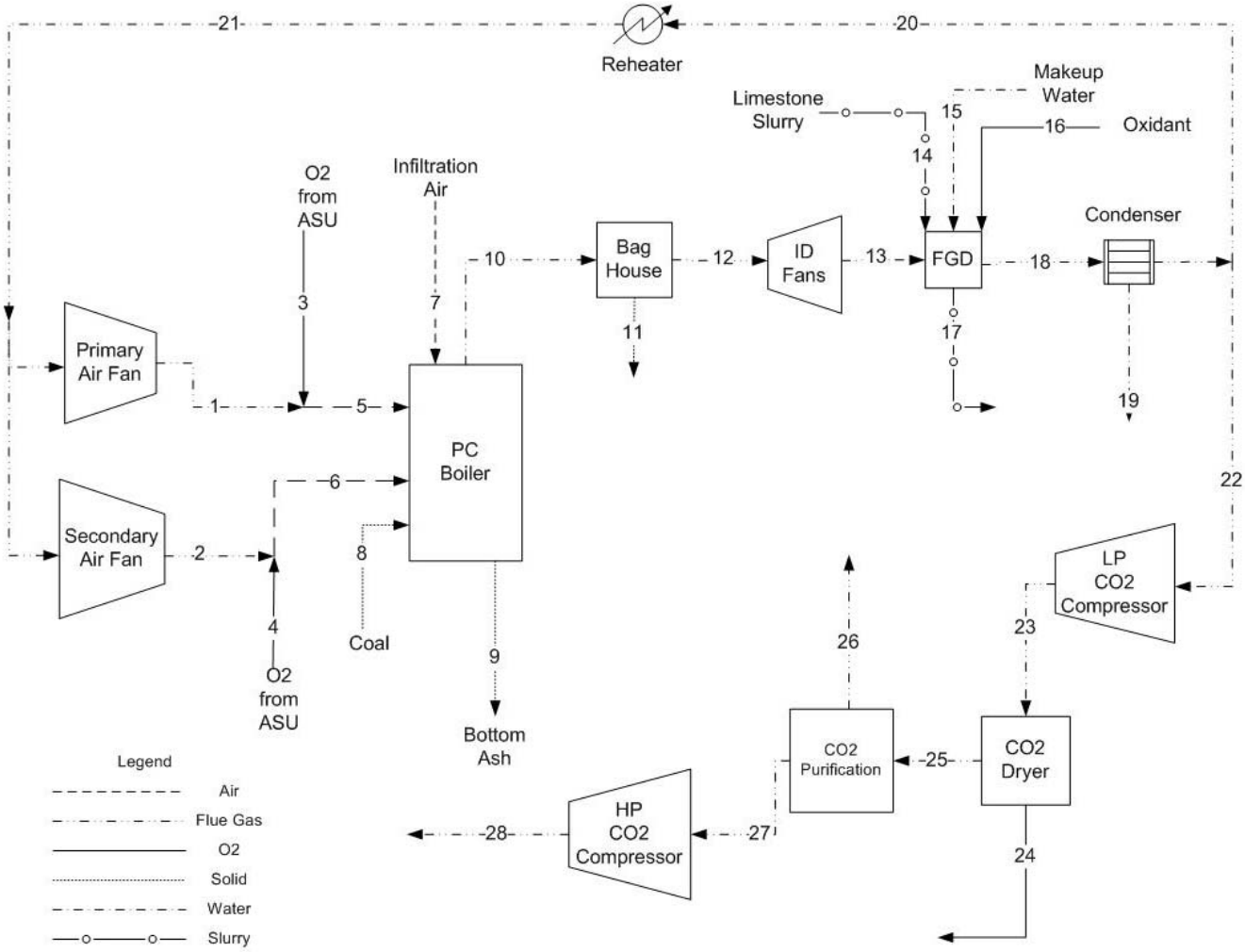

Figure 3: Process Flow Diagram for OC Cases 5, 6, and 8

Preliminary Results

The preliminary technical results of work completed to date are as follows:

- Conversion of air blown SC and USC designs to OC to facilitate carbon dioxide capture and sequestration resulted in net plant HHV efficiency penalty of 28% for supercritical designs (Cases 3 through 6) and 26% for ultra-supercritical designs (Cases 7 and 8).
- Presumptive BACT NO_x emission rates were met in all OC design cases without a post combustion NO_x control system.
- No air emissions were released in design cases modeled to meet CO_2 specification A (no specific CO_2 purity targeted), i.e. NO_x and SO_x were removed in bulk with the CO_2.
- Preliminary determination is made that the utilization of 95% mol. oxygen with tail flue gas treatment is more economical as compared to 99% mol. oxygen ASU, for the same CO_2 specification (Spec. C, EOR).
- Meeting more stringent EOR CO_2 specification C resulted in negligible penalty in net plant HHV efficiency compared to the design cases modeled to meet less stringent CO_2 Specifications A and B.

2. Engineering feasibility study to retrofit OC technology on a real 25 MW_e PC plant

An engineering feasibility study to retrofit PC-OC technology is in progress on an existing 25 MW_e PC unit. Functional analysis was performed with process heat and mass balances at various operating conditions, which provided the conditions and information of new equipment required. An ASU was custom designed satisfying the needs and specifics of the power plant. Boiler modifications and a wet scrubber for SO_2 removal were also designed. The schematic of the power plant on which the engineering study is being performed is shown in Figure 4. No technical showstoppers were observed. Costs are being refined at this point of time.

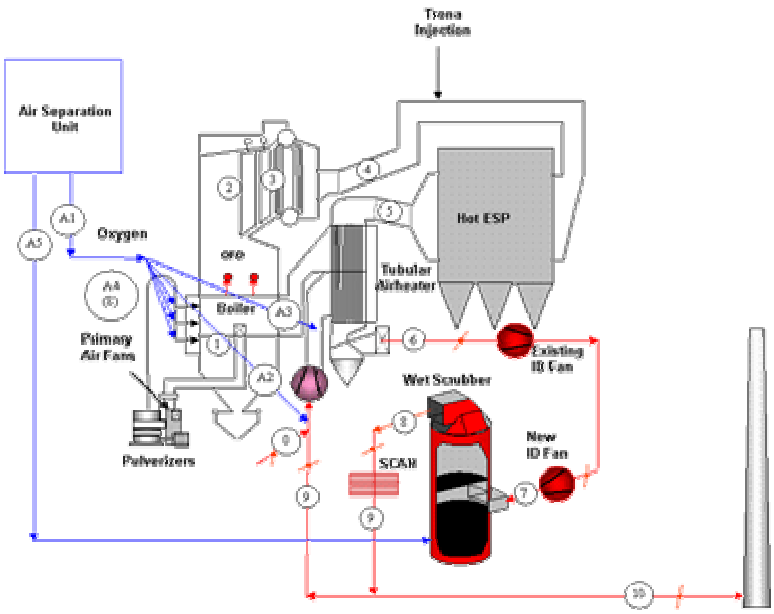

Figure 4. Schematic of the 25 MWe engineering study plant

Conclusions

Detailed system analyses are being performed on PC units with supercritical and ultra-supercritical steam cycles. A 25 MWe plant was selected and a detailed engineering study to retrofit the unit with OC was performed. No technical showstoppers were identified for retrofitting the plant. Detailed results and conclusions associated with the engineering cost assessment of 550 MW_e net SC and USC OC plants and OC retrofit on an existing 25 MW_e PC plant will be provided at future conference.

Acknowledgement and Disclaimer
This paper was prepared with the support of the US Department of Energy (DOE), under Award NO. DE-FC26-02NT41586. However, any opinions, findings, conclusions, or recommendations expressed herein are those of the authors and do not necessarily reflect the views of the DOE. The content of this paper is for informational and educational purposes only and should not be construed as providing professional engineering services or financial advice.

The authors would like to acknowledge Department of Energy (DOE) for funding this project and the following organizations and personnel involved in performing these studies:

Air Liquide Process and Construction: Denis Cote, Frederic Judas
(RDS)Parsons Corporation: Pamela Capicotto
WorleyParsons Group, Inc: Vladimir Vaysman

References

[1] The role of coal as an energy source, publication of World Coal Institute, London, UK.

[2] Farzan, H., Vecci, S.J., Chatel-Pelage, F., Pranda, P., Bose, A.C., Pilot-Scale Evaluation of Coal Combustion in an Oxygen-Enriched Recycled Flue Gas, The 22nd International Pittsburgh Coal Conference, Pittsburgh, PA, September 12-15, 2005.

[3] Varagani, R. K., Chatel-Pelage, F., Pranda, P., Rostam-Abadi, M., Lu, Y., Bose, A. C., Performance Simulation and Cost Assessment of Oxy-Combustion Process for CO2 Capture from Coal-Fired Power Plants, Fourth Annual Conference on Carbon Sequestration, Alexandria, VA, May 2-5 2005.

[4] Office of Fossil Energy, US DOE, Market Based Advanced Coal Power Systems, DOE/FE-0400, May 1999.

[5] Gilbert/Commonwealth Inc., Clean Coal Reference Plants: Pulverized Coal Boiler with Flue Gas Desulfurization, DE-AM21-94MC311 66, 1995.

[6] US EPA Green Book Non-attainment Area Map, http://www.epa.gov/oar/oaqps/greenbk/mapnpoll.html

[7] Technical Specification and Cost Estimates, ALPC Reference No. 30258, Revision 1, American Air Liquide, Oxy-combustion Technology for CO_2 Capture in Pulverized Coal-Fired Boilers – DOE Project task 7, 13,745 MT/D Air Separation Unit, February 10, 2006.

[8] Technical Specification and Cost Estimates, Revision 1, American Air Liquide, Oxy-combustion Technology for CO_2 Capture in Pulverized Coal-Fired Boilers – DOE Project task 7, CO_2 Compression and Purification Unit, February 16, 2006.