Hydrogen Membrane Selection for a Water Gas Shift Reactor
Second Conference on Carbon Sequestration
Arlington, VA – May 5-7, 2003

Cliff Lowe (ChevronTexaco Energy Research and Technology Company);
Valerie Francuz, Clare Behrens (Fluor)

1 Summary

The CO_2 Capture Project with the support from the US Department of Energy sponsored a study to develop and test four types of hydrogen transfer membranes for incorporation into a sulfur-tolerant membrane water gas shift (MWGS) reactor operating with sour synthesis gas. The goals of the project were to demonstrate a proof-of-concept MWGS reactor and to determine the CO_2 capture cost savings.

The four membrane types were initially tested with pure component mixtures of hydrogen and inert gases (no H_2S). Three out of the four membranes failed to demonstrate sufficient H_2:CO_2 selectivity to meet the target requirements on carbon recovery. The fourth membrane achieved infinite H_2:CO_2 selectivity, but when this membrane was subjected to sour syngas, the hydrogen permeance drastically decreased.

2 Background - CO_2 Capture Project

The CO_2 Capture Project (CCP) is an international effort funded by eight of the world's leading energy companies. This project intends to address the issue of reducing emissions in a manner that will contribute to an environmentally acceptable and competitively priced continuous energy supply for the world. The CO_2 Capture Project:

- Aims to reduce the cost of CO_2 capture from combustion sources.
- Is developing methods for safely storing CO_2 underground.
- Is working together with governments, non-government organizations, and other stakeholders to deliver technology that is cost-effective and meets the needs of society.

The project is studying three routes for CO_2 capture, as well as the sequestration of CO_2. The three areas of CO_2 capture are:

- Post-Combustion Scrubbing - CO_2 is removed from the exhaust gas from furnaces, boilers, gas turbines, etc. This technology is commercially proven and can be retrofitted to existing equipment.
- Oxyfuel - Oxygen is separated from air and then used to combust hydrocarbons to produce an exhaust containing CO_2 and water (no nitrogen). The H_2O can be easily condensed, leaving a highly concentrated CO_2 stream for storage.
- Pre-Combustion Decarbonization (PCDC) – A description is provided in Section 3.

The Membrane Water Gas Shift study is part of a wide range of PCDC research and development projects and engineering studies that is sponsored by the CO_2 Capture Project.

3 Basic PCDC process

The basic concept for pre-combustion decarbonization is shown in Figure 1. Hydrocarbon-based gas, liquid or solids are converted into synthesis gas or syngas (primarily CO and hydrogen) in a reformer or partial combustion unit. The CO and H_2O are further converted into CO_2 and H_2 in one or two reactors via the equilibrium-limited water gas shift reaction.

$$CO + H_2O \leftrightarrow H_2 + CO_2$$

The CO_2 is recovered by a solvent absorption system and is then compressed from near atmospheric pressure to the elevated pressures required for underground storage. The hydrogen fuel is available for use in boilers, furnaces, fuel cells, and gas turbines.

The focus of the MWGS study is to develop a system which will combine the shift reaction and CO_2 removal process steps.

4 Membrane Water Gas Shift study

4.1 MWGS reactor concept

The MWGS concept is to place a hydrogen transfer membrane inside of a water gas shift reactor. Hydrogen in the syngas as well as the hydrogen that is produced via the WGS reaction will permeate through the membrane allowing the shift reaction to move further toward the desired product, H_2. The retentate stream consists primarily of CO_2, non-recovered H_2, and some water. The end result is separate H_2-rich and CO_2-rich streams.

For CO_2 capture and sequestration purposes, a clear advantage of this concept is that the CO_2-rich retentate stream is maintained at near syngas generation pressures (~35 barg). This results in lower sequestration compression costs.

Another advantage of this particular MWGS concept is that it is targeted to accept sour syngas feed streams.

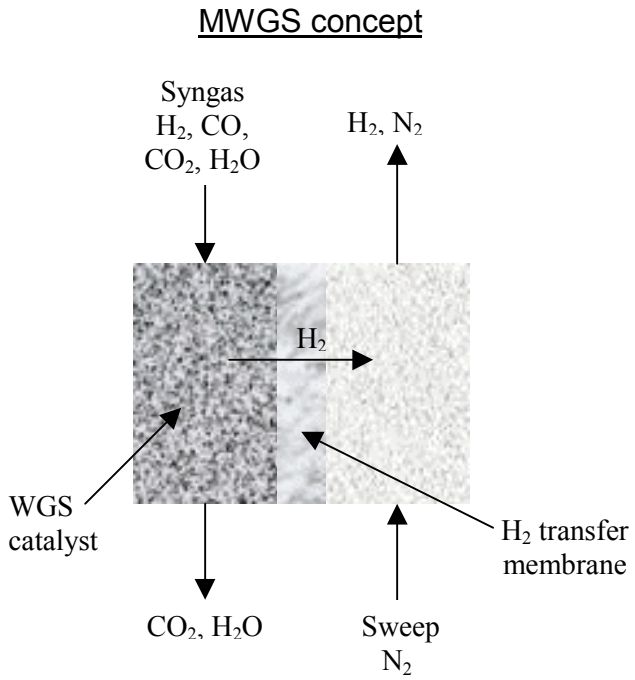

4.2 Scenarios

The CCP has chosen to evaluate CO_2 capture technologies in four different scenarios. In this way, technologies are evaluated under "real" conditions and the capability of a technology to handle a variety of situations/conditions can be identified.

- Norcap – A natural gas fired 400 MW combined cycle power plant
- Alaska – Multiple, distributed simple cycle gas turbines driving process compressors
- Canadian tarsands complex – Petroleum coke gasifier supplying hydrogen, steam and power
- European refinery – Multiple furnaces and boilers fired with fuel gas, natural gas, and/or sulfur containing fuel oil

The MWGS reactor concept will be evaluated for the European refinery scenario. The primary fuel source will be sulfur-containing fuel oil, with supplementary fuel gas and natural gas utilized as required. The MWGS concept fits especially well in the European refinery scenario because the boilers and furnaces can accept a low pressure fuel source, such as the MWGS hydrogen permeate stream.

4.3 Study objectives/work plan

The overall objective of the study is 1) to provide a proof-of-concept MWGS reactor and 2) to estimate the avoided CO_2 capture costs in a process incorporating a MWGS reactor.

The study was divided into two phases. In Phase I (3/02-2/03), the following tasks were undertaken.

- Development and testing of hydrogen transfer membranes in a sour syngas environment
- Development of a computer simulation model of the membrane water gas shift reactor
- Development of a computer simulation model of a CO_2 capture plant based on MWGS technology
- Evaluation of the performance of each type of membrane in a CO_2 capture environment

In Phase II (eight months), the following tasks are planned.

- Testing a lab scale membrane water gas shift reactor
- Development of equipment specifications for the CO_2 capture plant
- Design and cost estimate of a commercial scale membrane water gas shift reactor

The deliverables from the last two items will be submitted to a CCP cost estimator. The cost estimator will provide opex and capex estimators that will be consistent for all capture technologies that are being considered by the CCP. Cost estimation is not part of the MWGS study.

4.4 Four membrane types

In July of 2001, it was decided to develop and test four types of membranes in Phase I.

Membrane type	Promising attributes	Initial concerns
Microporous silica	Sulfur tolerance, low cost	Selectivity, permeance, moisture resistance
Zeolite	Sulfur tolerance, low cost	Selectivity, permeance
Proton-conducting ceramic-metal composites	High to infinite H_2:CO_2 selectivity	Long term option, requires cermet selection/development, permeance, sulfur resistance
Palladium alloy	High to infinite H_2:CO_2 selectivity, sulfur tolerance	Thin film fabricability, permeance, sulfur resistance, costs

The development and testing of the membranes were conducted by four different teams of organizations/universities. The initial focus of the work was to develop membranes that showed sufficient promise in the areas of permeance, selectivity, and costs. Hydrogen flux tests were conducted using single and binary gases at various temperatures and pressures. Leakage due to membrane imperfections and/or seal leaks were identified by measuring the permeation of non-hydrogen components.

The CO_2 capture plant simulation model (discussed below) was then used to provide a status report for each of the membrane development teams. The reports provided an early indication on whether or not the demonstrated selectivities were sufficient to meet the project constraints and goals.

Following the initial tests, each membrane developer conducted flux tests using a prescribed syngas composition, containing water and H_2S. No WGS catalyst was present in the above tests.

4.5 Membrane water gas shift reactor simulation model

A computer model of the membrane water gas shift reactor was developed to evaluate the performance of the individual membrane types. The key features of the model are:

- For each membrane type, specific permeation rate equations are used to estimate component fluxes.
- The membrane area is adjustable
- The ratio between the volume of water gas shift catalyst and the membrane area is adjustable

- The sweep gas flowrate is adjustable

For all membranes, the following hydrogen permeance equation is used in the model.

$$J = P_0 e^{-E/RT}\left(P_f^{\ n} - P_p^{\ n}\right)$$

where	J	flux of hydrogen
	P	partial pressure component H_2 on the feed (f) and permeate (p) side
	P_0	Pre-exponential permeance factor
	E	activation energy
	n	exponent on driving force

The expected temperature levels for the MWGS reactor makes this equation suitable for the ceramic-metal composite membrane with n=0.5. For the other three membranes, n=1. (See section 5.1)

Similar equations were developed for other components.

The membrane reactor model was then integrated into the CO_2 capture plant model described below.

4.6 CO_2 capture plant simulation model

The flow scheme for the capture model is shown in Figure 2.

Fuel oil and fuel gas are fed to an oxygen-blown gasifier to produce syngas. The gas is then sent to a bulk high temperature shift reactor where about 85% of the shift reaction takes place. The remaining portion of the reaction takes place in the MWGS reactor. The hydrogen permeate is sent to the refinery furnaces and boilers, while the CO_2-rich retentate is cooled and then sent to a H_2S removal unit. The sweet CO_2 is then compressed and sent to sequestration.

The requirement for H_2S removal prior to CO_2 sequestration is site-specific and will depend on the reservoir and the pipeline requirements.

The electrical power and steam required by the gasification plant are supplied by a natural gas fired combined cycle system.

4.6.1 Constraints and goals

The CCP established two constraints for the European refinery scenario. The low heating value of the fuel sent to the heaters and boilers must be above 150 Btu/scf in order to maintain a stable flame. The second constraint is that the gas sent to sequestration must be over 90% CO_2 on a dry basis.

If these constraints are met, the goals were to recover greater than 90% of the carbon entering the CO_2 capture plant, and to extract over 90% of the hydrogen.

5 Results

5.1 Syngas permeation test results

The syngas permeation tests mentioned in section 4.4 were conducted at three retentate-side pressures (5, 10, and 15 barg) with the permeate-side pressure maintained at 0 barg. Tests were conducted at three temperatures (250°C, 350°C and 450°C).

Data reduction techniques were then used to take the results from these tests and to determine the coefficients for the flux equations shown in section 4.5. These coefficients were inputted into the model for each membrane type. Steam and nitrogen from the air separation plant were used as sweep gases to improve the permeance driving force.

For the zeolite membrane, the demonstrated selectivity was so low that the CO_2 purity specification of 90% and the carbon recovery goal could not be reached. In addition, the palladium alloy and the silica membranes fell far short of the target carbon recovery of 90% due

to poor H_2:CO_2 permselectivities. Parametric studies using the membrane model showed that a H_2:CO_2 permselectivity of over 50 is required to meet the purity and carbon recovery targets.

It was initially expected that the palladium alloy membrane would have a H_2:CO_2 permselectivity approaching infinity. Unfortunately, defects in the film and/or in the seals reduced the performance considerably. The driving force exponent for hydrogen in the flux equation shown in section 4.5 approached 1.0.

As the ceramic-metal composite membrane provides "infinite" selectivity between H_2 and CO_2, this membrane was able to meet the purity constraints and the carbon recovery target. It is important to note, however, that the flux performance of this membrane was severely reduced by the presence of H_2S. Table 1 shows the performance of this membrane in both sweet and sour syngas conditions.

Table 1 shows the estimated membrane performance at the "optimized" condition for each of the membrane types.

6 Conclusions from Phase I

- The 12 month time frame for Phase I was extremely challenging for developing and testing hydrogen transfer membranes for sour MWGS service.
- Obtaining an adequate selectivity between hydrogen and carbon dioxide is as important as obtaining adequate hydrogen permeation performance. H_2:CO_2 permselectivities of over 50 are required to obtain adequate carbon recovery.
- H_2S can severely reduce the performance of palladium alloy and cermet membranes.
- Based on our process simulation work and preliminary cost analysis, the concept of the membrane water gas shift reactor still shows promise for reducing the CO_2 avoided capture costs.

7 Phase II status

Based on the Phase I results, it was decided to modify the Phase II tasks that were summarized in section 4.3. The following work scope was proposed to the Executive Board of the CCP for approval.

- The process flow scheme will be modified so that H_2S is removed upstream of the water gas shift section of the plant. This change will provide H_2S-free syngas to the MWGS reactor. The process design will be based on the cermet membrane. Process flow diagrams, heat and material balances and equipment specifications are the deliverables. This work will be transmitted to a CCP cost estimator, who will determine the cost of the capture plant and determine the cost of CO_2 capture with MWGS technology.
- The effort to develop a lab-scale, proof-of-concept MWGS reactor will be based on the cermet membrane because it was the only membrane that demonstrated adequate selectivity.
- The preliminary design of a commercial scale MWGS reactor will be based on the Phase I results from the cermet membrane.

8 Acknowledgements

The authors would like express their appreciation for the support of David Hyman, the DOE Project Officer on the "CO_2 Capture Project: An Integrated, Collaborative Technology Development Project for Next Generation CO_2 Separation, Capture and Geologic Storage".

This paper was prepared with the support of the US Department of Energy, under Award No. DE-FC26-01NT41145, and any opinions, findings, conclusions or recommendations expressed herein are those of the author(s) and do not necessarily reflect the views of the DOE.

Figure 1 – Basic Pre-combustion Decarbonization Flow Scheme

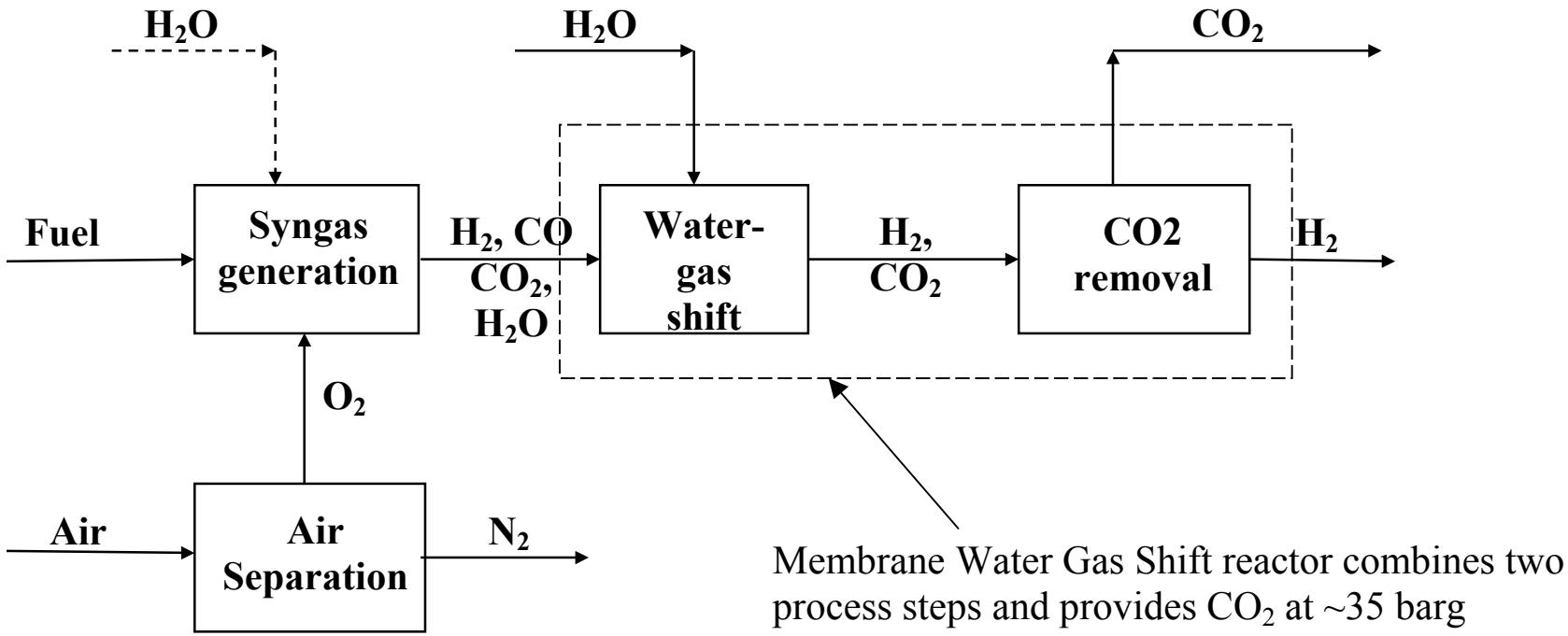

Figure 2 – CO_2 Capture Plant Process Scheme

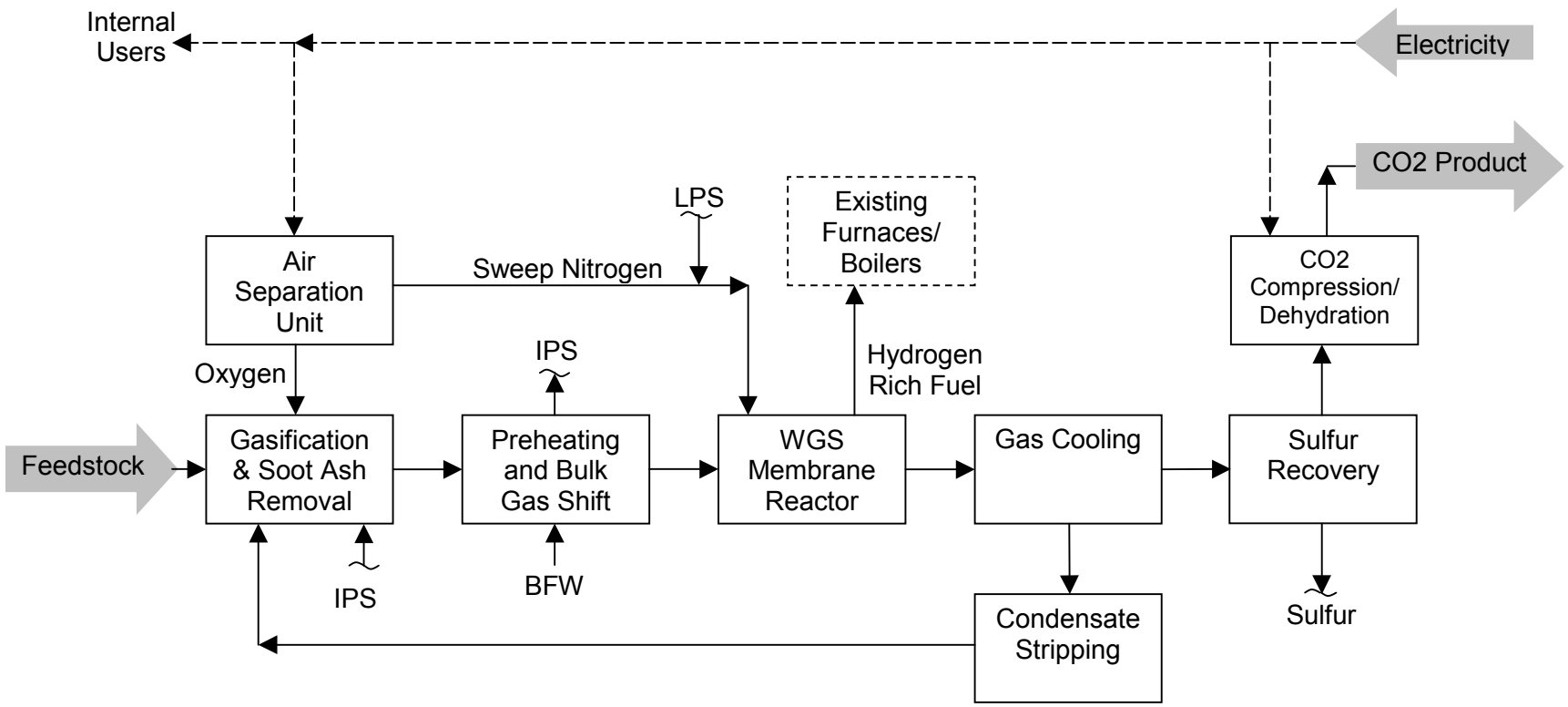

Abbreviations:

BFW – Boiler Feedwater
IPS – Intermediate Pressure Steam
LPS – Low Pressure Steam
WGS – Water Gas Shift

Table 1 – Comparison of Membrane Performance

Membrane Vendor/Type	Silica	Cer-met (no H2S)	Cer-met	Pd-Alloy	Zeolite
Overall Gasification Plant Performance					
Gasifier feed (41% fuel oil/59% refinery fuel gas), MMBtu/hr (LHV)	3605.2	3605.2	3605.2	3605.2	3605.2
Natural gas required (for power generation in gas turbine), MMBtu/hr	716.5	716.5	716.5	716.5	716.5
Total feed plus fuel, MMBtu/hr (LHV)	4321.7	4321.7	4321.7	4321.7	4321.7
Syngas to MWGS reactor, MMSCFD	527.8	527.8	527.8	527.8	527.8
Hydrogen fuel (return to existing boilers), MMBtu/hr (LHV)	2799.3	2654.6	2652.4	2743.5	2776.4
Overall thermal efficiency	65%	61%	61%	63%	64%
CO2 to sequestration, MMtonnes/yr (90% SF)	0.46	2.02	2.01	0.92	0.25
Water Gas Shift Membrane Performance					
Syngas feed temperature, C	315	315	450	350	315
Syngas feed pressure, barg	34	34	34	34	34
Sweep gas pressure, barg	2	2	2	2	2
Carbon recovery,%	23.0	100.0	100.0	45.6	12.4
CO2 purity, dry %	90.9	90.2	90.0	90.0	86.6
Hydrogen recovery, %	94.7	95.3	95.2	97.8	98.9
Hydrogen LHV, Btu/SCF (Note 1)	150.3	149.7	149.8	150.7	150.1
Hydrogen purity, % (Note 2)	51.7	54.7	54.7	54.6	54.4
Permeate H2, kmol/hr	11511.0	11582.9	11582.4	11883.7	12023.3
H2 flux, mol/m2-sec	0.19	0.19	0.08	0.15	0.17
H2:CO2 permselectivity at feed conditions	4.7	infinite	infinite	5.5	2.6 (Note 3)
Membrane area required, m2	16,500	17,325	39,000	21,500	19,400
Nitrogen sweep gas required, kgmol/hr	5,900	9,100	9,100	5,000	4,500
Steam sweep gas required, kgmol/hr	20,000	8,800	20,000	20,000	8,000

(1) Cooling of fuel to 35C was required to meet LHV requirement
(2) H2 Purity after water condensation
(3) Permeance at 10 bar